Compal confidential

IGL50/51 Schematics Document

Mobile Yonah uFCPGA with Intel Calistoga_GM/PM+ICH7-M core logic

2006-05-15

REV:0.1

Security Classification	Compal Secret Data		
Issued Date	2005/03/10	Deciphered Date	2006/03/10

THIS SHEET OF ENGINEERING DRAWING IS THE PROPRIETARY PROPERTY OF COMPAL ELECTRONICS, INC. AND CONTAINS CONFIDENTIAL AND TRADE SECRET INFORMATION. THIS SHEET MAY NOT BE TRANSFERED FROM THE CUSTODY OF THE COMPETENT DIVISION OF R&D DEPARTMENT EXCEPT AS AUTHORIZED BY COMPAL ELECTRONICS, INC. NEITHER THIS SHEET NOR THE INFORMATION IT CONTAINS MAY BE USED BY OR DISCLOSED TO ANY THIRD PARTY WITHOUT PRIOR WRITTEN CONSENT OF COMPAL ELECTRONICS, INC.

Compal Electronics, Inc.

Title: *Cover Sheet*

Size: Custom | Document Number: *IGL50/51 LA-3771* | Rev: 0.1

Date: 星期四, 六月 08, 2006 | Sheet 1 of 48

Compal confidential

File Name : LA-3061

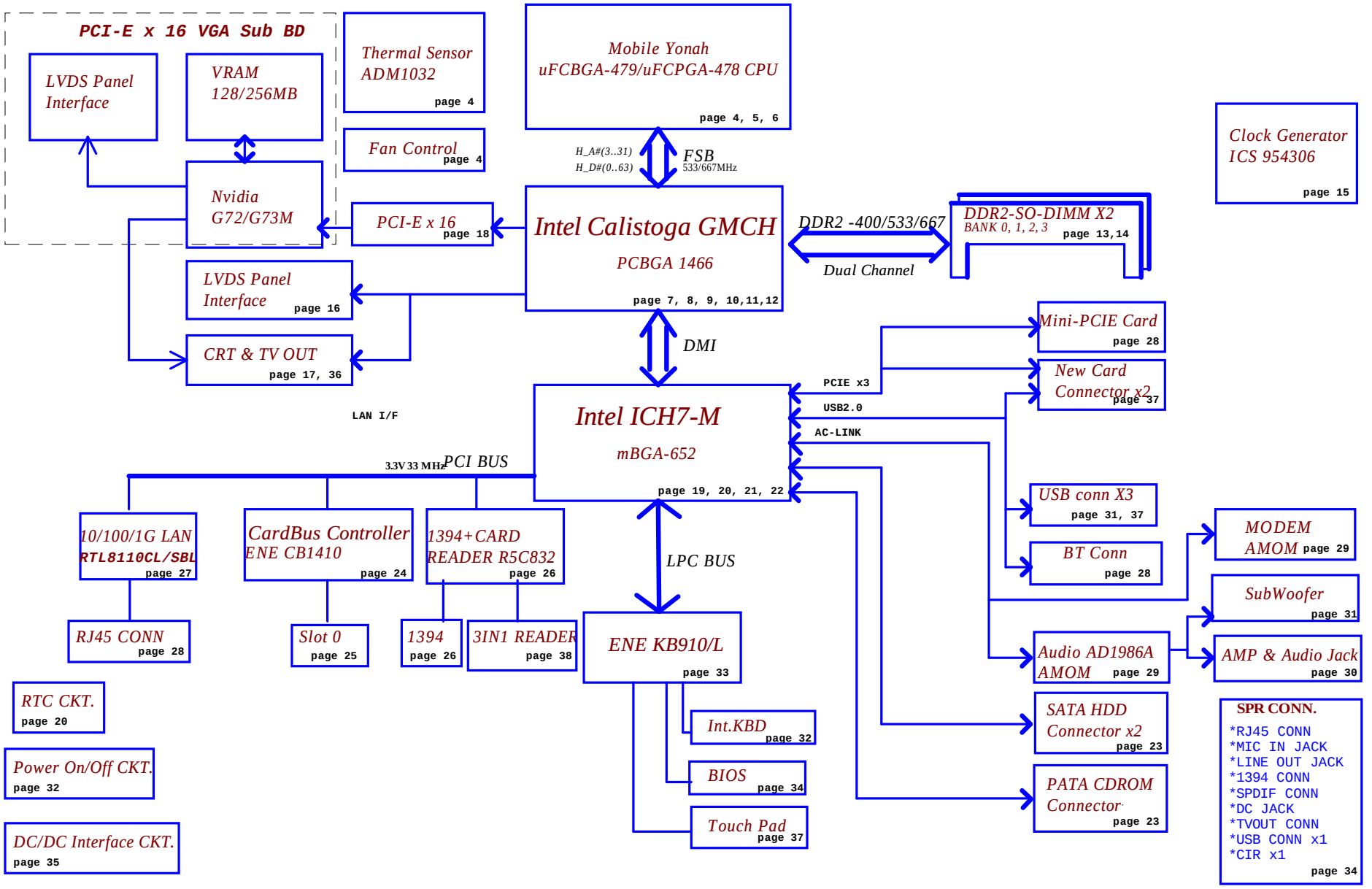

Security Classification	Compal Secret Data		
Issued Date	2005/03/10	Deciphered Date	2006/03/10

THIS SHEET OF ENGINEERING DRAWING IS THE PROPRIETARY PROPERTY OF COMPAL ELECTRONICS, INC. AND CONTAINS CONFIDENTIAL AND TRADE SECRET INFORMATION. THIS SHEET MAY NOT BE TRANSFERED FROM THE CUSTODY OF THE COMPETENT DIVISION OF R&D DEPARTMENT EXCEPT AS AUTHORIZED BY COMPAL ELECTRONICS, INC. NEITHER THIS SHEET NOR THE INFORMATION IT CONTAINS MAY BE USED BY OR DISCLOSED TO ANY THIRD PARTY WITHOUT PRIOR WRITTEN CONSENT OF COMPAL ELECTRONICS, INC.

Compal Electronics, Inc.

Title: **Block Diagram**

Size	Document Number	Rev
Custom	IGL50/51 LA-3771	0.1

Date: 星期四, 六月 08, 2006 Sheet 2 of 48

Power Block Diagram Of The IMVP6

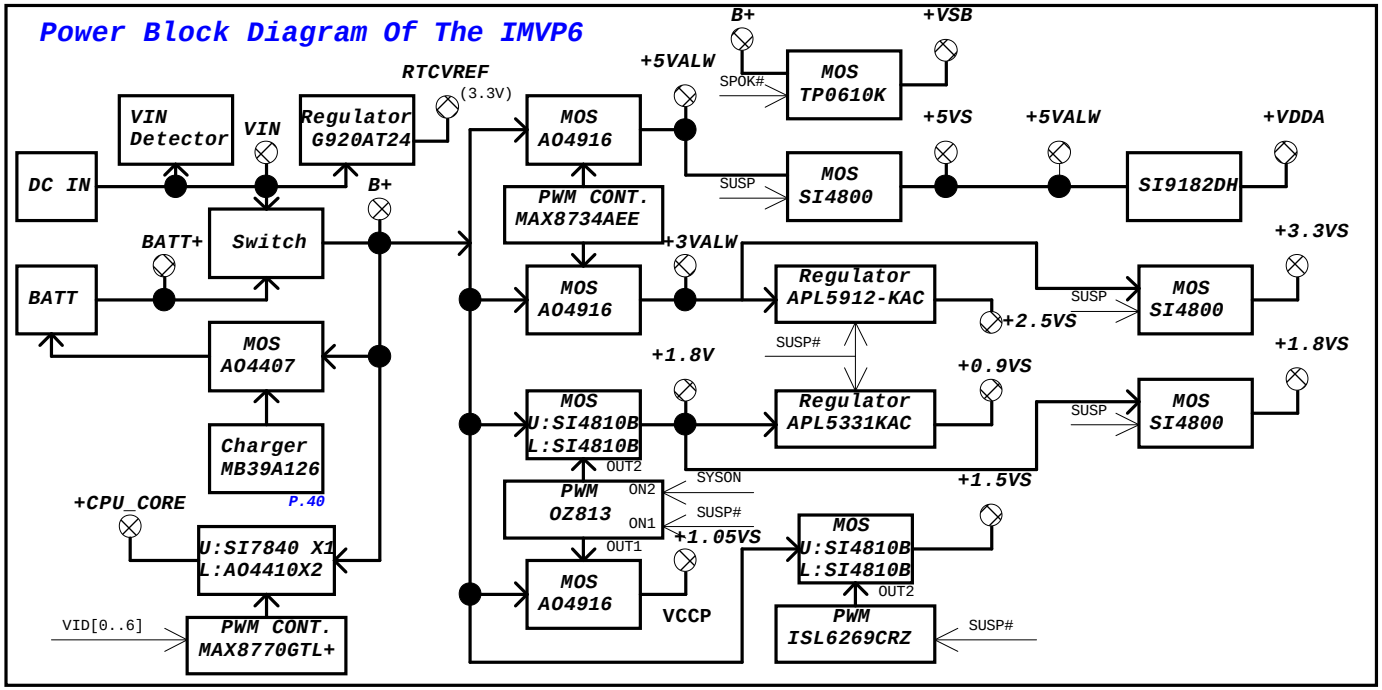

+3VALW	KB910L SB RTL8110SBL/CL	mA 160mA
+CPU_CORE	CPU	36A
+VCCP	CPU NB	2.5A 9.8A (14.7A)
+5VS	EXPRESS CARD HDD ODD MDC APA2066 TPA0211 AD1986 USB PORT * 6	1A 1.5A 1.8A 300mA 1A mA 70mA 3A
+3VS	NB EXPRESS CARD CLK_GEN LCDVCC VGA CARD (G7XM) SB R5C832 BIOS ROM KB910L CB1410	480mA 1A 200mA 1A 655mA 680mA mA 15mA 200mA mA
+2.5VS	VGA CARD (G7XM) NB	130mA (143mA)
+1.8V	DDR2_DIMM NB (667Mhz)	8A 3.1A
+1.8VS	GDDR2 VGA CARD (G7XM)	6A 4.06A
+0.9VREF	DDR2_DIMM	10mA
+0.9VS	GDDR2 DDR2_DIMM	1A 2A
+1.5V	SB	40mA
+1.5VS	NB SB MiniCard EXPRESS CARD VGA CARD (G7XM)	8.9A(13.8A) 3.8A 1A 0.65A 2A

PCI DEVICES

EXTERNAL	IDSEL#	REQ/GNT#	PIRQ
CARD BUS CB1410	AD20	2	PCI_PIRQA#
CARD READER & 1394 R5C832	AD22	0	PCI_PIRQG# PCI_PIRQH#
LAN CONTROLLER RTL8110SBL/CL	AD17	3	PCI_PIRQF#

PCIE LANE

LANE	DEVICE
1	Express Card
2	Mini Card

USB

PORT	DEVICE
0	LEFT SIDE
1	BLUE TOOTH
2	RIGHT SIDE
3	JP810
4	RIGHT SIDE
5	CMOS
6	RIGHT SIDE

I2C / SMB Address

DEVICE	ADDRESS R/W	
KB910/L (SM1-Pulled-Up 5V)		
AT24C16AN	A3/A2 H	
SMART BATTERY	17/16 H	
KB910/L (SM2-Pulled-Up 3.3V)		
ADM1032AR	99/98 H	
G7xM (I2CC-Pulled-Up 3.3V)		
G781-1 (RESERVED)	9B/9A	
ICH7M SM Bus		
ICS9LPR325AKLFT	D3/D2 H	(3.3V)
DDR II DIMM0	A1/A0 H	(3.3V)
DDR II DIMM1	A3/A2 H	(3.3V)
Express Card	NC	(2.5V)
Mini-Express	NC	(2.5V)

BOM Structure

MARK	FUNCTION
@	NC FOR ALL
EXP@	PCIE-NEW CARD
BT@	BLUE TOOTH
UMA@	Internal 945GM
VGA@	External G7xM
SUBWOOFER@	SUBWOOFER
HGT30@	HGT30
CB@	PCMCIA/CARD BUS
GIGA@	8110SBL(SCL)Giga LAN
10/100@	8110CL 10/100Mb LAN

Voltage Rails

O MEANS ON
X MEANS OFF

State S4 : STD S5 : SOFT OFF \ power plane	+B LDO3 LDO5	+5VALW +3VALW	+1.8V +5V	+5VS +3VS +2.5VS +1.8VS +1.5VS +VGA_CORE +1.2VS +0.9VS +CPU_CORE +VCCP
S0	O	O	O	O
S1	O	O	O	O
S3 : STR	O	O	O	X
S5 S4/AC	O	O	X	X
S5 S4/ Battery only	O	X	X	X
S5 S4/AC & Battery don't exist	X	X	X	X

MB_ID

MB ID	P NAME
0	IGL-50
1	IGL-51

BRD_ID

R119(Ra)=100K Ohm

ID	MB REV#	R115(Rb)	Vab
0	R0.1 (EVT)	0	0V
1	R0.2 (DVT)	8.2K	0.25V
2	R0.3 (PVT)	18K	0.50V
3	R1.0 (MP)	33K	0.82V
4		56K	1.19V
5		100K	1.65V
6		200K	2.20V
7		NC	3.30V

Security Classification	Compal Secret Data		
Issued Date	2005/03/10	Deciphered Date	2006/03/10

THIS SHEET OF ENGINEERING DRAWING IS THE PROPRIETARY PROPERTY OF COMPAL ELECTRONICS, INC. AND CONTAINS CONFIDENTIAL AND TRADE SECRET INFORMATION. THIS SHEET MAY NOT BE TRANSFERED FROM THE CUSTODY OF THE COMPETENT DIVISION OF R&D DEPARTMENT EXCEPT AS AUTHORIZED BY COMPAL ELECTRONICS, INC. NEITHER THIS SHEET NOR THE INFORMATION IT CONTAINS MAY BE USED BY OR DISCLOSED TO ANY THIRD PARTY WITHOUT PRIOR WRITTEN CONSENT OF COMPAL ELECTRONICS, INC.

Compal Electronics, Inc.

Title: Notes List

Size: Custom | Document Number: IGL50/51 LA-3771 | Rev: 0.1

Date: 星期四, 六月 08, 2006 | Sheet 3 of 48

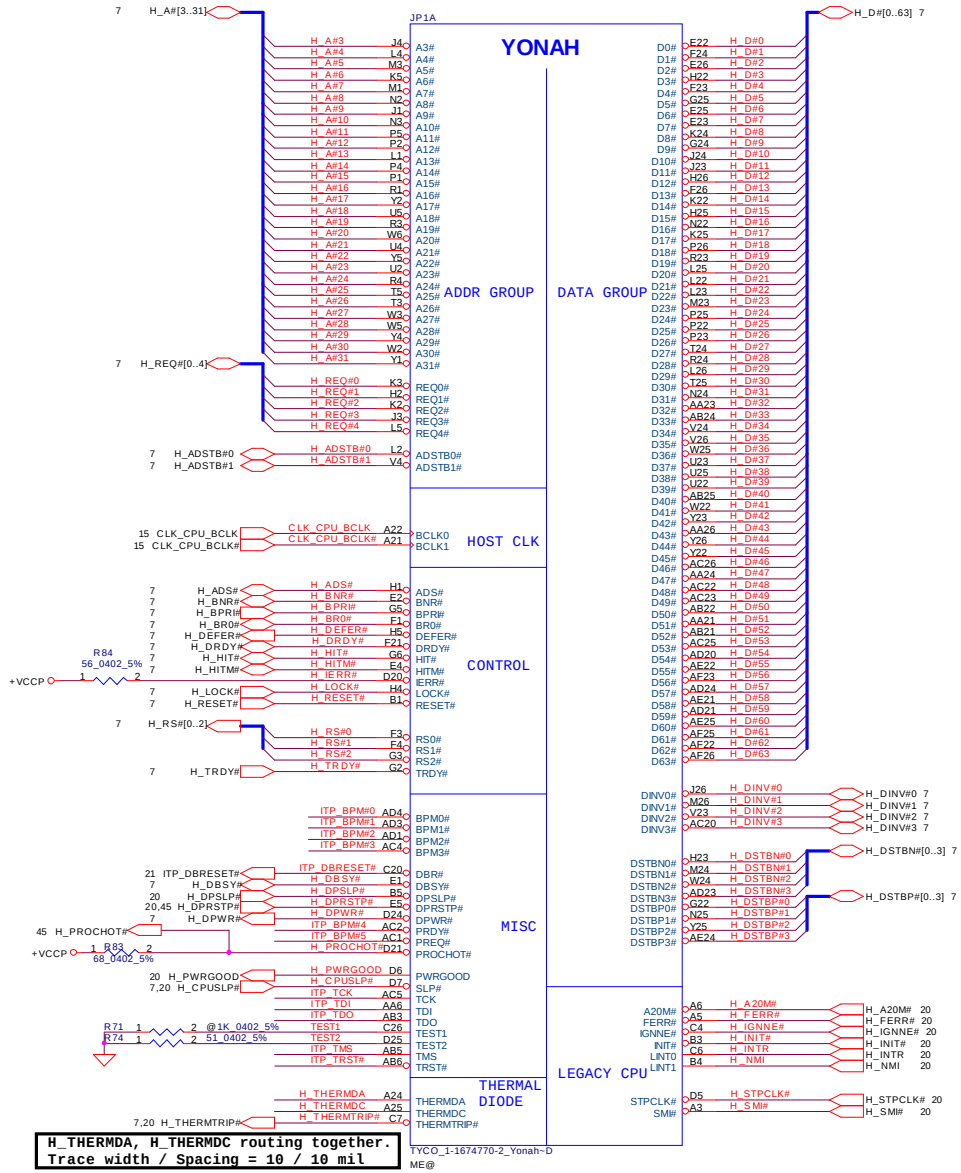

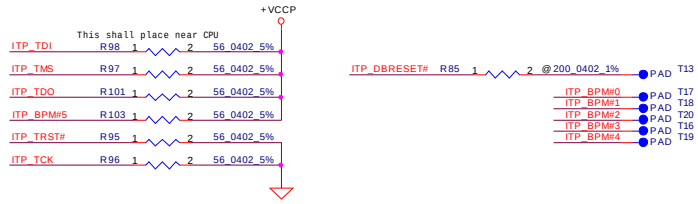

Thermal Sensor G781F

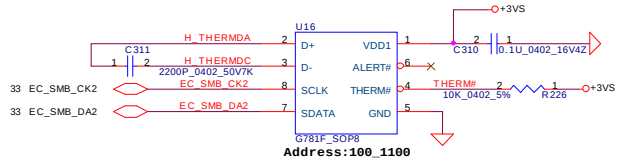

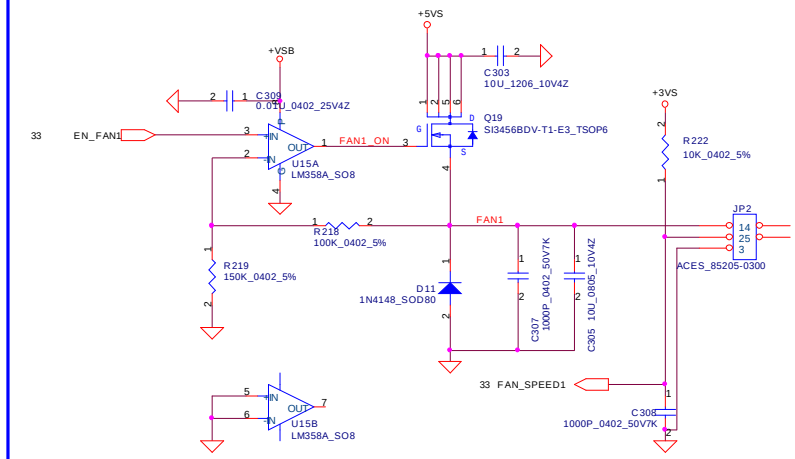

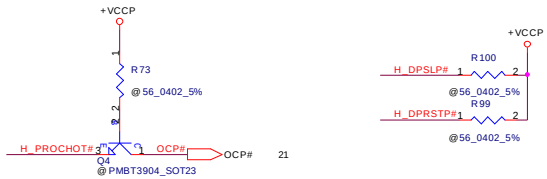

Security Classification	Compal Secret Data		
Issued Date	2005/10/06	Deciphered Date	2006/10/06

THIS SHEET OF ENGINEERING DRAWING IS THE PROPRIETARY PROPERTY OF COMPAL ELECTRONICS, INC. AND CONTAINS CONFIDENTIAL AND TRADE SECRET INFORMATION. THIS SHEET MAY NOT BE TRANSFERED FROM THE CUSTODY OF THE COMPETENT DIVISION OF R&D DEPARTMENT EXCEPT AS AUTHORIZED BY COMPAL ELECTRONICS, INC. NEITHER THIS SHEET NOR THE INFORMATION IT CONTAINS MAY BE USED BY OR DISCLOSED TO ANY THIRD PARTY WITHOUT PRIOR WRITTEN CONSENT OF COMPAL ELECTRONICS, INC.

Compal Electronics, Inc.

Title: **Yonah CPU in mFCPGA479**

Size: Custom | Document Number: IGL50/51 LA-3771 | Rev: 0.1

Date: 星期四, 六月 08, 2006 | Sheet 4 of 48

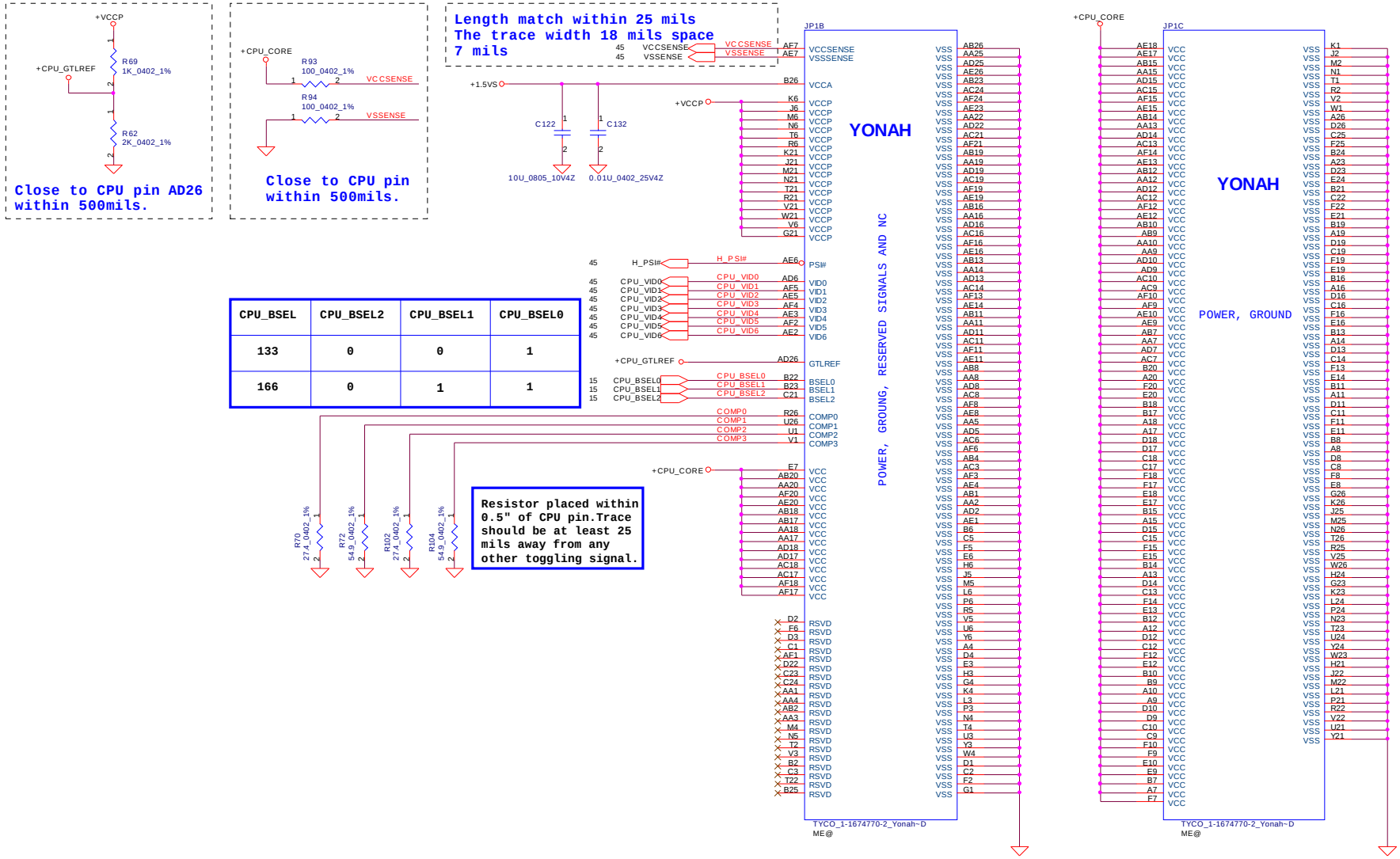

CPU_BSEL	CPU_BSEL2	CPU_BSEL1	CPU_BSEL0
133	0	0	1
166	0	1	1

Security Classification	Compal Secret Data		
Issued Date	2005/10/06	Deciphered Date	2006/10/06

THIS SHEET OF ENGINEERING DRAWING IS THE PROPRIETARY PROPERTY OF COMPAL ELECTRONICS, INC. AND CONTAINS CONFIDENTIAL AND TRADE SECRET INFORMATION. THIS SHEET MAY NOT BE TRANSFERED FROM THE CUSTODY OF THE COMPETENT DIVISION OF R&D DEPARTMENT EXCEPT AS AUTHORIZED BY COMPAL ELECTRONICS, INC. NEITHER THIS SHEET NOR THE INFORMATION IT CONTAINS MAY BE USED BY OR DISCLOSED TO ANY THIRD PARTY WITHOUT PRIOR WRITTEN CONSENT OF COMPAL ELECTRONICS, INC.

Compal Electronics, Inc.

Title: **Yonah CPU in mFCPGA479**

Size: Custom | Document Number: IGL50/51 LA-3771 | Rev: 0.1

Date: 星期四, 六月 08, 2006 | Sheet 5 of 48

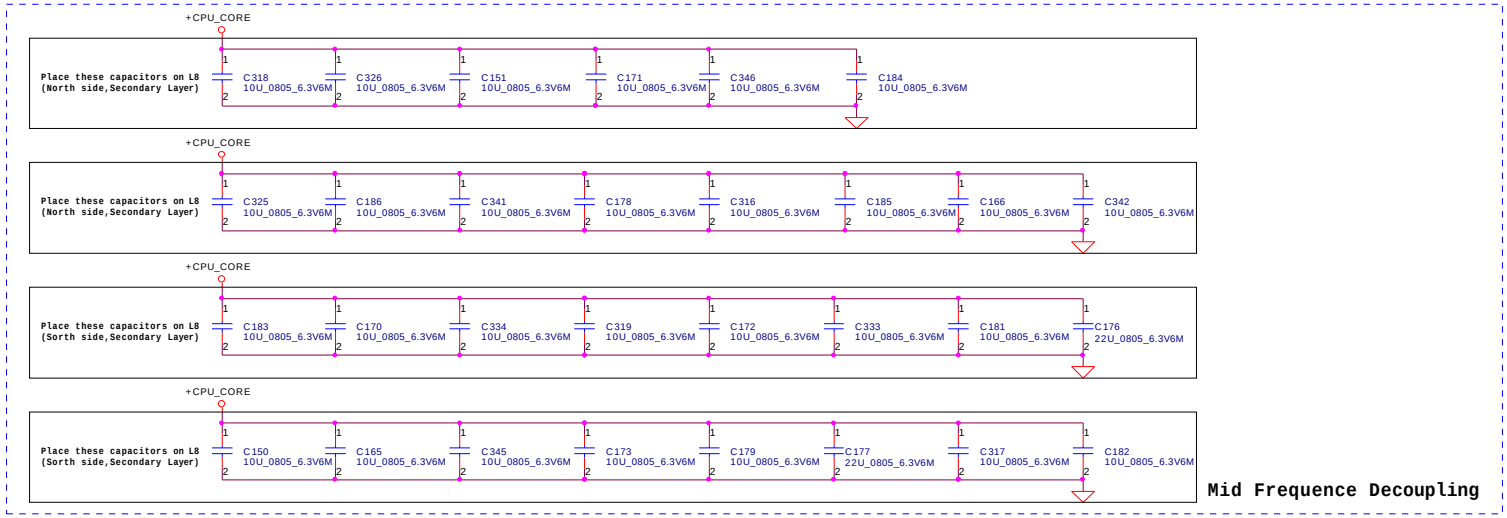

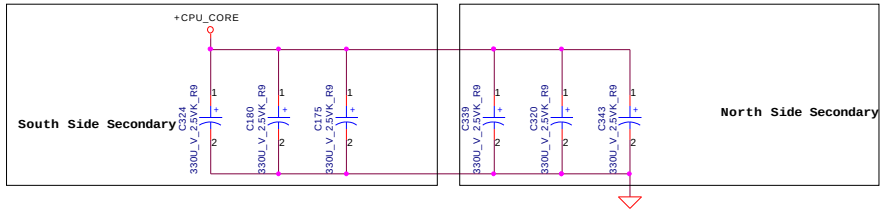

ESR <= 1.5m ohm
Capacitor > 1980uF

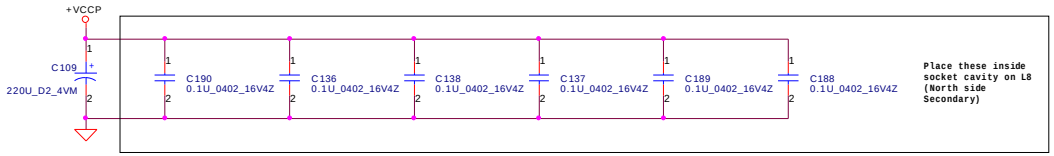

Security Classification	Compal Secret Data		
Issued Date	2005/10/06	Deciphered Date	2006/10/06

THIS SHEET OF ENGINEERING DRAWING IS THE PROPRIETARY PROPERTY OF COMPAL ELECTRONICS, INC. AND CONTAINS CONFIDENTIAL AND TRADE SECRET INFORMATION. THIS SHEET MAY NOT BE TRANSFERED FROM THE CUSTODY OF THE COMPETENT DIVISION OF R&D DEPARTMENT EXCEPT AS AUTHORIZED BY COMPAL ELECTRONICS, INC. NEITHER THIS SHEET NOR THE INFORMATION IT CONTAINS MAY BE USED BY OR DISCLOSED TO ANY THIRD PARTY WITHOUT PRIOR WRITTEN CONSENT OF COMPAL ELECTRONICS, INC.

Compal Electronics, Inc.

Title: **CPU Bypass capacitors**

Size: Custom | Document Number: IGL50/51 LA-3771 | Rev: 0.1

Date: 星期四, 六月 08, 2006 | Sheet 6 of 48

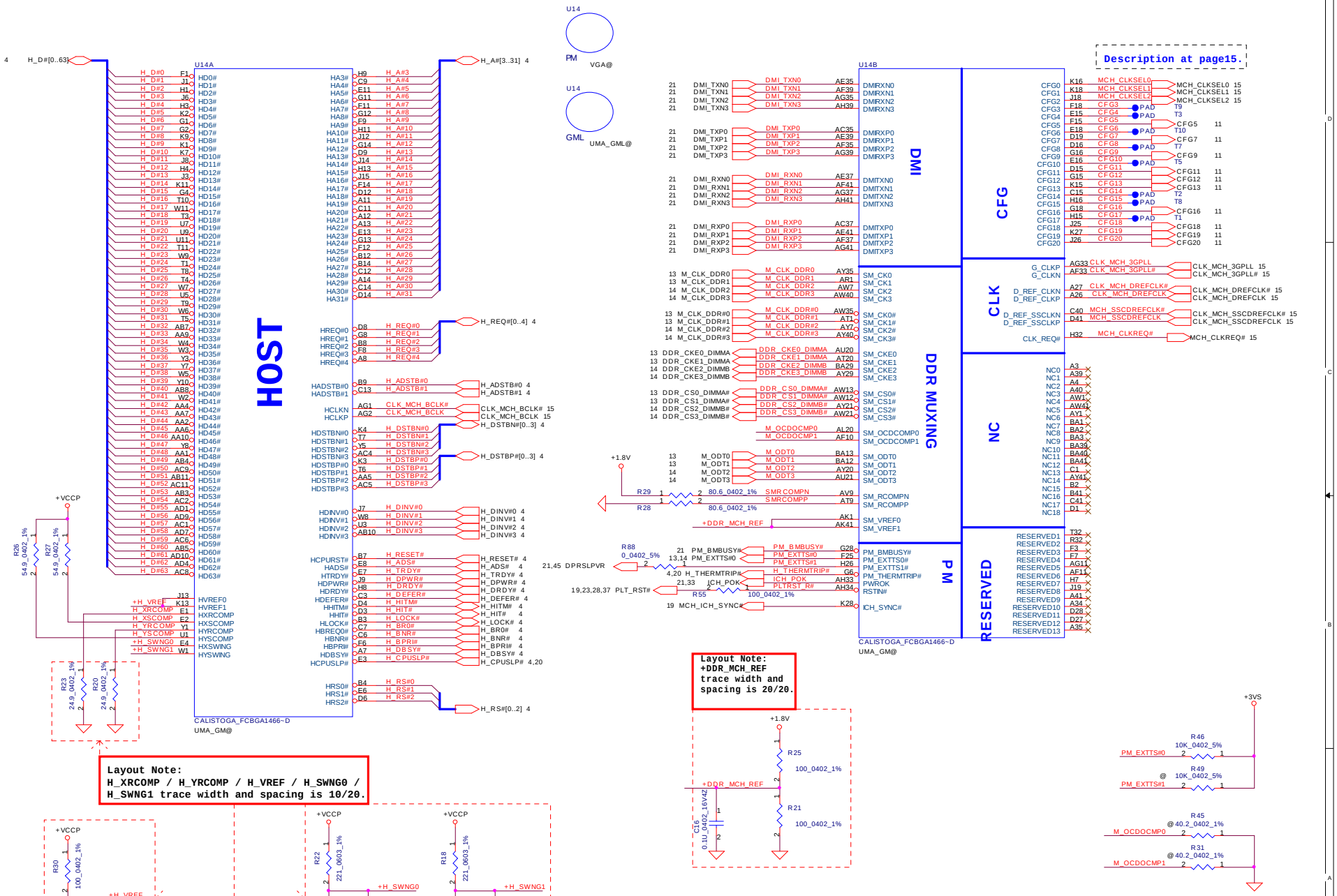

Security Classification	Compal Secret Data		
Issued Date	2005/10/06	Deciphered Date	2006/10/06

THIS SHEET OF ENGINEERING DRAWING IS THE PROPRIETARY PROPERTY OF COMPAL ELECTRONICS, INC. AND CONTAINS CONFIDENTIAL AND TRADE SECRET INFORMATION. THIS SHEET MAY NOT BE TRANSFERRED FROM THE CUSTODY OF THE COMPETENT DIVISION OF R&D DEPARTMENT EXCEPT AS AUTHORIZED BY COMPAL ELECTRONICS, INC. NEITHER THIS SHEET NOR THE INFORMATION IT CONTAINS MAY BE USED BY OR DISCLOSED TO ANY THIRD PARTY WITHOUT PRIOR WRITTEN CONSENT OF COMPAL ELECTRONICS, INC.

Compal Electronics, Inc.

Title: **Calistoga (1/6)**

Size	Document Number	Rev
Custom	IGL50/51 LA-3771	0.1

Date: 星期四, 六月 08, 2006 | Sheet 7 of 48

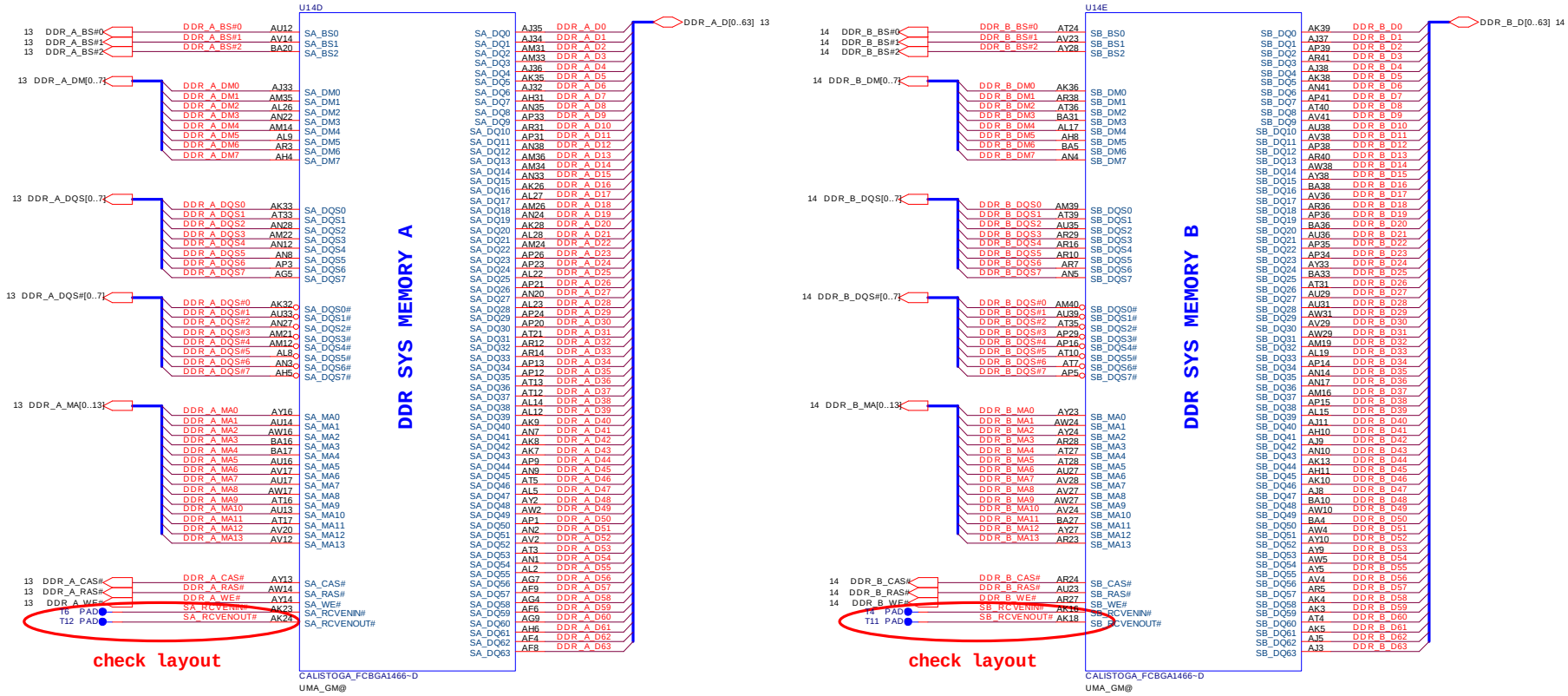

Security Classification	Compal Secret Data		
Issued Date	2005/10/06	Deciphered Date	2006/10/06

THIS SHEET OF ENGINEERING DRAWING IS THE PROPRIETARY PROPERTY OF COMPAL ELECTRONICS, INC. AND CONTAINS CONFIDENTIAL AND TRADE SECRET INFORMATION. THIS SHEET MAY NOT BE TRANSFERED FROM THE CUSTODY OF THE COMPETENT DIVISION OF R&D DEPARTMENT EXCEPT AS AUTHORIZED BY COMPAL ELECTRONICS, INC. NEITHER THIS SHEET NOR THE INFORMATION IT CONTAINS MAY BE USED BY OR DISCLOSED TO ANY THIRD PARTY WITHOUT PRIOR WRITTEN CONSENT OF COMPAL ELECTRONICS, INC.

Compal Electronics, Inc.

Title: **Calistoga (2/6)**

Size	Document Number	Rev
Custom	IGL50/51 LA-3771	0.1

Date: 星期四, 六月 08, 2006 | Sheet 8 of 48

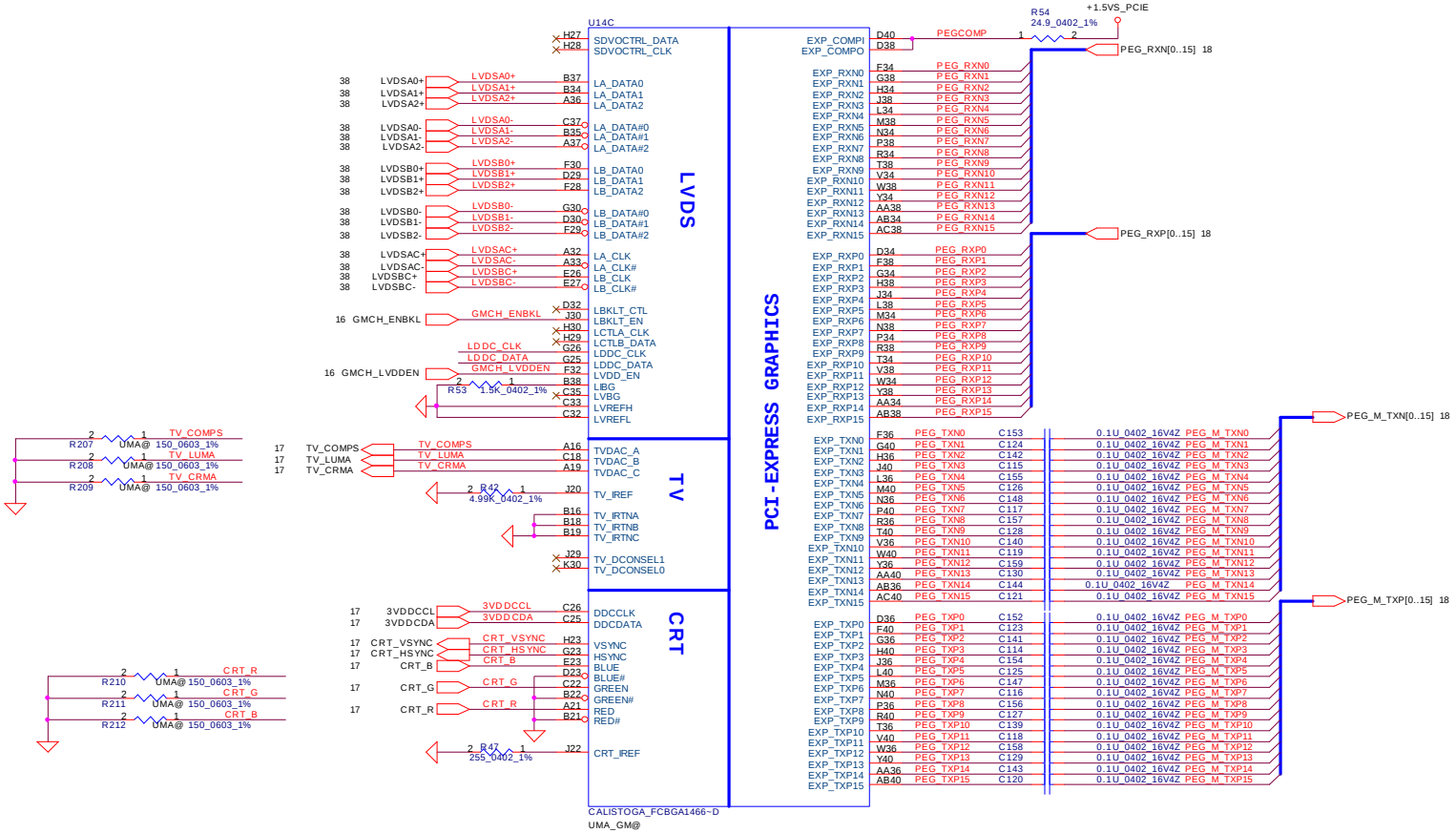

Security Classification	Compal Secret Data		
Issued Date	2005/10/06	Deciphered Date	2006/10/06

THIS SHEET OF ENGINEERING DRAWING IS THE PROPRIETARY PROPERTY OF COMPAL ELECTRONICS, INC. AND CONTAINS CONFIDENTIAL AND TRADE SECRET INFORMATION. THIS SHEET MAY NOT BE TRANSFERED FROM THE CUSTODY OF THE COMPETENT DIVISION OF R&D DEPARTMENT EXCEPT AS AUTHORIZED BY COMPAL ELECTRONICS, INC. NEITHER THIS SHEET NOR THE INFORMATION IT CONTAINS MAY BE USED BY OR DISCLOSED TO ANY THIRD PARTY WITHOUT PRIOR WRITTEN CONSENT OF COMPAL ELECTRONICS, INC.

Compal Electronics, Inc.

Title: **Calistoga (3/6)**

Size: Custom | Document Number: *IGL50/51 LA-3771* | Rev: 0.1

Date: 星期四, 六月 08, 2006 | Sheet 9 of 48

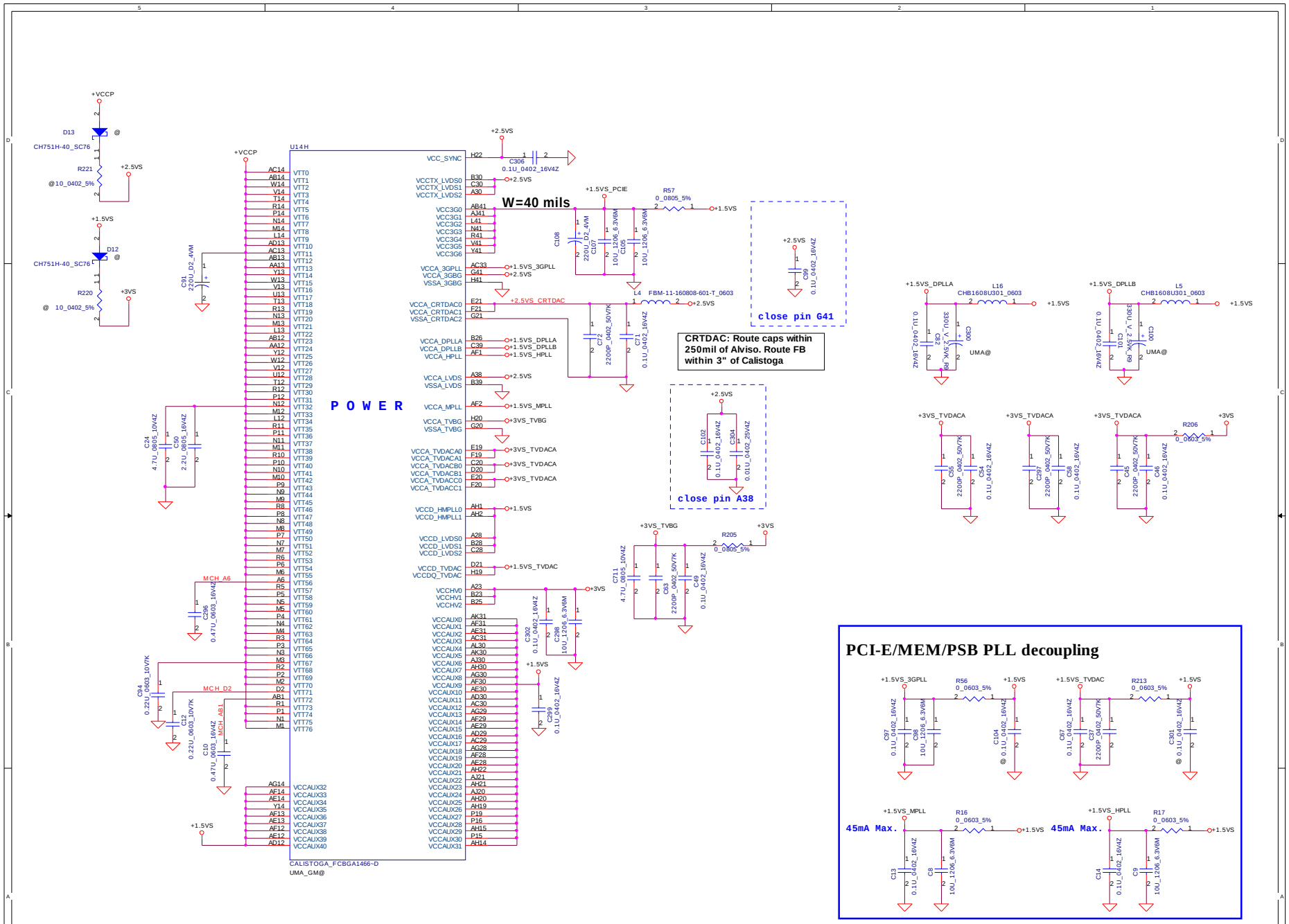

Security Classification	Compal Secret Data		
Issued Date	2005/10/06	Deciphered Date	2006/10/06

THIS SHEET OF ENGINEERING DRAWING IS THE PROPRIETARY PROPERTY OF COMPAL ELECTRONICS, INC. AND CONTAINS CONFIDENTIAL AND TRADE SECRET INFORMATION. THIS SHEET MAY NOT BE TRANSFERED FROM THE CUSTODY OF THE COMPETENT DIVISION OF R&D DEPARTMENT EXCEPT AS AUTHORIZED BY COMPAL ELECTRONICS, INC. NEITHER THIS SHEET NOR THE INFORMATION IT CONTAINS MAY BE USED BY OR DISCLOSED TO ANY THIRD PARTY WITHOUT PRIOR WRITTEN CONSENT OF COMPAL ELECTRONICS, INC.

Compal Electronics, Inc.

Title: *Calistoga (4/6)*

Size: Custom | Document Number: *IGL50/51 LA-3771* | Rev: 0.1

Date: 星期四, 六月 08, 2006 | Sheet 10 of 48

Strap Pin Table

CFG[3:17] have internal pull up

CFG[19:18] have internal pull down

CFG[2:0]	011 = 667MT/s FSB 001 = 533MT/s FSB
CFG5	0 = DMI x 2 1 = DMI x 4*(Default)
CFG7	0 = Reserved 1 = Mobile Yonah CPU*(Default)
CFG9	0 = Lane Reversal Enable 1 = Normal Operation (Default)*
CFG6 PSB 4X CLK Enable	0 = Reserved 1 = Calistoga *
CFG[13:12]	00 = Reserved 01 = XOR Mode Enabled 10 = All Z Mode Enabled 11 = Normal Operation *(Default)
CFG16	0 = Dynamic ODT Disabled 1 = Dynamic ODT Enabled *(Default)
CFG10 CFG18	10 = 1.05V*(Default) 01 = 1.5V
CFG19	0 = Normal Operation. * (Default) 1 = DMI Lane Reversal Enable
SDVO_CTRLDATA	0 = No SDVO Device Present * (Default) 1 = SDVO Device Present
CFG20 (PCIE/SDVO select)	0 = Only PCIE or SDVO is operational. *(Default) 1 = PCIE/SDVO are operating simu.

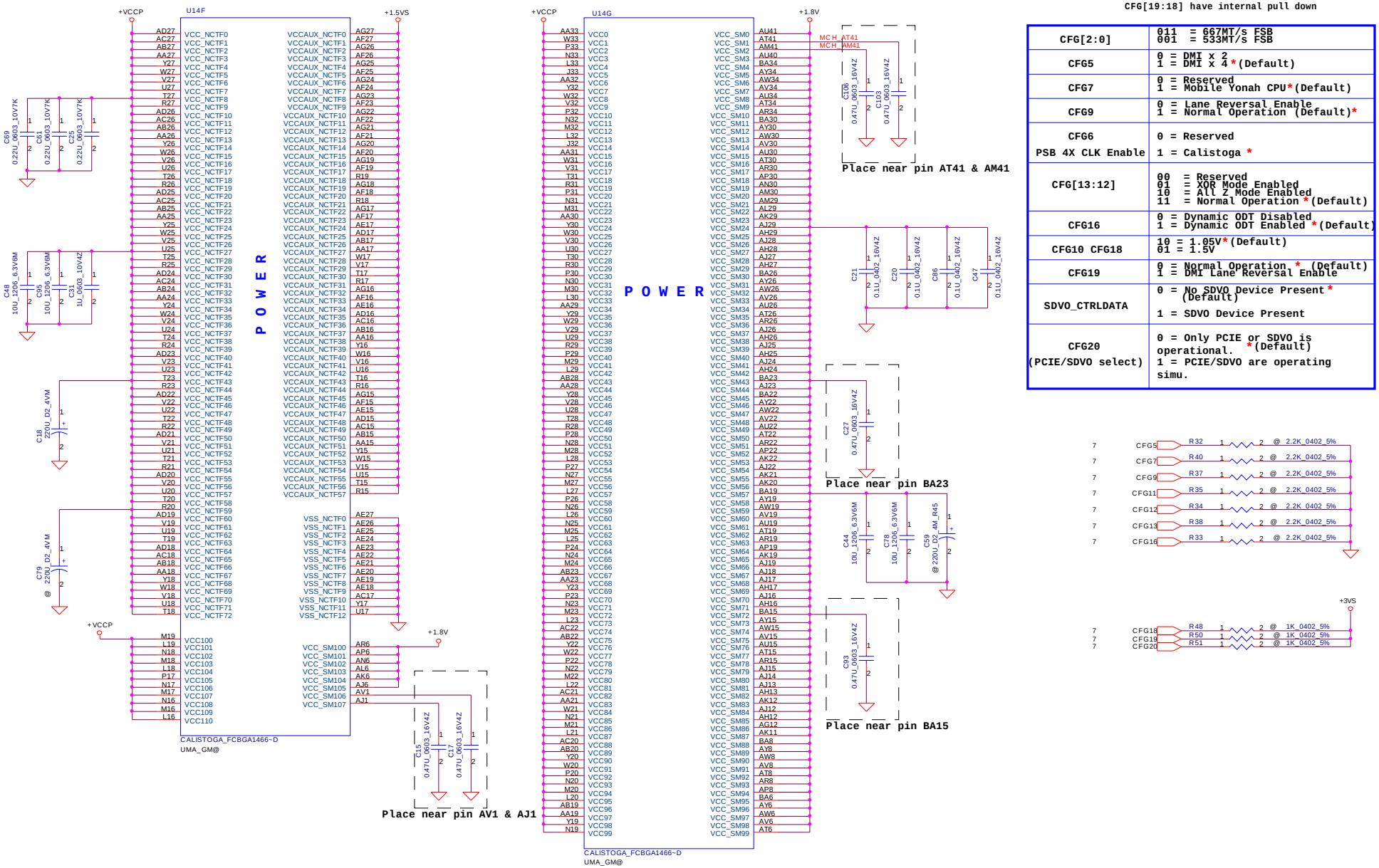

Security Classification	Compal Secret Data		
Issued Date	2005/10/06	Deciphered Date	2006/10/06

THIS SHEET OF ENGINEERING DRAWING IS THE PROPRIETARY PROPERTY OF COMPAL ELECTRONICS, INC. AND CONTAINS CONFIDENTIAL AND TRADE SECRET INFORMATION. THIS SHEET MAY NOT BE TRANSFERED FROM THE CUSTODY OF THE COMPETENT DIVISION OF R&D DEPARTMENT EXCEPT AS AUTHORIZED BY COMPAL ELECTRONICS, INC. NEITHER THIS SHEET NOR THE INFORMATION IT CONTAINS MAY BE USED BY OR DISCLOSED TO ANY THIRD PARTY WITHOUT PRIOR WRITTEN CONSENT OF COMPAL ELECTRONICS, INC.

Compal Electronics, Inc.

Title: *Calistoga (5/6)*

Size: Custom | Document Number: *IGL50/51 LA-3771* | Rev: 0.1

Date: 星期四, 六月 08, 2006 | Sheet 11 of 48

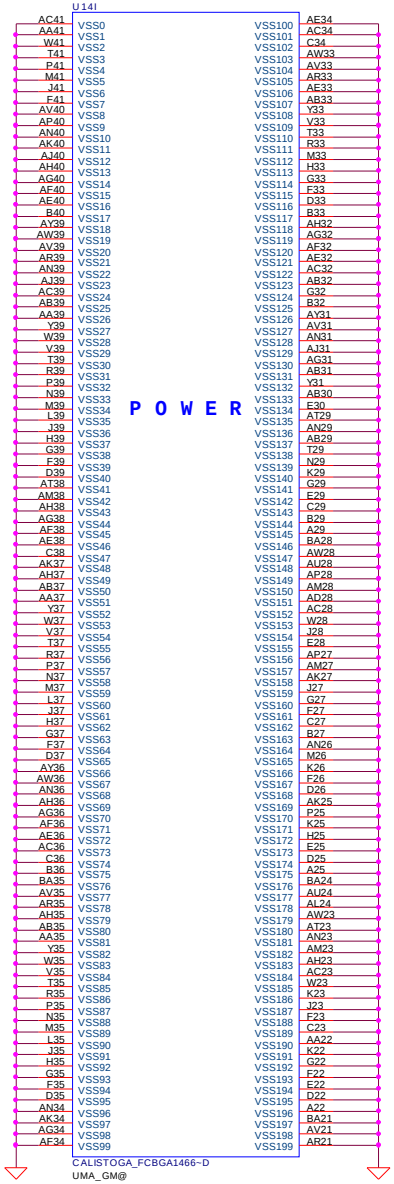

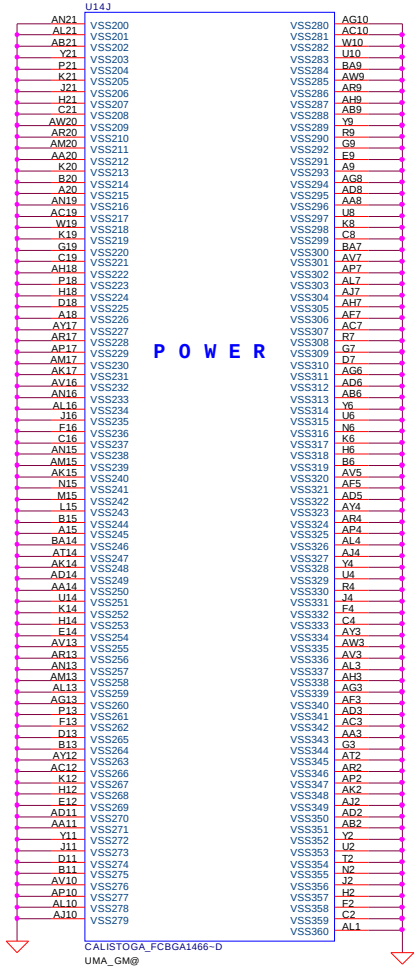

Security Classification	Compal Secret Data		
Issued Date	2005/10/06	Deciphered Date	2006/10/06

THIS SHEET OF ENGINEERING DRAWING IS THE PROPRIETARY PROPERTY OF COMPAL ELECTRONICS, INC. AND CONTAINS CONFIDENTIAL AND TRADE SECRET INFORMATION. THIS SHEET MAY NOT BE TRANSFERED FROM THE CUSTODY OF THE COMPETENT DIVISION OF R&D DEPARTMENT EXCEPT AS AUTHORIZED BY COMPAL ELECTRONICS, INC. NEITHER THIS SHEET NOR THE INFORMATION IT CONTAINS MAY BE USED BY OR DISCLOSED TO ANY THIRD PARTY WITHOUT PRIOR WRITTEN CONSENT OF COMPAL ELECTRONICS, INC.

Compal Electronics, Inc.

Title: **Calistoga (6/6)**

Size	Document Number	Rev
Custom	IGL50/51 LA-3771	0.1

Date: 星期四, 六月 08, 2006 | Sheet 12 of 48

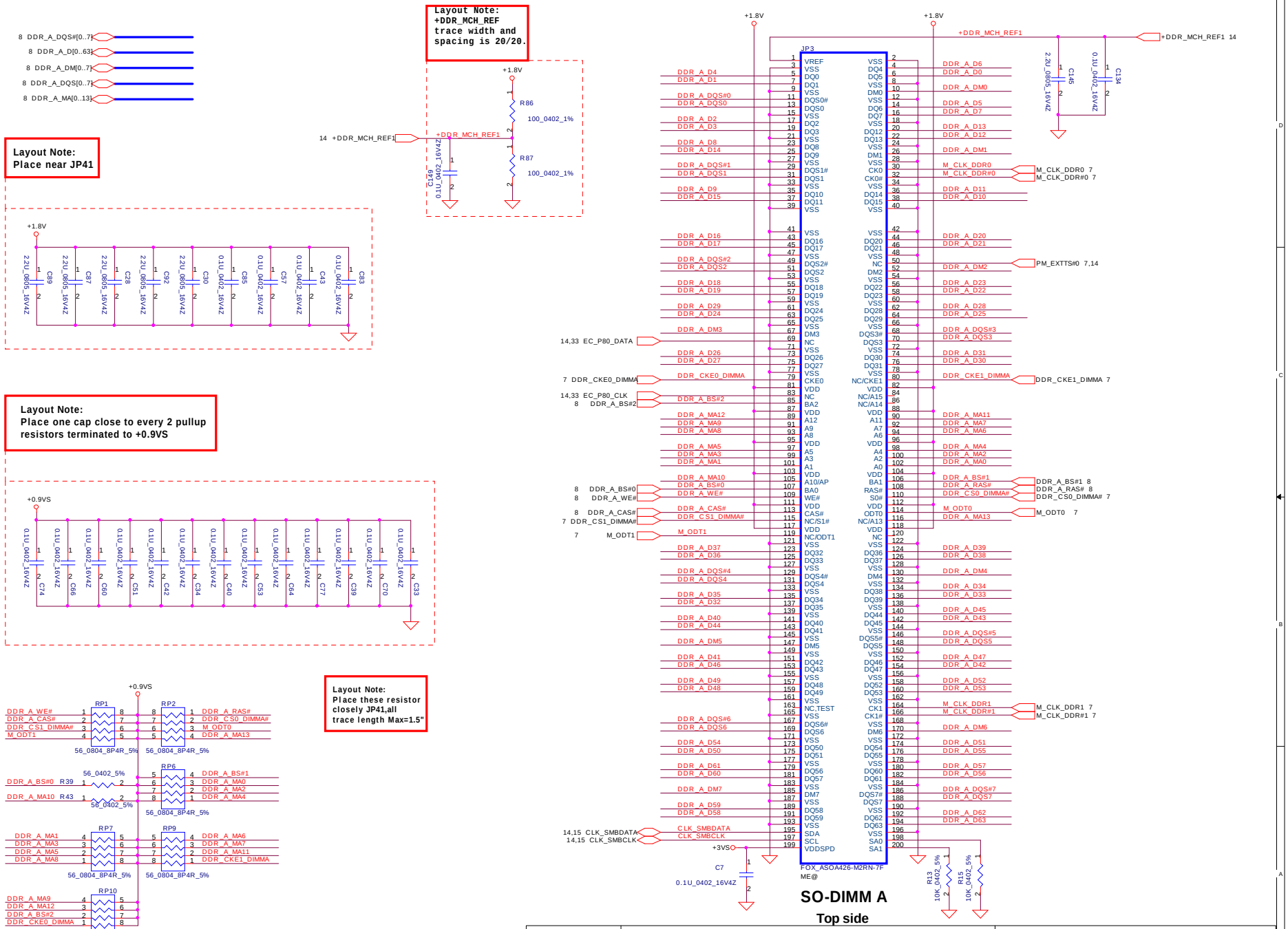

Security Classification	Compal Secret Data		
Issued Date	2005/10/06	Deciphered Date	2006/10/06

THIS SHEET OF ENGINEERING DRAWING IS THE PROPRIETARY PROPERTY OF COMPAL ELECTRONICS, INC. AND CONTAINS CONFIDENTIAL AND TRADE SECRET INFORMATION. THIS SHEET MAY NOT BE TRANSFERED FROM THE CUSTODY OF THE COMPETENT DIVISION OF R&D DEPARTMENT EXCEPT AS AUTHORIZED BY COMPAL ELECTRONICS, INC. NEITHER THIS SHEET NOR THE INFORMATION IT CONTAINS MAY BE USED BY OR DISCLOSED TO ANY THIRD PARTY WITHOUT PRIOR WRITTEN CONSENT OF COMPAL ELECTRONICS, INC.

Compal Electronics, Inc.

Title: DDRII-SODIMM SLOT1

Size: Custom | Document Number: IGL50/51 LA-3771 | Rev: 0.1

Date: 星期四, 六月 08, 2006 | Sheet 13 of 48

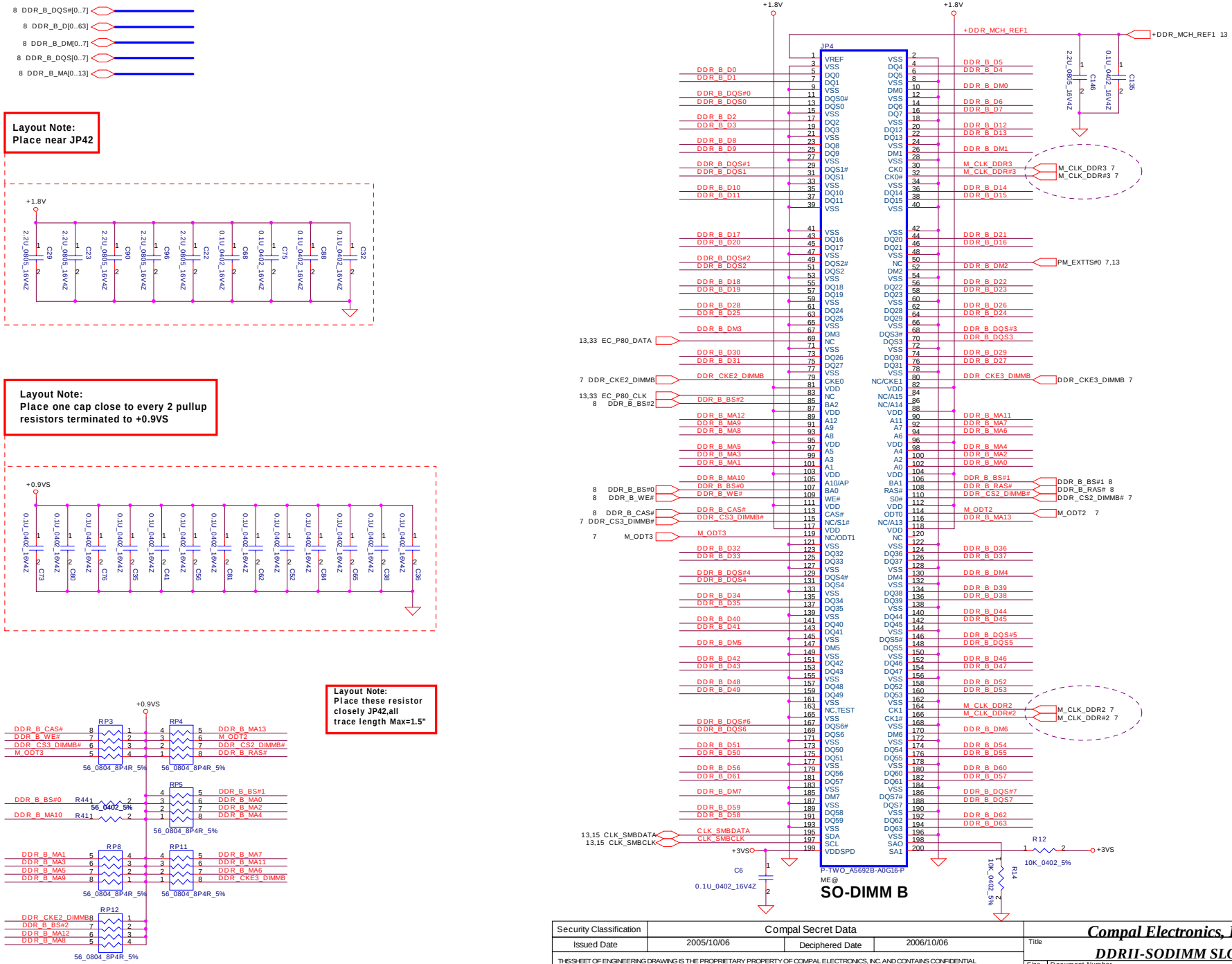

Security Classification	Compal Secret Data		
Issued Date	2005/10/06	Deciphered Date	2006/10/06

THIS SHEET OF ENGINEERING DRAWING IS THE PROPRIETARY PROPERTY OF COMPAL ELECTRONICS, INC. AND CONTAINS CONFIDENTIAL AND TRADE SECRET INFORMATION. THIS SHEET MAY NOT BE TRANSFERED FROM THE CUSTODY OF THE COMPETENT DIVISION OF R&D DEPARTMENT EXCEPT AS AUTHORIZED BY COMPAL ELECTRONICS, INC. NEITHER THIS SHEET NOR THE INFORMATION IT CONTAINS MAY BE USED BY OR DISCLOSED TO ANY THIRD PARTY WITHOUT PRIOR WRITTEN CONSENT OF COMPAL ELECTRONICS, INC.

Compal Electronics, Inc.

Title: **DDRII-SODIMM SLOT2**

Size	Document Number	Rev
	IGL50/51 LA-3771	0.1

Date: 星期四, 六月 08, 2006 Sheet 14 of 48

FSLC CLKSEL2	FSLB CLKSEL1	FSLA CLKSEL0	CPU MHz	SRC MHz	PCI MHz
0	0	1	133	100	33.3
0	1	1	166	100	33.3

Table : ICS954306

FSB Frequency Selet:

CPU Driven *(Default)	Stuff	CLK_Ra CLK_Rb CLK_Rc
	No Stuff	CLK_Rd CLK_Re CLK_Rf
533MHz	Stuff	CLK_Rd CLK_Re CLK_Rf
	No Stuff	CLK_Ra CLK_Rb CLK_Rc
667MHz	Stuff	CLK_Rd CLK_Rf
	No Stuff	CLK_Ra CLK_Rb CLK_Rc CLK_Re

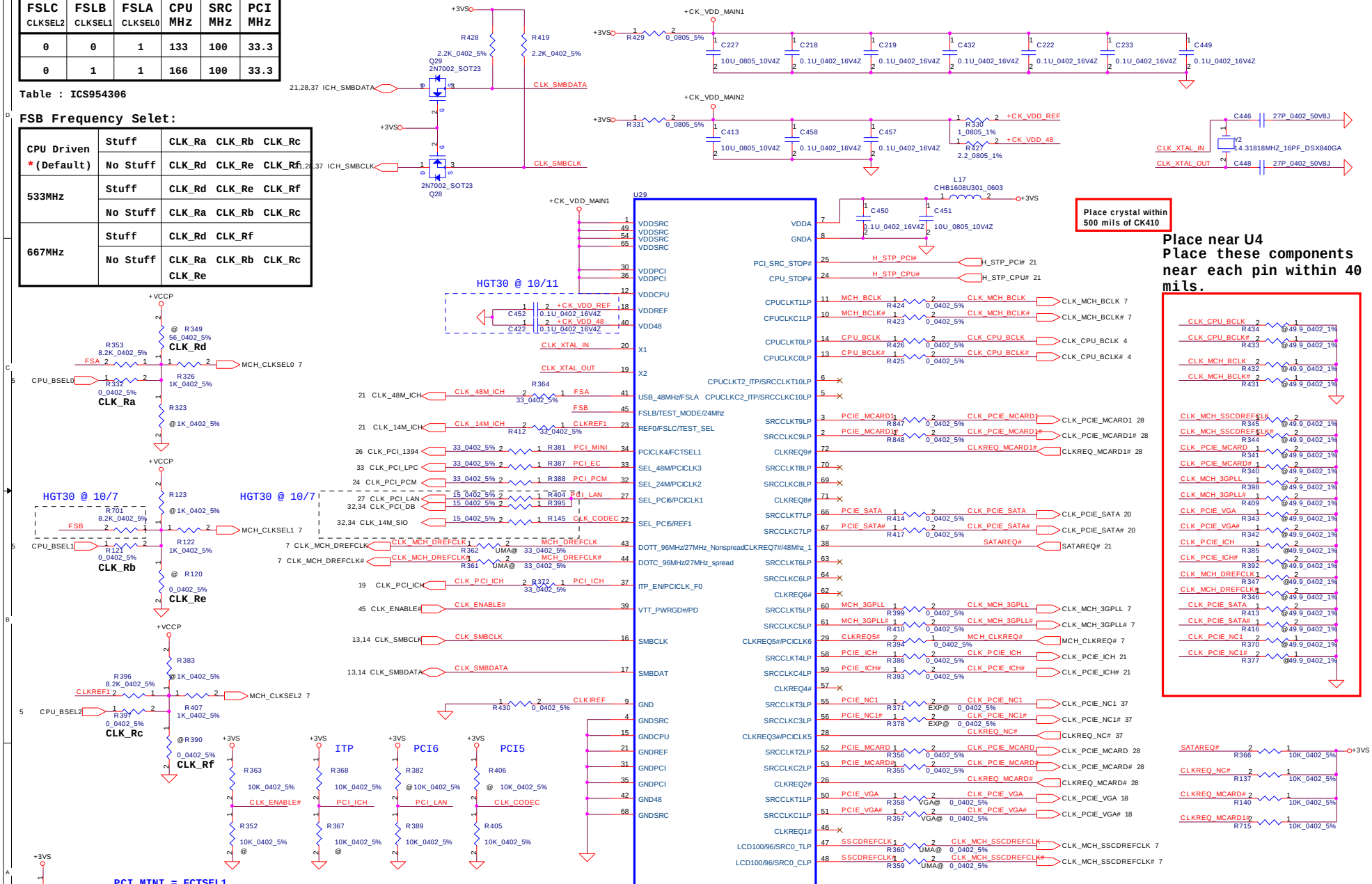

PCI_MINI = FCTSEL1

FCTSEL1 (PIN34)	PIN43	PIN44	PIN47	PIN48
0	DOT96T	DOT96C	96/100M_T	96/100M_C
1	27Mout	27MSSout	SRCT0	SRCC0

PCI_PME=SEL_PCI6

PCI_LAN	PIN27
0	CLKREQ5
1	PCICLK6

Security Classification	Compal Secret Data		
Issued Date	2005/10/06	Deciphered Date	2006/10/06

THIS SHEET OF ENGINEERING DRAWING IS THE PROPRIETARY PROPERTY OF COMPAL ELECTRONICS, INC. AND CONTAINS CONFIDENTIAL AND TRADE SECRET INFORMATION. THIS SHEET MAY NOT BE TRANSFERED FROM THE CUSTODY OF THE COMPETENT DIVISION OF R&D DEPARTMENT EXCEPT AS AUTHORIZED BY COMPAL ELECTRONICS, INC. NEITHER THIS SHEET NOR THE INFORMATION IT CONTAINS MAY BE USED BY OR DISCLOSED TO ANY THIRD PARTY WITHOUT PRIOR WRITTEN CONSENT OF COMPAL ELECTRONICS, INC.

Compal Electronics, Inc.

Title: Clock generator

Size | Document Number: IGL50/51 LA-3771 | Rev 0.1

Date: 星期四, 六月 08, 2006 | Sheet 15 of 48

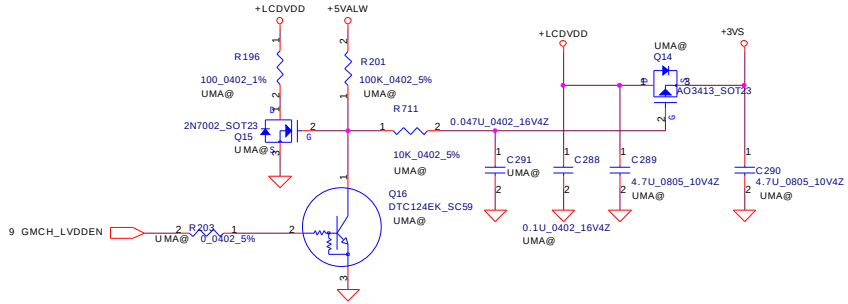

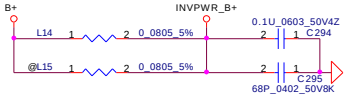

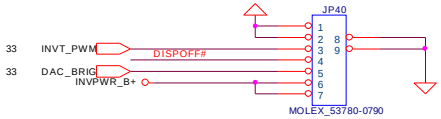

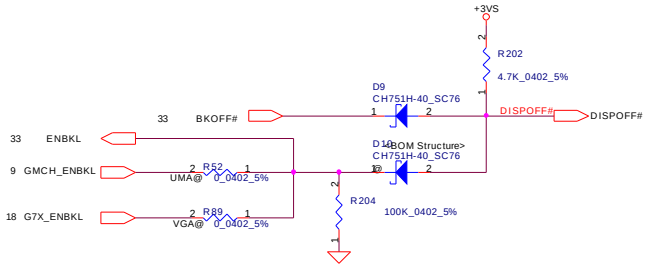

Security Classification	Compal Secret Data		
Issued Date	2005/10/06	Deciphered Date	2006/10/06

THIS SHEET OF ENGINEERING DRAWING IS THE PROPRIETARY PROPERTY OF COMPAL ELECTRONICS, INC. AND CONTAINS CONFIDENTIAL AND TRADE SECRET INFORMATION. THIS SHEET MAY NOT BE TRANSFERED FROM THE CUSTODY OF THE COMPETENT DIVISION OF R&D DEPARTMENT EXCEPT AS AUTHORIZED BY COMPAL ELECTRONICS, INC. NEITHER THIS SHEET NOR THE INFORMATION IT CONTAINS MAY BE USED BY OR DISCLOSED TO ANY THIRD PARTY WITHOUT PRIOR WRITTEN CONSENT OF COMPAL ELECTRONICS, INC.

Compal Electronics, Inc.

Title: **LVDS Connector**

Size: Custom | Document Number: IGL50/51 LA-3771 | Rev: 0.1

Date: 星期四, 六月 08, 2006 | Sheet 16 of 48

TV-OUT Conn.

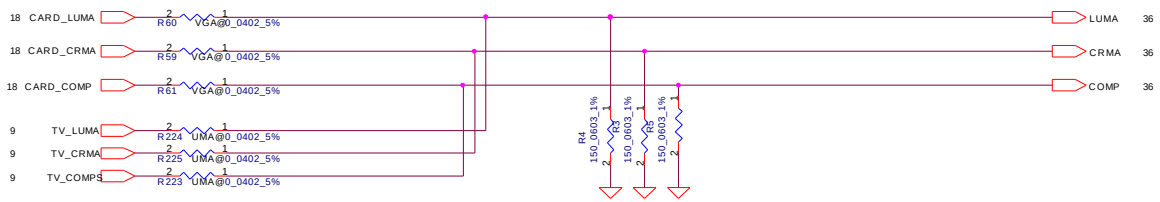

Pop when with internal graphics

CRT Conn.

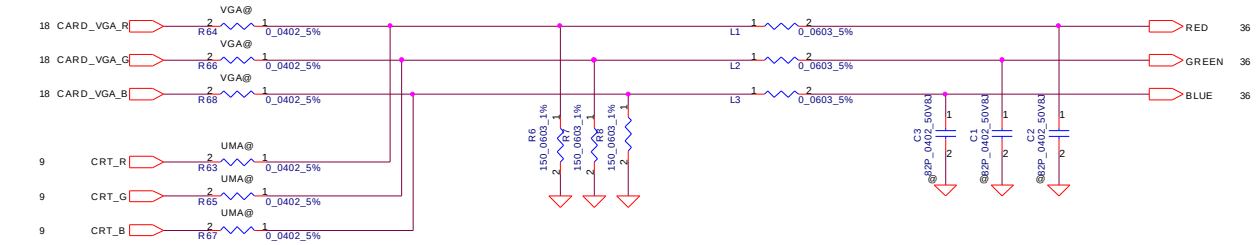

Pop when with internal graphics

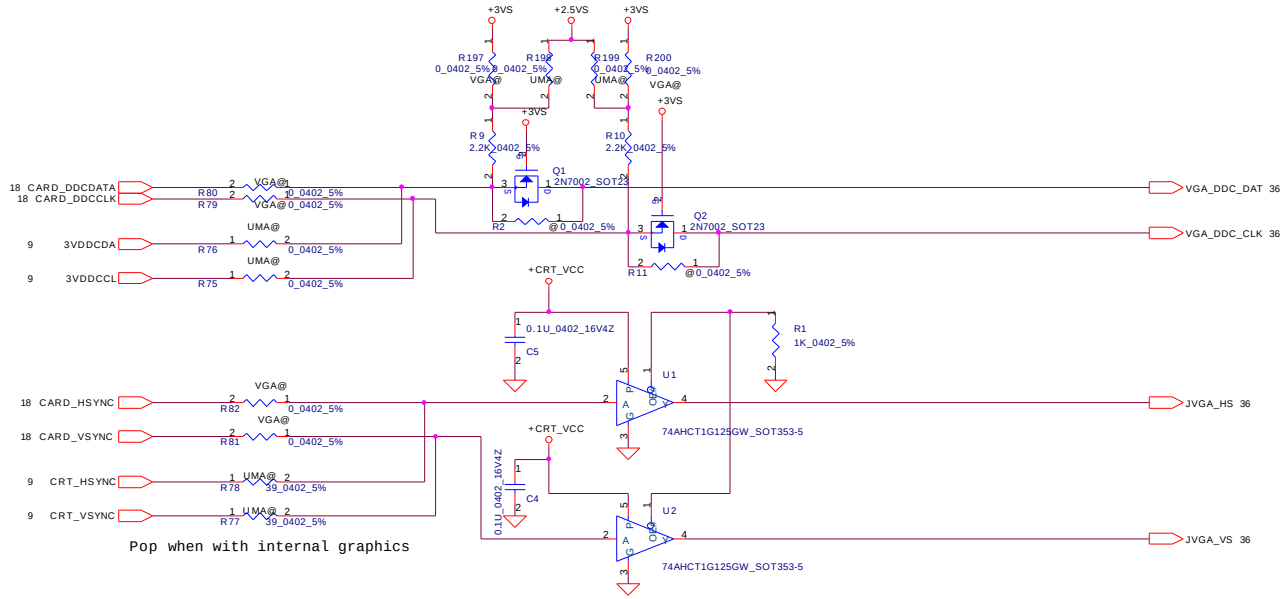

Pop when with internal graphics

Security Classification	Compal Secret Data		
Issued Date	2005/10/06	Deciphered Date	2006/10/06

THIS SHEET OF ENGINEERING DRAWING IS THE PROPRIETARY PROPERTY OF COMPAL ELECTRONICS, INC. AND CONTAINS CONFIDENTIAL AND TRADE SECRET INFORMATION. THIS SHEET MAY NOT BE TRANSFERED FROM THE CUSTODY OF THE COMPETENT DIVISION OF R&D DEPARTMENT EXCEPT AS AUTHORIZED BY COMPAL ELECTRONICS, INC. NEITHER THIS SHEET NOR THE INFORMATION IT CONTAINS MAY BE USED BY OR DISCLOSED TO ANY THIRD PARTY WITHOUT PRIOR WRITTEN CONSENT OF COMPAL ELECTRONICS, INC.

Compal Electronics, Inc.

Title: **CRT & TVout**

Size: Custom | Document Number: IGL50/51 LA-3771 | Rev: 0.1

Date: 星期四, 六月 08, 2006 | Sheet 17 of 48

MAX. 4.06A @ 1.8V

MAX. 130mA @ 2.5V

MAX. 655mA @ 3.3V

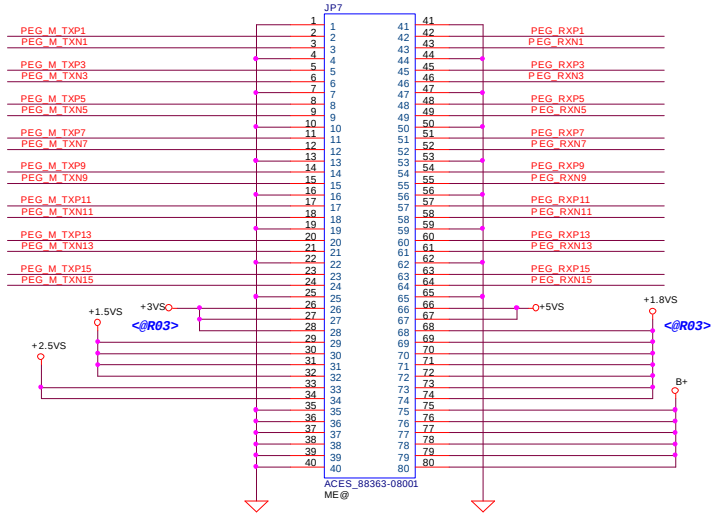

< New Add Pin.28 for +3VS, Pin.68 for +1.8VS @R03 >

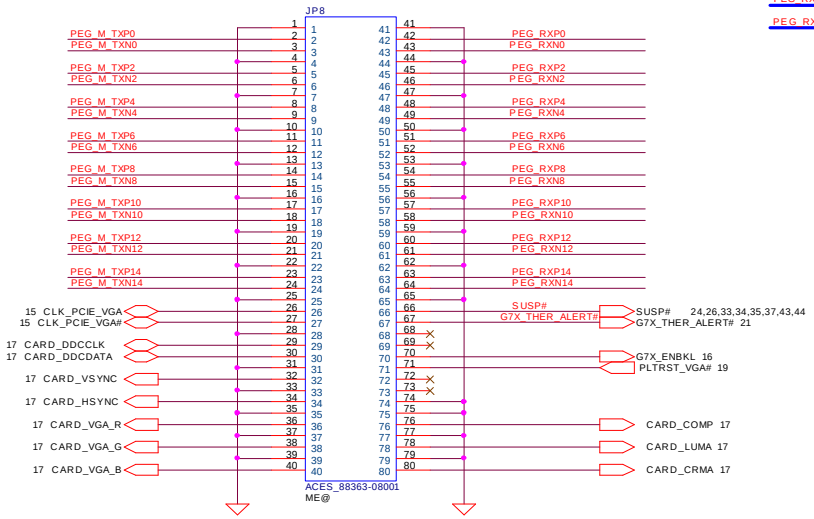

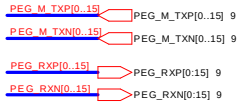

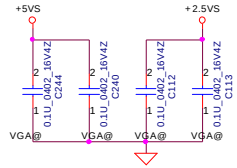

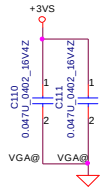

THIS SHEET OF ENGINEERING DRAWING IS THE PROPRIETARY PROPERTY OF COMPAL ELECTRONICS, INC. AND CONTAINS CONFIDENTIAL AND TRADE SECRET INFORMATION. THIS SHEET MAY NOT BE TRANSFERED FROM THE CUSTODY OF THE COMPETENT DIVISION OF R&D DEPARTMENT EXCEPT AS AUTHORIZED BY COMPAL ELECTRONICS, INC. NEITHER THIS SHEET NOR THE INFORMATION IT CONTAINS MAY BE USED BY OR DISCLOSED TO ANY THIRD PARTY WITHOUT PRIOR WRITTEN CONSENT OF COMPAL ELECTRONICS, INC.

Title	**Compal Electronics, Inc.**	
	VGA/B connector	
Size	Document Number	Rev
Custom	*IGL50/51 LA-3771*	0.1
Date: 星期四, 六月 08, 2006	Sheet 18 of 48	

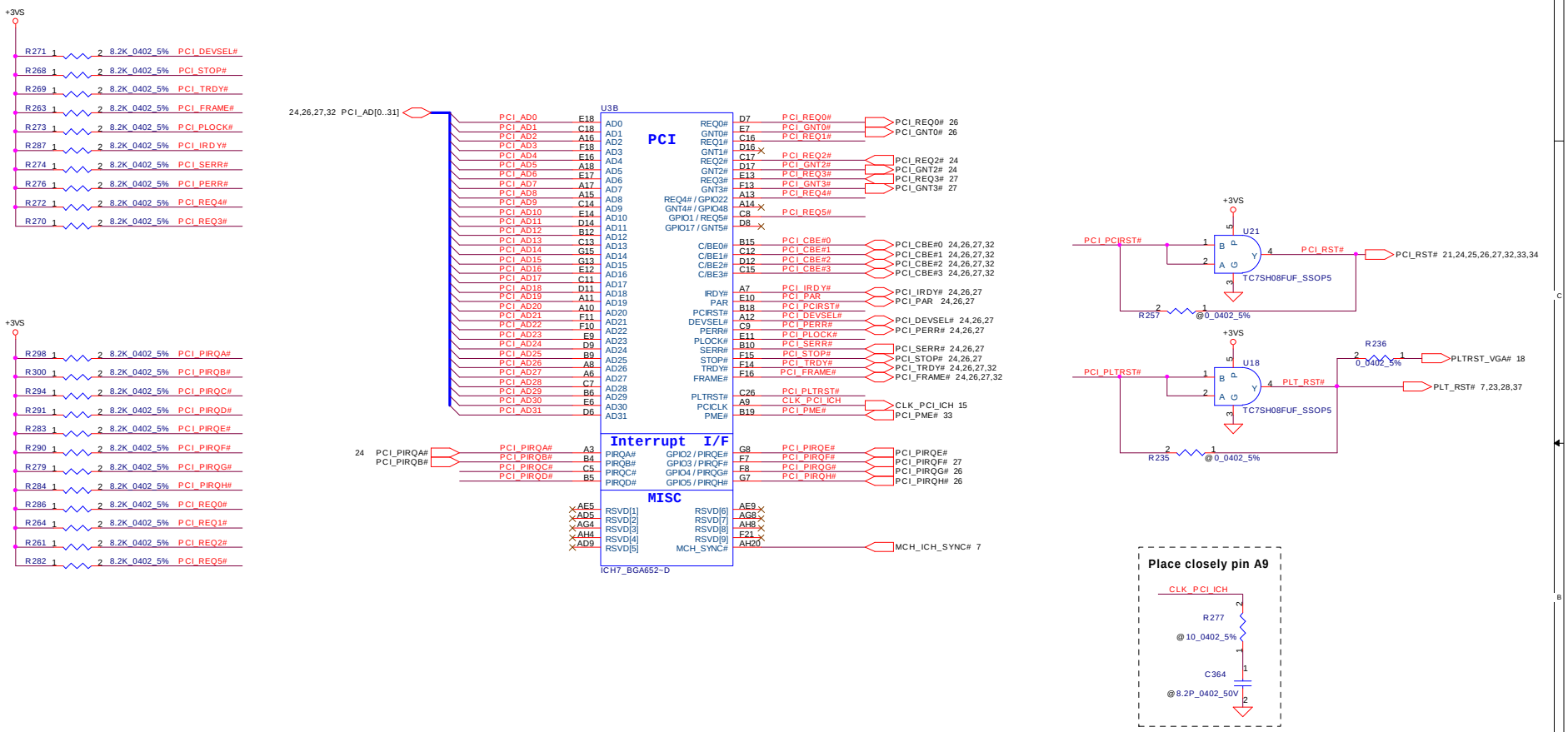

Security Classification	Compal Secret Data		
Issued Date	2005/10/06	Deciphered Date	2006/10/06

THIS SHEET OF ENGINEERING DRAWING IS THE PROPRIETARY PROPERTY OF COMPAL ELECTRONICS, INC. AND CONTAINS CONFIDENTIAL AND TRADE SECRET INFORMATION. THIS SHEET MAY NOT BE TRANSFERED FROM THE CUSTODY OF THE COMPETENT DIVISION OF R&D DEPARTMENT EXCEPT AS AUTHORIZED BY COMPAL ELECTRONICS, INC. NEITHER THIS SHEET NOR THE INFORMATION IT CONTAINS MAY BE USED BY OR DISCLOSED TO ANY THIRD PARTY WITHOUT PRIOR WRITTEN CONSENT OF COMPAL ELECTRONICS, INC.

Compal Electronics, Inc.

Title: **ICH7-M(1/4)**

Size	Document Number	Rev
	IGL50/51 LA-3771	0.1

Date: 星期四, 六月 08, 2006 Sheet 19 of 48

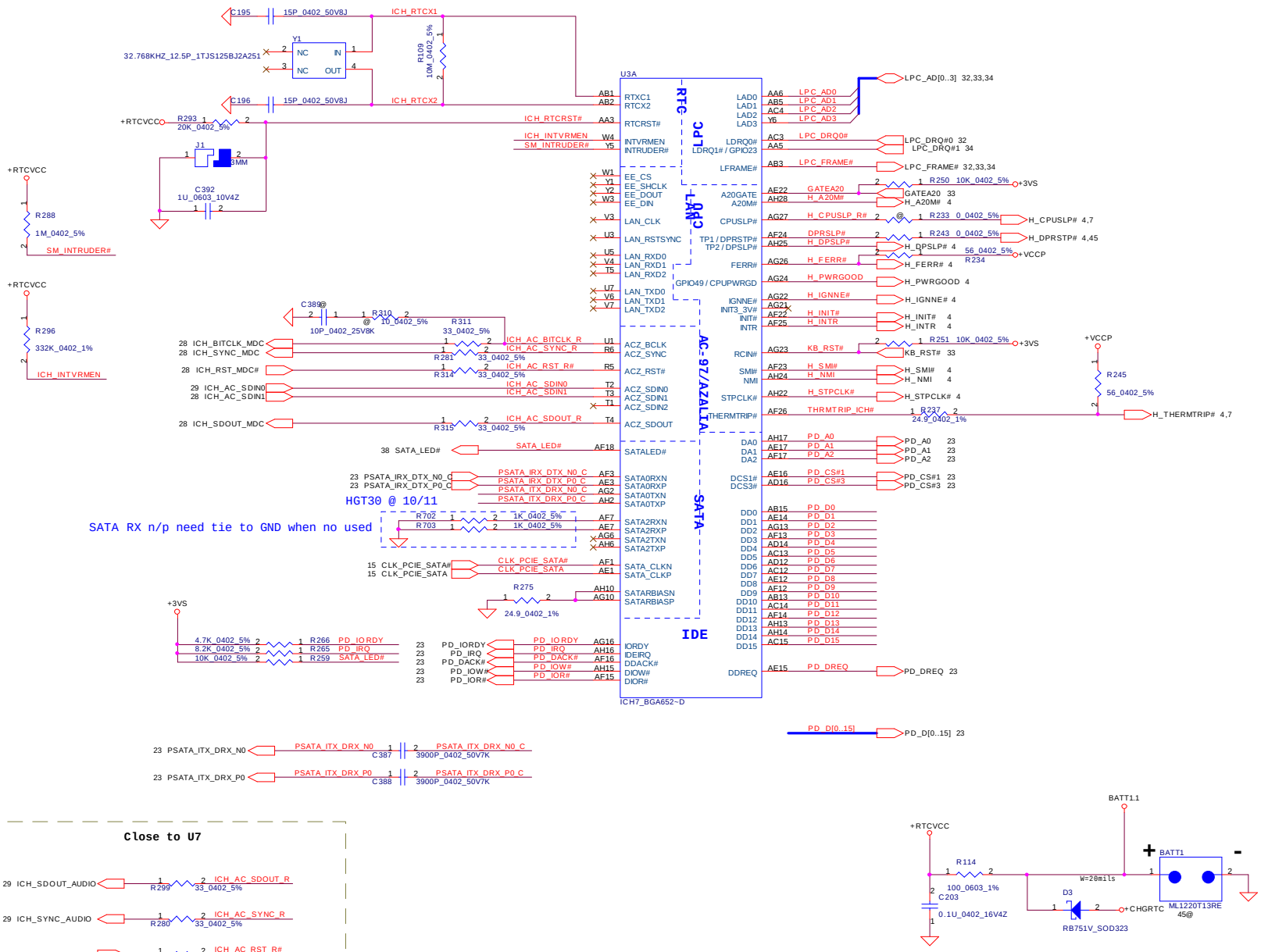

Security Classification	Compal Secret Data		
Issued Date	2005/10/06	Deciphered Date	2006/10/06

THIS SHEET OF ENGINEERING DRAWING IS THE PROPRIETARY PROPERTY OF COMPAL ELECTRONICS, INC. AND CONTAINS CONFIDENTIAL AND TRADE SECRET INFORMATION. THIS SHEET MAY NOT BE TRANSFERED FROM THE CUSTODY OF THE COMPETENT DIVISION OF R&D DEPARTMENT EXCEPT AS AUTHORIZED BY COMPAL ELECTRONICS, INC. NEITHER THIS SHEET NOR THE INFORMATION IT CONTAINS MAY BE USED BY OR DISCLOSED TO ANY THIRD PARTY WITHOUT PRIOR WRITTEN CONSENT OF COMPAL ELECTRONICS, INC.

Compal Electronics, Inc.

Title: ICH7-M(2/4)

Size: Custom | Document Number: IGL50/51 LA-3771 | Rev: 0.1

Date: 星期四, 六月 08, 2006 | Sheet 20 of 48

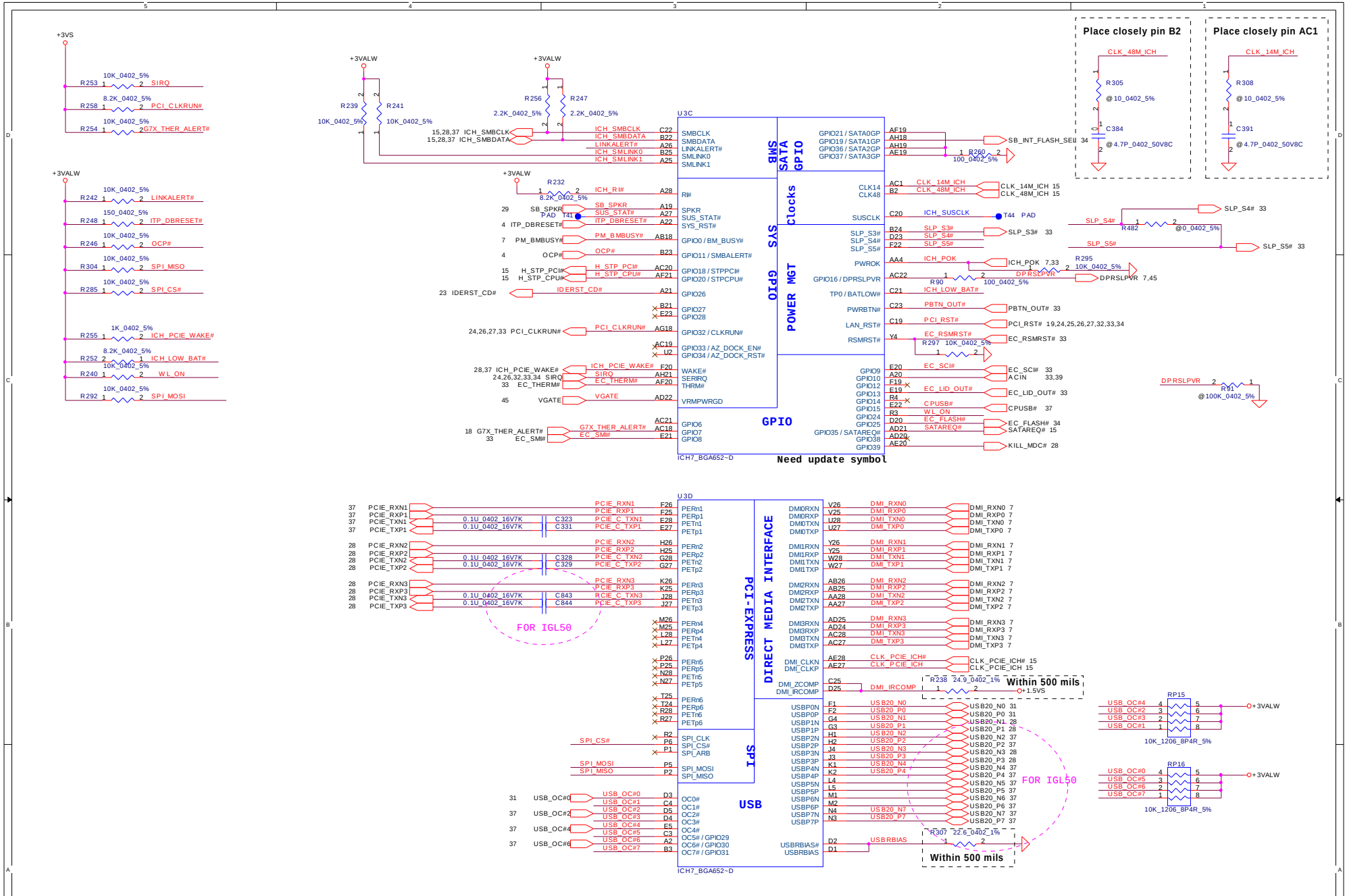

Security Classification	Compal Secret Data		
Issued Date	2005/10/06	Deciphered Date	2006/10/06

THIS SHEET OF ENGINEERING DRAWING IS THE PROPRIETARY PROPERTY OF COMPAL ELECTRONICS, INC. AND CONTAINS CONFIDENTIAL AND TRADE SECRET INFORMATION. THIS SHEET MAY NOT BE TRANSFERED FROM THE CUSTODY OF THE COMPETENT DIVISION OF R&D DEPARTMENT EXCEPT AS AUTHORIZED BY COMPAL ELECTRONICS, INC. NEITHER THIS SHEET NOR THE INFORMATION IT CONTAINS MAY BE USED BY OR DISCLOSED TO ANY THIRD PARTY WITHOUT PRIOR WRITTEN CONSENT OF COMPAL ELECTRONICS, INC.

Compal Electronics, Inc.

Title: **ICH7-M(3/4)**

Size: Custom | Document Number: IGL50/51 LA-3771 | Rev: 0.1

Date: 星期四, 六月 08, 2006 | Sheet 21 of 48

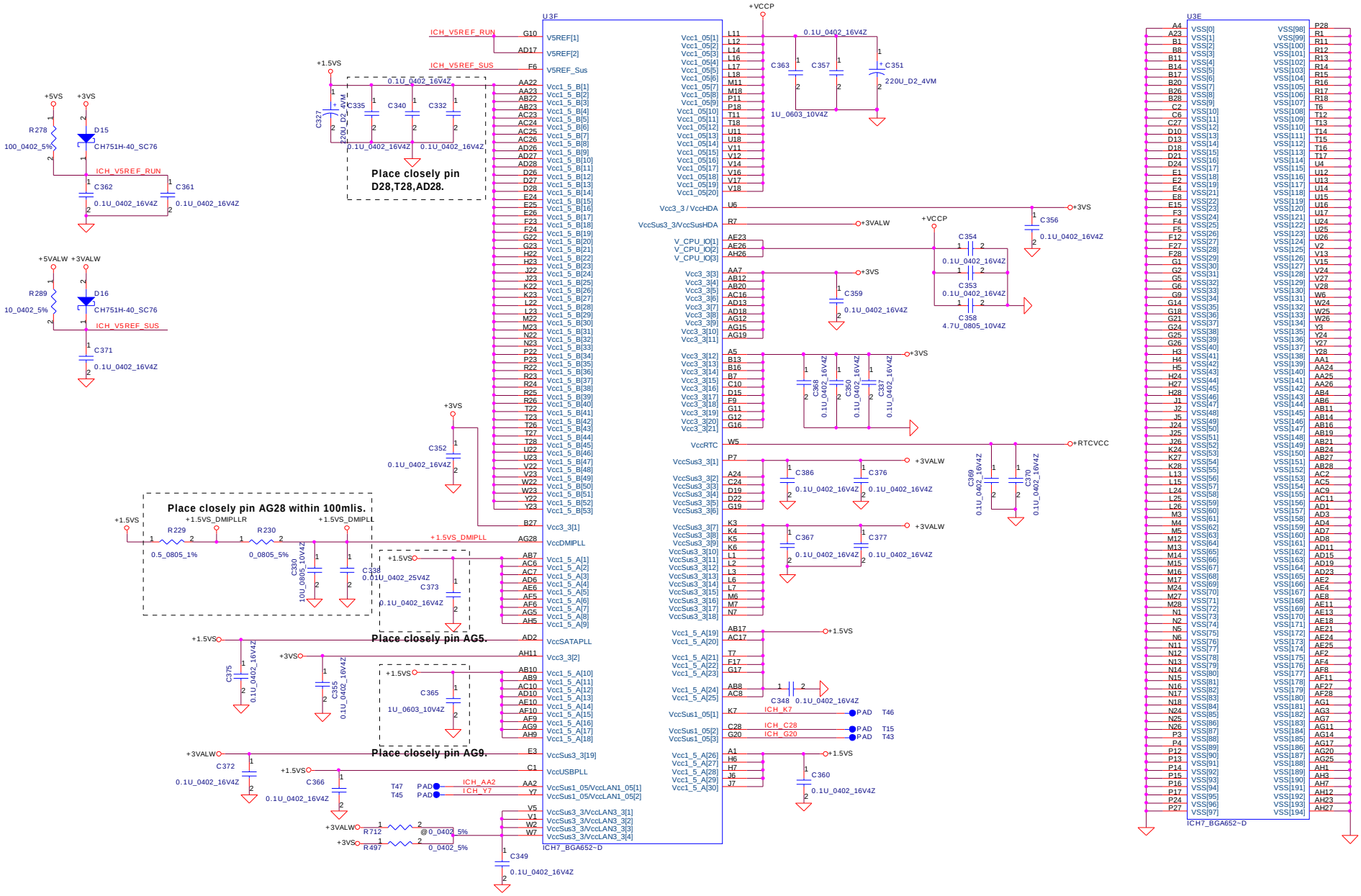

Security Classification	Compal Secret Data		
Issued Date	2005/10/06	Deciphered Date	2006/10/06

THIS SHEET OF ENGINEERING DRAWING IS THE PROPRIETARY PROPERTY OF COMPAL ELECTRONICS, INC. AND CONTAINS CONFIDENTIAL AND TRADE SECRET INFORMATION. THIS SHEET MAY NOT BE TRANSFERED FROM THE CUSTODY OF THE COMPETENT DIVISION OF R&D DEPARTMENT EXCEPT AS AUTHORIZED BY COMPAL ELECTRONICS, INC. NEITHER THIS SHEET NOR THE INFORMATION IT CONTAINS MAY BE USED BY OR DISCLOSED TO ANY THIRD PARTY WITHOUT PRIOR WRITTEN CONSENT OF COMPAL ELECTRONICS, INC.

Compal Electronics, Inc.

Title: **ICH7-M(4/4)**

Size	Document Number	Rev
Custom	IGL50/51 LA-3771	0.1

Date: 星期四, 六月 08, 2006 | Sheet 22 of 48

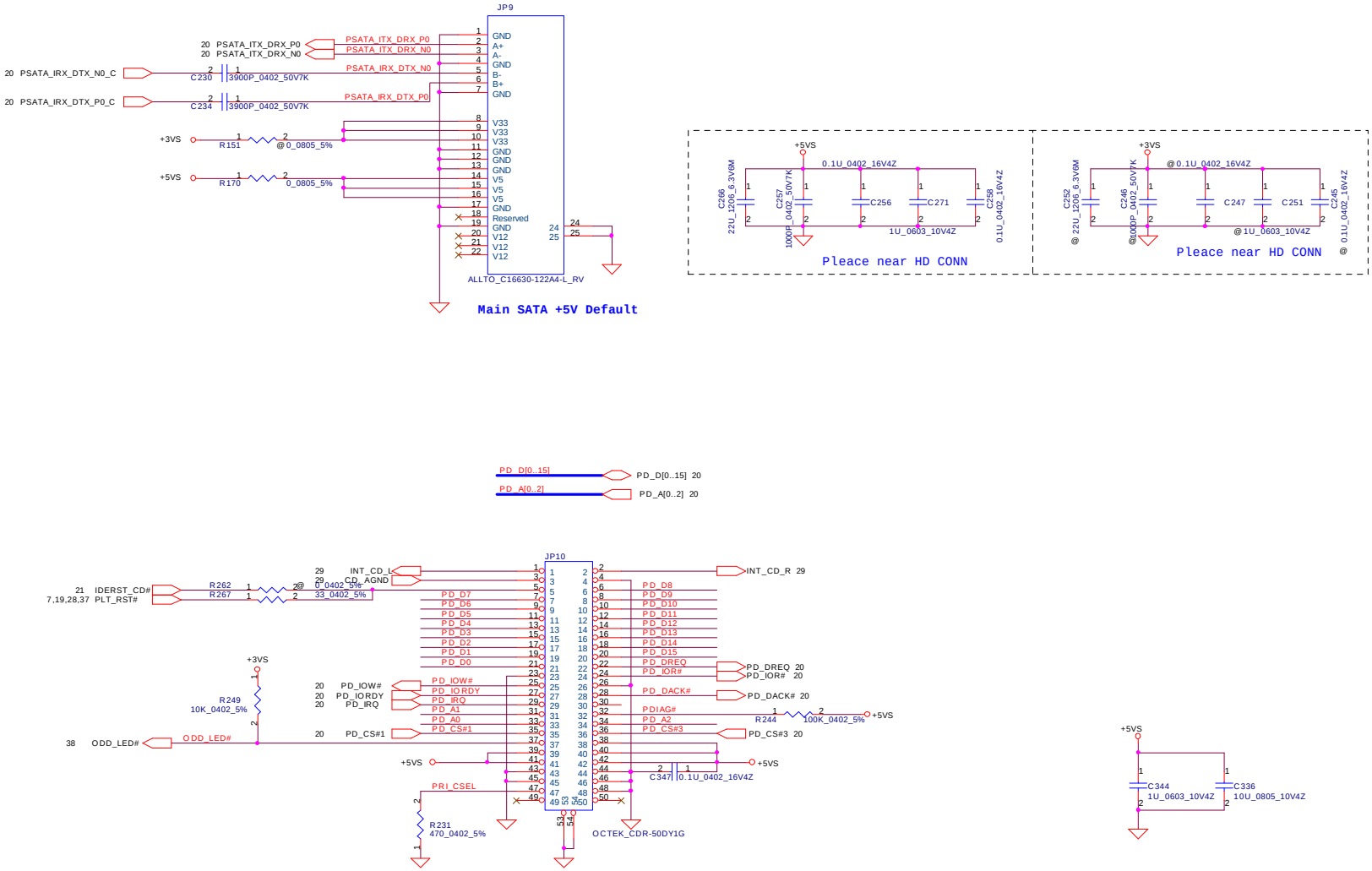

Security Classification	Compal Secret Data		
Issued Date	2005/10/06	Deciphered Date	2006/10/06

THIS SHEET OF ENGINEERING DRAWING IS THE PROPRIETARY PROPERTY OF COMPAL ELECTRONICS, INC. AND CONTAINS CONFIDENTIAL AND TRADE SECRET INFORMATION. THIS SHEET MAY NOT BE TRANSFERED FROM THE CUSTODY OF THE COMPETENT DIVISION OF R&D DEPARTMENT EXCEPT AS AUTHORIZED BY COMPAL ELECTRONICS, INC. NEITHER THIS SHEET NOR THE INFORMATION IT CONTAINS MAY BE USED BY OR DISCLOSED TO ANY THIRD PARTY WITHOUT PRIOR WRITTEN CONSENT OF COMPAL ELECTRONICS, INC.

Compal Electronics, Inc.

Title: **HDD & CDROM**

Size: Custom | Document Number: IGL50/51 LA-3771 | Rev: 0.1

Date: 星期四, 六月 08, 2006 | Sheet 23 of 48

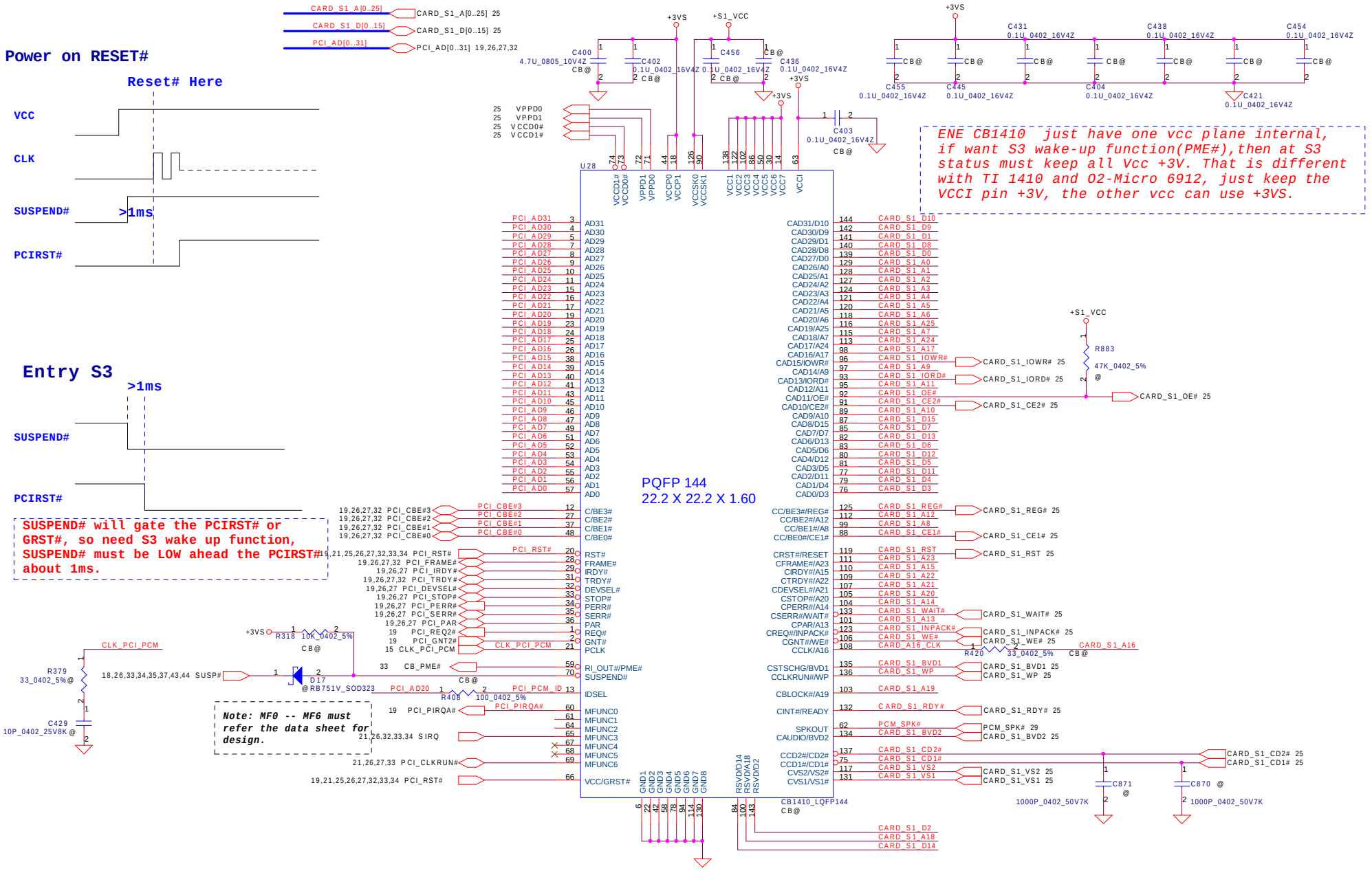

Security Classification	Compal Secret Data		
Issued Date	2005/10/06	Deciphered Date	2006/10/06

PROPRIETARY NOTE

THIS SHEET OF ENGINEERING DRAWING IS THE PROPRIETARY PROPERTY OF COMPAL ELECTRONICS, INC. AND CONTAINS CONFIDENTIAL AND TRADE SECRET INFORMATION. THIS SHEET MAY NOT BE TRANSFERED FROM THE CUSTODY OF THE COMPETENT DIVISION OF R&D DEPARTMENT EXCEPT AS AUTHORIZED BY COMPAL ELECTRONICS, INC. NEITHER THIS SHEET NOR THE INFORMATION IT CONTAINS MAY BE USED BY OR DISCLOSED TO ANY THIRD PARTY WITHOUT PRIOR WRITTEN CONSENT OF COMPAL ELECTRONICS, INC.

Compal Electronics, Inc.

Title: **CB ENE1410(One Solt)**

Size: Custom | Document Number: ***IGL50/51 LA-3771*** | Rev: 0.1

Date: 星期四, 請?08, 2006 | Sheet 24 of 48

PCMCIA Power Controller

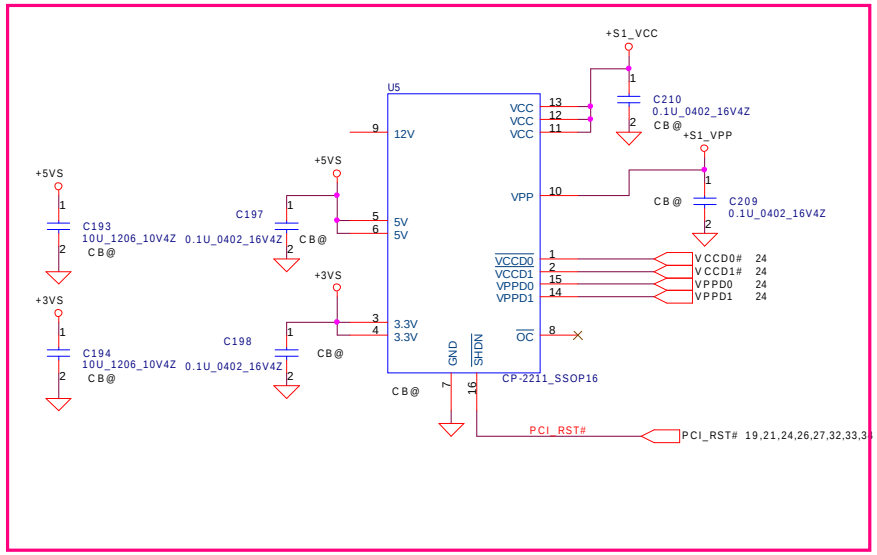

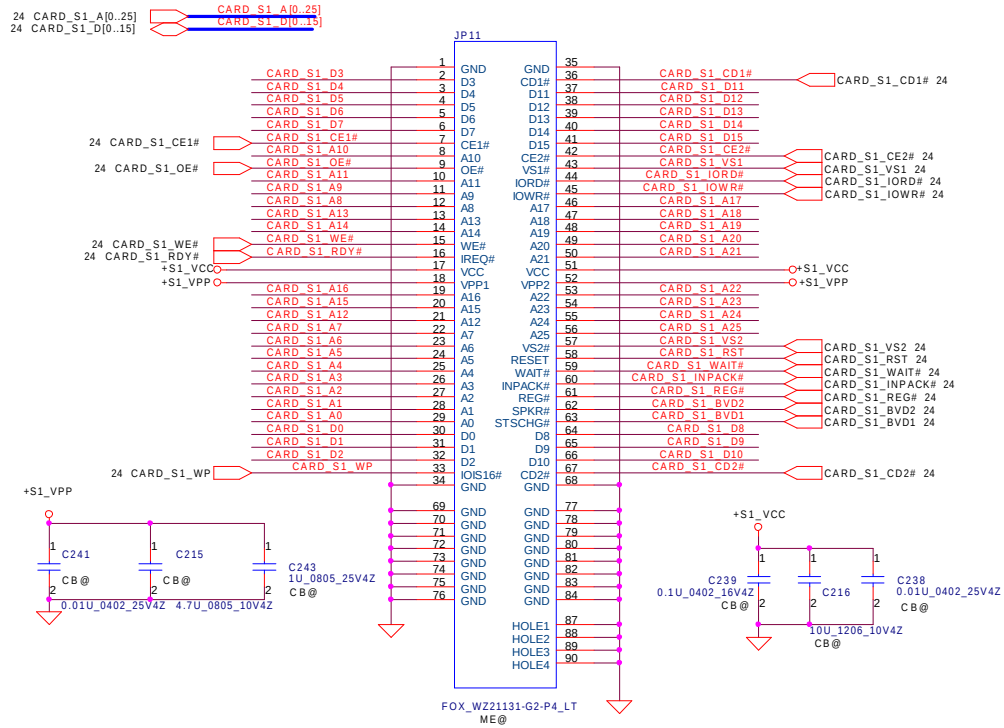

Security Classification	Compal Secret Data		
Issued Date	2005/10/06	Deciphered Date	2006/10/06

THIS SHEET OF ENGINEERING DRAWING IS THE PROPRIETARY PROPERTY OF COMPAL ELECTRONICS, INC. AND CONTAINS CONFIDENTIAL AND TRADE SECRET INFORMATION. THIS SHEET MAY NOT BE TRANSFERED FROM THE CUSTODY OF THE COMPETENT DIVISION OF R&D DEPARTMENT EXCEPT AS AUTHORIZED BY COMPAL ELECTRONICS, INC. NEITHER THIS SHEET NOR THE INFORMATION IT CONTAINS MAY BE USED BY OR DISCLOSED TO ANY THIRD PARTY WITHOUT PRIOR WRITTEN CONSENT OF COMPAL ELECTRONICS, INC.

Compal Electronics, Inc.

Title: **CardBus Socket**

Size: Custom | Document Number: ***IGL50/51 LA-3771*** | Rev: 0.1

Date: 星期四, 請?08, 2006 | Sheet 25 of 48

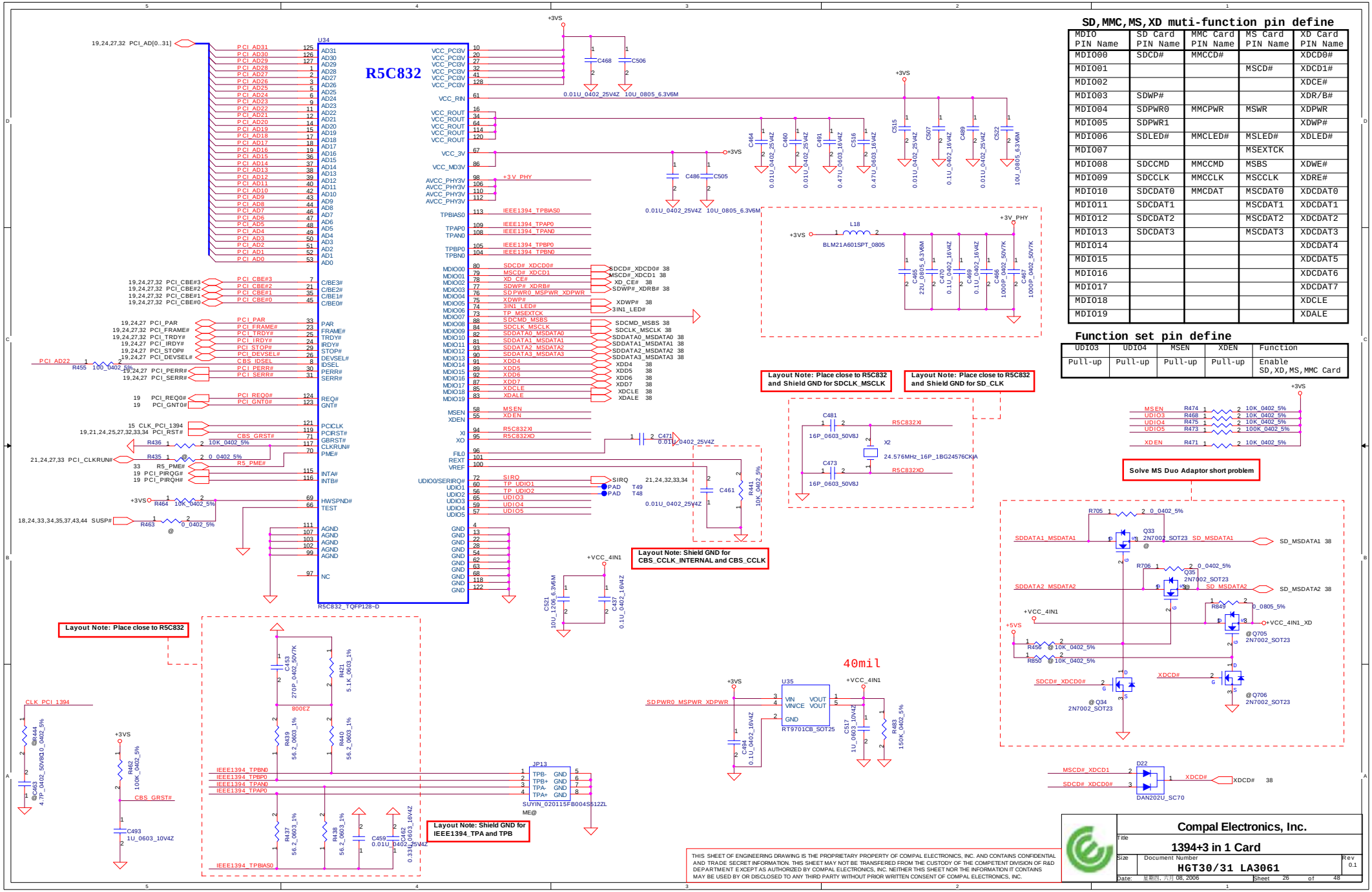

SD,MMC,MS,XD muti-function pin define

MDIO PIN Name	SD Card PIN Name	MMC Card PIN Name	MS Card PIN Name	XD Card PIN Name
MDIO00	SDCD#	MMCCD#		XDCD0#
MDIO01			MSCD#	XDCD1#
MDIO02				XDCE#
MDIO03	SDWP#			XDR/B#
MDIO04	SDPWR0	MMCPWR	MSWR	XDPWR
MDIO05	SDPWR1			XDWP#
MDIO06	SDLED#	MMCLED#	MSLED#	XDLED#
MDIO07			MSEXTCK	
MDIO08	SDCCMD	MMCCMD	MSBS	XDWE#
MDIO09	SDCCLK	MMCCLK	MSCCLK	XDRE#
MDIO10	SDCDAT0	MMCDAT	MSCDAT0	XDCDAT0
MDIO11	SDCDAT1		MSCDAT1	XDCDAT1
MDIO12	SDCDAT2		MSCDAT2	XDCDAT2
MDIO13	SDCDAT3		MSCDAT3	XDCDAT3
MDIO14				XDCDAT4
MDIO15				XDCDAT5
MDIO16				XDCDAT6
MDIO17				XDCDAT7
MDIO18				XDCLE
MDIO19				XDALE

Function set pin define

UDIO3	UDIO4	MSEN	XDEN	Function
Pull-up	Pull-up	Pull-up	Pull-up	Enable SD,XD,MS,MMC Card

THIS SHEET OF ENGINEERING DRAWING IS THE PROPRIETARY PROPERTY OF COMPAL ELECTRONICS, INC. AND CONTAINS CONFIDENTIAL AND TRADE SECRET INFORMATION. THIS SHEET MAY NOT BE TRANSFERED FROM THE CUSTODY OF THE COMPETENT DIVISION OF R&D DEPARTMENT EXCEPT AS AUTHORIZED BY COMPAL ELECTRONICS, INC. NEITHER THIS SHEET NOR THE INFORMATION IT CONTAINS MAY BE USED BY OR DISCLOSED TO ANY THIRD PARTY WITHOUT PRIOR WRITTEN CONSENT OF COMPAL ELECTRONICS, INC.

Compal Electronics, Inc.

Title: **1394+3 in 1 Card**

Size: | Document Number: **HGT30/31 LA3061** | Rev: 0.1

Date: 星期四, 六月 08, 2006 | Sheet 26 of 48

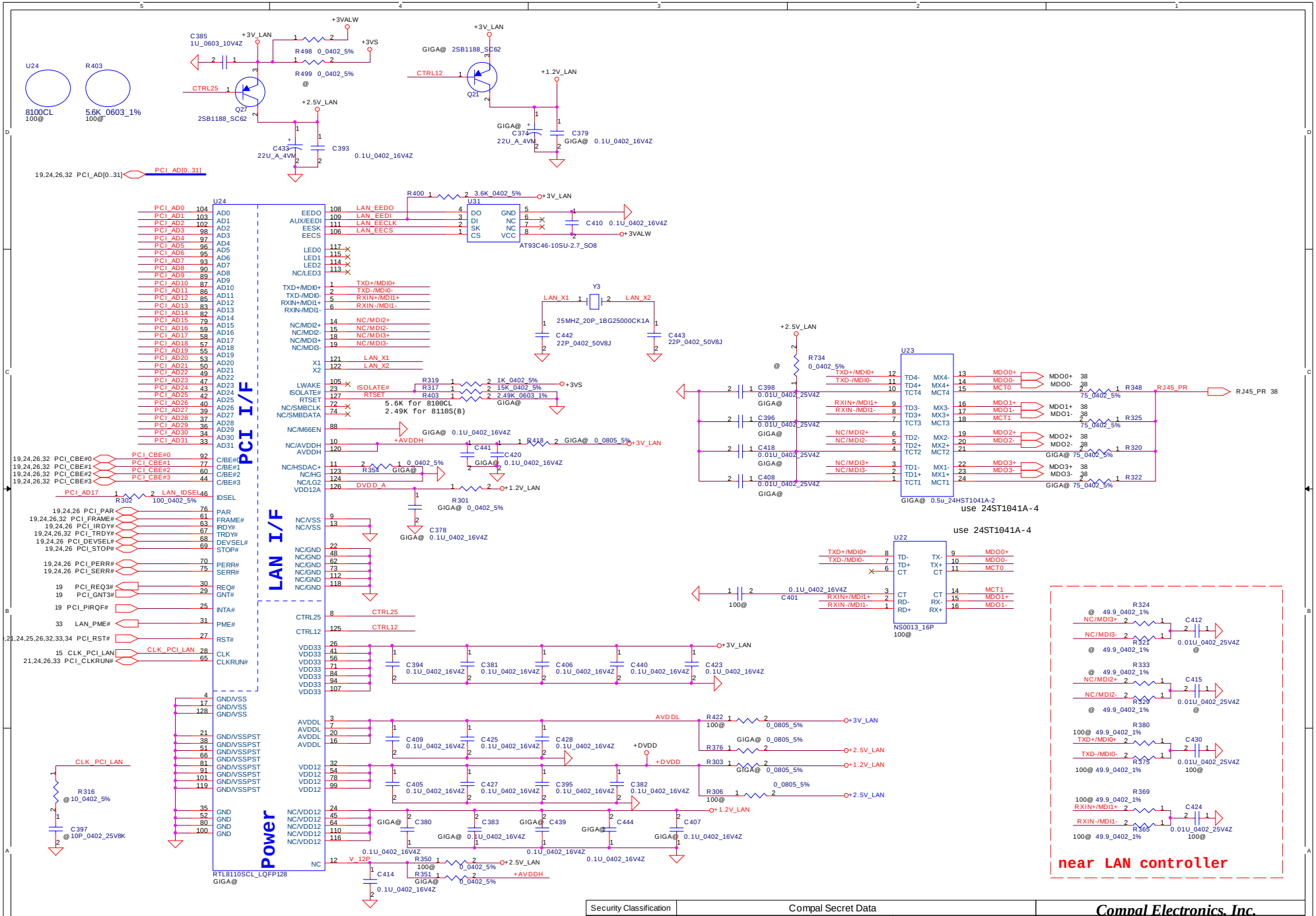

Security Classification	Compal Secret Data		
Issued Date	2005/10/06	Deciphered Date	2006/10/06

THIS SHEET OF ENGINEERING DRAWING IS THE PROPRIETARY PROPERTY OF COMPAL ELECTRONICS, INC. AND CONTAINS CONFIDENTIAL AND TRADE SECRET INFORMATION. THIS SHEET MAY NOT BE TRANSFERED FROM THE CUSTODY OF THE COMPETENT DIVISION OF R&D DEPARTMENT EXCEPT AS AUTHORIZED BY COMPAL ELECTRONICS, INC. NEITHER THIS SHEET NOR THE INFORMATION IT CONTAINS MAY BE USED BY OR DISCLOSED TO ANY THIRD PARTY WITHOUT PRIOR WRITTEN CONSENT OF COMPAL ELECTRONICS, INC.

Compal Electronics, Inc.

Title: **LAN CONTROLLER**

Size: Custom | Document Number: IGL50/51 LA-3771 | Rev: 0.1

Date: 星期四, 六月 08, 2006 | Sheet 27 of 48

Mini-Express Card(Slot 1-WLAN)

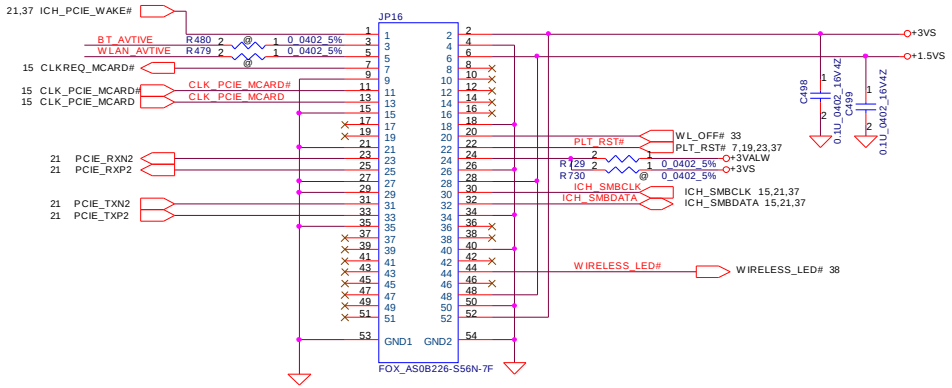

Mini-Express Card(Slot 2-WLAN)

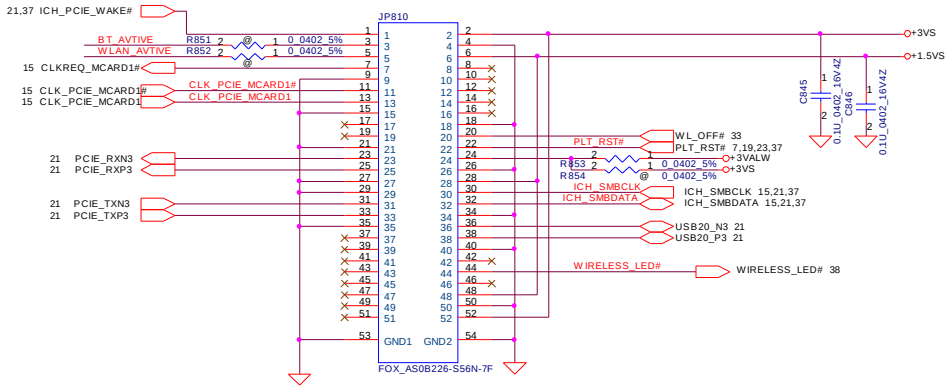

MDC CONN.

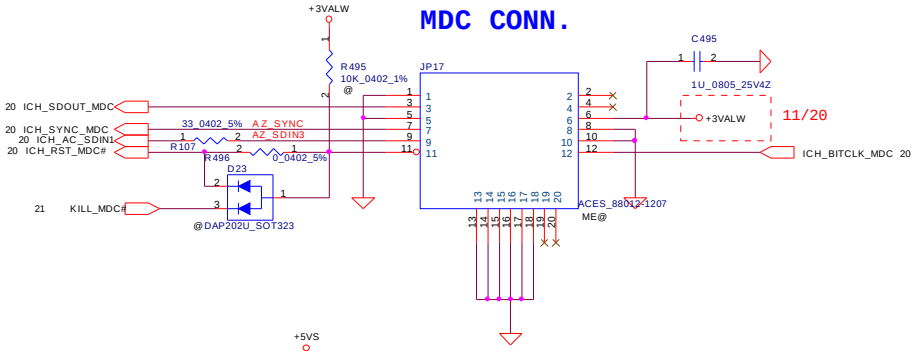

BT MODULE CONN

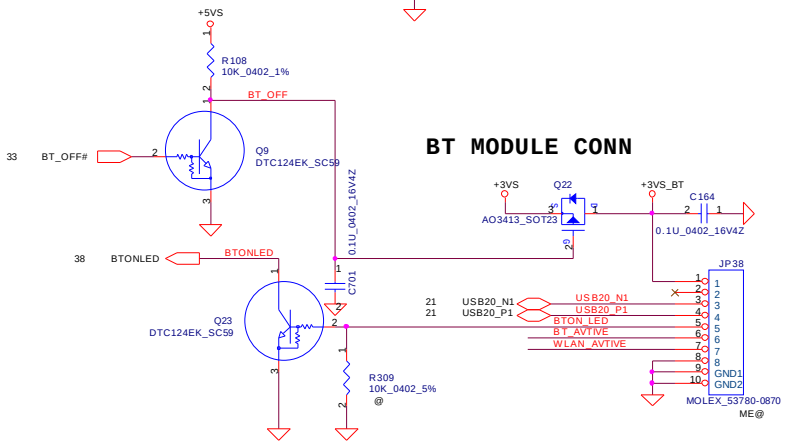

Security Classification	Compal Secret Data		
Issued Date	2005/10/06	Deciphered Date	2006/10/06

THIS SHEET OF ENGINEERING DRAWING IS THE PROPRIETARY PROPERTY OF COMPAL ELECTRONICS, INC. AND CONTAINS CONFIDENTIAL AND TRADE SECRET INFORMATION. THIS SHEET MAY NOT BE TRANSFERED FROM THE CUSTODY OF THE COMPETENT DIVISION OF R&D DEPARTMENT EXCEPT AS AUTHORIZED BY COMPAL ELECTRONICS, INC. NEITHER THIS SHEET NOR THE INFORMATION IT CONTAINS MAY BE USED BY OR DISCLOSED TO ANY THIRD PARTY WITHOUT PRIOR WRITTEN CONSENT OF COMPAL ELECTRONICS, INC.

Compal Electronics, Inc.

Title: **Mini Card / MDC CONN**

Size: Custom | Document Number: IGL50/51 LA-3771 | Rev: 0.1

Date: 星期四, 六月 08, 2006 | Sheet 28 of 48

AC97 Codec

28.7K for Module Design (VDDA = 4.702)

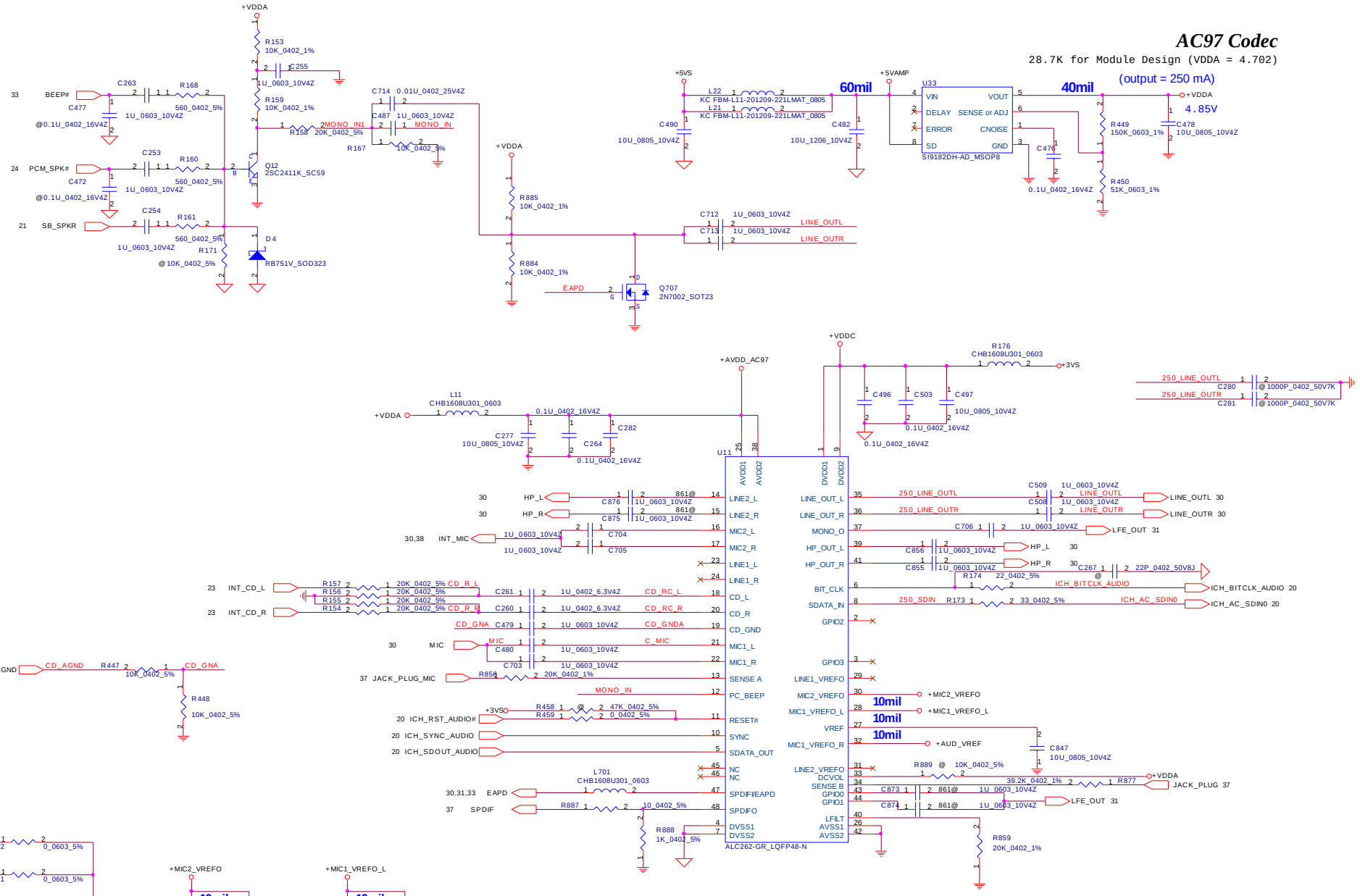

Security Classification	Compal Secret Data		
Issued Date	2005/10/06	Deciphered Date	2006/10/06

THIS SHEET OF ENGINEERING DRAWING IS THE PROPRIETARY PROPERTY OF COMPAL ELECTRONICS, INC. AND CONTAINS CONFIDENTIAL AND TRADE SECRET INFORMATION. THIS SHEET MAY NOT BE TRANSFERED FROM THE CUSTODY OF THE COMPETENT DIVISION OF R&D DEPARTMENT EXCEPT AS AUTHORIZED BY COMPAL ELECTRONICS, INC. NEITHER THIS SHEET NOR THE INFORMATION IT CONTAINS MAY BE USED BY OR DISCLOSED TO ANY THIRD PARTY WITHOUT PRIOR WRITTEN CONSENT OF COMPAL ELECTRONICS, INC.

Compal Electronics, Inc.

Title: **ALC262 Codec**

Size: Custom | Document Number: IGL50/51 LA-3771 | Rev: 0.1

Date: 星期四, 六月 08, 2006 | Sheet 29 of 48

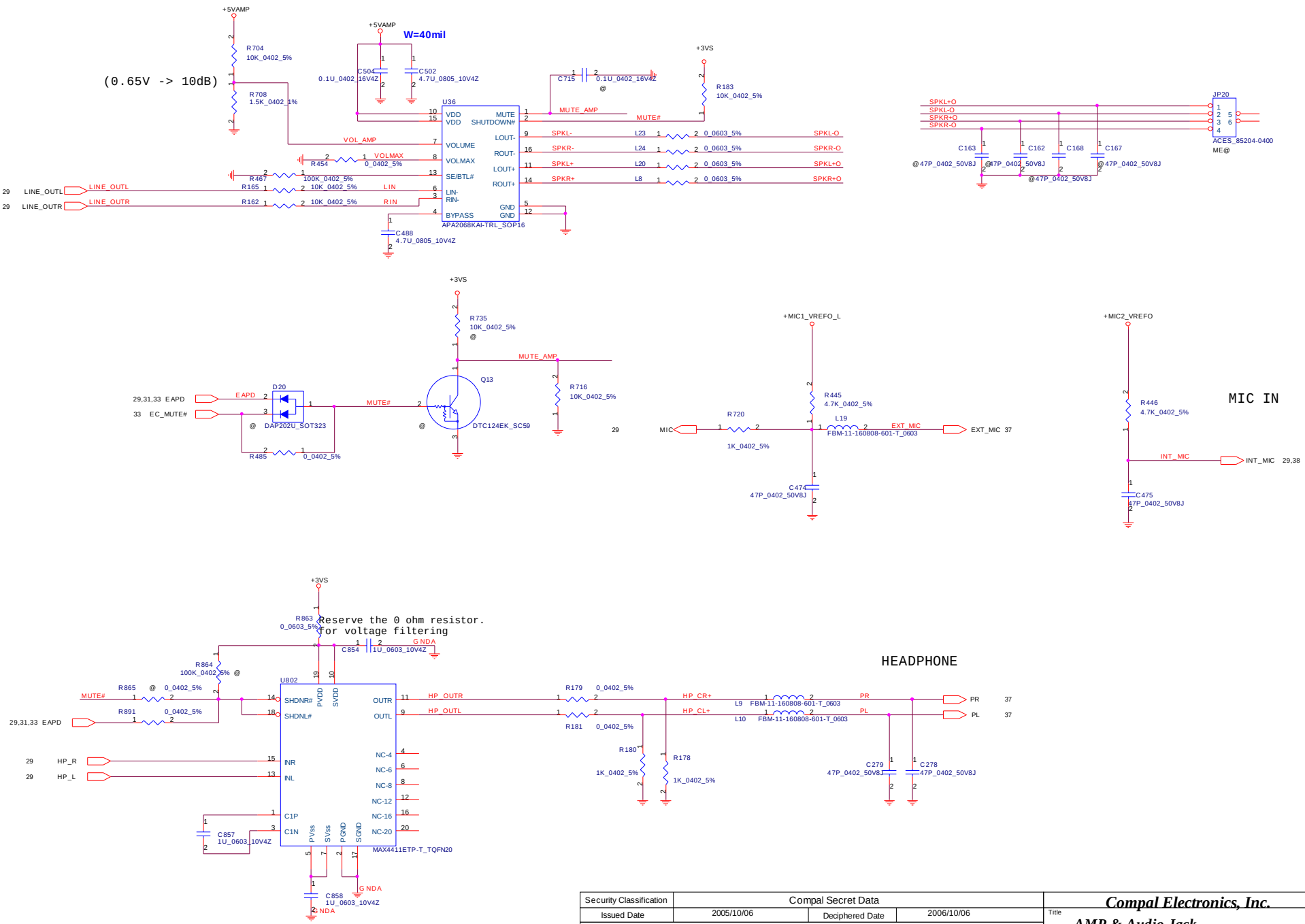

Security Classification	Compal Secret Data		
Issued Date	2005/10/06	Deciphered Date	2006/10/06

THIS SHEET OF ENGINEERING DRAWING IS THE PROPRIETARY PROPERTY OF COMPAL ELECTRONICS, INC. AND CONTAINS CONFIDENTIAL AND TRADE SECRET INFORMATION. THIS SHEET MAY NOT BE TRANSFERED FROM THE CUSTODY OF THE COMPETENT DIVISION OF R&D DEPARTMENT EXCEPT AS AUTHORIZED BY COMPAL ELECTRONICS, INC. NEITHER THIS SHEET NOR THE INFORMATION IT CONTAINS MAY BE USED BY OR DISCLOSED TO ANY THIRD PARTY WITHOUT PRIOR WRITTEN CONSENT OF COMPAL ELECTRONICS, INC.

Compal Electronics, Inc.

Title: **AMP & Audio Jack**

Size: Custom | Document Number: IGL50/51 LA-3771 | Rev: 0.1

Date: 星期四, 六月 08, 2006 | Sheet 30 of 48

SUBWOOFER (Reserved for C38)

WOOFER@

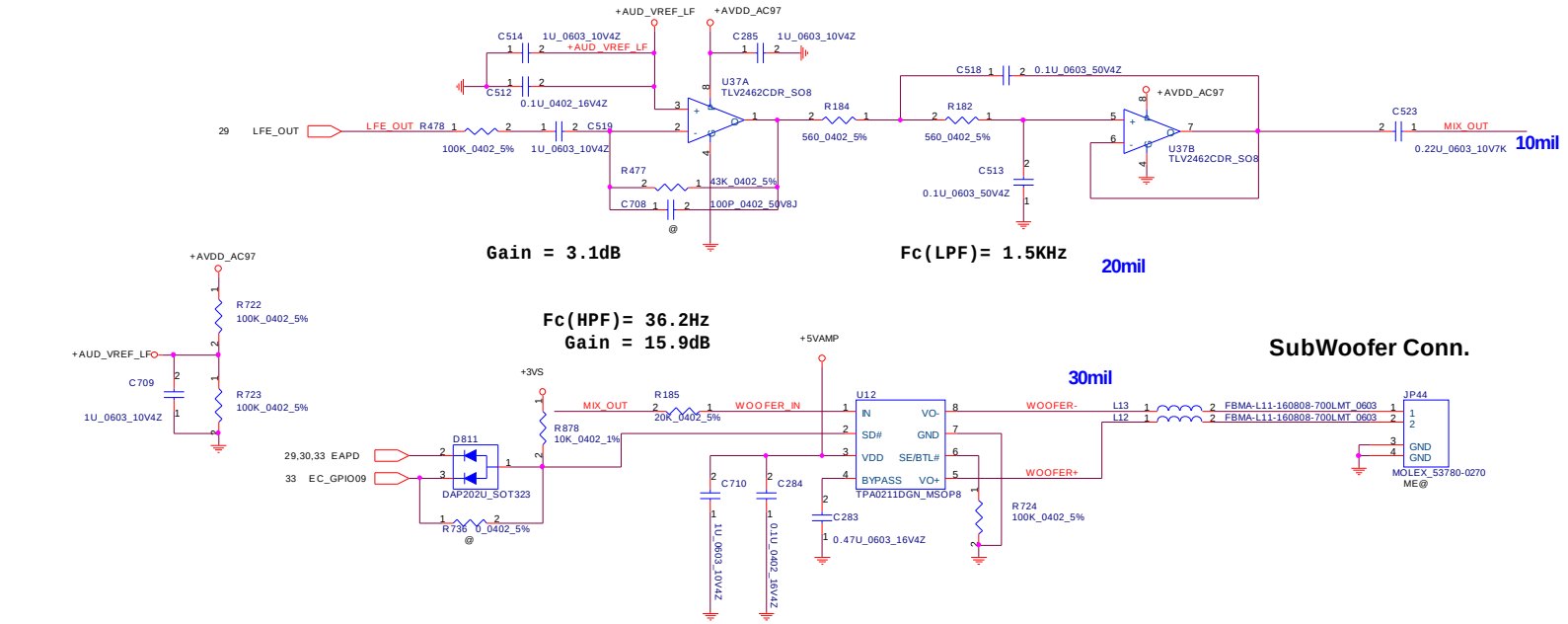

USB Port

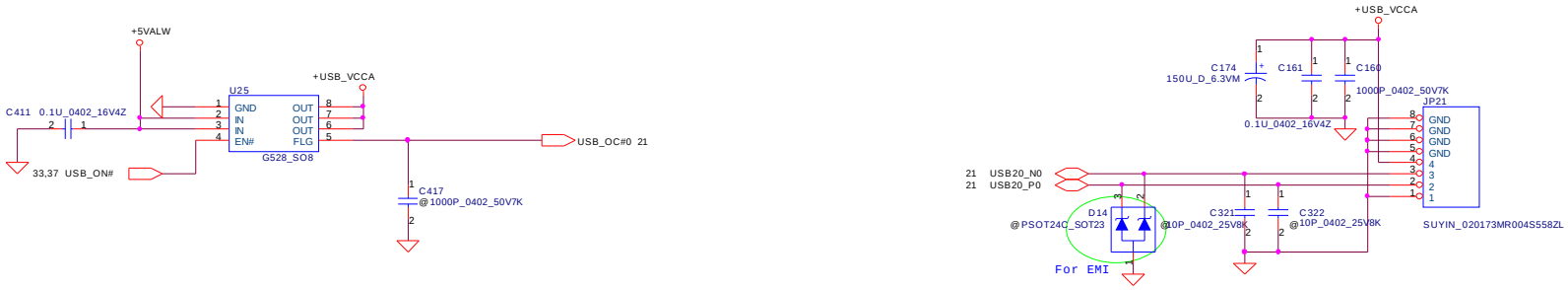

Security Classification	Compal Secret Data		
Issued Date	2005/10/06	Deciphered Date	2006/10/06

THIS SHEET OF ENGINEERING DRAWING IS THE PROPRIETARY PROPERTY OF COMPAL ELECTRONICS, INC. AND CONTAINS CONFIDENTIAL AND TRADE SECRET INFORMATION. THIS SHEET MAY NOT BE TRANSFERED FROM THE CUSTODY OF THE COMPETENT DIVISION OF R&D DEPARTMENT EXCEPT AS AUTHORIZED BY COMPAL ELECTRONICS, INC. NEITHER THIS SHEET NOR THE INFORMATION IT CONTAINS MAY BE USED BY OR DISCLOSED TO ANY THIRD PARTY WITHOUT PRIOR WRITTEN CONSENT OF COMPAL ELECTRONICS, INC.

Compal Electronics, Inc.

Title: **Bluetooth & USB CONN.**

Size: Custom | Document Number: *IGL50/51 LA-3771* | Rev: 0.1

Date: 星期四, 六月 08, 2006 | Sheet 31 of 48

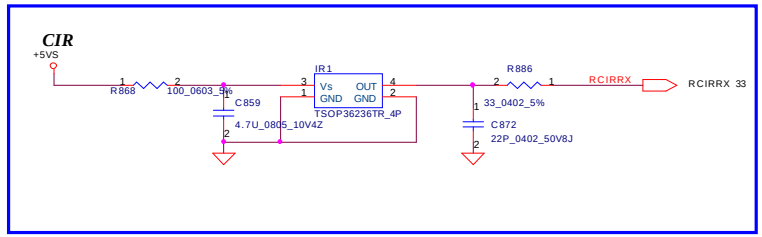

INT_KBD CONN.(TYPE "D" KB)

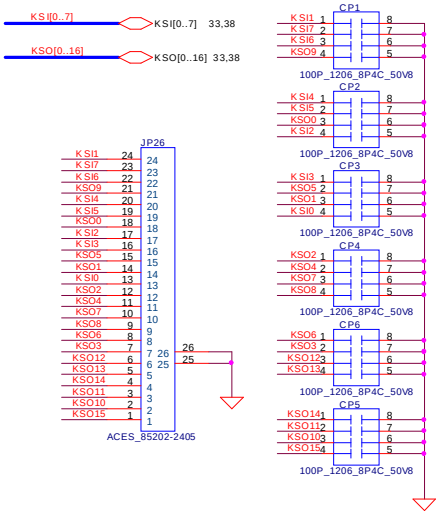

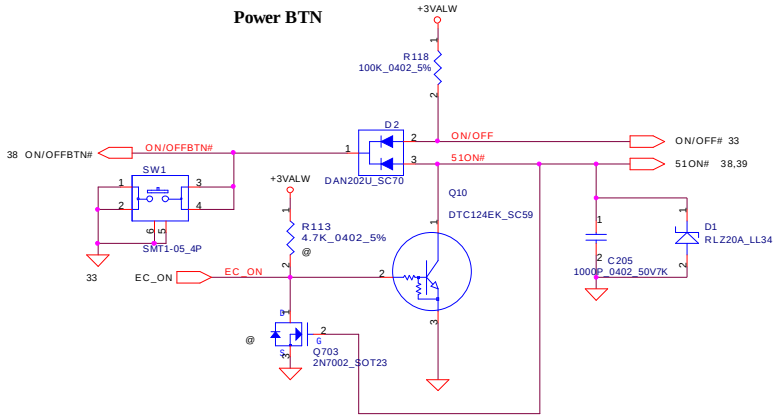

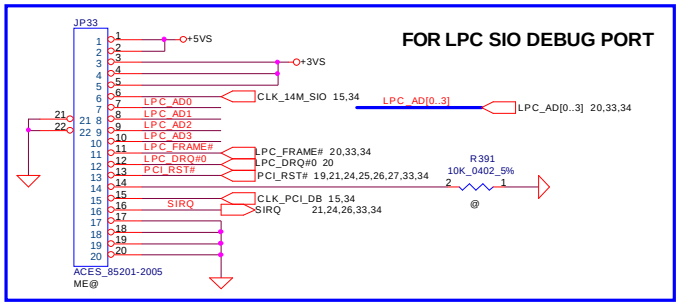

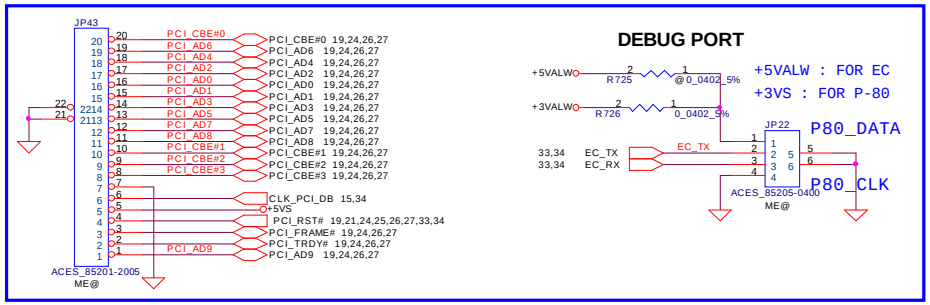

Security Classification	Compal Secret Data		
Issued Date	2005/10/06	Deciphered Date	2006/10/06

THIS SHEET OF ENGINEERING DRAWING IS THE PROPRIETARY PROPERTY OF COMPAL ELECTRONICS, INC. AND CONTAINS CONFIDENTIAL AND TRADE SECRET INFORMATION. THIS SHEET MAY NOT BE TRANSFERED FROM THE CUSTODY OF THE COMPETENT DIVISION OF R&D DEPARTMENT EXCEPT AS AUTHORIZED BY COMPAL ELECTRONICS, INC. NEITHER THIS SHEET NOR THE INFORMATION IT CONTAINS MAY BE USED BY OR DISCLOSED TO ANY THIRD PARTY WITHOUT PRIOR WRITTEN CONSENT OF COMPAL ELECTRONICS, INC.

Compal Electronics, Inc.

Title: **KBD,ON/OFF,T/P,LED/B,DEBUG**

Size	Document Number	Rev
Custom	IGL50/51 LA-3771	0.1

Date: 星期四, 六月 08, 2006 | Sheet 32 of 48

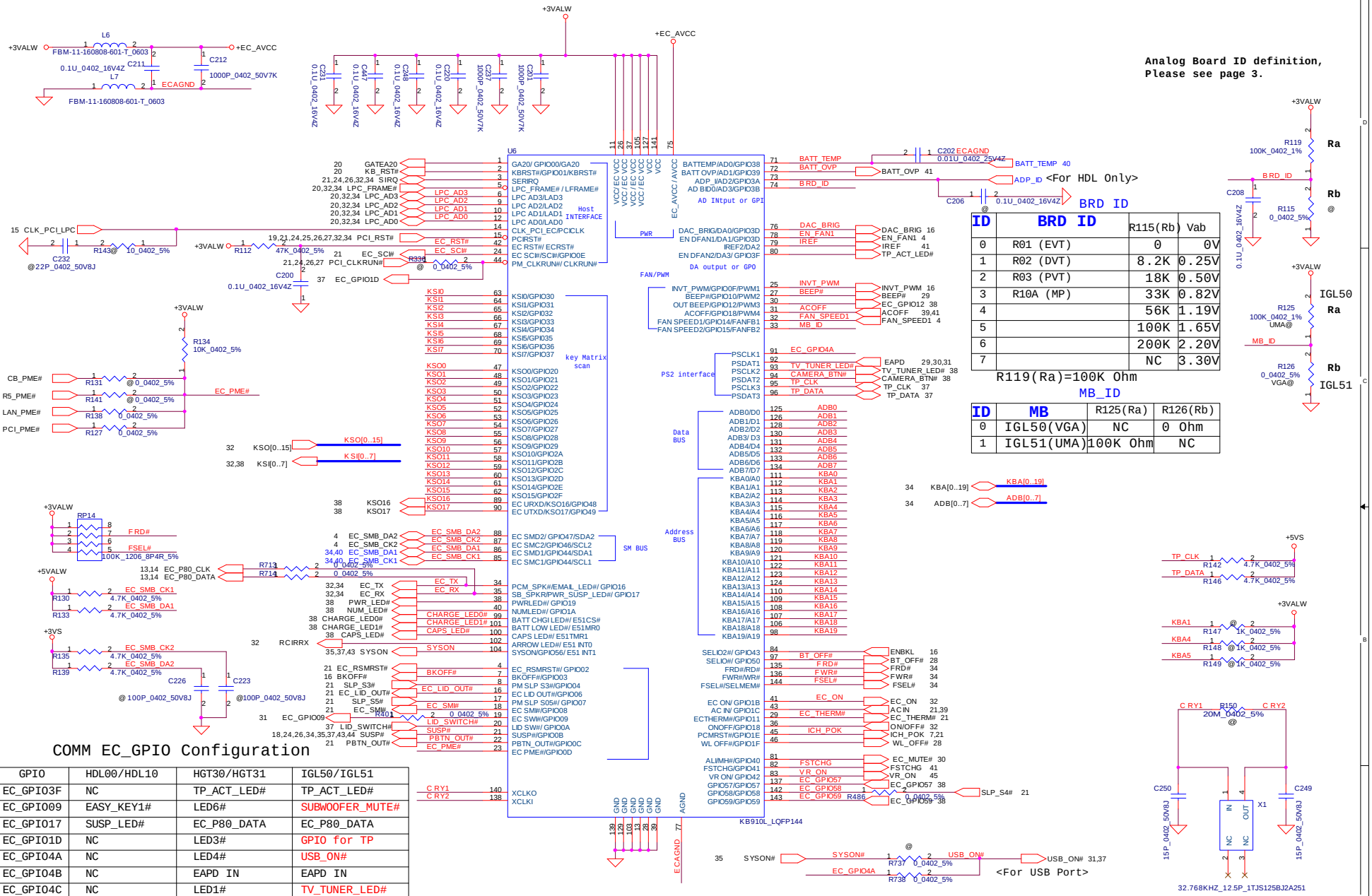

ID	BRD ID	R115(Rb)	Vab
0	R01 (EVT)	0	0V
1	R02 (DVT)	8.2K	0.25V
2	R03 (PVT)	18K	0.50V
3	R10A (MP)	33K	0.82V
4		56K	1.19V
5		100K	1.65V
6		200K	2.20V
7		NC	3.30V

ID	MB	R125(Ra)	R126(Rb)
0	IGL50(VGA)	NC	0 Ohm
1	IGL51(UMA)	100K Ohm	NC

PIN	GPIO	HDL00/HDL10	HGT30/HGT31	IGL50/IGL51
80	EC_GPIO3F	NC	TP_ACT_LED#	TP_ACT_LED#
19	EC_GPIO09	EASY_KEY1#	LED6#	SUBWOOFER_MUTE#
35	EC_GPIO17	SUSP_LED#	EC_P80_DATA	EC_P80_DATA
44	EC_GPIO1D	NC	LED3#	GPIO for TP
91	EC_GPIO4A	NC	LED4#	USB_ON#
92	EC_GPIO4B	NC	EAPD IN	EAPD IN
93	EC_GPIO4C	NC	LED1#	TV_TUNER_LED#
94	EC_GPIO4D	NC	LED2#	CAMERA_BTN#
102	EC_GPIO55	NC	LED5#	RCIRRX
97	EC_GPIO50	MEDIA#	BT_OFF#	BT_OFF#
137	EC_GPIO57	VOL_UP#	NOVO_BTN#	NOVO_BTN#
142	EC_GPIO58	VOL_DOWN#	SLP_S4#	SLP_S4#
143	EC_GPIO59	KILL_SW#	WIRE_LAN_BTN#	RF_BTN#
30	EC_GPIO12	AMP_MUTE	TP_LOCK_LED#	SUBWOOFER_BTN#

Security Classification	Compal Secret Data		
Issued Date	2005/10/06	Deciphered Date	2006/10/06

THIS SHEET OF ENGINEERING DRAWING IS THE PROPRIETARY PROPERTY OF COMPAL ELECTRONICS, INC. AND CONTAINS CONFIDENTIAL AND TRADE SECRET INFORMATION. THIS SHEET MAY NOT BE TRANSFERED FROM THE CUSTODY OF THE COMPETENT DIVISION OF R&D DEPARTMENT EXCEPT AS AUTHORIZED BY COMPAL ELECTRONICS, INC. NEITHER THIS SHEET NOR THE INFORMATION IT CONTAINS MAY BE USED BY OR DISCLOSED TO ANY THIRD PARTY WITHOUT PRIOR WRITTEN CONSENT OF COMPAL ELECTRONICS, INC.

Compal Electronics, Inc.

Title: ENE-KB910L

Size: Custom | Document Number: IGL50/51 LA-3771 | Rev: 0.1

Date: 星期四, 六月 08, 2006 | Sheet 33 of 48

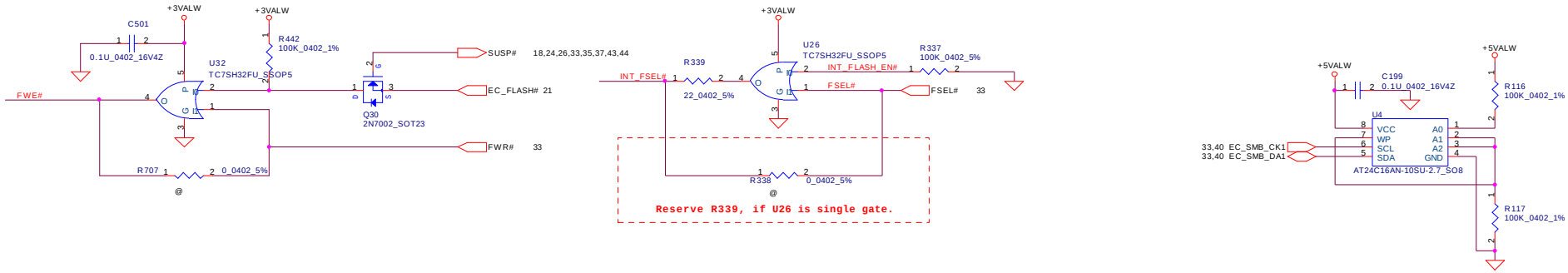

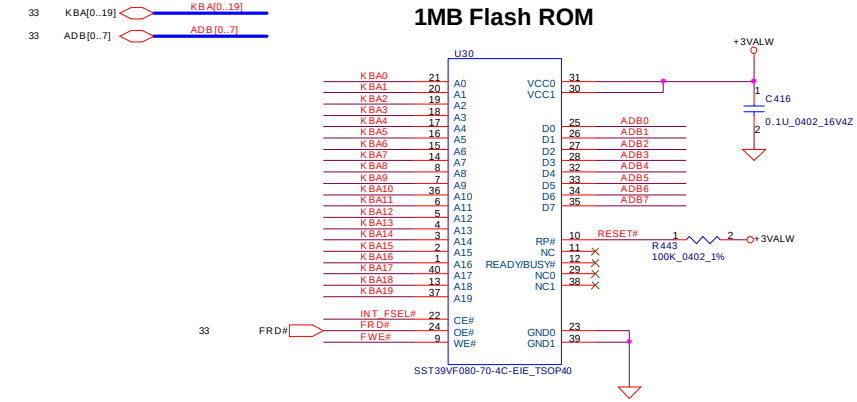

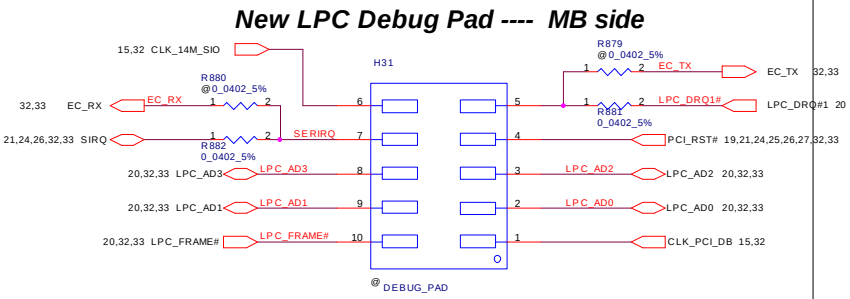

Under DDR ME Assigment Area

Keep Resistor near Debug Pad and in the same side

Standard side DIMM ---- Pin 1 near DIMM

Reverse side DIMM ---- Pin 1 keep away DIMM

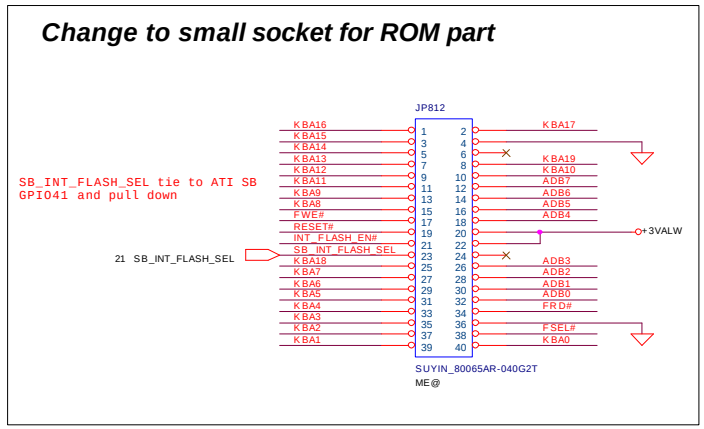

Security Classification	Compal Secret Data		
Issued Date	2005/10/06	Deciphered Date	2006/10/06

THIS SHEET OF ENGINEERING DRAWING IS THE PROPRIETARY PROPERTY OF COMPAL ELECTRONICS, INC. AND CONTAINS CONFIDENTIAL AND TRADE SECRET INFORMATION. THIS SHEET MAY NOT BE TRANSFERED FROM THE CUSTODY OF THE COMPETENT DIVISION OF R&D DEPARTMENT EXCEPT AS AUTHORIZED BY COMPAL ELECTRONICS, INC. NEITHER THIS SHEET NOR THE INFORMATION IT CONTAINS MAY BE USED BY OR DISCLOSED TO ANY THIRD PARTY WITHOUT PRIOR WRITTEN CONSENT OF COMPAL ELECTRONICS, INC.

Compal Electronics, Inc.

Title: BIOS & EC I/O Port

Size: Custom | Document Number: IGL50/51 LA-3771 | Rev: 0.1

Date: 星期四, 六月 08, 2006 | Sheet 34 of 48

+5VALW to +5VS Transfer

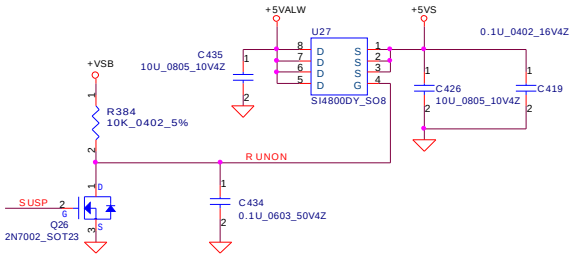

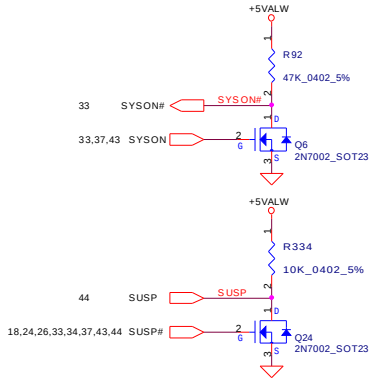

+3VALW to +3VS Transfer

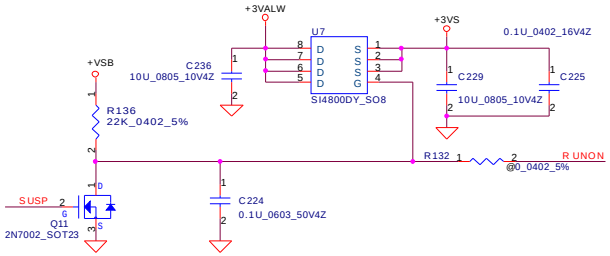

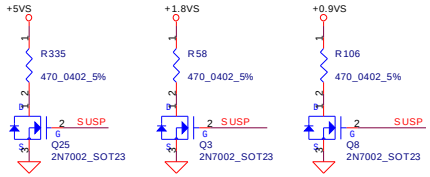

+1.8V to +1.8VS Transfer

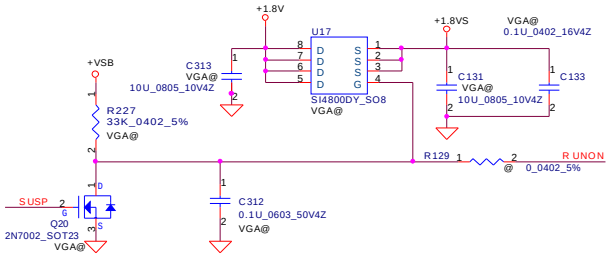

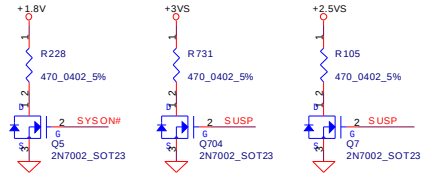

Security Classification	Compal Secret Data		
Issued Date	2005/10/06	Deciphered Date	2006/10/06

THIS SHEET OF ENGINEERING DRAWING IS THE PROPRIETARY PROPERTY OF COMPAL ELECTRONICS, INC. AND CONTAINS CONFIDENTIAL AND TRADE SECRET INFORMATION. THIS SHEET MAY NOT BE TRANSFERRED FROM THE CUSTODY OF THE COMPETENT DIVISION OF R&D DEPARTMENT EXCEPT AS AUTHORIZED BY COMPAL ELECTRONICS, INC. NEITHER THIS SHEET NOR THE INFORMATION IT CONTAINS MAY BE USED BY OR DISCLOSED TO ANY THIRD PARTY WITHOUT PRIOR WRITTEN CONSENT OF COMPAL ELECTRONICS, INC.

Compal Electronics, Inc.

Title: **DC/DC Circuit**

Size: Custom | Document Number: IGL50/51 LA-3771 | Rev: 0.1

Date: 星期四, 六月 08, 2006 | Sheet 35 of 48

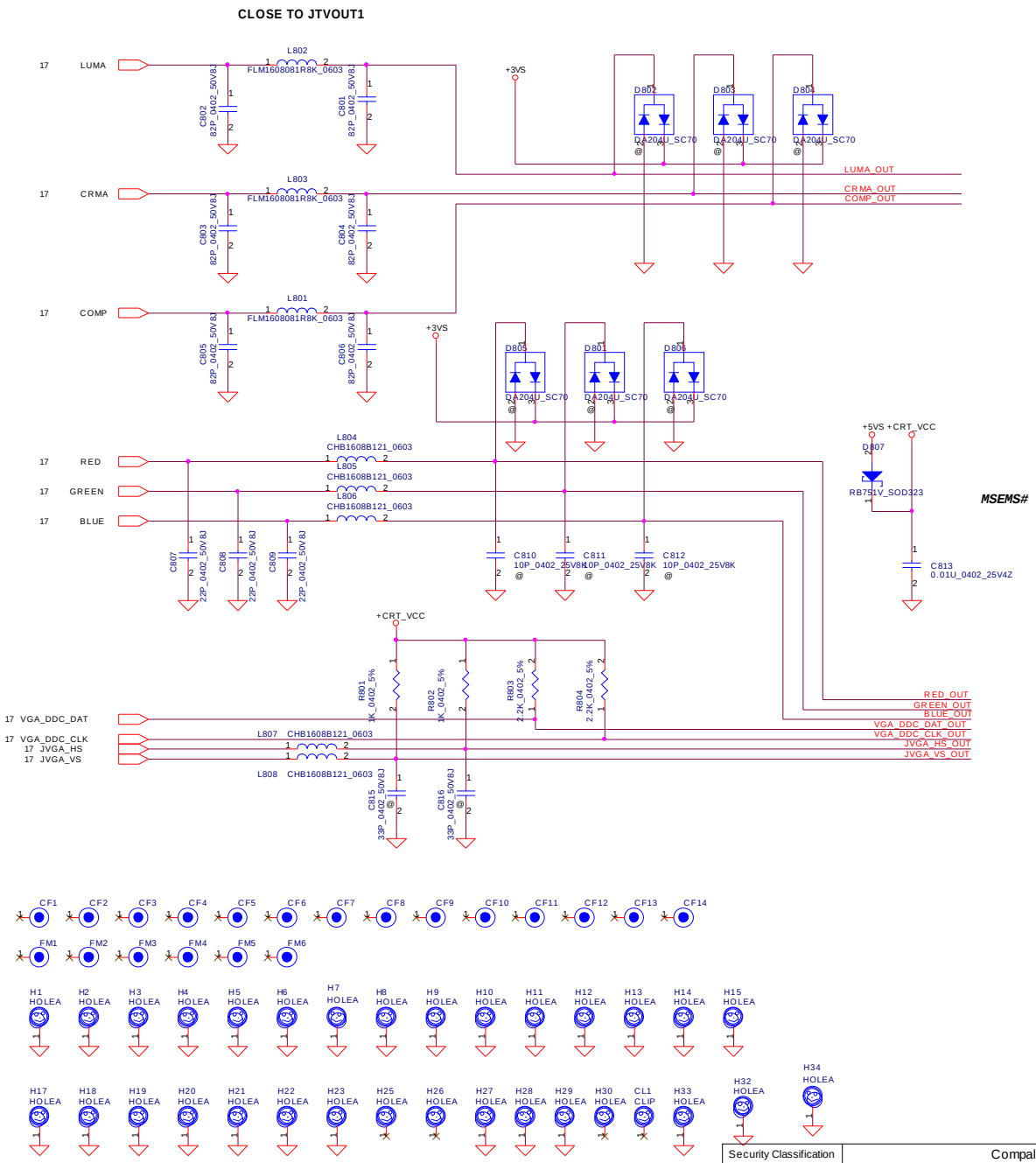

VGA I/O PORT Connector

S-VIDEO

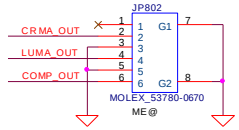

DSUB

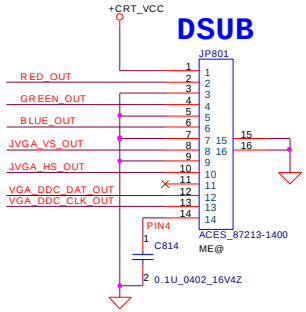

PIN ASSIGMENT

PIN	D-SUB	FUNCTION	PIN	SVIDEO	FUNCTION
1	9	+CRT_VCC	1	1	NC
2	1	RED	2	4	CRMA
3	6	GND	3	2	GND
4	2	GREEN	4	3	LUMA
5	7	GND	5	5	GND
6	3	BLUE	6	6	CVBS
7	8	GND			
8	14	VSYNC			
9	10	GND			
10	13	HSYNC			
11	11	SENSE			
12	12	SM_DAT			
13	15	SM_CLK			
14	4	PIN4			

Security Classification	Compal Secret Data		
Issued Date	2005/03/10	Deciphered Date	2006/03/10

THIS SHEET OF ENGINEERING DRAWING IS THE PROPRIETARY PROPERTY OF COMPAL ELECTRONICS, INC. AND CONTAINS CONFIDENTIAL AND TRADE SECRET INFORMATION. THIS SHEET MAY NOT BE TRANSFERED FROM THE CUSTODY OF THE COMPETENT DIVISION OF R&D DEPARTMENT EXCEPT AS AUTHORIZED BY COMPAL ELECTRONICS, INC. NEITHER THIS SHEET NOR THE INFORMATION IT CONTAINS MAY BE USED BY OR DISCLOSED TO ANY THIRD PARTY WITHOUT PRIOR WRITTEN CONSENT OF COMPAL ELECTRONICS, INC.

Compal Electronics, Inc.

Title: CRT & TVout Connector

Size: Custom | Document Number: IGL50/51 LA-3771 | Rev: 0.1

Date: 星期四, 六月 08, 2006 | Sheet 36 of 48

NEW CARD FOR C38

Express Card Power Switch

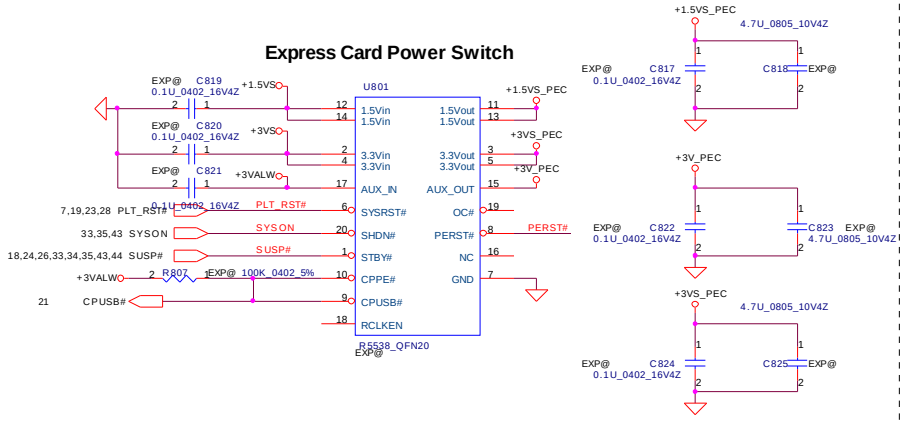

close to JP14

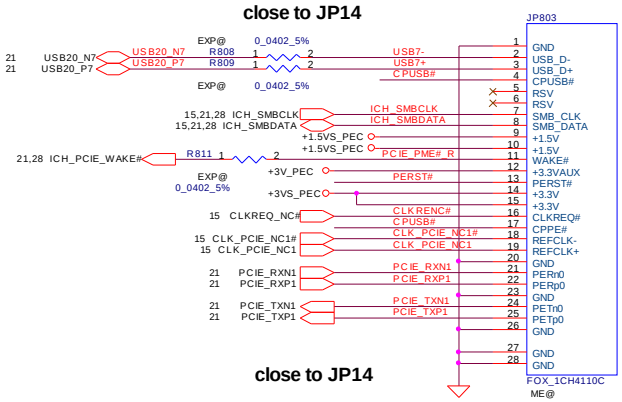

close to JP14

CMOS Camera Conn

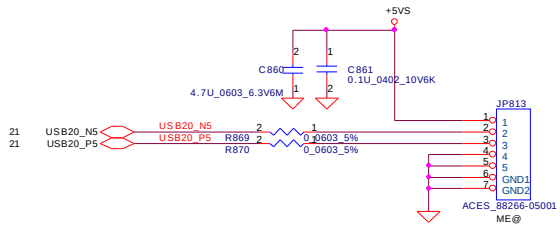

USB board

Pulled up on ICH7M side

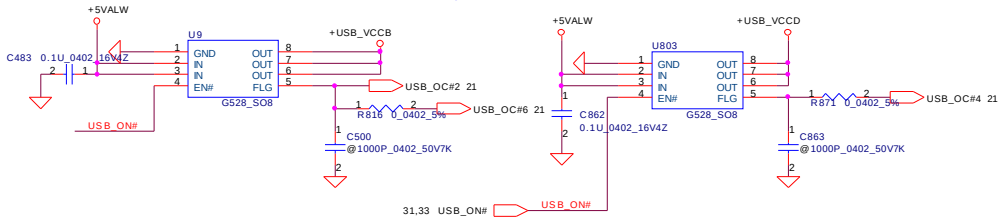

T/P Board

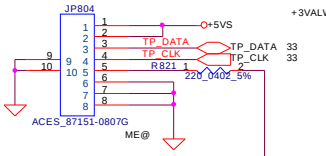

LID Switch

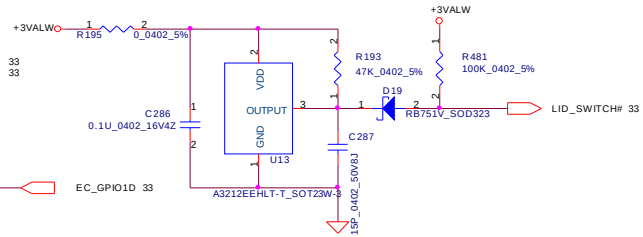

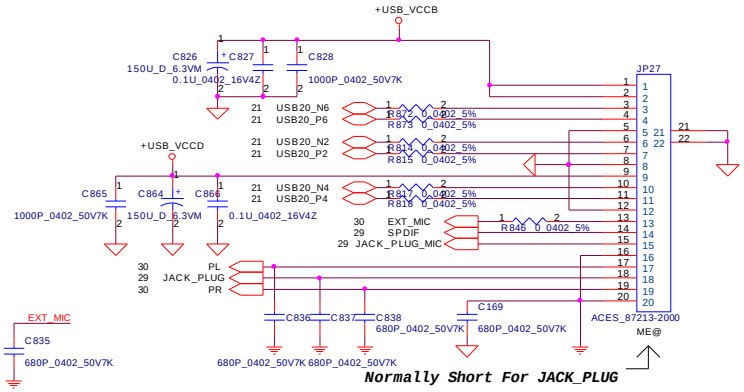

Normally Short For JACK_PLUG

C835 ~ C838 For EMI Solution

Security Classification	Compal Secret Data		
Issued Date	2005/03/10	Deciphered Date	2006/03/10

THIS SHEET OF ENGINEERING DRAWING IS THE PROPRIETARY PROPERTY OF COMPAL ELECTRONICS, INC. AND CONTAINS CONFIDENTIAL AND TRADE SECRET INFORMATION. THIS SHEET MAY NOT BE TRANSFERED FROM THE CUSTODY OF THE COMPETENT DIVISION OF R&D DEPARTMENT EXCEPT AS AUTHORIZED BY COMPAL ELECTRONICS, INC. NEITHER THIS SHEET NOR THE INFORMATION IT CONTAINS MAY BE USED BY OR DISCLOSED TO ANY THIRD PARTY WITHOUT PRIOR WRITTEN CONSENT OF COMPAL ELECTRONICS, INC.

Compal Electronics, Inc.

Title: **INDICATE LED**

Size: Custom | Document Number: IGL50/51 LA-3771 | Rev: 0.1

Date: 星期四, 六月 08, 2006 | Sheet 37 of 48

4 in 1 Card Reader

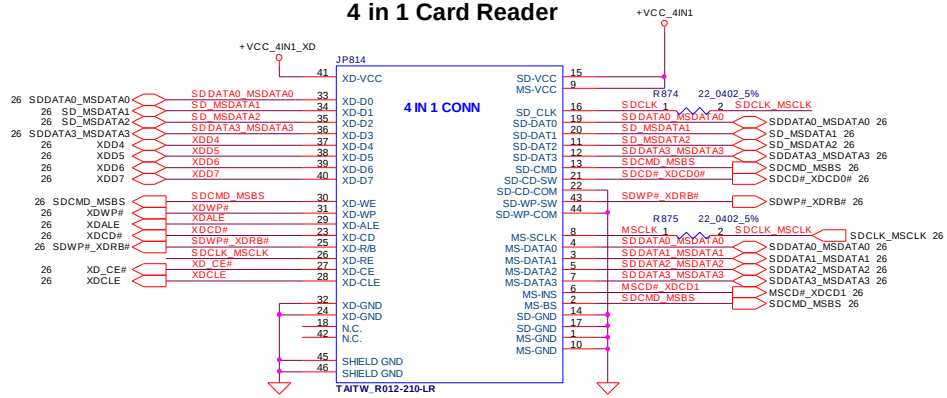

UMA LCD/PANEL Conn.

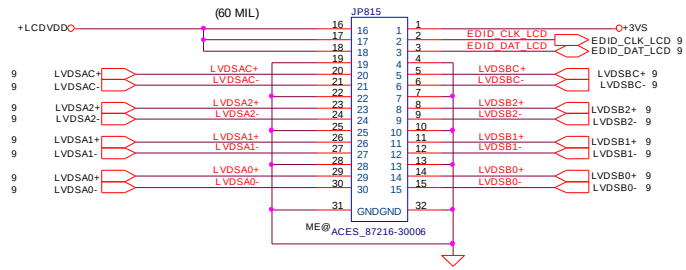

RJ11+RJ45 CONN

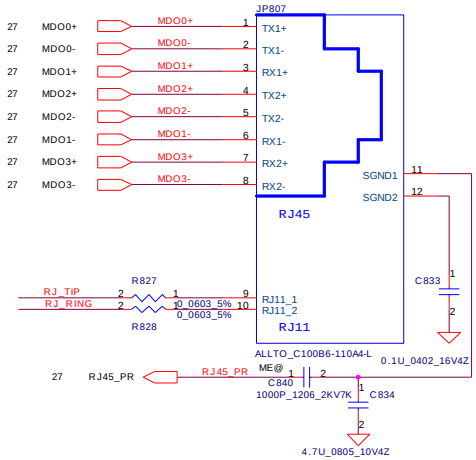

MDC CONN

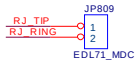

LED Indicator

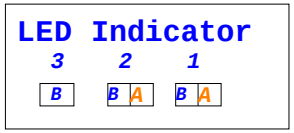

Wireless / Bluetooth LED

Blue / Amber — BATT_CHG_LED#

Blue / Amber — BATT_LOW_LED#

STATUS	
AC	BLUE
Chargin	Blinking Blue
Low BATT	Amber

Function

KEY Matrix	K016	K017
KSI0	DW-UP	DW-DOWN
KSI1	DW-ENTER	MUTE

Dial Wheel

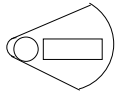

NOVO BTN

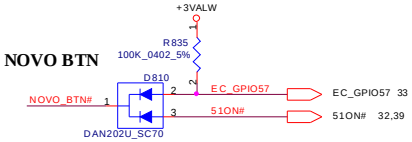

SUBWOOFER_ON/OFF_BTN#

RF_ON/OFF_BTN#

Left Switch BD

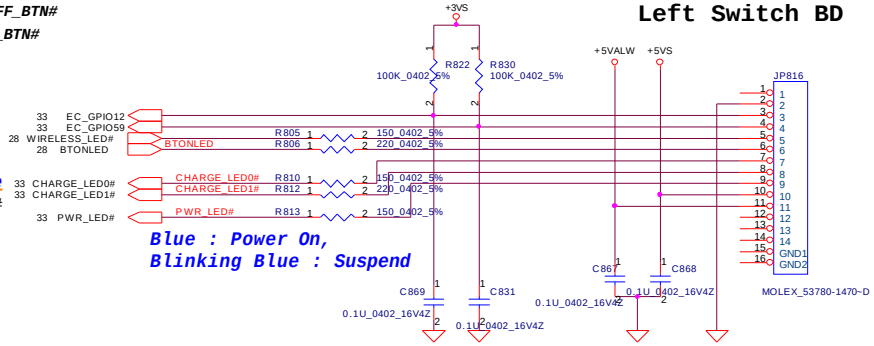

Blue : Power On,
Blinking Blue : Suspend

Right Switch BD

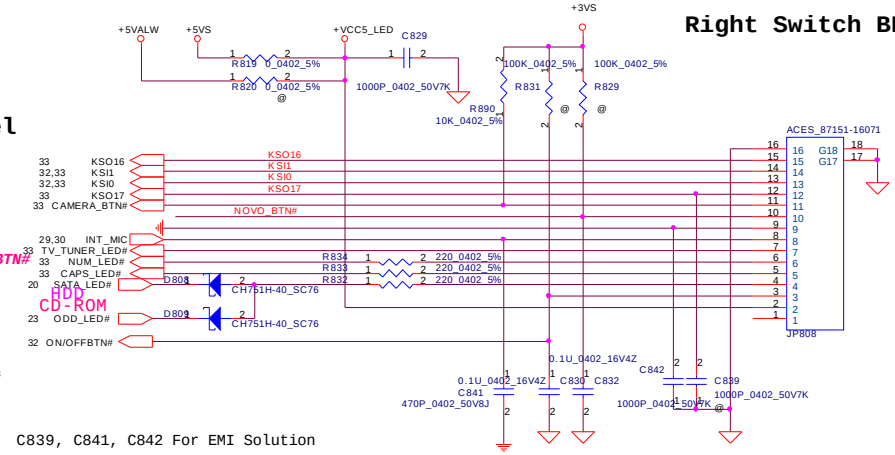

C839, C841, C842 For EMI Solution

Security Classification	Compal Secret Data		
Issued Date	2005/03/10	Deciphered Date	2006/03/10

THIS SHEET OF ENGINEERING DRAWING IS THE PROPRIETARY PROPERTY OF COMPAL ELECTRONICS, INC. AND CONTAINS CONFIDENTIAL AND TRADE SECRET INFORMATION. THIS SHEET MAY NOT BE TRANSFERED FROM THE CUSTODY OF THE COMPETENT DIVISION OF R&D DEPARTMENT EXCEPT AS AUTHORIZED BY COMPAL ELECTRONICS, INC. NEITHER THIS SHEET NOR THE INFORMATION IT CONTAINS MAY BE USED BY OR DISCLOSED TO ANY THIRD PARTY WITHOUT PRIOR WRITTEN CONSENT OF COMPAL ELECTRONICS, INC.

Compal Electronics, Inc.

Title: INDICATE LED

Size: Custom | Document Number: IGL50/51 LA-3771 | Rev: 0.1

Date: 星期四, 六月 08, 2006 | Sheet 38 of 48

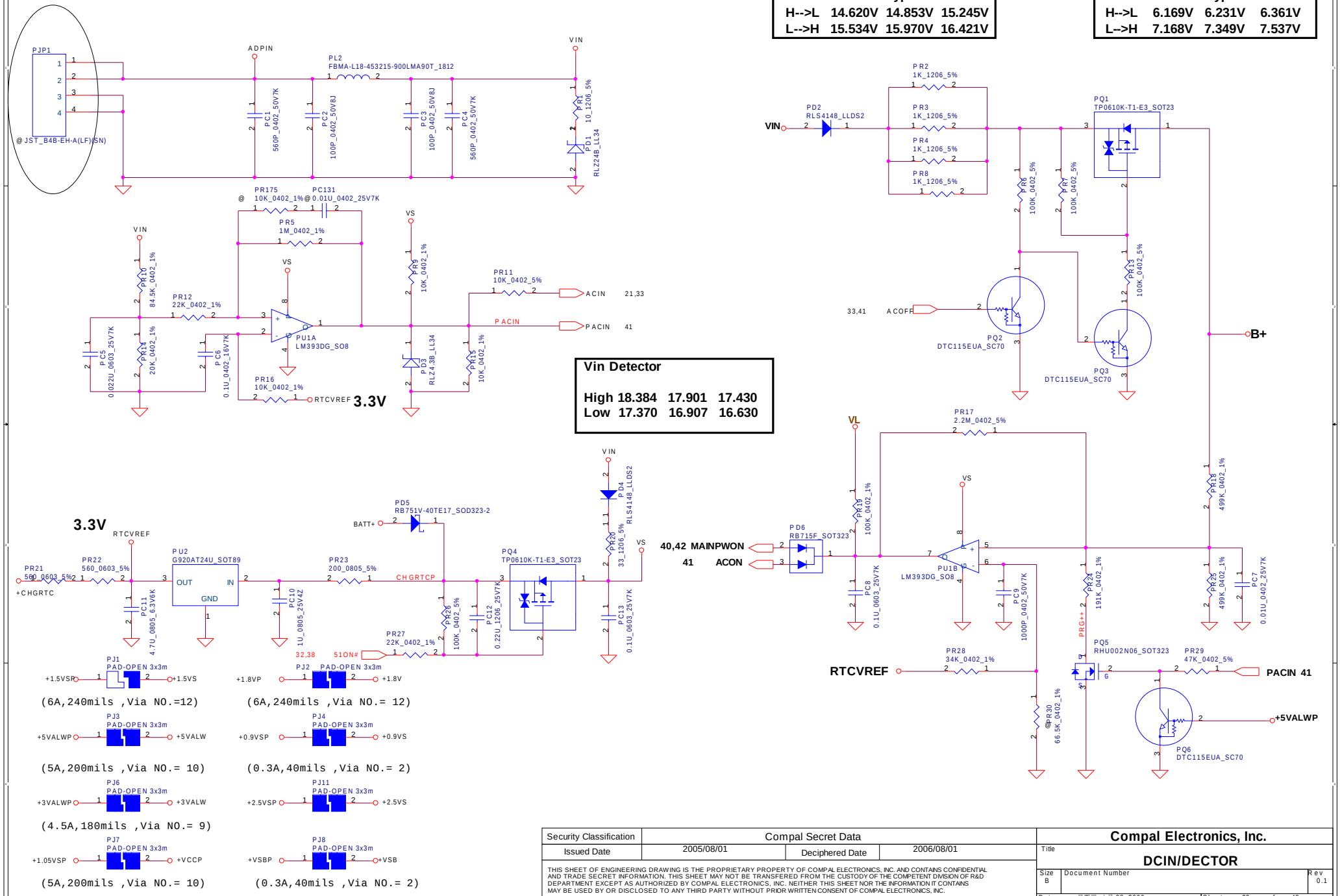

ACIN

Precharge detector	Min.	typ.	Max.
H-->L	14.620V	14.853V	15.245V
L-->H	15.534V	15.970V	16.421V

BATT ONLY

Precharge detector	Min.	typ.	Max.
H-->L	6.169V	6.231V	6.361V
L-->H	7.168V	7.349V	7.537V

Vin Detector

High	18.384	17.901	17.430
Low	17.370	16.907	16.630

Security Classification	Compal Secret Data		
Issued Date	2005/08/01	Deciphered Date	2006/08/01

THIS SHEET OF ENGINEERING DRAWING IS THE PROPRIETARY PROPERTY OF COMPAL ELECTRONICS, INC. AND CONTAINS CONFIDENTIAL AND TRADE SECRET INFORMATION. THIS SHEET MAY NOT BE TRANSFERED FROM THE CUSTODY OF THE COMPETENT DIVISION OF R&D DEPARTMENT EXCEPT AS AUTHORIZED BY COMPAL ELECTRONICS, INC. NEITHER THIS SHEET NOR THE INFORMATION IT CONTAINS MAY BE USED BY OR DISCLOSED TO ANY THIRD PARTY WITHOUT PRIOR WRITTEN CONSENT OF COMPAL ELECTRONICS, INC.

Compal Electronics, Inc.

Title: **DCIN/DECTOR**

Size: B | Document Number | Rev: 0.1

Date: 星期四, 六月 08, 2006 | Sheet 39 of 48

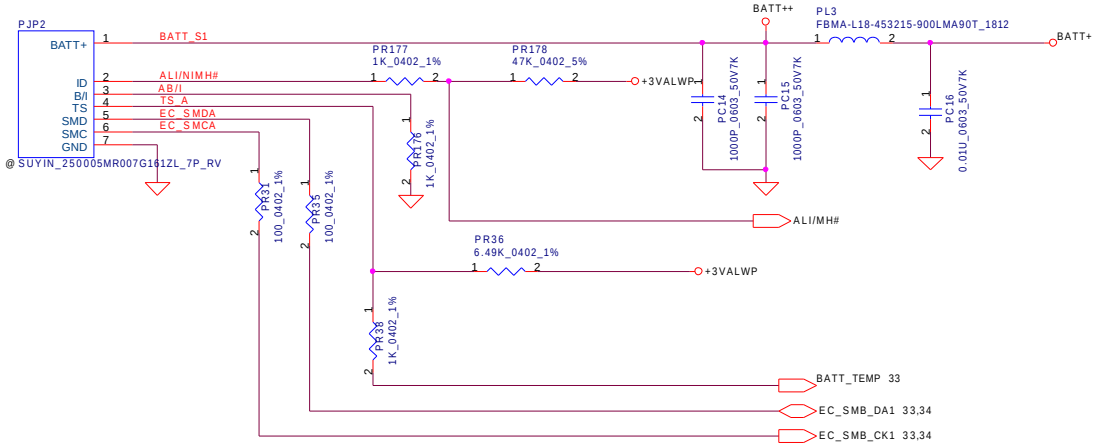

PH1 under CPU botten side :
CPU thermal protection at 85 degree C
Recovery at 70 degree C

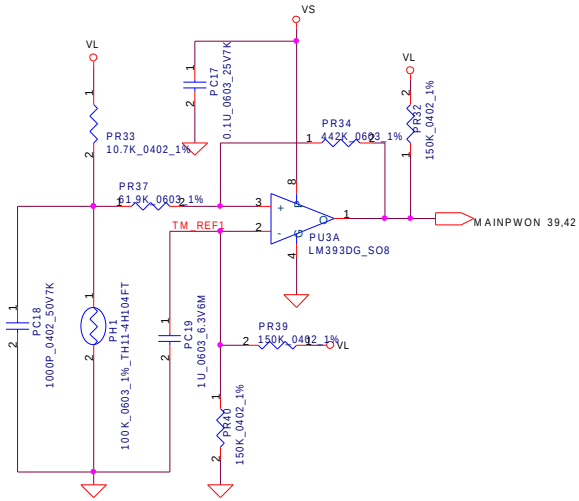

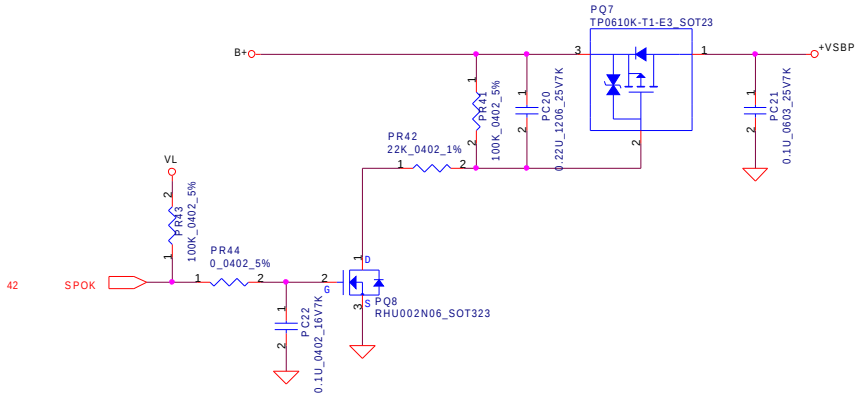

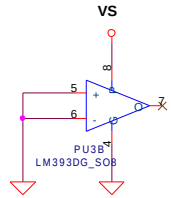

Security Classification	Compal Secret Data		
Issued Date	2005/08/01	Deciphered Date	2006/08/01

THIS SHEET OF ENGINEERING DRAWING IS THE PROPRIETARY PROPERTY OF COMPAL ELECTRONICS, INC. AND CONTAINS CONFIDENTIAL AND TRADE SECRET INFORMATION. THIS SHEET MAY NOT BE TRANSFERED FROM THE CUSTODY OF THE COMPETENT DIVISION OF R&D DEPARTMENT EXCEPT AS AUTHORIZED BY COMPAL ELECTRONICS, INC. NEITHER THIS SHEET NOR THE INFORMATION IT CONTAINS MAY BE USED BY OR DISCLOSED TO ANY THIRD PARTY WITHOUT PRIOR WRITTEN CONSENT OF COMPAL ELECTRONICS, INC.

Compal Electronics, Inc.

Title: **BATTERY CONN. / OTP**

Size: B | Document Number | Rev: 0.1

Date: 星期四, 六月 08, 2006 | Sheet 40 of 48

65W	PR45=0.02_2512_1%	PR54=30K_0402_1%	Iadp=0~3.125A
90W	PR45=0.02_2512_1%	PR54=20K_0402_1%	Iadp=0~4.166A

Fosc=14100/Rt=14100/47=300KHz

Charger

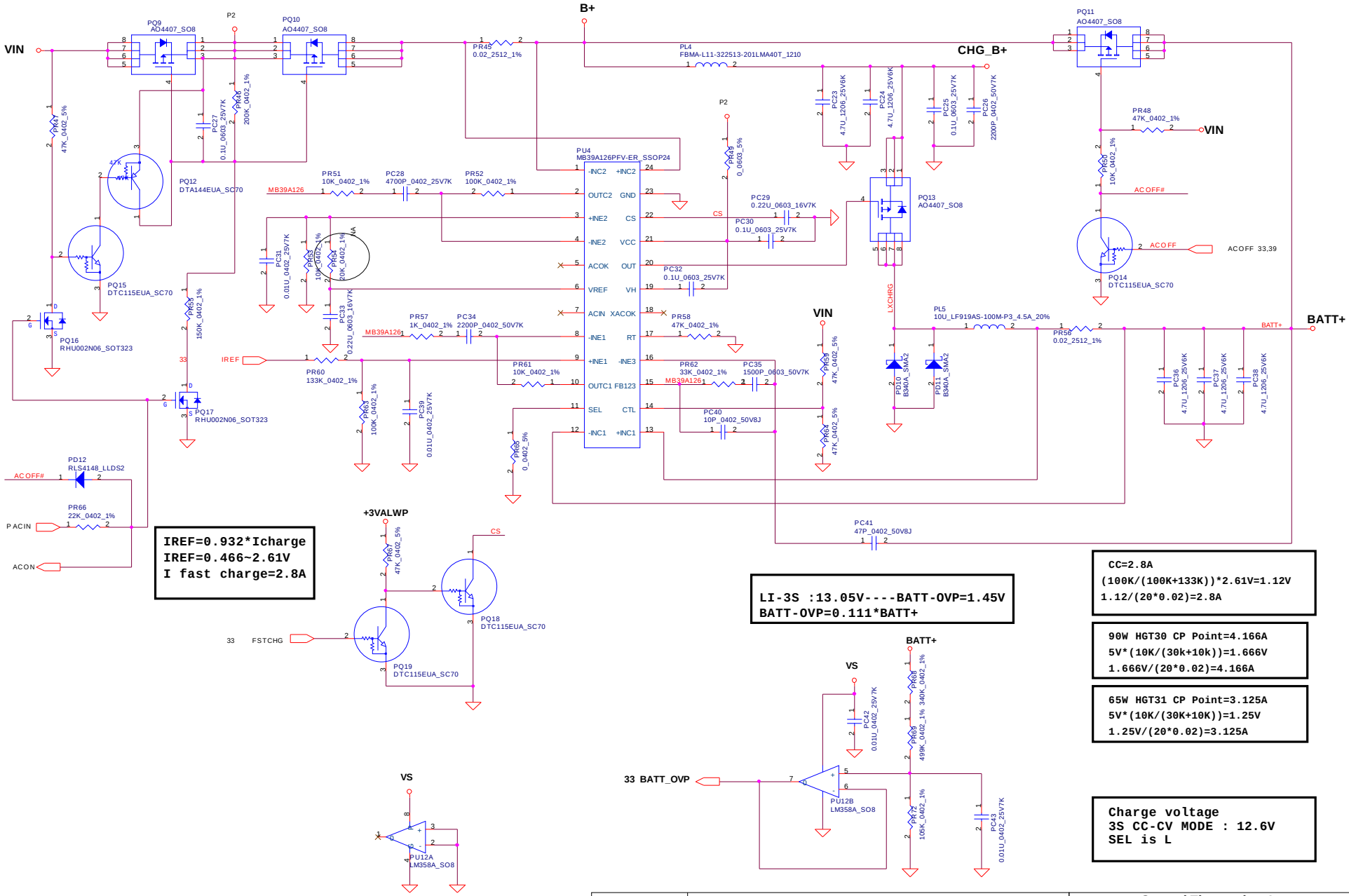

IREF=0.932*Icharge
IREF=0.466~2.61V
I fast charge=2.8A

LI-3S :13.05V----BATT-OVP=1.45V
BATT-OVP=0.111*BATT+

CC=2.8A
(100K/(100K+133K))*2.61V=1.12V
1.12/(20*0.02)=2.8A

90W HGT30 CP Point=4.166A
5V*(10K/(30k+10k))=1.666V
1.666V/(20*0.02)=4.166A

65W HGT31 CP Point=3.125A
5V*(10K/(30K+10K))=1.25V
1.25V/(20*0.02)=3.125A

Charge voltage
3S CC-CV MODE : 12.6V
SEL is L

Security Classification	Compal Secret Data		
Issued Date	2005/08/01	Deciphered Date	2006/08/01

THIS SHEET OF ENGINEERING DRAWING IS THE PROPRIETARY PROPERTY OF COMPAL ELECTRONICS, INC. AND CONTAINS CONFIDENTIAL AND TRADE SECRET INFORMATION. THIS SHEET MAY NOT BE TRANSFERED FROM THE CUSTODY OF THE COMPETENT DIVISION OF R&D DEPARTMENT EXCEPT AS AUTHORIZED BY COMPAL ELECTRONICS, INC. NEITHER THIS SHEET NOR THE INFORMATION IT CONTAINS MAY BE USED BY OR DISCLOSED TO ANY THIRD PARTY WITHOUT PRIOR WRITTEN CONSENT OF COMPAL ELECTRONICS, INC.

Compal Electronics, Inc.

Title: PWR-Charger

Size: B | Document Number | Rev: 0.1

Date: 星期四, 六月 08, 2006 | Sheet 41 of 48

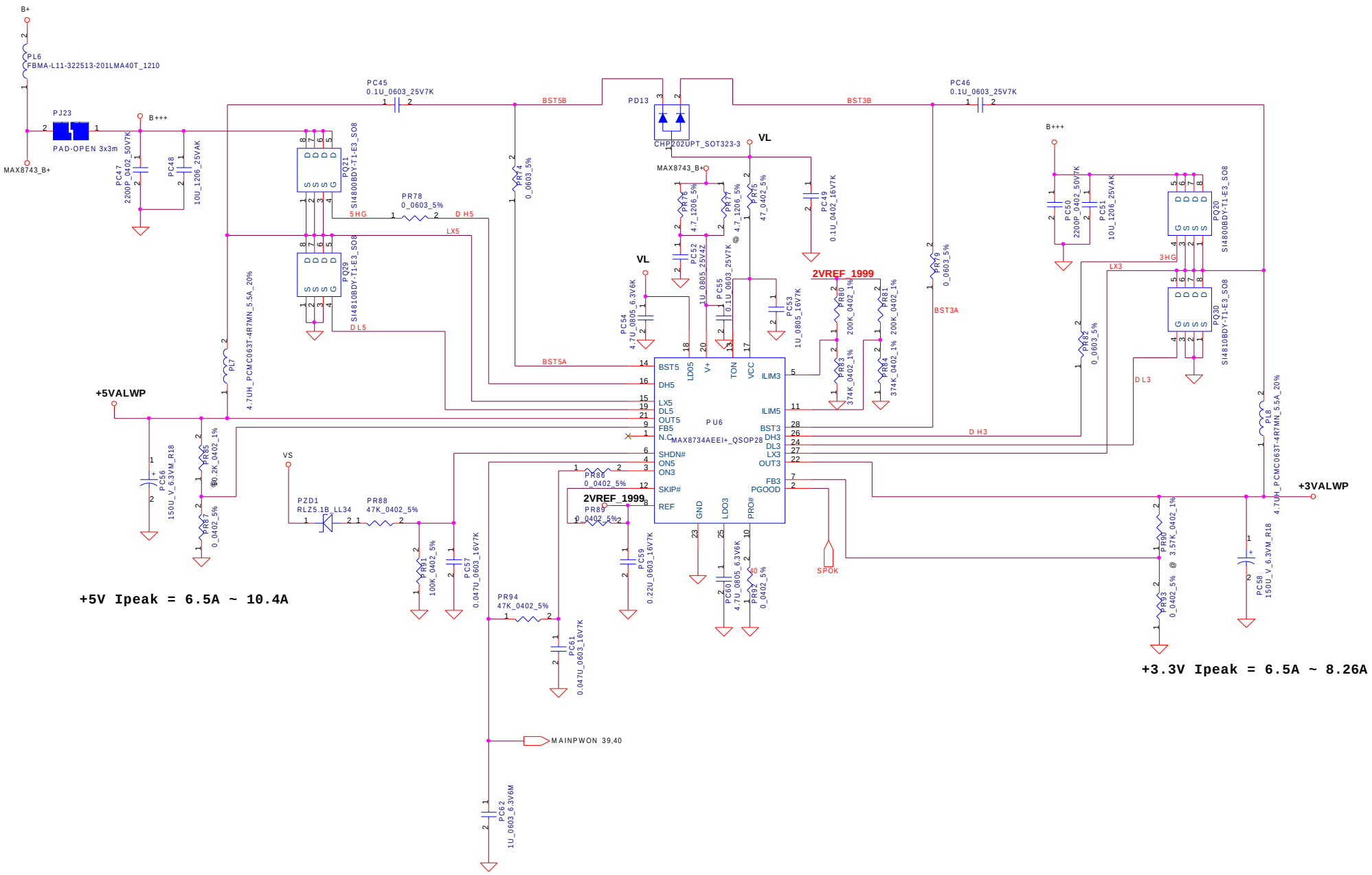

Security Classification	Compal Secret Data		
Issued Date	2005/08/01	Deciphered Date	2006/08/01

THIS SHEET OF ENGINEERING DRAWING IS THE PROPRIETARY PROPERTY OF COMPAL ELECTRONICS, INC. AND CONTAINS CONFIDENTIAL AND TRADE SECRET INFORMATION. THIS SHEET MAY NOT BE TRANSFERED FROM THE CUSTODY OF THE COMPETENT DIVISION OF R&D DEPARTMENT EXCEPT AS AUTHORIZED BY COMPAL ELECTRONICS, INC. NEITHER THIS SHEET NOR THE INFORMATION IT CONTAINS MAY BE USED BY OR DISCLOSED TO ANY THIRD PARTY WITHOUT PRIOR WRITTEN CONSENT OF COMPAL ELECTRONICS, INC.

Compal Electronics, Inc.

Title: **+5VALWP/+3VALWP**

Size: Custom | Document Number | Rev: 0.1

Date: 星期四, 六月 08, 2006 | Sheet 42 of 48

+1.8VP Ilimit = 7.87A~12.5A

+1.05VSP Ilimit=6.33A~10.03A

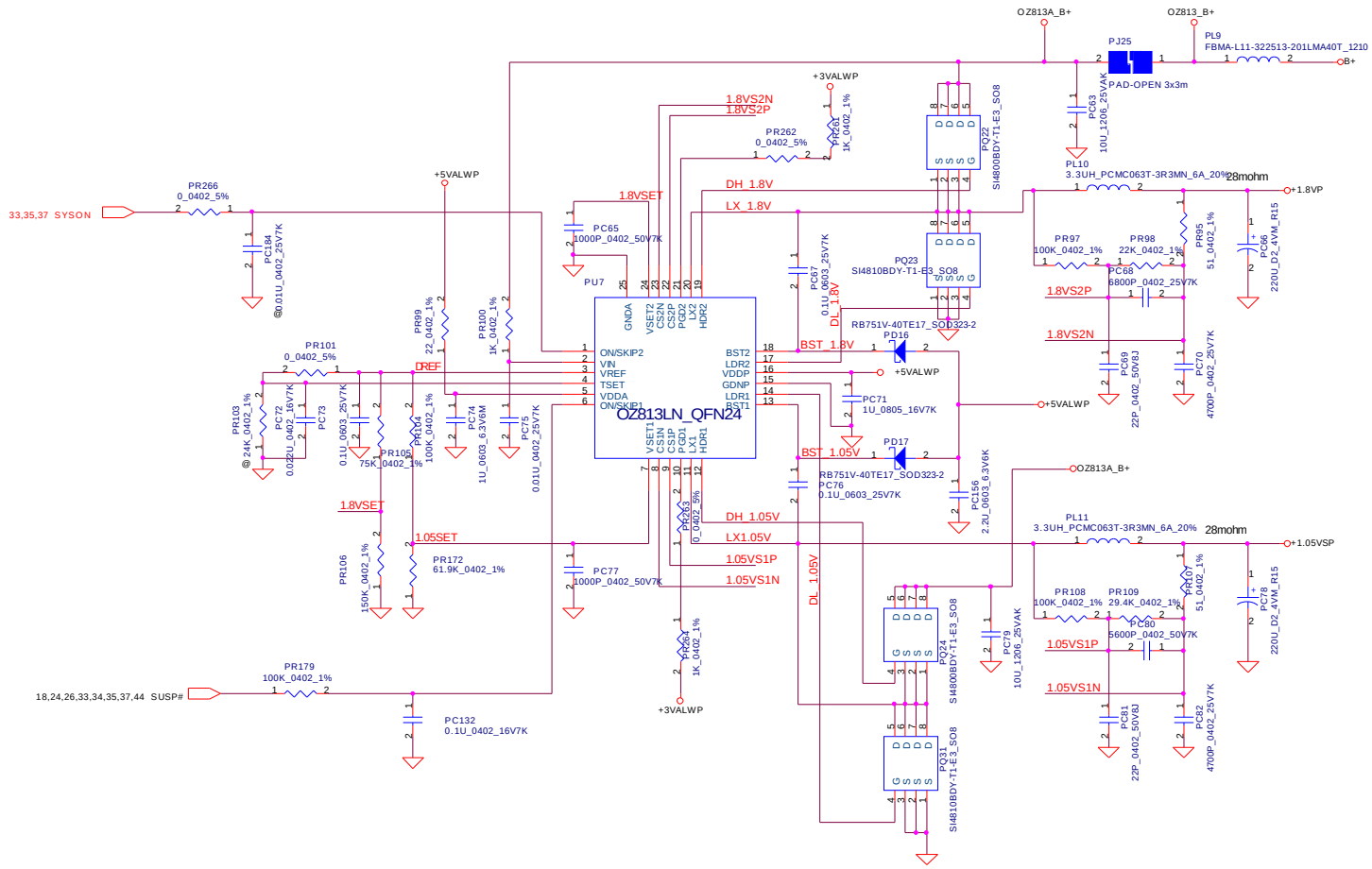

Security Classification	Compal Secret Data		
Issued Date	2005/08/01	Deciphered Date	2006/08/01

THIS SHEET OF ENGINEERING DRAWING IS THE PROPRIETARY PROPERTY OF COMPAL ELECTRONICS, INC. AND CONTAINS CONFIDENTIAL AND TRADE SECRET INFORMATION. THIS SHEET MAY NOT BE TRANSFERED FROM THE CUSTODY OF THE COMPETENT DIVISION OF R&D DEPARTMENT EXCEPT AS AUTHORIZED BY COMPAL ELECTRONICS, INC. NEITHER THIS SHEET NOR THE INFORMATION IT CONTAINS MAY BE USED BY OR DISCLOSED TO ANY THIRD PARTY WITHOUT PRIOR WRITTEN CONSENT OF COMPAL ELECTRONICS, INC.

Compal Electronics, Inc.

Title: **1.05VSP/1.8VP**

Size: Custom | Document Number: | Rev: 0.1

Date: 星期四, 六月 08, 2006 | Sheet 43 of 48

+1.5VSP Ilimit = 9.38A~12.5A

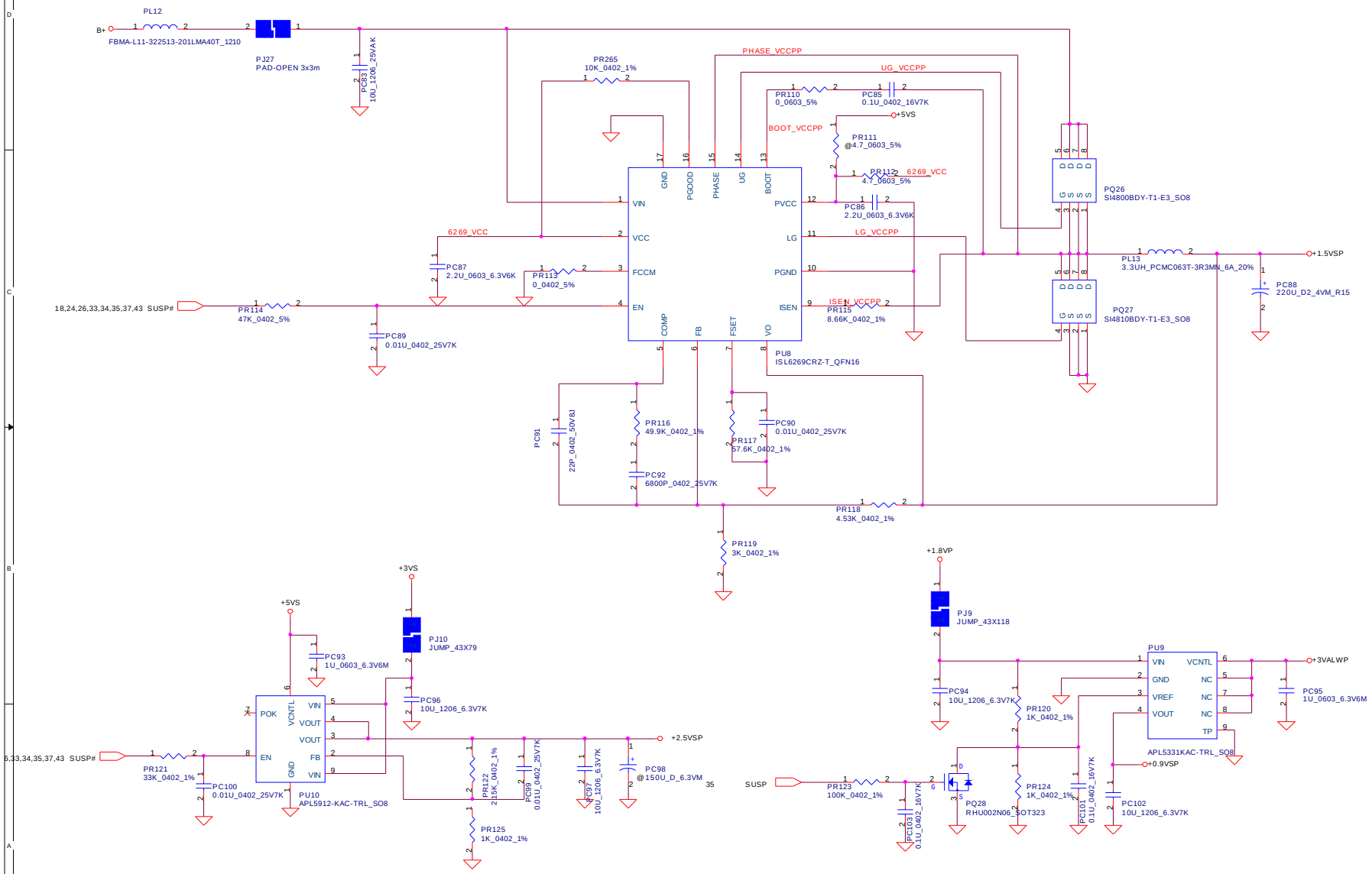

Security Classification	Compal Secret Data		
Issued Date	2005/08/01	Deciphered Date	2006/08/01

THIS SHEET OF ENGINEERING DRAWING IS THE PROPRIETARY PROPERTY OF COMPAL ELECTRONICS, INC. AND CONTAINS CONFIDENTIAL AND TRADE SECRET INFORMATION. THIS SHEET MAY NOT BE TRANSFERED FROM THE CUSTODY OF THE COMPETENT DIVISION OF R&D DEPARTMENT EXCEPT AS AUTHORIZED BY COMPAL ELECTRONICS, INC. NEITHER THIS SHEET NOR THE INFORMATION IT CONTAINS MAY BE USED BY OR DISCLOSED TO ANY THIRD PARTY WITHOUT PRIOR WRITTEN CONSENT OF COMPAL ELECTRONICS, INC.

Compal Electronics, Inc.

Title: **+VCCPP/+2.5VSP/0.9VSP**

Size: Custom | Document Number | Rev: 0.1

Date: 星期四, 六月 08, 2006 | Sheet 44 of 48

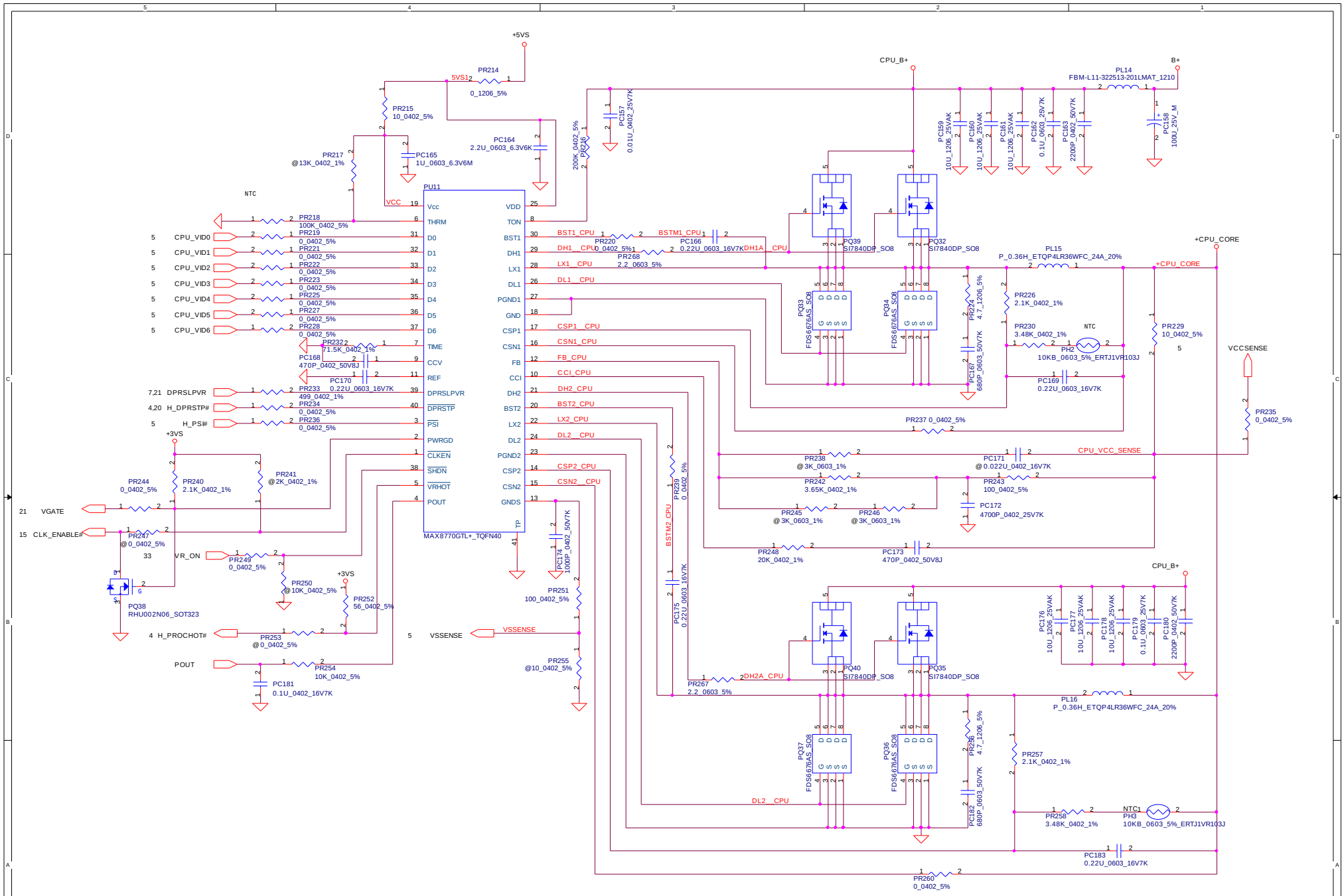

Security Classification	Compal Secret Data		
Issued Date	2005/06/20	Deciphered Date	2006/06/20

THIS SHEET OF ENGINEERING DRAWING IS THE PROPRIETARY PROPERTY OF COMPAL ELECTRONICS, INC. AND CONTAINS CONFIDENTIAL AND TRADE SECRET INFORMATION. THIS SHEET MAY NOT BE TRANSFERED FROM THE CUSTODY OF THE COMPETENT DIVISION OF R&D DEPARTMENT EXCEPT AS AUTHORIZED BY COMPAL ELECTRONICS, INC. NEITHER THIS SHEET NOR THE INFORMATION IT CONTAINS D TO ANY THIRD PARTY WITHOUT PRIOR WRITTEN CONSENT OF COMPAL ELECTRONICS, INC.

Compal Electronics, Inc.

Title: **+CPU_CORE**

Size: Custom | Document Number | Rev: 0.1

Date: 星期四, 六 ?08, 2006 | Sheet 45 of 48

Version change list (P.I.R. List)

Page 1 of 1
for PWR

Item	Fixed Issue	Reason for change	Rev.	PG#	Modify List	VER	Phase
1							
2							
3							
4							
5							
6							
7							
8							
9							
10							
11							
8							
9							

Compal Electronics, Inc.

Title: **PIR (PWR)**

Size | Document Number | Rev 0.2

Date: 星期四, 六月 08, 2006 | Sheet 46 of 48

Version change list (P.I.R. List)

Item	Fixed Issue	Rev.	PG#	Modify List	B.Ver#	Phase
1					0.2	DVT
2					0.2	DVT
3					0.2	DVT
4					0.2	DVT
5					0.2	DVT
6					0.2	DVT
7					0.2	DVT
8					0.2	DVT
9					0.2	DVT
10					0.2	DVT
11					0.2	DVT

THIS SHEET OF ENGINEERING DRAWING IS THE PROPRIETARY PROPERTY OF COMPAL ELECTRONICS, INC. AND CONTAINS CONFIDENTIAL AND TRADE SECRET INFORMATION. THIS SHEET MAY NOT BE TRANSFERED FROM THE CUSTODY OF THE COMPETENT DIVISION OF R&D DEPARTMENT EXCEPT AS AUTHORIZED BY COMPAL ELECTRONICS, INC. NEITHER THIS SHEET NOR THE INFORMATION IT CONTAINS MAY BE USED BY OR DISCLOSED TO ANY THIRD PARTY WITHOUT PRIOR WRITTEN CONSENT OF COMPAL ELECTRONICS, INC.

Version change list (P.I.R. List)

Item	Fixed Issue	Rev.	PG#	Modify List	B.Ver#	Phase
12					0.3	PVT
13					0.3	PVT
14					0.3	PVT
15					0.3	PVT
16					0.3	PVT

THIS SHEET OF ENGINEERING DRAWING IS THE PROPRIETARY PROPERTY OF COMPAL ELECTRONICS, INC. AND CONTAINS CONFIDENTIAL AND TRADE SECRET INFORMATION. THIS SHEET MAY NOT BE TRANSFERED FROM THE CUSTODY OF THE COMPETENT DIVISION OF R&D DEPARTMENT EXCEPT AS AUTHORIZED BY COMPAL ELECTRONICS, INC. NEITHER THIS SHEET NOR THE INFORMATION IT CONTAINS MAY BE USED BY OR DISCLOSED TO ANY THIRD PARTY WITHOUT PRIOR WRITTEN CONSENT OF COMPAL ELECTRONICS, INC.