CT1 BLOCK DIAGRAM

PENTIUM-M / Montara-GM / ICH4-M

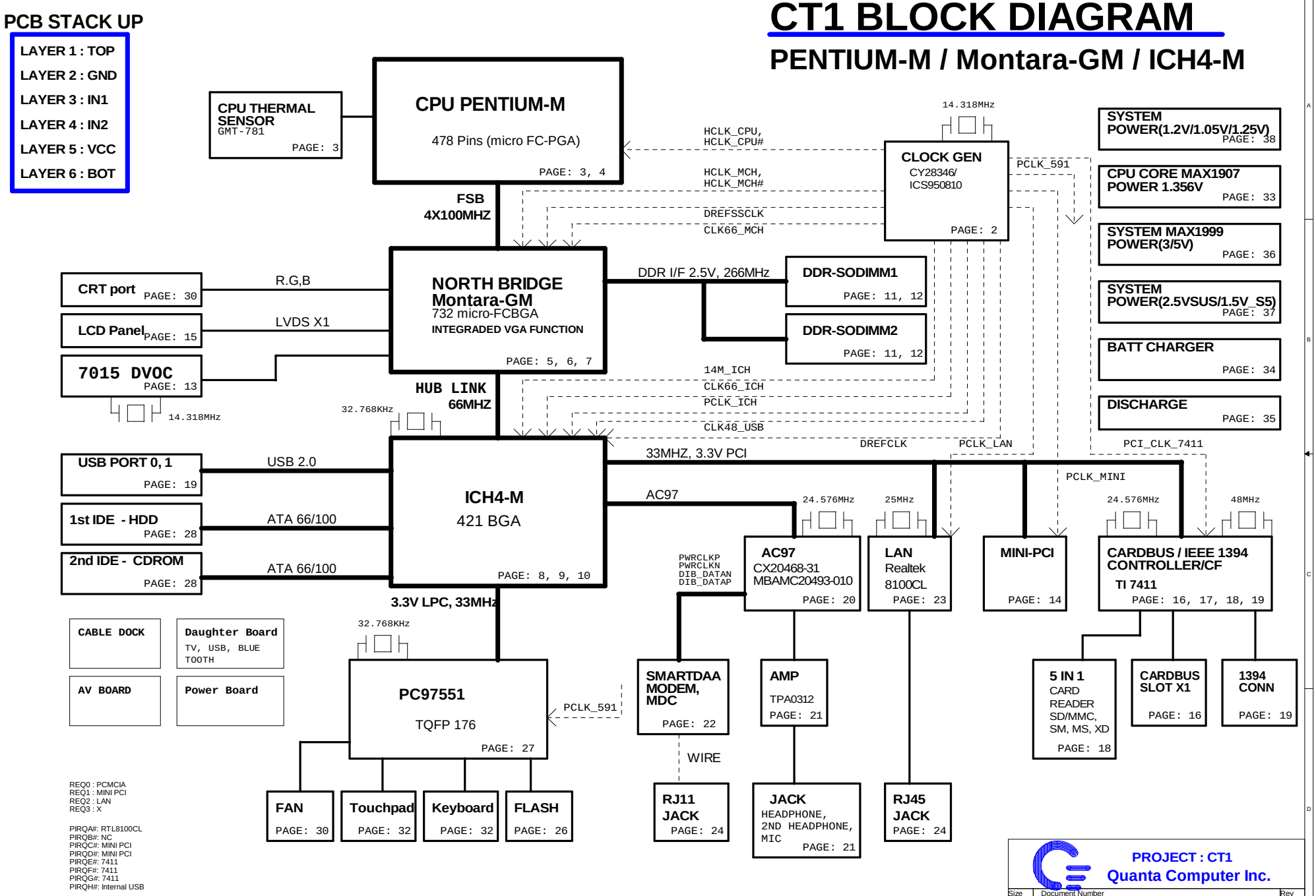

PDF created with pdfFactory trial version www.pdffactory.com

CLK GEN

S2	S1	S0	CPU	3V66[0..4]	3V66_5/66IN
1	0	0	66	66IN	66 Input
1	0	1	100	66IN	66 Input
1	1	0	200	66IN	66 Input
1	1	1	133	66IN	66 Input
0	0	0	66	66	66 Input
0	0	1	100	66	66 Input
0	1	0	200	66	66 Input
0	1	1	133	66	66 Input

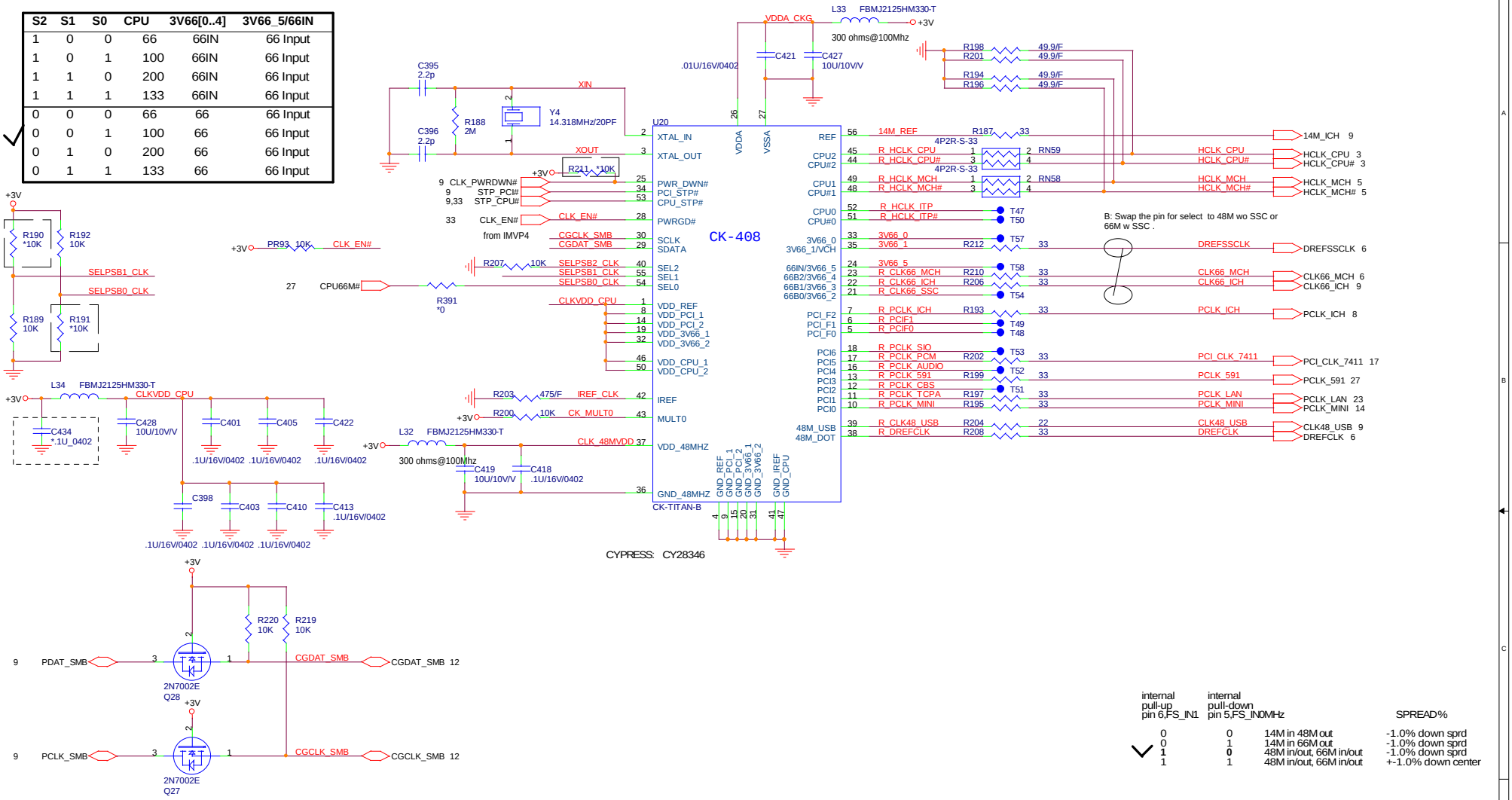

internal pull-up pin 6,FS_IN1	internal pull-down pin 5,FS_IN0MHz		SPREAD%
0	0	14M in 48M out	-1.0% down sprd
0	1	14M in 66M out	-1.0% down sprd
1	0	48M in/out, 66M in/out	-1.0% down sprd
1	1	48M in/out, 66M in/out	+-1.0% down center

PROJECT : CT1
Quanta Computer Inc.

Size	Document Number	Rev
Custom	CLOCK GENERATOR	1A

Date: Wednesday, April 14, 2004 Sheet 2 of 38

PDF created with pdfFactory trial version www.pdffactory.com

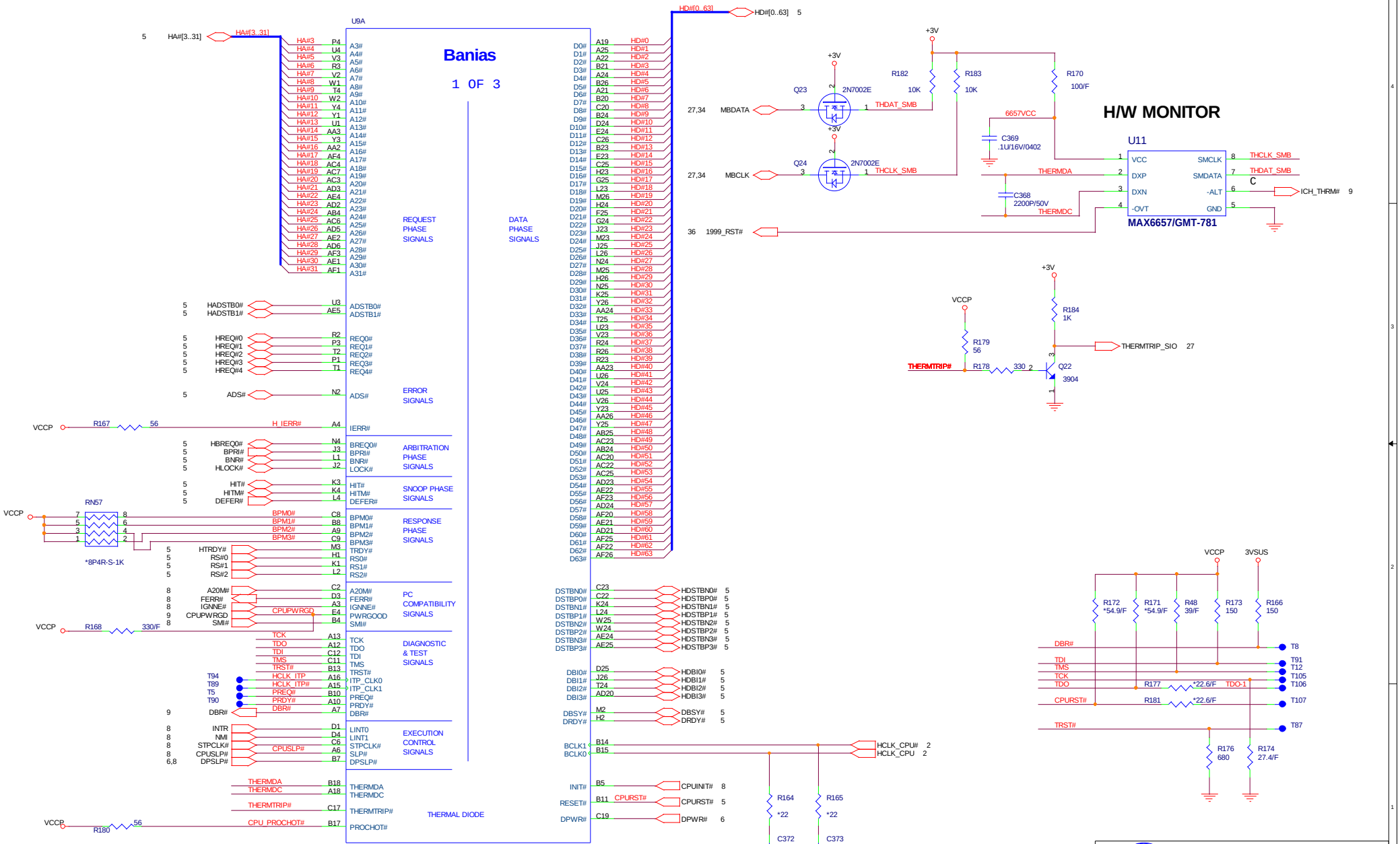

BANIAS CPU 1 of 2 (HOST BUS)

PDF created with pdfFactory trial version www.pdffactory.com

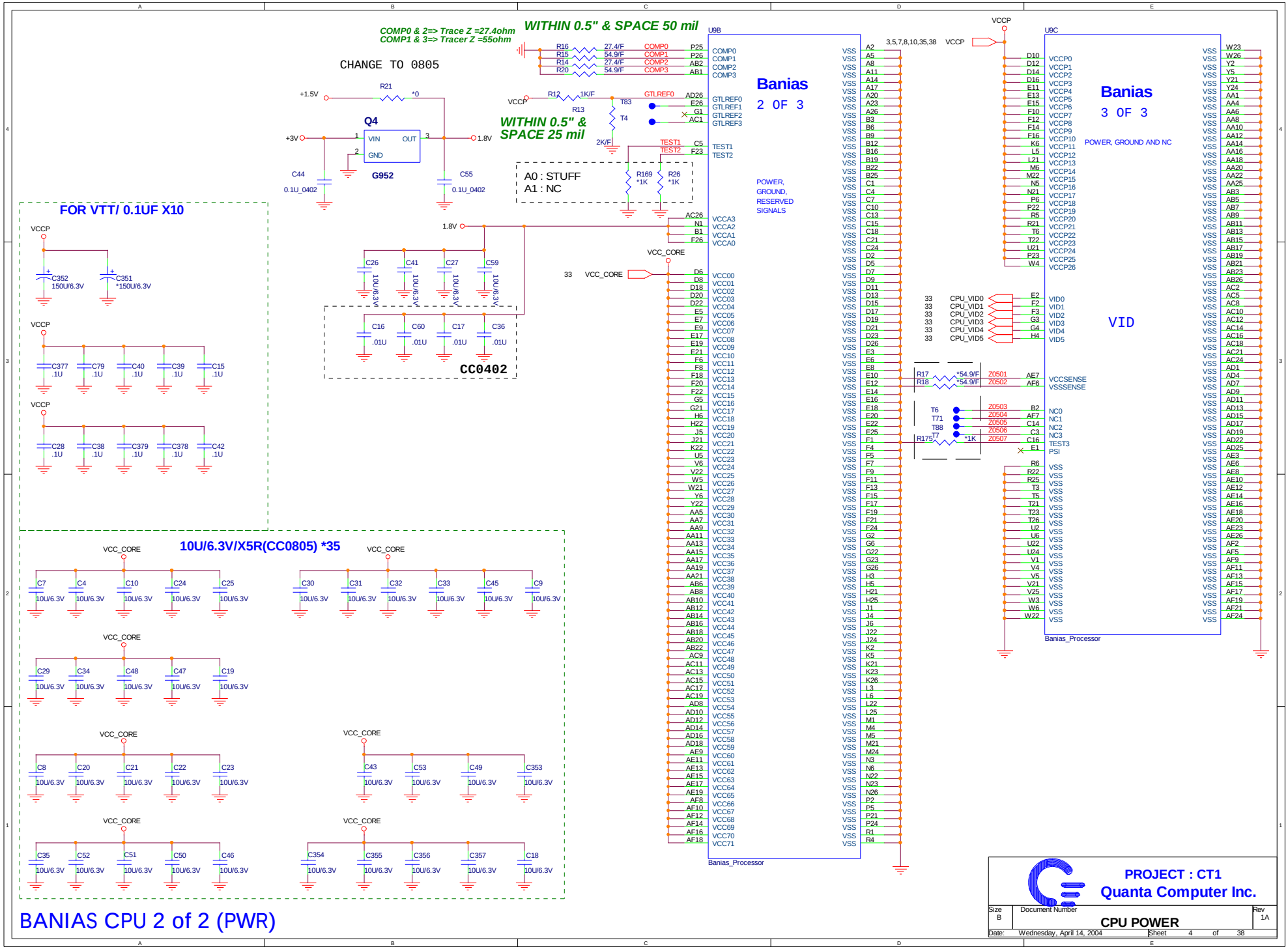

PDF created with pdfFactory trial version www.pdffactory.com

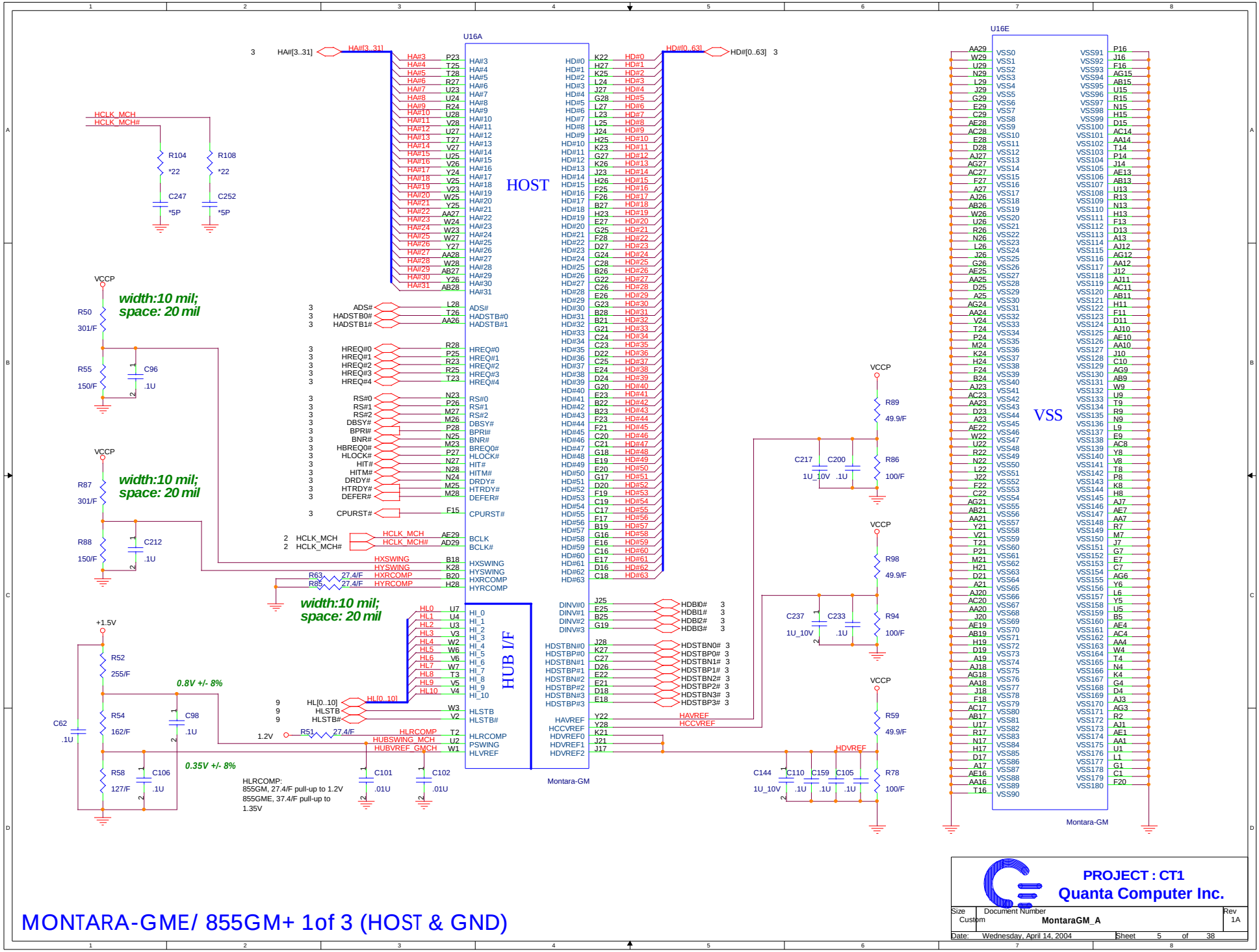

PROJECT : CT1

Quanta Computer Inc.

Size	Document Number	Rev
Custom	MontaraGM_A	1A

Date: Wednesday, April 14, 2004 Sheet 5 of 38

MONTARA-GME/ 855GM+ 1of 3 (HOST & GND)

PDF created with pdfFactory trial version www.pdffactory.com

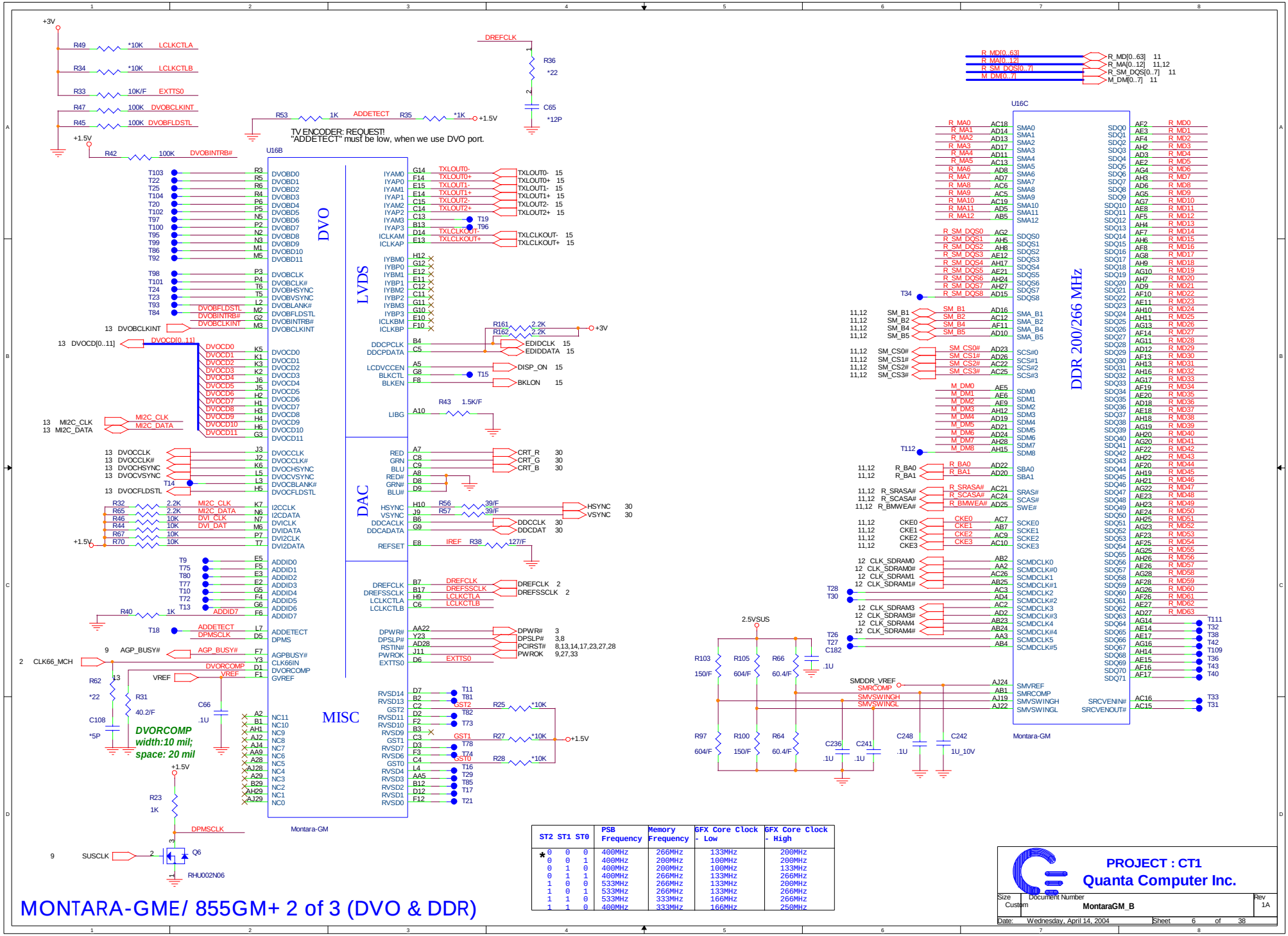

ST2	ST1	ST0	PSB Frequency	Memory Frequency	GFX Core Clock - Low	GFX Core Clock - High
* 0	0	0	400MHz	266MHz	133MHz	200MHz
0	0	1	400MHz	200MHz	200MHz	200MHz
0	1	0	400MHz	200MHz	100MHz	133MHz
0	1	1	400MHz	266MHz	133MHz	266MHz
1	0	0	533MHz	266MHz	133MHz	200MHz
1	0	1	533MHz	266MHz	133MHz	266MHz
1	1	0	533MHz	333MHz	166MHz	266MHz
1	1	0	400MHz	333MHz	166MHz	250MHz

PDF created with pdfFactory trial version www.pdffactory.com

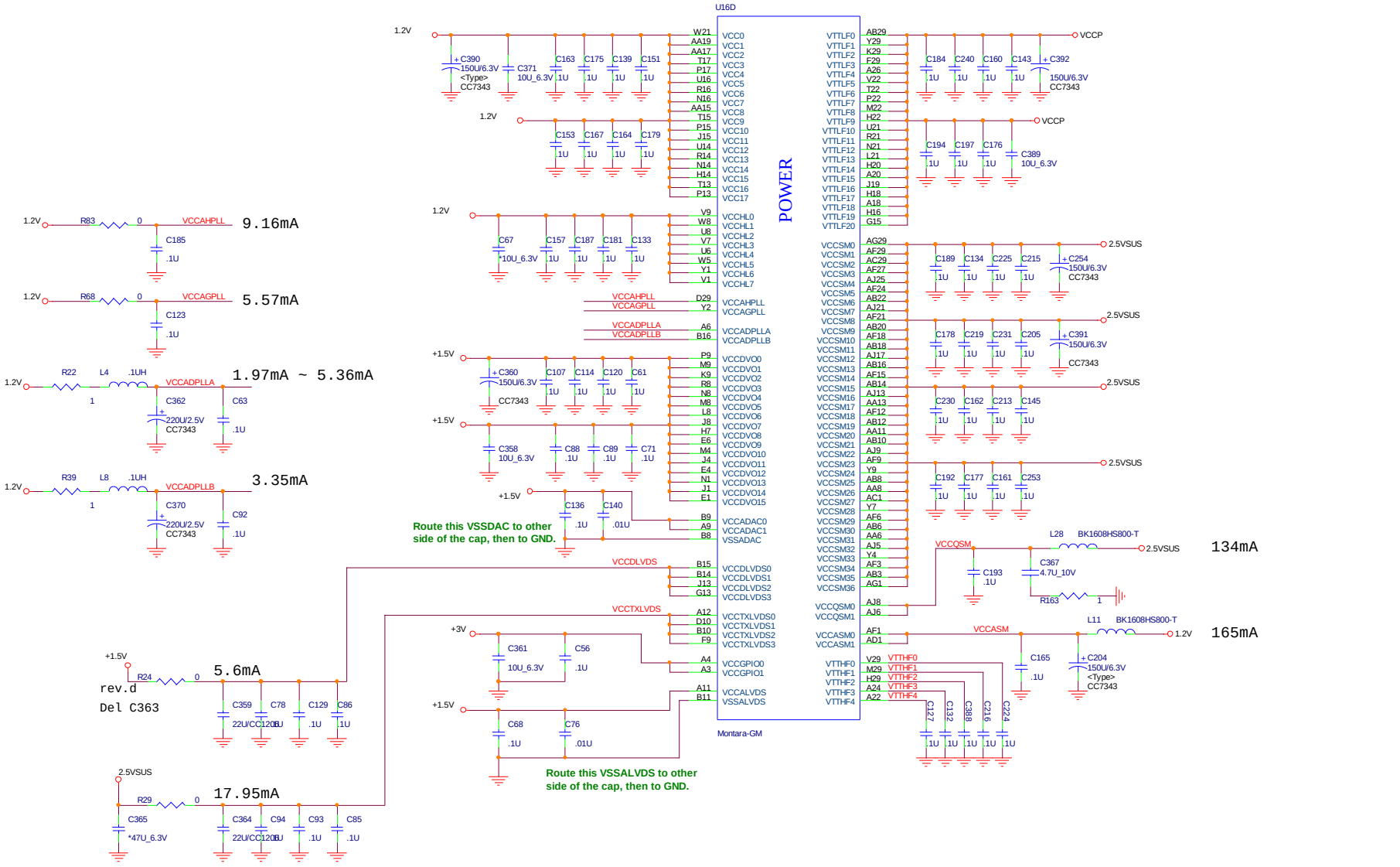

change +2.5v to 2.5vsus

MONTARA-GME/ 855GM+ 3 of 3 (POWER & CAP.)

PROJECT : CT1
Quanta Computer Inc.

Size	Document Number	Rev
Custom	MontaraGM_C	1A

Date: Wednesday, April 14, 2004 Sheet 7 of 38

PDF created with pdfFactory trial version www.pdffactory.com

ICH4-M 1/3 (CPU, PCI, IDE)

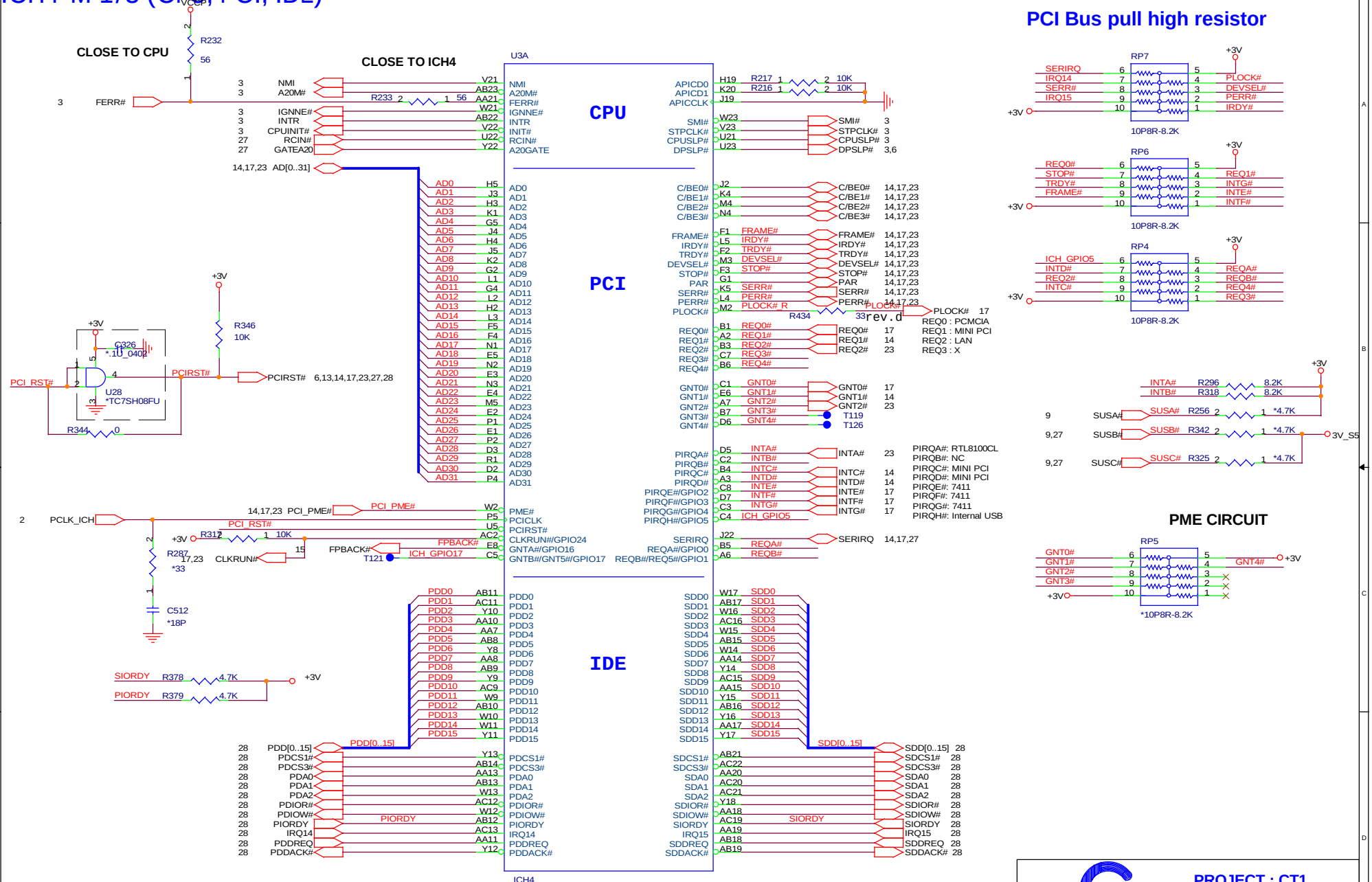

PDF created with pdfFactory trial version www.pdffactory.com

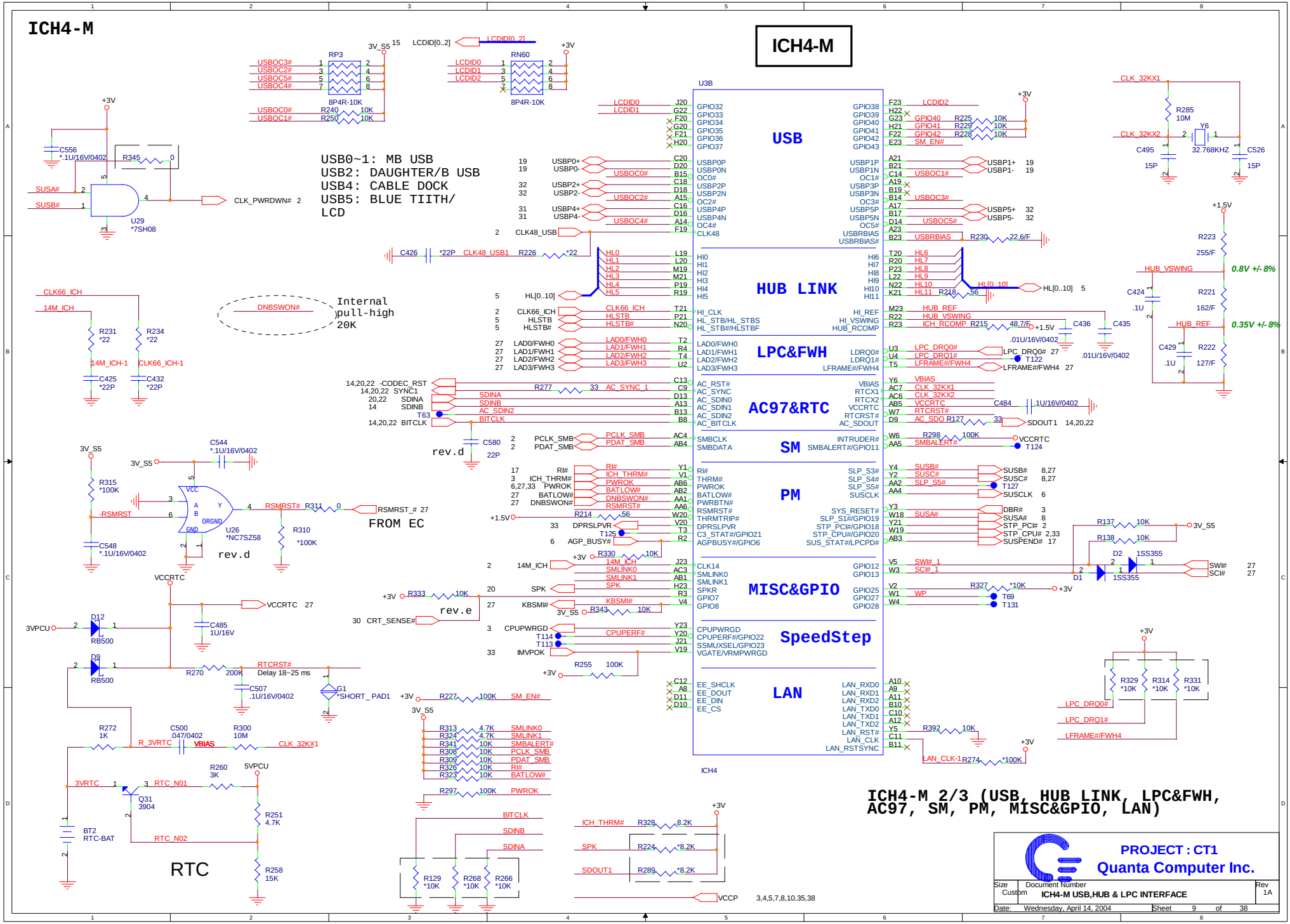

PDF created with pdfFactory trial version www.pdffactory.com

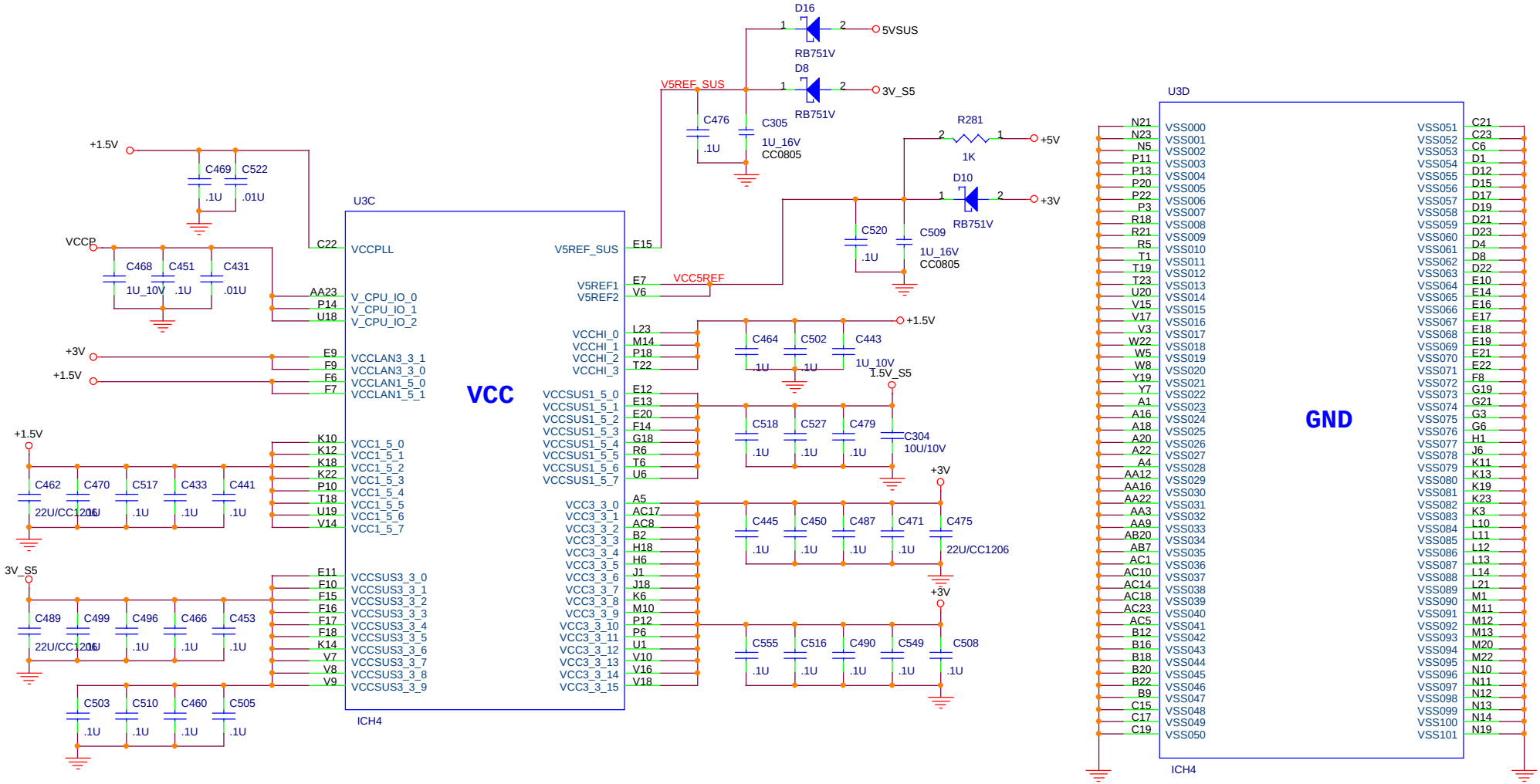

ICH4-M 3/3 (PWR, GND)

PROJECT : CT1

Quanta Computer Inc.

Size	Document Number	Rev
Custom	ICH4-M (POWER&GND)	1A

Date: Wednesday, April 14, 2004 Sheet 10 of 38

PDF created with pdfFactory trial version www.pdffactory.com

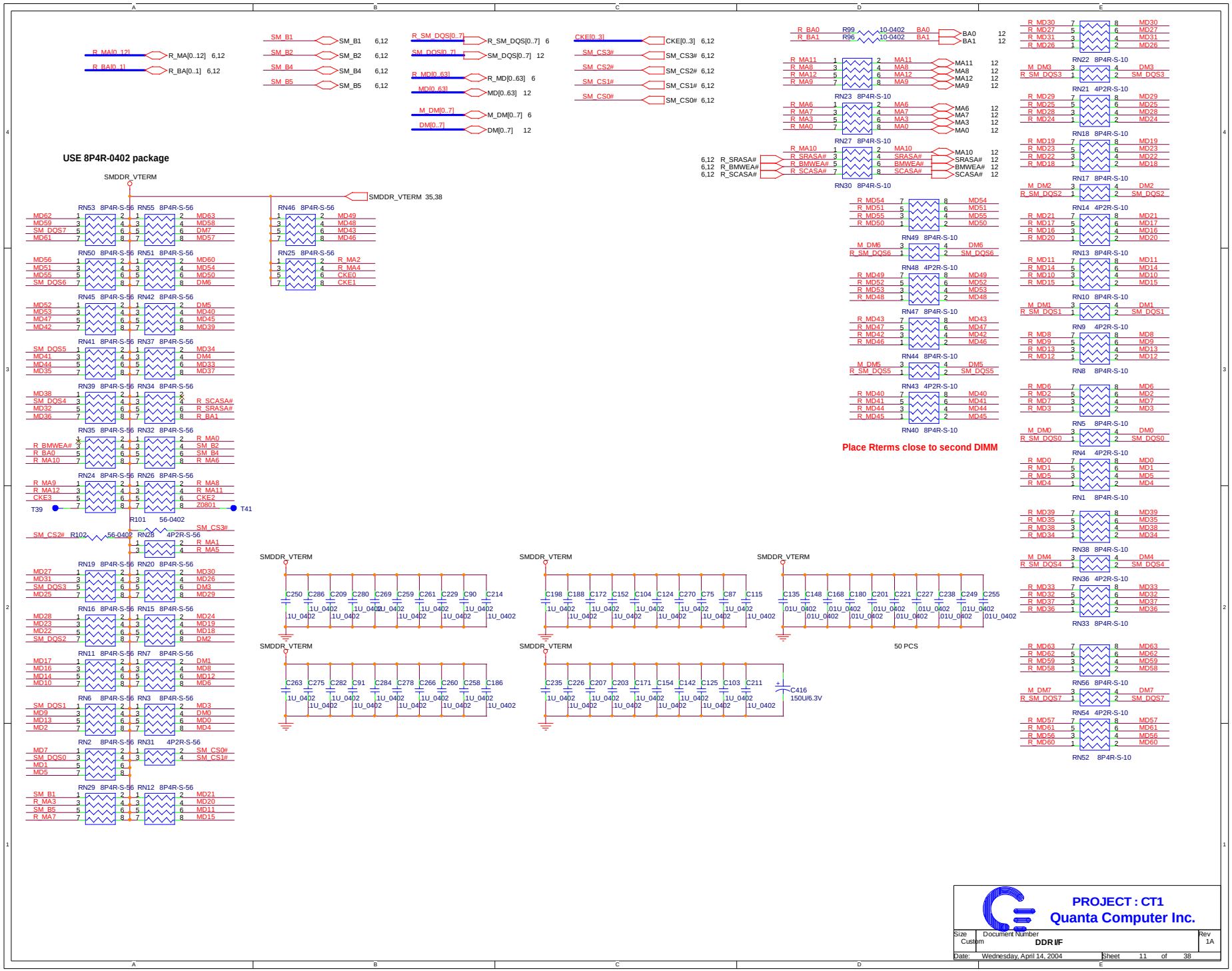

PDF created with pdfFactory trial version www.pdffactory.com

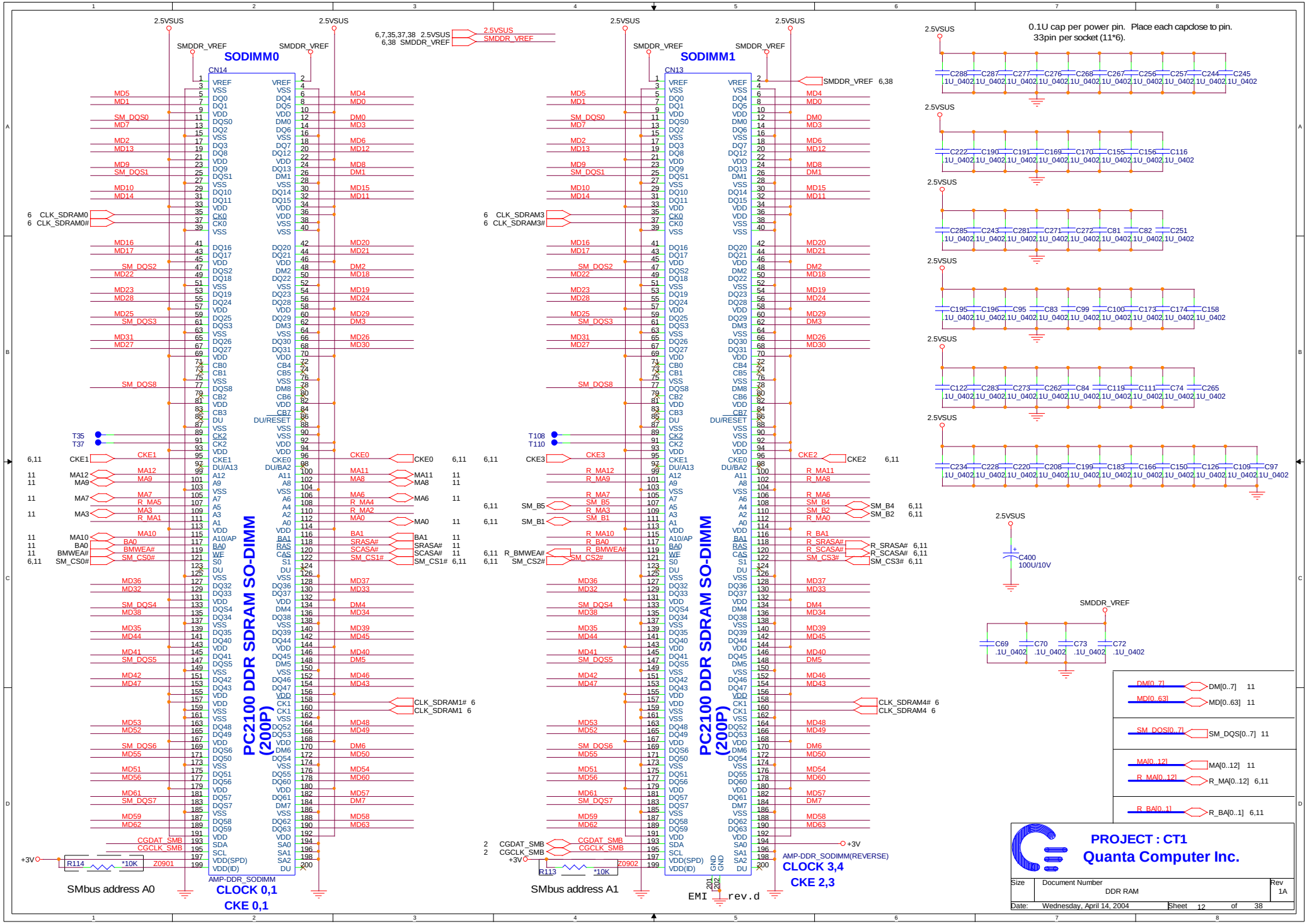

PDF created with pdfFactory trial version www.pdffactory.com

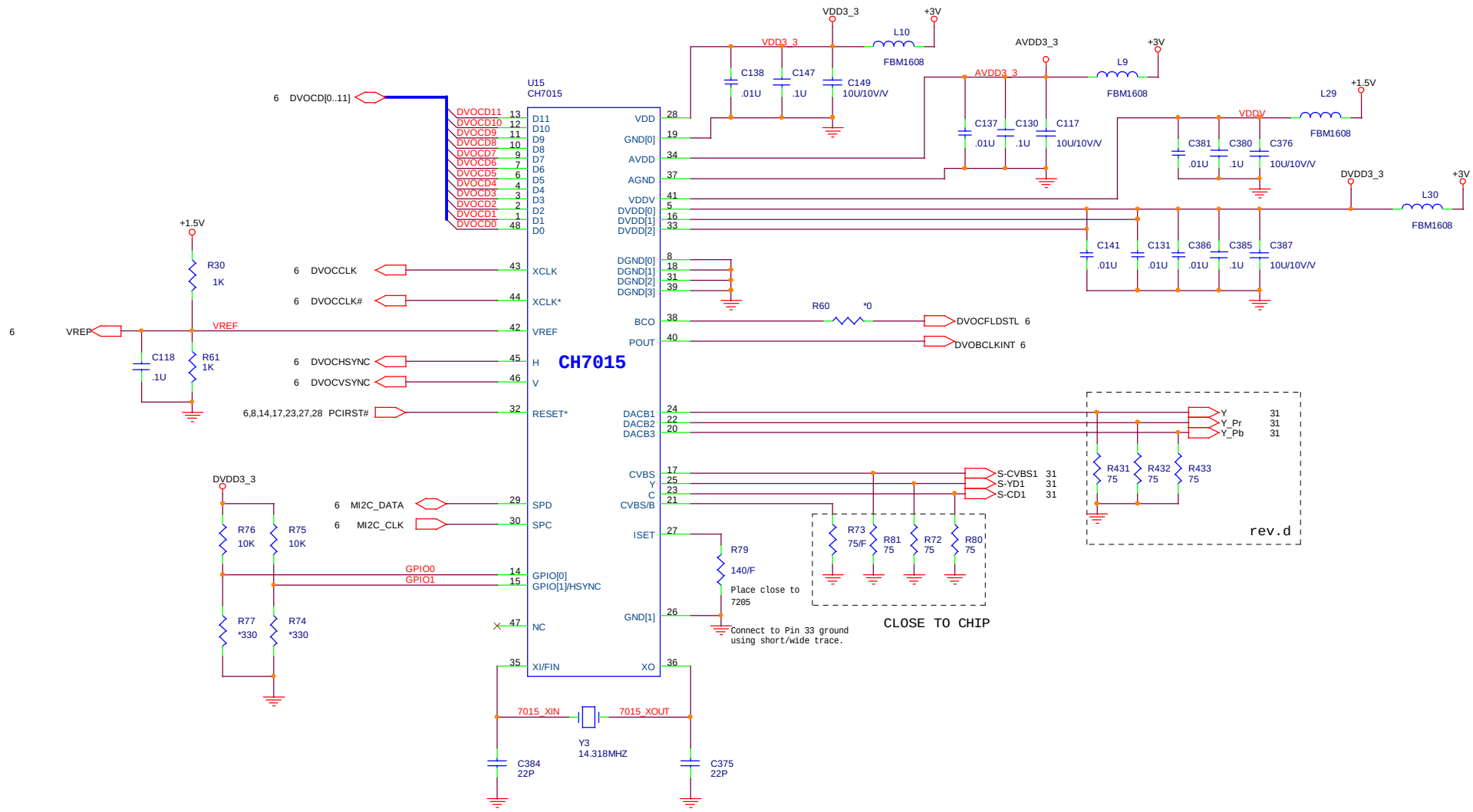

GPIO[1:0] Pull Up and Pull Down TV output option will be defined later by SW group.

PROJECT : CT1
Quanta Computer Inc.

Size	Document Number	Rev
Custom		1A

Date: Wednesday, April 14, 2004 Sheet 13 of 38

PDF created with pdfFactory trial version www.pdffactory.com

MINI PCI TYPE III SLOT

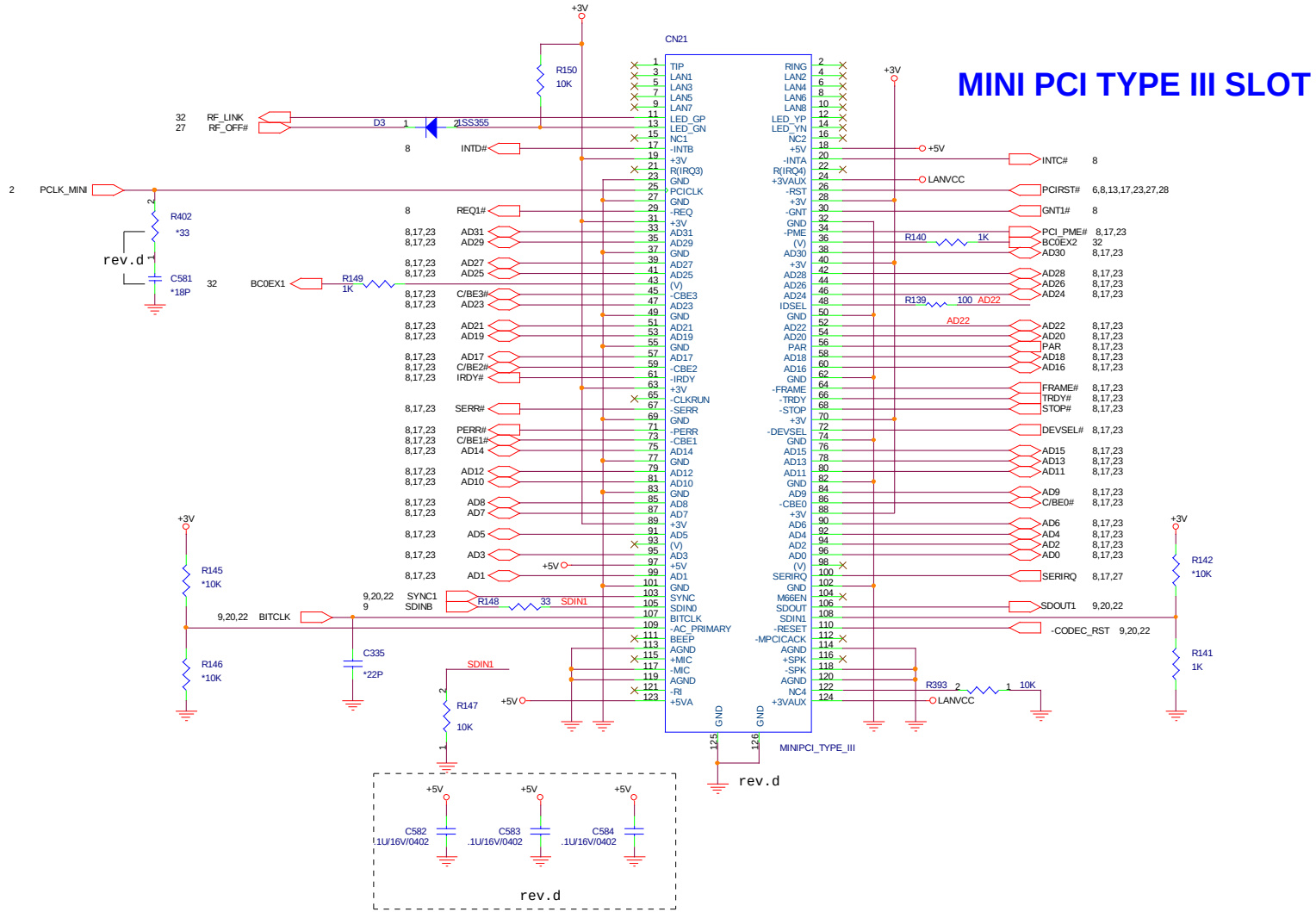

PROJECT : CT1
Quanta Computer Inc.

Size	Document Number	Rev
Custom		1A

Date: Wednesday, April 14, 2004 Sheet 14 of 38

PDF created with pdfFactory trial version www.pdffactory.com

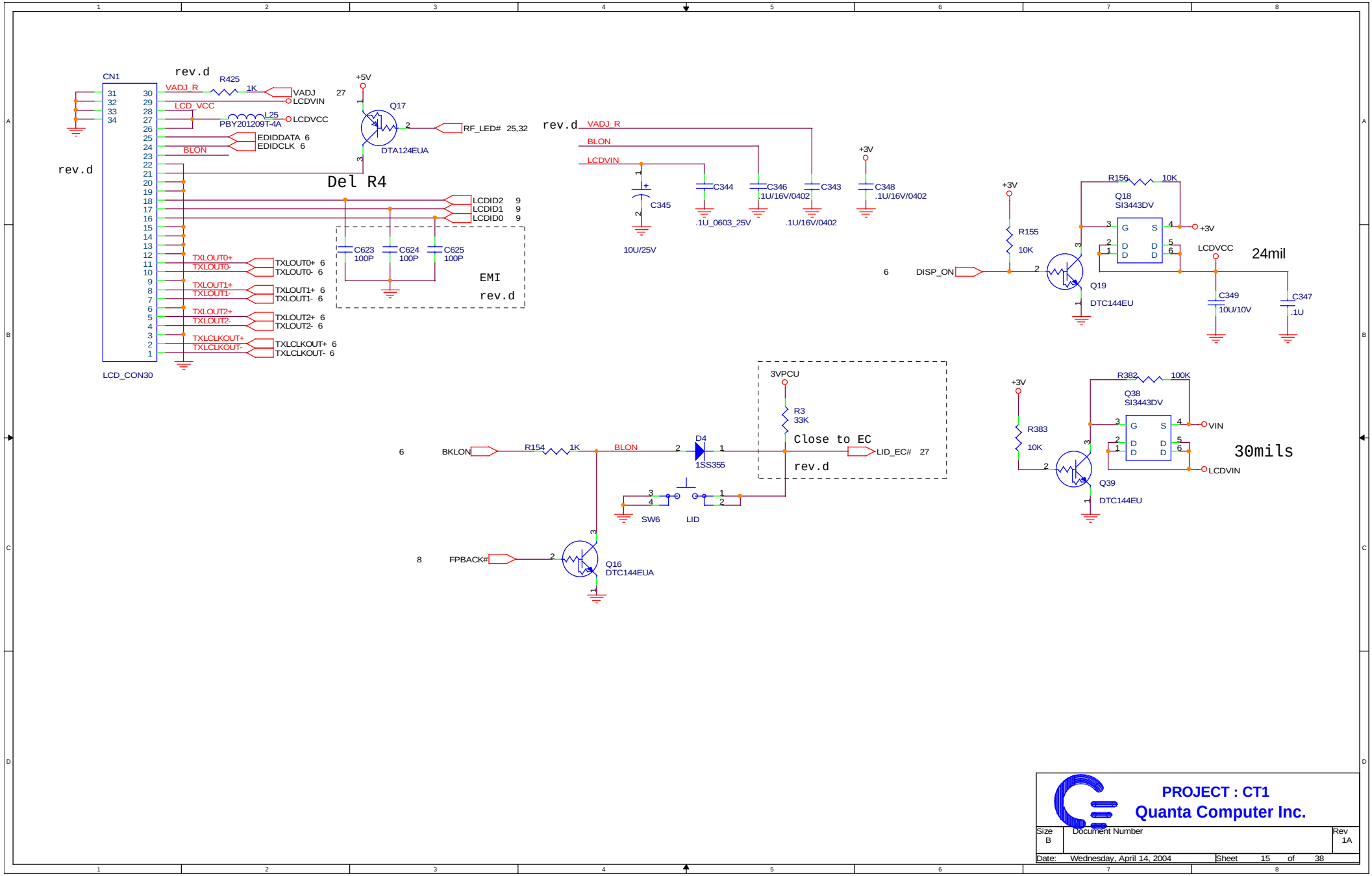

PDF created with pdfFactory trial version www.pdffactory.com

CardBus Connector

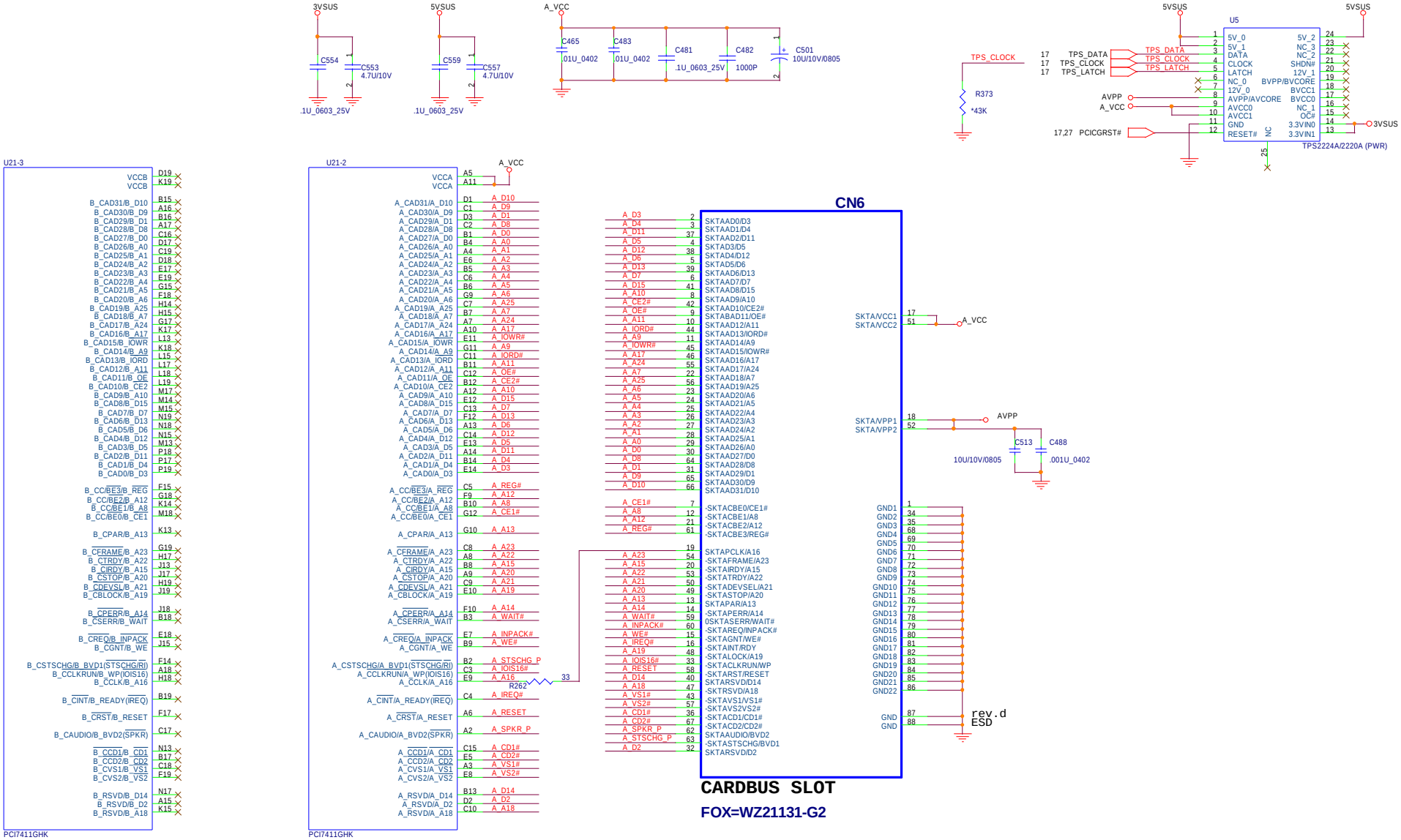

PROJECT : CT1
Quanta Computer Inc.

Size	Document Number	Rev
Custom		1A

Date: Wednesday, April 14, 2004 Sheet 16 of 38

PDF created with pdfFactory trial version www.pdffactory.com

CardBus

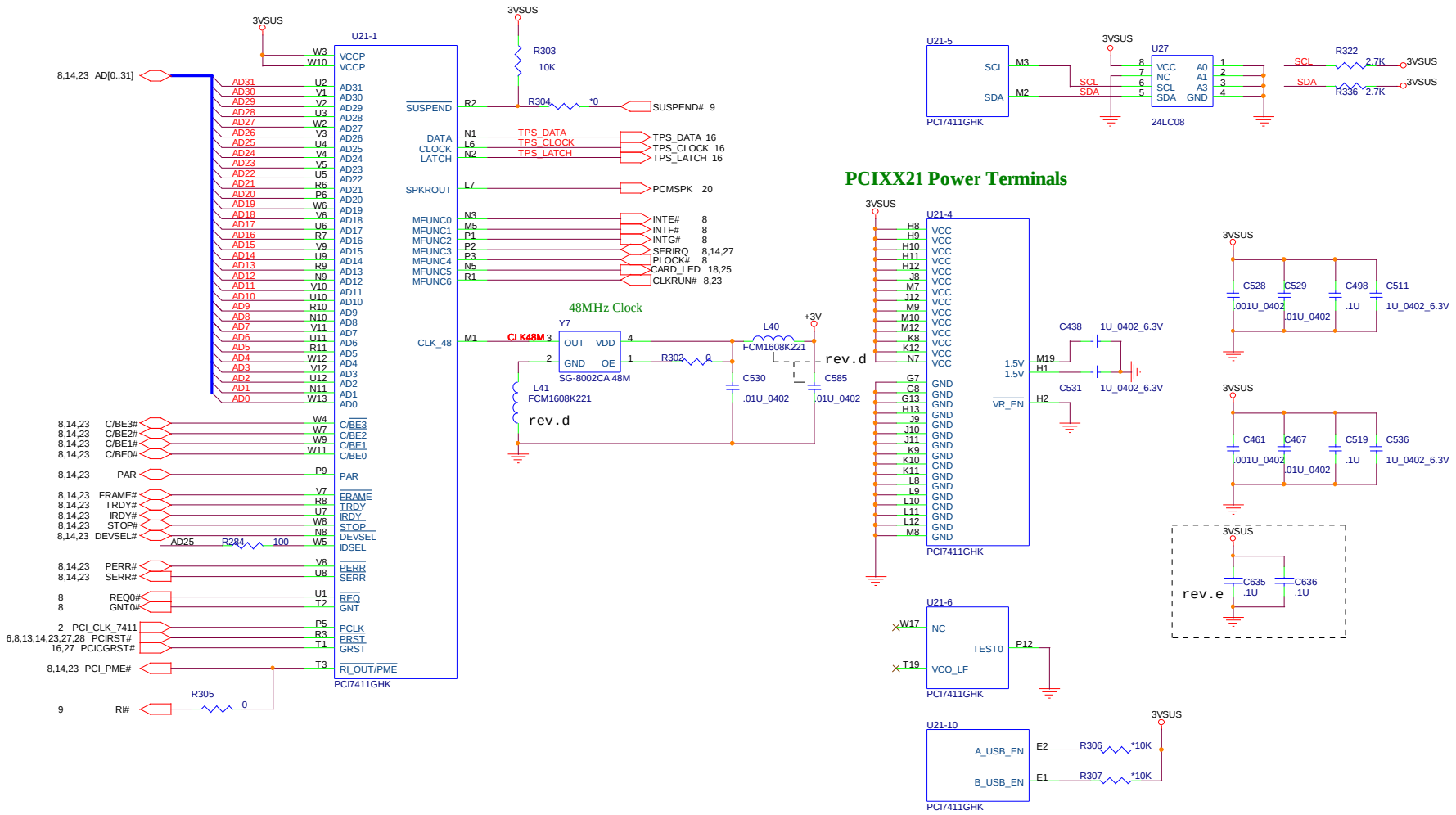

PROJECT : CT1
Quanta Computer Inc.

Size	Document Number	Rev
Custom		1A

Date: Wednesday, April 14, 2004 Sheet 17 of 38

PDF created with pdfFactory trial version www.pdffactory.com

CARD POWER CONTROL

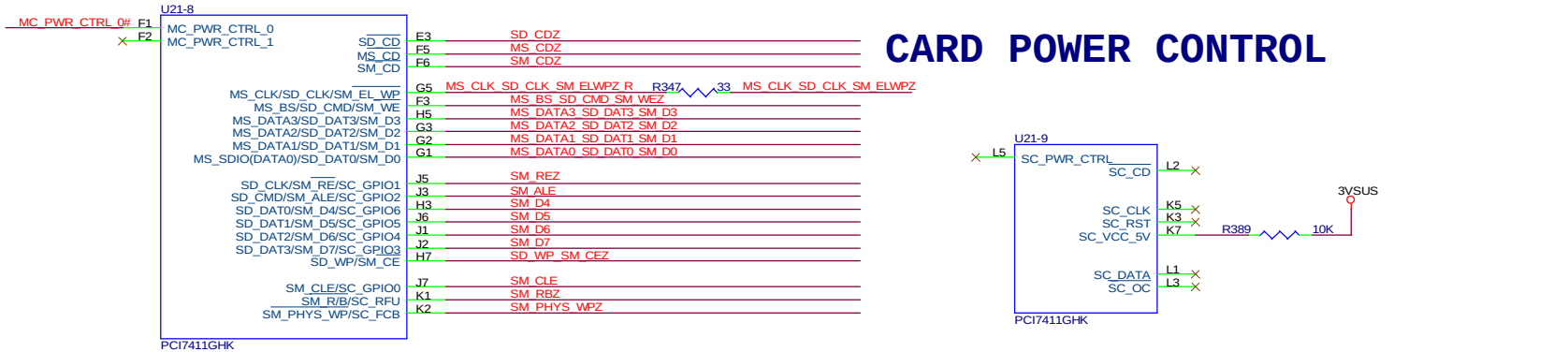

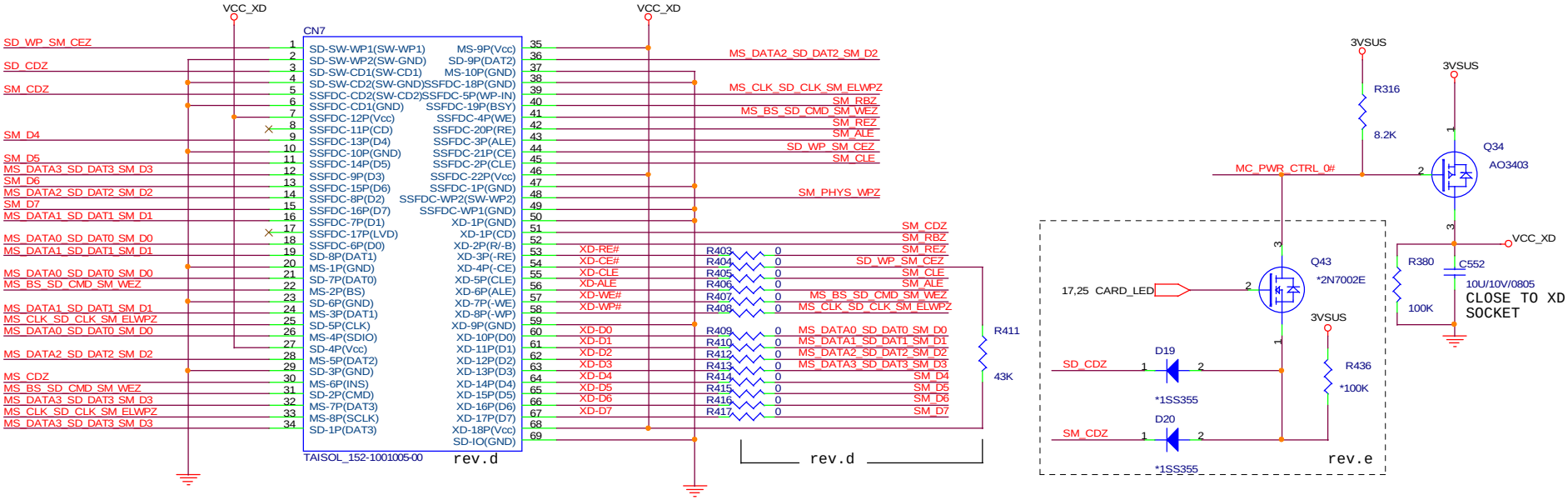

5 IN1 CARD READER

PROJECT : CT1
Quanta Computer Inc.

Size	Document Number	Rev
Custom		1A

Date: Wednesday, April 14, 2004 Sheet 18 of 38

PDF created with pdfFactory trial version www.pdffactory.com

IEEE 1394a

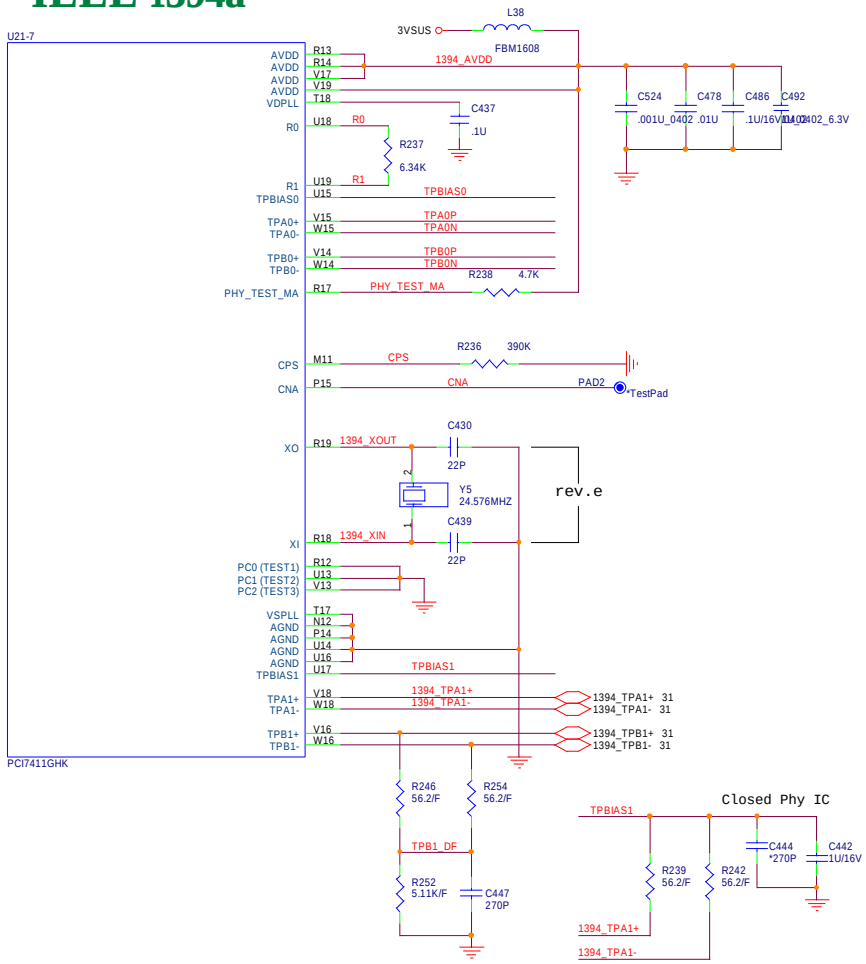

IEEE 1394 CONNECTOR

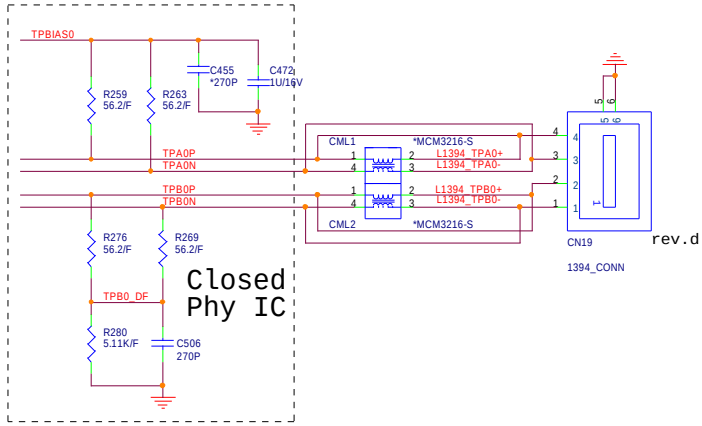

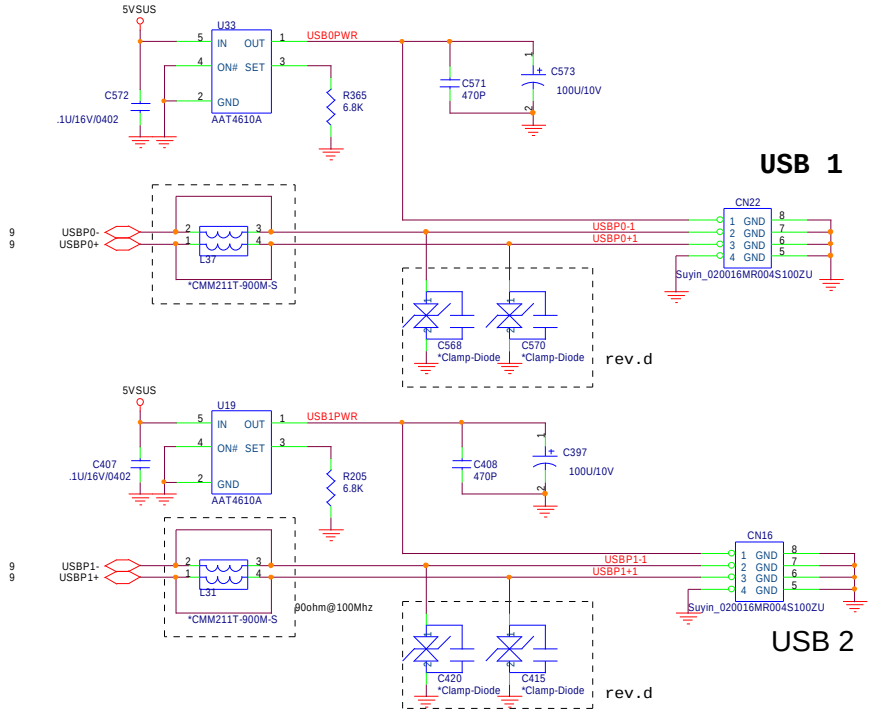

PROJECT : CT1
Quanta Computer Inc.

Size	Document Number	Rev
Custom		1A

Date: Wednesday, April 14, 2004 Sheet 19 of 38

PDF created with pdfFactory trial version www.pdffactory.com

The AMC20493-001 modem is used for mother board family MBAMC20493-010.

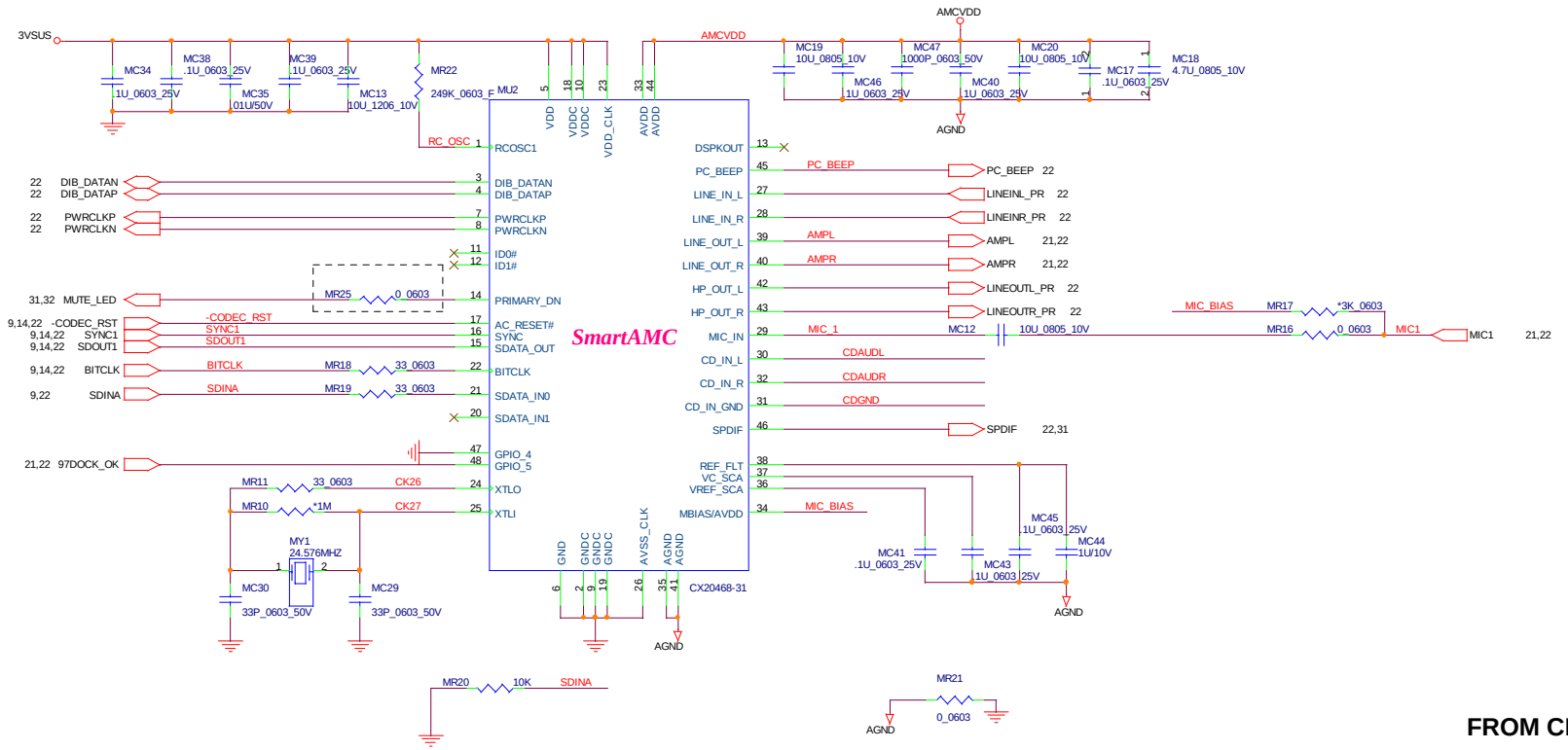

FROM CD-ROM

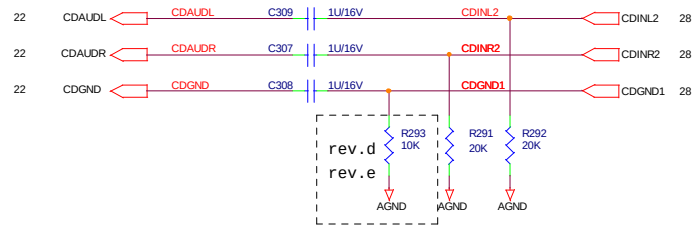

PC SPEAKER

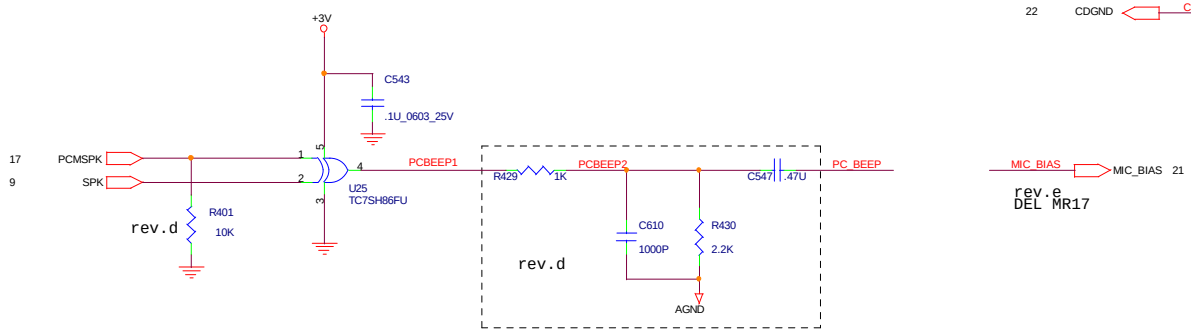

PROJECT : CT1
Quanta Computer Inc.

Size	Document Number	Rev
	AMC97 CODEC	1A

Date: Wednesday, April 14, 2004 Sheet 20 of 38

PDF created with pdfFactory trial version www.pdffactory.com

AUDIO AMPLIFIER

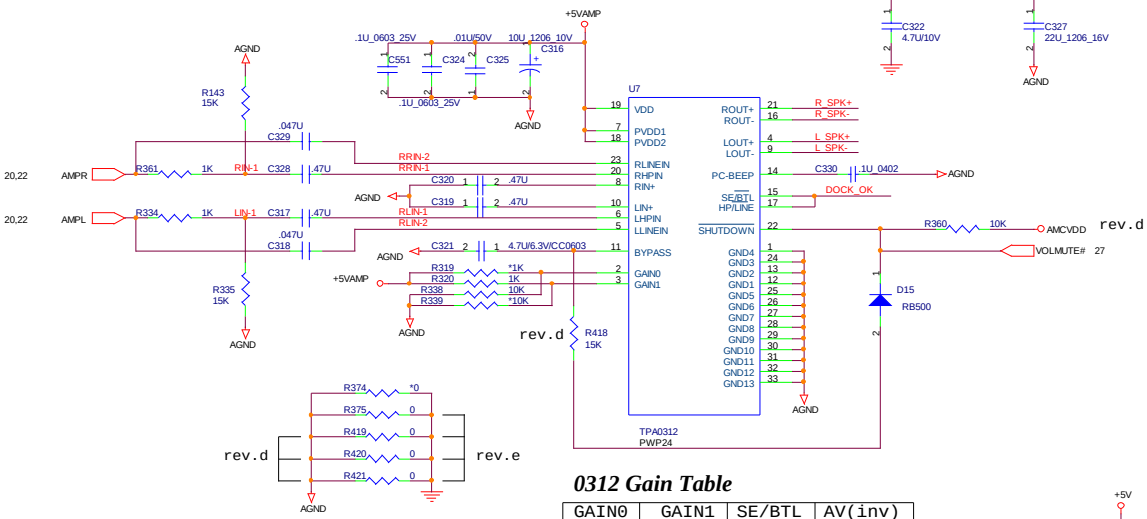

0312 Gain Table

GAIN0	GAIN1	SE/BTL	AV(inv)
0	0	0	6 dB
0	1	0	10 dB
1	0	0	15.6 dB
1	1	0	21.6 dB
X	X	1	4.1 dB

SPEAKER OUT

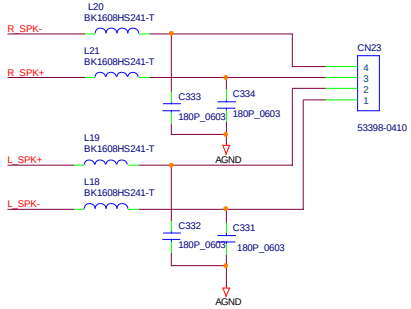

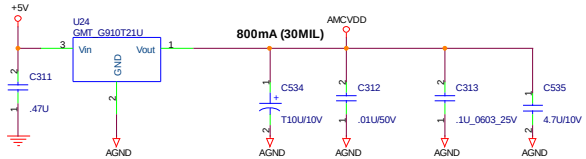

2ND HEADPHONE OUT

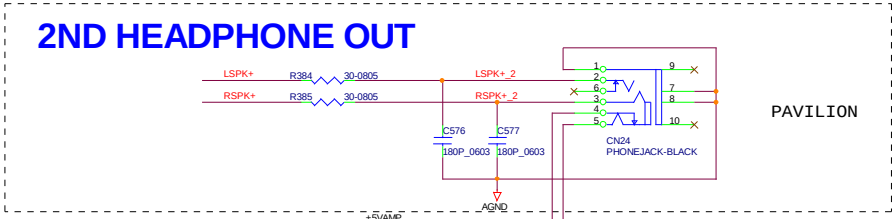

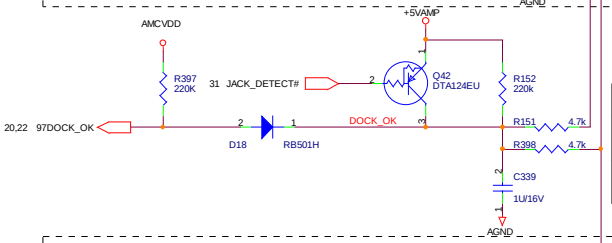

	PAVILION	PRESARIO
R151	✓	✗
R398	✗	✓

HEADPHONE OUT

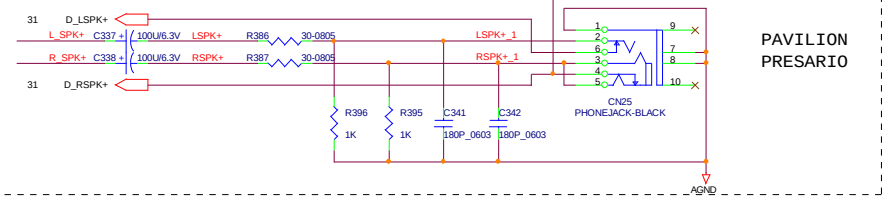

MICROPHONE

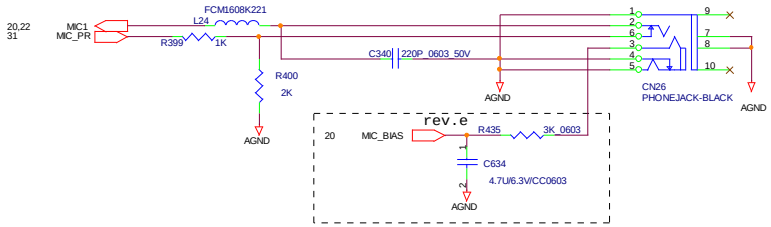

PROJECT : CT1
Quanta Computer Inc.

Size	Document Number	Rev
	AUDIO AMP_ TI-TPA0312	1A

Date: Wednesday, April 14, 2004 Sheet 21 of 38

PDF created with pdfFactory trial version www.pdffactory.com

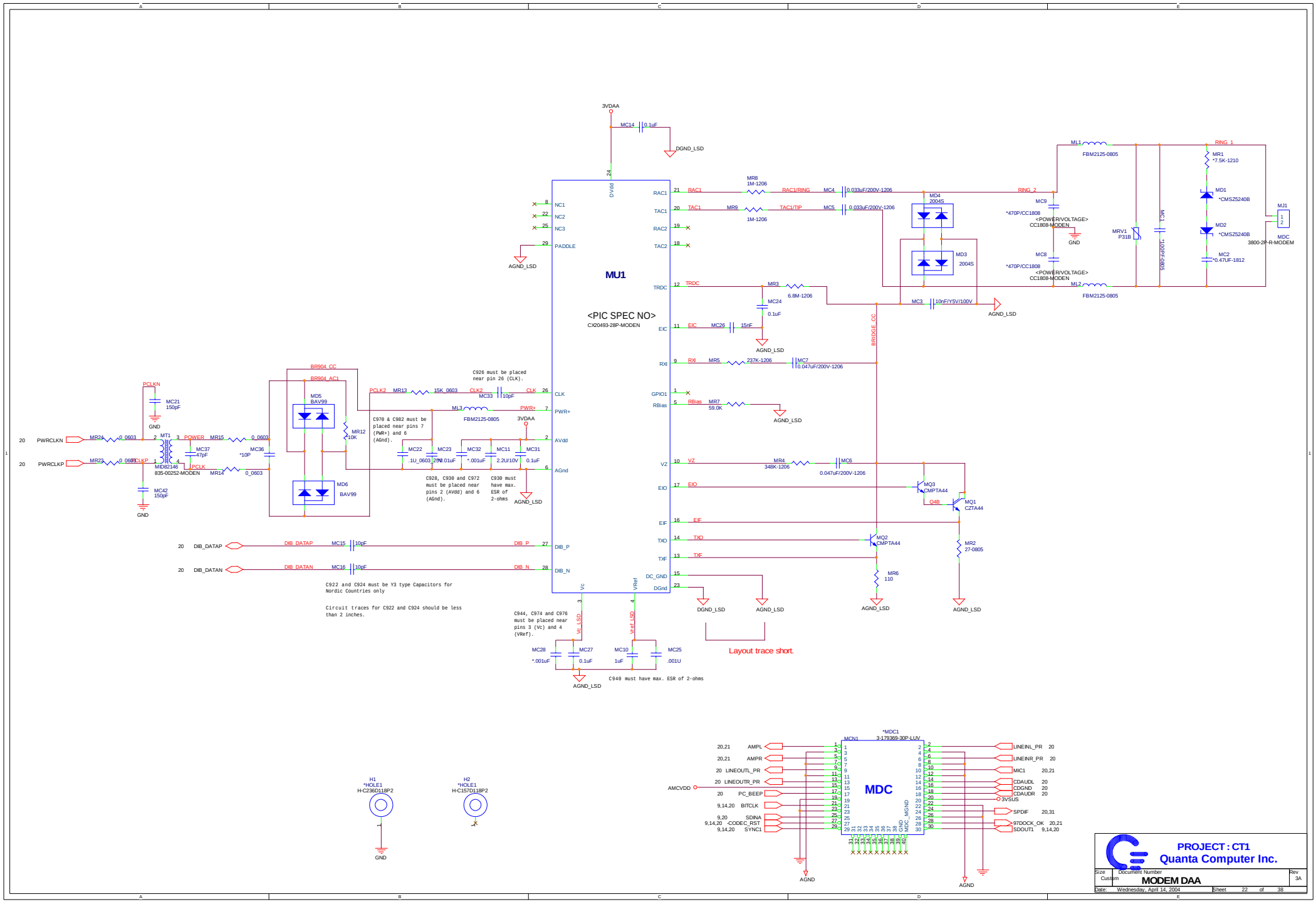

PDF created with pdfFactory trial version www.pdffactory.com

	8100CL(10/100M)	8110SB(1G)
DVDD33	3.3VD 26,41,56,71,84,94,107	3.3VD 26,41,56,71,84,94,107
AVDDL	3.3VA 3,7,20	2.5VA 3,7,20,16
DVDD	2.5VD 32,54,78,99	1.8VD 32,54,78,99,24,45,64,110,116,126
AVDD25	2.5VA 12	NC
AVDDH	NC	3.3VA 10,120

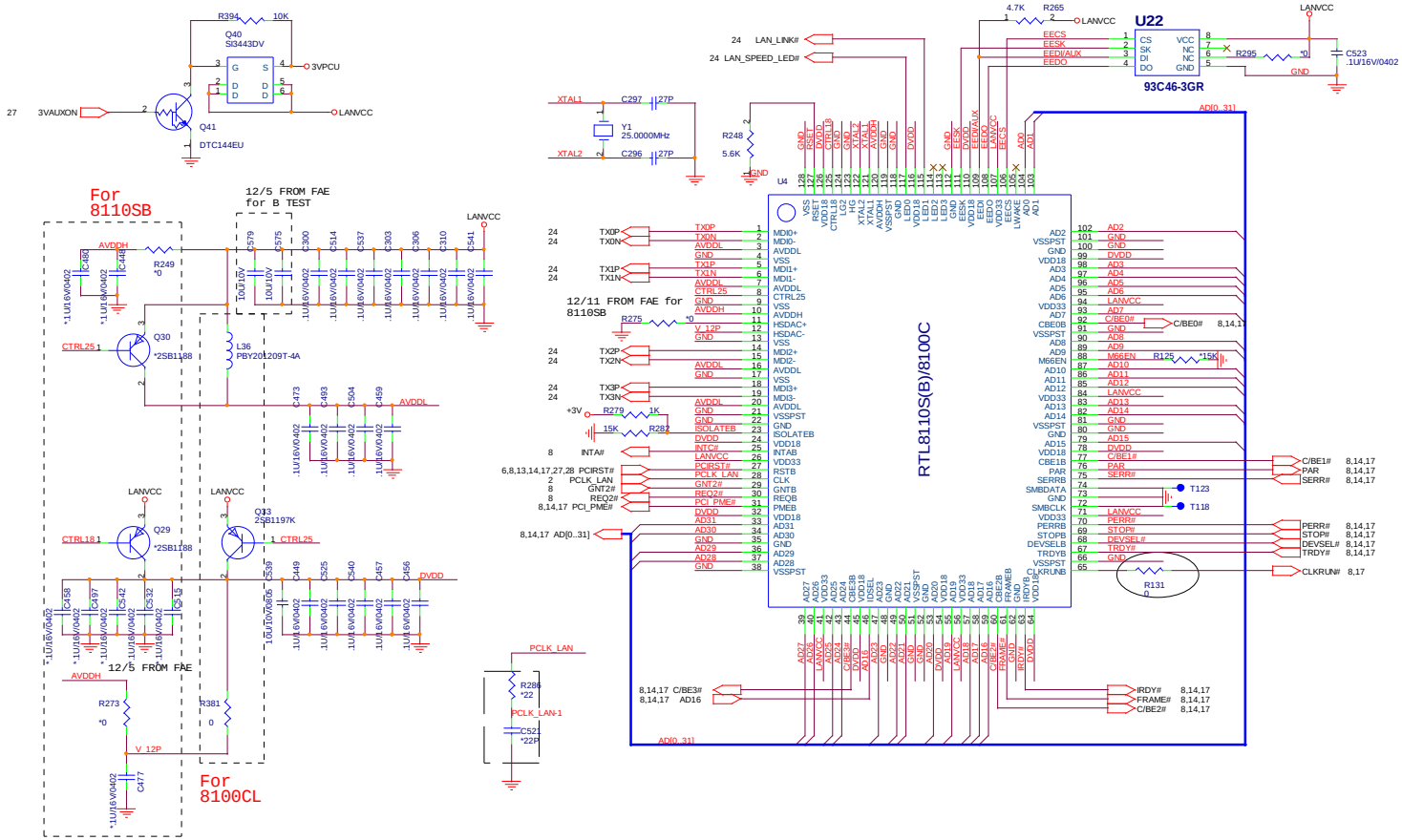

PROJECT : CT1
Quanta Computer Inc.

Size	Document Number	Rev
C	RTL8100CL	1A

Date: Wednesday, April 14, 2004 Sheet 23 of 38

PDF created with pdfFactory trial version www.pdffactory.com

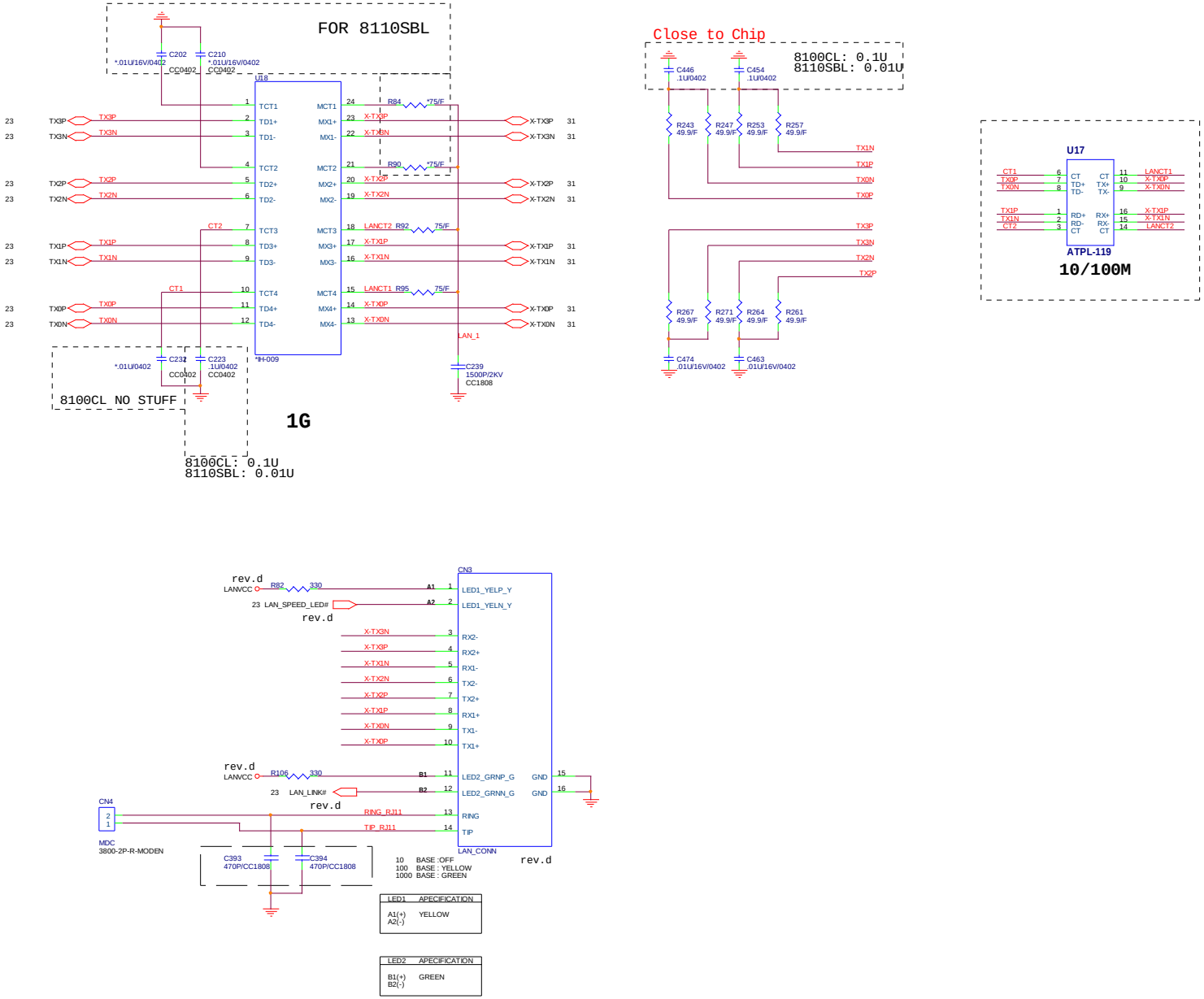

PROJECT : CT1
Quanta Computer Inc.

Size	Document Number	Rev
C		1A

Date: Wednesday, April 14, 2004 Sheet 24 of 38

PDF created with pdfFactory trial version www.pdffactory.com

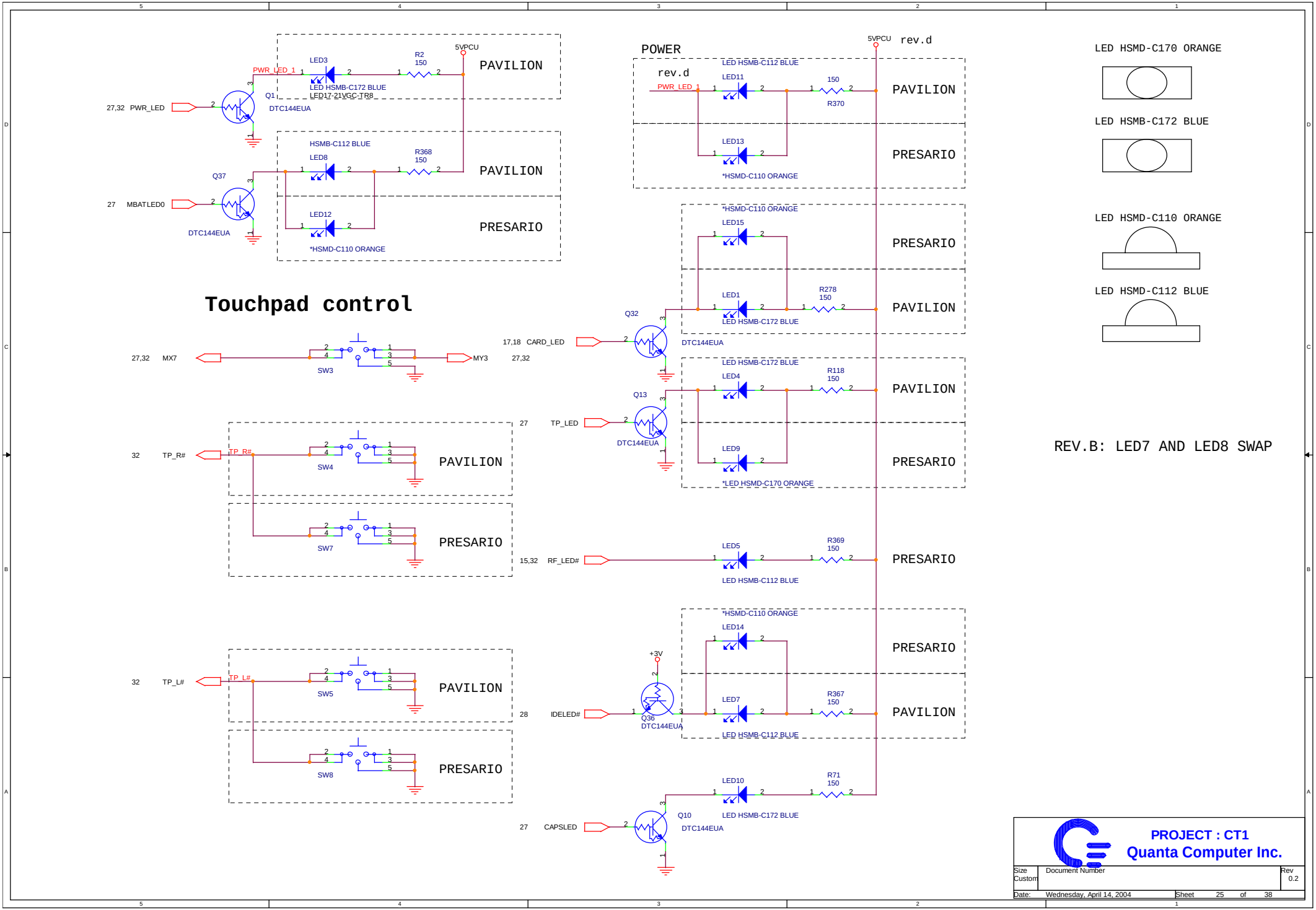

PDF created with pdfFactory trial version www.pdffactory.com

8Mbit (1M Byte), TSSOP40

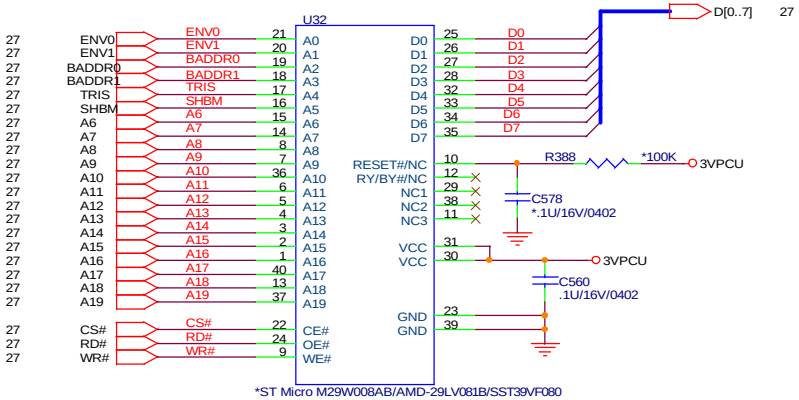

*ST Micro M29W008AB/AMD-29LV081B/SST39VF080

AMD :Pin 10 is RESET# ; Pin12 is RY/BY#
SST :Pin10,12 are NC

1.AMD-29LV081B require MAX 500nS Tready for it's hardware reset.And MAX6326_UR29 has >100mS reset timing.So we can tie it's reset# pin to +3VALW directly.
2.SIO has internal 20 mS delay of VCC1_PWROK

4Mbit (512k Byte), TSSOP32

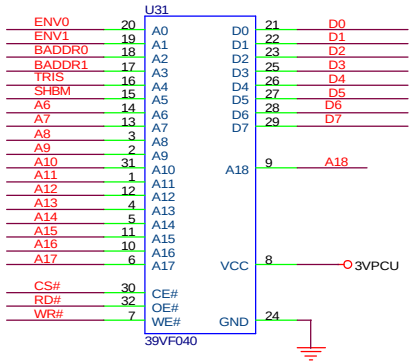

PROJECT : CT1
Quanta Computer Inc.

Size	Document Number	Rev
B		1A

Date: Wednesday, April 14, 2004 Sheet 26 of 38

PDF created with pdfFactory trial version www.pdffactory.com

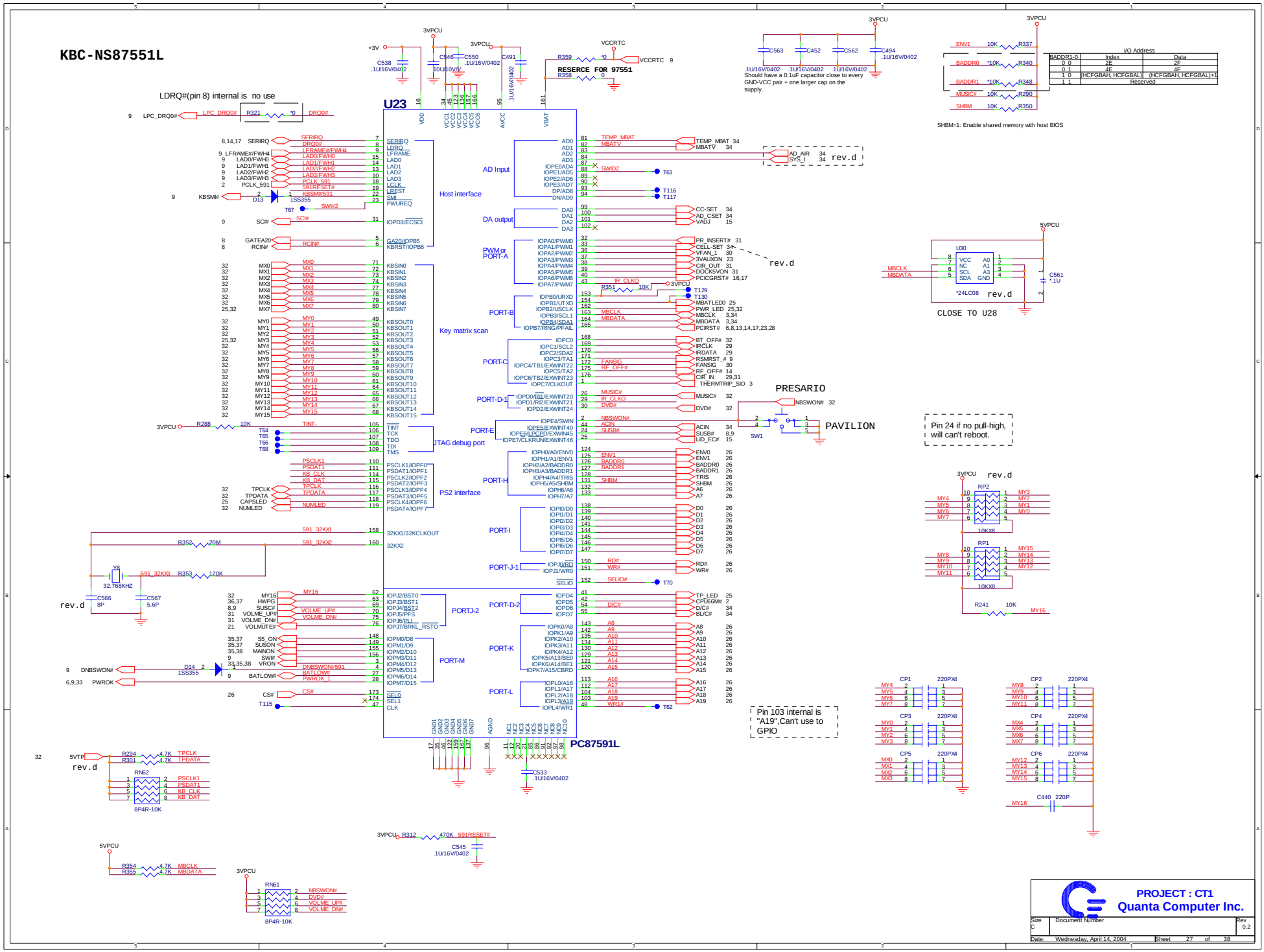

PDF created with pdfFactory trial version www.pdffactory.com

CD-ROM

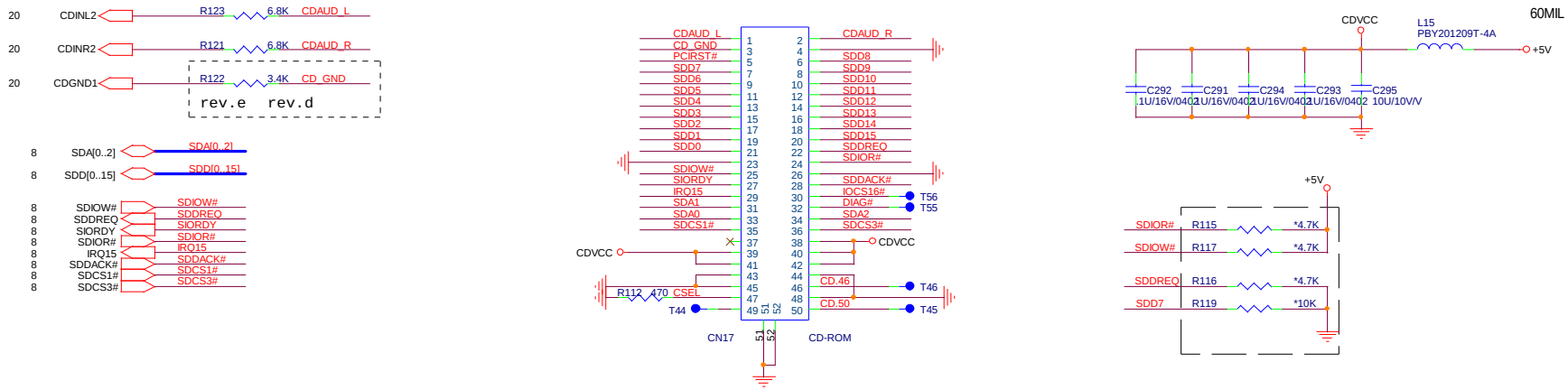

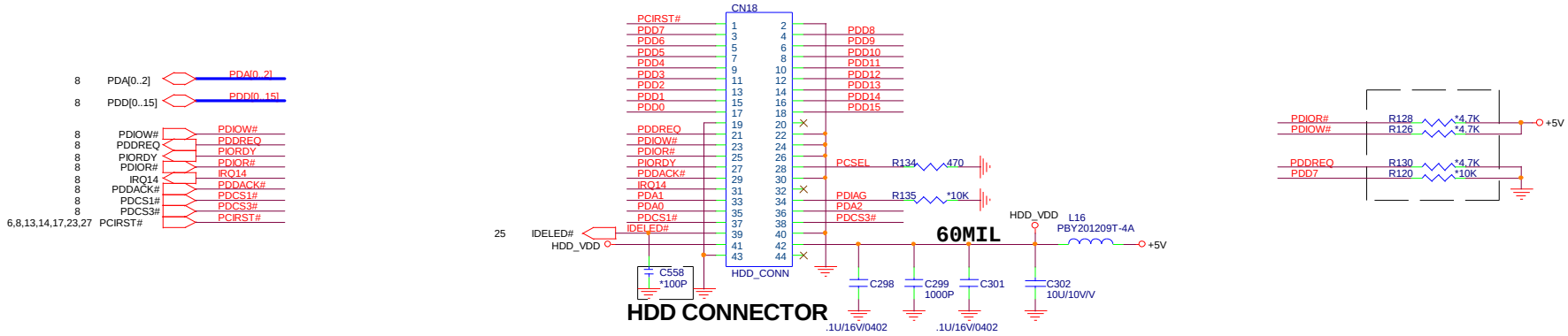

HDD CONNECTOR

PROJECT : CT1
Quanta Computer Inc.

Size	Document Number	Rev
Custom	HDD&ODD CONN.	1A

Date: Wednesday, April 14, 2004 Sheet 28 of 38

PDF created with pdfFactory trial version www.pdffactory.com

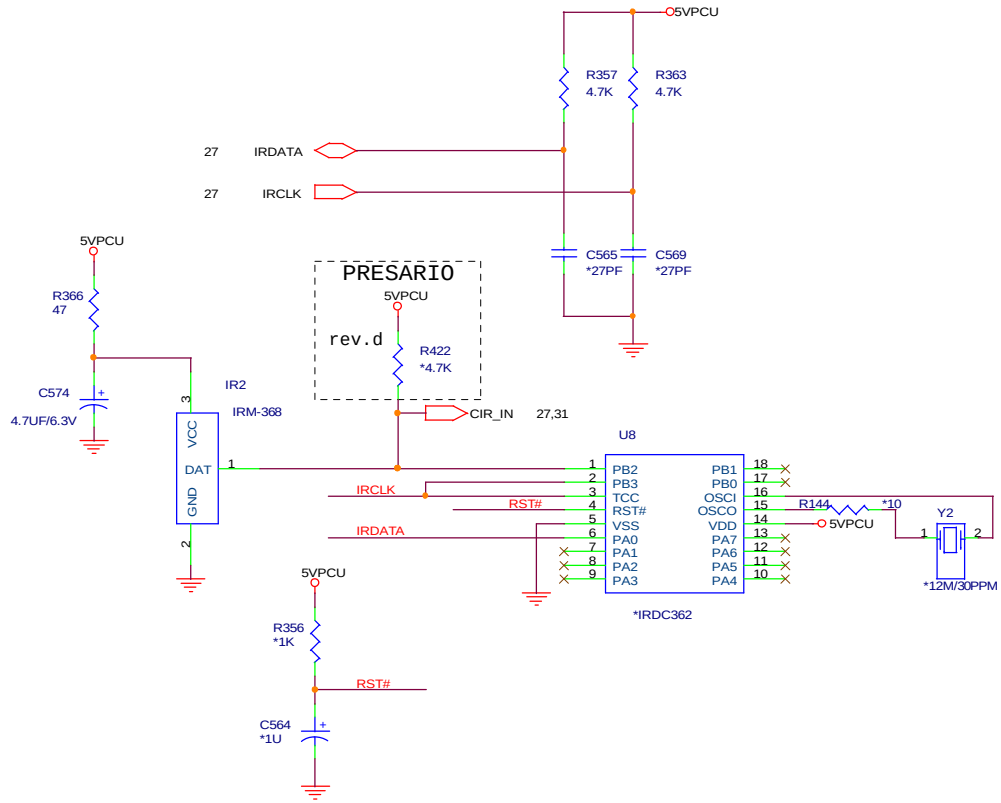

PROJECT : CT1
Quanta Computer Inc.

Size	Document Number	Rev
B		1A

Date: Wednesday, April 14, 2004 Sheet 29 of 38

PDF created with pdfFactory trial version www.pdffactory.com

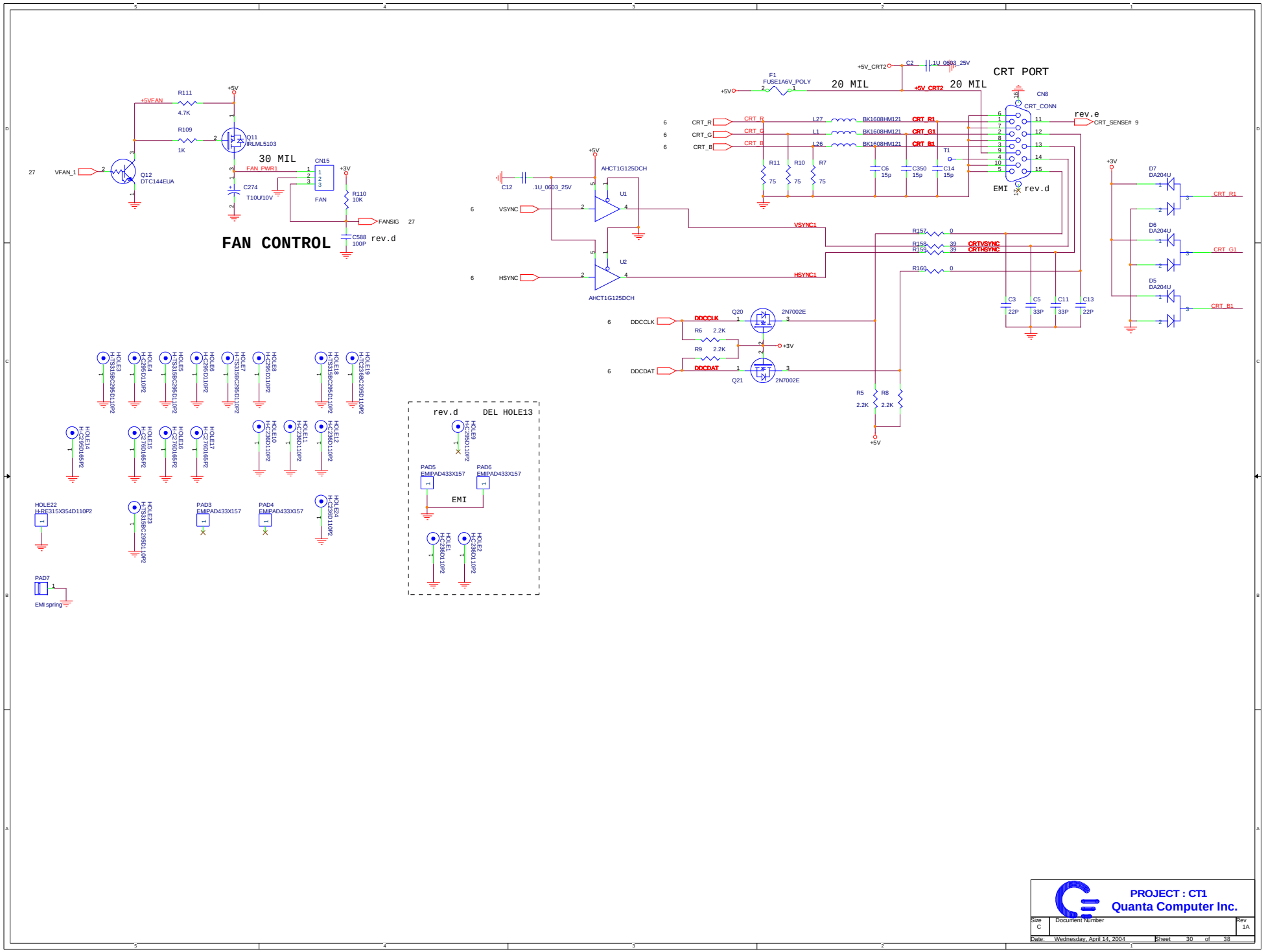

PDF created with pdfFactory trial version www.pdffactory.com

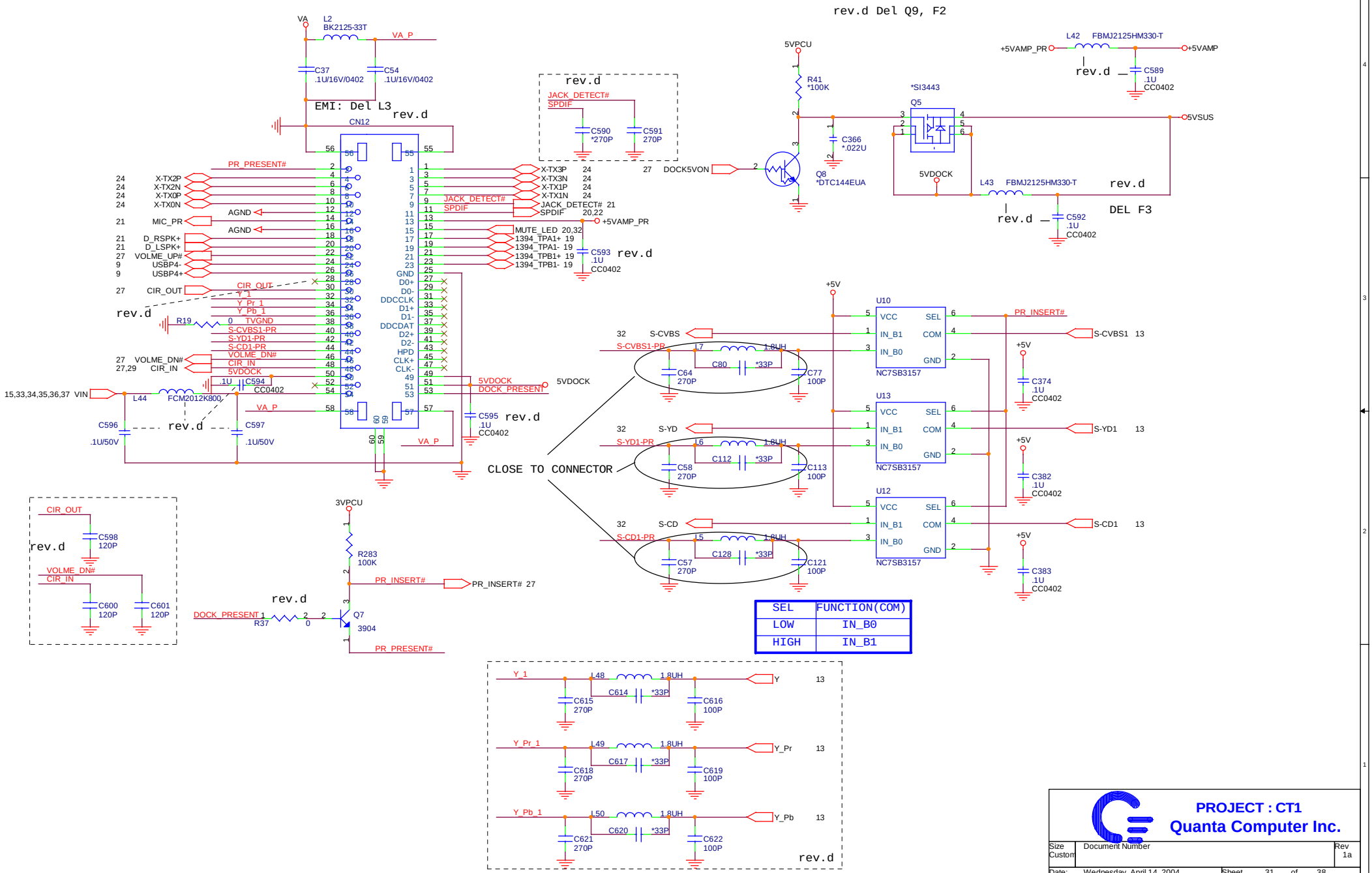

SEL	FUNCTION(COM)
LOW	IN_B0
HIGH	IN_B1

PDF created with pdfFactory trial version www.pdffactory.com

TOUCH PAD CONNECTOR

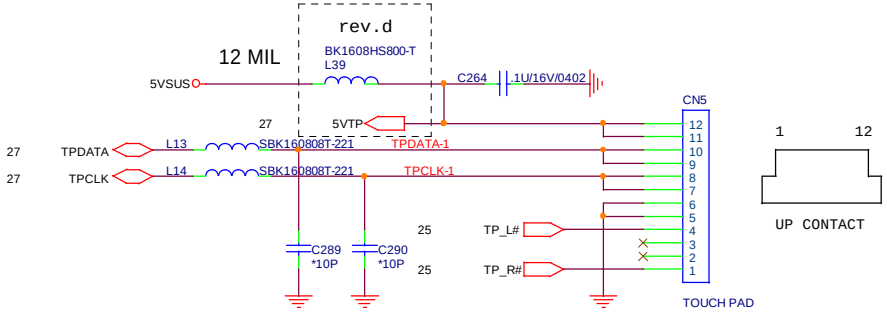

CHECK PIN DEFINE

KEYBOARD CONNECTOR

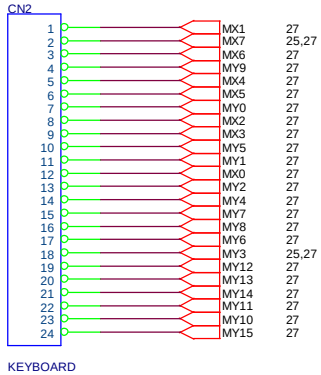

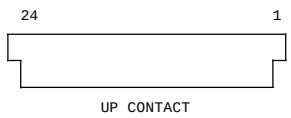

AV BOARD

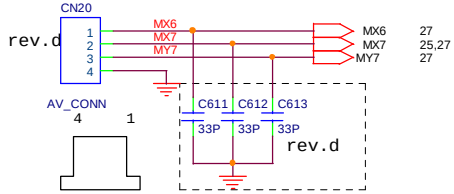

MX6	MX7
ENTER	MENU

POWER BOARD

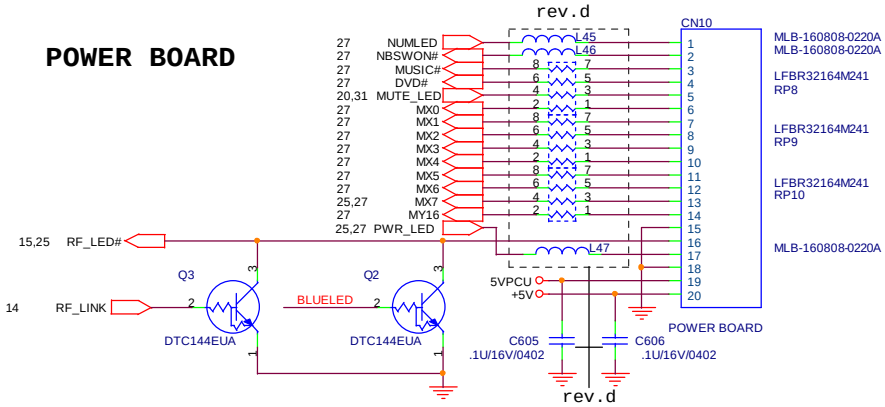

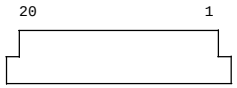

MX0	MX1	MX2	MX3	MX4	MX5	MX6	MX7
BACK	PLAY/PAUSE	FORWARE	STOP	VOL UP	MUTE	VOL DN	WIRELESS

DAUGHTER BOARD

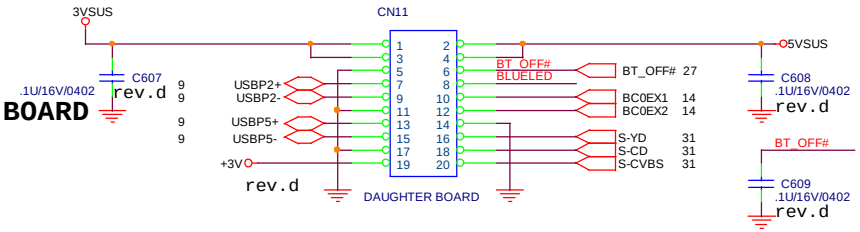

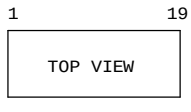

PROJECT : CT1
Quanta Computer Inc.

Size	Document Number	Rev
Custom	MDC	1A

Date: Wednesday, April 14, 2004 Sheet 32 of 38

PDF created with pdfFactory trial version www.pdffactory.com

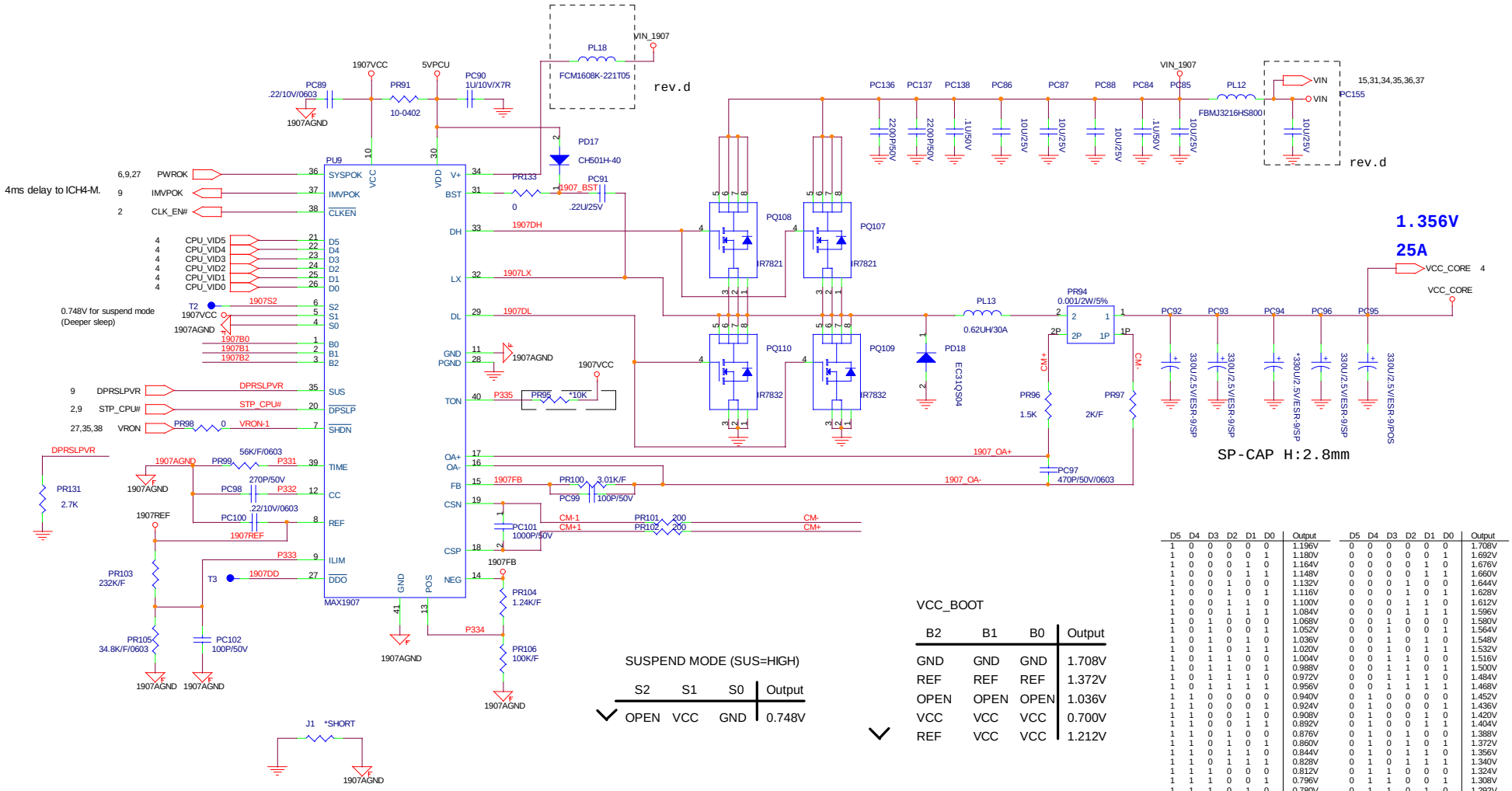

D5	D4	D3	D2	D1	D0	Output
1	0	0	0	0	0	1.196V
1	0	0	0	0	1	1.180V
1	0	0	0	1	0	1.164V
1	0	0	0	1	1	1.148V
1	0	0	1	0	0	1.132V
1	0	0	1	0	1	1.116V
1	0	0	1	1	0	1.100V
1	0	0	1	1	1	1.084V
1	0	1	0	0	0	1.068V
1	0	1	0	0	1	1.052V
1	0	1	0	1	0	1.036V
1	0	1	0	1	1	1.020V
1	0	1	1	0	0	1.004V
1	0	1	1	0	1	0.988V
1	0	1	1	1	0	0.972V
1	0	1	1	1	1	0.956V
1	1	0	0	0	0	0.940V
1	1	0	0	0	1	0.924V
1	1	0	0	1	0	0.908V
1	1	0	0	1	1	0.892V
1	1	0	1	0	0	0.876V
1	1	0	1	0	1	0.860V
1	1	0	1	1	0	0.844V
1	1	0	1	1	1	0.828V
1	1	1	0	0	0	0.812V
1	1	1	0	0	1	0.796V
1	1	1	0	1	0	0.780V
1	1	1	0	1	1	0.764V
1	1	1	1	0	0	0.748V
1	1	1	1	0	1	0.732V
1	1	1	1	1	0	0.716V
1	1	1	1	1	1	0.700V

D5	D4	D3	D2	D1	D0	Output
0	0	0	0	0	0	1.708V
0	0	0	0	0	1	1.692V
0	0	0	0	1	0	1.676V
0	0	0	0	1	1	1.660V
0	0	0	1	0	0	1.644V
0	0	0	1	0	1	1.628V
0	0	0	1	1	0	1.612V
0	0	0	1	1	1	1.596V
0	0	1	0	0	0	1.580V
0	0	1	0	0	1	1.564V
0	0	1	0	1	0	1.548V
0	0	1	0	1	1	1.532V
0	0	1	1	0	0	1.516V
0	0	1	1	0	1	1.500V
0	0	1	1	1	0	1.484V
0	0	1	1	1	1	1.468V
0	1	0	0	0	0	1.452V
0	1	0	0	0	1	1.436V
0	1	0	0	1	0	1.420V
0	1	0	0	1	1	1.404V
0	1	0	1	0	0	1.388V
0	1	0	1	0	1	1.372V
0	1	0	1	1	0	1.356V
0	1	0	1	1	1	1.340V
0	1	1	0	0	0	1.324V
0	1	1	0	0	1	1.308V
0	1	1	0	1	0	1.292V
0	1	1	0	1	1	1.276V
0	1	1	1	0	0	1.260V
0	1	1	1	0	1	1.244V
0	1	1	1	1	0	1.228V
0	1	1	1	1	1	1.212V

PDF created with pdfFactory trial version www.pdffactory.com

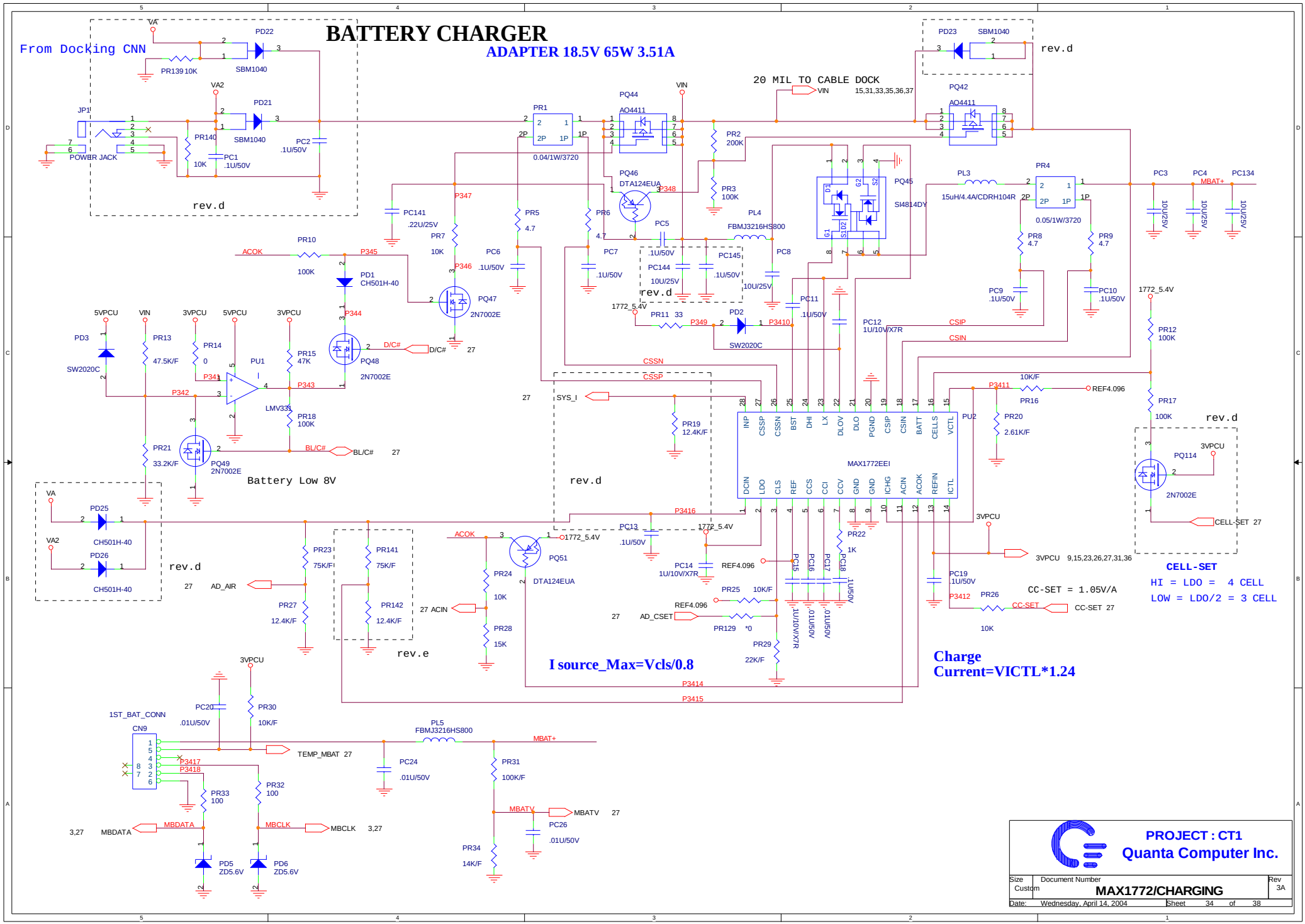

PDF created with pdfFactory trial version www.pdffactory.com

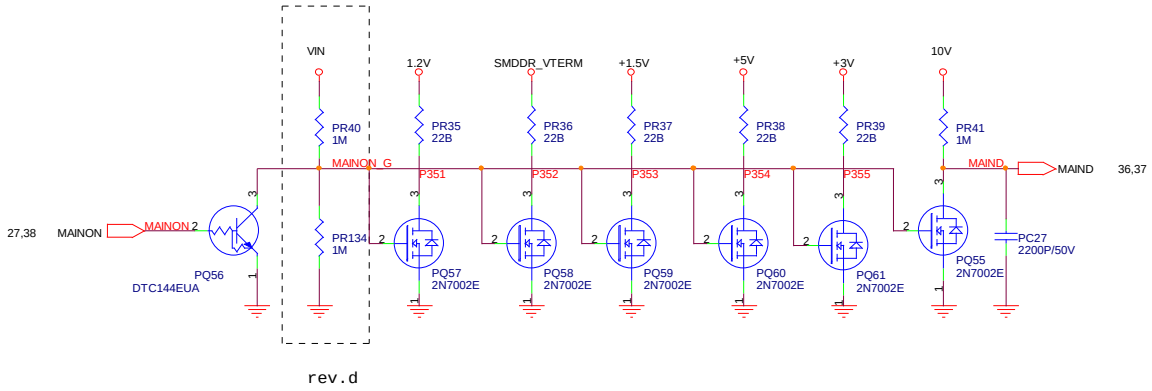

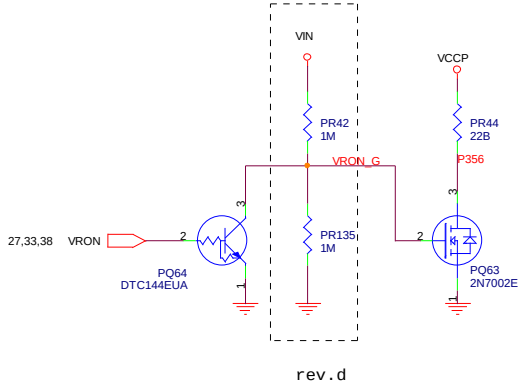

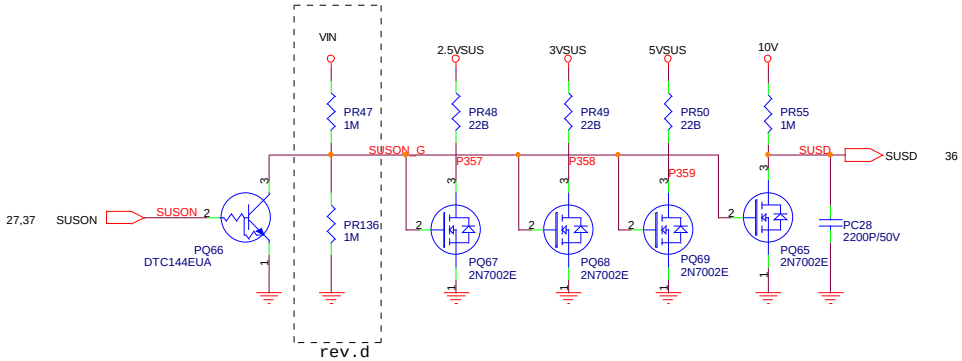

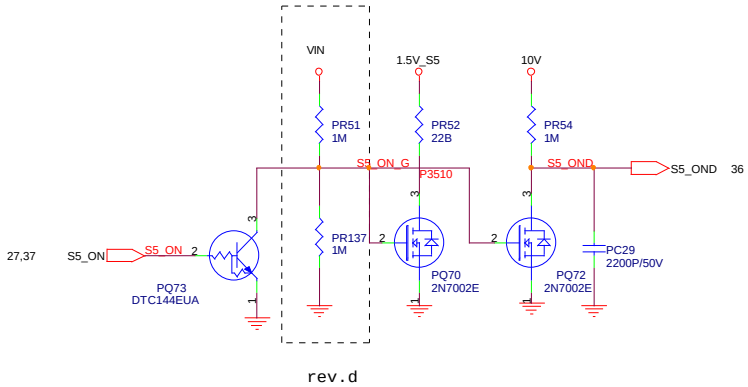

PROJECT : CT1
Quanta Computer Inc.

Size	Document Number	Rev
Custom	**DISCHARGE**	3A

Date: Wednesday, April 14, 2004 Sheet 35 of 38

PDF created with pdfFactory trial version www.pdffactory.com

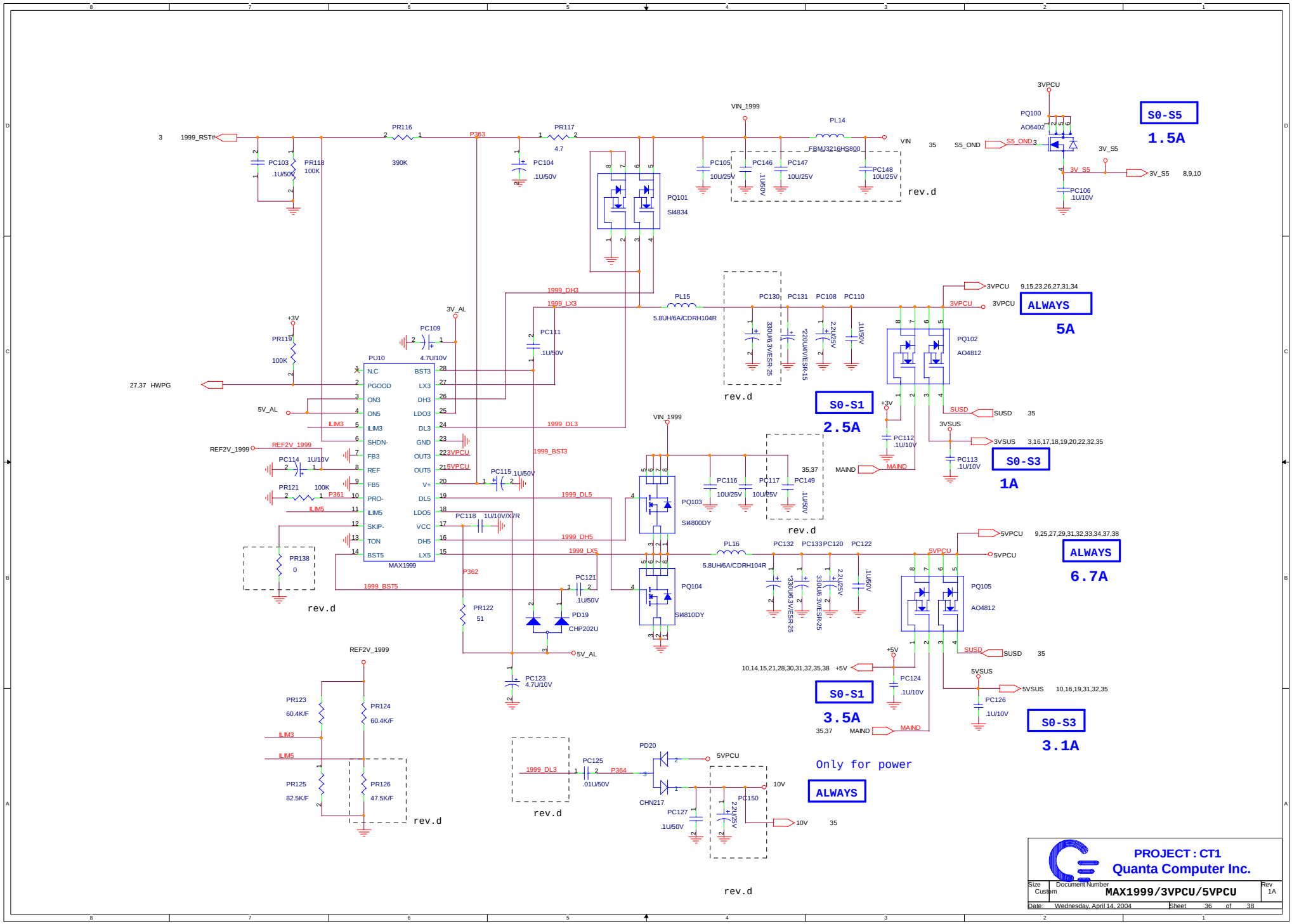

PDF created with pdfFactory trial version www.pdffactory.com

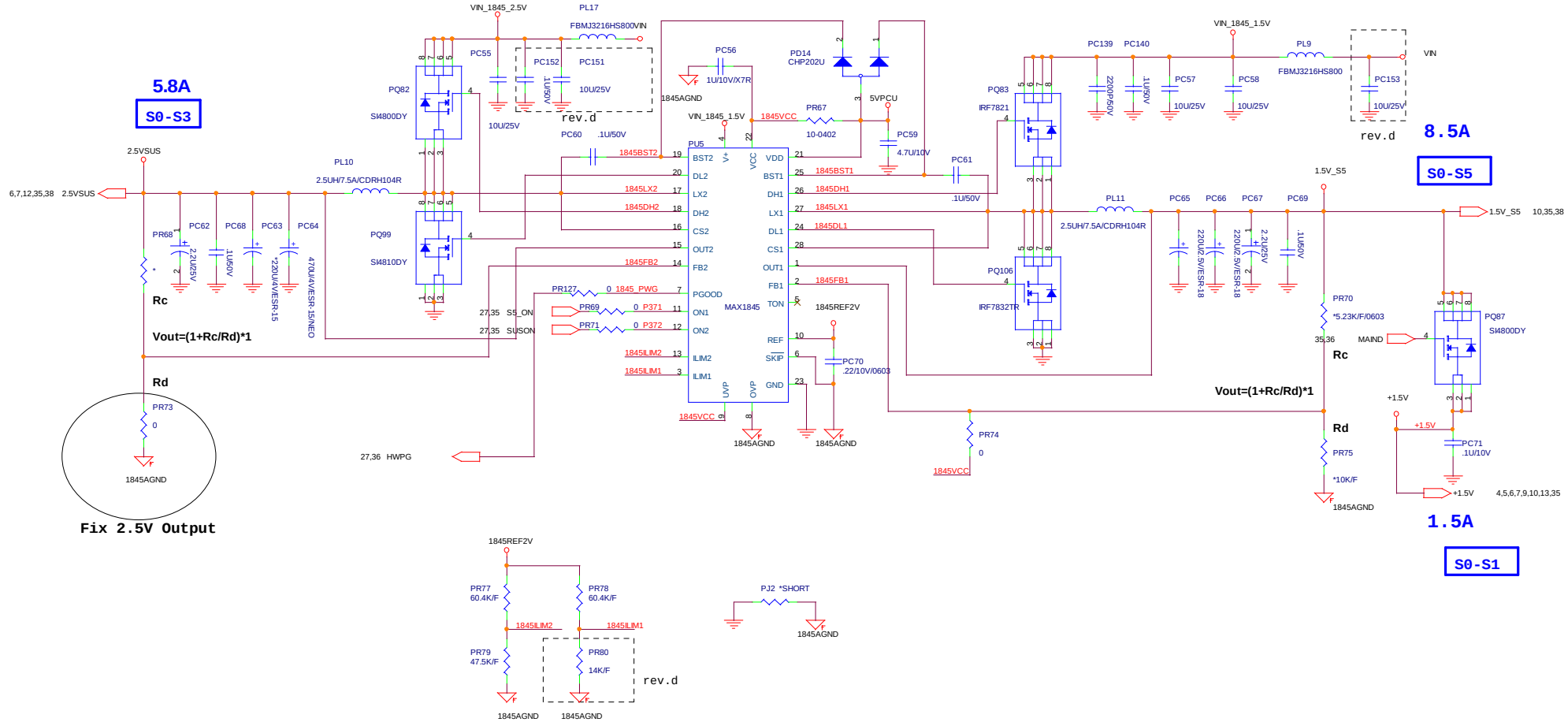

PDF created with pdfFactory trial version www.pdffactory.com

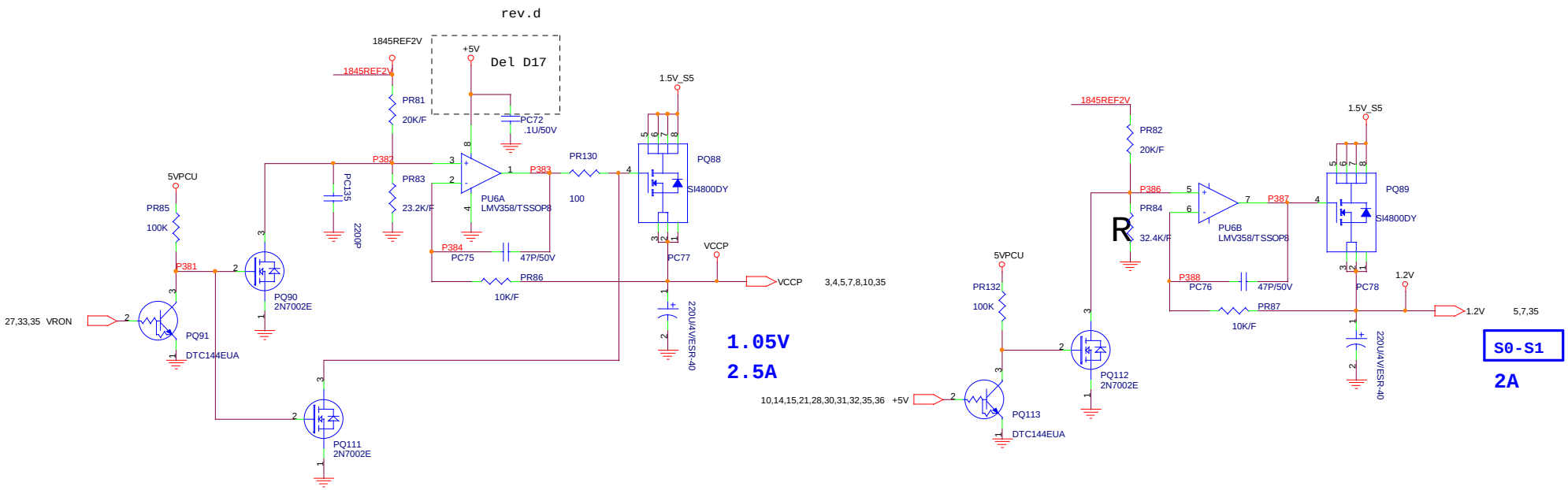

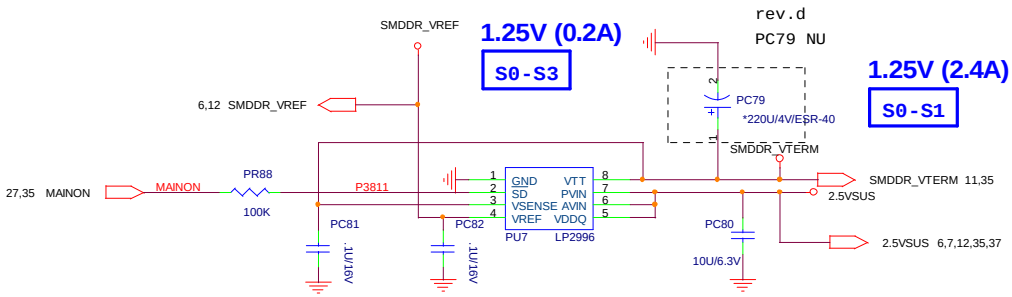

PROJECT : CT1
Quanta Computer Inc.

Size	Document Number	Rev
Custom	VCCP/1.2V/DDR-VTERM	1A

Date: Wednesday, April 14, 2004 Sheet 38 of 38

PDF created with pdfFactory trial version www.pdffactory.com