SAMSUNG PROPRIETARY
THIS DOCUMENT CONTAINS CONFIDENTIAL
PROPRIETARY INFORMATION THAT IS
SAMSUNG ELECTRONICS CO'S PROPERTY.
DO NOT DISCLOSE TO OR DUPLICATE FOR OTHERS
EXCEPT AS AUTHORIZED BY SAMSUNG.

Suzhou_UL

CPU : Intel Penryn
Chip Set : Intel Cantiga & ICH9M
Remarks : Montevina Platform

Model Name : Suzhou_UL_DDR3
PCB Code : GCE BA41-01213A
NAN BA41-01212A
HAN BA41-01214A

Dev. Step : P R
Revision : 1.0
T.R. Date : 2009.09.12

DESIGN	CHECK	APPROVAL

DESIGN SUN XIAO,	DATE 8/16/2009	TITLE SuZhou_UL COVER	SAMSUNG ELECTRONICS
CHECK WU SHIJIANG,	DEV. STEP PR		
APPROVAL BC LEE,	REV 1.0		PART NO. BA41-01213A
MODULE CODE	LAST EDIT November 25, 2009 15:50:02 PM		PAGE 1 OF 51

SAMSUNG PROPRIETARY
THIS DOCUMENT CONTAINS CONFIDENTIAL PROPRIETARY INFORMATION THAT IS SAMSUNG ELECTRONICS CO'S PROPERTY. DO NOT DISCLOSE TO OR DUPLICATE FOR OTHERS EXCEPT AS AUTHORIZED BY SAMSUNG.

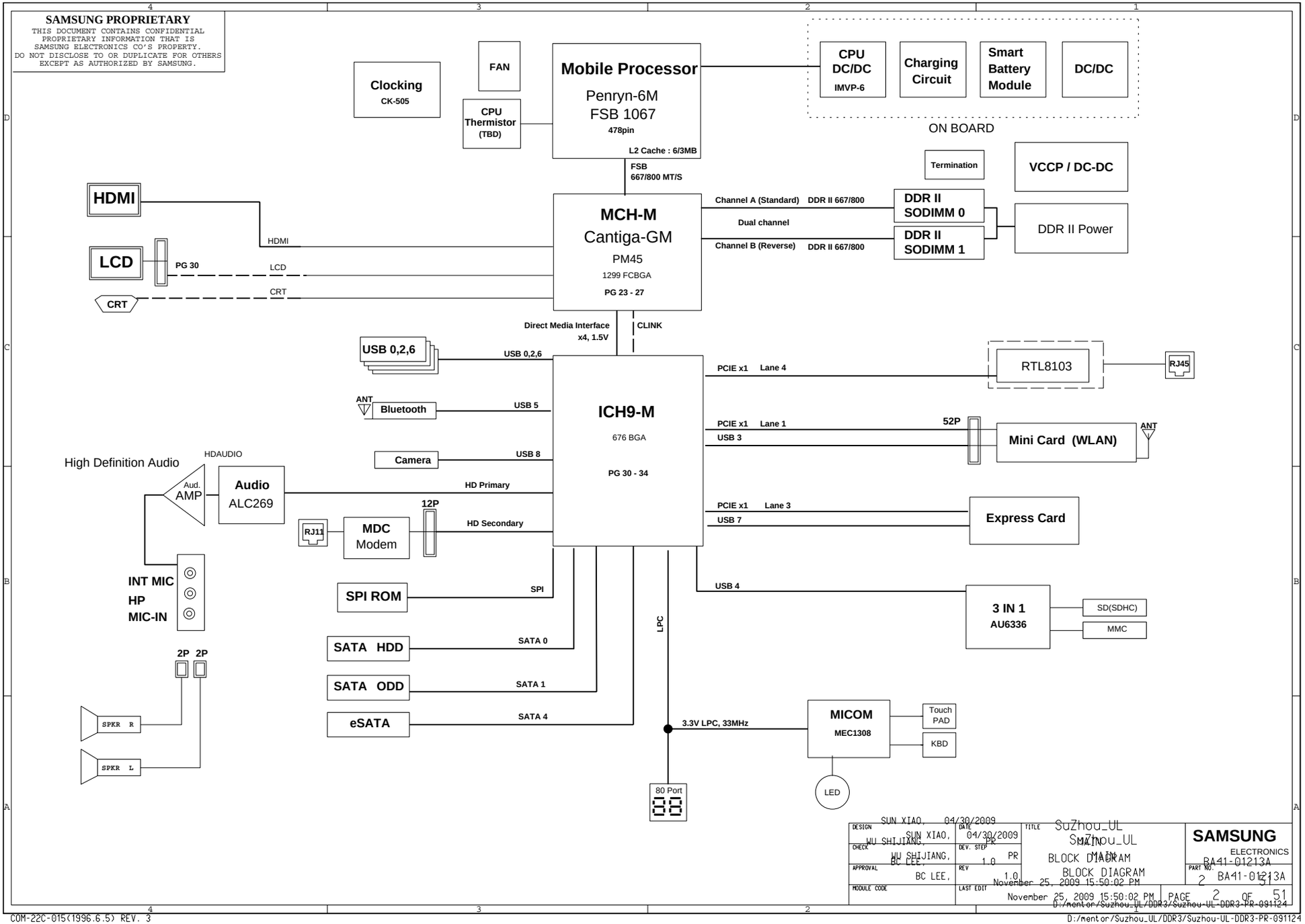

DESIGN SUN XIAO, 04/30/2009	DATE 04/30/2009	TITLE Suzhou_UL MAIN BLOCK DIAGRAM	SAMSUNG ELECTRONICS
CHECK WU SHIJIANG, BC LEE,	DEV. STEP PR 1.0		
APPROVAL BC LEE,	REV 1.0		PART NO. BA41-01213A
MODULE CODE	LAST EDIT November 25, 2009 15:50:02 PM	PAGE 2 OF 51	

SAMSUNG PROPRIETARY
THIS DOCUMENT CONTAINS CONFIDENTIAL PROPRIETARY INFORMATION THAT IS SAMSUNG ELECTRONICS CO'S PROPERTY. DO NOT DISCLOSE TO OR DUPLICATE FOR OTHERS EXCEPT AS AUTHORIZED BY SAMSUNG.

BOARD INFORMATION

SCHEMATIC ANNOTATIONS AND BOARD INFORMATION

PCI Devices

Devices	IDSEL#	REQ/GNT#	Interrupts
Cardbus	AD25	3	A,B,C
USB	AD29(internal)	-	USB2.0 #0 (USB0) : A USB2.0 #1 (USB1) : D USB2.0 #2 (USB4) : C USB2.0 #3 (USB5) : E USB2.0 #4 (EHCI) : H
Hub to PCI	AD30(internal)	-	-
LPC bridge/IDE/AC97/SMBUS	AD31(internal)	-	B
Internal MAC	AD24(internal)	-	E
AC Link	-	-	B
GLAN	-	-	F

Crystal / Oscillator

TYPE	FREQUENCY	DEVICE	USAGE
Crystal	32.768KHz	ICH9-M	Real Time Clock
Crystal	10MHz	MICOM	HD64F2169/2160
Crystal	14.318MHz	CLOCK-Generator	CK-505
Crystal	25MHz	LAN	RealTek 88E8057

LCD Pannel Detect (TBD)

Devices	Resolution	PANNEL_DETECT_0

Voltage Rails

VDC	Primary DC system power supply (9 to 20V)
VCC_CORE	Core Voltage for CPU
P1.05V (VCCP)	VTT for CPU, Crestline & ICH9-M
P3.3V_MICOM	3.3V always power rail (for Micom)
P1.5V	1.5V switched power rail (off in S3-S5)
P1.8V	1.8V switched power rail (off in S3-S5)
P1.8V_AUX	1.8V power rail for DDR (off in S4-S5)
P0.9V	0.9V power rail for DDR (off in S3-S5)
P3.3V	3.3V switched power rail (off in S3-S5)
P3.3V_AUX	3.3V switched on power rail (off in S4-S5)
P5.0V	5.0V switched power rail (off in S3-S5)
P5.0V_AUX	5.0V switched on power rail (off in S4-S5)
P5.0V_ALW	5.0V always power rail

I^2C / SMB Address

Devices	Address	Hex	Bus
ICH9-M	Master	-	SMBUS Master
CPU Thermal Sensor	0111 101x	7Ah	Thermal Sensor
SODIMM0	1010 000x	A0h	-
SODIMM1	1010 010x	A4h	-
Thermal Sensor on SODIMM0	0011 000x	30h	-
Thermal Sensor on SODIMM1	0011 010x	34h	-
CK-505M (Clock Generator)	1101 001x	D2h	Clock, Unused Clock Output Disable

USB PORT Assign

PORT #	ASSIGNED TO
0	SYSTEM PORT 0
1	SYSTEM PORT 1
2	SYSTEM PORT 2
3	NC
4	NC
5	Bluetooth
6	Mini PCI Express 2
7	Camera
8	NC
9	NC

PCI Express Assign

PORT #	ASSIGNED TO
0	NC
1	Mini Card 1 (WLAN)
2	NC
3	LOM
4	Mini Card 2 (ROBSON or DVB-T)
5	NC

(This table will be update.)

REVISION HISTORY

See rev notes for more information.

DESIGN: SUN XIAO,	DATE: 8/16/2009	TITLE: SuZhou_UL MAIN BCAFDINFO	SAMSUNG ELECTRONICS
CHECK: WU SHIJIANG,	DEV. STEP: PR		
APPROVAL: BC LEE,	REV: 1.0		PART NO. BA41-01213A
MODULE CODE	LAST EDIT: November 25, 2009 15:50:02 PM	PAGE 3 OF 51	

SAMSUNG PROPRIETARY
THIS DOCUMENT CONTAINS CONFIDENTIAL PROPRIETARY INFORMATION THAT IS SAMSUNG ELECTRONICS CO'S PROPERTY. DO NOT DISCLOSE TO OR DUPLICATE FOR OTHERS EXCEPT AS AUTHORIZED BY SAMSUNG.

POWER DIAGRAM

Rev 0.1

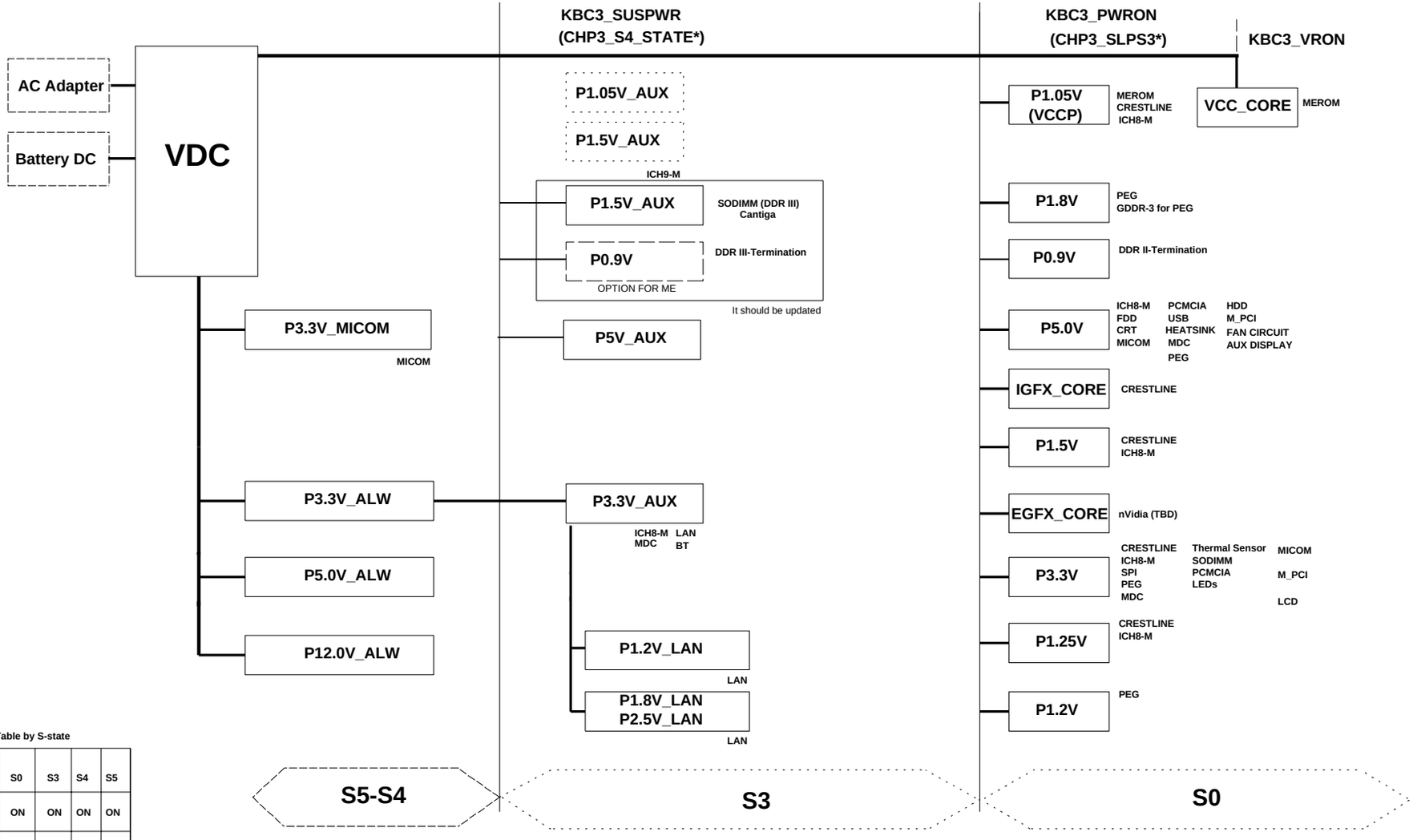

Power On/Off Table by S-state

Rail / State	S0	S3	S4	S5
+V*A(LWS) +V*LAN	ON	ON	ON	ON
+1.8V_AUX +0.9V	ON	ON	—	—
+V*AUX	ON	ON	—	—
+V	ON	—	—	—
+V* (CORE)	ON	—	—	—

DESIGN: SUN XIAO,	DATE: 8/16/2009	TITLE: SuZhou_UL MAIN POWER DIAGRAM	SAMSUNG ELECTRONICS
CHECK: WU SHIJIANG,	DEV. STEP: PR		
APPROVAL: BC LEE,	REV: 1.0		PART NO. BA41-01213A
MODULE CODE	LAST EDIT: November 25, 2009 15:50:02 PM		PAGE 4 OF 51

SAMSUNG PROPRIETARY
THIS DOCUMENT CONTAINS CONFIDENTIAL PROPRIETARY INFORMATION THAT IS SAMSUNG ELECTRONICS CO'S PROPERTY. DO NOT DISCLOSE TO OR DUPLICATE FOR OTHERS EXCEPT AS AUTHORIZED BY SAMSUNG.

POWER RAILS ANALYSIS

Rev. 0.6 (060920)

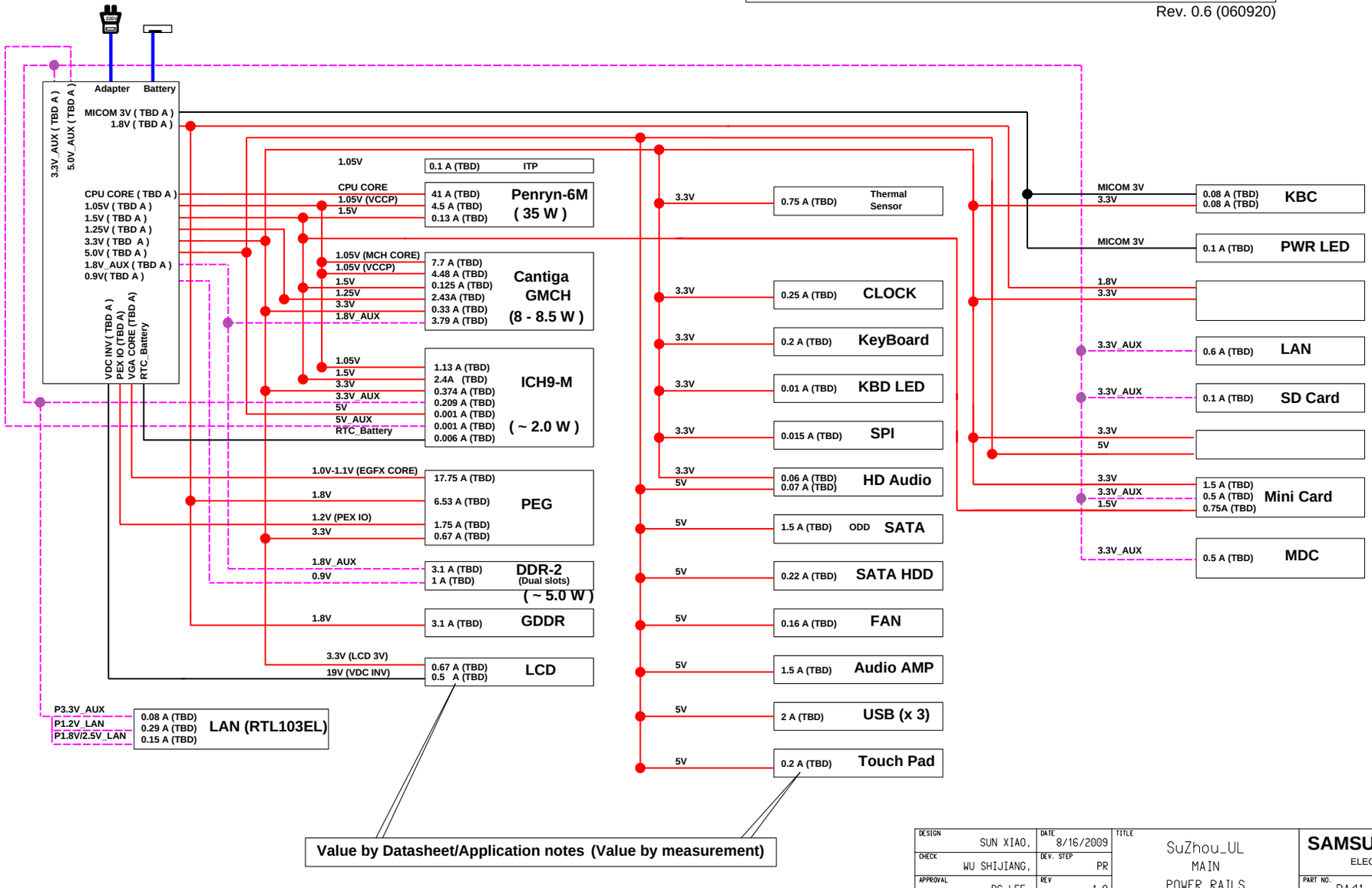

Value by Datasheet/Application notes (Value by measurement)

DESIGN: SUN XIAO,	DATE: 8/16/2009	TITLE: SuZhou_UL MAIN POWER RAILS	SAMSUNG ELECTRONICS
CHECK: WU SHIJIANG,	DEV. STEP: PR		
APPROVAL: BC LEE,	REV: 1.0		PART NO. BA41-01213A
MODULE CODE	LAST EDIT: November 25, 2009 15:50:02 PM		PAGE 5 OF 51

SAMSUNG PROPRIETARY
THIS DOCUMENT CONTAINS CONFIDENTIAL PROPRIETARY INFORMATION THAT IS SAMSUNG ELECTRONICS CO'S PROPERTY. DO NOT DISCLOSE TO OR DUPLICATE FOR OTHERS EXCEPT AS AUTHORIZED BY SAMSUNG.

POWER SEQUENCE

Rev. 0.7

Host Boot / ME Off
(SLPS4* = S4_STATE*) > (SLPM* = SLPS3*)
M-1) KBC3_DDR_PWRON (TBD) = 8) KBC3_SUSPWR
M-2) KBC3_ME_PWRON = 15) KBC3_PWRON

Host / ME Boot
(SLPS4* = S4_STATE*) > SLPM* > SLPS3*

Host S5 / ME Boot
(SLPS4* = SLPM*) > S4_STATE* > SLPS3*

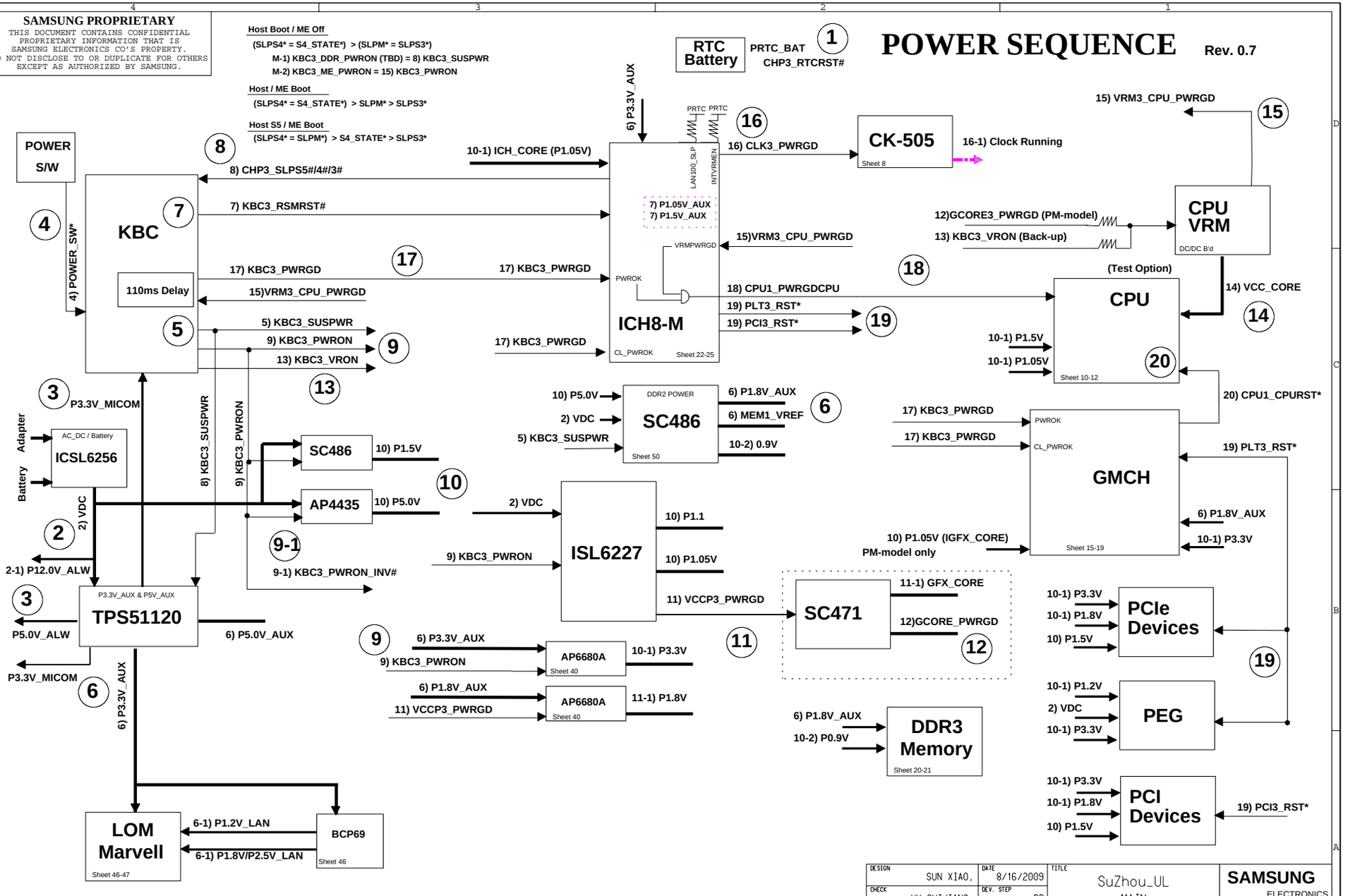

DESIGN: SUN XIAO,	DATE: 8/16/2009	TITLE: SuZhou_UL MAIN POWER SEQUENCE	SAMSUNG ELECTRONICS
CHECK: WU SHIJIANG,	DEV. STEP: PR		
APPROVAL: BC LEE,	REV: 1.0		PART NO. BA41-01213A
MODULE CODE	LAST EDIT: November 25, 2009 15:50:02 PM		PAGE 6 OF 51

SAMSUNG PROPRIETARY
THIS DOCUMENT CONTAINS CONFIDENTIAL PROPRIETARY INFORMATION THAT IS SAMSUNG ELECTRONICS CO'S PROPERTY. DO NOT DISCLOSE TO OR DUPLICATE FOR OTHERS EXCEPT AS AUTHORIZED BY SAMSUNG.

CLOCK DISTRIBUTION Rev. 0.1

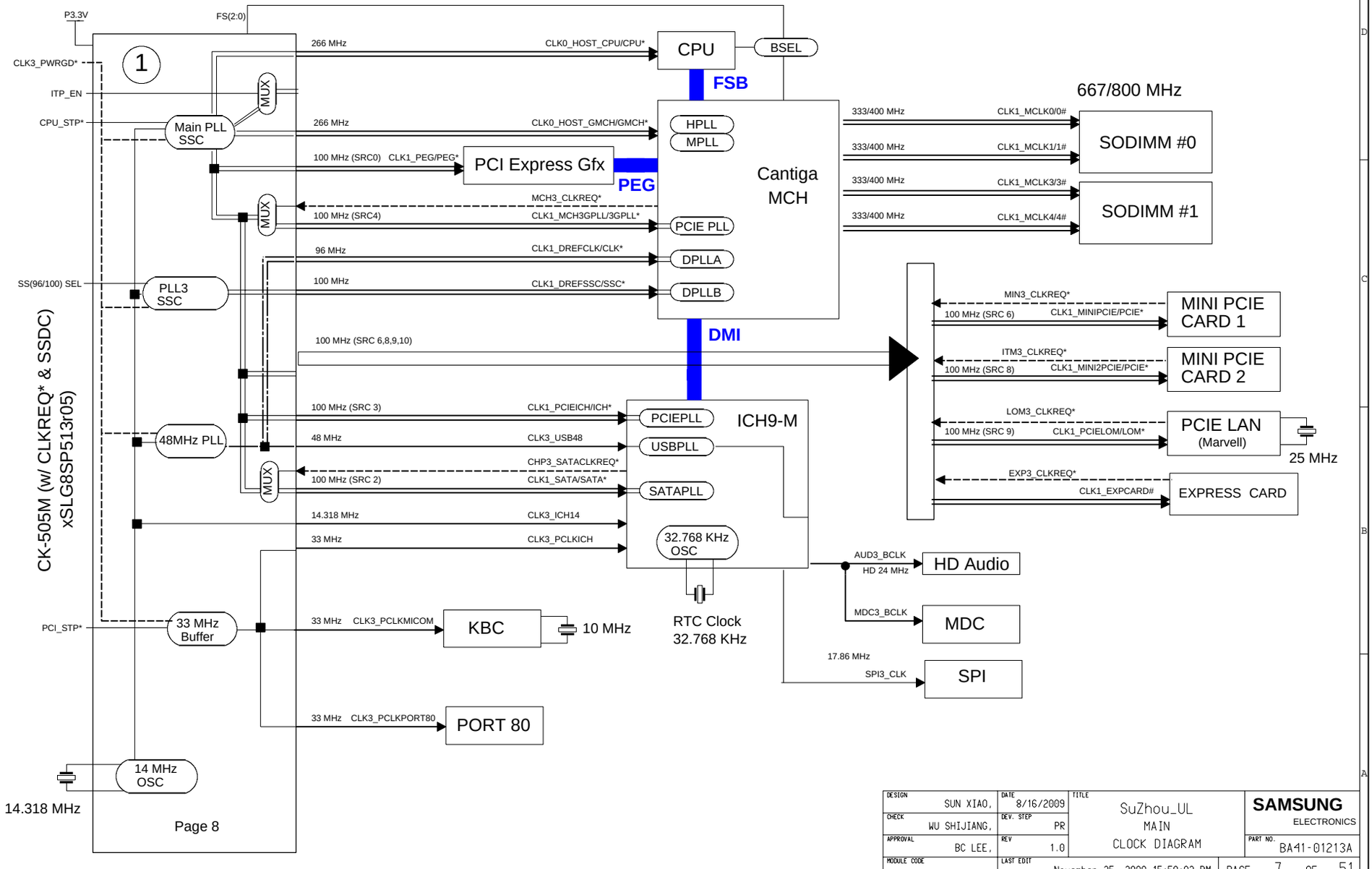

DESIGN: SUN XIAO,	DATE: 8/16/2009	TITLE: SuZhou_UL MAIN CLOCK DIAGRAM	SAMSUNG ELECTRONICS
CHECK: WU SHIJIANG,	DEV. STEP: PR		
APPROVAL: BC LEE,	REV: 1.0		PART NO. BA41-01213A
MODULE CODE	LAST EDIT: November 25, 2009 15:50:02 PM		PAGE 7 OF 51

SAMSUNG PROPRIETARY
THIS DOCUMENT CONTAINS CONFIDENTIAL PROPRIETARY INFORMATION THAT IS SAMSUNG ELECTRONICS CO'S PROPERTY. DO NOT DISCLOSE TO OR DUPLICATE FOR OTHERS EXCEPT AS AUTHORIZED BY SAMSUNG.

THERMAL SENSOR & FAN CONTROL

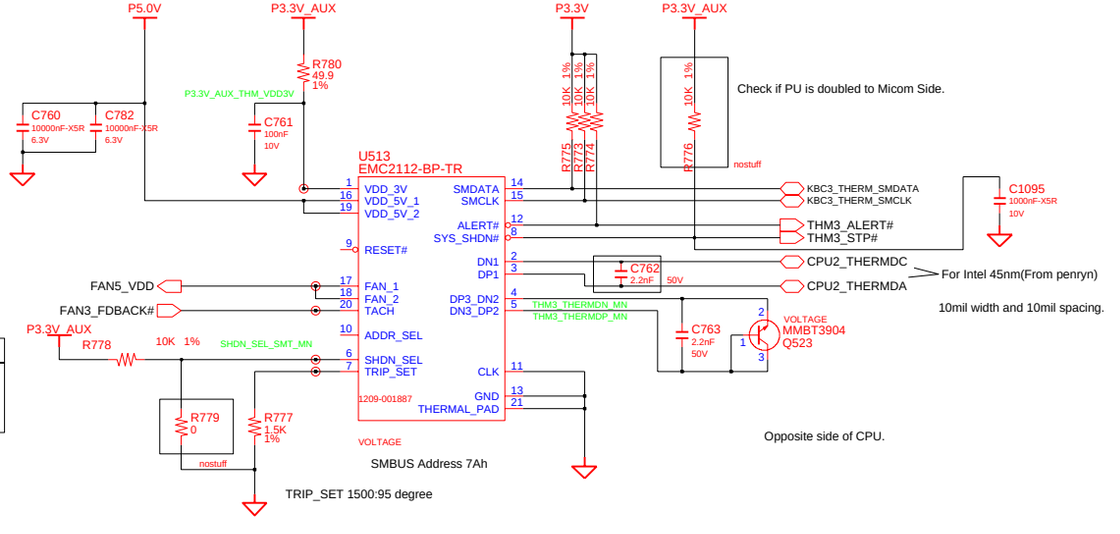

SHDN_SEL MODE	
0	CH1(INTEL MODE)
HIGH Z	CH3(DIODE MODE)
1	N/A (SHDN# NOT USED)

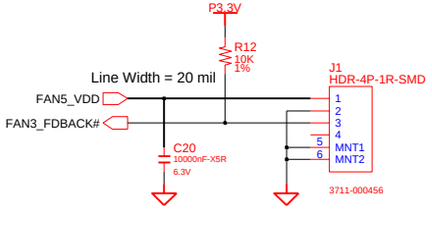

DESIGN: SUN XIAO,	DATE: 6/17/2008	TITLE: SuZhou_UL Thermal Sensor EMC2102	SAMSUNG ELECTRONICS
CHECK: WU SHIJIANG,	DEV. STEP: PR		
APPROVAL: BC LEE,	REV: 1.0		PART NO. BA41-01213A
MODULE CODE	LAST EDIT: November 25, 2009 15:50:02 PM	PAGE 8 OF 51	

SAMSUNG PROPRIETARY
THIS DOCUMENT CONTAINS CONFIDENTIAL PROPRIETARY INFORMATION THAT IS SAMSUNG ELECTRONICS CO'S PROPERTY. DO NOT DISCLOSE TO OR DUPLICATE FOR OTHERS EXCEPT AS AUTHORIZED BY SAMSUNG.

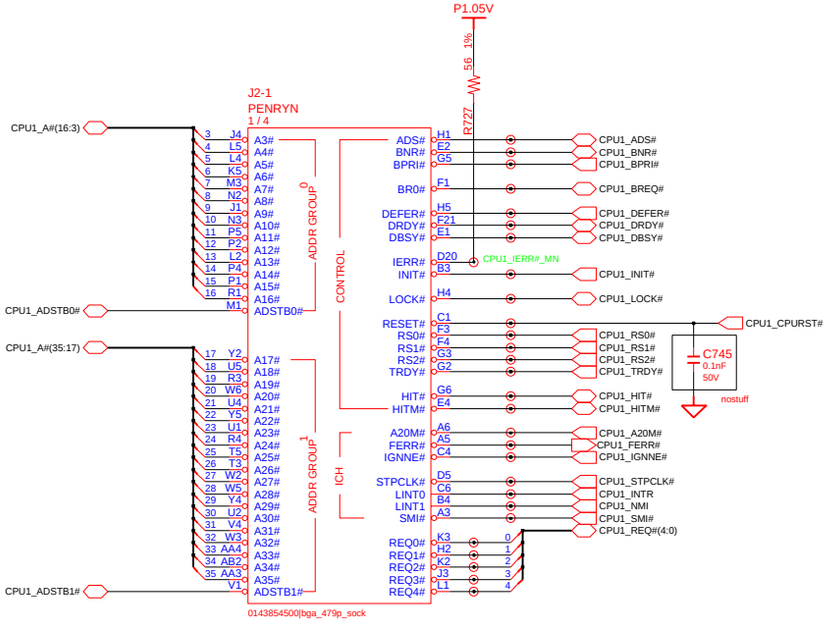

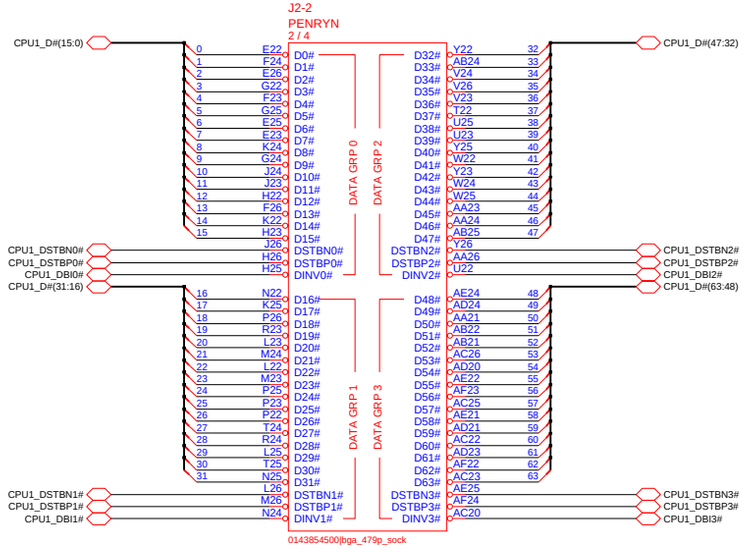

CPU Socket: 3704-001153

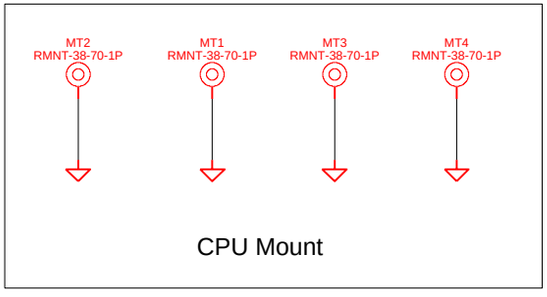

CPU Mount

DRAW: SUN XIAO,	DATE: 11/8/2006	TITLE: SuZhou_UL CPU PENRYN (1/3)	SAMSUNG ELECTRONICS
CHECK: WU SHIJIANG,	DEV. STEP: PR		
APPROVAL: BC LEE,	REV: 1.0		PART NO. BA41-01213A
MODULE CODE: undefined	LAST EDIT: November 25, 2009 15:50:02 PM		PAGE 9 OF 51

SAMSUNG PROPRIETARY
THIS DOCUMENT CONTAINS CONFIDENTIAL PROPRIETARY INFORMATION THAT IS SAMSUNG ELECTRONICS CO'S PROPERTY. DO NOT DISCLOSE TO OR DUPLICATE FOR OTHERS EXCEPT AS AUTHORIZED BY SAMSUNG.

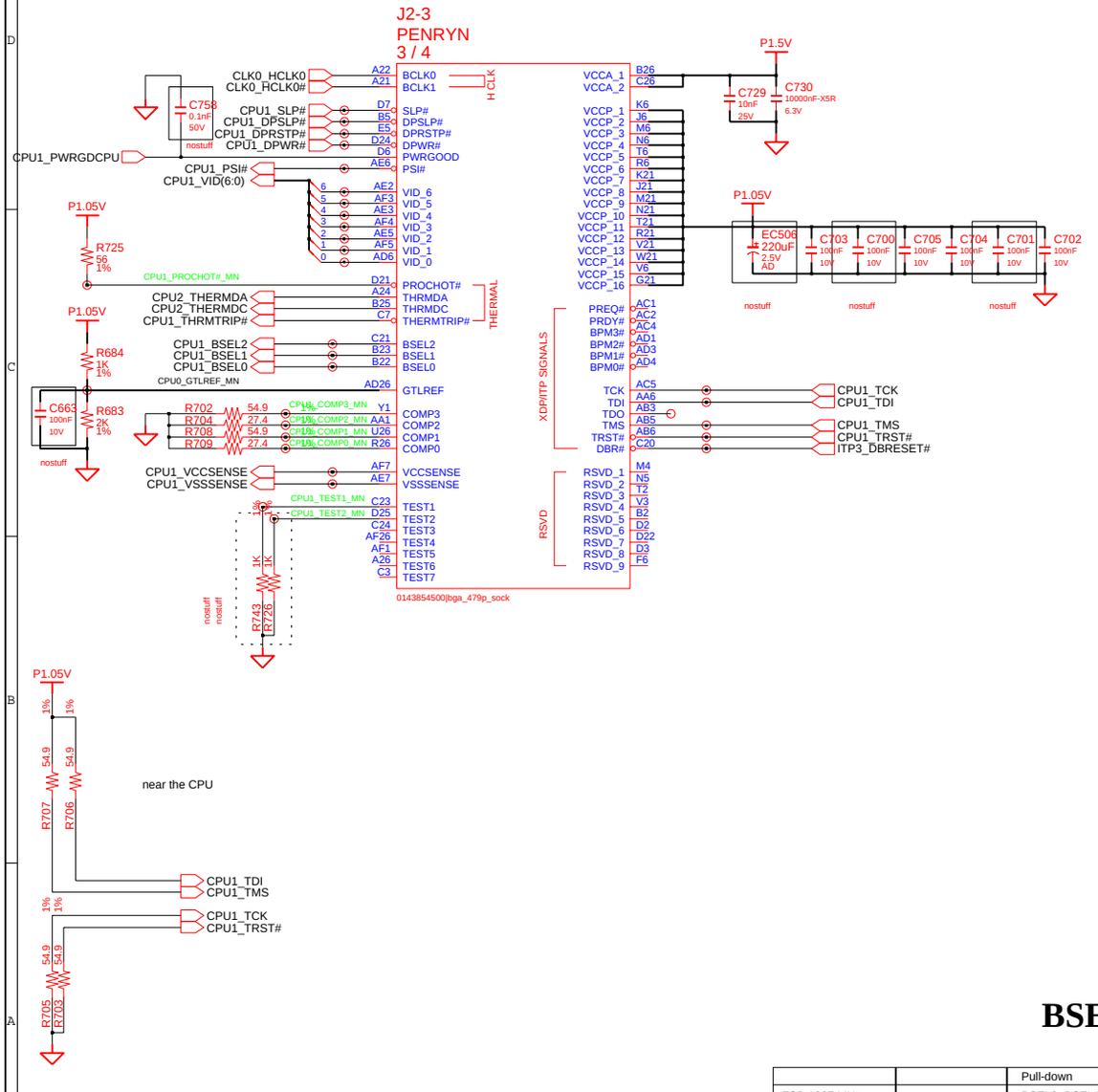

CPU Core Voltage Table

IMVP-6

Active Mode VID(6:0)	Voltage	Active/Deeper Sleep Dual Mode Region VID(6:0)	Voltage	Deeper Sleep/Extended Deeper Sleep Dual Mode Region VID(6:0)	Voltage
0 0 0 0 0 0 0	1.5000 V	0 1 0 1 0 0 0	1.0000 V	1 0 1 0 0 0 1	0.4875 V
0 0 0 0 0 0 1	1.4875 V	0 1 0 1 0 0 1	0.9875 V	1 0 1 0 0 1 0	0.4750 V
0 0 0 0 0 1 0	1.4750 V	0 1 0 1 0 1 0	0.9750 V	1 0 1 0 0 1 1	0.4625 V
0 0 0 0 0 1 1	1.4625 V	0 1 0 1 0 1 1	0.9625 V	1 0 1 0 1 0 0	0.4500 V
0 0 0 0 1 0 0	1.4500 V	0 1 0 1 1 0 0	0.9500 V	1 0 1 0 1 0 1	0.4375 V
0 0 0 0 1 0 1	1.4375 V	0 1 0 1 1 0 1	0.9375 V	1 0 1 0 1 1 0	0.4250 V
0 0 0 0 1 1 0	1.4250 V	0 1 0 1 1 1 0	0.9250 V	1 0 1 0 1 1 1	0.4125 V
0 0 0 0 1 1 1	1.4125 V	0 1 0 1 1 1 1	0.9125 V	1 0 1 1 0 0 0	0.4000 V
0 0 0 1 0 0 0	1.4000 V	0 1 1 0 0 0 0	0.9000 V	1 0 1 1 0 0 1	0.3875 V
0 0 0 1 0 0 1	1.3875 V	0 1 1 0 0 0 1	0.8875 V	1 0 1 1 0 1 0	0.3750 V
0 0 0 1 0 1 0	1.3750 V	0 1 1 0 0 1 0	0.8750 V	1 0 1 1 0 1 1	0.3625 V
0 0 0 1 0 1 1	1.3625 V	0 1 1 0 0 1 1	0.8625 V	1 0 1 1 1 0 0	0.3500 V
0 0 0 1 1 0 0	1.3500 V	0 1 1 0 1 0 0	0.8500 V	1 0 1 1 1 0 1	0.3375 V
0 0 0 1 1 0 1	1.3375 V	0 1 1 0 1 0 1	0.8375 V	1 0 1 1 1 1 0	0.3250 V
0 0 0 1 1 1 0	1.3250 V	0 1 1 0 1 1 0	0.8250 V	1 0 1 1 1 1 1	0.3125 V
0 0 0 1 1 1 1	1.3125 V	0 1 1 0 1 1 1	0.8125 V	1 1 0 0 0 0 0	0.3000 V
0 0 1 0 0 0 0	1.3000 V	0 1 1 1 0 0 0	0.8000 V	1 1 0 0 0 0 1	0.2875 V
0 0 1 0 0 0 1	1.2875 V	0 1 1 1 0 0 1	0.7875 V	1 1 0 0 0 1 0	0.2750 V
0 0 1 0 0 1 0	1.2750 V	0 1 1 1 0 1 0	0.7750 V	1 1 0 0 0 1 1	0.2625 V
0 0 1 0 0 1 1	1.2625 V	0 1 1 1 0 1 1	0.7625 V	1 1 0 0 1 0 0	0.2500 V
0 0 1 0 1 0 0	1.2500 V	0 1 1 1 1 0 0	0.7500 V	1 1 0 0 1 0 1	0.2375 V
0 0 1 0 1 0 1	1.2375 V	0 1 1 1 1 0 1	0.7375 V	1 1 0 0 1 1 0	0.2250 V
0 0 1 0 1 1 0	1.2250 V	0 1 1 1 1 1 0	0.7250 V	1 1 0 0 1 1 1	0.2125 V
0 0 1 0 1 1 1	1.2125 V	0 1 1 1 1 1 1	0.7125 V	1 1 0 1 0 0 0	0.2000 V
0 0 1 1 0 0 0	1.2000 V	1 0 0 0 0 0 0	0.7000 V	1 1 0 1 0 0 1	0.1875 V
0 0 1 1 0 0 1	1.1875 V	1 0 0 0 0 0 1	0.6875 V	1 1 0 1 0 1 0	0.1750 V
0 0 1 1 0 1 0	1.1750 V	1 0 0 0 0 1 0	0.6750 V	1 1 0 1 0 1 1	0.1625 V
0 0 1 1 0 1 1	1.1625 V	1 0 0 0 0 1 1	0.6625 V	1 1 0 1 1 0 0	0.1500 V
0 0 1 1 1 0 0	1.1500 V	1 0 0 0 1 0 0	0.6500 V	1 1 0 1 1 0 1	0.1375 V
0 0 1 1 1 0 1	1.1375 V	1 0 0 0 1 0 1	0.6375 V	1 1 0 1 1 1 0	0.1250 V
0 0 1 1 1 1 0	1.1250 V	1 0 0 0 1 1 0	0.6250 V	1 1 0 1 1 1 1	0.1125 V
0 0 1 1 1 1 1	1.1125 V	1 0 0 0 1 1 1	0.6125 V	1 1 1 0 0 0 0	0.1000 V
0 1 0 0 0 0 0	1.1000 V	1 0 0 1 0 0 0	0.6000 V	1 1 1 0 0 0 1	0.0875 V
0 1 0 0 0 0 1	1.0875 V	1 0 0 1 0 0 1	0.5875 V	1 1 1 0 0 1 0	0.0750 V
0 1 0 0 0 1 0	1.0750 V	1 0 0 1 0 1 0	0.5750 V	1 1 1 0 0 1 1	0.0625 V
0 1 0 0 0 1 1	1.0625 V	1 0 0 1 0 1 1	0.5625 V	1 1 1 0 1 0 0	0.0500 V
0 1 0 0 1 0 0	1.0500 V	1 0 0 1 1 0 0	0.5500 V	1 1 1 0 1 0 1	0.0375 V
0 1 0 0 1 0 1	1.0375 V	1 0 0 1 1 0 1	0.5375 V	1 1 1 0 1 1 0	0.0250 V
0 1 0 0 1 1 0	1.0250 V	1 0 0 1 1 1 0	0.5250 V	1 1 1 0 1 1 1	0.0125 V
0 1 0 0 1 1 1	1.0125 V	1 0 0 1 1 1 1	0.5125 V	1 1 1 1 0 0 0	0.0000 V
		1 0 1 0 0 0 0	0.5000 V	1 1 1 1 0 0 1	0.0000 V
				1 1 1 1 0 1 0	0.0000 V
				1 1 1 1 0 1 1	0.0000 V
				1 1 1 1 1 0 0	0.0000 V
				1 1 1 1 1 0 1	0.0000 V
				1 1 1 1 1 1 0	0.0000 V
				1 1 1 1 1 1 1	0.0000 V

*"1111111" : 0V power good asserted.

Active	
DPRSLPVR	0
DPRSTP*	1
PSI2*	0 or 1

Deeper Slp	
DPRSLPVR	1
DPRSTP*	0
PSI2*	0 or 1

*Yonah Processor (2.33 GHz / 800 MHz : TBD)

GTLREF : Keep the Voltage divider within 0.5" of the first GTLREF0 pin with Zo=55ohm trace. Minimize coupling of any switching signals to this net.

COMP0,2(COMP1,3) should be connected with Zo=27.4ohm(55ohm) trace shorter than 1/2" to their respective Banias socket pins.

GND test points within 100mil of the VCC/VSSsense at the end of the line. Route the VCC/VSSsense as a Zo=55ohm traces with equal length. Observe 3:1 spacing b/w VCC/VSSsense lines and 25mil away (preferred 50mil) from any other signal. And GND via 100mil away from each of the VCC/VSS test point vias.

BSEL

		Pull-down
FSB 1067 MHz FSB 800 MHz		BSEL0, BSEL1, BSEL2 BSEL0, BSEL2

DRAW: SUN XIAO,	DATE: 11/8/2006	TITLE: SuZhou_UL CPU PENRYN (2/3)	SAMSUNG ELECTRONICS
CHECK: WU SHIJIANG,	DEV. STEP: PR		
APPROVAL: BC LEE,	REV: 1.0		PART NO. BA41-01213A
MODULE CODE: undefined	LAST EDIT: November 25, 2009 15:50:02 PM		PAGE 10 OF 51

SAMSUNG PROPRIETARY
THIS DOCUMENT CONTAINS CONFIDENTIAL
PROPRIETARY INFORMATION THAT IS
SAMSUNG ELECTRONICS CO'S PROPERTY.
DO NOT DISCLOSE TO OR DUPLICATE FOR OTHERS
EXCEPT AS AUTHORIZED BY SAMSUNG.

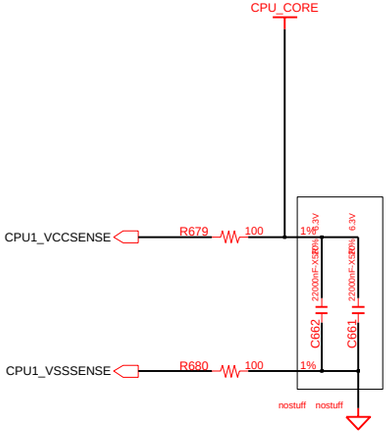

6x 330 uF : CPU VR side

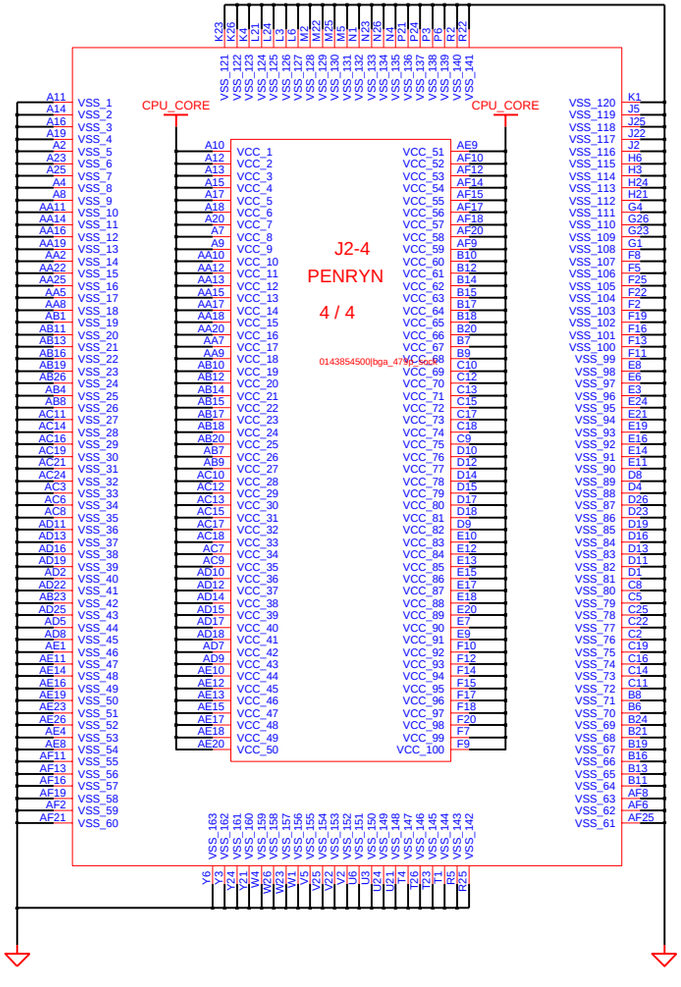

DRAW: SUN XIAO,	DATE: 11/8/2006	TITLE: SuZhou_UL CPU PENRYN (3/3)	SAMSUNG ELECTRONICS
CHECK: WU SHIJIANG,	DEV. STEP: PR		
APPROVAL: BC LEE,	REV: 1.0		PART NO. BA41-01213A
MODULE CODE: undefined	LAST EDIT: November 25, 2009 15:50:02 PM		PAGE 11 OF 51

SAMSUNG PROPRIETARY
THIS DOCUMENT CONTAINS CONFIDENTIAL PROPRIETARY INFORMATION THAT IS SAMSUNG ELECTRONICS CO'S PROPERTY. DO NOT DISCLOSE TO OR DUPLICATE FOR OTHERS EXCEPT AS AUTHORIZED BY SAMSUNG.

CK505M

FSA BSEL0	FSB BSEL1	FSC BSEL2	HOST CLK
0	0	0	266 MHz
0	0	1	333 MHz
0	1	0	200 MHz
0	1	1	400 MHz
1	0	0	133 MHz
1	0	1	100 MHz
1	1	0	166 MHz
1	1	1	RSVD

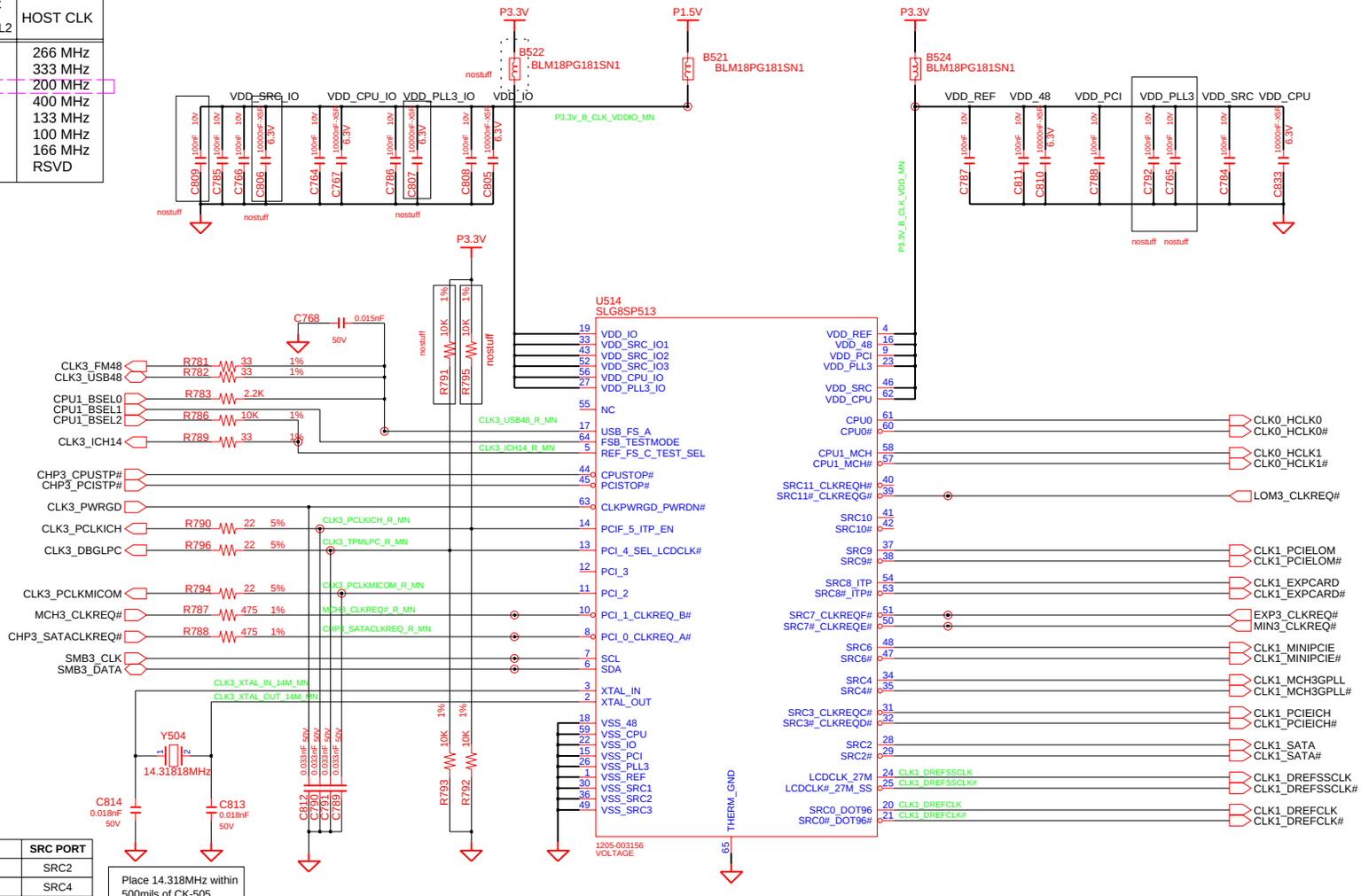

Place 14.318MHz within 500mils of CK-505

CLK REQ	DEVICE	SRC PORT
CLK REQ A	SATA	SRC2
CLK REQ B	GMCH	SRC4
CLK REQ E	MINI CARD	SRC6
CLK REQ F	EXP3_CLKREQ#	SRC8

SEL_LCDCLK*	Pin 20/21	Pin 24/25
LOW	DOT_96/DOT_96#	PEG_CLK/PEG_CLK#
HIGH	SRC_0/SRC_0#	27M & 27M_SS

This part is 64pin QFN package.

IDT: 1205-003159
SL: 1205-003533

DRAW: SUN XIAO,	DATE: 8/12/2006	TITLE: SuZhou_UL Main_Clock_Circuit CK_Clock_505M	SAMSUNG ELECTRONICS
CHECK: WU SHIJIANG,	DEV. STEP: PR		
APPROVAL: BC LEE,	REV: 1.0		PART NO. BA41-01213A
MODULE CODE: undefined	LAST EDIT: November 25, 2009 15:50:02 PM		PAGE 12 OF 51

SAMSUNG PROPRIETARY
THIS DOCUMENT CONTAINS CONFIDENTIAL PROPRIETARY INFORMATION THAT IS SAMSUNG ELECTRONICS CO'S PROPERTY. DO NOT DISCLOSE TO OR DUPLICATE FOR OTHERS EXCEPT AS AUTHORIZED BY SAMSUNG.

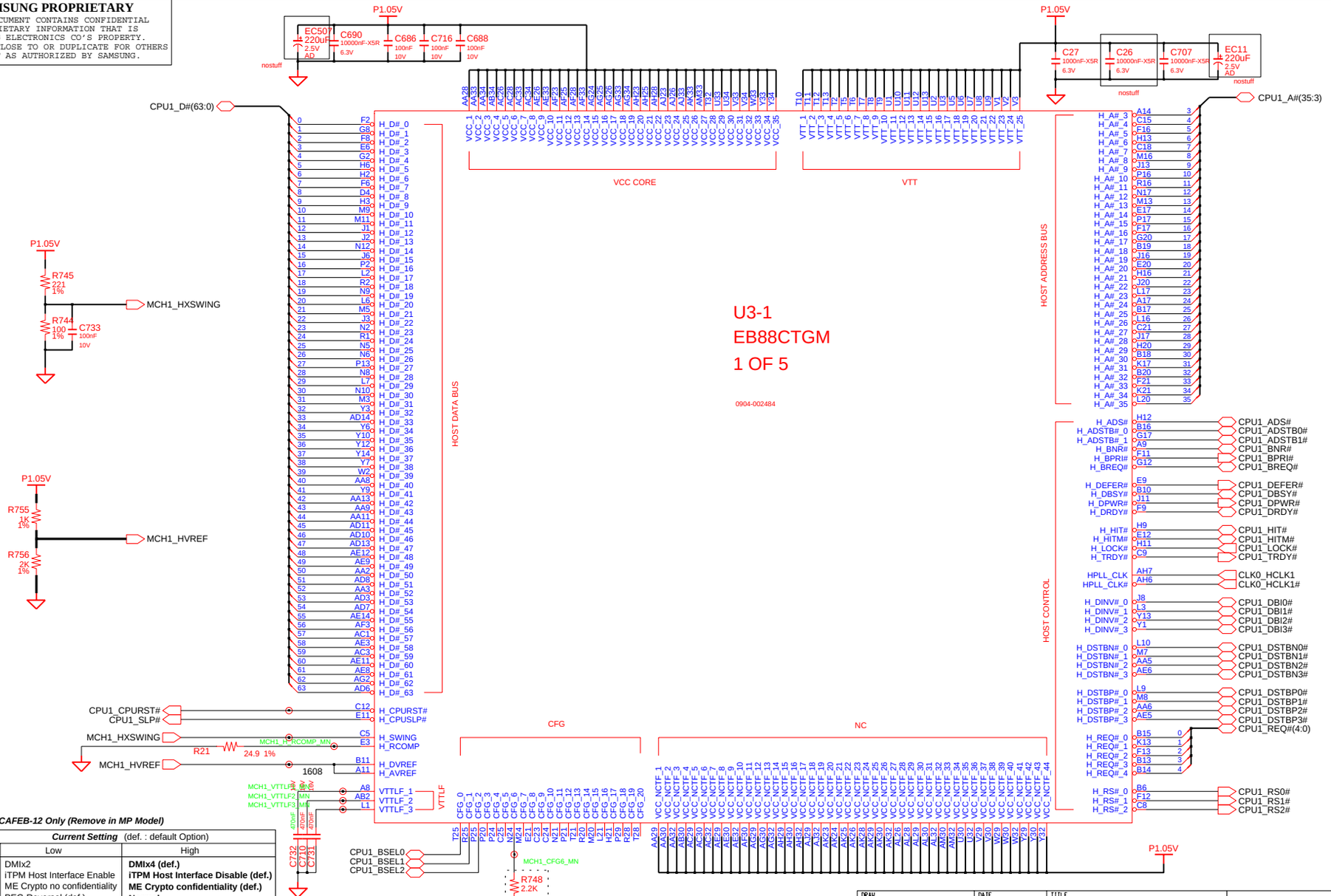

POCAFEB-12 Only (Remove in MP Model)

Current Setting (def. : default Option)		
CFG#	Low	High
CFG(5)	DMIx2	**DMIx4 (def.)**
CFG(6)	iTPM Host Interface Enable	**iTPM Host Interface Disable (def.)**
CFG(7)	ME Crypto no confidentiality	**ME Crypto confidentiality (def.)**
CFG(9)	PEG Reversal (def.)	**Normal**
CFG(10)	PCIE Loop Back Enable	**PCIE Loop Back Disable(def)**
CFG(16)	Dynamic ODT Disabled	**Dynamic ODT Enabled (def.)**
CFG(19)	**DMI Lane Normal (def.)**	DMI Lane Reversal
CFG(20)	**SDVO or PCIE X1 Only(def.)**	SDVO and PCIE X1 Simultaneously

DRAW: SUN XIAO,	DATE: 11/8/2006	TITLE: SuZhou_UL MCH_CANTIGA_PM_DDR3 CANTIGA (1/5)	**SAMSUNG** ELECTRONICS
CHECK: WU SHIJIANG,	DEV. STEP: PR		
APPROVAL: BC LEE,	REV: 1.0		PART NO. BA41-01213A
MODULE CODE: undefined	LAST EDIT: November 25, 2009 15:50:02 PM		PAGE 13 OF 51

SAMSUNG PROPRIETARY
THIS DOCUMENT CONTAINS CONFIDENTIAL PROPRIETARY INFORMATION THAT IS SAMSUNG ELECTRONICS CO'S PROPERTY. DO NOT DISCLOSE TO OR DUPLICATE FOR OTHERS EXCEPT AS AUTHORIZED BY SAMSUNG.

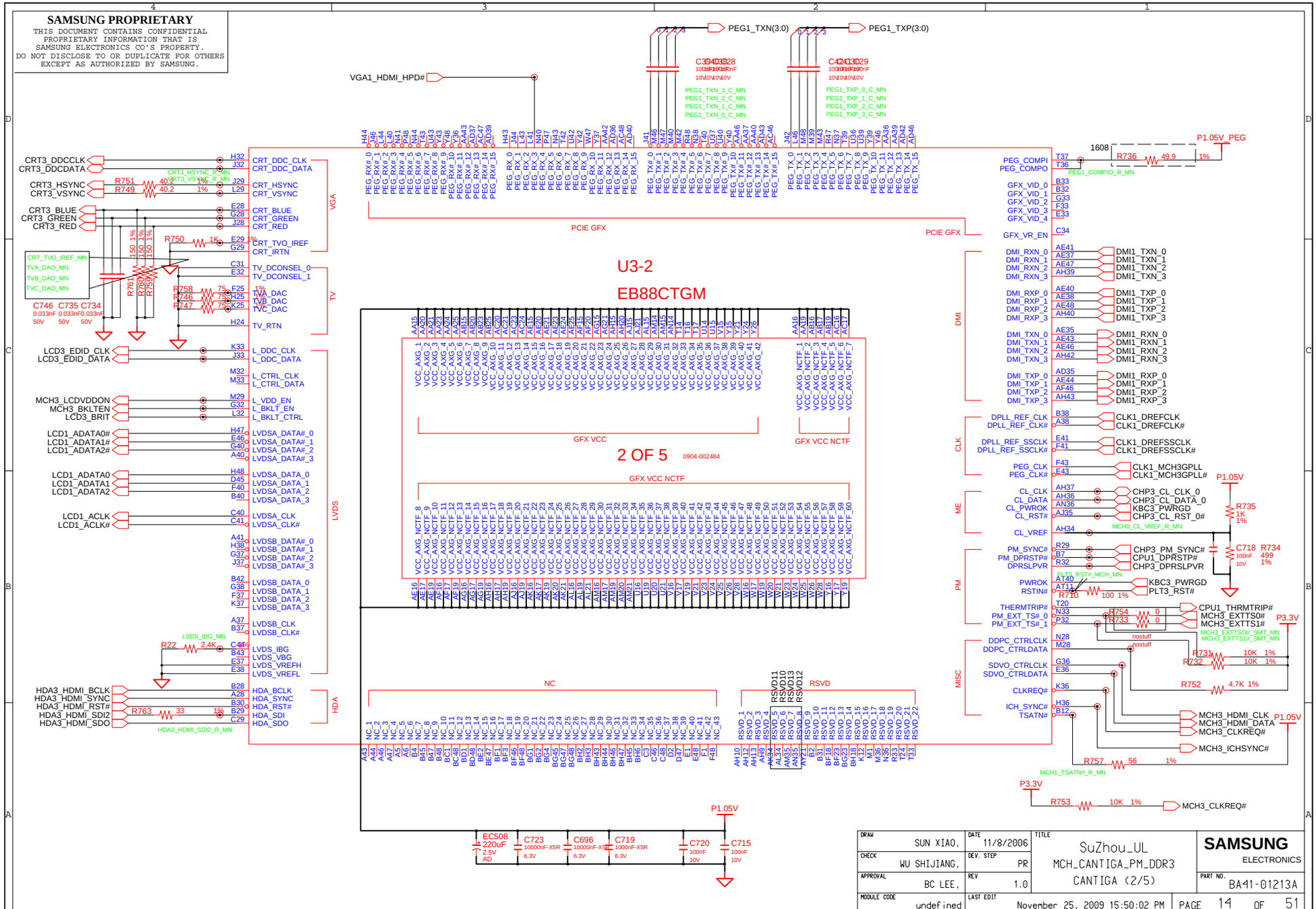

DRAW: SUN XIAO,	DATE: 11/8/2006	TITLE: SuZhou_UL MCH_CANTIGA_PM_DDR3 CANTIGA (2/5)	SAMSUNG ELECTRONICS
CHECK: WU SHIJIANG,	DEV. STEP: PR		
APPROVAL: BC LEE,	REV: 1.0		PART NO. BA41-01213A
MODULE CODE: undefined	LAST EDIT: November 25, 2009 15:50:02 PM		PAGE 14 OF 51

SAMSUNG PROPRIETARY
THIS DOCUMENT CONTAINS CONFIDENTIAL PROPRIETARY INFORMATION THAT IS SAMSUNG ELECTRONICS CO'S PROPERTY. DO NOT DISCLOSE TO OR DUPLICATE FOR OTHERS EXCEPT AS AUTHORIZED BY SAMSUNG.

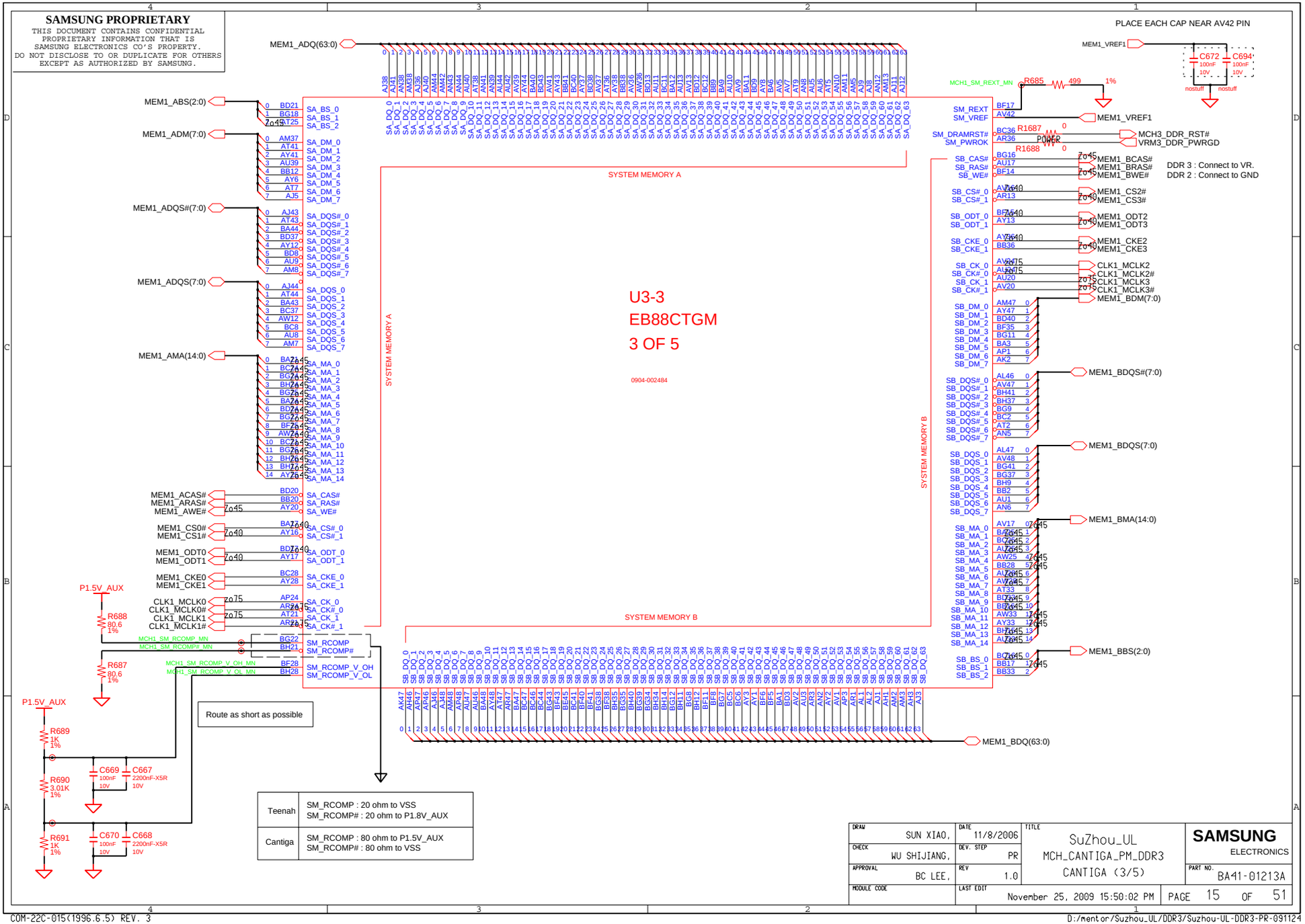

Teenah	SM_RCOMP : 20 ohm to VSS SM_RCOMP# : 20 ohm to P1.8V_AUX
Cantiga	SM_RCOMP : 80 ohm to P1.5V_AUX SM_RCOMP# : 80 ohm to VSS

DRAW SUN XIAO,	DATE 11/8/2006	TITLE SuZhou_UL MCH_CANTIGA_PM_DDR3 CANTIGA (3/5)	SAMSUNG ELECTRONICS
CHECK WU SHIJIANG,	DEV. STEP PR		PART NO. BA41-01213A
APPROVAL BC LEE,	REV 1.0		
MODULE CODE	LAST EDIT November 25, 2009 15:50:02 PM		PAGE 15 OF 51

SAMSUNG PROPRIETARY
THIS DOCUMENT CONTAINS CONFIDENTIAL PROPRIETARY INFORMATION THAT IS SAMSUNG ELECTRONICS CO'S PROPERTY. DO NOT DISCLOSE TO OR DUPLICATE FOR OTHERS EXCEPT AS AUTHORIZED BY SAMSUNG.

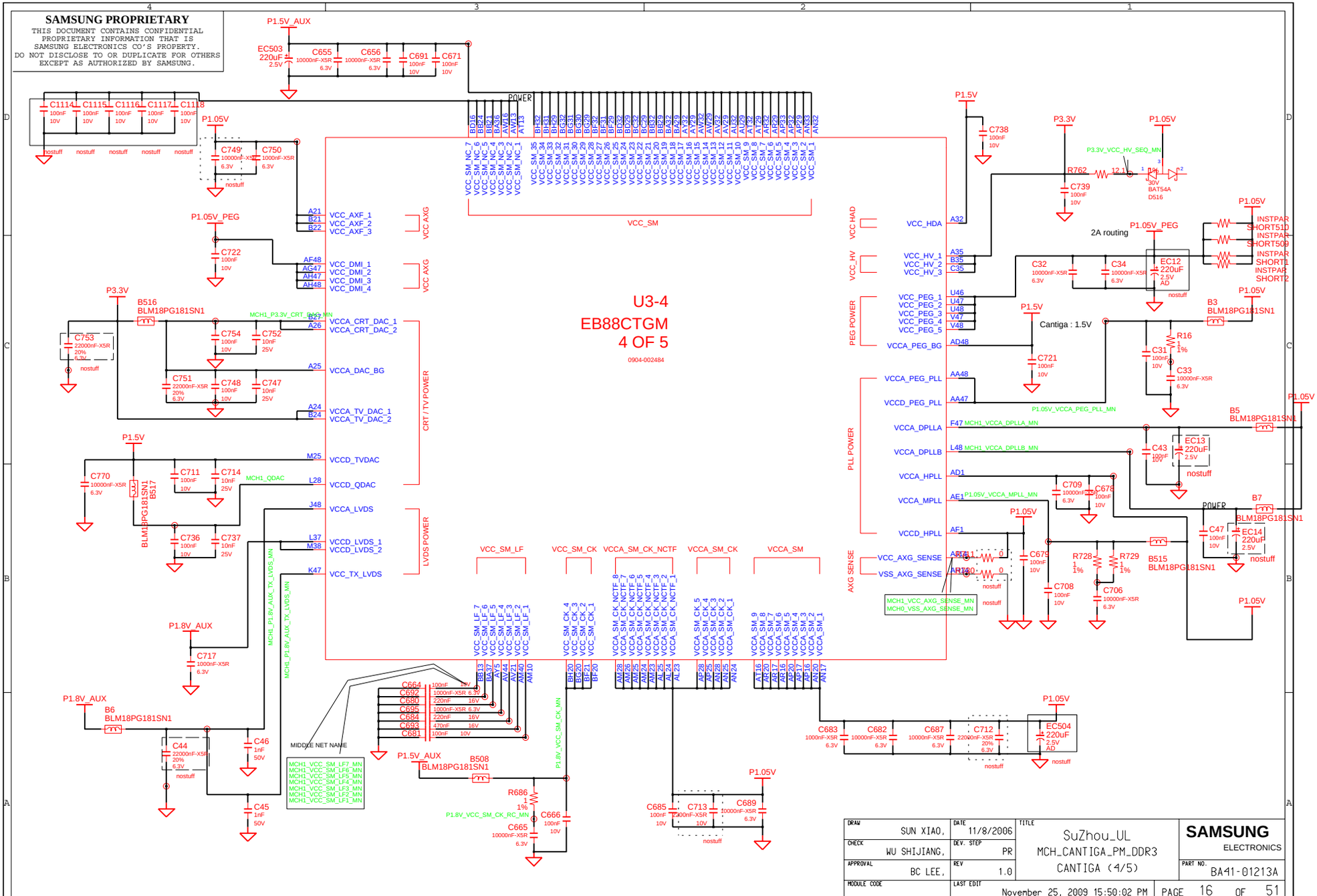

DRAW: SUN XIAO,	DATE: 11/8/2006	TITLE: SuZhou_UL MCH_CANTIGA_PM_DDR3 CANTIGA (4/5)	SAMSUNG ELECTRONICS
CHECK: WU SHIJIANG,	DEV. STEP: PR		
APPROVAL: BC LEE,	REV: 1.0		PART NO. BA41-01213A
MODULE CODE	LAST EDIT: November 25, 2009 15:50:02 PM		PAGE 16 OF 51

SAMSUNG PROPRIETARY
THIS DOCUMENT CONTAINS CONFIDENTIAL PROPRIETARY INFORMATION THAT IS SAMSUNG ELECTRONICS CO'S PROPERTY. DO NOT DISCLOSE TO OR DUPLICATE FOR OTHERS EXCEPT AS AUTHORIZED BY SAMSUNG.

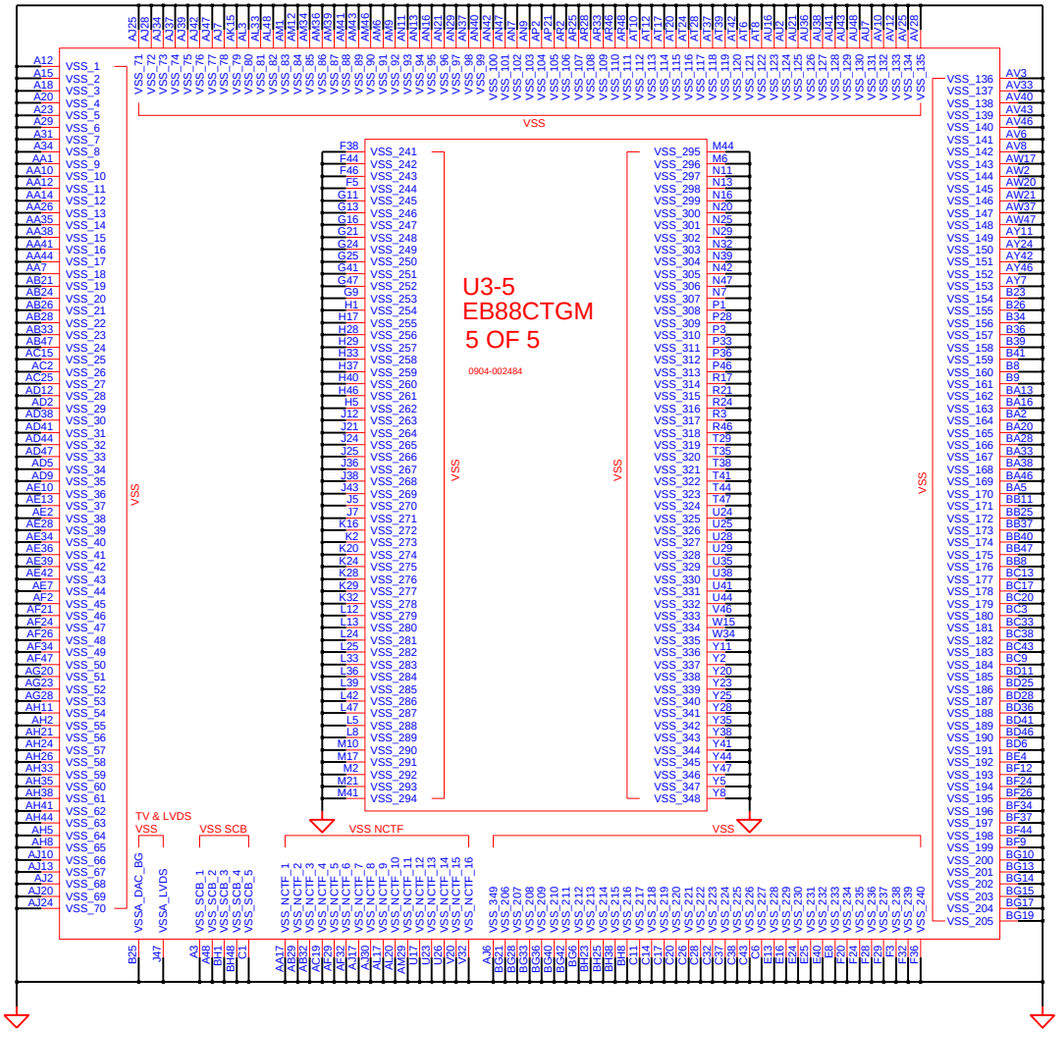

DRAW SUN XIAO,	DATE 11/8/2006	TITLE SuZhou_UL MCH_CANTIGA_PM_DDR3 CANTIGA (5/5)	SAMSUNG ELECTRONICS
CHECK WU SHIJIANG,	DEV. STEP PR		
APPROVAL BC LEE,	REV 1.0		PART NO. BA41-01213A
MODULE CODE	LAST EDIT November 25, 2009 15:50:02 PM		PAGE 17 OF 51

SAMSUNG PROPRIETARY
THIS DOCUMENT CONTAINS CONFIDENTIAL PROPRIETARY INFORMATION THAT IS SAMSUNG ELECTRONICS CO'S PROPERTY. DO NOT DISCLOSE TO OR DUPLICATE FOR OTHERS EXCEPT AS AUTHORIZED BY SAMSUNG.

DDR SO-DIMM #0

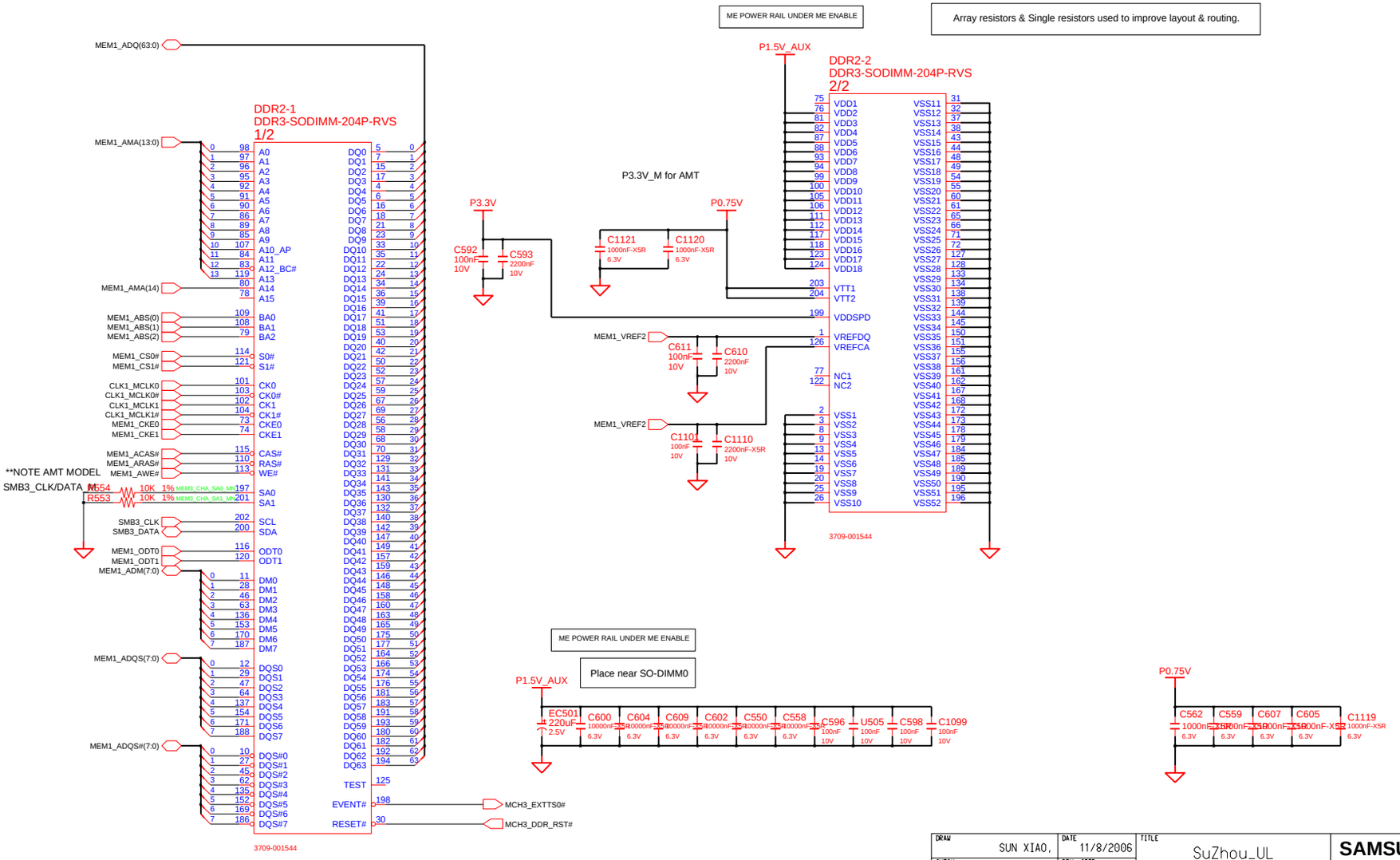

DRAW: SUN XIAO,	DATE: 11/8/2006	TITLE: SuZhou_UL SODIMM_REV DDR3 CH A	SAMSUNG ELECTRONICS
CHECK: WU SHIJIANG,	DEV. STEP: PR		
APPROVAL: BC LEE,	REV: 1.0		PART NO. BA41-01213A
MODULE CODE	LAST EDIT: November 25, 2009 15:50:02 PM		PAGE 18 OF 51

SAMSUNG PROPRIETARY
THIS DOCUMENT CONTAINS CONFIDENTIAL PROPRIETARY INFORMATION THAT IS SAMSUNG ELECTRONICS CO'S PROPERTY. DO NOT DISCLOSE TO OR DUPLICATE FOR OTHERS EXCEPT AS AUTHORIZED BY SAMSUNG.

DDR SO-DIMM #1

Array resistors & Single resistors used to improve layout & routing.

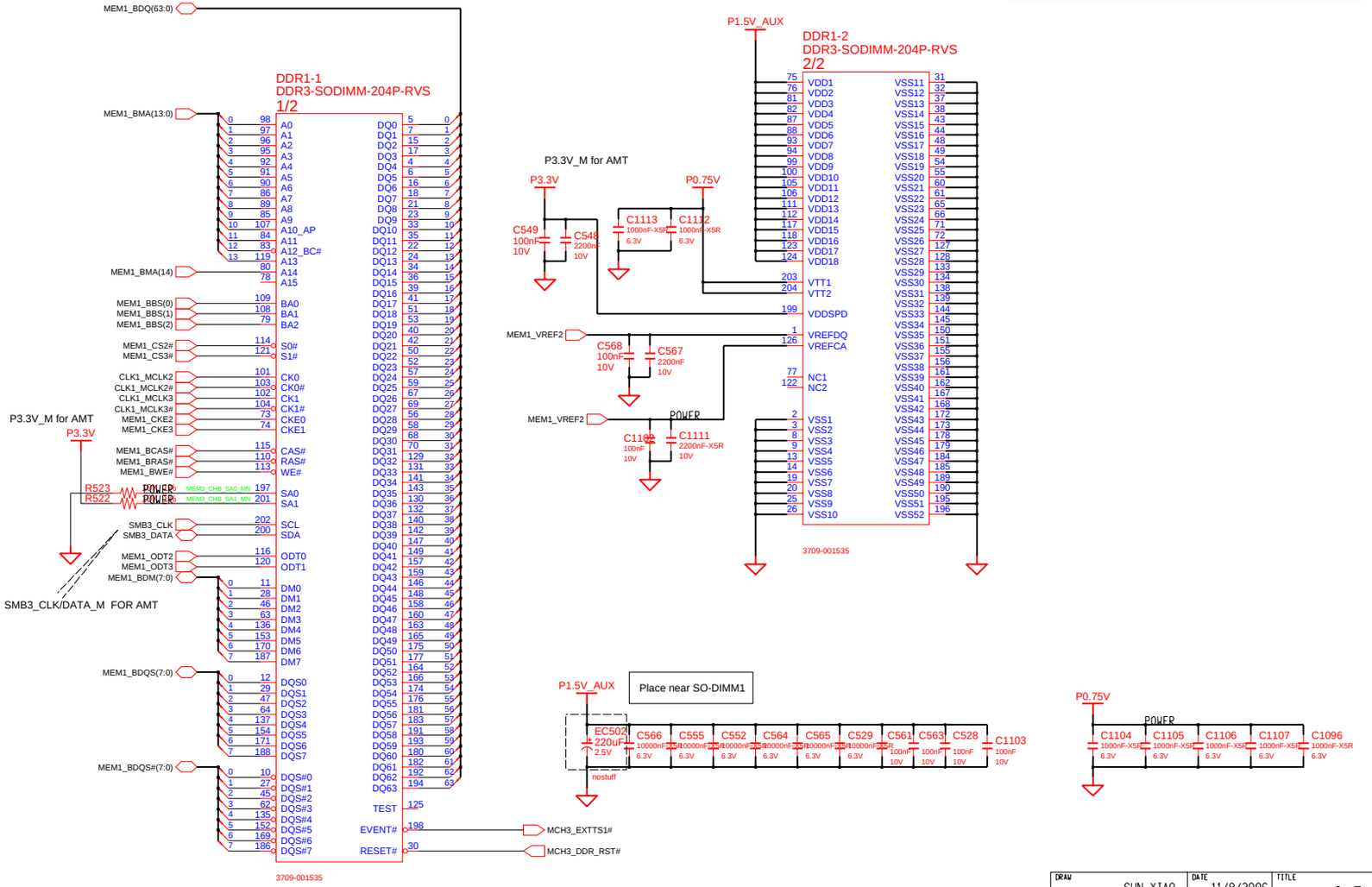

Place near SO-DIMM1

DRAW: SUN XIAO,	DATE: 11/8/2006	TITLE: SuZhou_UL SODIMM_REV DDR3 CH B	SAMSUNG ELECTRONICS
CHECK: WU SHIJIANG,	DEV. STEP: PR		
APPROVAL: BC LEE,	REV: 1.0		PART NO. BA41-01213A
MODULE CODE	LAST EDIT: November 25, 2009 15:50:02 PM		PAGE 19 OF 51

SAMSUNG PROPRIETARY
THIS DOCUMENT CONTAINS CONFIDENTIAL PROPRIETARY INFORMATION THAT IS SAMSUNG ELECTRONICS CO'S PROPERTY. DO NOT DISCLOSE TO OR DUPLICATE FOR OTHERS EXCEPT AS AUTHORIZED BY SAMSUNG.

Internal VR Strap

INTVRMEN	Pull up
VccSus1_05, VccSus1_5, VccCL1_5	
VccLAN1_05, VccCL1_05	

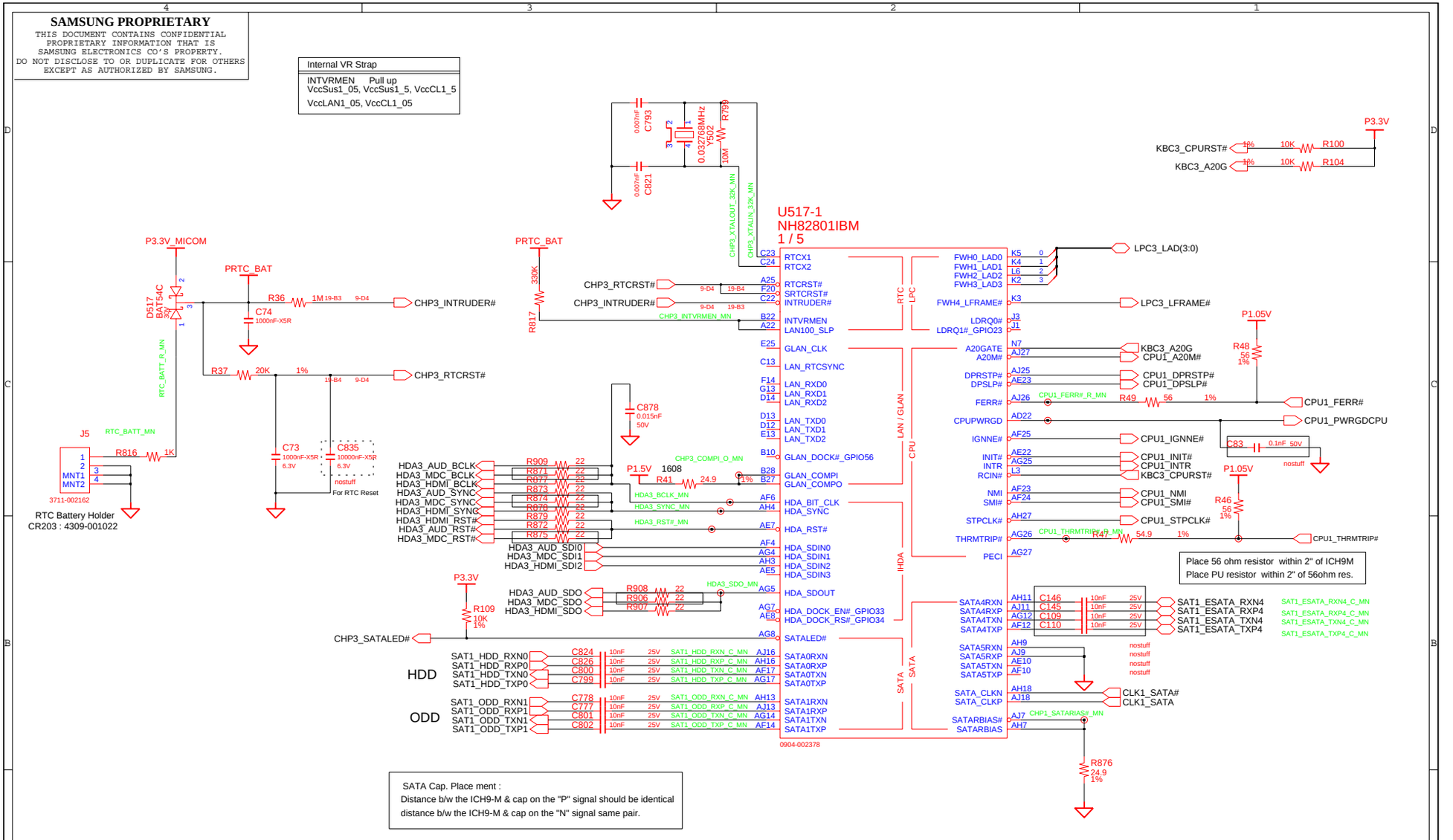

DRAW: SUN XIAO,	DATE: 1/10/2008	TITLE: SuZhou_UL ICH_9M_B ICH9-M (1/5)	SAMSUNG ELECTRONICS
CHECK: WU SHIJIANG,	DEV. STEP: PR		
APPROVAL: BC LEE,	REV: 1.0		PART NO. BA41-01213A
MODULE CODE	LAST EDIT: November 25, 2009 15:50:02 PM		PAGE 20 OF 51

SAMSUNG PROPRIETARY
THIS DOCUMENT CONTAINS CONFIDENTIAL PROPRIETARY INFORMATION THAT IS SAMSUNG ELECTRONICS CO'S PROPERTY. DO NOT DISCLOSE TO OR DUPLICATE FOR OTHERS EXCEPT AS AUTHORIZED BY SAMSUNG.

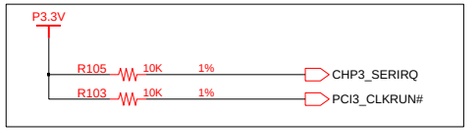

LPC option ; These are used with LPC

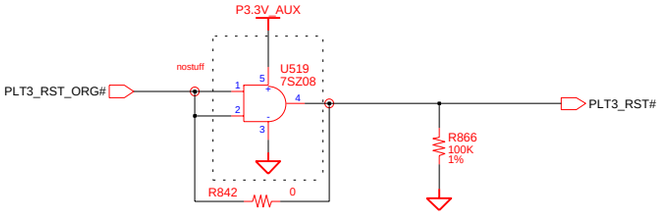

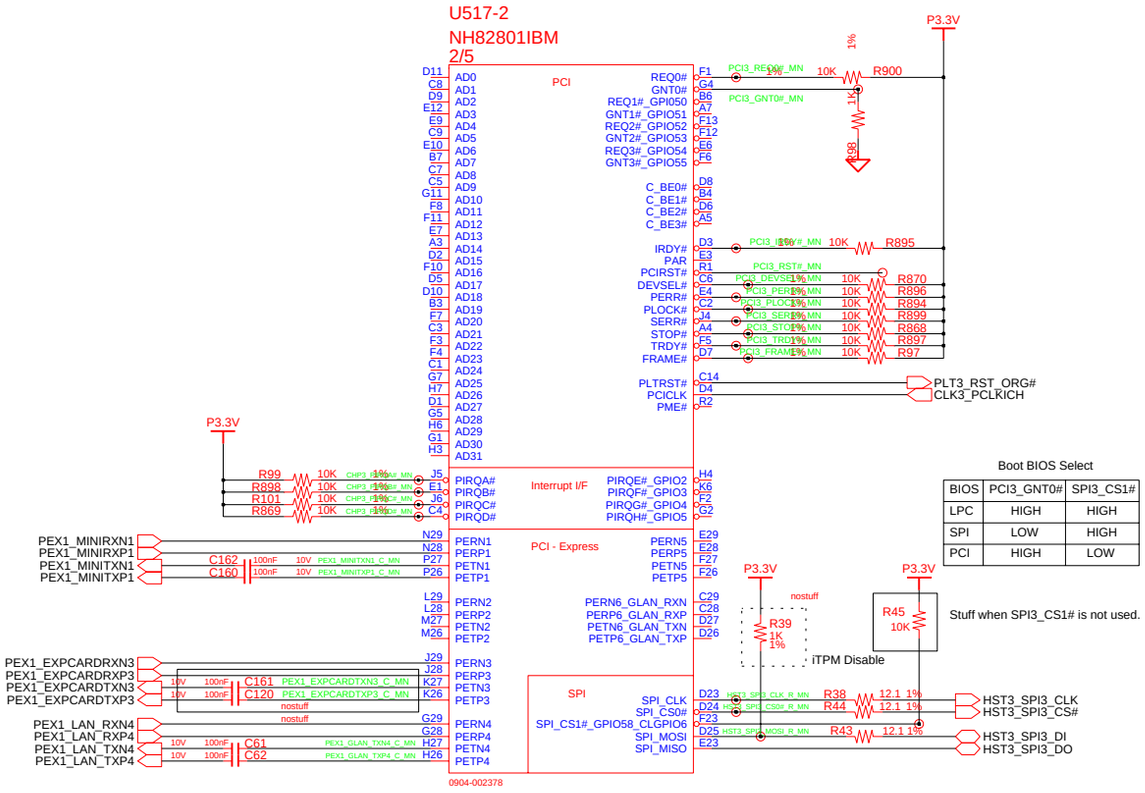

Boot BIOS Select

BIOS	PCI3_GNT0#	SPI3_CS1#
LPC	HIGH	HIGH
SPI	LOW	HIGH
PCI	HIGH	LOW

AC caps : PCIE need to be within 250mils of the driver
Resistor for Test : Place Stuffing Option to minimize stubs

DRAW: SUN XIAO,	DATE: 1/10/2008	TITLE: SuZhou_UL ICH_9M_B ICH9-M (2/5)	SAMSUNG ELECTRONICS
CHECK: WU SHIJIANG,	DEV. STEP: PR		
APPROVAL: BC LEE,	REV: 1.0		PART NO. BA41-01213A
MODULE CODE: undefined	LAST EDIT: November 25, 2009 15:50:02 PM		PAGE 21 OF 51

SAMSUNG PROPRIETARY
THIS DOCUMENT CONTAINS CONFIDENTIAL PROPRIETARY INFORMATION THAT IS SAMSUNG ELECTRONICS CO'S PROPERTY. DO NOT DISCLOSE TO OR DUPLICATE FOR OTHERS EXCEPT AS AUTHORIZED BY SAMSUNG.

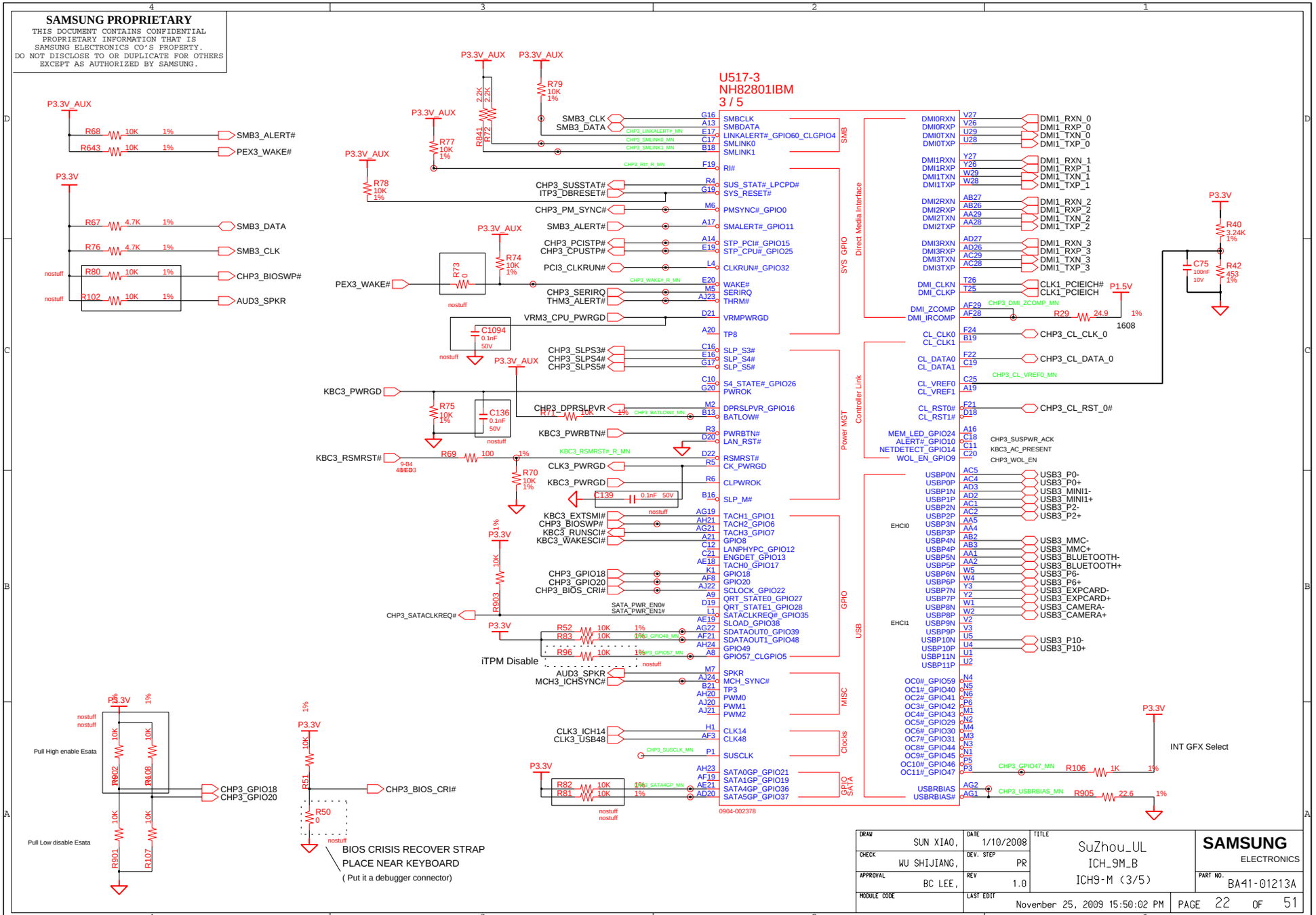

DRAW: SUN XIAO,	DATE: 1/10/2008	TITLE: SuZhou_UL ICH_9M_B ICH9-M (3/5)	SAMSUNG ELECTRONICS
CHECK: WU SHIJIANG,	DEV. STEP: PR		PART NO. BA41-01213A
APPROVAL: BC LEE,	REV: 1.0		
MODULE CODE	LAST EDIT: November 25, 2009 15:50:02 PM	PAGE 22 OF 51	

SAMSUNG PROPRIETARY
THIS DOCUMENT CONTAINS CONFIDENTIAL PROPRIETARY INFORMATION THAT IS SAMSUNG ELECTRONICS CO'S PROPERTY. DO NOT DISCLOSE TO OR DUPLICATE FOR OTHERS EXCEPT AS AUTHORIZED BY SAMSUNG.

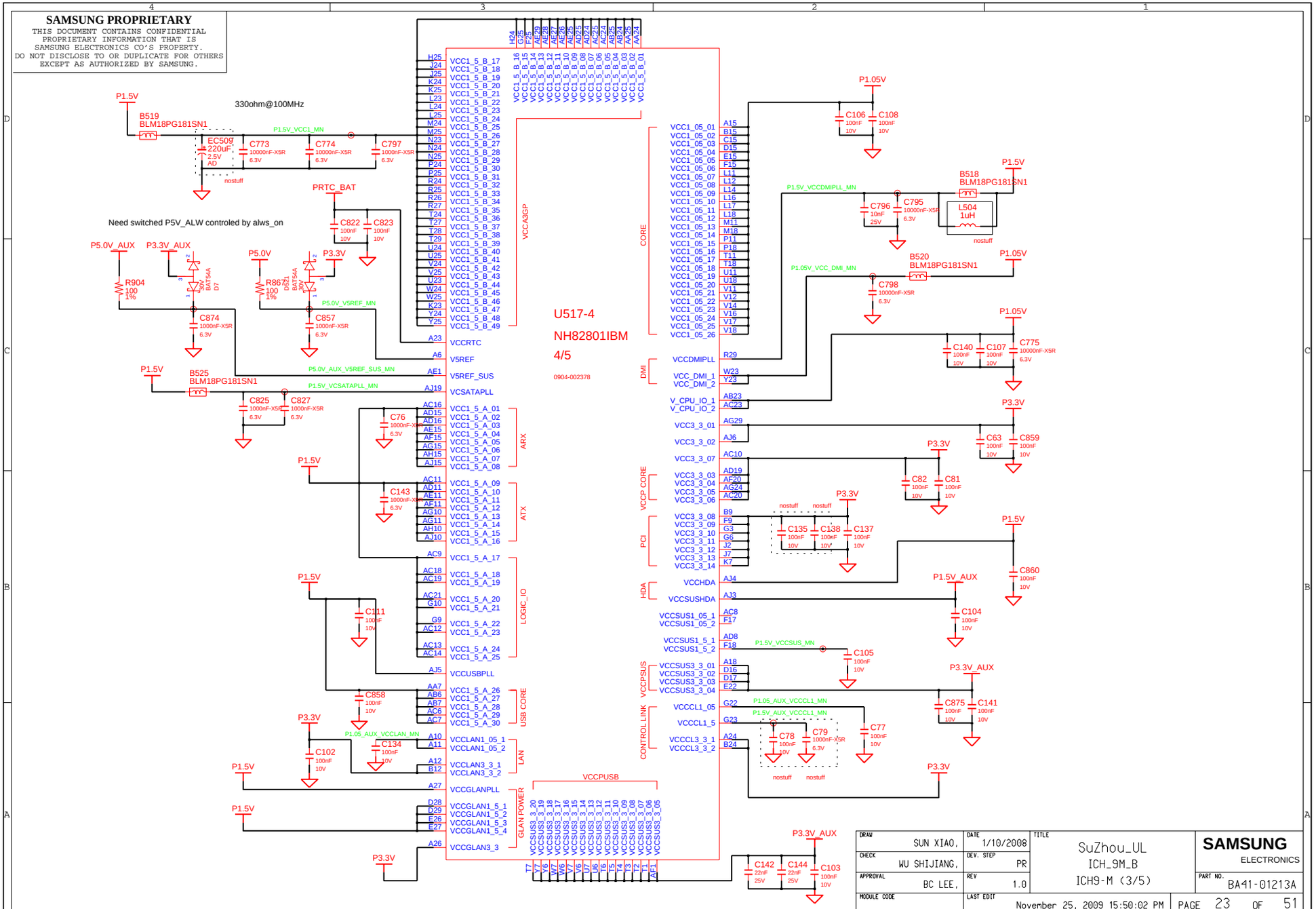

DRAW: SUN XIAO,	DATE: 1/10/2008	TITLE: SuZhou_UL ICH_9M_B ICH9-M (3/5)	SAMSUNG ELECTRONICS
CHECK: WU SHIJIANG,	DEV. STEP: PR		PART NO. BA41-01213A
APPROVAL: BC LEE,	REV: 1.0		
MODULE CODE	LAST EDIT: November 25, 2009 15:50:02 PM		PAGE 23 OF 51

SAMSUNG PROPRIETARY

THIS DOCUMENT CONTAINS CONFIDENTIAL PROPRIETARY INFORMATION THAT IS SAMSUNG ELECTRONICS CO'S PROPERTY. DO NOT DISCLOSE TO OR DUPLICATE FOR OTHERS EXCEPT AS AUTHORIZED BY SAMSUNG.

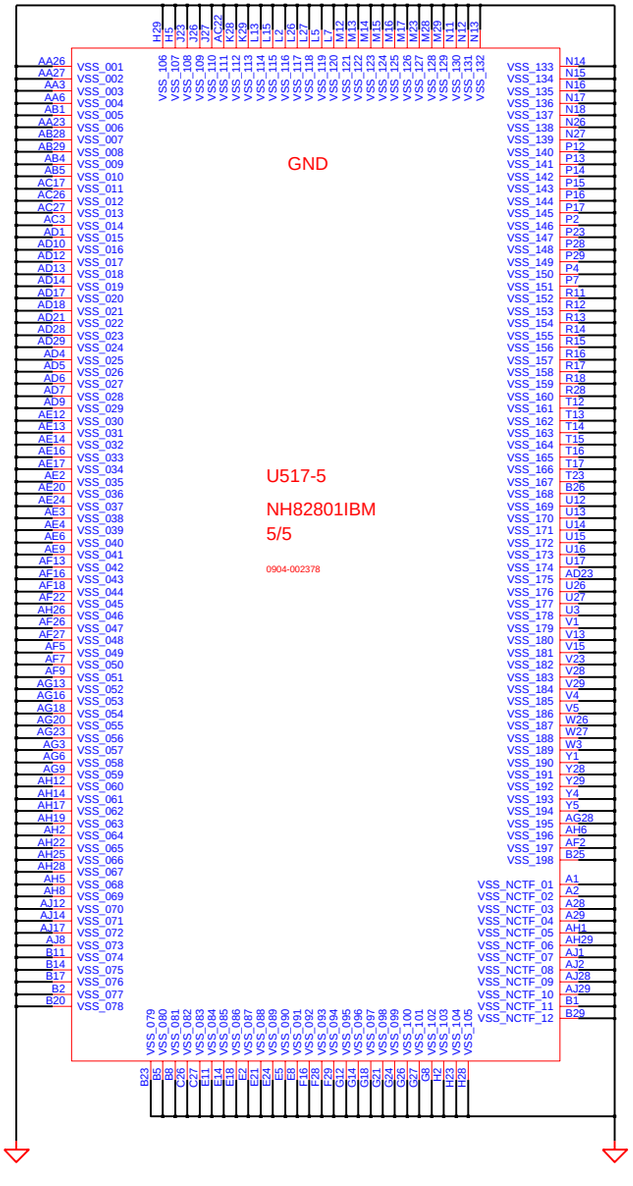

DRAW: SUN XIAO,	DATE: 1/10/2008	TITLE: SuZhou_UL ICH_9M_B ICH9-M (5/5)	SAMSUNG ELECTRONICS
CHECK: WU SHIJIANG,	DEV. STEP: PR		PART NO. BA41-01213A
APPROVAL: BC LEE,	REV: 1.0		
MODULE CODE	LAST EDIT: November 25, 2009 15:50:02 PM	PAGE 24 OF 51	

SAMSUNG PROPRIETARY
THIS DOCUMENT CONTAINS CONFIDENTIAL PROPRIETARY INFORMATION THAT IS SAMSUNG ELECTRONICS CO'S PROPERTY. DO NOT DISCLOSE TO OR DUPLICATE FOR OTHERS EXCEPT AS AUTHORIZED BY SAMSUNG.

SPI_BIOS_ROM

16MBit

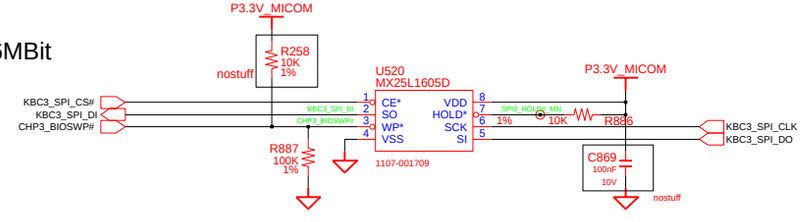

02	VERIFY REAL MODE	66	CONFIGURE ADVANCE CACHE REG.
03	DISABLE NMI	6A	DISPLAY EXTERNAL CACHE SIZE
04	GET CPU TYPE	6C	DISPLAY SHADOW MESSAGE
06	INIT. SYSTEM H/W	6E	DISPLAY NON-DISPOSABLE SEGMENT
08	INIT. CHIPSET REG.	70	DISPLAY ERROR MESSAGE
09	SET IN POST FLAG	72	CHECK FOR CONFIGURATION ERROR
0A	INIT CPU.REG	74	TEST REAL-TIME CLOCK
0B	CPU CACHE ON	76	CHECK FOR KEYBOARD EERROR
0C	INIT.CACHE TO POST	7C	SETUP HARDWARE INTERRUPT VECTOR
OE	INIT. I/O VALUE	7E	TEST COPROCESSER IF PRESENT
0F	ENABLE THE L-BUS IDE	80	DISABLE ON-BOARD I/O PORT
10	INIT. POWER MANAGER	82	DETECT AND INSTALL EXT.RS232C
11	LOAD ALTERNATE REG.	84	DETECT AND INSTALL EXT.PARALLEL
13	PCI BUS MASTER RESET	86	RE-INIT. ON-BOARD I/O PORT
		88	INIT. BIOS DATA ROM
	WITH INITIAL POST VALUE	8A	INIT.EXTENDED BIOS DATA AREA
14	INIT. KEYBOARD CONTROLLER	8C	INIT. FDD CONTROLLER
16	CHECK CHECKSUM	9A	SHADOW OPTION ROMS
18	8254 TIMER INIT.	9C	SETUP POWER MANAGEMENT
1A	8237 DMA CONTROLLER INIT.	9E	ENABLE H/W INTERRUPT
1C	RESET INTERRUP CONTROLLER	A0	SET TIME OF DAY
20	TEST DRAM REFRESH	A4	INIT. TYPEMATIC RATE
22	TEST 8742 KEYBOARD CONTROLLER	A8	ERASE F2 PROMPT
24	SET ES SEGMENT REG. TO 4GB	AA	SCAN FOR F2 KEY STROKE
26	ENABLE A20	AC	ENTER SETUP
28	AUTO SIZING DRAM	AE	CLEAR IN POST FLAG
32	COMPUTE THE CPU SPEED	B0	CHECK FOR ERRORS
34	TESET CMOS RAM	B2	POST DONE-PREPARE TO BOOT O/S
38	SHADOW SYSTEM BIOS ROM	B4	ONE BEEP
3A	AUTO SIZING CACHE	B6	CHECK PASSWORD (OPTION)
3C	CONFIGURE ADVANCED CHIPSET REG.	B7	ACPI INIT
3D	LOAD ALTER REG. WITH CMOS VALUE	BA	DMI INIT
42	INIT. INTERRUPT VECTOR	BE	CLEAR SCREEN
44	INIT. BIOS INTERRUPT	C0	TRY BOOT WITH INT19
46	CHECK ROM COPYRIGHT NOTICE	D0	INTERRUPT HANDLER ERROR
47	INIT. I20 SUPPORT IF INSTALLED	D2	UNKNOWN INTERRUPT ERROR
48	CHECK VIDEO CONFIGURE AGAINST CMOS	D4	PENDING INTERRUPT ERROR
49	INIT. PCI BUS AND DEVICE	D6	SHUTDOWN 5
4A	INIT. ALL VIDEO BIOS ROM	D8	SHUTDOWN ERROR
4C	SHADOW VIDEO BIOS ROM	DA	EXTENDED BLOCK MOVE
50	DISPLAY CPU TYPE AND SPEED	DC	SHUTDOWN 10
52	TEST KEYBOARD	89	ENABLE NMI
54	SET KEYCLICK IF ENABLED	90	INIT. HDD CONTROLLER
56	ENABLE KEYBOARD	91	INIT. LOCAL BUS HDD CONTROLLER
58	TEST FOR UNEXPECTED INTERRUPTS	92	JUMP TO USER PATCH 2
5A	DISPLAY " PRESS ..... SETUP"	94	DISABLE A20 ADDRESS LINE
5C	TEST RAM GETWEEN 512K AND 640K	96	CLEAR HUGE ES SEGMENT REG.
60	TEST EXTENDED MEMORY	98	SEARCH FOR OPTION ROMS
62	TEST EXTENDED MEMORY ADDRESS LINE		
64	JUMP TO USER PATCH 1		

80H DECODER CONNECTOR

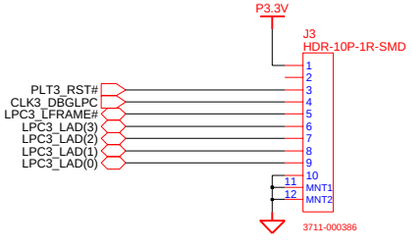

ICT PORT

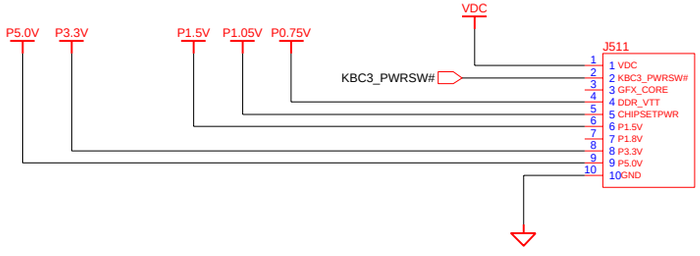

DRAW: SUN XIAO,	DATE: 8/12/2006	TITLE: SuZhou_UL SPI_BIOS_ROM SPI_BIOS_ROM		SAMSUNG ELECTRONICS
CHECK: WU SHIJIANG,	DEV. STEP: PR			
APPROVAL: BC LEE,	REV: 1.0			PART NO. BA41-01213A
MODULE CODE	LAST EDIT: November 25, 2009 15:50:02 PM		PAGE 25 OF 51	

SAMSUNG PROPRIETARY
THIS DOCUMENT CONTAINS CONFIDENTIAL PROPRIETARY INFORMATION THAT IS SAMSUNG ELECTRONICS CO'S PROPERTY. DO NOT DISCLOSE TO OR DUPLICATE FOR OTHERS EXCEPT AS AUTHORIZED BY SAMSUNG.

CRT

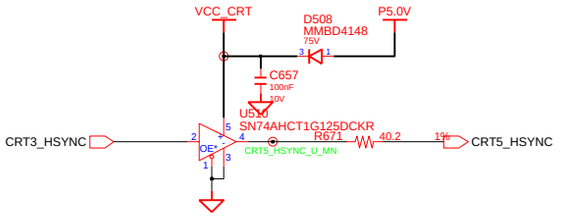

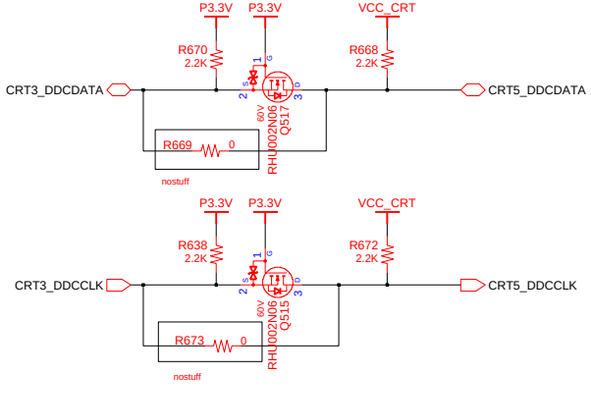

Check "CRT3_DDCCLK/DATA" Voltage Level

2N06 Can be replaced with SM6K2

CRT CONNECTOR

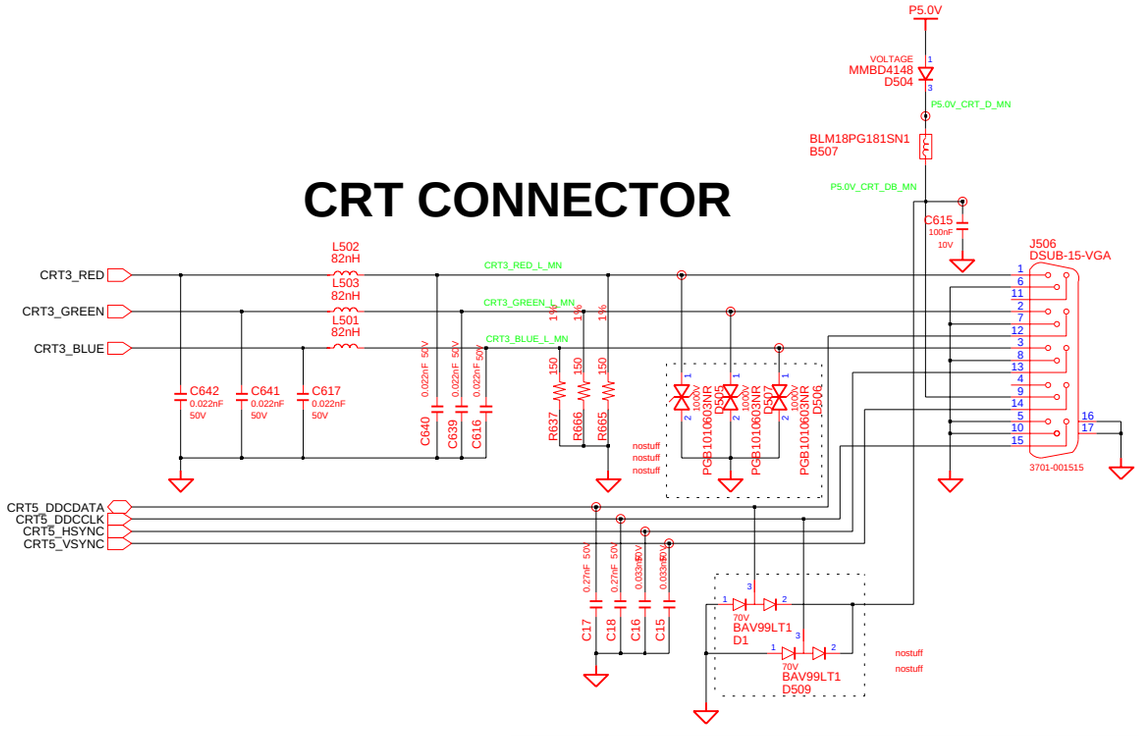

DESIGN: SUN XIAO,	DATE: 01/08/2009	TITLE: SuZhou_UL GRAPHICS_IF CRT	SAMSUNG ELECTRONICS
CHECK: WU SHIJIANG,	DEV. STEP: PR		PART NO. BA41-01213A
APPROVAL: BC LEE,	REV: 1.0		
MODULE CODE	LAST EDIT: November 25, 2009 15:50:02 PM	PAGE 26 OF 51	

SAMSUNG PROPRIETARY
THIS DOCUMENT CONTAINS CONFIDENTIAL PROPRIETARY INFORMATION THAT IS SAMSUNG ELECTRONICS CO'S PROPERTY. DO NOT DISCLOSE TO OR DUPLICATE FOR OTHERS EXCEPT AS AUTHORIZED BY SAMSUNG.

LVDS

Backlight On

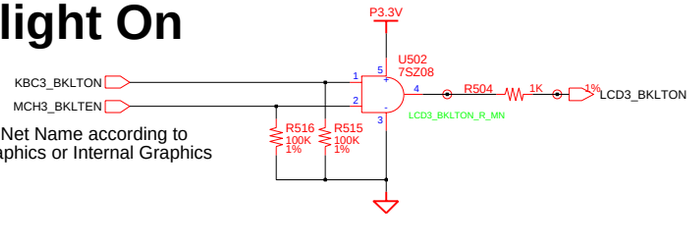

Change the Net Name according to External Graphics or Internal Graphics

LCD Power

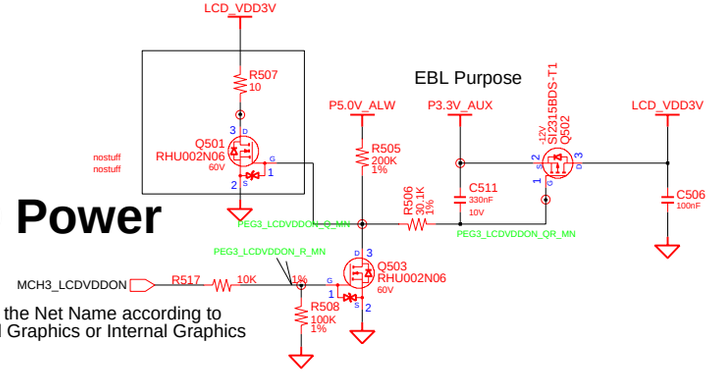

Change the Net Name according to External Graphics or Internal Graphics

Inverter Power

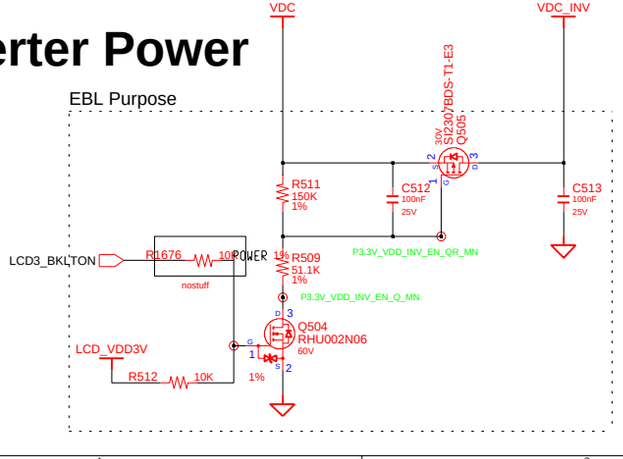

1Ch. LCD Connector

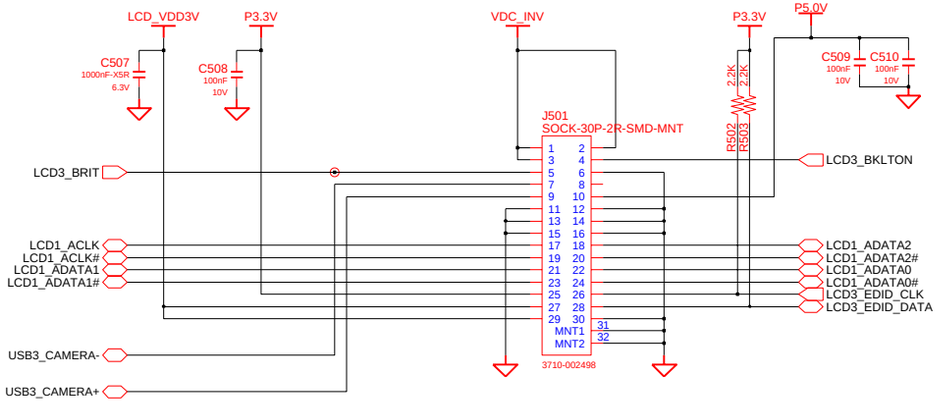

DESIGN: SUN XIAO,	DATE: 01/08/2009	TITLE: SuZhou_UL GRAPHICS_IF LVDS	SAMSUNG ELECTRONICS
CHECK: WU SHIJIANG,	DEV. STEP: PR		
APPROVAL: BC LEE,	REV: 1.0		PART NO. BA41-01213A
MODULE CODE	LAST EDIT: November 25, 2009 15:50:02 PM	PAGE 27 OF 51	

SAMSUNG PROPRIETARY
THIS DOCUMENT CONTAINS CONFIDENTIAL PROPRIETARY INFORMATION THAT IS SAMSUNG ELECTRONICS CO'S PROPERTY. DO NOT DISCLOSE TO OR DUPLICATE FOR OTHERS EXCEPT AS AUTHORIZED BY SAMSUNG.

HDMI

HDMI port for External Graphics

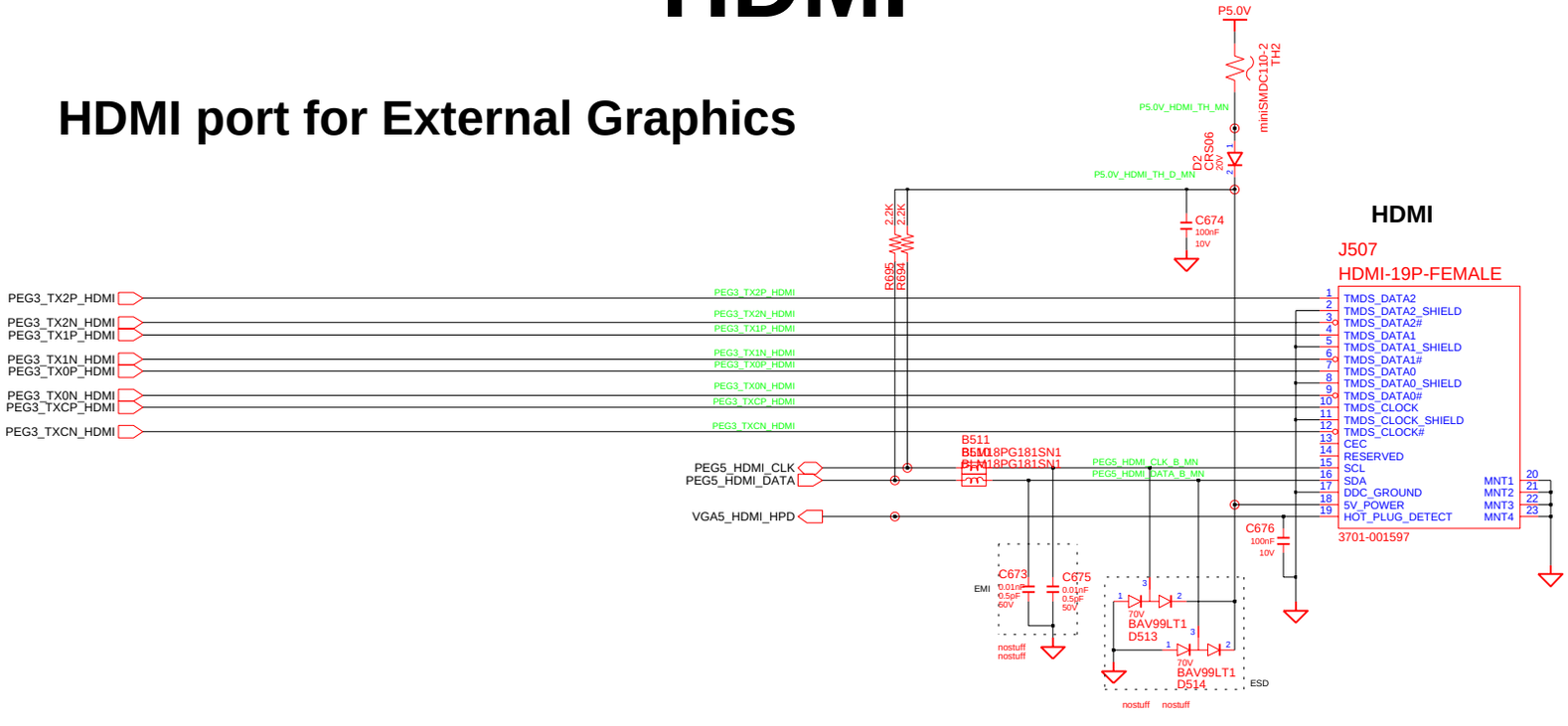

DESIGN: SUN XIAO,	DATE: 01/08/2009	TITLE: SuZhou_UL GRAPHICS_IF HDMI	SAMSUNG ELECTRONICS
CHECK: WU SHIJIANG,	DEV. STEP: PR		PART NO. BA41-01213A
APPROVAL: BC LEE,	REV: 1.0		
MODULE CODE	LAST EDIT: November 25, 2009 15:50:02 PM	PAGE 28 OF 51	

SAMSUNG PROPRIETARY
THIS DOCUMENT CONTAINS CONFIDENTIAL PROPRIETARY INFORMATION THAT IS SAMSUNG ELECTRONICS CO'S PROPERTY. DO NOT DISCLOSE TO OR DUPLICATE FOR OTHERS EXCEPT AS AUTHORIZED BY SAMSUNG.

HDMI Level Shifter for Int. Graphic only

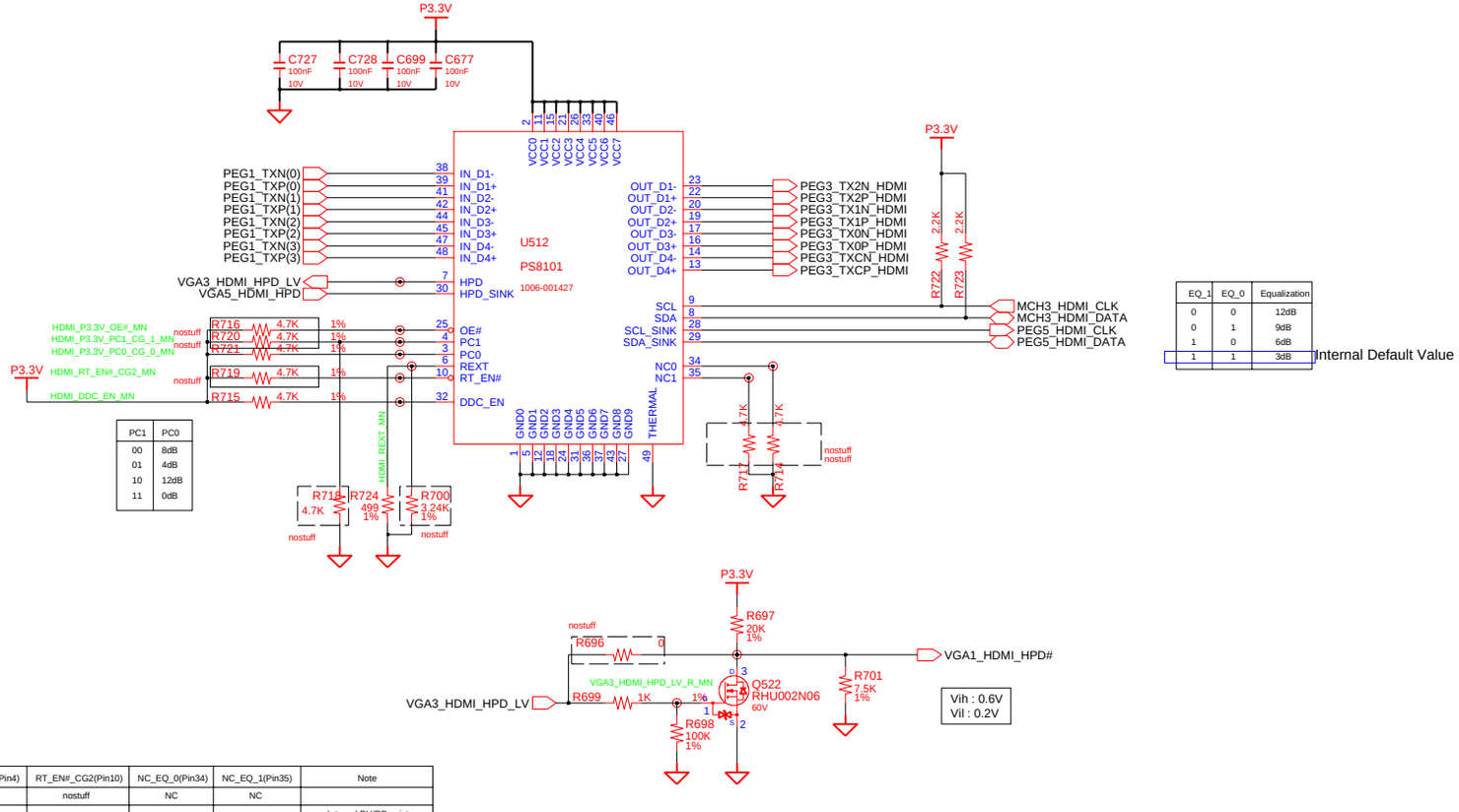

CG_2	CG_1	CG_0	Swing	Pre-amp	Slew rate
0	0	0	450mV	0dB	0dB
0	0	1	490mV	0dB	-3dB
0	1	0	450mV	0dB	-3dB
0	1	1	460mV	0dB	-4dB
1	0	0	340mV	0dB	0dB
1	0	1	400mV	2dB	0dB
1	1	0	400mV	2dB	0dB
1	1	1	420mV	0dB	0dB

PC1	PC0
00	8dB
01	4dB
10	12dB
11	0dB

EQ_1	EQ_0	Equalization
0	0	12dB
0	1	9dB
1	0	6dB
1	1	3dB

Internal Default Value

HDMI Level Shifter	REXT(Pin6)	PC1_CG0(Pin3)	PC1_CG1(Pin4)	RT_EN#_CG2(Pin10)	NC_EQ_0(Pin34)	NC_EQ_1(Pin35)	Note
PS8101	499 phm	stuff	nostuff	nostuff	NC	NC	
ASM1442	3.4K(3.24~3.3K)	nostuff	nostuff	nostuff	nostuff	nostuff	Internal PU/PD exist CGs nostuff is 450mV swing

DESIGN: SUN XIAO,	DATE: 9/14/2009	TITLE: SuZhou_UL MAIN HDMI LEVEL SHIFTER	SAMSUNG ELECTRONICS
CHECK: WU SHIJIANG,	DEV. STEP: PR		
APPROVAL: BC LEE,	REV: 1.0		PART NO. BA41-01213A
MODULE CODE	LAST EDIT: November 25, 2009 15:50:02 PM		PAGE 29 OF 51

SAMSUNG PROPRIETARY
THIS DOCUMENT CONTAINS CONFIDENTIAL PROPRIETARY INFORMATION THAT IS SAMSUNG ELECTRONICS CO'S PROPERTY. DO NOT DISCLOSE TO OR DUPLICATE FOR OTHERS EXCEPT AS AUTHORIZED BY SAMSUNG.

Codec Pin9 Setting	
S/B with Low Voltage IO	S/B without Low Voltage IO
Pin9 : 1.5V	Pin9 : 3.3V

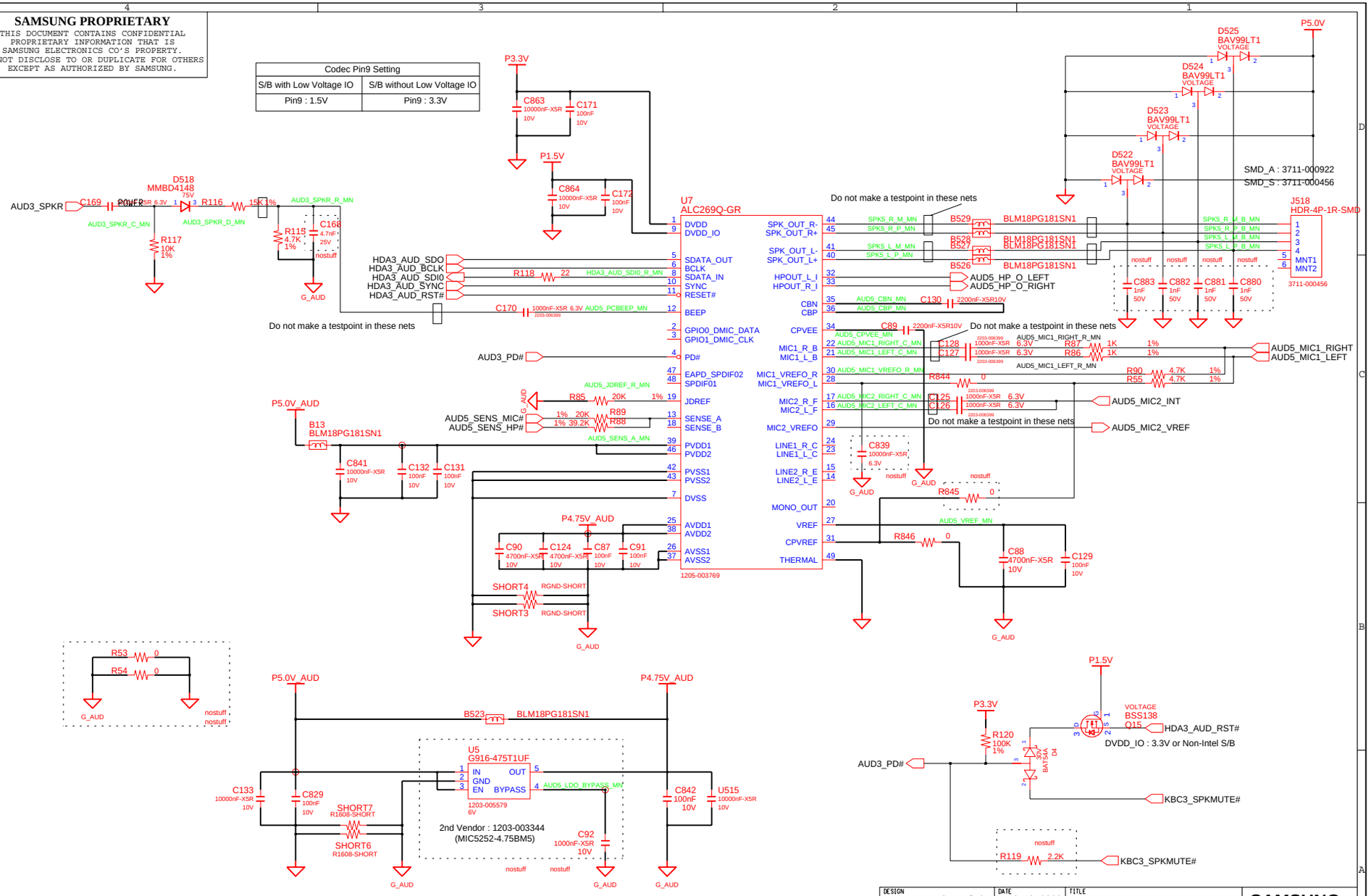

DESIGN: SUN XIAO,	DATE: 3/13/2009	TITLE: SuZhou_UL HDA_ALC269_GR AUDIO CODEC	**SAMSUNG** ELECTRONICS
CHECK: WU SHIJIANG,	DEV. STEP: PR		
APPROVAL: BC LEE,	REV: 1.0		PART NO. BA41-01213A
MODULE CODE	LAST EDIT: November 25, 2009 15:50:02 PM		PAGE 30 OF 51

SAMSUNG PROPRIETARY
THIS DOCUMENT CONTAINS CONFIDENTIAL PROPRIETARY INFORMATION THAT IS SAMSUNG ELECTRONICS CO'S PROPERTY. DO NOT DISCLOSE TO OR DUPLICATE FOR OTHERS EXCEPT AS AUTHORIZED BY SAMSUNG.

HEADPHONE

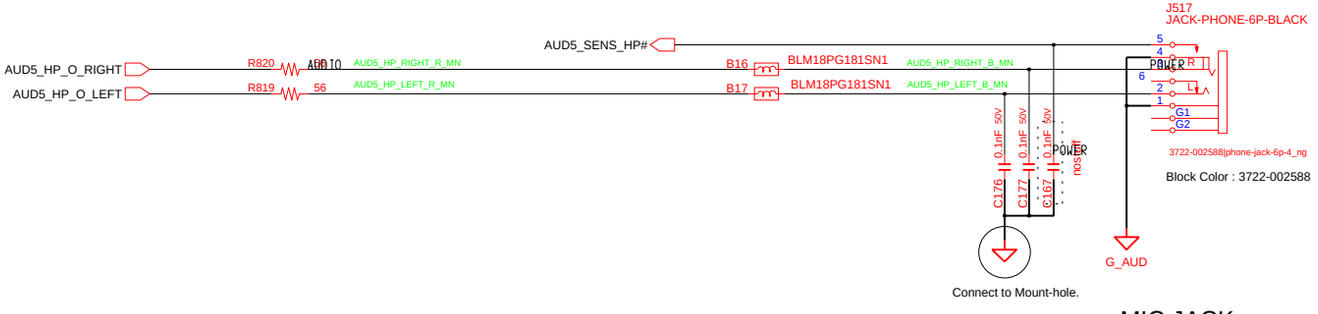

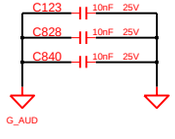

MIC JACK

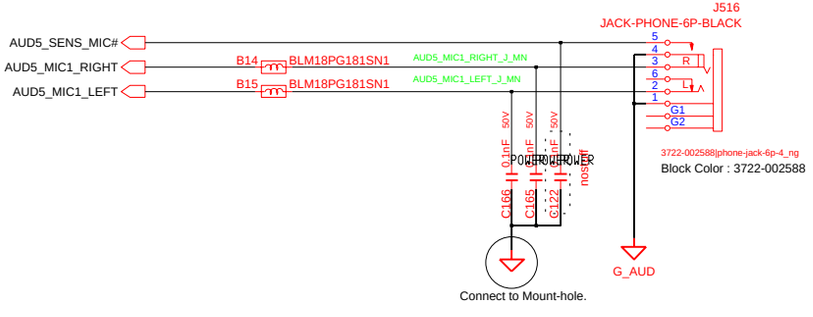

Analog mono Mic Ass'y : Place inside Audio Analog Plane

SMD MIC

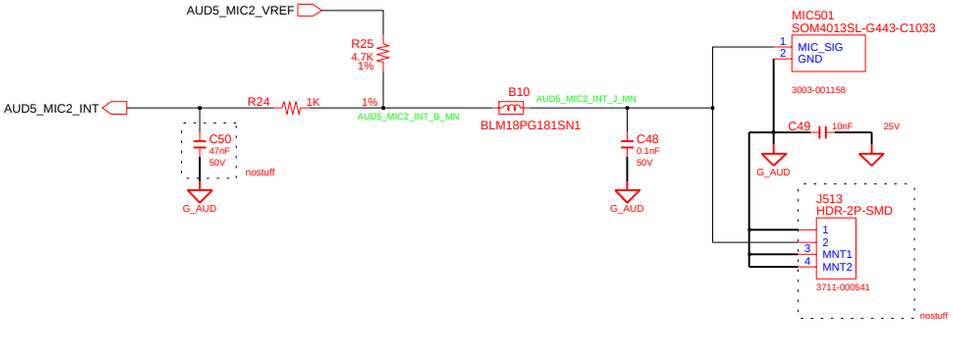

DESIGN: SUN XIAO,	DATE: 3/13/2009	TITLE: SuZhou_UL HDA_ALC269_GR AUDIO INPUT/OUTPUT	SAMSUNG ELECTRONICS
CHECK: WU SHIJIANG,	DEV. STEP: PR		
APPROVAL: BC LEE,	REV: 1.0		PART NO. BA41-01213A
MODULE CODE	LAST EDIT: November 25, 2009 15:50:02 PM		PAGE 31 OF 51

SAMSUNG PROPRIETARY
THIS DOCUMENT CONTAINS CONFIDENTIAL
PROPRIETARY INFORMATION THAT IS
SAMSUNG ELECTRONICS CO'S PROPERTY.
DO NOT DISCLOSE TO OR DUPLICATE FOR OTHERS
EXCEPT AS AUTHORIZED BY SAMSUNG.

MARVELL 88E8040

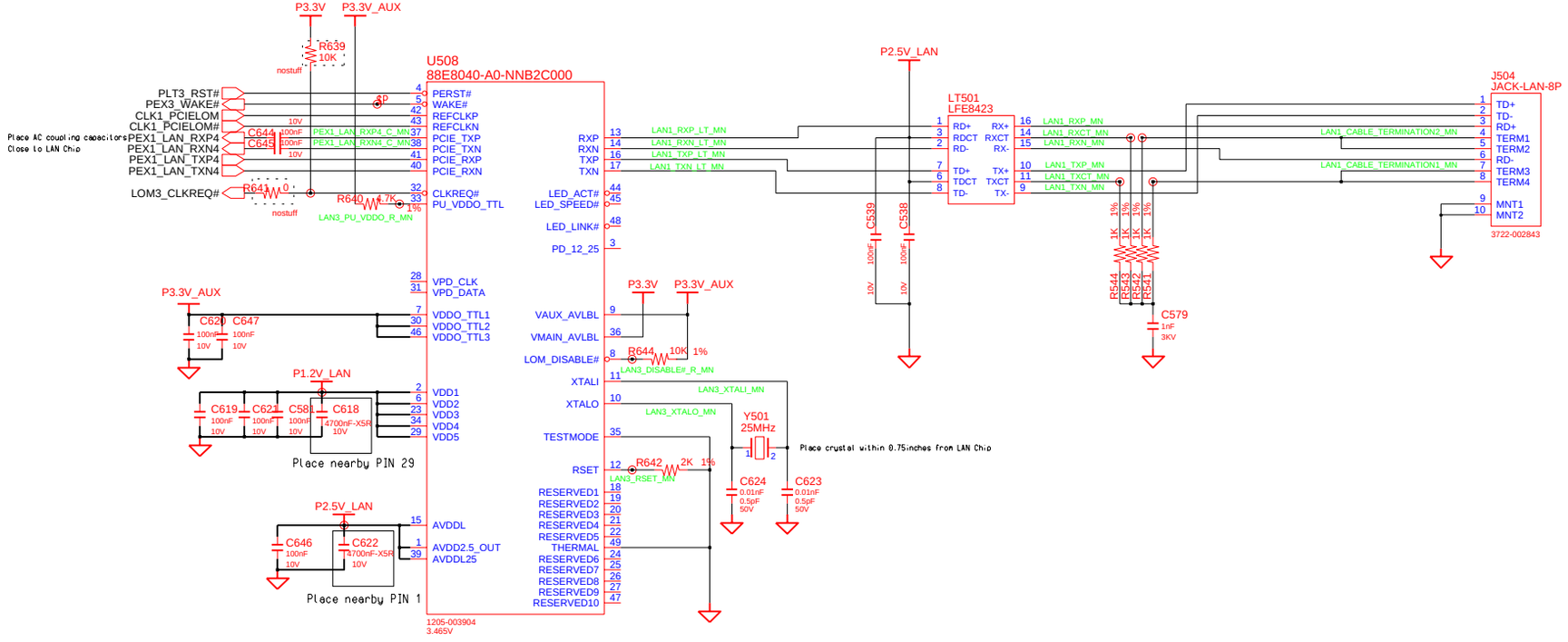

DESIGN: SUN XIAO,	DATE: 3/17/2009	TITLE: SuZhou_UL	SAMSUNG ELECTRONICS
CHECK: WU SHIJIANG,	DEV. STEP: PR		
APPROVAL: BC LEE,	REV: 1.0		PART NO. BA41-01213A
MODULE CODE	LAST EDIT: November 25, 2009 15:50:02 PM	PAGE 32 OF 51	

SAMSUNG PROPRIETARY
THIS DOCUMENT CONTAINS CONFIDENTIAL PROPRIETARY INFORMATION THAT IS SAMSUNG ELECTRONICS CO'S PROPERTY. DO NOT DISCLOSE TO OR DUPLICATE FOR OTHERS EXCEPT AS AUTHORIZED BY SAMSUNG.

3 IN 1

P3.3V_MCD distance between R5U880 and socket should be less than 2 inches

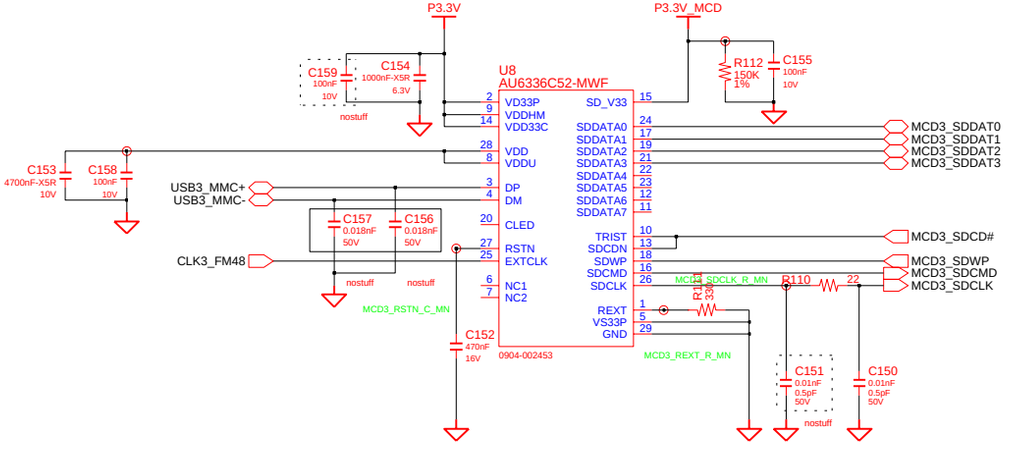

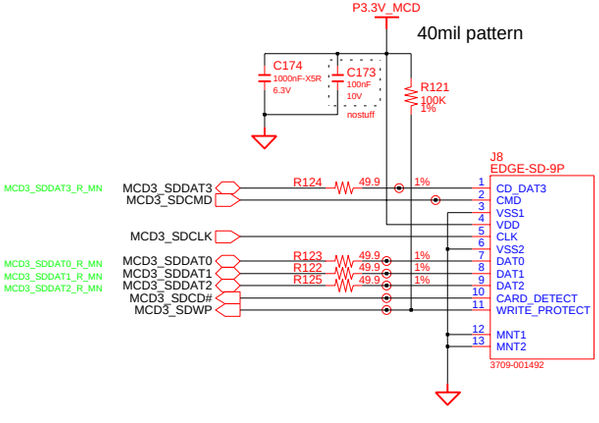

40 mil trace for medica card socket ground

DESIGN: SUN XIAO,	DATE: 4/29/2009	TITLE: SuZhou_UL	SAMSUNG ELECTRONICS
CHECK: WU SHIJIANG,	DEV. STEP: PR		
APPROVAL: BC LEE,	REV: 1.0		PART NO. BA41-01213A
MODULE CODE	LAST EDIT: November 25, 2009 15:50:02 PM	PAGE 33 OF 51	

SAMSUNG PROPRIETARY
THIS DOCUMENT CONTAINS CONFIDENTIAL PROPRIETARY INFORMATION THAT IS SAMSUNG ELECTRONICS CO'S PROPERTY. DO NOT DISCLOSE TO OR DUPLICATE FOR OTHERS EXCEPT AS AUTHORIZED BY SAMSUNG.

WLAN, 7mm

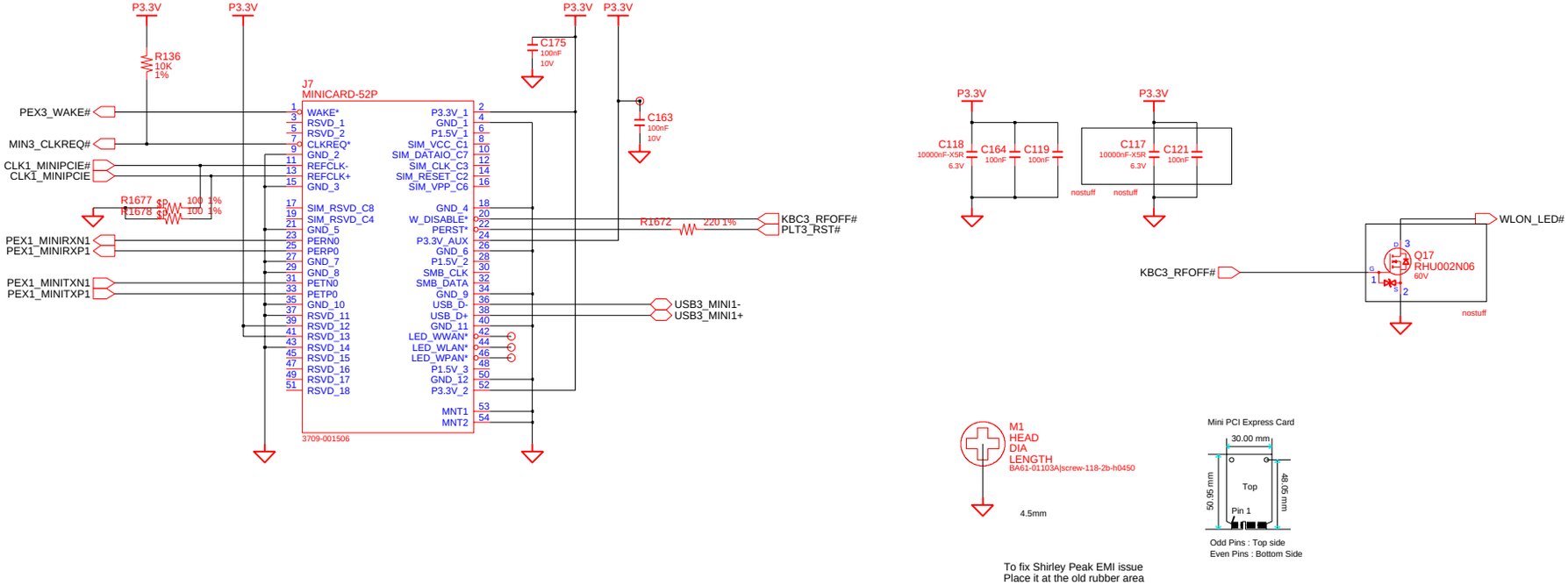

To fix Shirley Peak EMI issue
Place it at the old rubber area

DESIGN: SUN XIAO,	DATE: 6/6/2008	TITLE: SuZhou_UL MINI_PCIE_CONN	SAMSUNG ELECTRONICS
CHECK: WU SHIJIANG,	DEV. STEP: PR		
APPROVAL: BC LEE,	REV: 1.0		PART NO. BA41-01213A
MODULE CODE	LAST EDIT: November 25, 2009 15:50:02 PM		PAGE 34 OF 51

SAMSUNG PROPRIETARY
THIS DOCUMENT CONTAINS CONFIDENTIAL PROPRIETARY INFORMATION THAT IS SAMSUNG ELECTRONICS CO'S PROPERTY. DO NOT DISCLOSE TO OR DUPLICATE FOR OTHERS EXCEPT AS AUTHORIZED BY SAMSUNG.

SATA I/F CONN

SATA HDD CONN

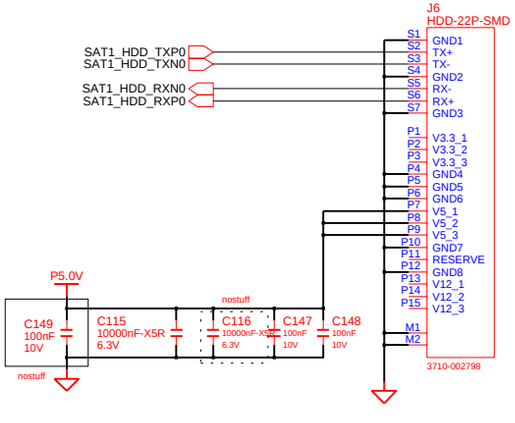

SATA ODD CONN

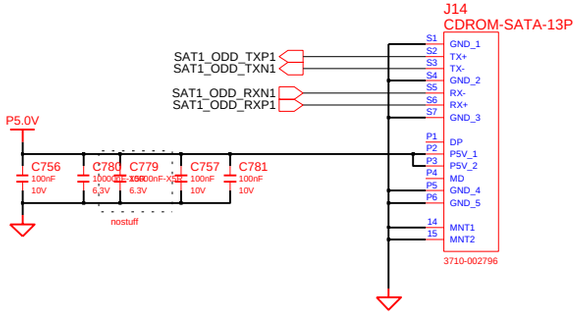

DESIGN: SUN XIAO,	DATE: 6/6/2008	TITLE: SuZhou_UL SATA_DEVICES	SAMSUNG ELECTRONICS
CHECK: WU SHIJIANG,	DEV. STEP: PR		
APPROVAL: BC LEE,	REV: 1.0		PART NO. BA41-01213A
MODULE CODE	LAST EDIT: November 25, 2009 15:50:02 PM		PAGE 35 OF 51

SAMSUNG PROPRIETARY
THIS DOCUMENT CONTAINS CONFIDENTIAL PROPRIETARY INFORMATION THAT IS SAMSUNG ELECTRONICS CO'S PROPERTY. DO NOT DISCLOSE TO OR DUPLICATE FOR OTHERS EXCEPT AS AUTHORIZED BY SAMSUNG.

MAIN BOARD (MICOM)

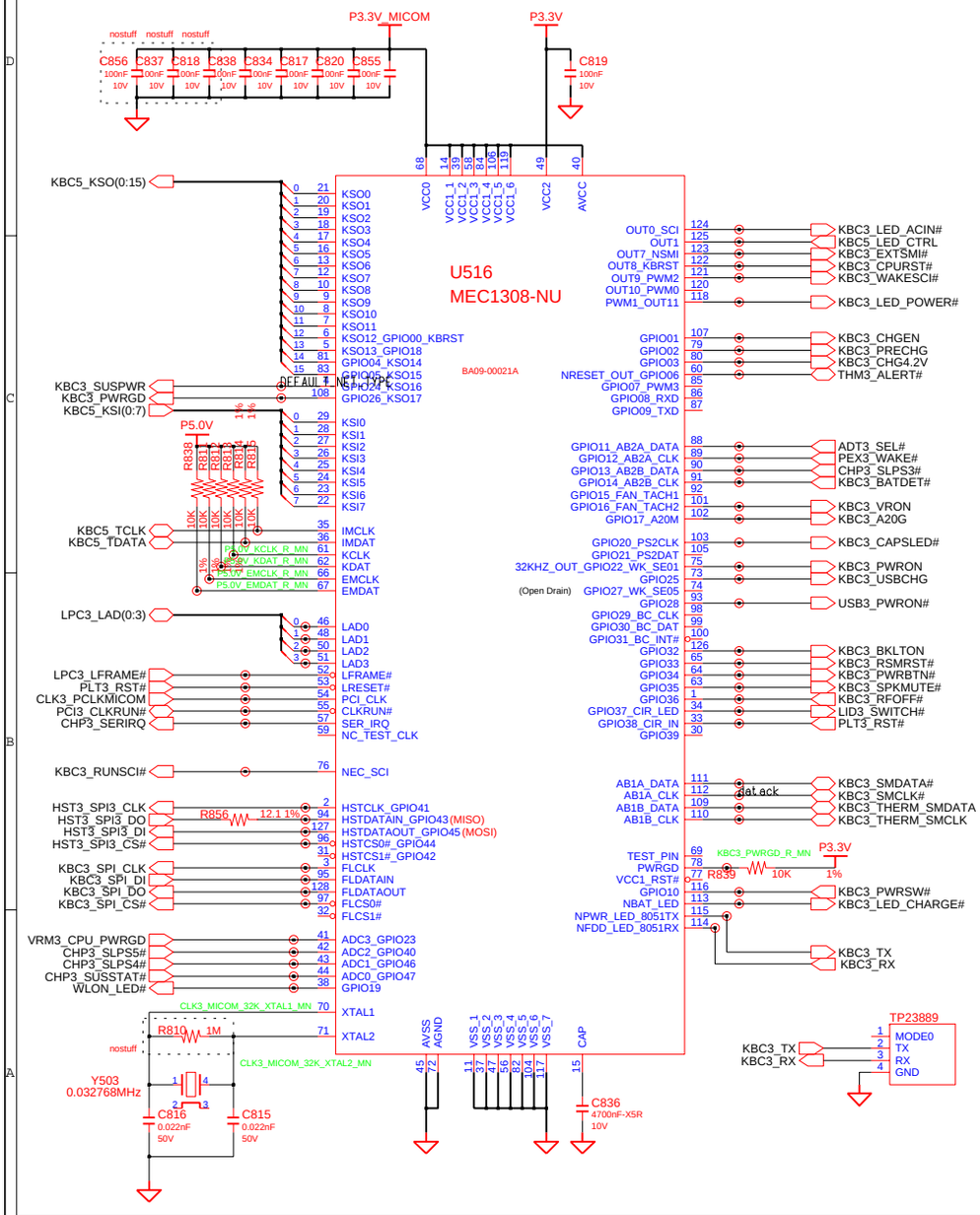

MICOM POWER RESET

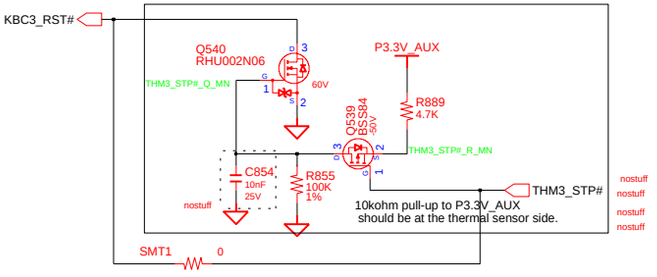

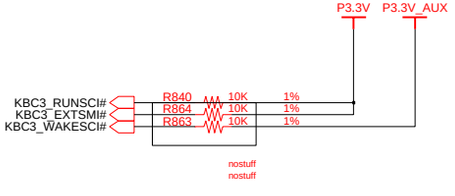

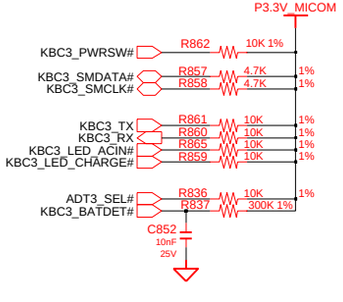

DRAW: SUN XIAO,	DATE: 05/20/2009	TITLE: SuZhou_UL MICOM_SMSC_MEC1308 MICOM_SMSC_MEC1308	SAMSUNG ELECTRONICS
CHECK: WU SHIJIANG,	DEV. STEP: PR		
APPROVAL: BC LEE,	REV: 1.0		PART NO. BA41-01213A
MODULE CODE	LAST EDIT: November 25, 2009 15:50:02 PM		PAGE 36 OF 51

SAMSUNG PROPRIETARY
THIS DOCUMENT CONTAINS CONFIDENTIAL PROPRIETARY INFORMATION THAT IS SAMSUNG ELECTRONICS CO'S PROPERTY. DO NOT DISCLOSE TO OR DUPLICATE FOR OTHERS EXCEPT AS AUTHORIZED BY SAMSUNG.

Micom Glue Logic

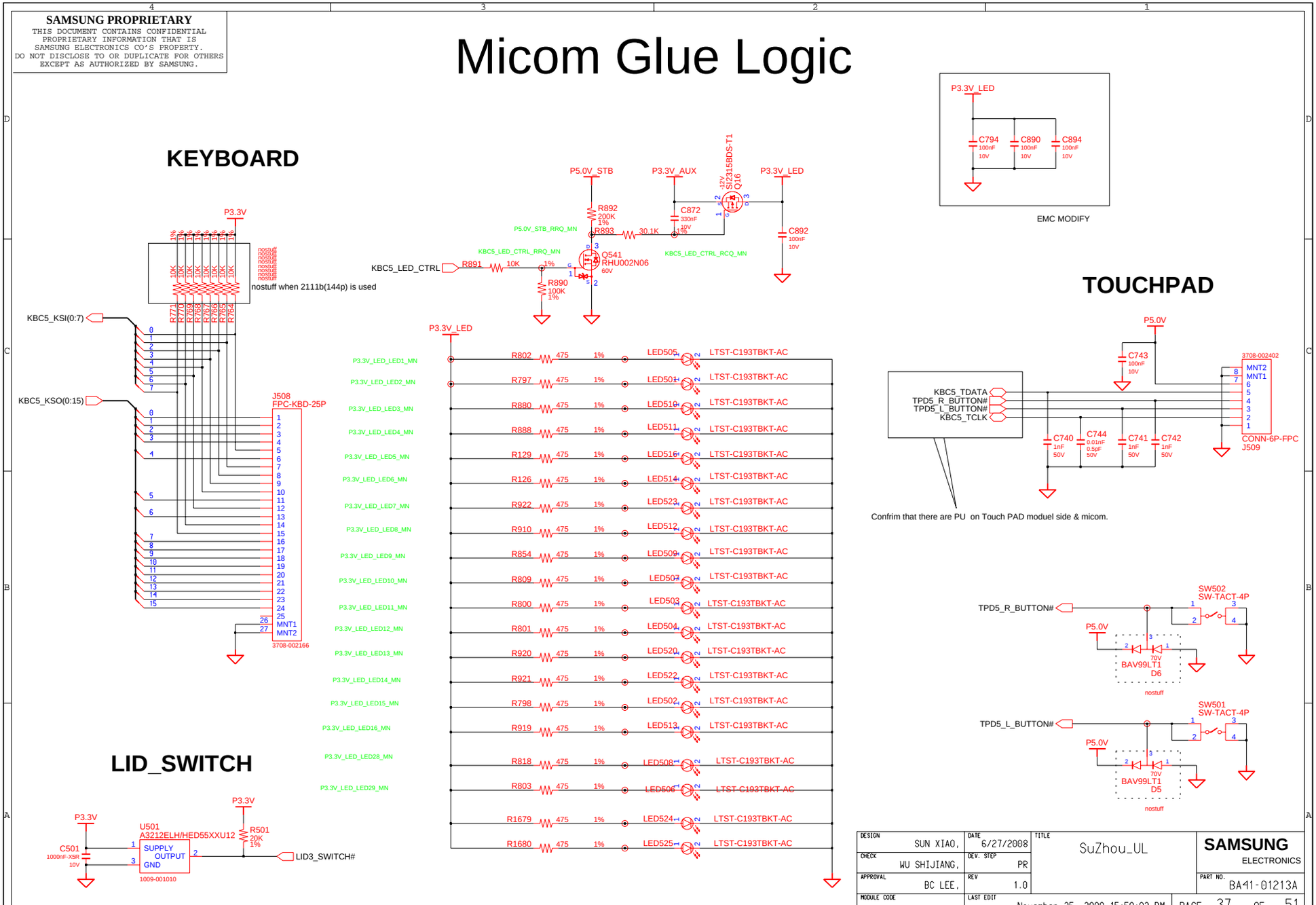

DESIGN: SUN XIAO,	DATE: 6/27/2008	TITLE: SuZhou_UL	SAMSUNG ELECTRONICS
CHECK: WU SHIJIANG,	DEV. STEP: PR		
APPROVAL: BC LEE,	REV: 1.0		PART NO. BA41-01213A
MODULE CODE	LAST EDIT: November 25, 2009 15:50:02 PM		PAGE 37 OF 51

SAMSUNG PROPRIETARY
THIS DOCUMENT CONTAINS CONFIDENTIAL PROPRIETARY INFORMATION THAT IS SAMSUNG ELECTRONICS CO'S PROPERTY. DO NOT DISCLOSE TO OR DUPLICATE FOR OTHERS EXCEPT AS AUTHORIZED BY SAMSUNG.

LED SWITCH LOGIC

Function Key LEDS

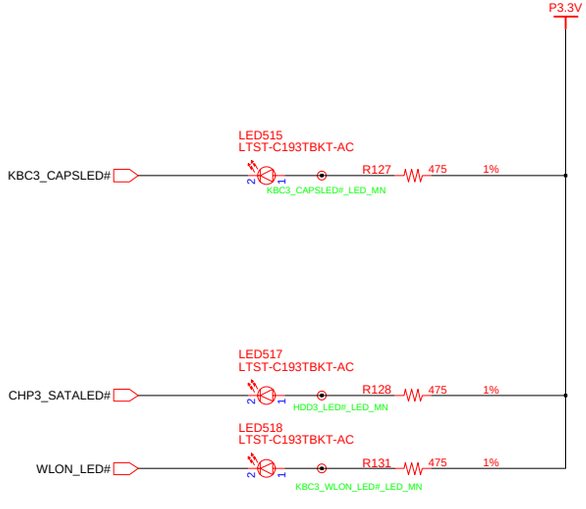

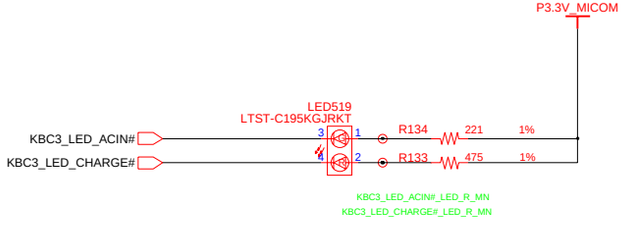

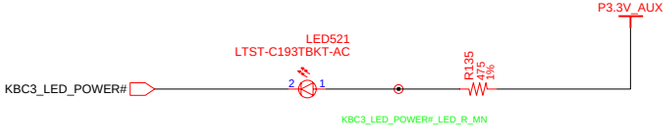

DRAW: SUN XIAO,	DATE: 8/12/2006	TITLE: SuZhou_UL LED_Switch LED_Switch	SAMSUNG ELECTRONICS
CHECK: WU SHIJIANG,	DEV. STEP: PR		
APPROVAL: BC LEE,	REV: 1.0		PART NO.: BA41-01213A
MODULE CODE	LAST EDIT: November 25, 2009 15:50:02 PM		PAGE 38 OF 51

SAMSUNG PROPRIETARY
THIS DOCUMENT CONTAINS CONFIDENTIAL PROPRIETARY INFORMATION THAT IS SAMSUNG ELECTRONICS CO'S PROPERTY. DO NOT DISCLOSE TO OR DUPLICATE FOR OTHERS EXCEPT AS AUTHORIZED BY SAMSUNG.

1/2 PORT USB CONNECTOR

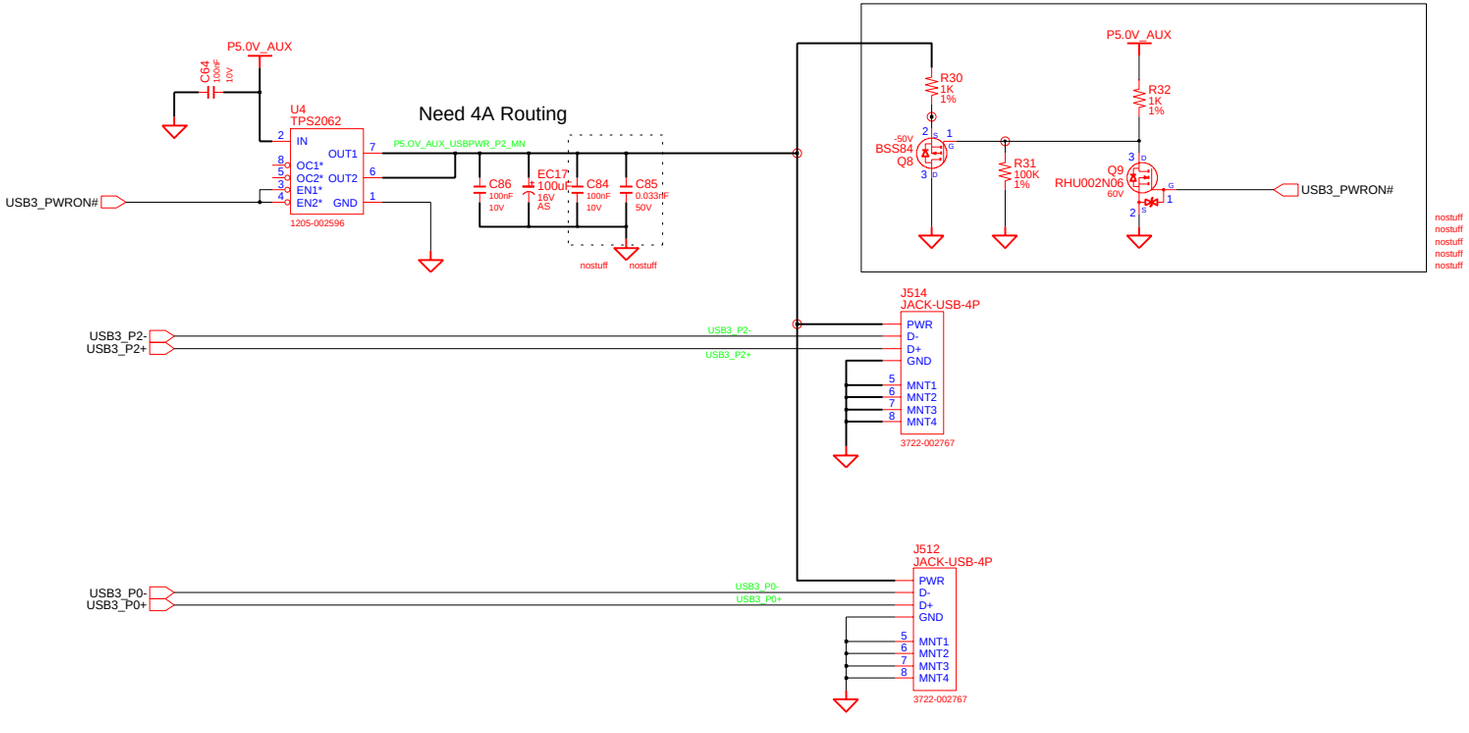

DESIGN: SUN XIAO,	DATE: 6/6/2008	TITLE: SuZhou_UL USB_CONN	SAMSUNG ELECTRONICS
CHECK: WU SHIJIANG,	DEV. STEP: PR		
APPROVAL: BC LEE,	REV: 1.0		PART NO. BA41-01213A
MODULE CODE	LAST EDIT: November 25, 2009 15:50:02 PM		PAGE 39 OF 51

SAMSUNG PROPRIETARY
THIS DOCUMENT CONTAINS CONFIDENTIAL PROPRIETARY INFORMATION THAT IS SAMSUNG ELECTRONICS CO'S PROPERTY. DO NOT DISCLOSE TO OR DUPLICATE FOR OTHERS EXCEPT AS AUTHORIZED BY SAMSUNG.

eSATA

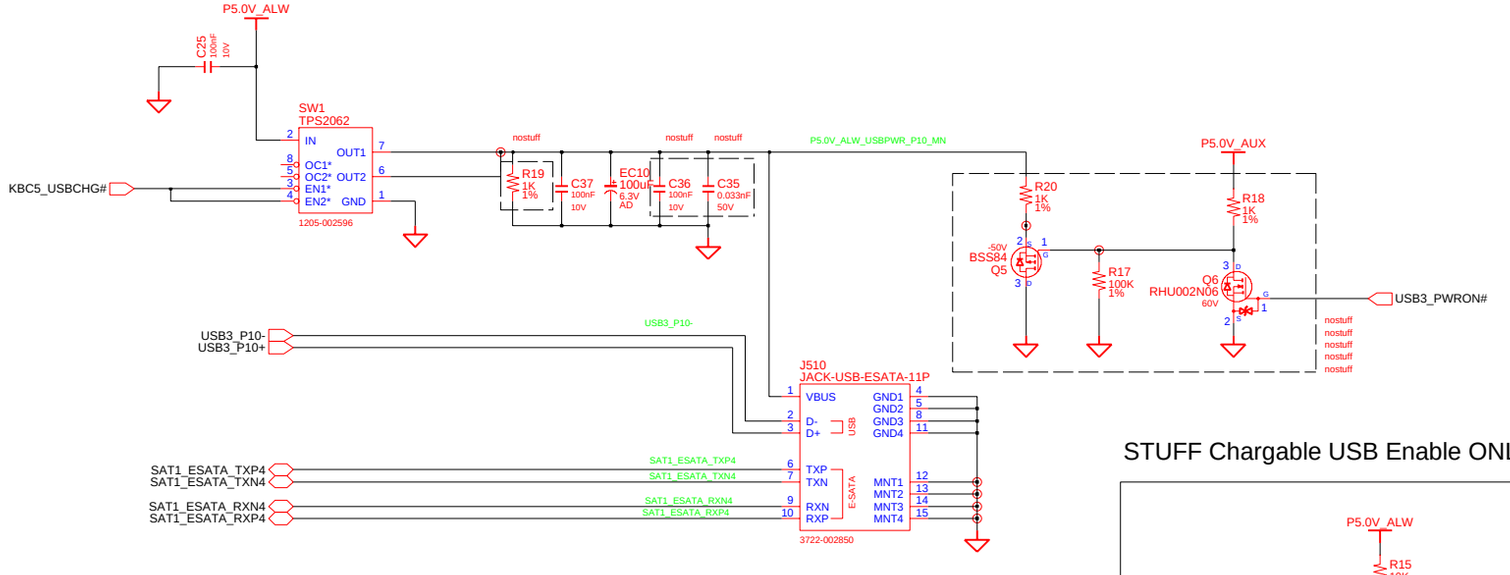

STUFF Chargable USB Enable ONLY

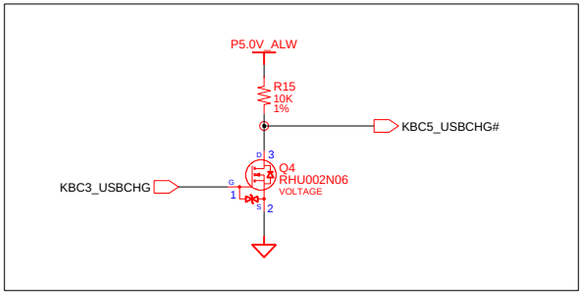

DESIGN: SUN XIAO,	DATE: 8/18/2009	TITLE: SuZhou_UL MAIN ESATA	SAMSUNG ELECTRONICS
CHECK: WU SHIJIANG,	DEV. STEP: PR		PART NO. BA41-01213A
APPROVAL: BC LEE,	REV: 1.0		
MODULE CODE	LAST EDIT: November 25, 2009 15:50:02 PM	PAGE 40 OF 51	

SAMSUNG PROPRIETARY
THIS DOCUMENT CONTAINS CONFIDENTIAL PROPRIETARY INFORMATION THAT IS SAMSUNG ELECTRONICS CO'S PROPERTY. DO NOT DISCLOSE TO OR DUPLICATE FOR OTHERS EXCEPT AS AUTHORIZED BY SAMSUNG.

MDC

MDC Connecter

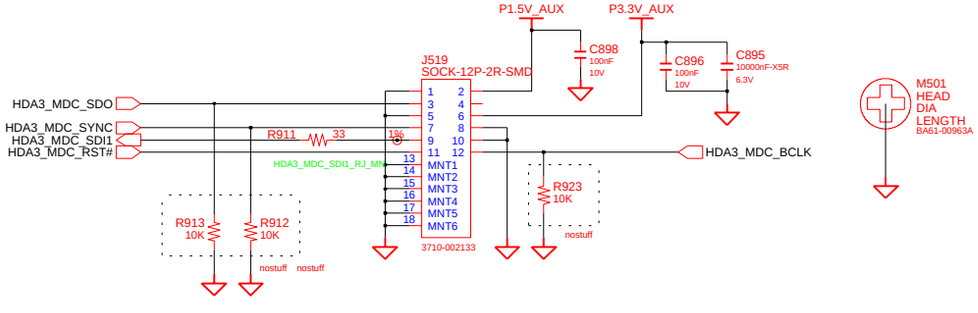

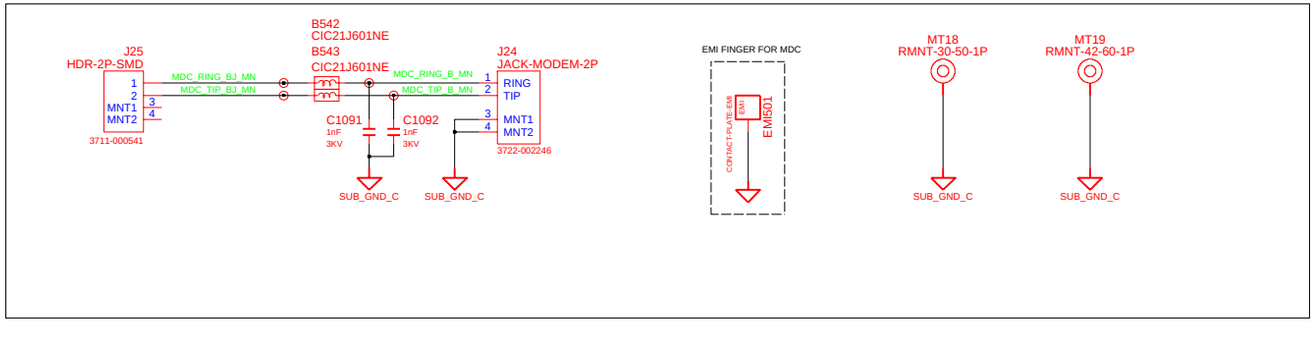

Factory Option

DESIGN: SUN XIAO,	DATE: 8/18/2009	TITLE: SuZhou_UL MAIN HDA_MODEM	SAMSUNG ELECTRONICS
CHECK: WU SHIJIANG,	DEV. STEP: PR		
APPROVAL: BC LEE,	REV: 1.0		PART NO. BA41-01213A
MODULE CODE	LAST EDIT: November 25, 2009 15:50:02 PM		PAGE 41 OF 51

SAMSUNG PROPRIETARY
THIS DOCUMENT CONTAINS CONFIDENTIAL
PROPRIETARY INFORMATION THAT IS
SAMSUNG ELECTRONICS CO'S PROPERTY.
DO NOT DISCLOSE TO OR DUPLICATE FOR OTHERS
EXCEPT AS AUTHORIZED BY SAMSUNG.

Bluetooth Interface

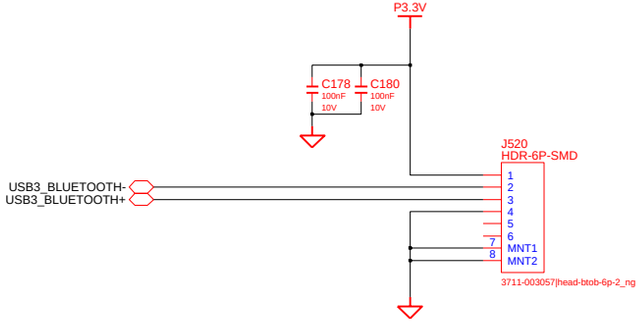

DESIGN: SUN XIAO,	DATE: 6/6/2008	TITLE: SuZhou_UL USB_DEVICES	SAMSUNG ELECTRONICS
CHECK: WU SHIJIANG,	DEV. STEP: PR		
APPROVAL: BC LEE,	REV: 1.0		PART NO. BA41-01213A
MODULE CODE	LAST EDIT: November 25, 2009 15:50:02 PM	PAGE 42 OF 51	

SAMSUNG PROPRIETARY
THIS DOCUMENT CONTAINS CONFIDENTIAL PROPRIETARY INFORMATION THAT IS SAMSUNG ELECTRONICS CO'S PROPERTY. DO NOT DISCLOSE TO OR DUPLICATE FOR OTHERS EXCEPT AS AUTHORIZED BY SAMSUNG.

CHARGER & POWER MANAGEMENT

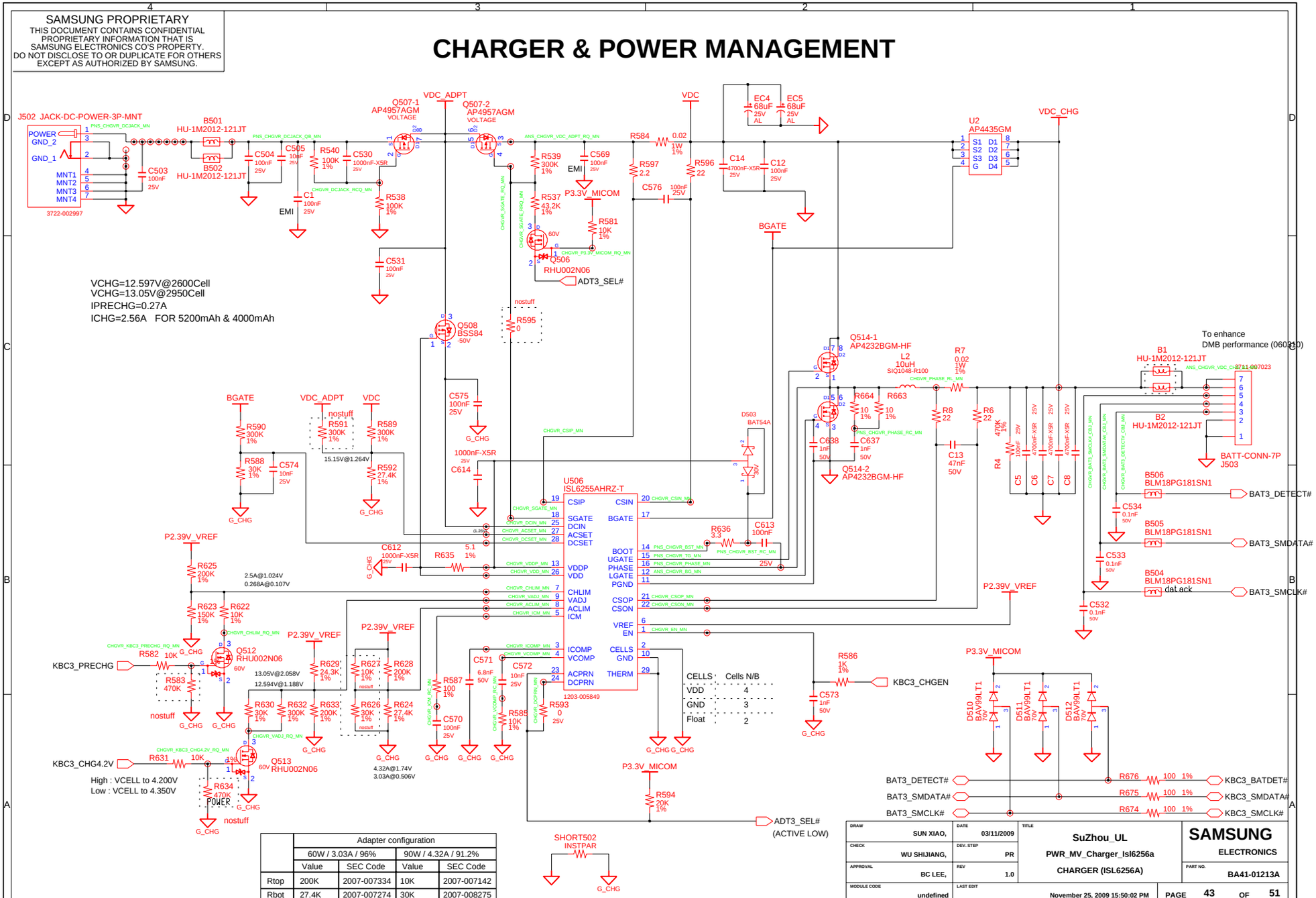

	Adapter configuration			
	60W / 3.03A / 96%		90W / 4.32A / 91.2%	
	Value	SEC Code	Value	SEC Code
Rtop	200K	2007-007334	10K	2007-007142
Rbot	27.4K	2007-007274	30K	2007-008275

DRAW: SUN XIAO,	DATE: 03/11/2009	TITLE: SuZhou_UL PWR_MV_Charger_Isl6256a CHARGER (ISL6256A)	SAMSUNG ELECTRONICS
CHECK: WU SHIJIANG,	DEV. STEP: PR		
APPROVAL: BC LEE,	REV: 1.0		PART NO.: BA41-01213A
MODULE CODE: undefined	LAST EDIT: November 25, 2009 15:50:02 PM		PAGE 43 OF 51

SAMSUNG PROPRIETARY
THIS DOCUMENT CONTAINS CONFIDENTIAL PROPRIETARY INFORMATION THAT IS SAMSUNG ELECTRONICS CO'S PROPERTY. DO NOT DISCLOSE TO OR DUPLICATE FOR OTHERS EXCEPT AS AUTHORIZED BY SAMSUNG.

P3.3V_AUX & P5.0V_AUX

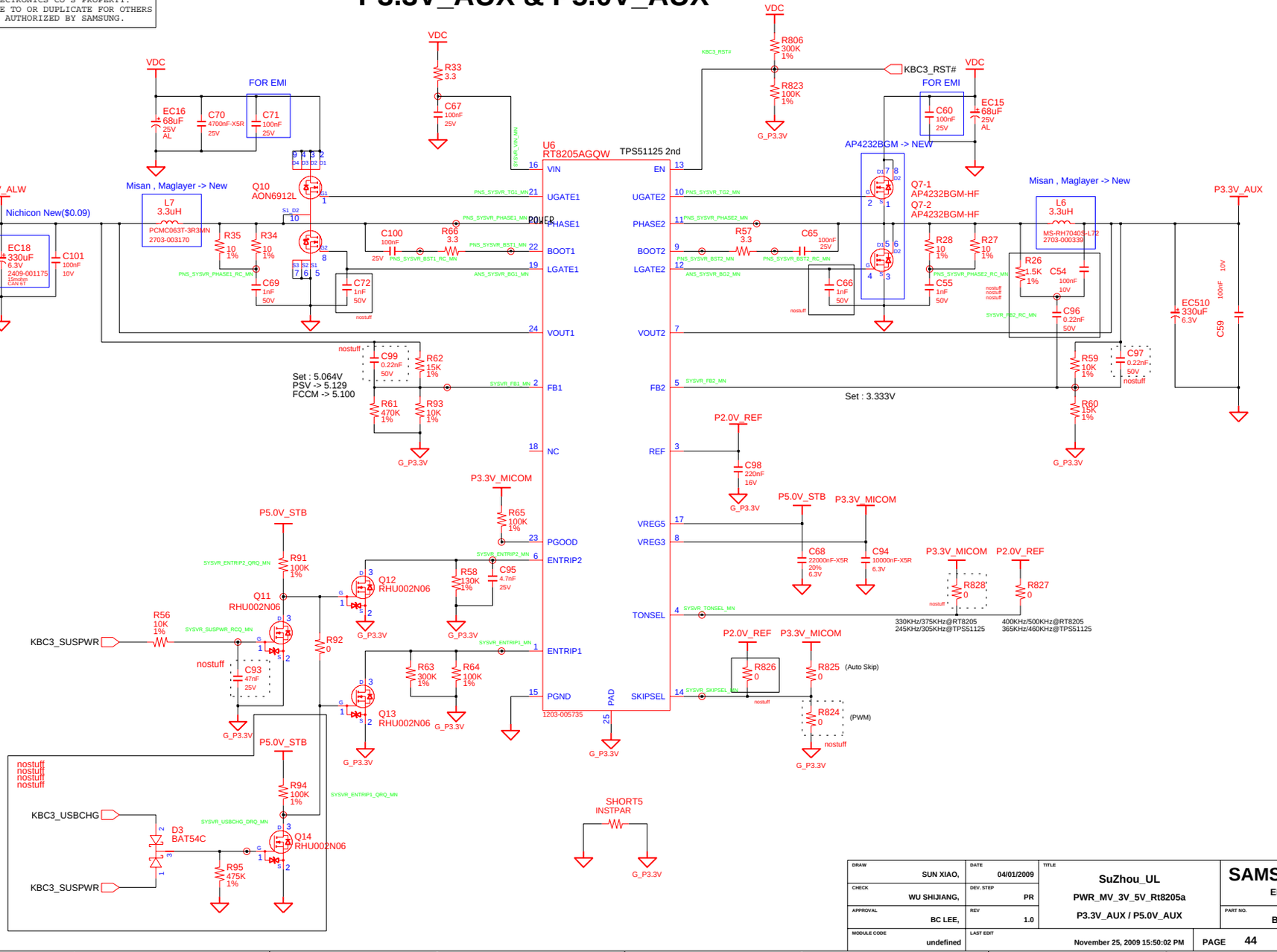

DRAW: SUN XIAO,	DATE: 04/01/2009	TITLE: SuZhou_UL PWR_MV_3V_5V_Rt8205a P3.3V_AUX / P5.0V_AUX	SAMSUNG ELECTRONICS
CHECK: WU SHIJIANG,	DEV. STEP: PR		
APPROVAL: BC LEE,	REV: 1.0		PART NO. BA41-01213A
MODULE CODE: undefined	LAST EDIT: November 25, 2009 15:50:02 PM		PAGE 44 OF 51

SAMSUNG PROPRIETARY
THIS DOCUMENT CONTAINS CONFIDENTIAL PROPRIETARY INFORMATION THAT IS SAMSUNG ELECTRONICS CO'S PROPERTY. DO NOT DISCLOSE TO OR DUPLICATE FOR OTHERS EXCEPT AS AUTHORIZED BY SAMSUNG.

DDR3 Power

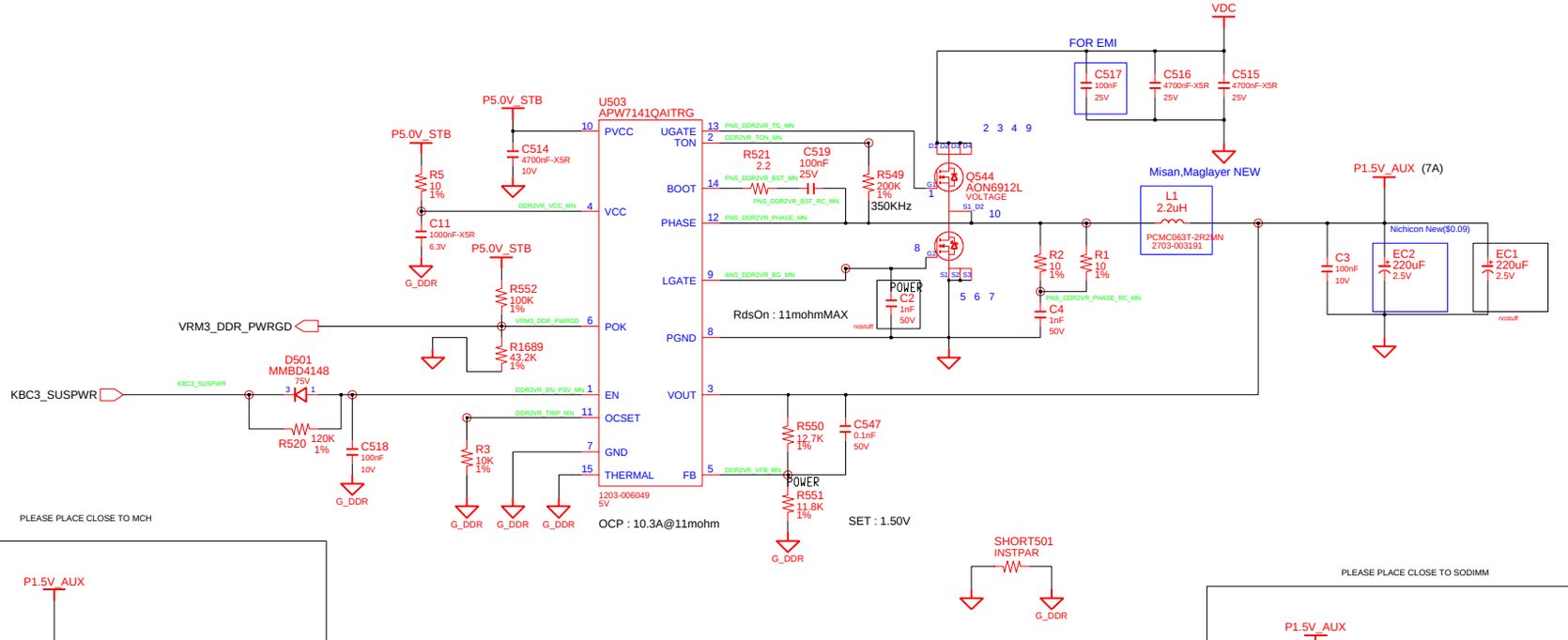

PLEASE PLACE CLOSE TO MCH

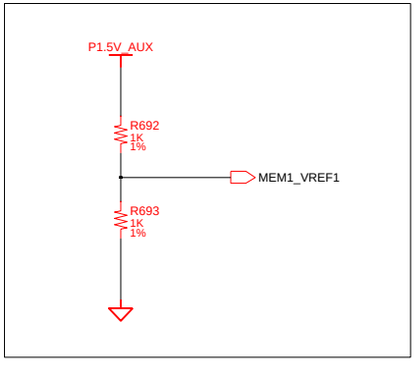

PLEASE PLACE CLOSE TO SODIMM

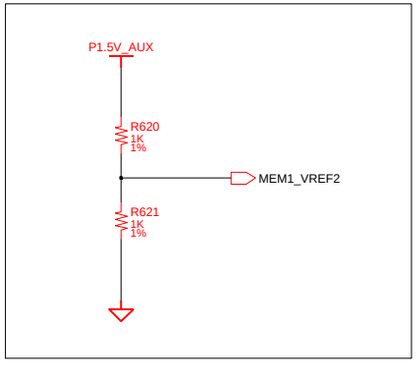

DDR3 VTT(0.75V)

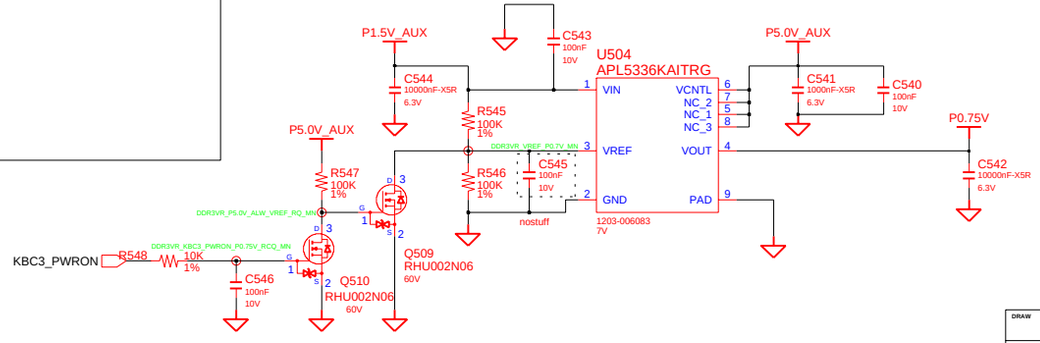

DRAW: SUN XIAO,	DATE: 03/13/2009	TITLE: SuZhou_UL PWR_MV_Memory_Rt8207 DDR3 POWER (P1.5V_AUX)	SAMSUNG ELECTRONICS
CHECK: WU SHIJIANG,	DEV. STEP: PR		
APPROVAL: BC LEE,	REV: 1.0		PART NO. BA41-01213A
MODULE CODE: undefined	LAST EDIT: November 25, 2009 15:50:02 PM		PAGE 45 OF 51

SAMSUNG PROPRIETARY
THIS DOCUMENT CONTAINS CONFIDENTIAL PROPRIETARY INFORMATION THAT IS SAMSUNG ELECTRONICS CO'S PROPERTY. DO NOT DISCLOSE TO OR DUPLICATE FOR OTHERS EXCEPT AS AUTHORIZED BY SAMSUNG.

CHIPSET POWER (P1.05V)

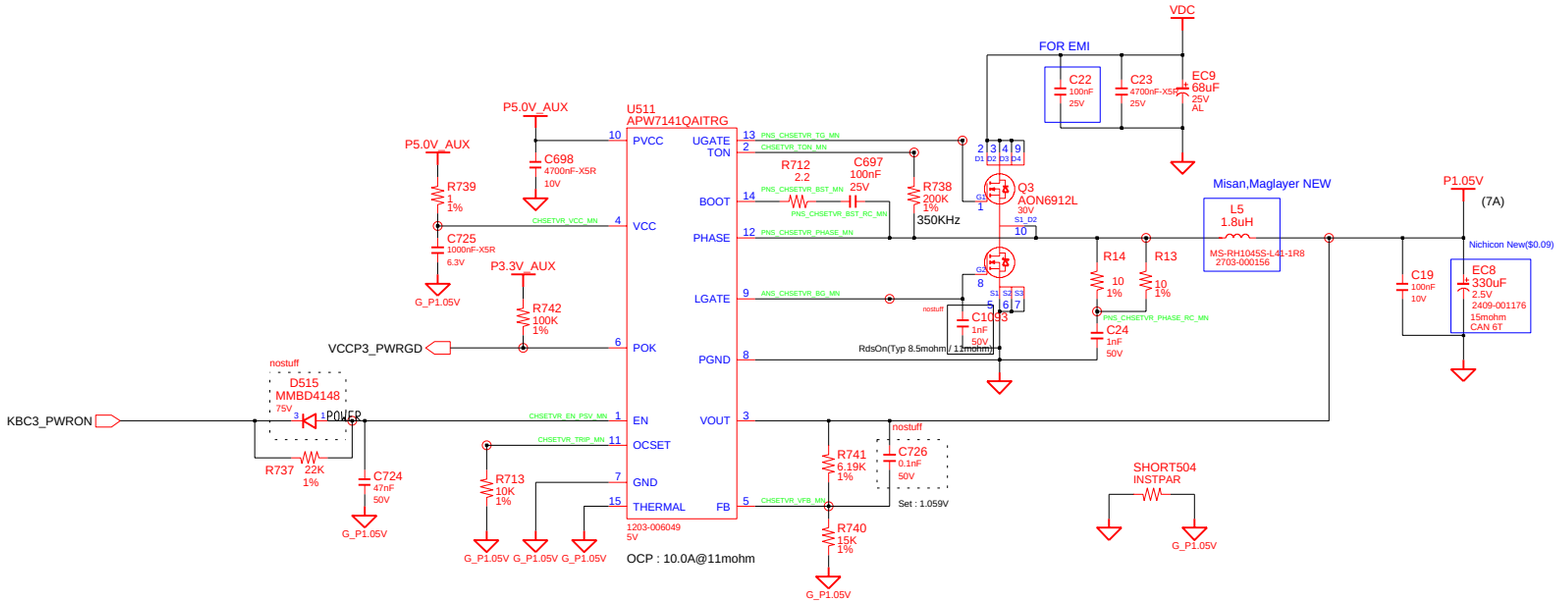

P1.8V_AUX(LDO)

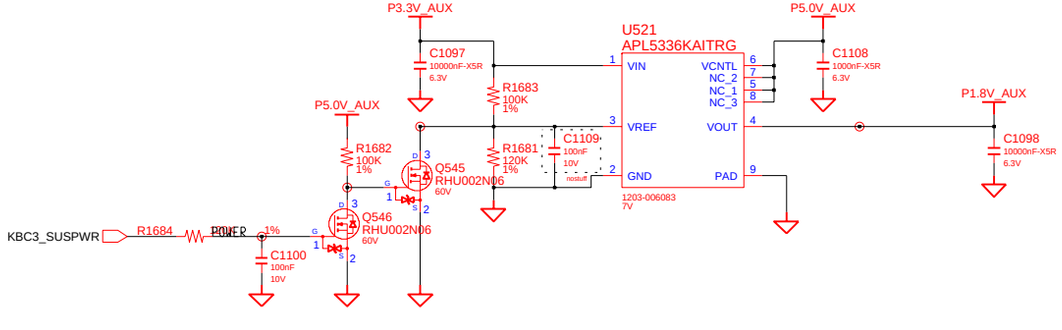

DRAW: SUN XIAO,	DATE: 03/11/2009	TITLE: SuZhou_UL PWR_MV_Cantiga Chipset Power (P1.05V_M,P1.2V)	SAMSUNG ELECTRONICS
CHECK: WU SHIJIANG,	DEV. STEP: PR		
APPROVAL: BC LEE,	REV: 1.0		PART NO. BA41-01213A
MODULE CODE: undefined	LAST EDIT: November 25, 2009 15:50:02 PM	PAGE 46 OF 51	

SAMSUNG PROPRIETARY
THIS DOCUMENT CONTAINS CONFIDENTIAL PROPRIETARY INFORMATION THAT IS SAMSUNG ELECTRONICS CO'S PROPERTY. DO NOT DISCLOSE TO OR DUPLICATE FOR OTHERS EXCEPT AS AUTHORIZED BY SAMSUNG.

CPU VRM [TI IMVP6+]

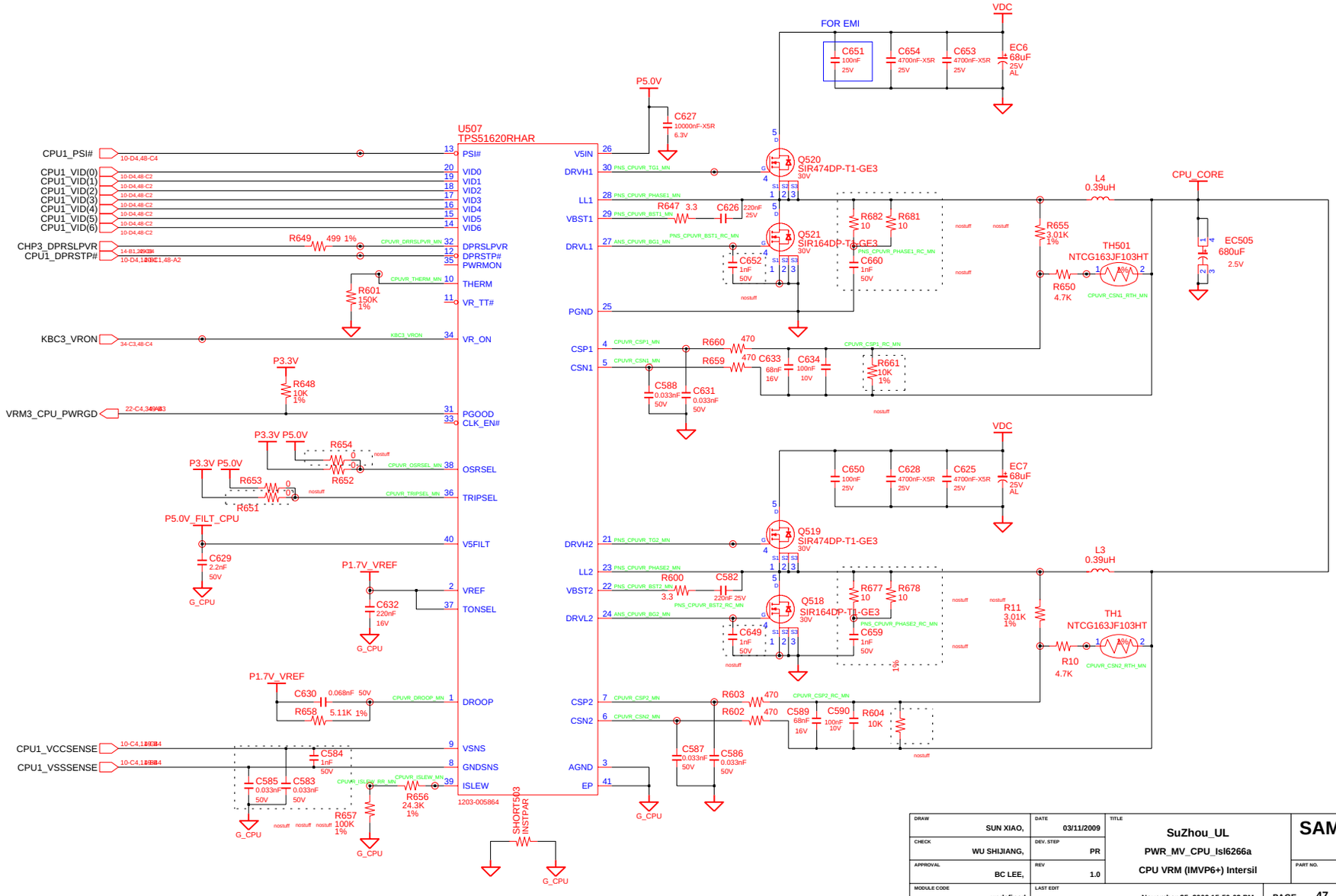

DRAW: SUN XIAO,	DATE: 03/11/2009	TITLE: SuZhou_UL PWR_MV_CPU_Isl6266a CPU VRM (IMVP6+) Intersil	SAMSUNG ELECTRONICS
CHECK: WU SHIJIANG,	DEV. STEP: PR		
APPROVAL: BC LEE,	REV: 1.0		PART NO.: BA41-01213A
MODULE CODE: undefined	LAST EDIT: November 25, 2009 15:50:02 PM		PAGE 47 OF 51

SAMSUNG PROPRIETARY
THIS DOCUMENT CONTAINS CONFIDENTIAL PROPRIETARY INFORMATION THAT IS SAMSUNG ELECTRONICS CO'S PROPERTY. DO NOT DISCLOSE TO OR DUPLICATE FOR OTHERS EXCEPT AS AUTHORIZED BY SAMSUNG.

Switched Power

Switched Power On (P3.3V)

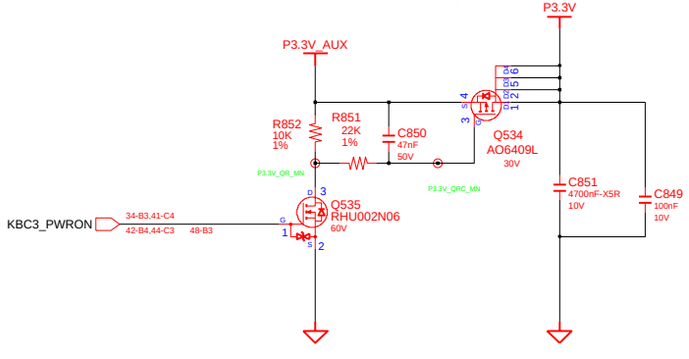

Switched Power On (P5.0V)

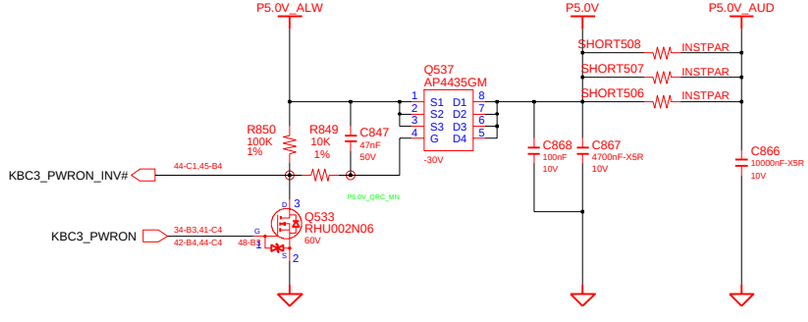

Switched Power On (P1.5V)

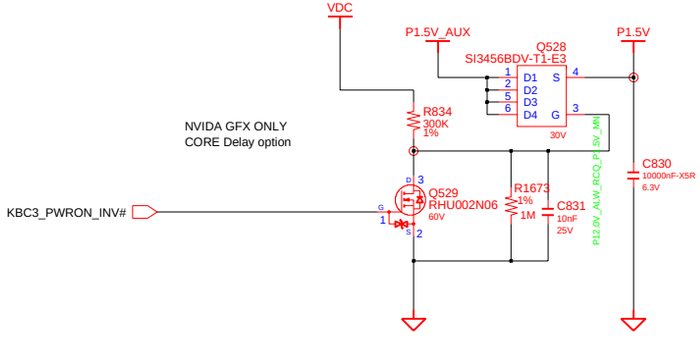

Sleep'n Charger

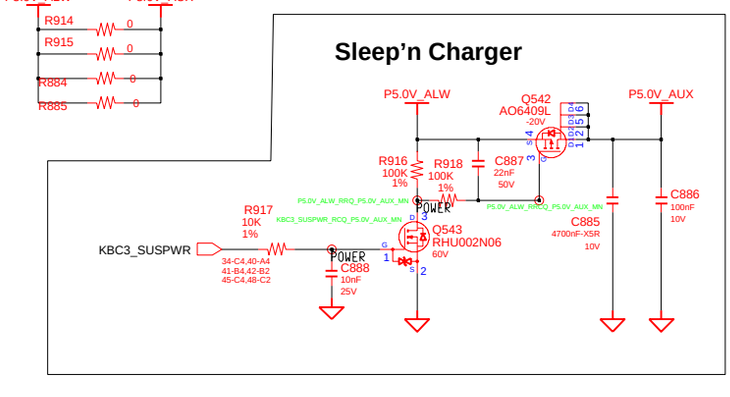

nostuff
nostuff
nostuff
nostuff
nostuff
nostuff
nostuff
nostuff
nostuff
nostuff

DRAW: SUN XIAO,	DATE: 03/11/2009	TITLE: SuZhou_UL	SAMSUNG ELECTRONICS
CHECK: WU SHIJIANG,	DEV. STEP: PR	PWR_MV_Switched	
APPROVAL: BC LEE,	REV: 1.0	SWITCHED POWER	PART NO. BA41-01213A
MODULE CODE	LAST EDIT: November 25, 2009 15:50:02 PM		PAGE 48 OF 51

SAMSUNG PROPRIETARY
THIS DOCUMENT CONTAINS CONFIDENTIAL PROPRIETARY INFORMATION THAT IS SAMSUNG ELECTRONICS CO'S PROPERTY. DO NOT DISCLOSE TO OR DUPLICATE FOR OTHERS EXCEPT AS AUTHORIZED BY SAMSUNG.

POWER DISCHARGER

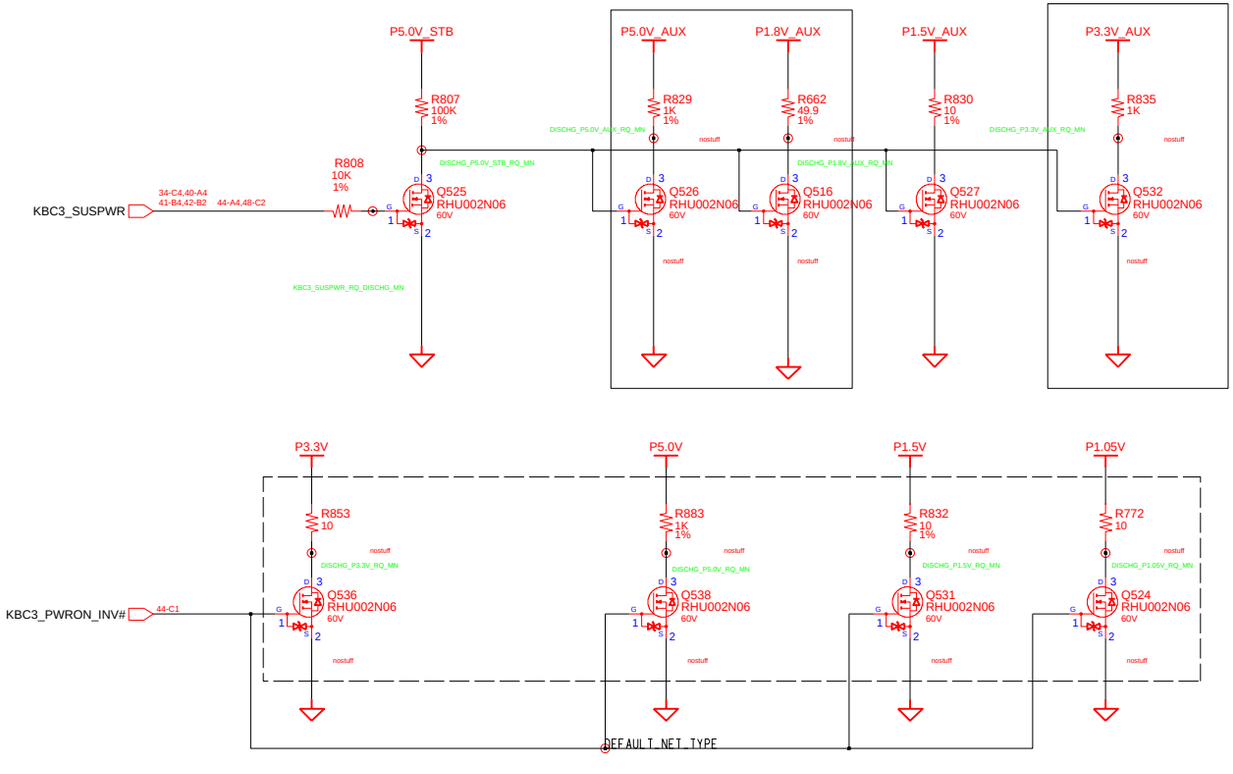

DRAW: SUN XIAO,	DATE: 03/11/2009	TITLE: SuZhou_UL PWR_MV_DisCharger DISCHARGING LOGIC	SAMSUNG ELECTRONICS
CHECK: WU SHIJIANG,	DEV. STEP: PR		
APPROVAL: BC LEE,	REV: 1.0		PART NO. BA41-01213A
MODULE CODE: undefined	LAST EDIT: November 25, 2009 15:50:02 PM		PAGE 49 OF 51

SAMSUNG PROPRIETARY
THIS DOCUMENT CONTAINS CONFIDENTIAL PROPRIETARY INFORMATION THAT IS SAMSUNG ELECTRONICS CO'S PROPERTY. DO NOT DISCLOSE TO OR DUPLICATE FOR OTHERS EXCEPT AS AUTHORIZED BY SAMSUNG.

Main Borad

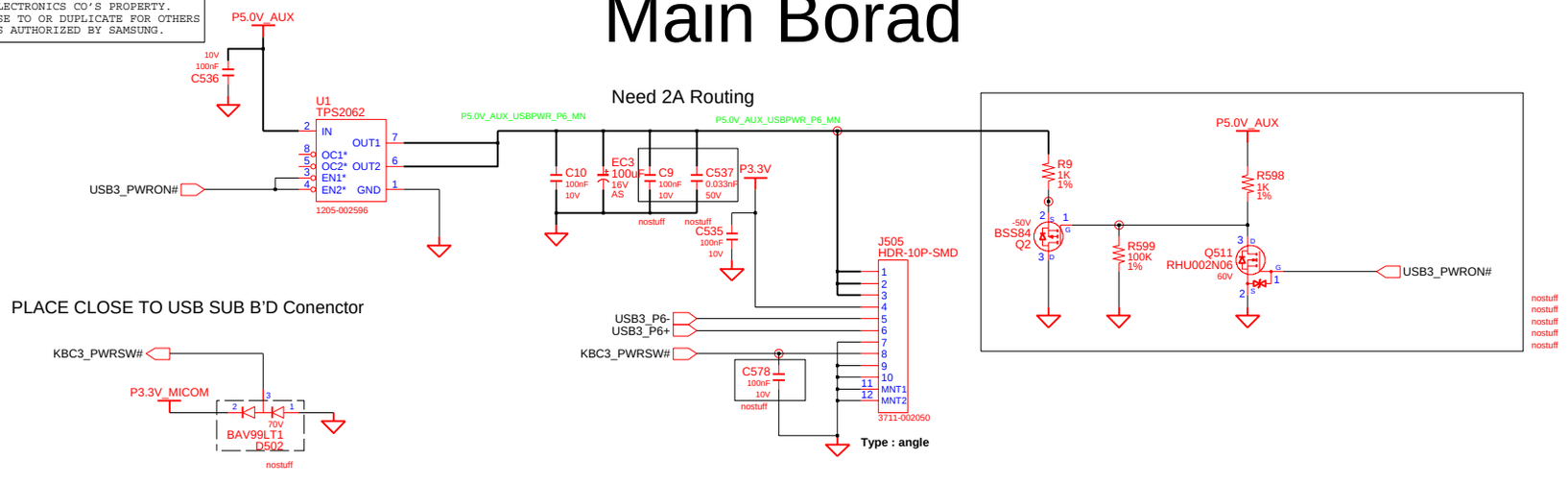

SUB Borad

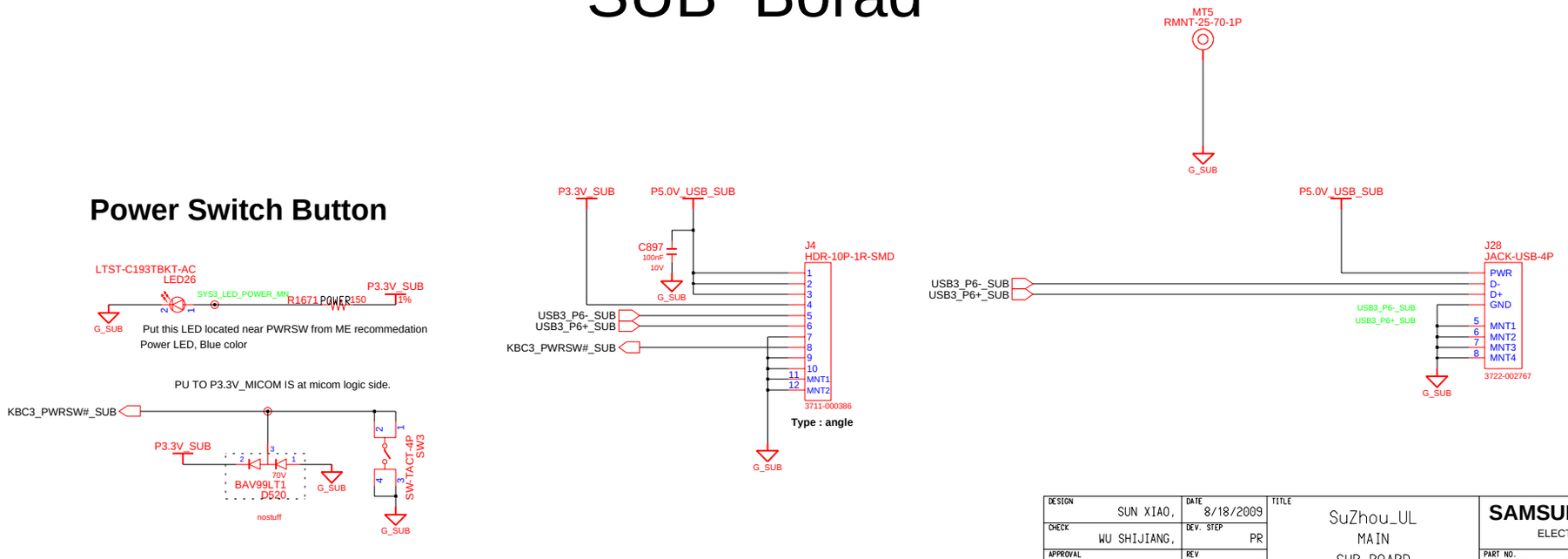

DESIGN: SUN XIAO,	DATE: 8/18/2009	TITLE: SuZhou_UL MAIN SUB BOARD	SAMSUNG ELECTRONICS
CHECK: WU SHIJIANG,	DEV. STEP: PR		
APPROVAL: BC LEE,	REV: 1.0		PART NO. BA41-01213A
MODULE CODE	LAST EDIT: November 25, 2009 15:50:02 PM		PAGE 50 OF 51

SAMSUNG PROPRIETARY
THIS DOCUMENT CONTAINS CONFIDENTIAL PROPRIETARY INFORMATION THAT IS SAMSUNG ELECTRONICS CO'S PROPERTY. DO NOT DISCLOSE TO OR DUPLICATE FOR OTHERS EXCEPT AS AUTHORIZED BY SAMSUNG.

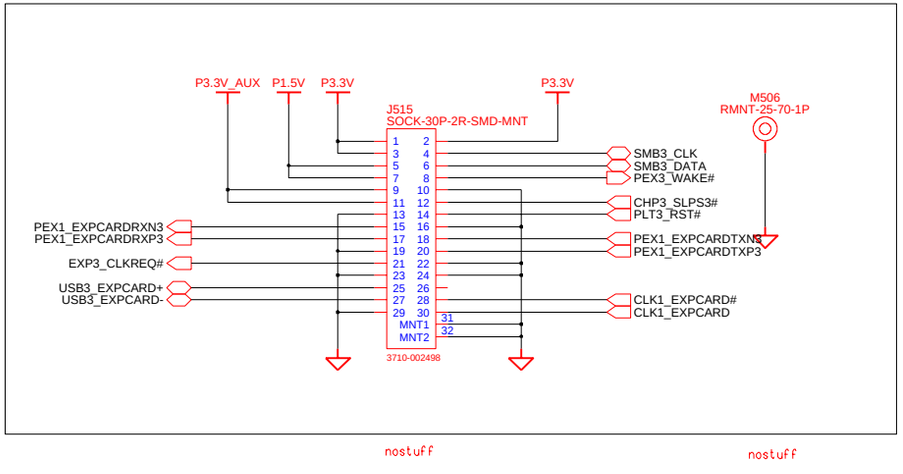

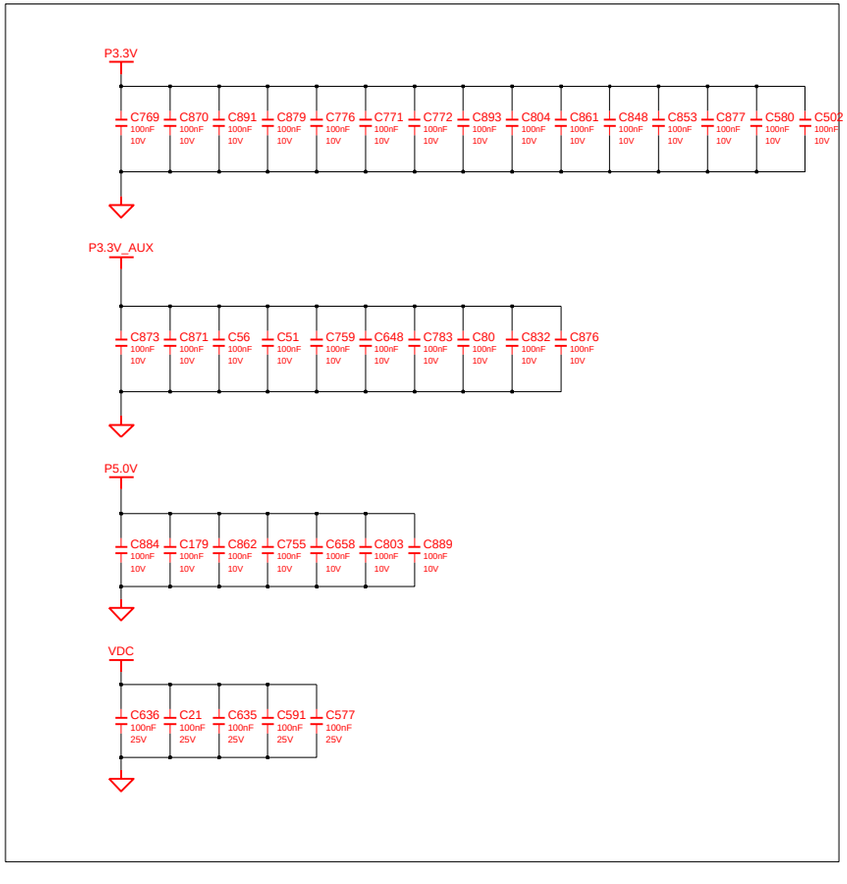

EMC MODIFY

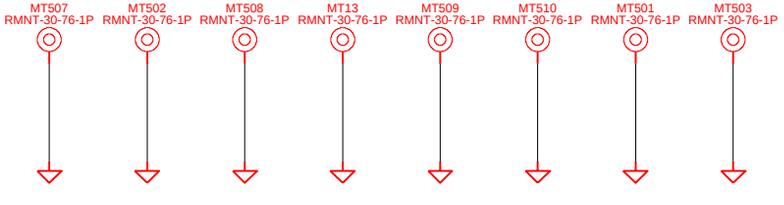

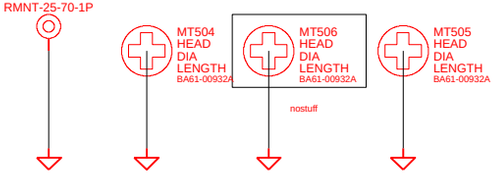

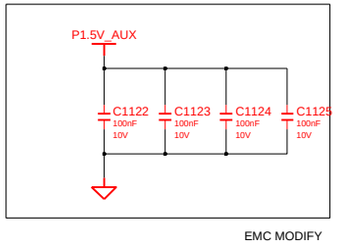

EMC MODIFY

DESIGN: SUN XIAO,	DATE: 9/9/2009	TITLE: SuZhou_UL MAIN EXPRESS CARD	SAMSUNG ELECTRONICS
CHECK: WU SHIJIANG,	DEV. STEP: PR		
APPROVAL: BC LEE,	REV: 1.0		PART NO. BA41-01213A
MODULE CODE	LAST EDIT: November 25, 2009 15:50:02 PM		PAGE 51 OF 51