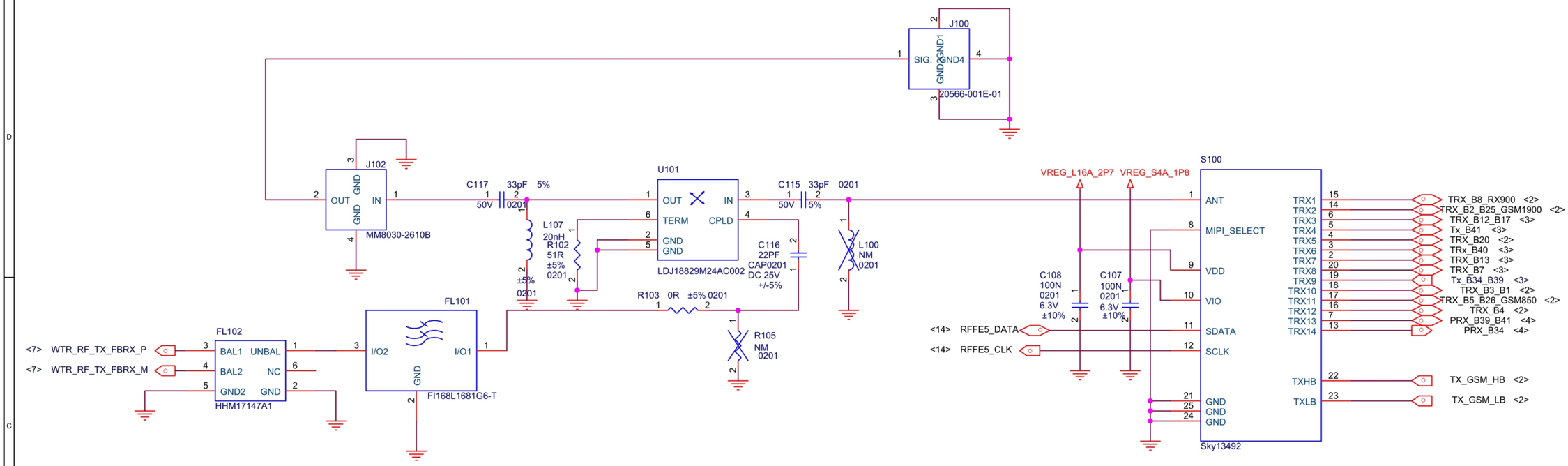

PRIMARY SWITCH(SP16T) LOGIC

Antenna Path	Bit[7]	Bit[6]	Bit[5]	Bit[4]	Bit[3]	Bit[2]	Bit[1]	Bit[0]
Sleep mode (standby)	X	0	0	0	0	0	0	0
2G transmit low band	X	0	0	0	1	0	1	0
2G transmit high band	X	0	0	0	1	0	0	0
TRX1	X	0	0	0	0	1	0	0
TRX2	X	0	0	0	0	1	0	1
TRX3	X	0	0	0	0	1	1	0
TRX4	X	0	0	0	0	1	1	1
TRX5	X	0	0	0	1	0	0	1
TRX6	X	0	0	0	1	0	1	1
TRX7	X	0	0	0	1	1	0	0
TRX8	X	0	0	0	0	0	0	1
TRX9	X	0	0	0	0	0	1	0
TRX10	X	0	0	0	0	0	1	1
TRX11	X	0	0	0	1	1	0	1
TRX12	X	0	0	0	1	1	1	0
TRX13	X	0	0	1	0	0	0	0
TRX14	X	0	0	1	0	0	0	1
Isolation mode (warm–up)	X	1	1	1	1	1	1	1

CXM3593

CTL 1	CTL 2	Active path
L	H	RF1-RF4 RF2-RF3
H	L	RF1-RF3 RF2-RF4

Primary Ant Connector, Coupler and Primary Switchplexer

Title	B7	
Size A3	Document Number ANT CON&COUPLER&SWITCHPL	Rev P0
Date: Wednesday, August 17, 2016	Sheet 1 of 35	

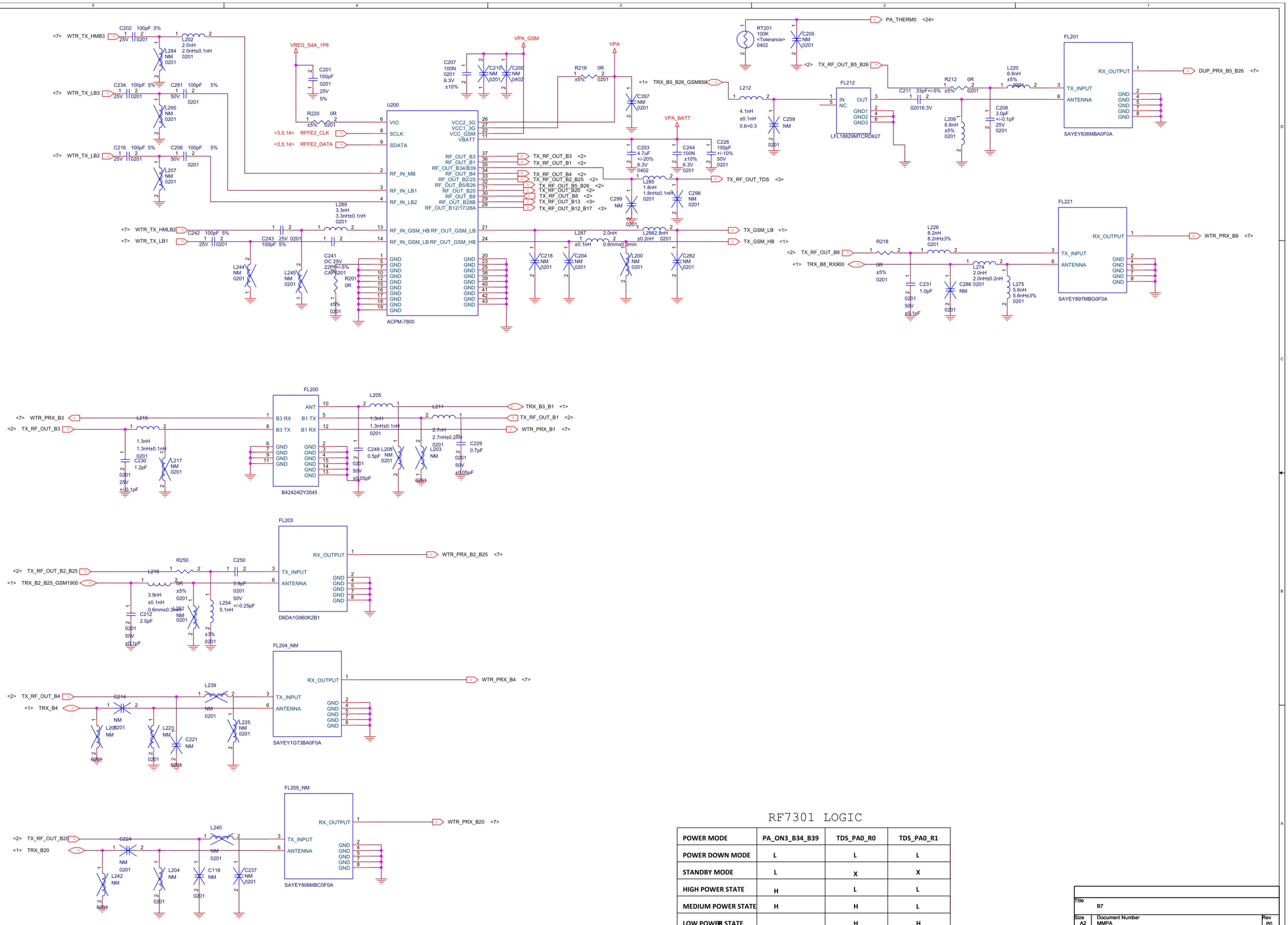

RF7301 LOGIC

POWER MODE	PA_ON3_B34_B39	TDS_PA0_R0	TDS_PA0_R1
POWER DOWN MODE	L	L	L
STANDBY MODE	L	X	X
HIGH POWER STATE	H	L	L
MEDIUM POWER STATE	H	H	L
LOW POWER STATE		H	H

Title	B7	
Size A2	Document Number MMPA	Rev P0
Date: Wednesday, August 17, 2016	Sheet 2 of 35	

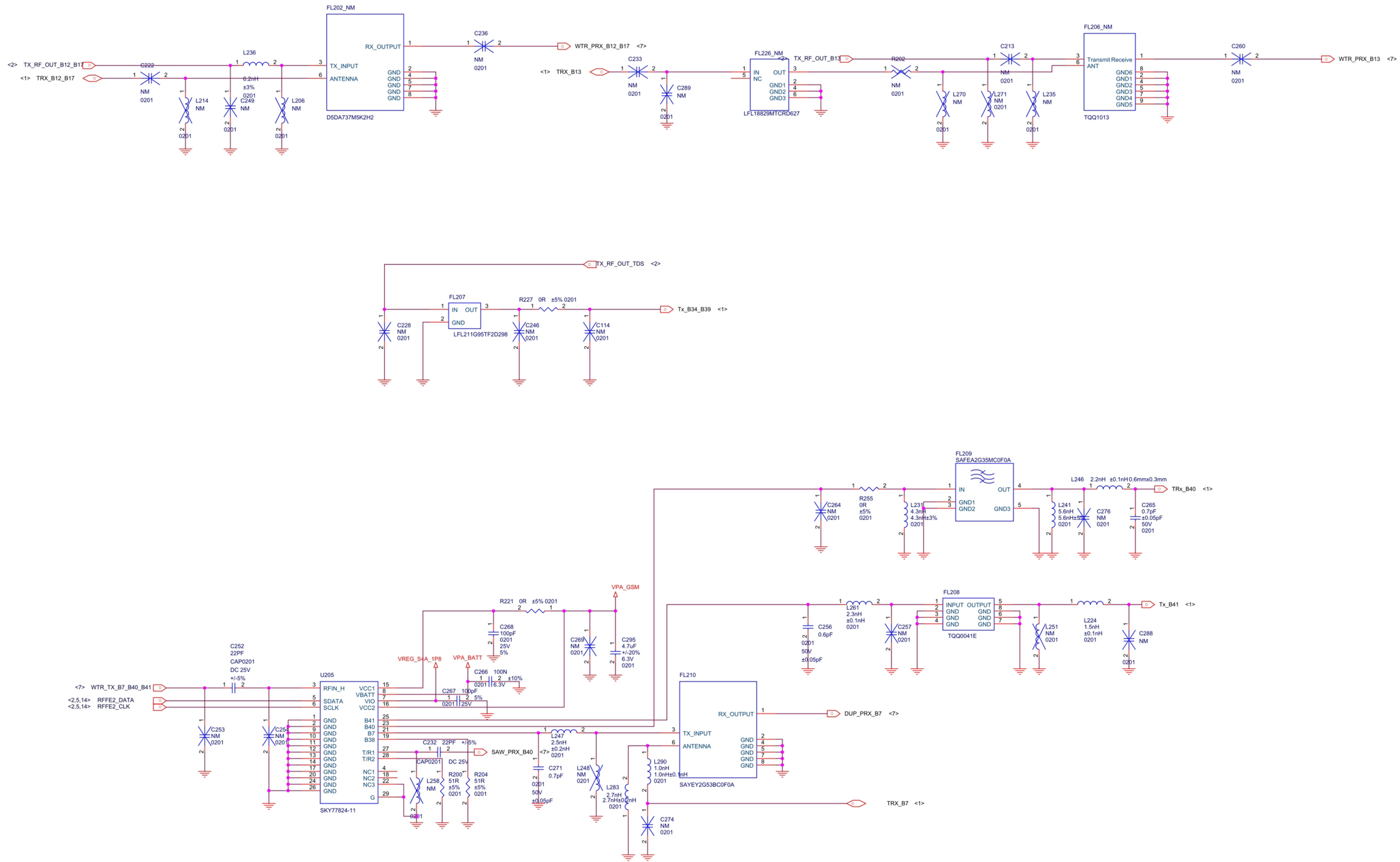

RF7301 LOGIC

POWER MODE	PA_ON3_B34_B39	TDS_PA0_R0	TDS_PA0_R1
POWER DOWN MODE	L	L	L
STANDBY MODE	L	X	X
HIGH POWER STATE	H	L	L
MEDIUM POWER STATE	H	H	L
LOW POWER STATE		H	H

Title	B7	
Size A2	Document Number BAND34&39&7	Rev P0
Date: Wednesday, August 17, 2016	Sheet 3 of 35	

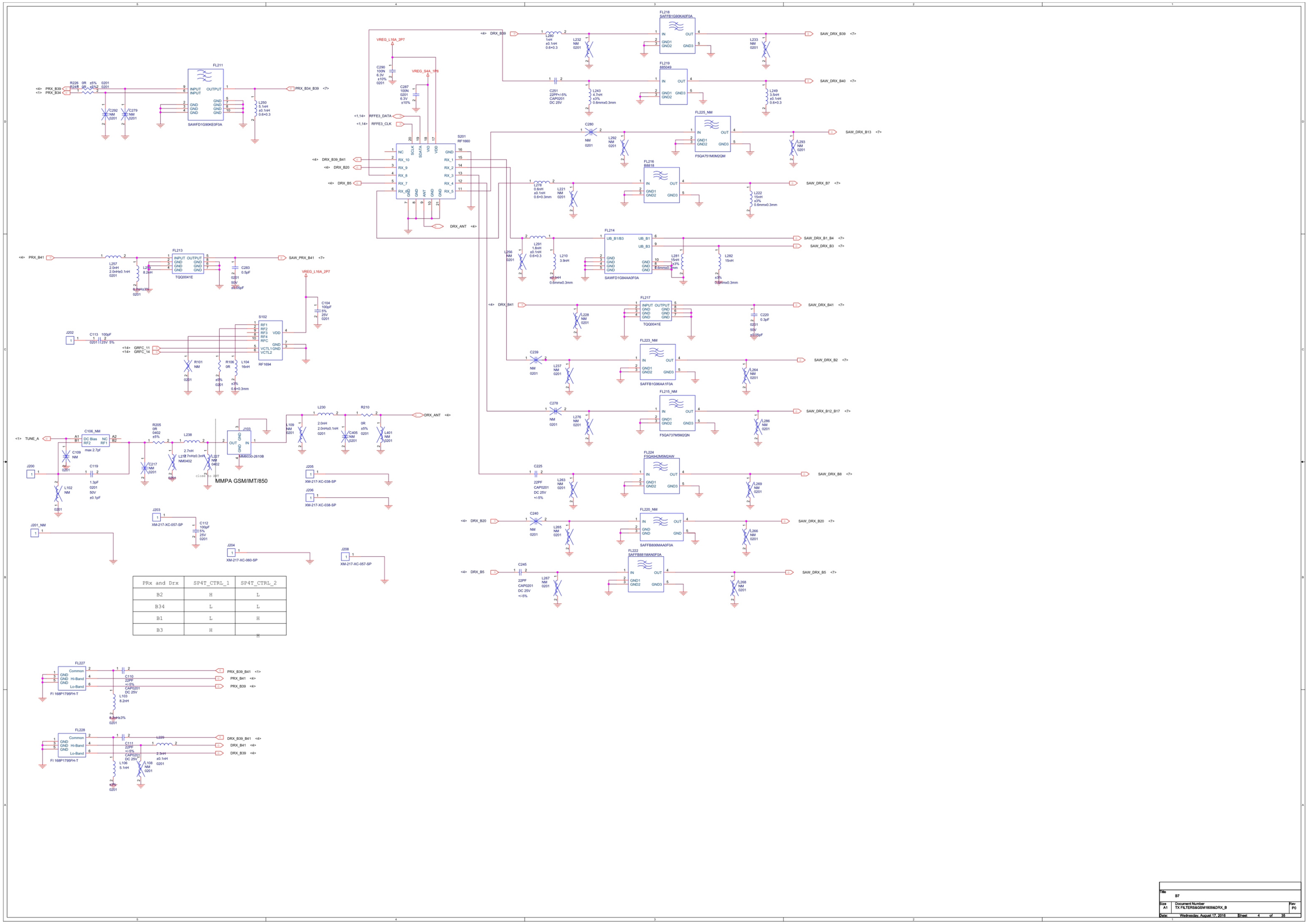

PRx and Drx	SP4T_CTRL_1	SP4T_CTRL_2
B2	H	L
B34	L	L
B1	L	H
B3	H	H

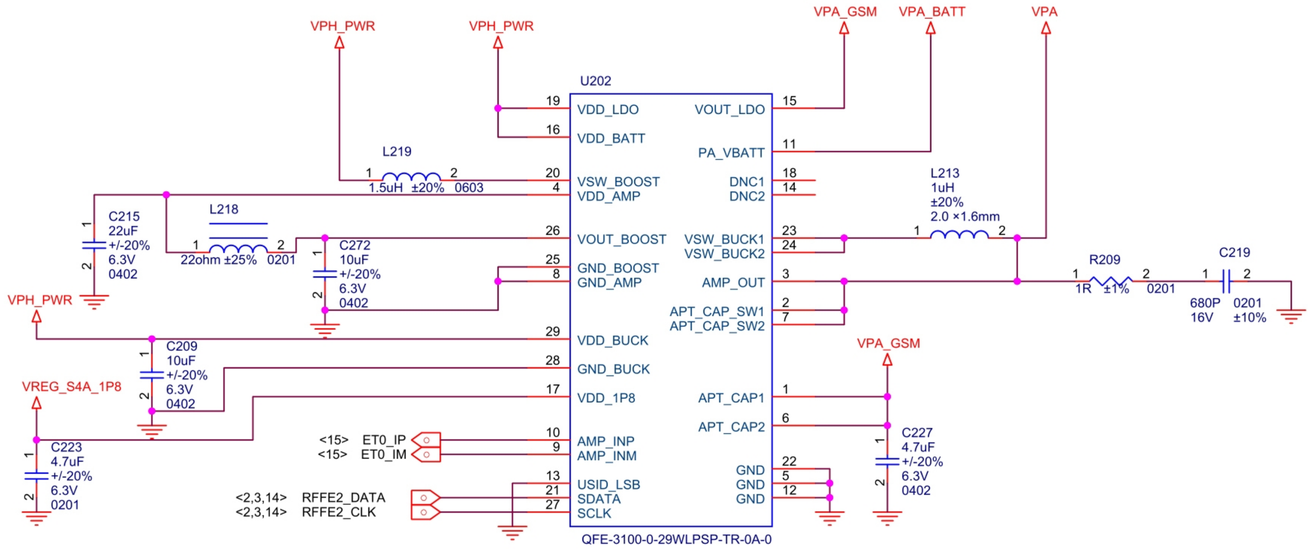

QFE3100

Title	B7	
Size A3	Document Number QFE3100	Rev P0
Date: Wednesday, August 17, 2016	Sheet 5 of 35	

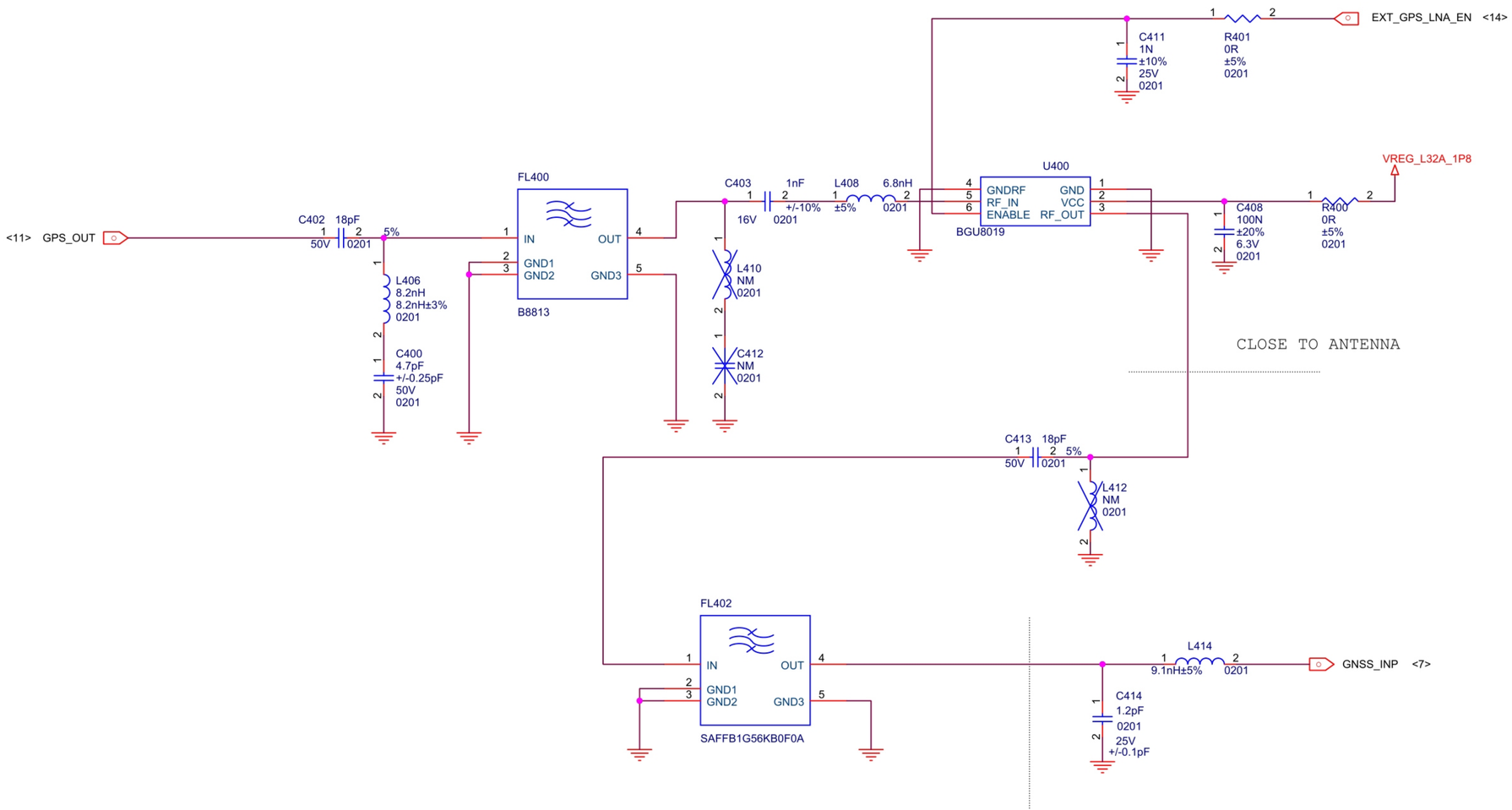

GPS

Title	B7	
Size A3	Document Number GPS	Rev P0
Date: Wednesday, August 17, 2016	Sheet 6 of 35	

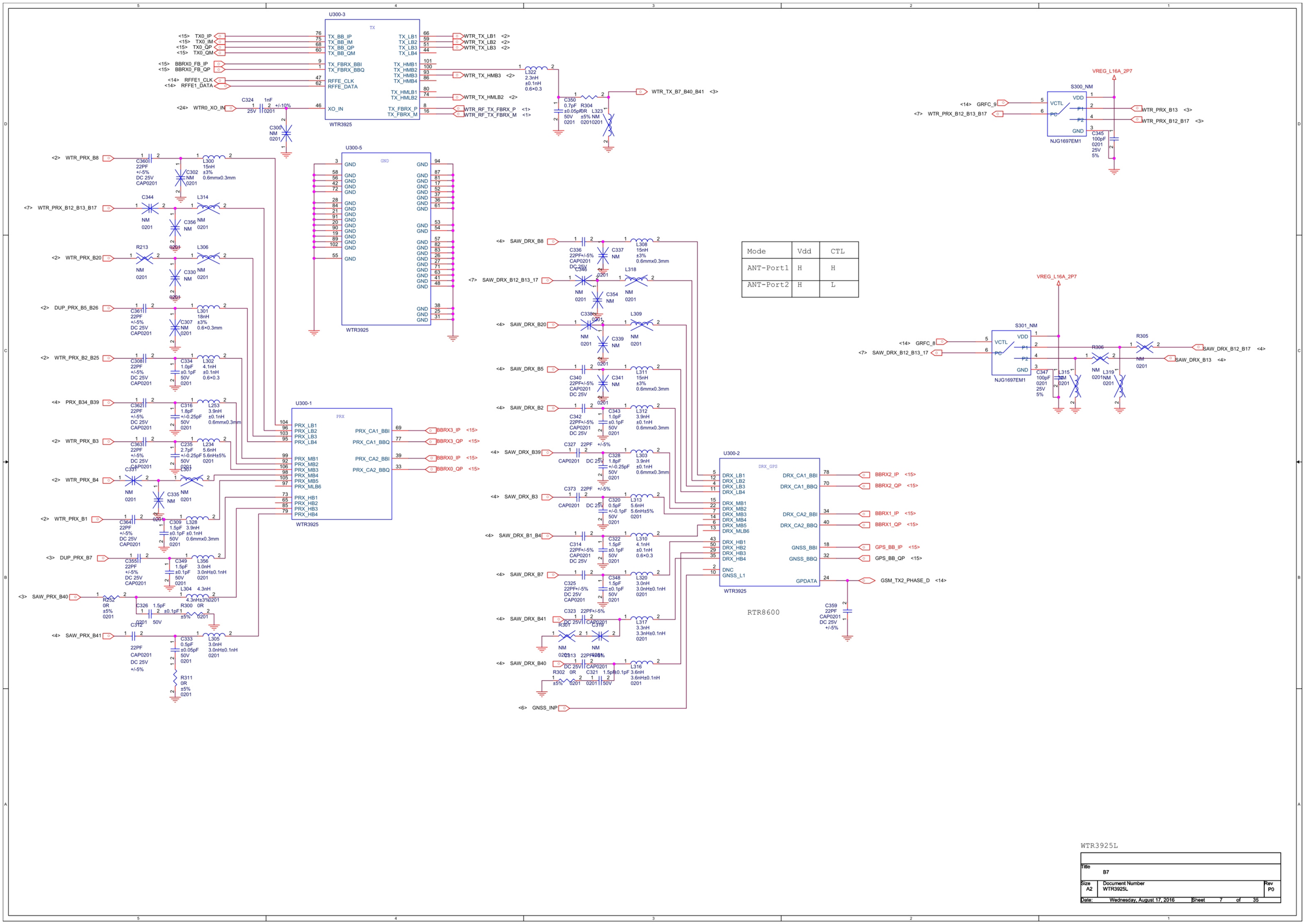

Mode	Vdd	CTL
ANT-Port1	H	H
ANT-Port2	H	L

WTR3925L

Title	B7
Size A2	Document Number WTR3925L
Rev	P0
Date: Wednesday, August 17, 2016	Sheet 7 of 35

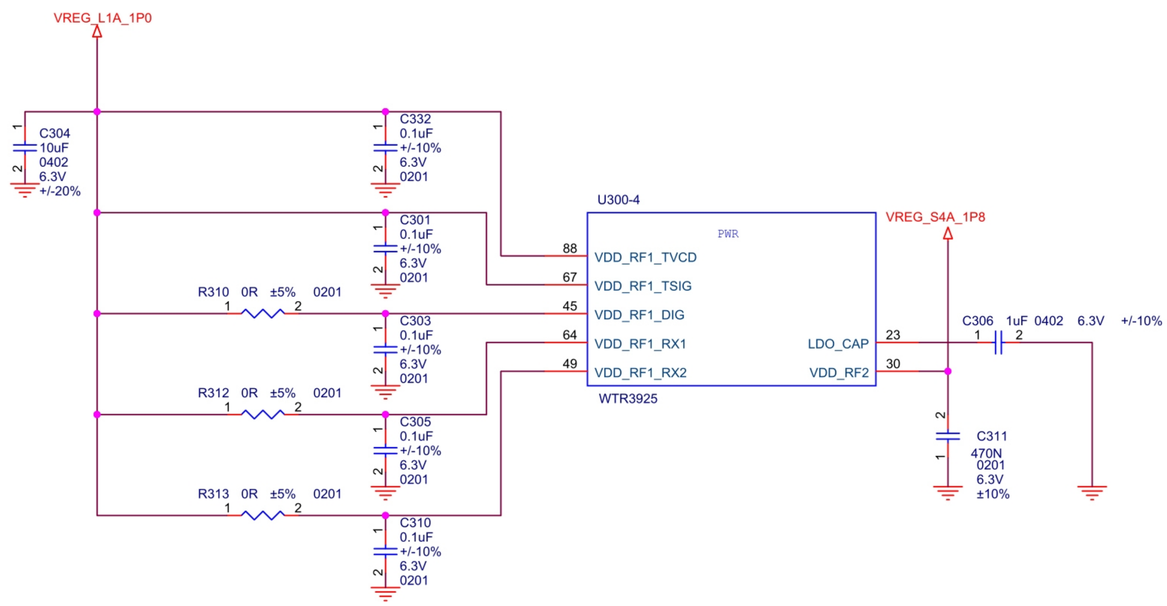

RTR8600 BYPASS

Title: B7		
Size: A3	Document Number: WTR3925L BYPASS	Rev: P0
Date: Wednesday, August 17, 2016	Sheet 8 of 35	

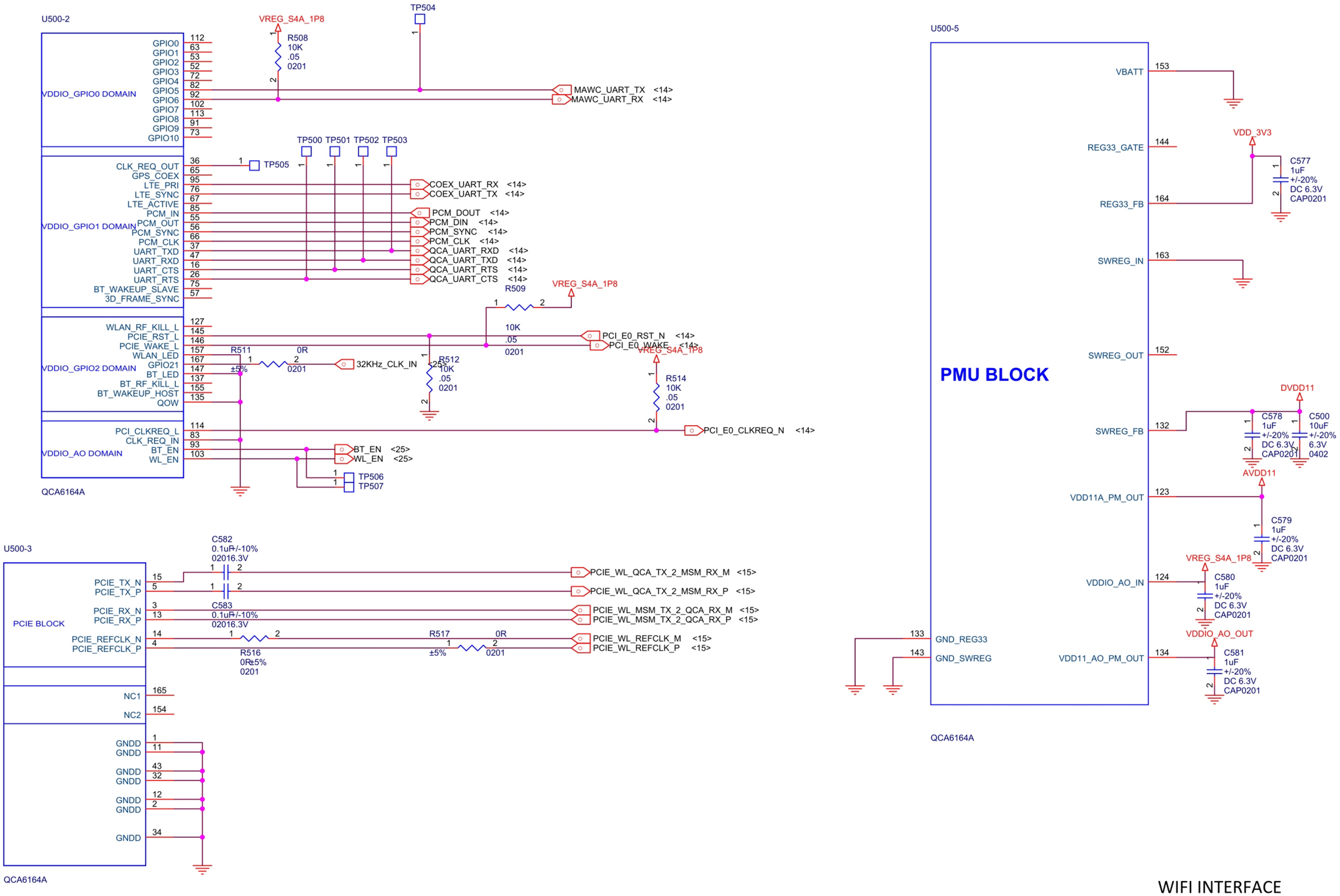

WIFI INTERFACE

Title B7		
Size A3	Document Number WIFI INTERFACE	Rev P0
Date: Wednesday, August 17, 2016	Sheet 9 of 35	

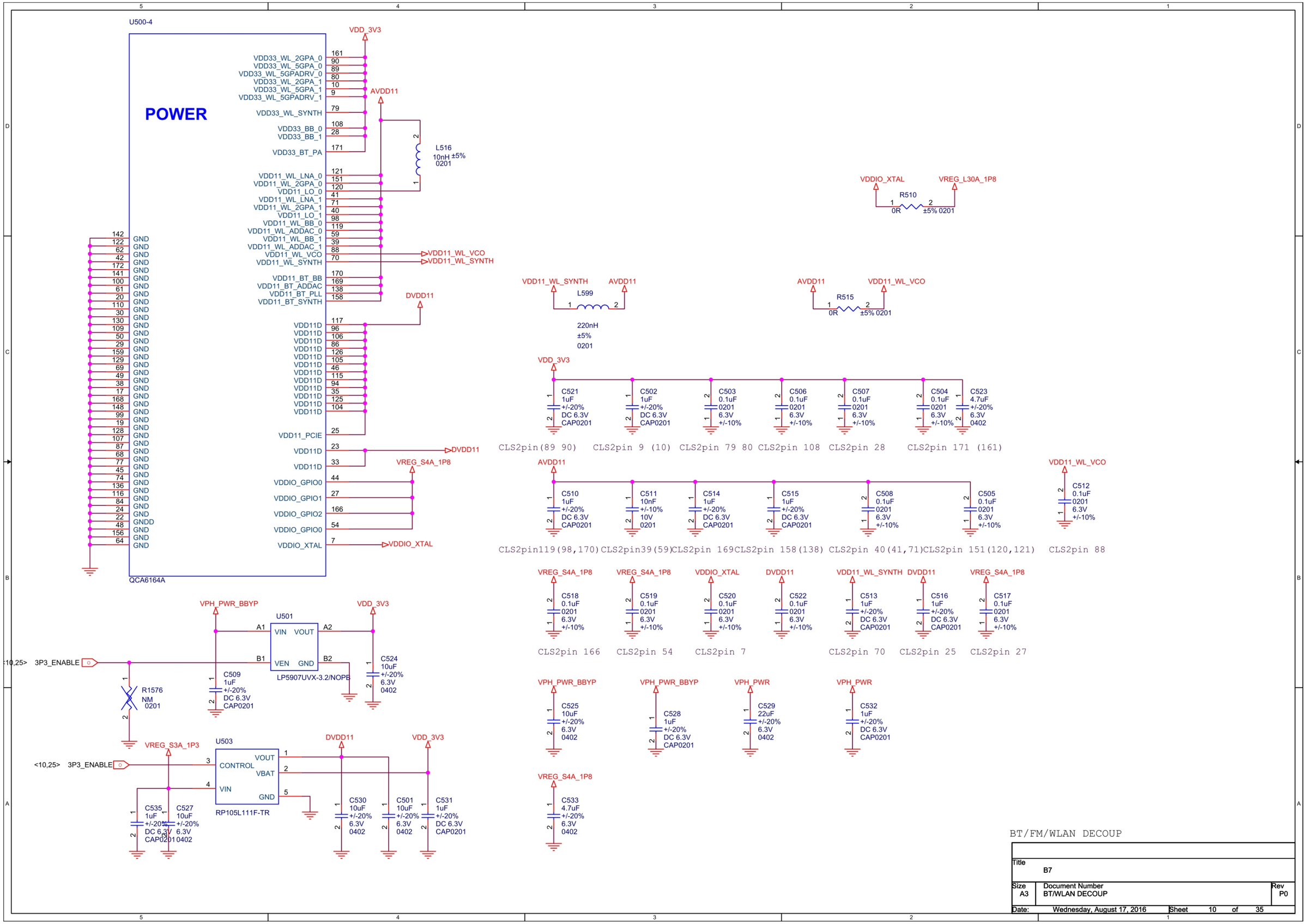

BT/FM/WLAN DECOUP

Title	B7	
Size A3	Document Number BT/WLAN DECOUP	Rev P0
Date: Wednesday, August 17, 2016	Sheet 10 of 35	

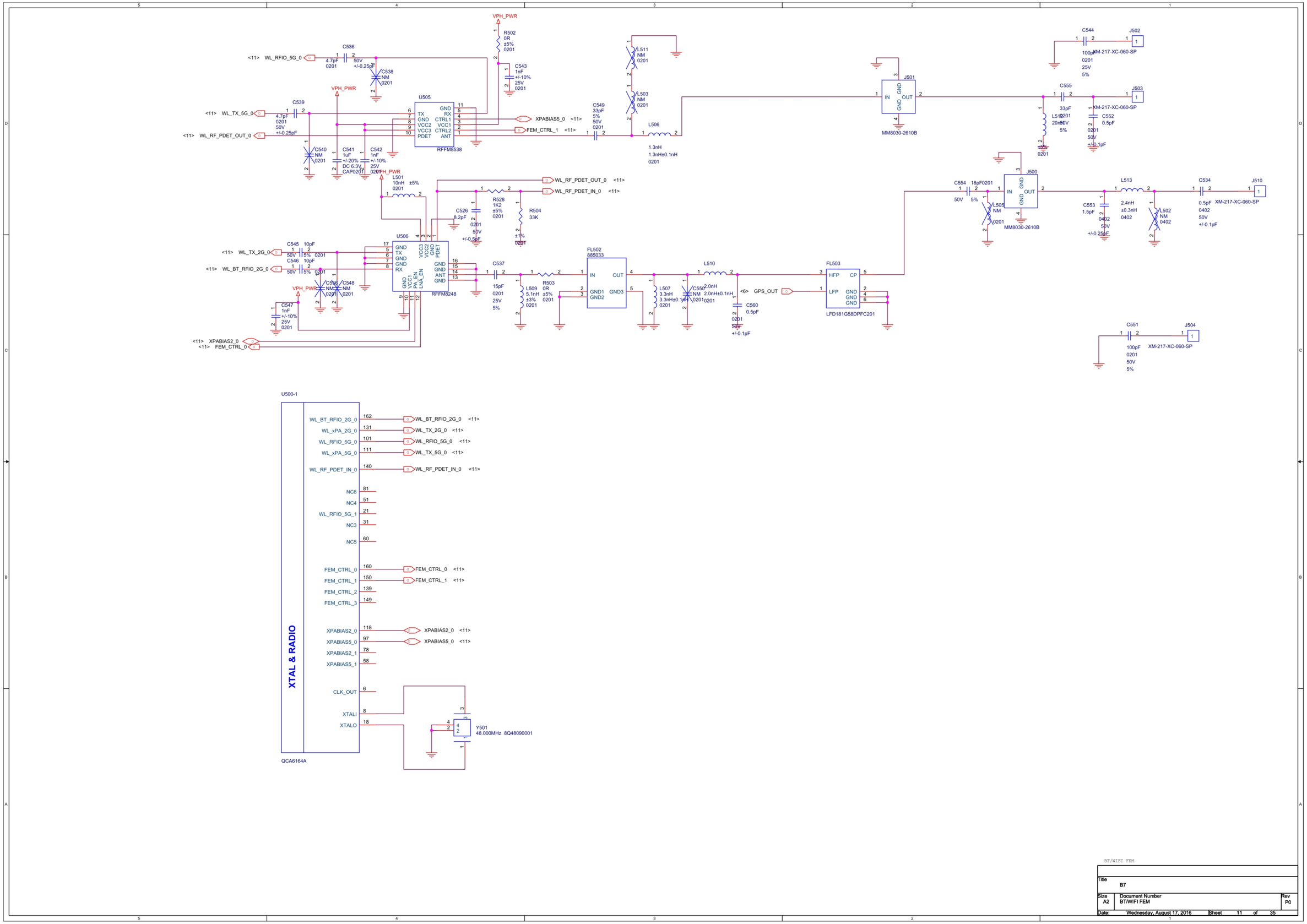

BT/WIFI FEM

Title	B7	
Size A2	Document Number BT/WIFI FEM	Rev P0
Date: Wednesday, August 17, 2016	Sheet 11 of 35	

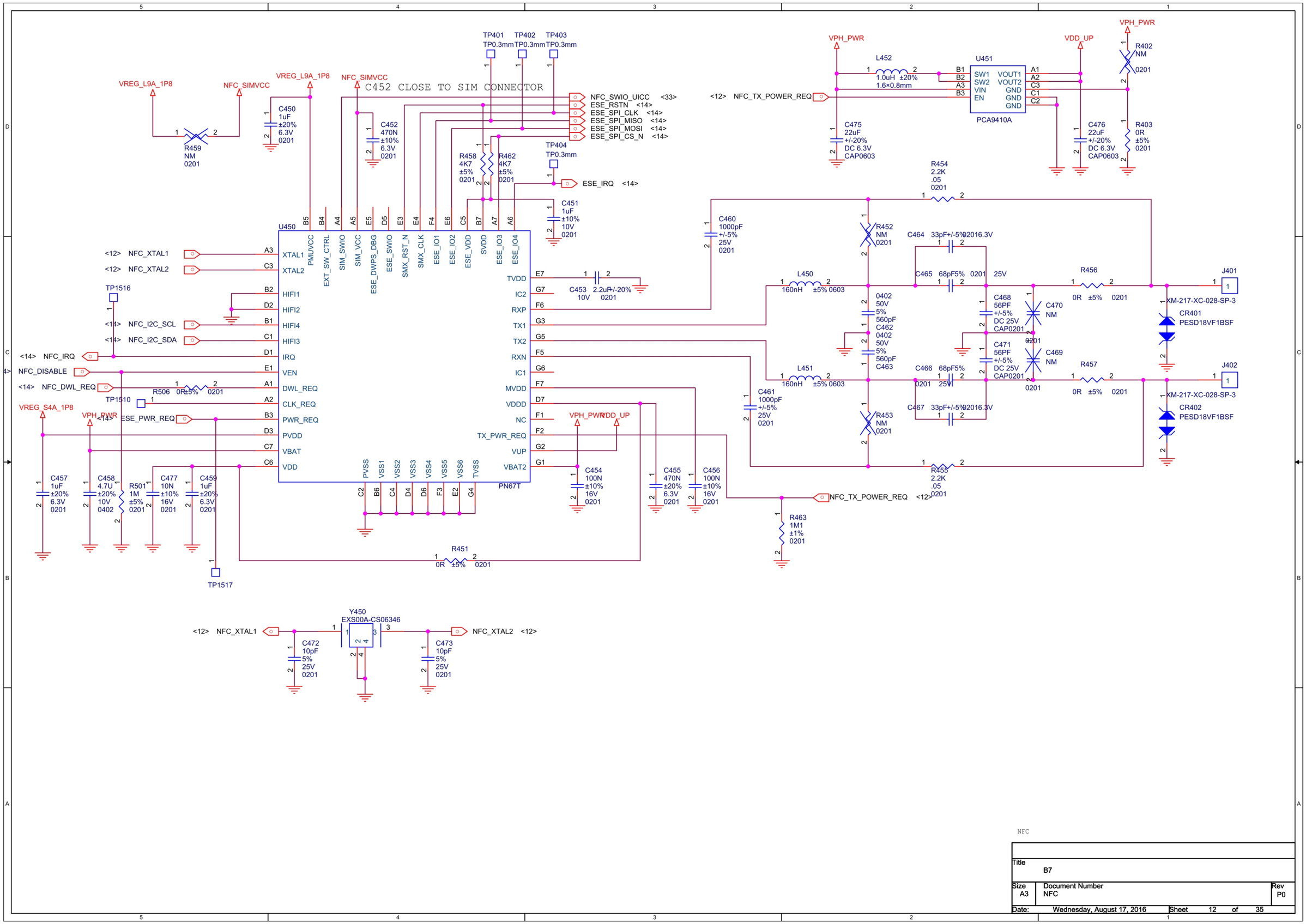

NFC

Title	B7	
Size A3	Document Number NFC	Rev P0
Date: Wednesday, August 17, 2016	Sheet 12 of 35	

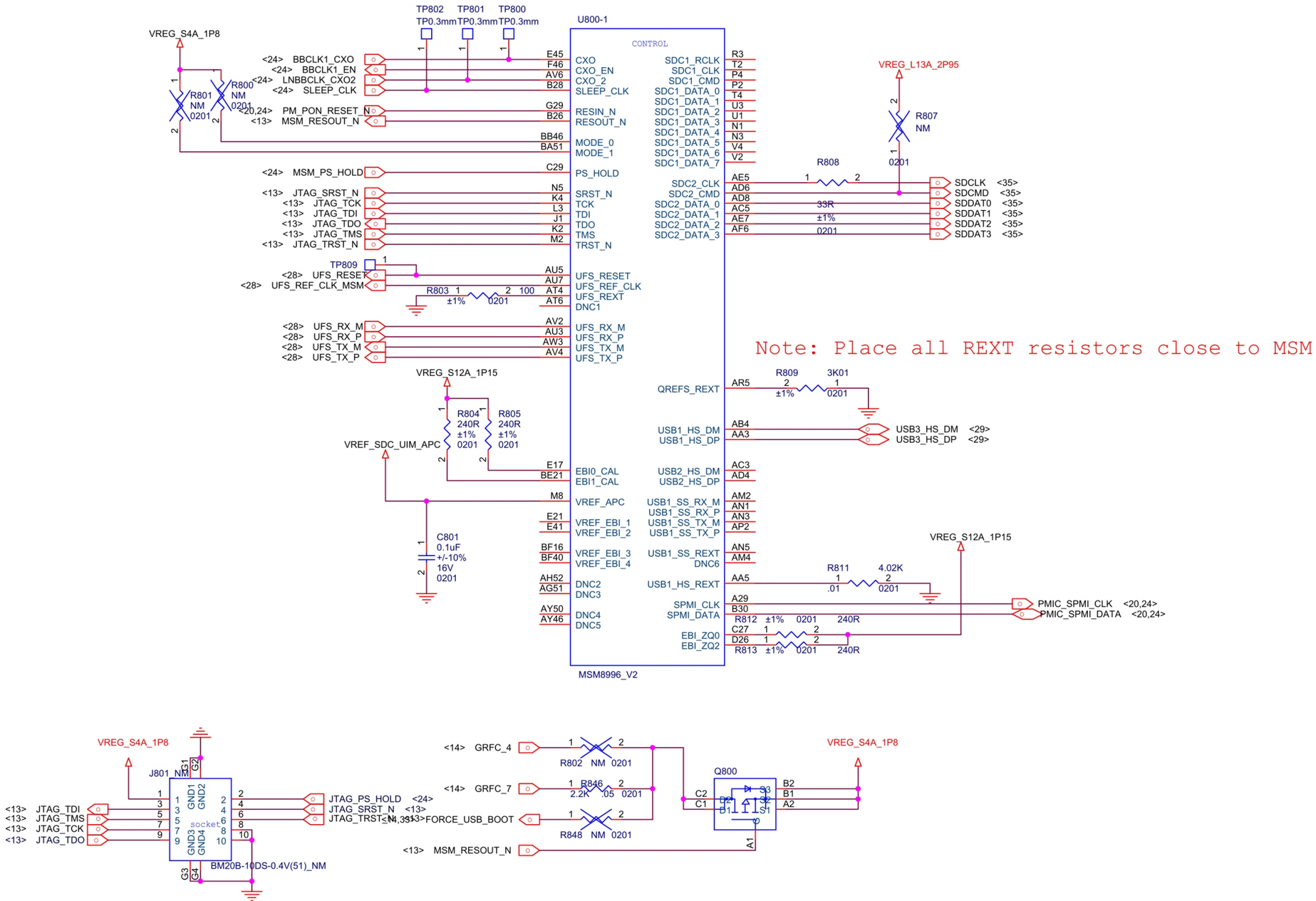

MSM8996 CONTROL

Title	B7	
Size A3	Document Number MSM8996 CONTROL	Rev P0
Date: Wednesday, August 17, 2016	Sheet 13 of 35	

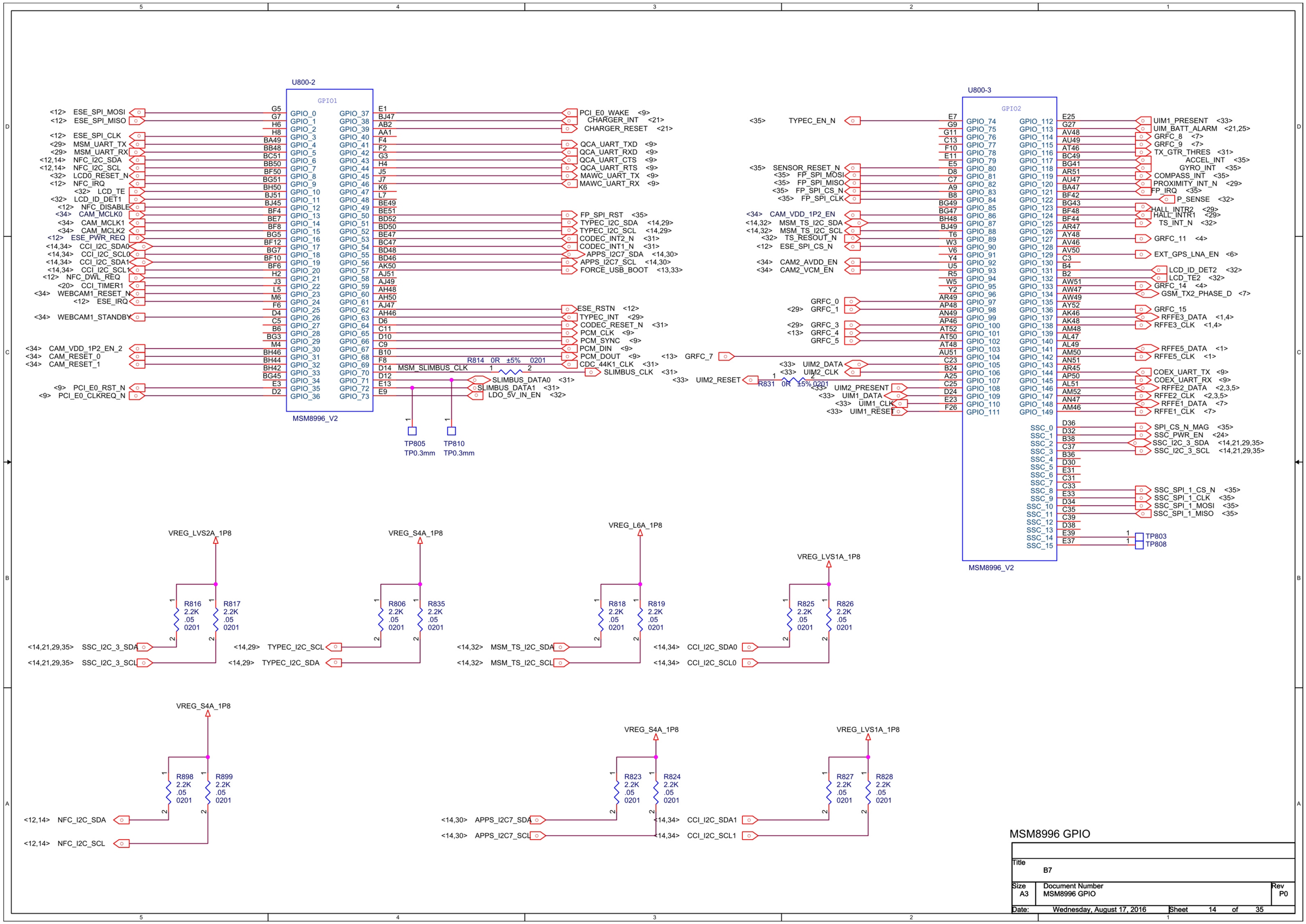

MSM8996 GPIO

Title: B7		
Size: A3	Document Number: MSM8996 GPIO	Rev: P0
Date: Wednesday, August 17, 2016	Sheet 14 of 35	

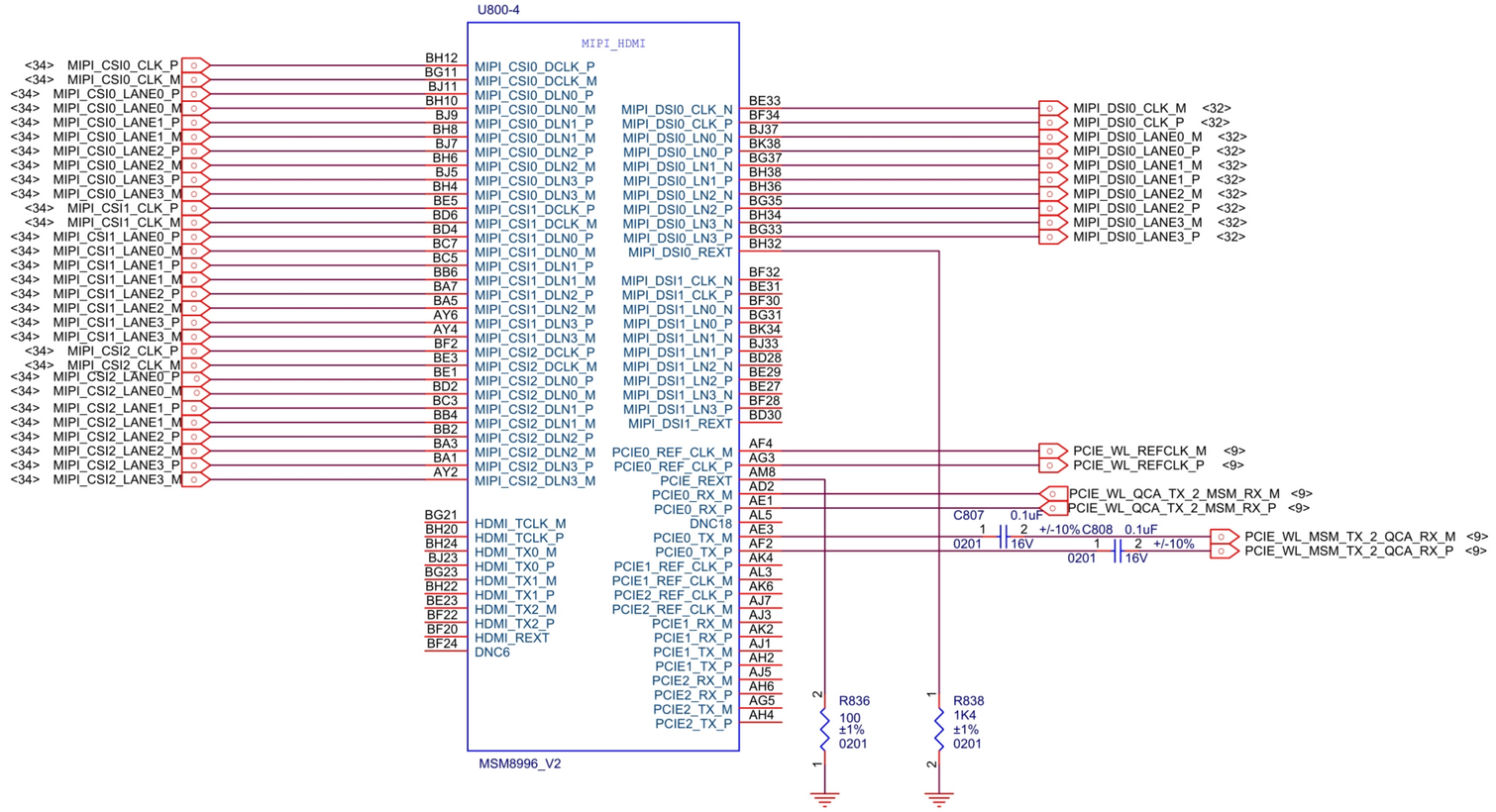

MSM8996 MIPI

Title	B7	
Size A3	Document Number MSM8996 MIPI	Rev P0
Date: Wednesday, August 17, 2016	Sheet 15 of 35	

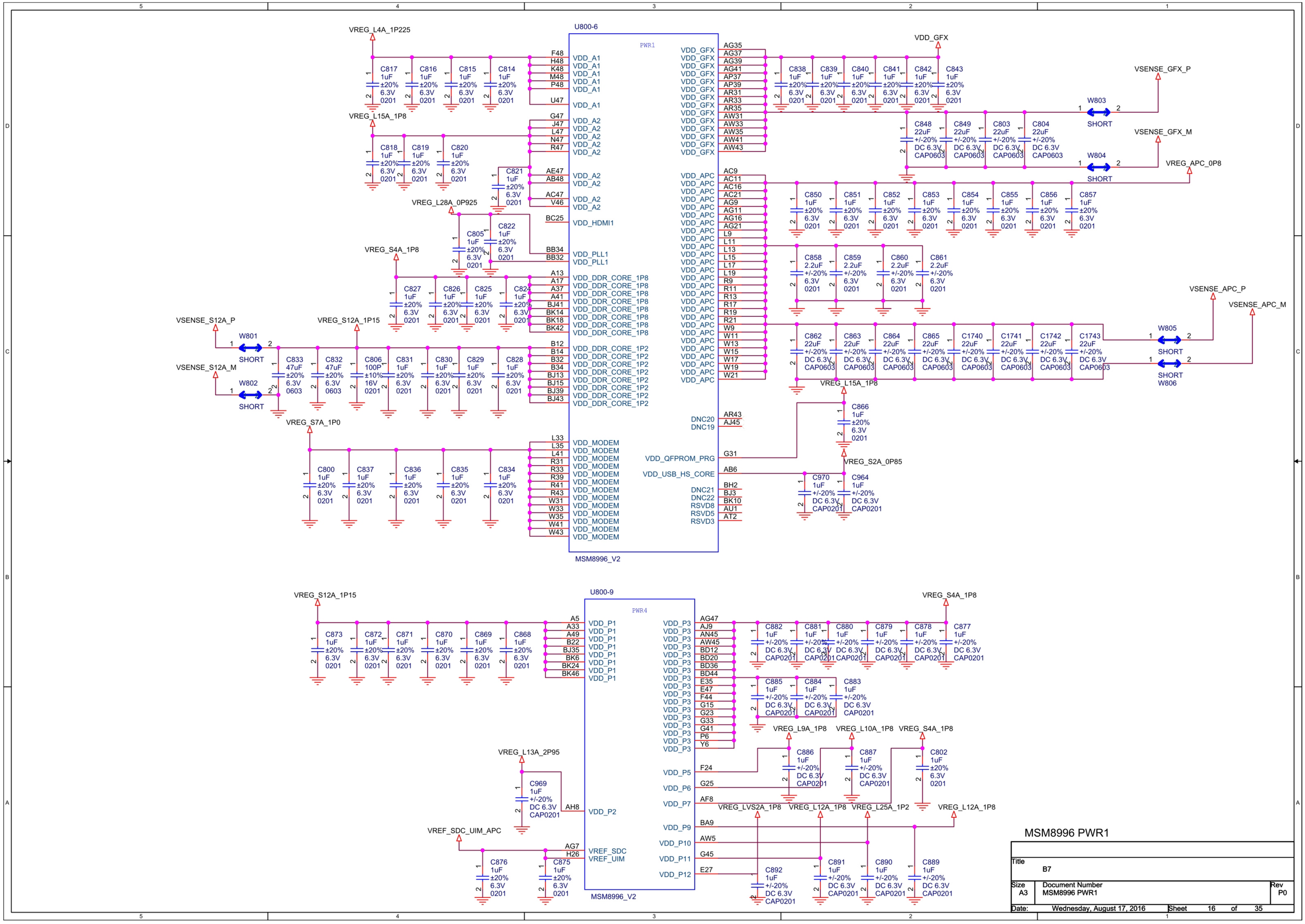

MSM8996 PWR1

Title	B7	
Size A3	Document Number MSM8996 PWR1	Rev P0
Date: Wednesday, August 17, 2016	Sheet 16 of 35	

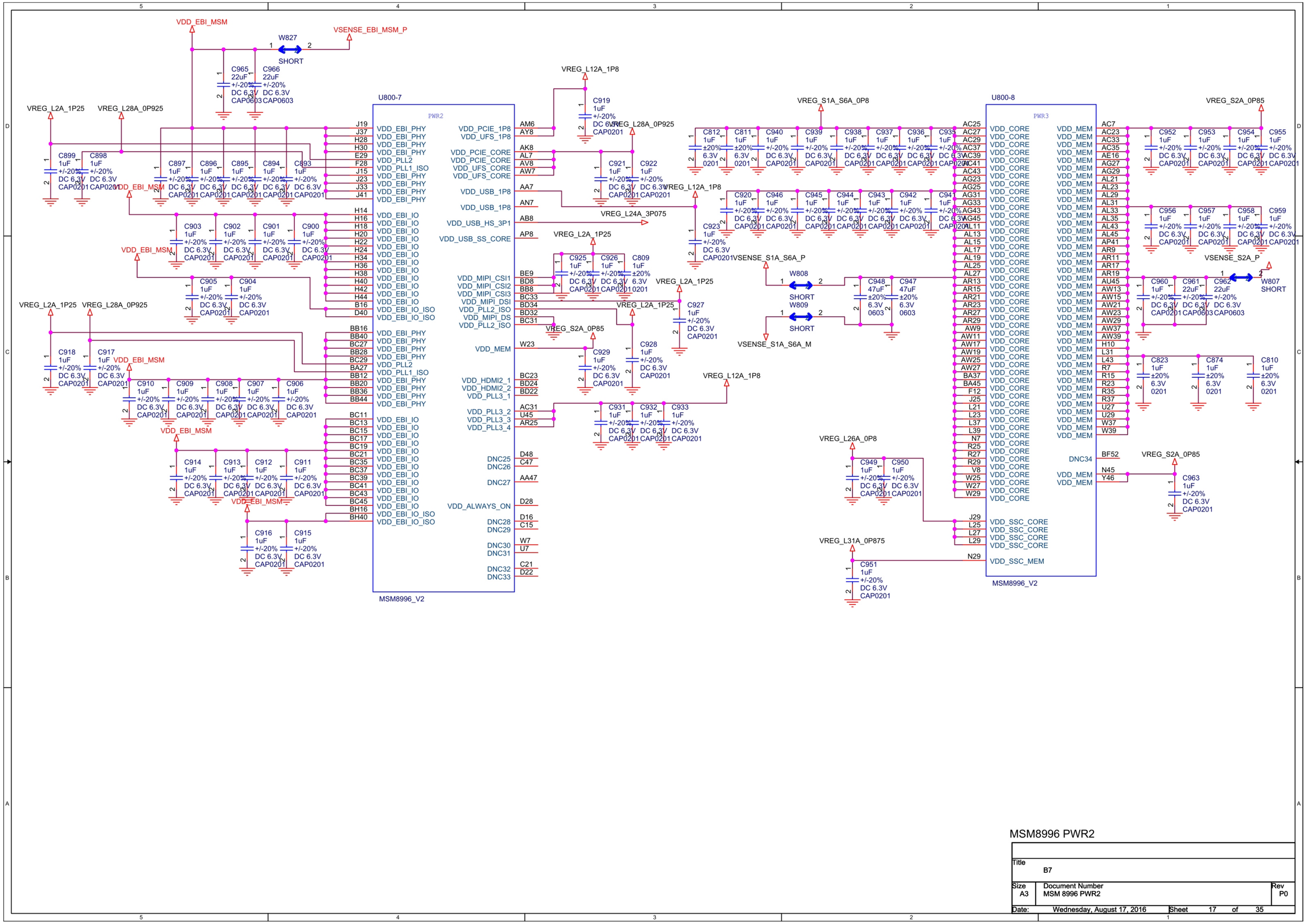

MSM8996 PWR2

Title	B7	
Size A3	Document Number MSM 8996 PWR2	Rev P0
Date: Wednesday, August 17, 2016	Sheet 17 of 35	

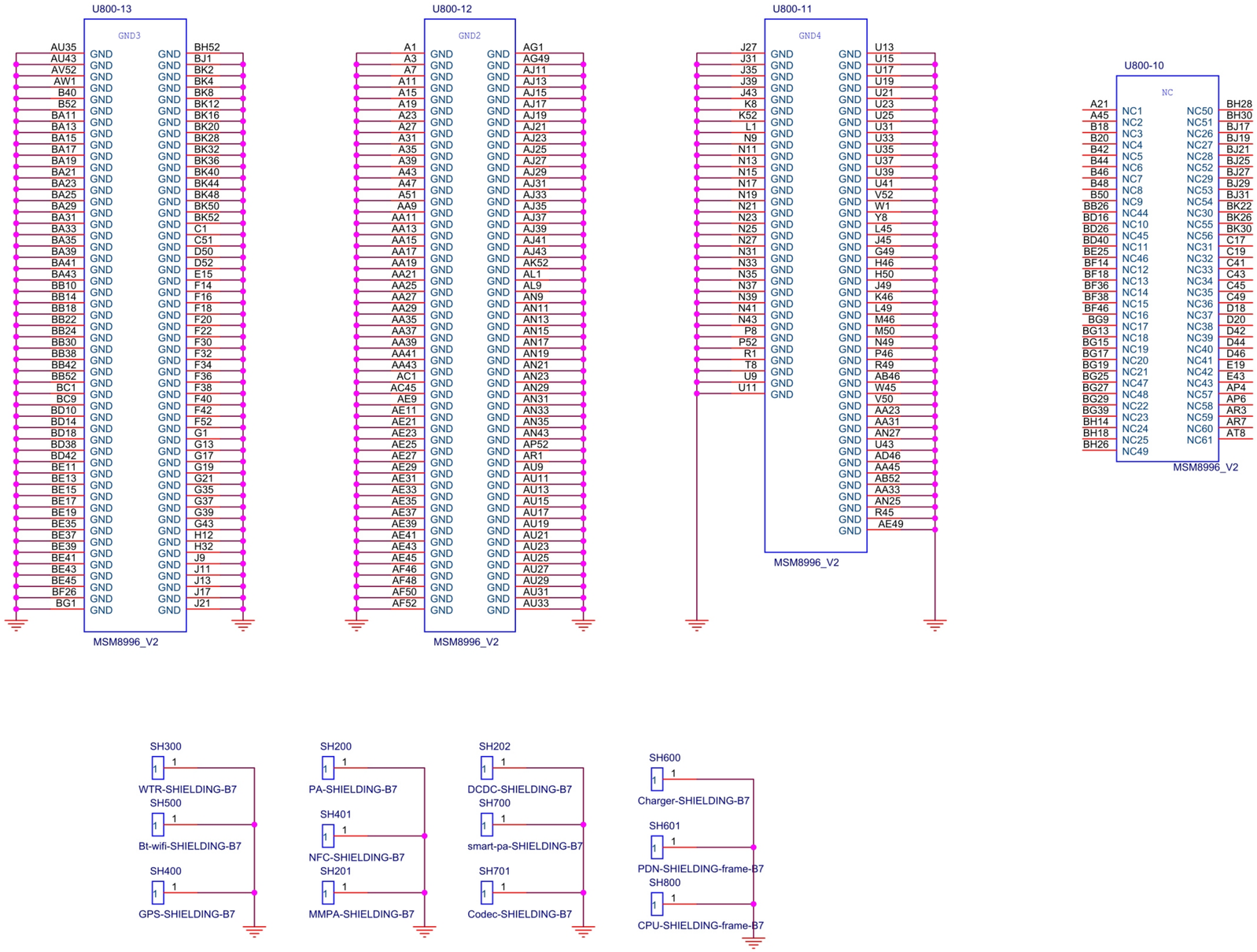

MSM8996 GND

Title: B7		
Size: A3	Document Number: MSM8996 GND	Rev: P0
Date: Wednesday, August 17, 2016	Sheet 18 of 35	

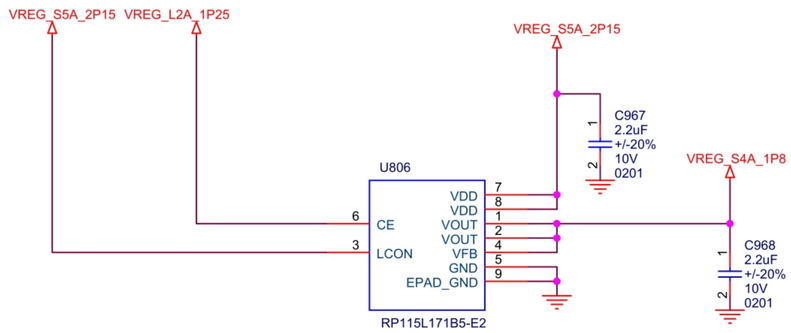

MSM8996 LPDDR REGULATOR

Title B7		
Size A3	Document Number MSM8996 LPDDR REGULATOR	Rev P0
Date: Wednesday, August 17, 2016	Sheet 19 of 35	

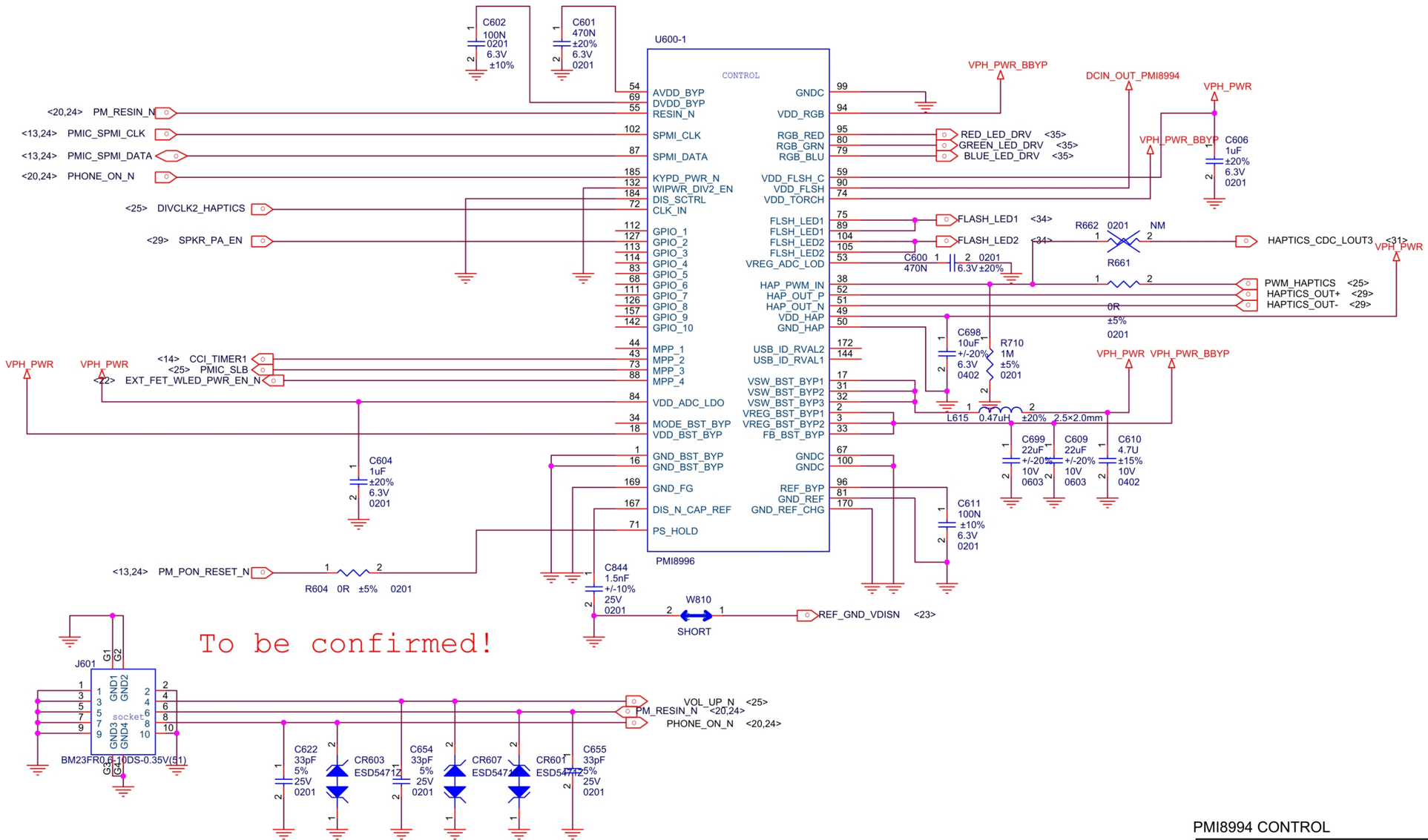

PMI8994 CONTROL

Title	B7	
Size A3	Document Number PMI8996 CONTROL	Rev P0
Date: Wednesday, August 17, 2016	Sheet 20 of 35	

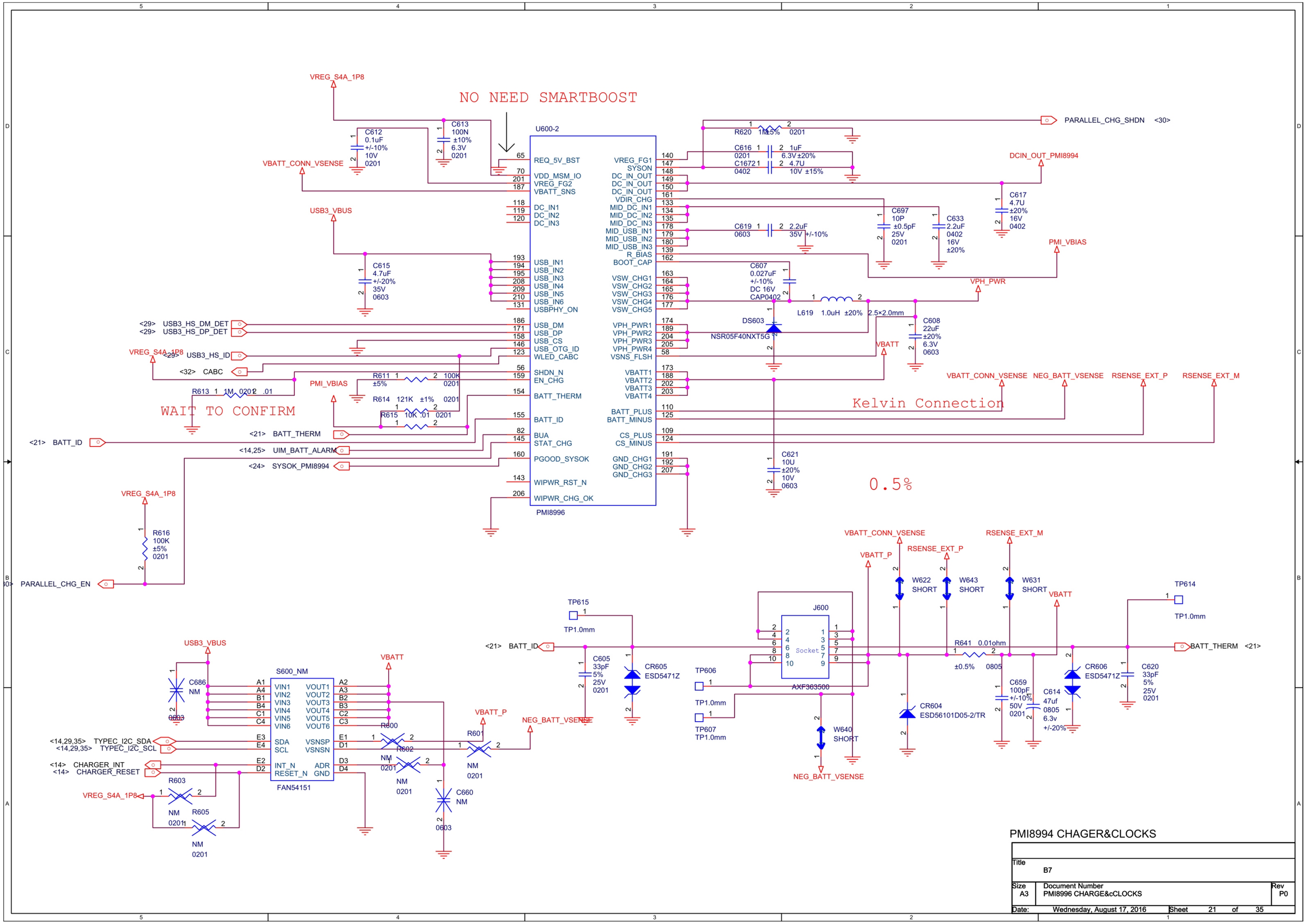

PMI8994 CHAGER&CLOCKS

Title	B7	
Size A3	Document Number PMI8996 CHARGE&cCLOCKS	Rev P0
Date: Wednesday, August 17, 2016	Sheet 21 of 35	

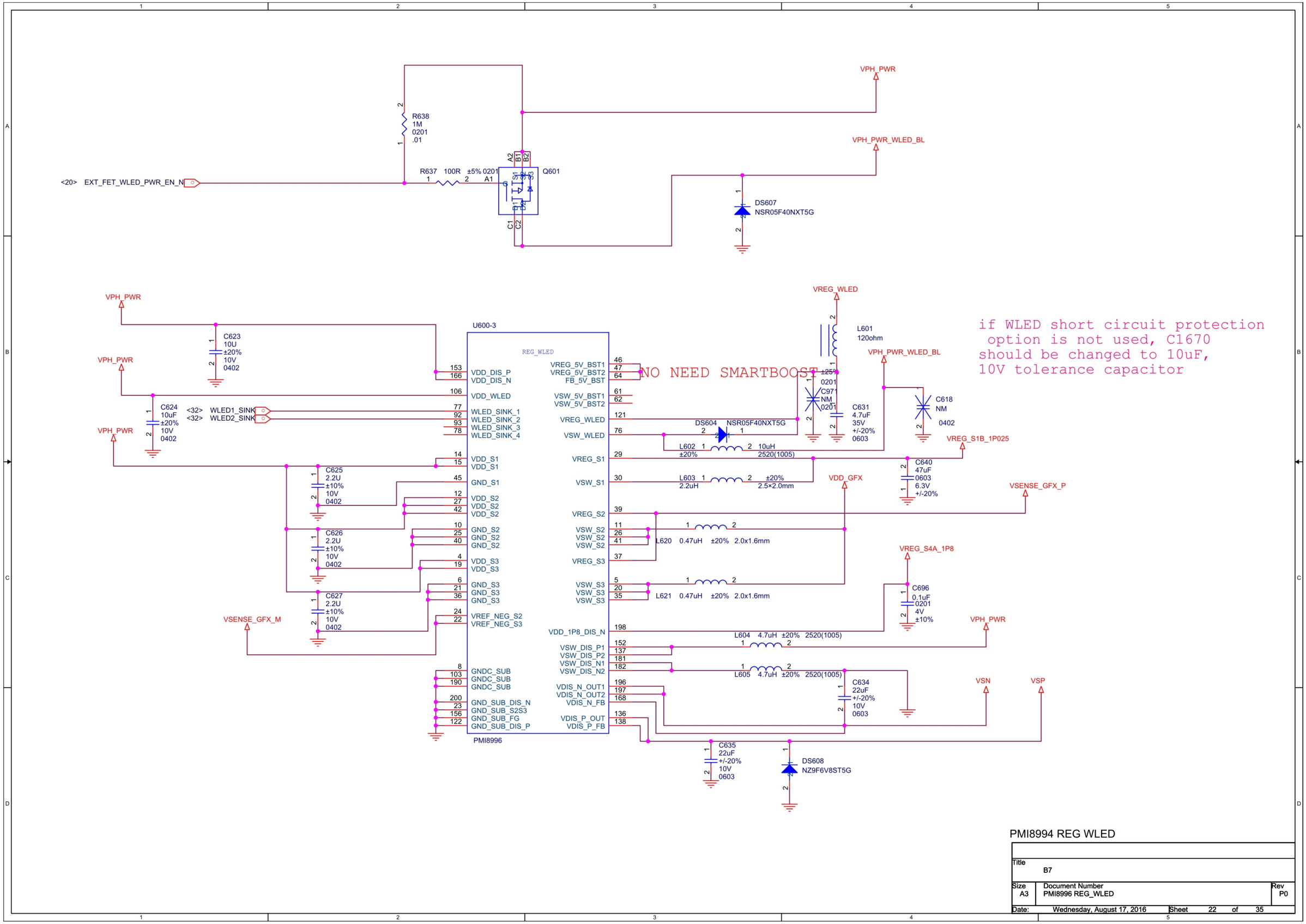

if WLED short circuit protection option is not used, C1670 should be changed to 10uF, 10V tolerance capacitor

PMI8994 REG WLED

Title	B7	
Size A3	Document Number PMI8996 REG_WLED	Rev P0
Date: Wednesday, August 17, 2016	Sheet 22 of 35	

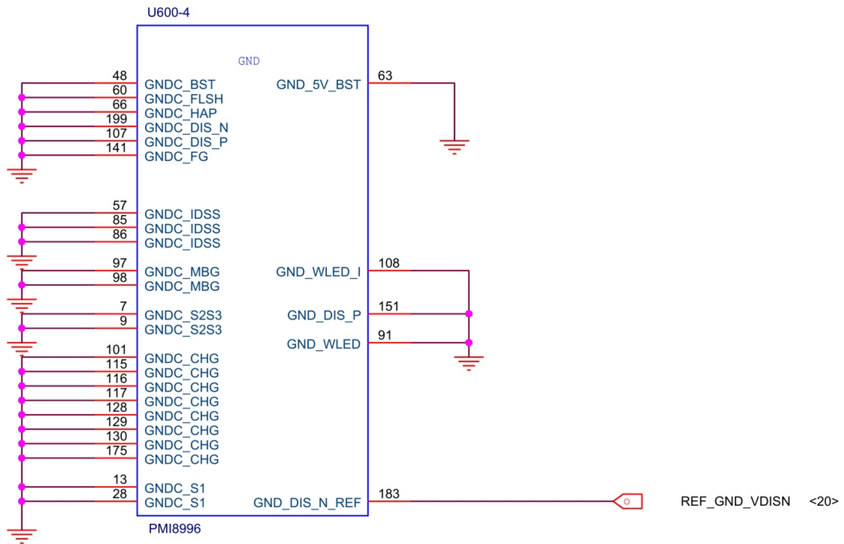

CAD NOTE: Connect to pin183 then GND with single via

PMI8994 GND

Title B7		
Size A3	Document Number PMI8996 GND	Rev P0
Date: Wednesday, August 17, 2016	Sheet 23 of 35	

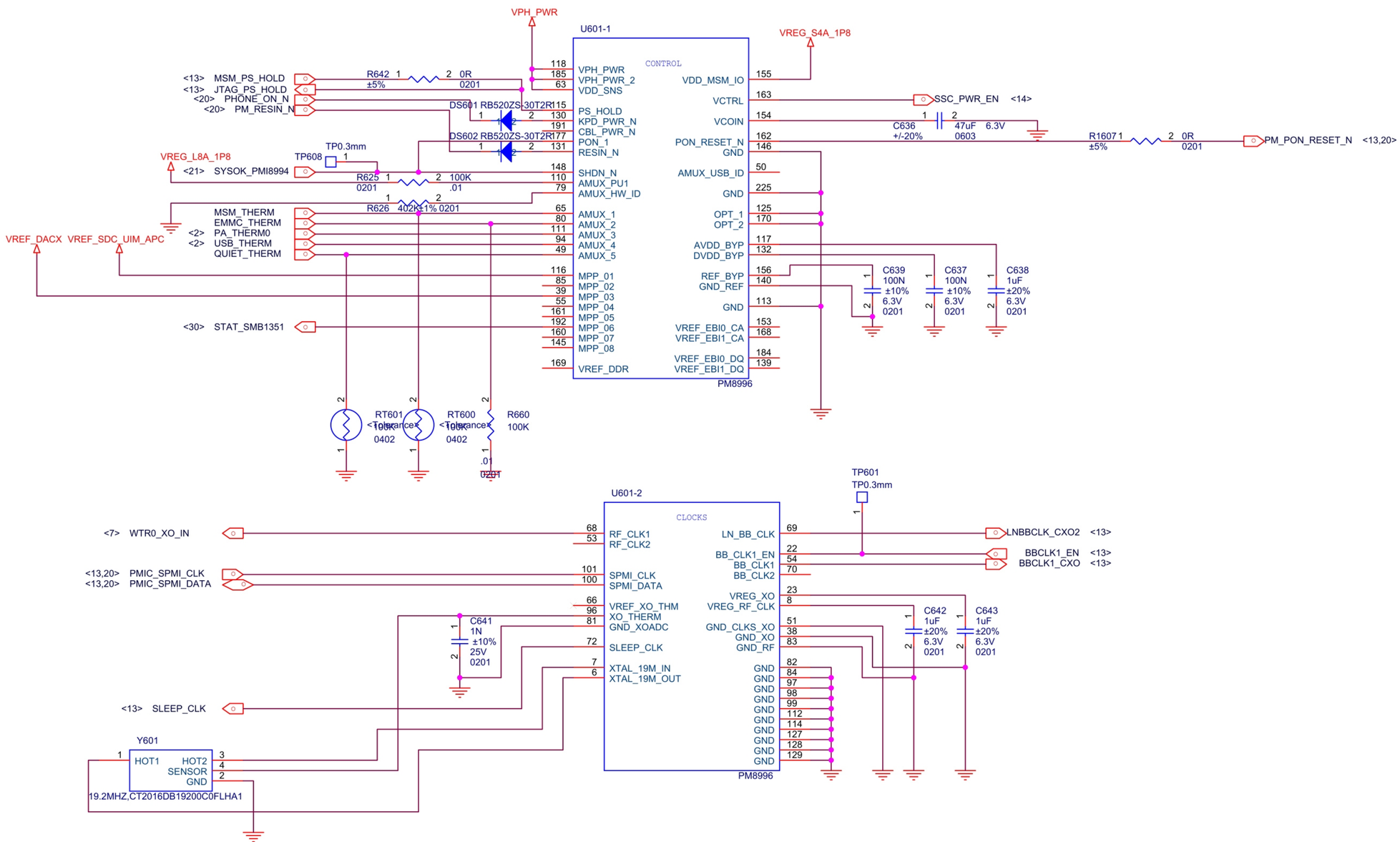

PM8996 CONTROL

Title	B7	
Size A3	Document Number PM8996 CONTROL	Rev P0
Date: Wednesday, August 17, 2016	Sheet 24 of 35	

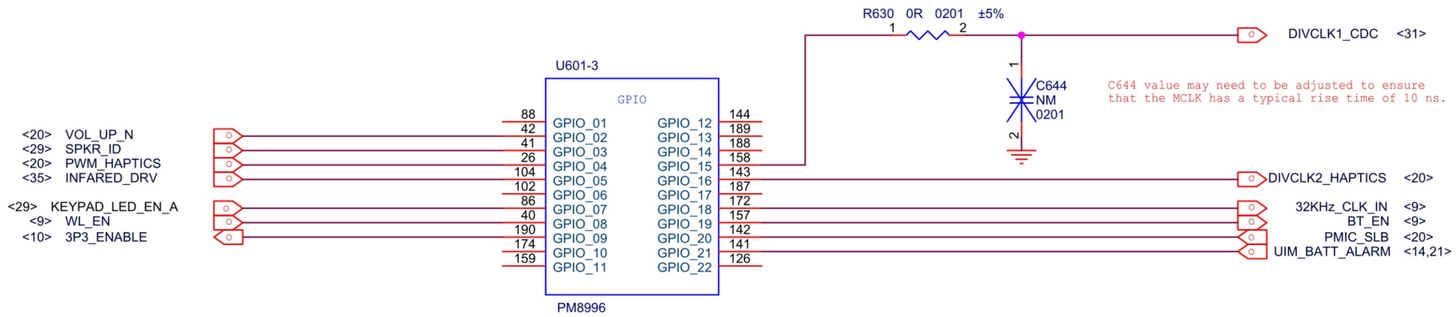

PM8996 GPIO

Title	B7	
Size A3	Document Number PM8996 GPIO	Rev P0
Date: Wednesday, August 17, 2016	Sheet 25 of 35	

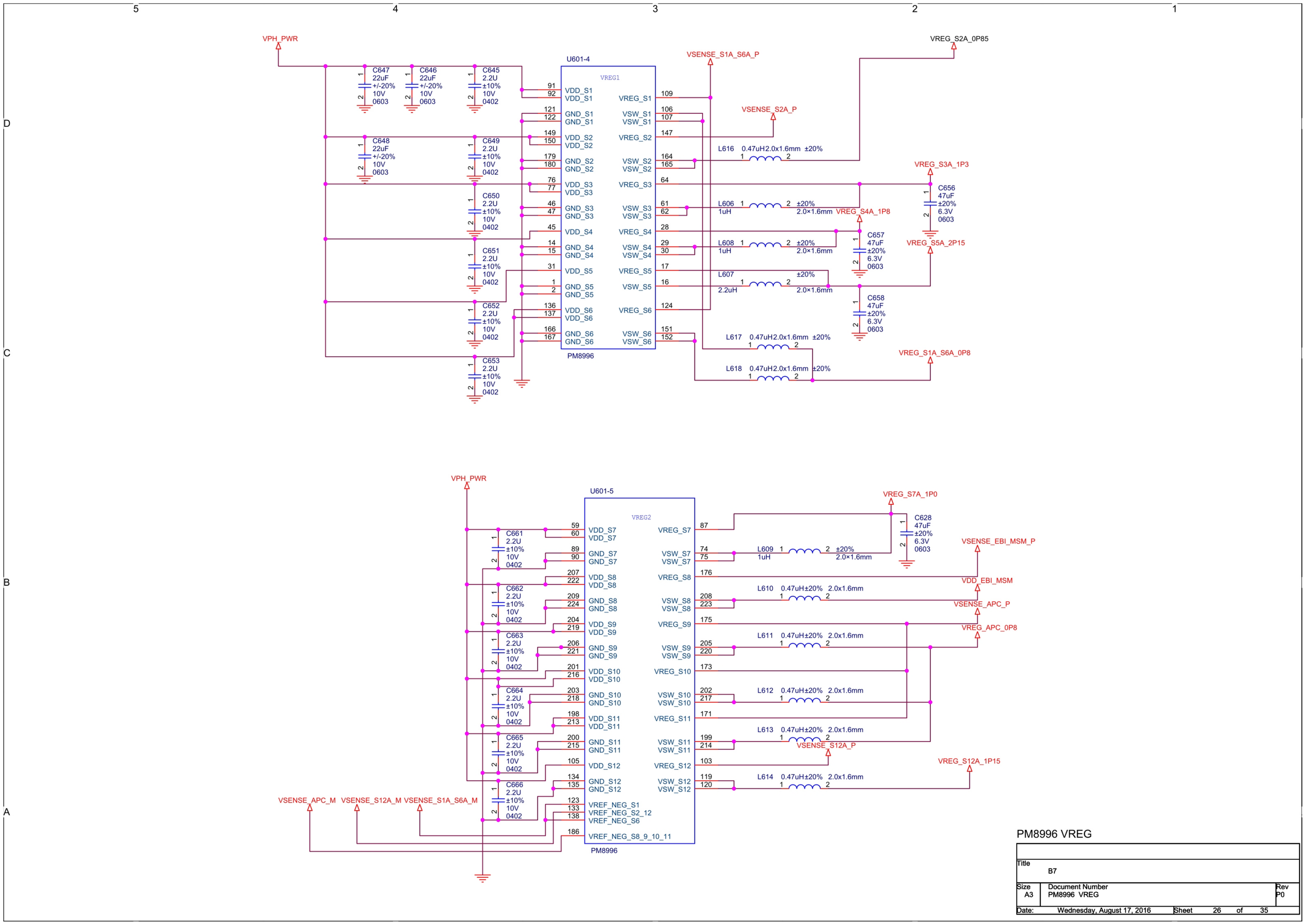

PM8996 VREG

Title	B7	
Size A3	Document Number PM8996 VREG	Rev P0
Date: Wednesday, August 17, 2016	Sheet 26 of 35	

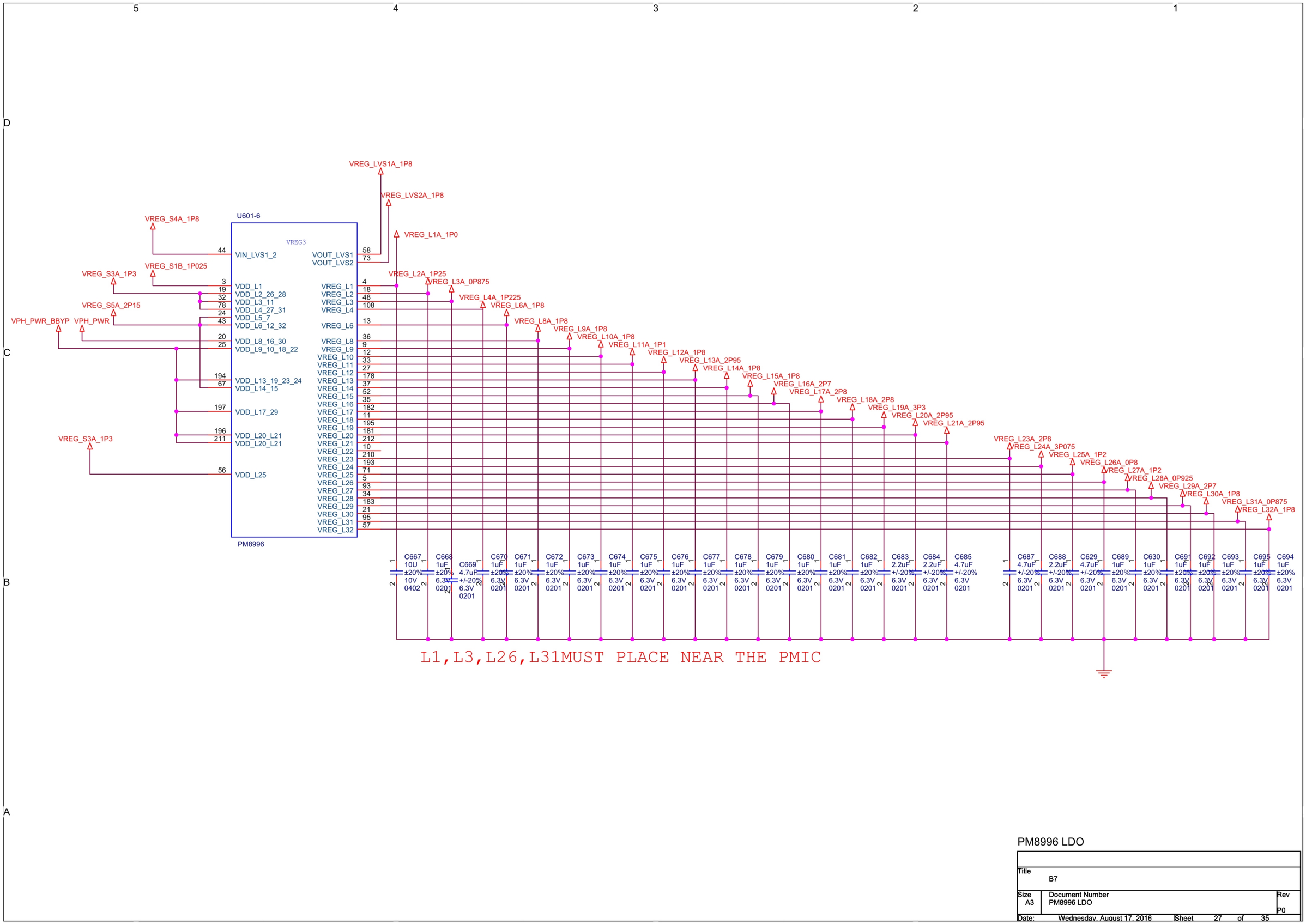

PM8996 LDO

Title	B7	
Size A3	Document Number PM8996 LDO	Rev P0
Date: Wednesday, August 17, 2016	Sheet 27 of 35	

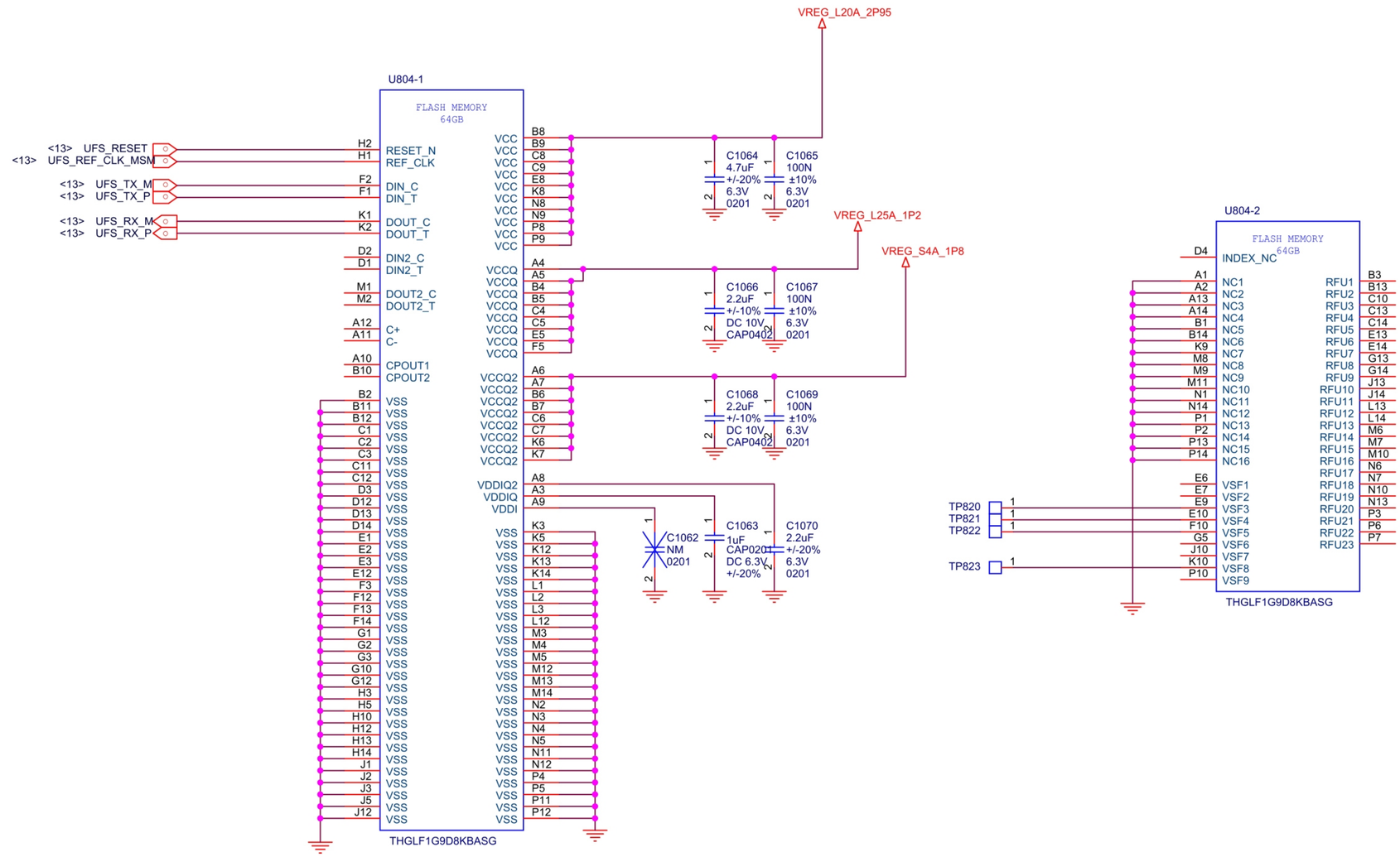

MEMORY UFS

Title: B7		
Size: A3	Document Number: MEMORY UFS	Rev: P0
Date: Wednesday, August 17, 2016	Sheet 28 of 35	

HANDSET

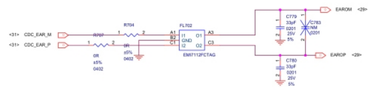

AUX Mic2

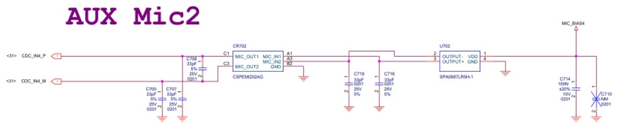

AUX Mic1

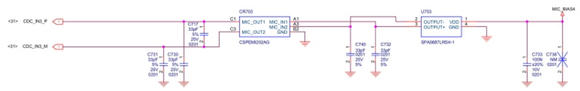

HEADSET

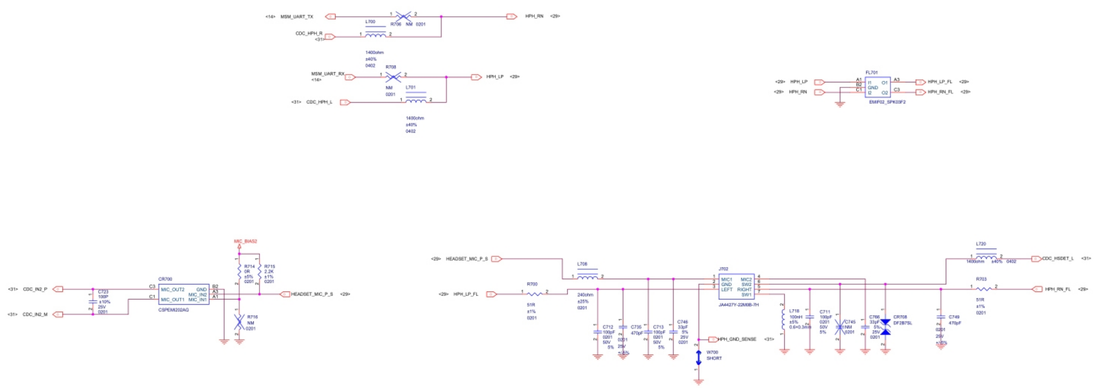

Speaker PA

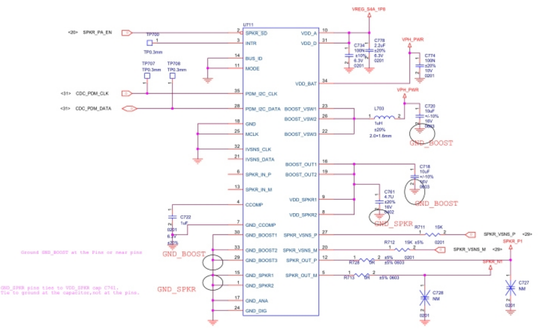

KEYPAD LED DRIVER

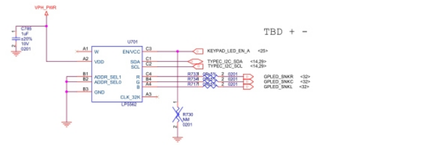

Bottom fpc Connector

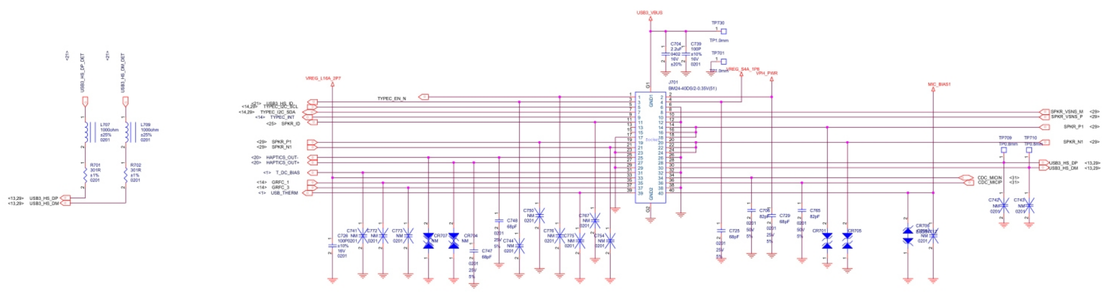

AUDIO

File	87
Size: A2	Document Number: AUDIO
Rev: PA	
Date: Wednesday, August 14, 2013	Sheet 26 of 38

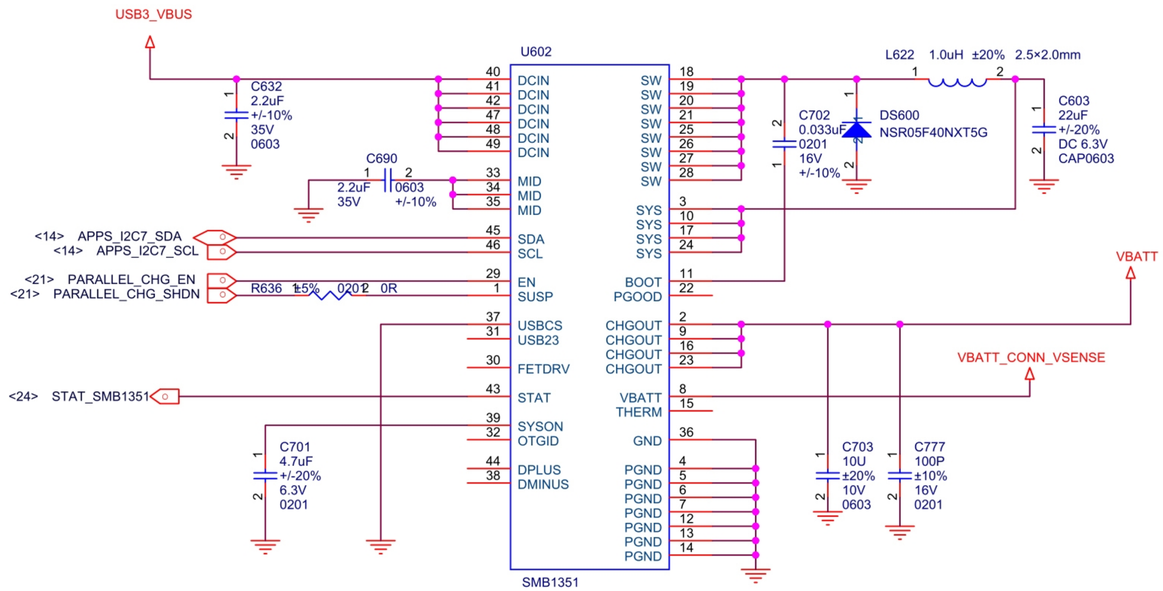

SMB1357 CHARGER

Title: B7		
Size: A3	Document Number: SMB1351 CHARGER	Rev: P0
Date: Wednesday, August 17, 2016	Sheet 30 of 35	

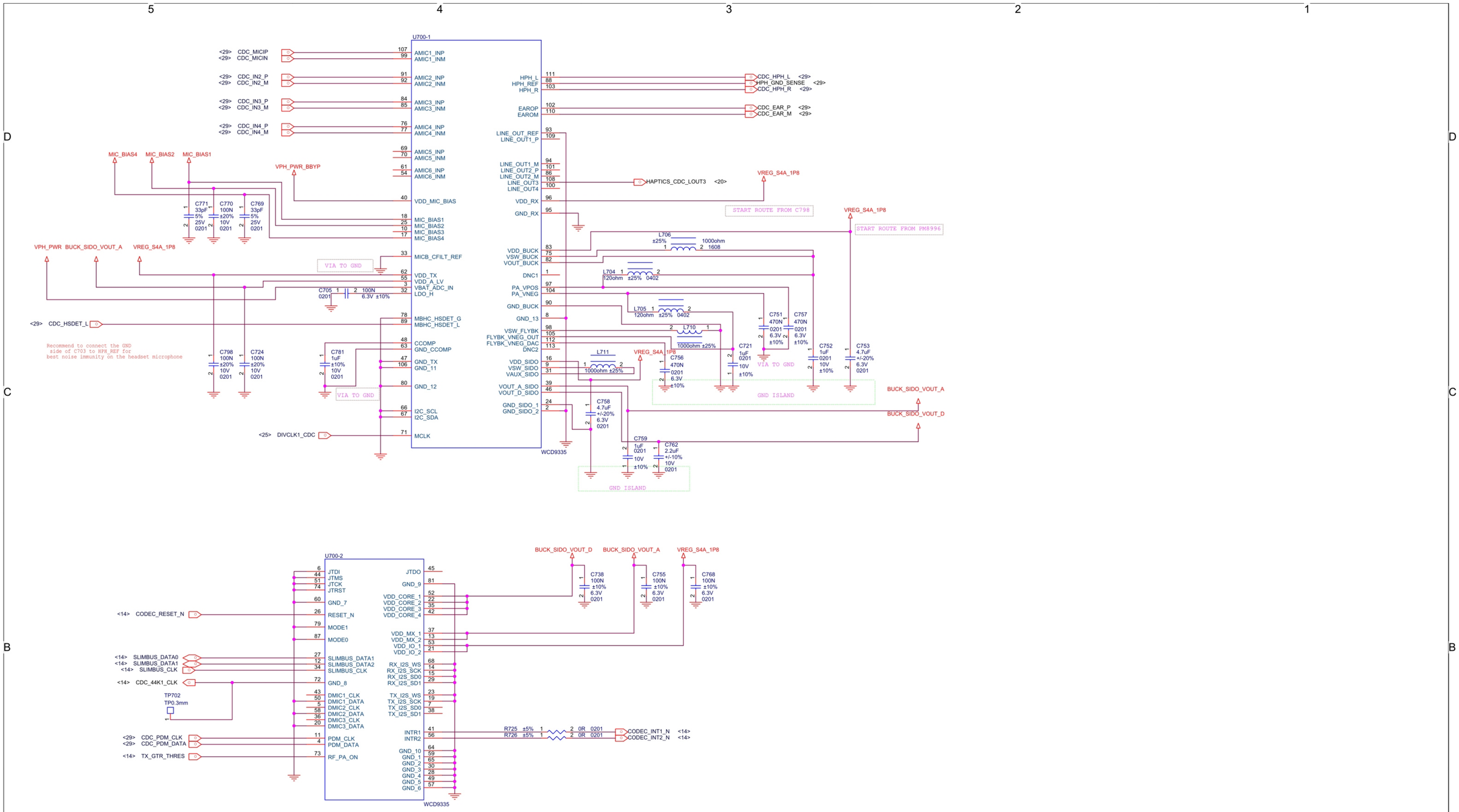

WCD9335

Title	B7		
Size A2	Document Number WCD9335		Rev P0
Date: Wednesday, August 17, 2016	Sheet 31 of 35		

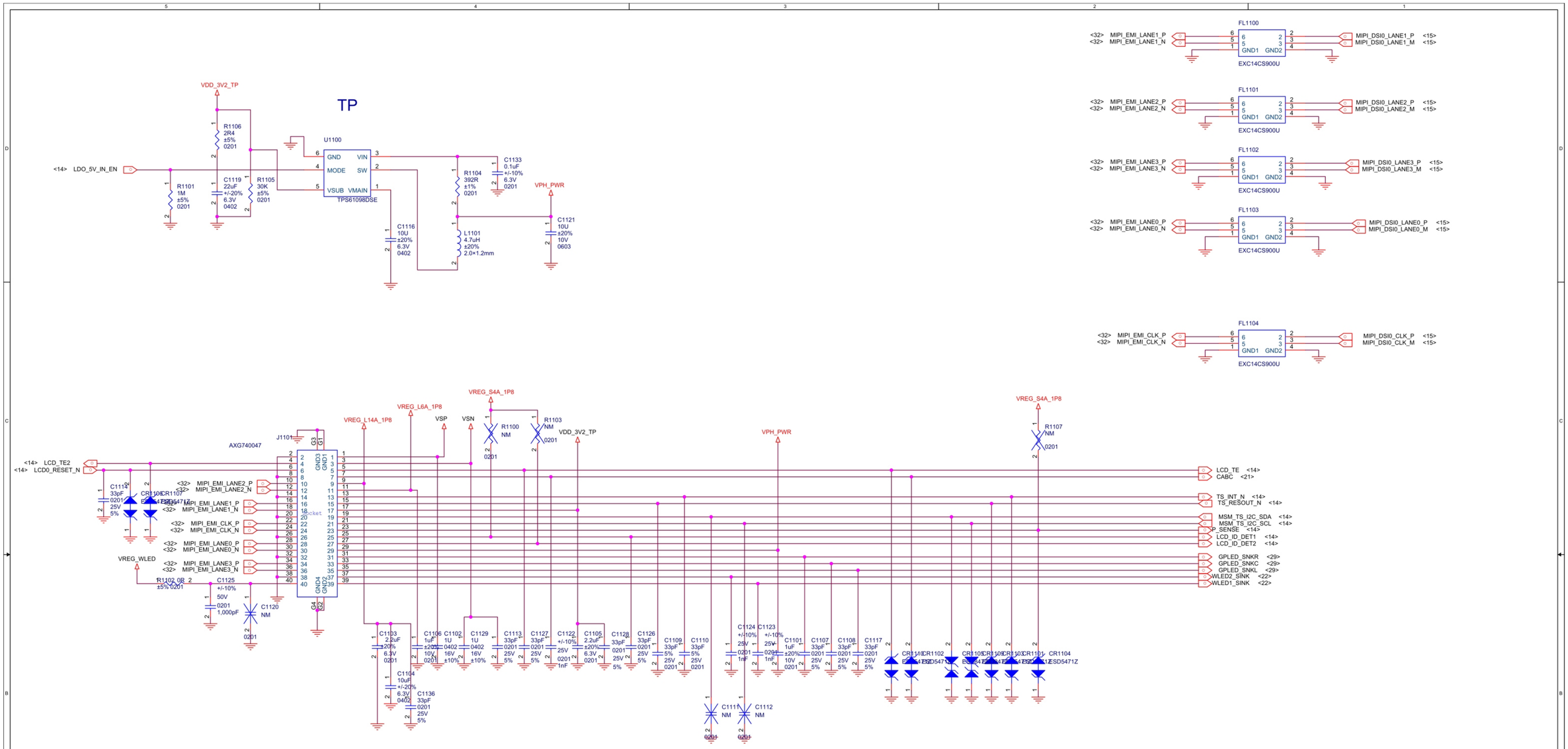

LCD

Title	XIAO MI B7
Size A2	Document Number LCD
Rev	P0
Date: Wednesday, August 17, 2016	Sheet 32 of 35

PM TGI

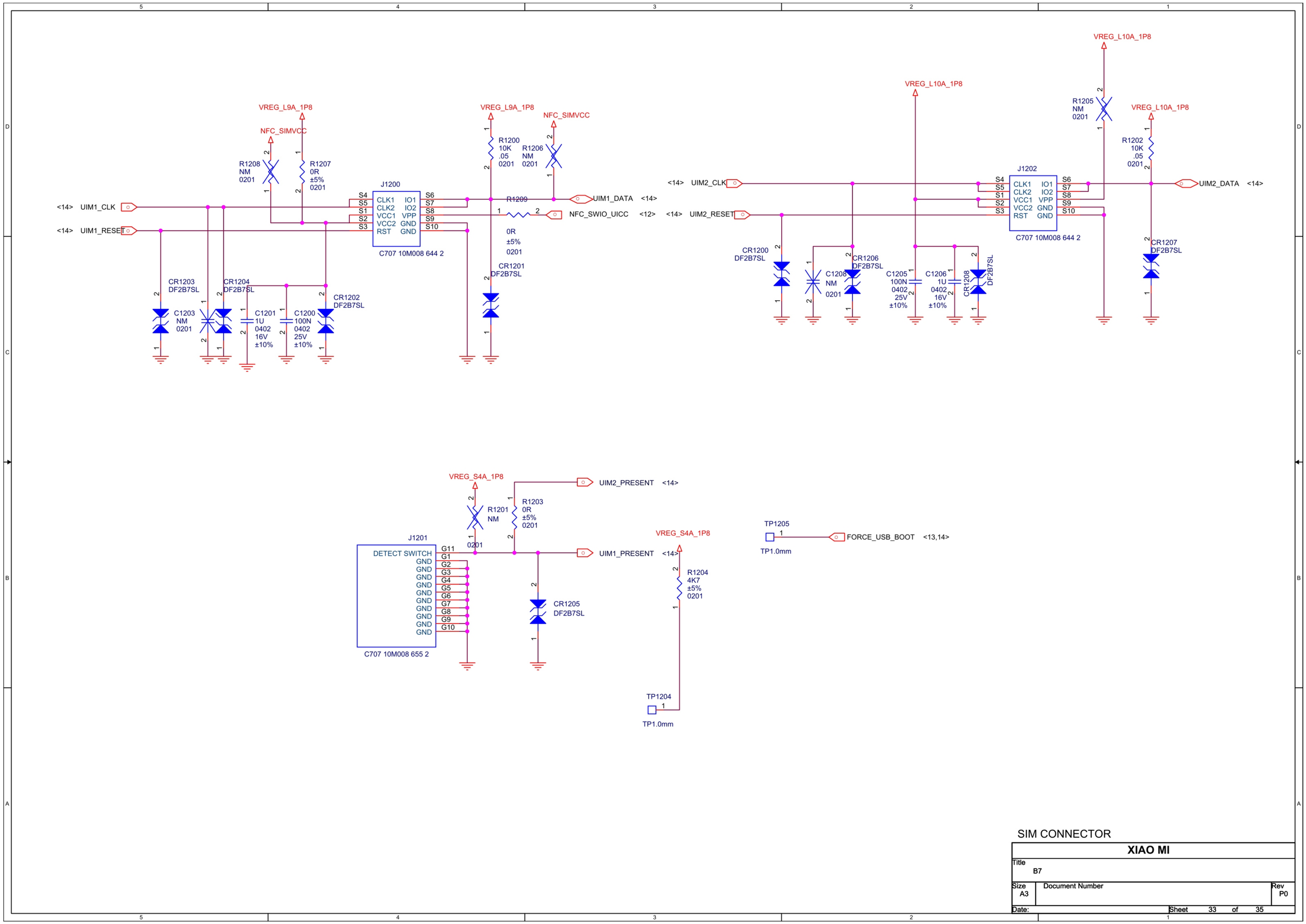

SIM CONNECTOR

XIAO MI		
Title B7		
Size A3	Document Number	Rev P0
Date:	Sheet 33 of 35	

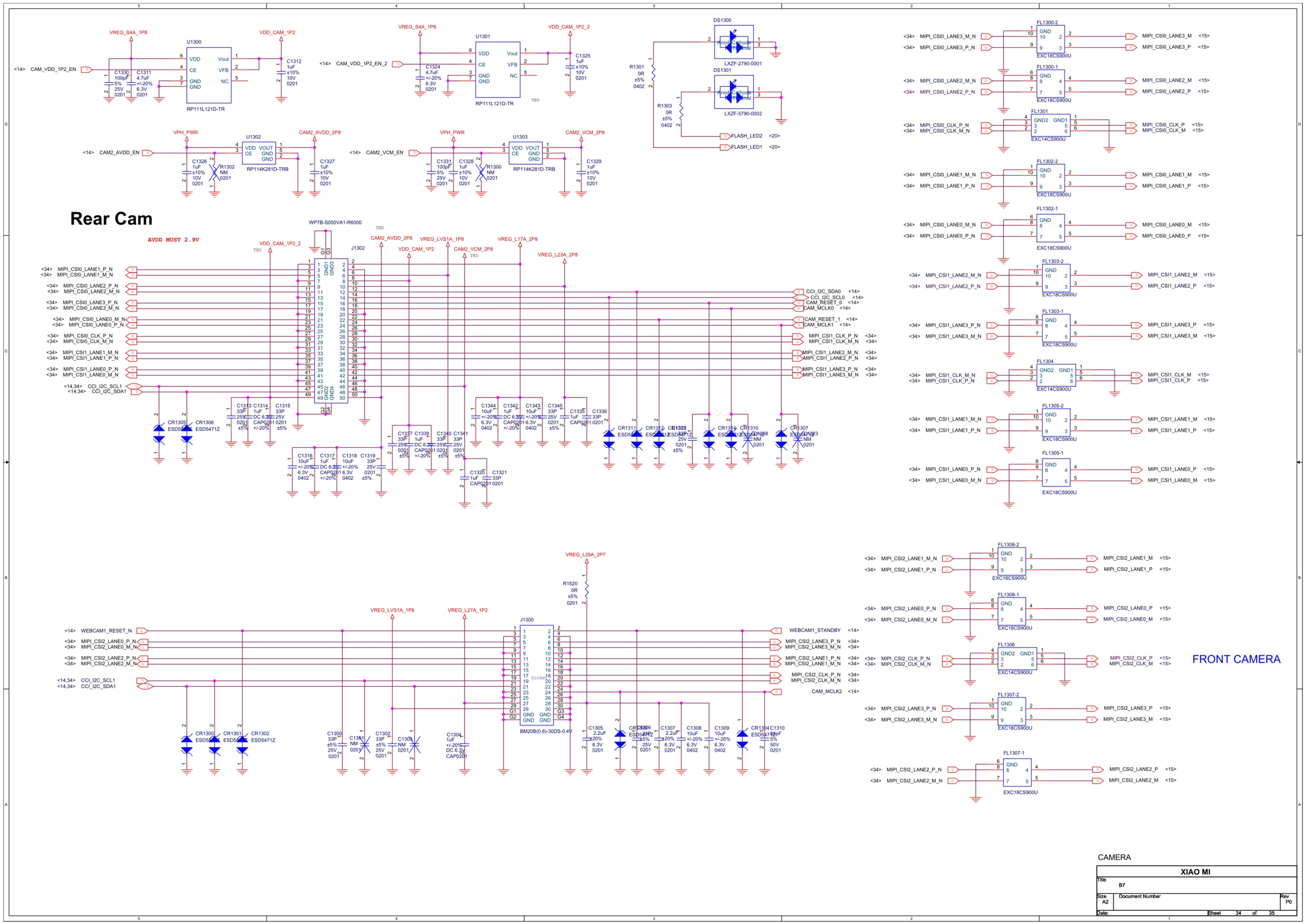
Rear Cam
AVDD MUST 2.9V
FRONT CAMERA
U1300
RP111L121D-TR
U1301
RP111L121D-TR
U1302
RP114K281D-TRB
U1303
RP114K281D-TRB
DS1300
LXZF-2790-0001
DS1301
LXZF-5790-0002
FLASH_LED2
FLASH_LED1
WP7B-S050VA1-R6000
J1302
J1300
BM20B(0.6)-30DS-0.4V
EXC18CS900U
EXC14CS900U
CAMERA
XIAO MI
B7
Document Number
Rev P0
Sheet 34 of 35

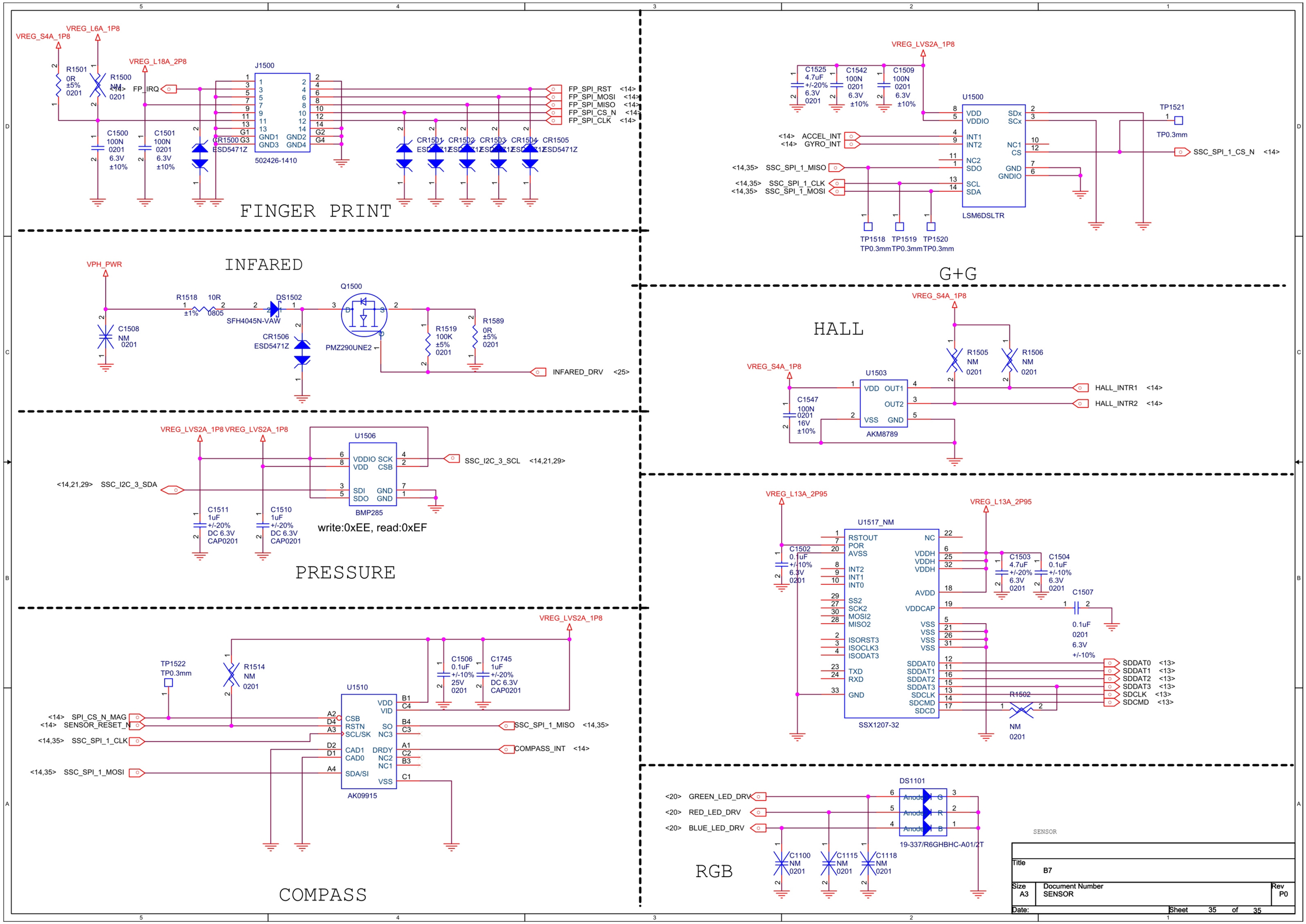
FINGER PRINT
VREG_S4A_1P8
VREG_L6A_1P8
VREG_L18A_2P8
R1501 0R ±5% 0201
R1500 NM 0201
FP_IRQ
J1500
502426-1410
C1500 100N 0201 6.3V ±10%
C1501 100N 0201 6.3V ±10%
CR1500 ESD5471Z
CR1501 CR1502 CR1503 CR1504 CR1505 ESD5471Z
FP_SPI_RST <14>
FP_SPI_MOSI <14>
FP_SPI_MISO <14>
FP_SPI_CS_N <14>
FP_SPI_CLK <14>
INFARED
VPH_PWR
R1518 10R ±1% 0805
DS1502 SFH4045N-VAW
Q1500 PMZ290UNE2
C1508 NM 0201
CR1506 ESD5471Z
R1519 100K ±5% 0201
R1589 0R ±5% 0201
INFARED_DRV <25>
VREG_LVS2A_1P8
U1506
VDDIO SCK VDD CSB SDI SDO GND GND
BMP285
SSC_I2C_3_SCL <14,21,29>
<14,21,29> SSC_I2C_3_SDA
C1511 1uF +/-20% DC 6.3V CAP0201
C1510 1uF +/-20% DC 6.3V CAP0201
write:0xEE, read:0xEF
PRESSURE
VREG_LVS2A_1P8
TP1522 TP0.3mm
R1514 NM 0201
U1510
AK09915
C1506 0.1uF +/-10% 25V 0201
C1745 1uF +/-20% DC 6.3V CAP0201
<14> SPI_CS_N_MAG
<14> SENSOR_RESET_N
<14,35> SSC_SPI_1_CLK
<14,35> SSC_SPI_1_MOSI
SSC_SPI_1_MISO <14,35>
COMPASS_INT <14>
COMPASS
VREG_LVS2A_1P8
C1525 4.7uF +/-20% 6.3V 0201
C1542 100N 0201 6.3V ±10%
C1509 100N 0201 6.3V ±10%
U1500
LSM6DSLTR
<14> ACCEL_INT
<14> GYRO_INT
<14,35> SSC_SPI_1_MISO
<14,35> SSC_SPI_1_CLK
<14,35> SSC_SPI_1_MOSI
TP1521 TP0.3mm
SSC_SPI_1_CS_N <14>
TP1518 TP0.3mm
TP1519 TP0.3mm
TP1520 TP0.3mm
G+G
VREG_S4A_1P8
HALL
R1505 NM 0201
R1506 NM 0201
U1503
AKM8789
C1547 100N 0201 16V ±10%
HALL_INTR1 <14>
HALL_INTR2 <14>
VREG_L13A_2P95
U1517_NM
SSX1207-32
C1502 0.1uF +/-10% 6.3V 0201
C1503 4.7uF +/-20% 6.3V 0201
C1504 0.1uF +/-10% 6.3V 0201
C1507 0.1uF 0201 6.3V +/-10%
R1502 NM 0201
SDDAT0 <13>
SDDAT1 <13>
SDDAT2 <13>
SDDAT3 <13>
SDCLK <13>
SDCMD <13>
DS1101
19-337/R6GHBHC-A01/2T
<20> GREEN_LED_DRV
<20> RED_LED_DRV
<20> BLUE_LED_DRV
C1100 NM 0201
C1115 NM 0201
C1118 NM 0201
RGB
SENSOR
Title B7
Size A3
Document Number SENSOR
Rev P0
Date:
Sheet 35 of 35