http://hobi-elektronika.net

MODEL NAME : *PAP00*

PCB NO : *LA-6961P (DA**********)*

BOM P/N : *TBD*

Dell/Compal Confidential

Schematic Document

Phantom(Huron River)

Sandy Bridge(BGA1023) + Cougar Point(SFF)

DISCRETE VGA N12P-GS(optimus)

2010-11-29

Rev: 0.4

Security Classification	Compal Secret Data		
Issued Date	2010/07/06	Deciphered Date	2011/07/06

THIS SHEET OF ENGINEERING DRAWING IS THE PROPRIETARY PROPERTY OF COMPAL ELECTRONICS, INC. AND CONTAINS CONFIDENTIAL AND TRADE SECRET INFORMATION. THIS SHEET MAY NOT BE TRANSFERED FROM THE CUSTODY OF THE COMPETENT DIVISION OF R&D DEPARTMENT EXCEPT AS AUTHORIZED BY COMPAL ELECTRONICS, INC. NEITHER THIS SHEET NOR THE INFORMATION IT CONTAINS MAY BE USED BY OR DISCLOSED TO ANY THIRD PARTY WITHOUT PRIOR WRITTEN CONSENT OF COMPAL ELECTRONICS, INC.

Compal Electronics, Inc.

Title: *Cover Page*

Size | Document Number: *LA-6961P* | Rev: 0.4

Date: Monday, January 24, 2011 | Sheet 1 of 54

Compal Confidential

http://hobi-elektronika.net

Project Code : PAP00
File Name : LA-6961P

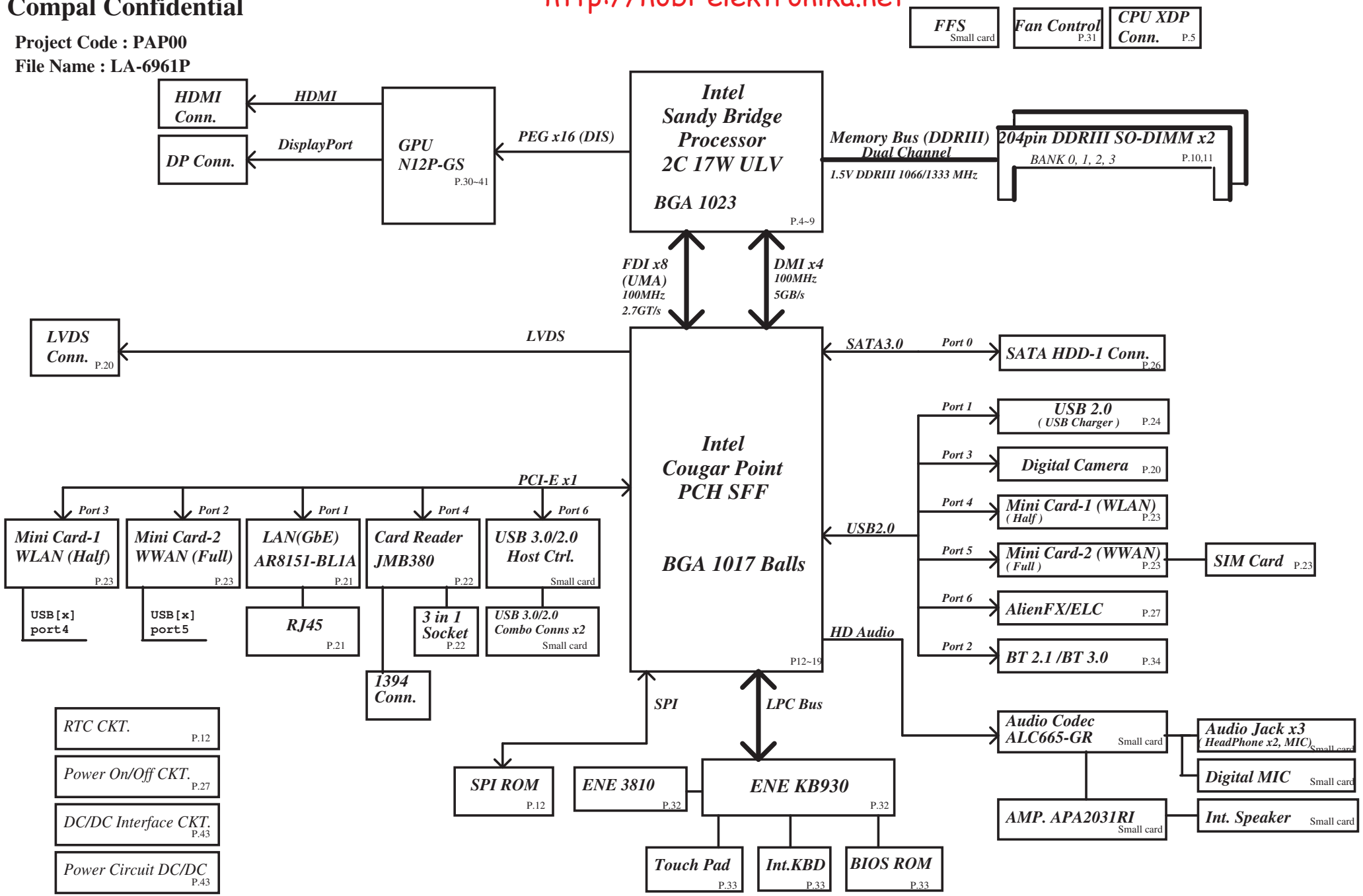

Security Classification	Compal Secret Data		
Issued Date	2010/06/10	Deciphered Date	2011/07/06

THIS SHEET OF ENGINEERING DRAWING IS THE PROPRIETARY PROPERTY OF COMPAL ELECTRONICS, INC. AND CONTAINS CONFIDENTIAL AND TRADE SECRET INFORMATION. THIS SHEET MAY NOT BE TRANSFERED FROM THE CUSTODY OF THE COMPETENT DIVISION OF R&D DEPARTMENT EXCEPT AS AUTHORIZED BY COMPAL ELECTRONICS, INC. NEITHER THIS SHEET NOR THE INFORMATION IT CONTAINS MAY BE USED BY OR DISCLOSED TO ANY THIRD PARTY WITHOUT PRIOR WRITTEN CONSENT OF COMPAL ELECTRONICS, INC.

Compal Electronics, Inc.

Title: **PCH (6/8) PWR**

Size: B | Document Number | Rev: 0.4

Date: Monday, January 24, 2011 | Sheet 2 of 54

http://hobi-elektronika.net

Board ID Table for AD channel

Vcc	3.3V +/- 5%
Ra	100K +/- 5%

Board ID	Rb	V_{AD_BID} min	V_{AD_BID} typ	V_{AD_BID} max	EC AD3
0	0	0 V	0 V	0.155 V	0x00-0x0C
1	8.2K +/- 5%	0.168 V	0.250 V	0.362 V	0x0D-0x1C
2	18K +/- 5%	0.375 V	0.503 V	0.621 V	0x1D-0x30
3	33K +/- 5%	0.634 V	0.819 V	0.945 V	0x31-0x49
4	56K +/- 5%	0.958 V	1.185 V	1.359 V	0x4A-0x69
5	100K +/- 5%	1.372 V	1.650 V	1.838 V	0x6A-0x8E
6	200K +/- 5%	1.851 V	2.200 V	2.420 V	0x8F-0xBB
7	NC	2.433 V	3.300 V	3.300 V	0xBC-0xFF

BOARD ID Table

Board ID	PCB Revision
0	0.1
1	0.2
2	0.3
3	0.4
4	0.5
5	
6	
7	

SMBUS Control Table

	SOURCE	MINI1	MINI2	BATT	SODIMM	Thermal Sensor 1	FFS	VGA Thermal Sensor	SMSC
EC_SMB_CK1 EC_SMB_DA1	KB930			V					
EC_SMB_CK2 EC_SMB_DA2	KB930								
PCH_SML0CLK PCH_SML0DATA	PCH								
PCH_SML1CLK PCH_SML1DATA	PCH	V	V			V		V	V
MEM_SMBCLK MEM_SMBDATA	PCH				V		V		

Link

	USB PORT#	DESTINATION
PCH	0	None
	1	JUSB1 (Ext Left Side)
	2	Bluetooth
	3	CAMERA
	4	JMINI1 (WLAN)
	5	JMINI2 (WWAN)
	6	ELC
	7	None
	8	None
	9	None
	10	None
	11	None
	12	None
	13	None

	DIFFERENTIAL	DESTINATION	FLEX CLOCKS	DESTINATION
CLK	CLKOUT_PCIE0	None	CLKOUTFLEX0	None
	CLKOUT_PCIE1	10/100/1G LAN	CLKOUTFLEX1	None
	CLKOUT_PCIE2	MINI CARD-2 WWAN	CLKOUTFLEX2	None
	CLKOUT_PCIE3	MINI CARD-1 WLAN	CLKOUTFLEX3	None
	CLKOUT_PCIE4	CARD READER		
	CLKOUT_PCIE5	None		
	CLKOUT_PCIE6	USB 3.0		
	CLKOUT_PCIE7	None		
	CLKOUT_PEG_B	None		

CLKOUT	DESTINATION
PCI0	PCH_LOOPBACK
PCI1	EC
PCI2	None
PCI3	None
PCI4	None

SATA	DESTINATION
SATA0	HDD
SATA1	None
SATA2	None
SATA3	None
SATA4	None
SATA5	None

PCI EXPRESS	DESTINATION
Lane 1	10/100/1G LAN
Lane 2	MINI CARD-2 WWAN/DMC
Lane 3	MINI CARD-1 WLAN
Lane 4	CARD READER and 1394
Lane 5	None
Lane 6	USB 3.0
Lane 7	None
Lane 8	None

Symbol Note :

: means Digital Ground

: means Analog Ground

Security Classification	Compal Secret Data		
Issued Date	2010/07/06	Deciphered Date	2011/07/06

THIS SHEET OF ENGINEERING DRAWING IS THE PROPRIETARY PROPERTY OF COMPAL ELECTRONICS, INC. AND CONTAINS CONFIDENTIAL AND TRADE SECRET INFORMATION. THIS SHEET MAY NOT BE TRANSFERED FROM THE CUSTODY OF THE COMPETENT DIVISION OF R&D DEPARTMENT EXCEPT AS AUTHORIZED BY COMPAL ELECTRONICS, INC. NEITHER THIS SHEET NOR THE INFORMATION IT CONTAINS MAY BE USED BY OR DISCLOSED TO ANY THIRD PARTY WITHOUT PRIOR WRITTEN CONSENT OF COMPAL ELECTRONICS, INC.

Compal Electronics, Inc.

Title: Notes List

Size | Document Number: LA-6961P | Rev: 0.4

Date: Monday, January 24, 2011 | Sheet 3 of 54

http://hobi-elektronika.net

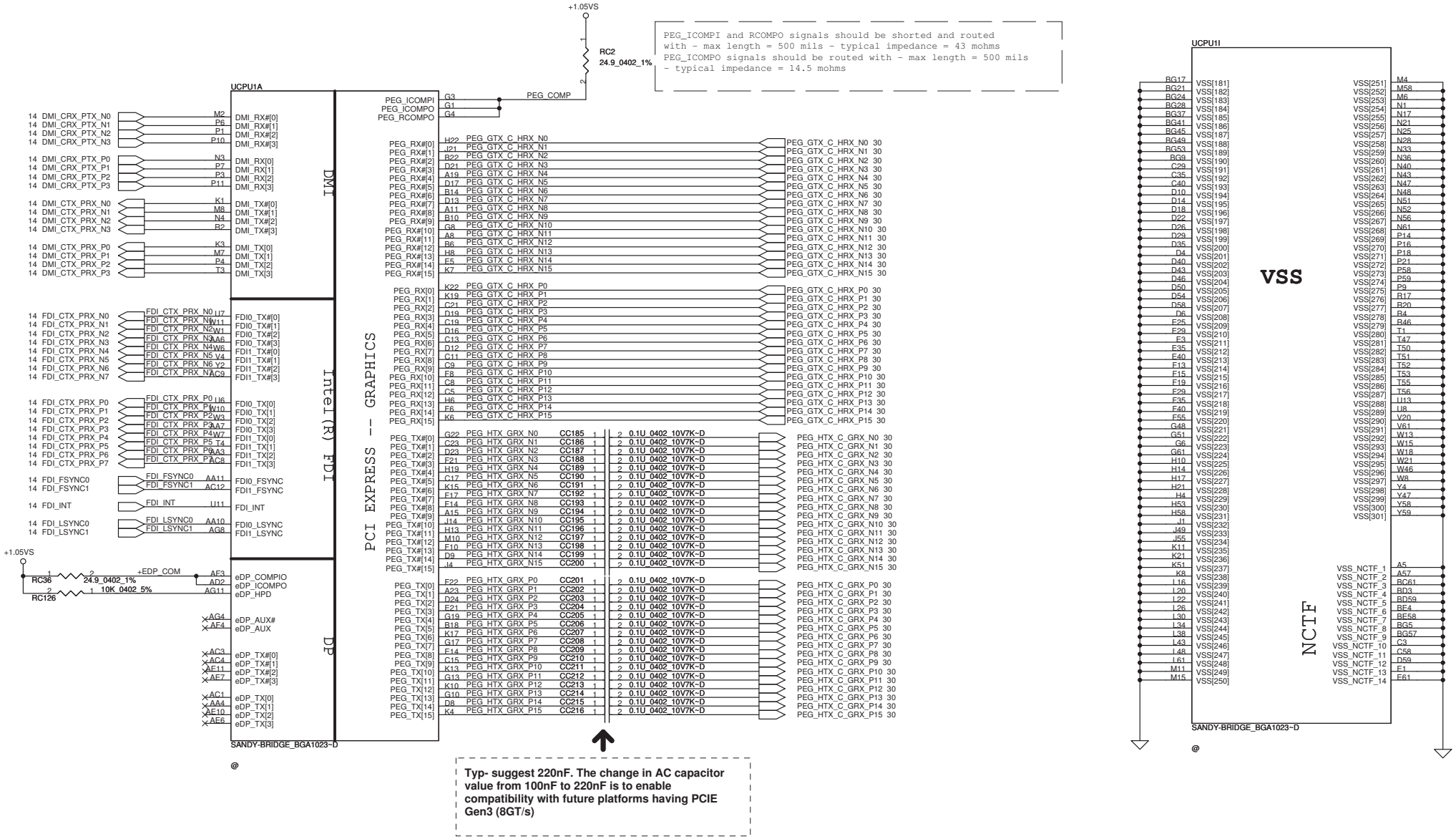

Typ- suggest 220nF. The change in AC capacitor value from 100nF to 220nF is to enable compatibility with future platforms having PCIE Gen3 (8GT/s)

Security Classification	Compal Secret Data		
Issued Date	2010/07/06	Deciphered Date	2011/07/06

THIS SHEET OF ENGINEERING DRAWING IS THE PROPRIETARY PROPERTY OF COMPAL ELECTRONICS, INC. AND CONTAINS CONFIDENTIAL AND TRADE SECRET INFORMATION. THIS SHEET MAY NOT BE TRANSFERED FROM THE CUSTODY OF THE COMPETENT DIVISION OF R&D DEPARTMENT EXCEPT AS AUTHORIZED BY COMPAL ELECTRONICS, INC. NEITHER THIS SHEET NOR THE INFORMATION IT CONTAINS MAY BE USED BY OR DISCLOSED TO ANY THIRD PARTY WITHOUT PRIOR WRITTEN CONSENT OF COMPAL ELECTRONICS, INC.

Compal Electronics, Inc.

Title: **PROCESSOR(1/6) DMI,FDI,PEG**

Size: Document Number: **LA-6961P** Rev: 0.4

Date: Monday, January 24, 2011 Sheet 4 of 54

http://hobi-elektronika.net

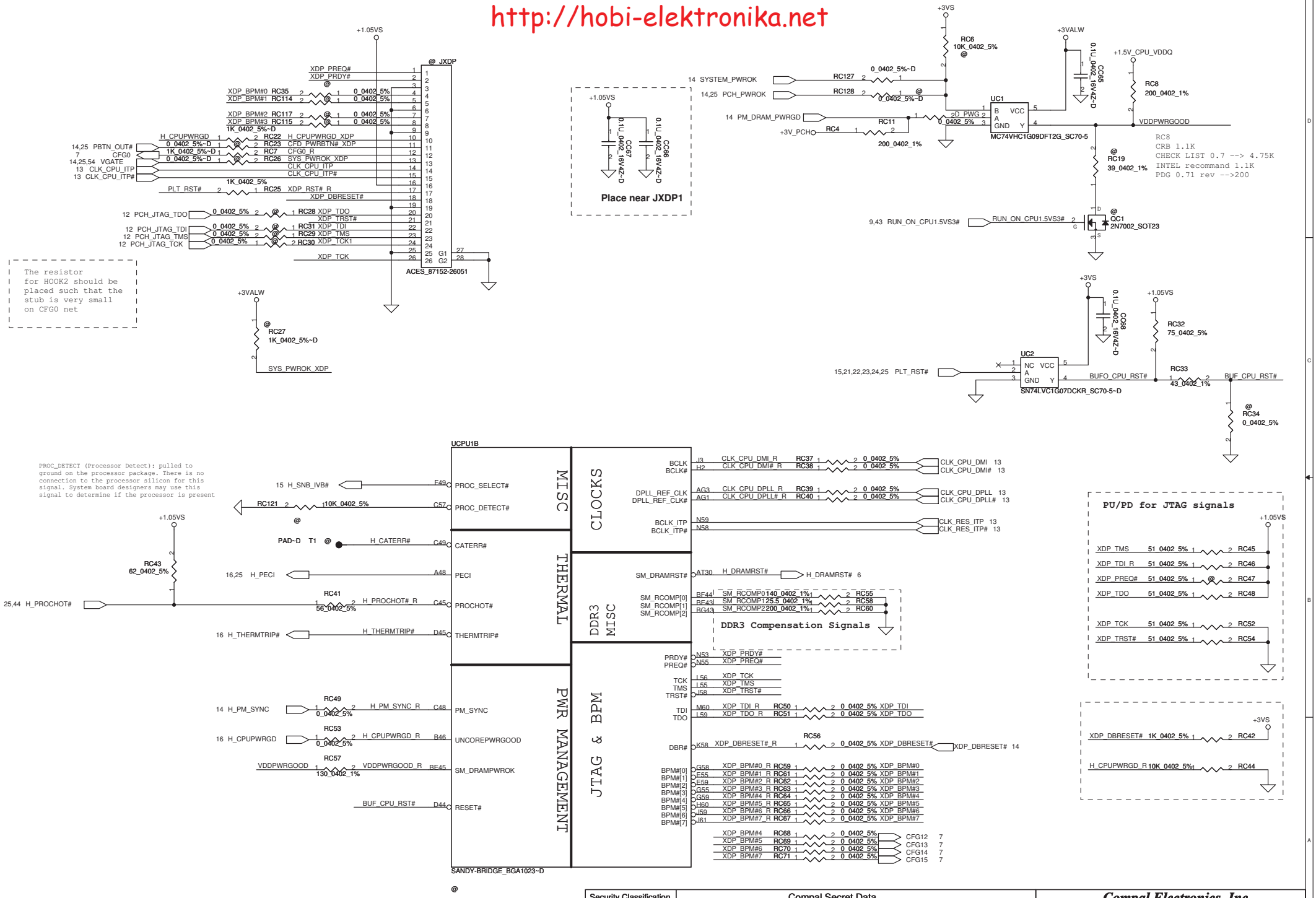

Security Classification	Compal Secret Data		
Issued Date	2010/07/06	Deciphered Date	2011/07/06

THIS SHEET OF ENGINEERING DRAWING IS THE PROPRIETARY PROPERTY OF COMPAL ELECTRONICS, INC. AND CONTAINS CONFIDENTIAL AND TRADE SECRET INFORMATION. THIS SHEET MAY NOT BE TRANSFERED FROM THE CUSTODY OF THE COMPETENT DIVISION OF R&D DEPARTMENT EXCEPT AS AUTHORIZED BY COMPAL ELECTRONICS, INC. NEITHER THIS SHEET NOR THE INFORMATION IT CONTAINS MAY BE USED BY OR DISCLOSED TO ANY THIRD PARTY WITHOUT PRIOR WRITTEN CONSENT OF COMPAL ELECTRONICS, INC.

Compal Electronics, Inc.

Title: **PROCESSOR(2/6) PM,XDP,CLK**

Size: | Document Number: **LA-6961P** | Rev: 0.4

Date: Monday, January 24, 2011 | Sheet 5 of 54

http://hobi-elektronika.net

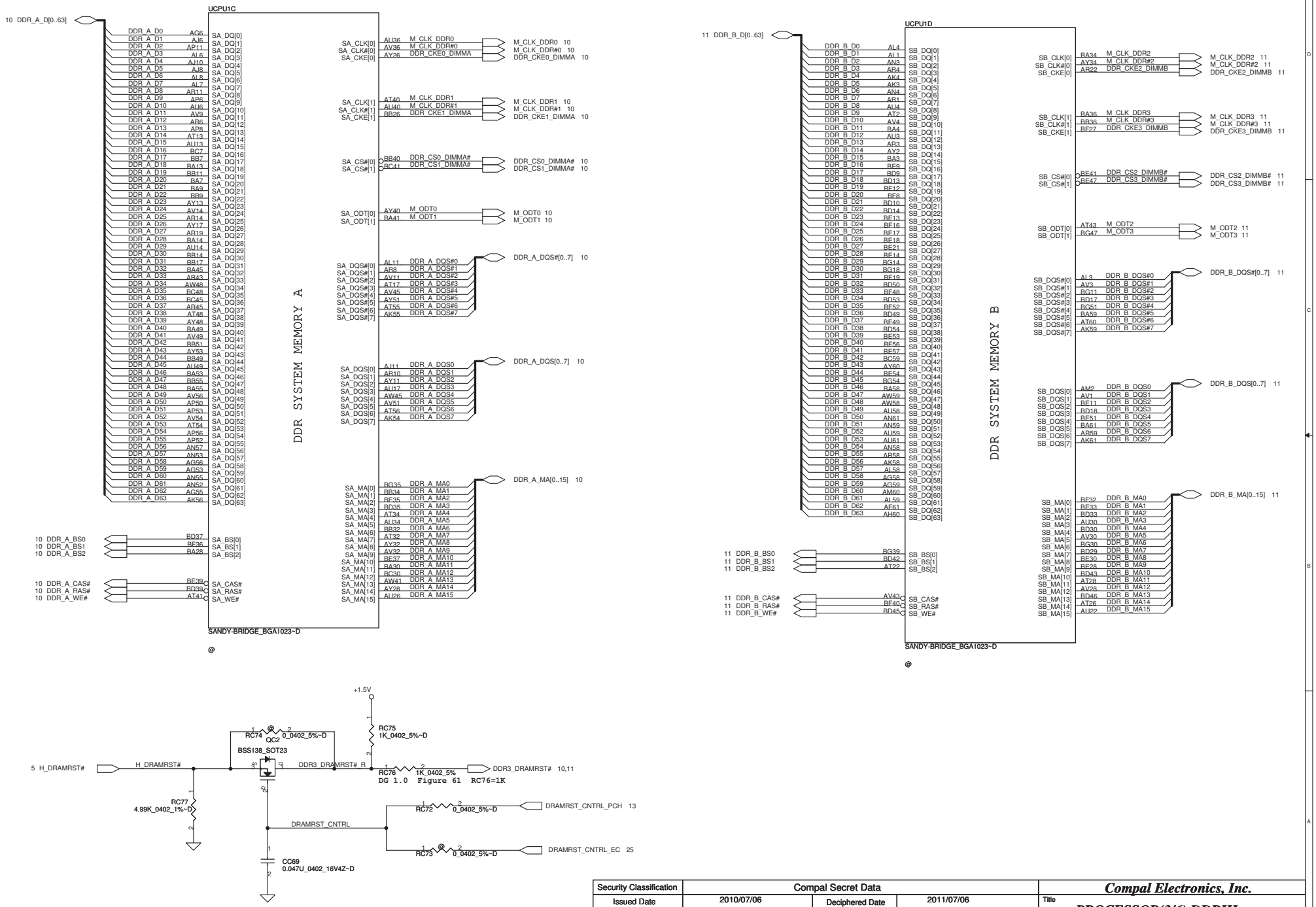

Security Classification	Compal Secret Data		
Issued Date	2010/07/06	Deciphered Date	2011/07/06

THIS SHEET OF ENGINEERING DRAWING IS THE PROPRIETARY PROPERTY OF COMPAL ELECTRONICS, INC. AND CONTAINS CONFIDENTIAL AND TRADE SECRET INFORMATION. THIS SHEET MAY NOT BE TRANSFERED FROM THE CUSTODY OF THE COMPETENT DIVISION OF R&D DEPARTMENT EXCEPT AS AUTHORIZED BY COMPAL ELECTRONICS, INC. NEITHER THIS SHEET NOR THE INFORMATION IT CONTAINS MAY BE USED BY OR DISCLOSED TO ANY THIRD PARTY WITHOUT PRIOR WRITTEN CONSENT OF COMPAL ELECTRONICS, INC.

Compal Electronics, Inc.

Title: **PROCESSOR(3/6) DDRIII**

Size | Document Number: **LA-6961P** | Rev: 0.4

Date: Monday, January 24, 2011 | Sheet 6 of 54

http://hobi-elektronika.net

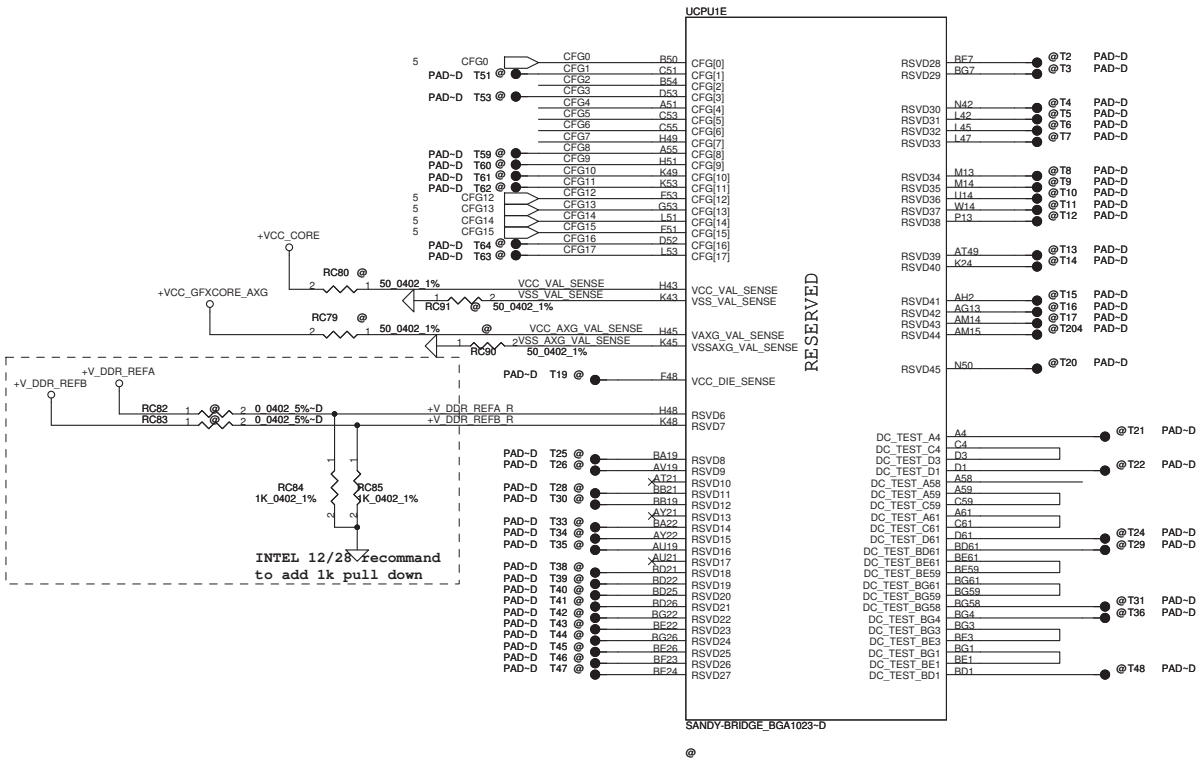

CFG Straps for Processor

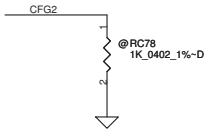

PEG Static Lane Reversal - CFG2 is for the 16x	
CFG2	*1:(Default) Normal Operation; Lane # definition matches socket pin map definition 0:Lane Reversed

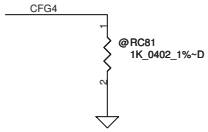

Display Port Presence Strap	
CFG4	* 1 : Disabled; No Physical Display Port attached to Embedded Display Port 0 : Enabled; An external Display Port device is connected to the Embedded Display Port

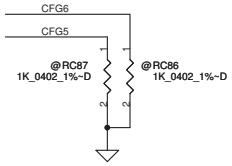

PCIE Port Bifurcation Straps	
CFG[6:5]	*11: (Default) x16 - Device 1 functions 1 and 2 disabled 10: x8, x8 - Device 1 function 1 enabled ; function 2 disabled 01: Reserved - (Device 1 function 1 disabled ; function 2 enabled) 00: x8,x4,x4 - Device 1 functions 1 and 2 enabled

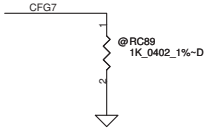

PEG DEFER TRAINING	
CFG7	*1: (Default) PEG Train immediately following xxRESETB de assertion 0: PEG Wait for BIOS for training

Security Classification	Compal Secret Data		
Issued Date	2010/07/06	Deciphered Date	2011/07/06

THIS SHEET OF ENGINEERING DRAWING IS THE PROPRIETARY PROPERTY OF COMPAL ELECTRONICS, INC. AND CONTAINS CONFIDENTIAL AND TRADE SECRET INFORMATION. THIS SHEET MAY NOT BE TRANSFERED FROM THE CUSTODY OF THE COMPETENT DIVISION OF R&D DEPARTMENT EXCEPT AS AUTHORIZED BY COMPAL ELECTRONICS, INC. NEITHER THIS SHEET NOR THE INFORMATION IT CONTAINS MAY BE USED BY OR DISCLOSED TO ANY THIRD PARTY WITHOUT PRIOR WRITTEN CONSENT OF COMPAL ELECTRONICS, INC.

Compal Electronics, Inc.

Title: PROCESSOR(4/6) RSVD,CFG

Size | Document Number: LA-6961P | Rev: 0.4

Date: Monday, January 24, 2011 | Sheet 7 of 54

http://hobi-elektronika.net

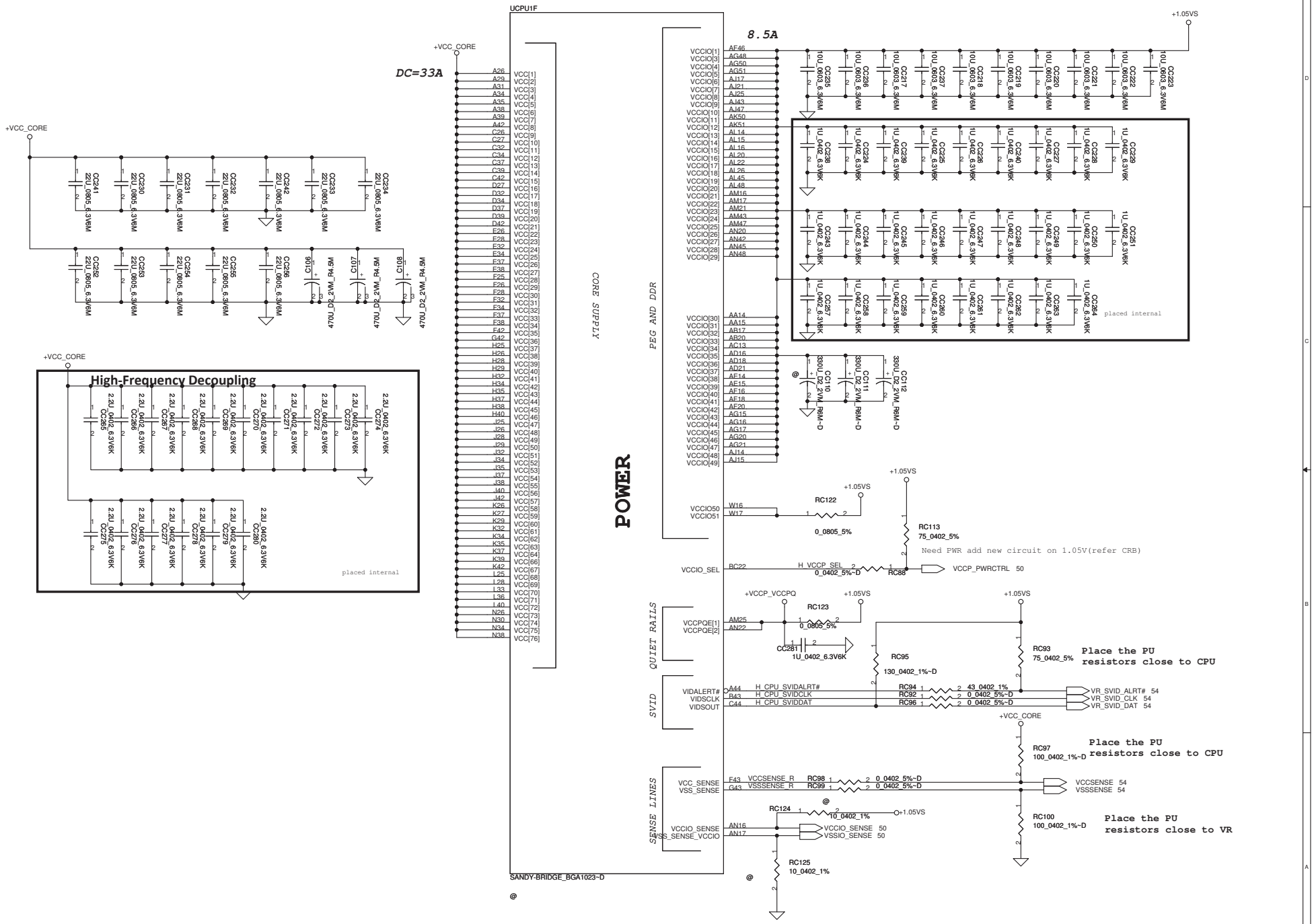

Security Classification	Compal Secret Data		
Issued Date	2010/07/06	Deciphered Date	2011/07/06

THIS SHEET OF ENGINEERING DRAWING IS THE PROPRIETARY PROPERTY OF COMPAL ELECTRONICS, INC. AND CONTAINS CONFIDENTIAL AND TRADE SECRET INFORMATION. THIS SHEET MAY NOT BE TRANSFERED FROM THE CUSTODY OF THE COMPETENT DIVISION OF R&D DEPARTMENT EXCEPT AS AUTHORIZED BY COMPAL ELECTRONICS, INC. NEITHER THIS SHEET NOR THE INFORMATION IT CONTAINS MAY BE USED BY OR DISCLOSED TO ANY THIRD PARTY WITHOUT PRIOR WRITTEN CONSENT OF COMPAL ELECTRONICS, INC.

Compal Electronics, Inc.

Title: **PROCESSOR(5/6) PWR,BYPASS**

Size | Document Number: **LA-6961P** | Rev: 0.4

Date: Monday, January 24, 2011 | Sheet 8 of 54

http://hobi-elektronika.net

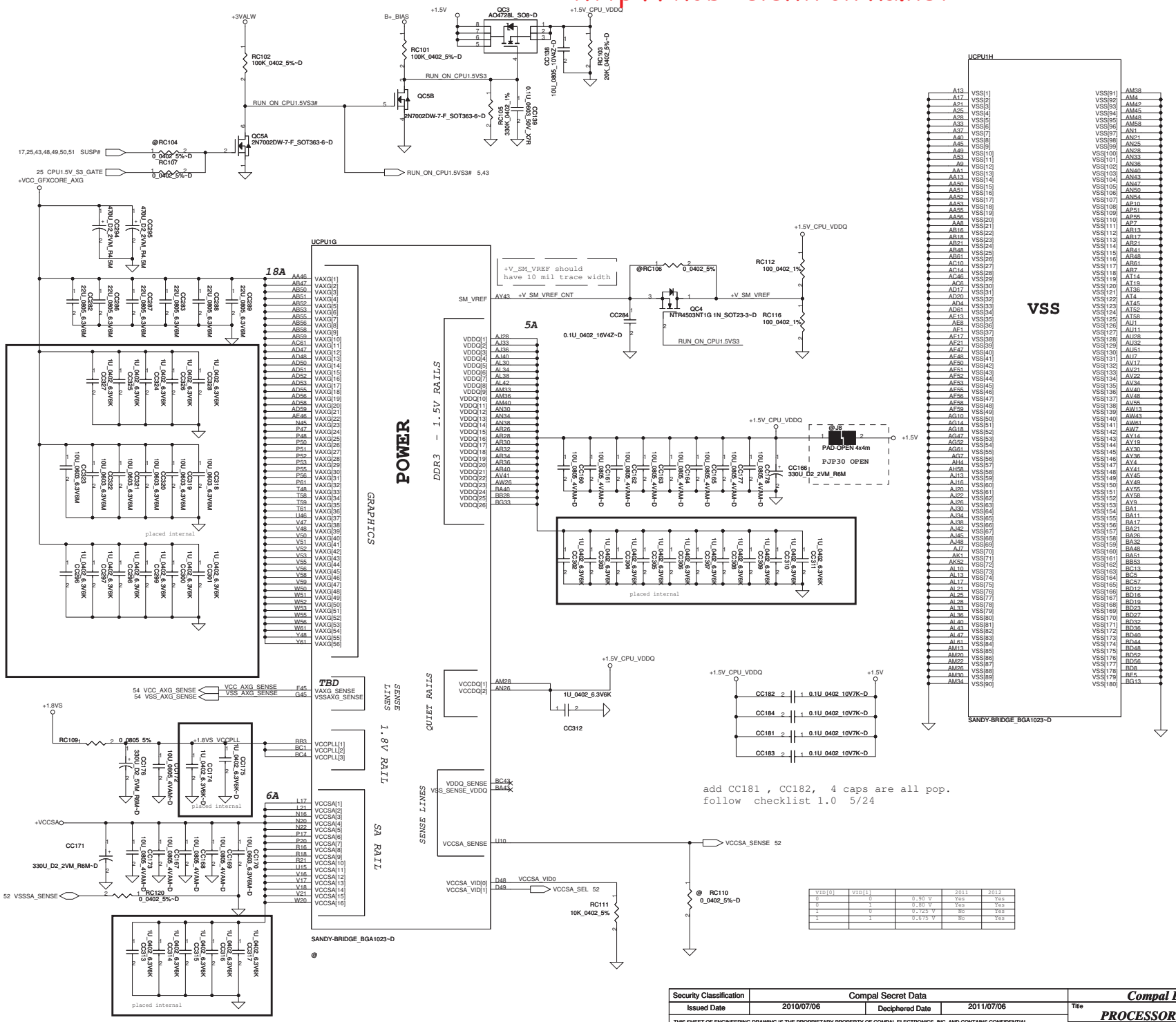

add CC181 , CC182, 4 caps are all pop.
follow checklist 1.0 5/24

VID[0]	VID[1]		2011	2012
0	0	0.90 V	Yes	Yes
0	1	0.80 V	Yes	Yes
1	0	0.725 V	No	Yes
1	1	0.675 V	No	Yes

Security Classification	Compal Secret Data		Compal Electronics, Inc.
Issued Date	2010/07/06	Deciphered Date 2011/07/06	Title PROCESSOR(6/6) PWR,VSS
			Size Document Number LA-6961P Rev 0.4
			Date: Monday, January 24, 2011 Sheet 9 of 54

THIS SHEET OF ENGINEERING DRAWING IS THE PROPRIETARY PROPERTY OF COMPAL ELECTRONICS, INC. AND CONTAINS CONFIDENTIAL AND TRADE SECRET INFORMATION. THIS SHEET MAY NOT BE TRANSFERED FROM THE CUSTODY OF THE COMPETENT DIVISION OF R&D DEPARTMENT EXCEPT AS AUTHORIZED BY COMPAL ELECTRONICS, INC. NEITHER THIS SHEET NOR THE INFORMATION IT CONTAINS MAY BE USED BY OR DISCLOSED TO ANY THIRD PARTY WITHOUT PRIOR WRITTEN CONSENT OF COMPAL ELECTRONICS, INC.

http://hobi-elektronika.net

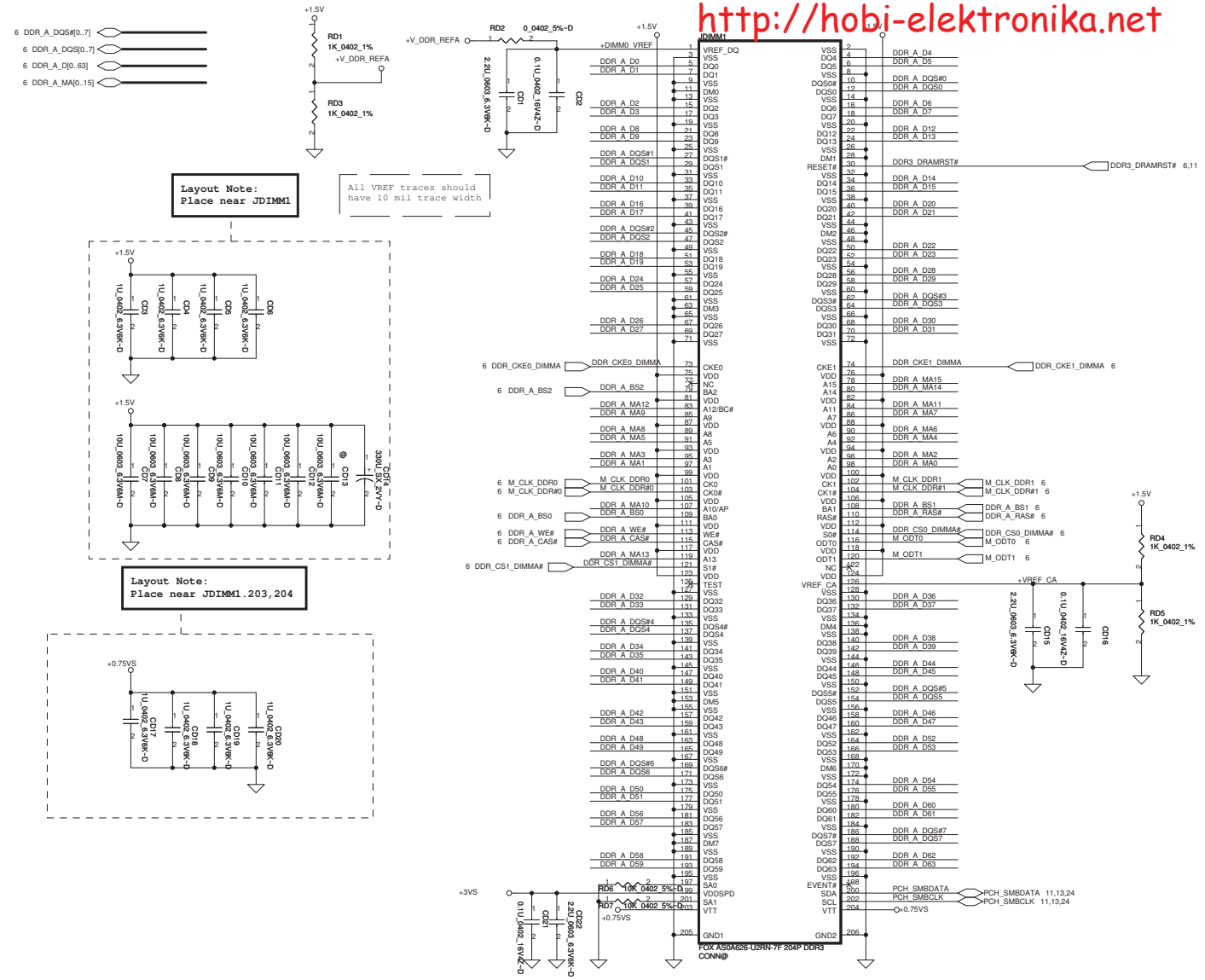

Security Classification	Compal Secret Data		
Issued Date	2010/07/06	Deciphered Date	2011/07/06

THIS SHEET OF ENGINEERING DRAWING IS THE PROPRIETARY PROPERTY OF COMPAL ELECTRONICS, INC. AND CONTAINS CONFIDENTIAL AND TRADE SECRET INFORMATION. THIS SHEET MAY NOT BE TRANSFERED FROM THE CUSTODY OF THE COMPETENT DIVISION OF R&D DEPARTMENT EXCEPT AS AUTHORIZED BY COMPAL ELECTRONICS, INC. NEITHER THIS SHEET NOR THE INFORMATION IT CONTAINS MAY BE USED BY OR DISCLOSED TO ANY THIRD PARTY WITHOUT PRIOR WRITTEN CONSENT OF COMPAL ELECTRONICS, INC.

Compal Electronics, Inc.

Title: **DDRIII DIMMA**

Size	Document Number	Rev
	LA-6961P	0.4

Date: Monday, January 24, 2011 | Sheet 10 of 54

http://hobi-elektronika.net

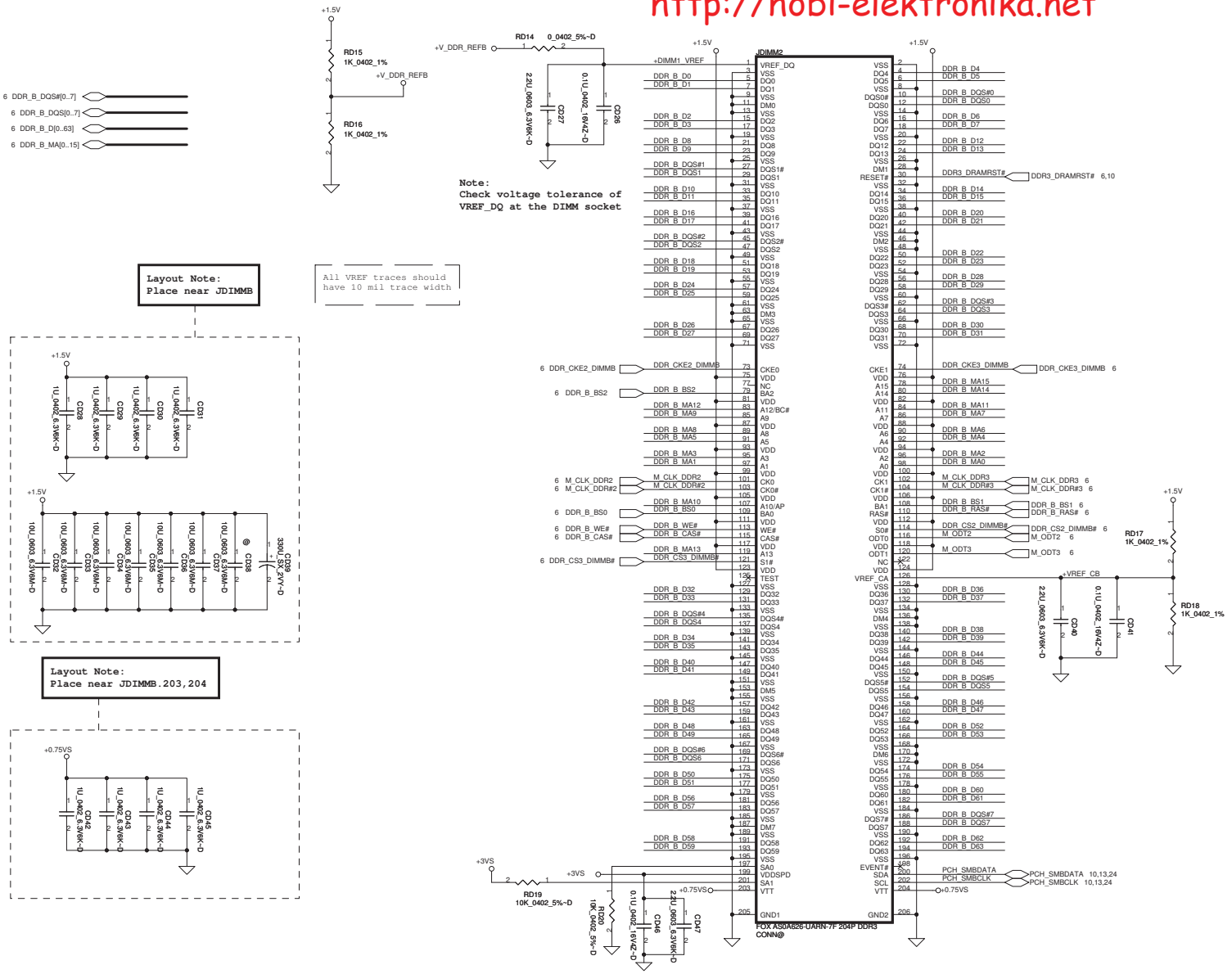

Security Classification	Compal Secret Data		
Issued Date	2010/07/06	Deciphered Date	2011/07/06

THIS SHEET OF ENGINEERING DRAWING IS THE PROPRIETARY PROPERTY OF COMPAL ELECTRONICS, INC. AND CONTAINS CONFIDENTIAL AND TRADE SECRET INFORMATION. THIS SHEET MAY NOT BE TRANSFERED FROM THE CUSTODY OF THE COMPETENT DIVISION OF R&D DEPARTMENT EXCEPT AS AUTHORIZED BY COMPAL ELECTRONICS, INC. NEITHER THIS SHEET NOR THE INFORMATION IT CONTAINS MAY BE USED BY OR DISCLOSED TO ANY THIRD PARTY WITHOUT PRIOR WRITTEN CONSENT OF COMPAL ELECTRONICS, INC.

Compal Electronics, Inc.

Title: **DDRIII DIMMB**

Size	Document Number	Rev
	LA-6961P	0.4

Date: Monday, January 24, 2011 | Sheet 11 of 54

http://hobi-elektronika.net

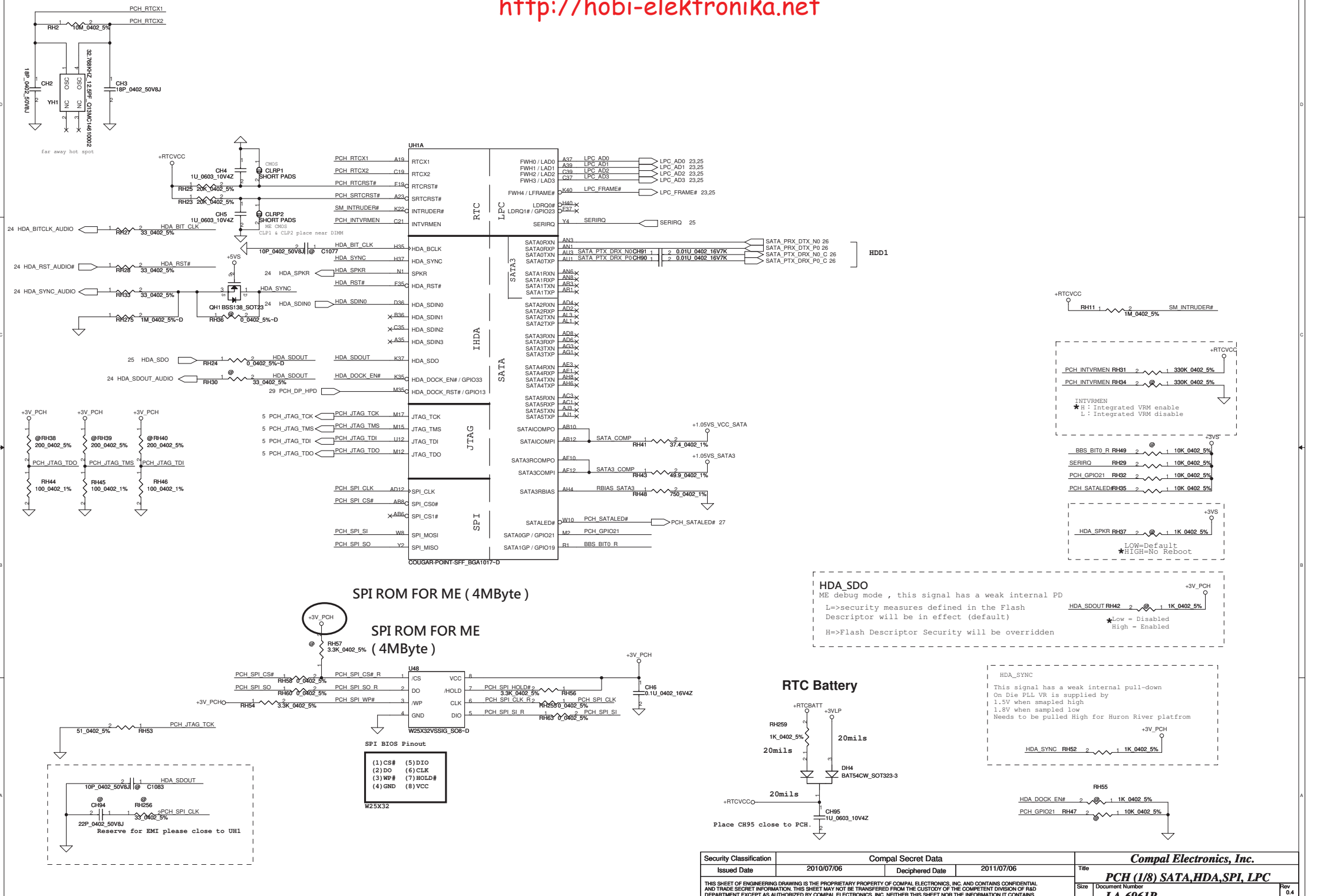

Security Classification	Compal Secret Data		
Issued Date	2010/07/06	Deciphered Date	2011/07/06

THIS SHEET OF ENGINEERING DRAWING IS THE PROPRIETARY PROPERTY OF COMPAL ELECTRONICS, INC. AND CONTAINS CONFIDENTIAL AND TRADE SECRET INFORMATION. THIS SHEET MAY NOT BE TRANSFERED FROM THE CUSTODY OF THE COMPETENT DIVISION OF R&D DEPARTMENT EXCEPT AS AUTHORIZED BY COMPAL ELECTRONICS, INC. NEITHER THIS SHEET NOR THE INFORMATION IT CONTAINS MAY BE USED BY OR DISCLOSED TO ANY THIRD PARTY WITHOUT PRIOR WRITTEN CONSENT OF COMPAL ELECTRONICS, INC.

Compal Electronics, Inc.

Title: **PCH (1/8) SATA,HDA,SPI, LPC**

Size: | Document Number: **LA-6961P** | Rev: 0.4

Date: Monday, January 24, 2011 | Sheet 12 of 54

http://hobi-elektronika.net

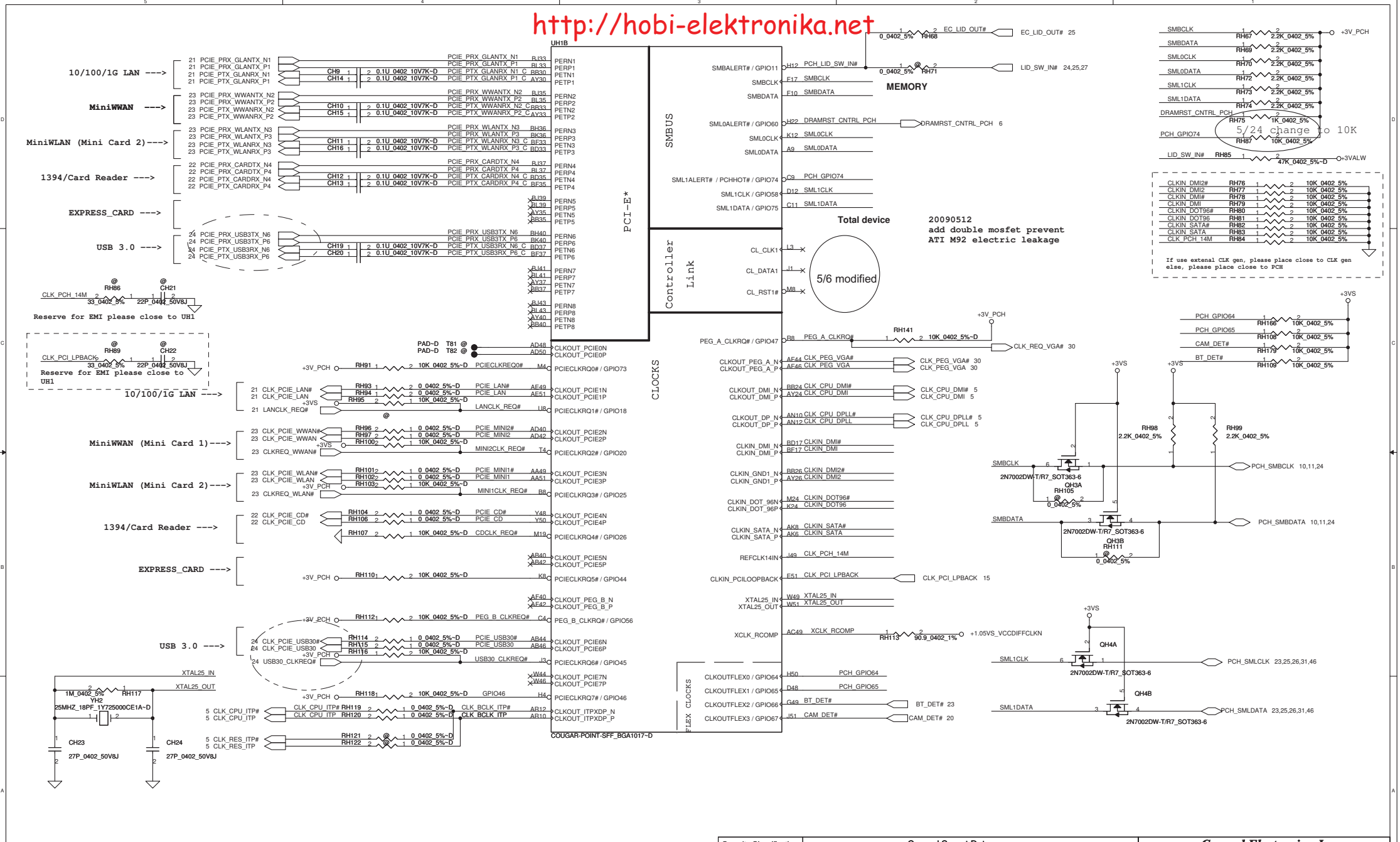

Security Classification	Compal Secret Data		
Issued Date	2010/07/06	Deciphered Date	2011/07/06

THIS SHEET OF ENGINEERING DRAWING IS THE PROPRIETARY PROPERTY OF COMPAL ELECTRONICS, INC. AND CONTAINS CONFIDENTIAL AND TRADE SECRET INFORMATION. THIS SHEET MAY NOT BE TRANSFERED FROM THE CUSTODY OF THE COMPETENT DIVISION OF R&D DEPARTMENT EXCEPT AS AUTHORIZED BY COMPAL ELECTRONICS, INC. NEITHER THIS SHEET NOR THE INFORMATION IT CONTAINS MAY BE USED BY OR DISCLOSED TO ANY THIRD PARTY WITHOUT PRIOR WRITTEN CONSENT OF COMPAL ELECTRONICS, INC.

Compal Electronics, Inc.

Title: **PCH (2/8) PCIE, SMBUS, CLK**

Size	Document Number	Rev
	LA-6961P	0.4

Date: Monday, January 24, 2011 | Sheet 13 of 54

http://hobi-elektronika.net

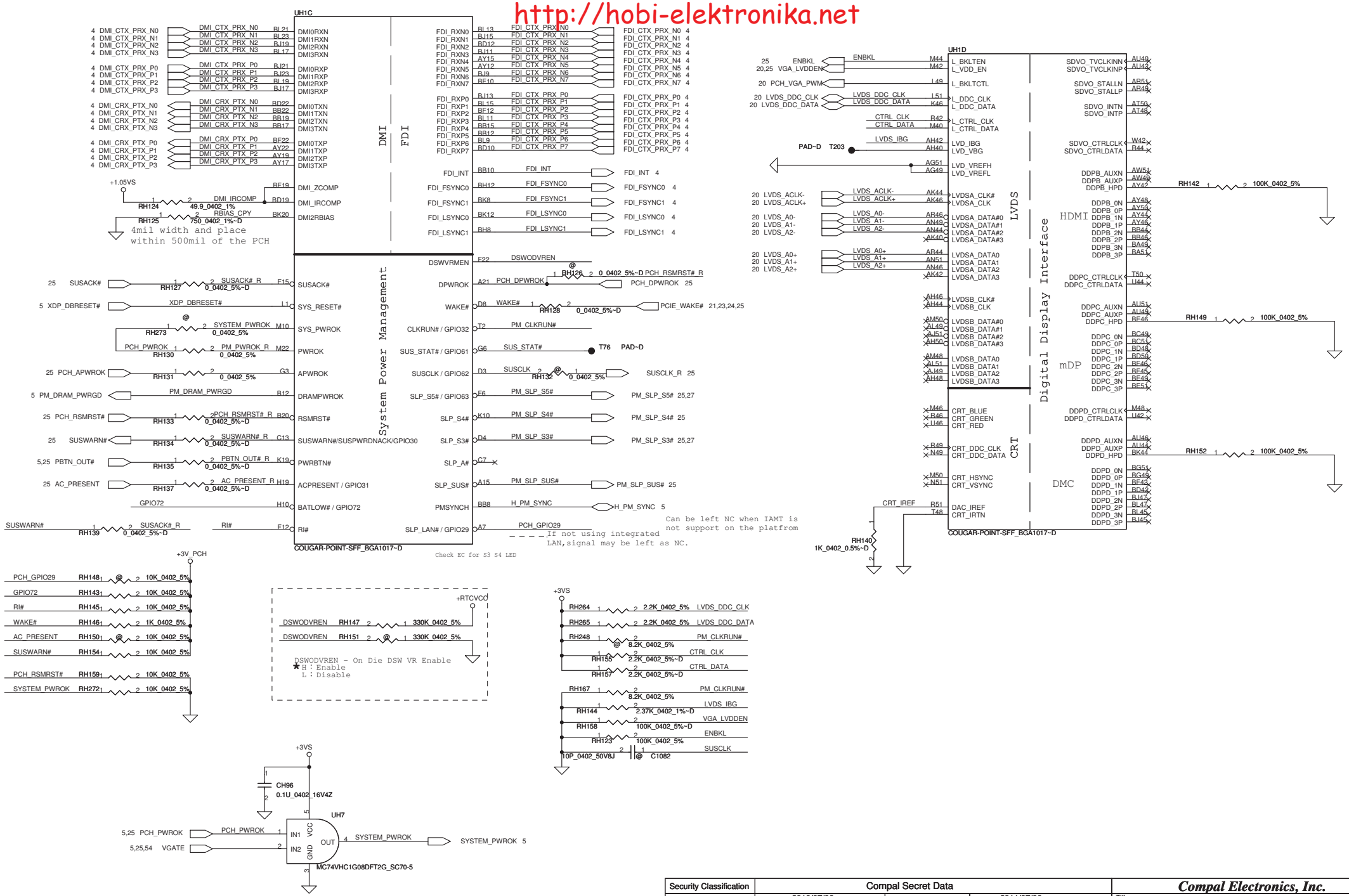

Security Classification	Compal Secret Data		
Issued Date	2010/07/06	Deciphered Date	2011/07/06

THIS SHEET OF ENGINEERING DRAWING IS THE PROPRIETARY PROPERTY OF COMPAL ELECTRONICS, INC. AND CONTAINS CONFIDENTIAL AND TRADE SECRET INFORMATION. THIS SHEET MAY NOT BE TRANSFERED FROM THE CUSTODY OF THE COMPETENT DIVISION OF R&D DEPARTMENT EXCEPT AS AUTHORIZED BY COMPAL ELECTRONICS, INC. NEITHER THIS SHEET NOR THE INFORMATION IT CONTAINS MAY BE USED BY OR DISCLOSED TO ANY THIRD PARTY WITHOUT PRIOR WRITTEN CONSENT OF COMPAL ELECTRONICS, INC.

Compal Electronics, Inc.

Title: **PCH (3/8) DMI,FDI,PM,GFX,DP**

Size | Document Number: **LA-6961P** | Rev: 0.4

Date: Monday, January 24, 2011 | Sheet 14 of 54

http://hobi-elektronika.net

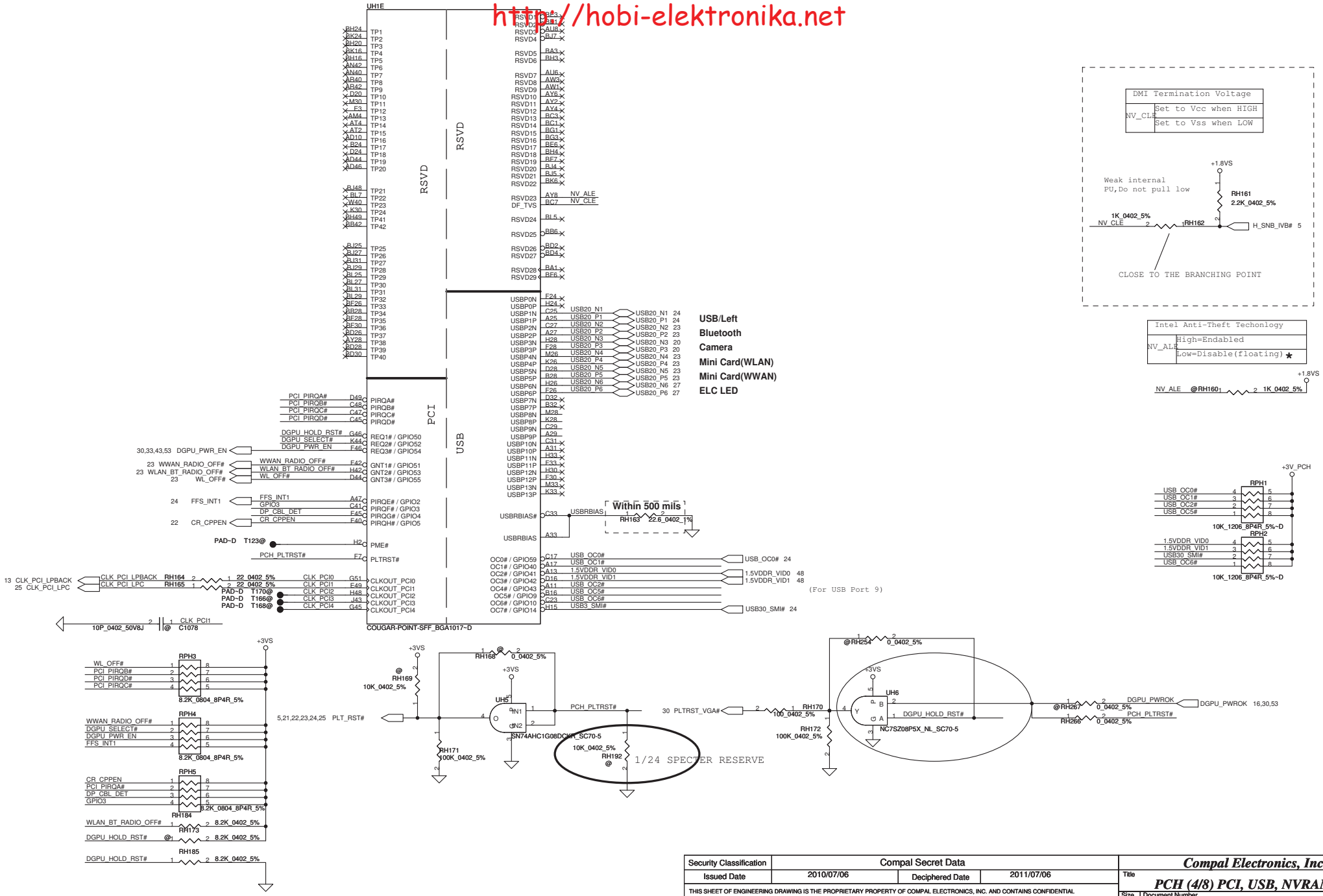

Security Classification	Compal Secret Data		
Issued Date	2010/07/06	Deciphered Date	2011/07/06

THIS SHEET OF ENGINEERING DRAWING IS THE PROPRIETARY PROPERTY OF COMPAL ELECTRONICS, INC. AND CONTAINS CONFIDENTIAL AND TRADE SECRET INFORMATION. THIS SHEET MAY NOT BE TRANSFERED FROM THE CUSTODY OF THE COMPETENT DIVISION OF R&D DEPARTMENT EXCEPT AS AUTHORIZED BY COMPAL ELECTRONICS, INC. NEITHER THIS SHEET NOR THE INFORMATION IT CONTAINS MAY BE USED BY OR DISCLOSED TO ANY THIRD PARTY WITHOUT PRIOR WRITTEN CONSENT OF COMPAL ELECTRONICS, INC.

Compal Electronics, Inc.

Title: **PCH (4/8) PCI, USB, NVRAM**

Size: | Document Number: **LA-6961P** | Rev: 0.4

Date: Tuesday, January 25, 2011 | Sheet 15 of 54

http://hobi-elektronika.net

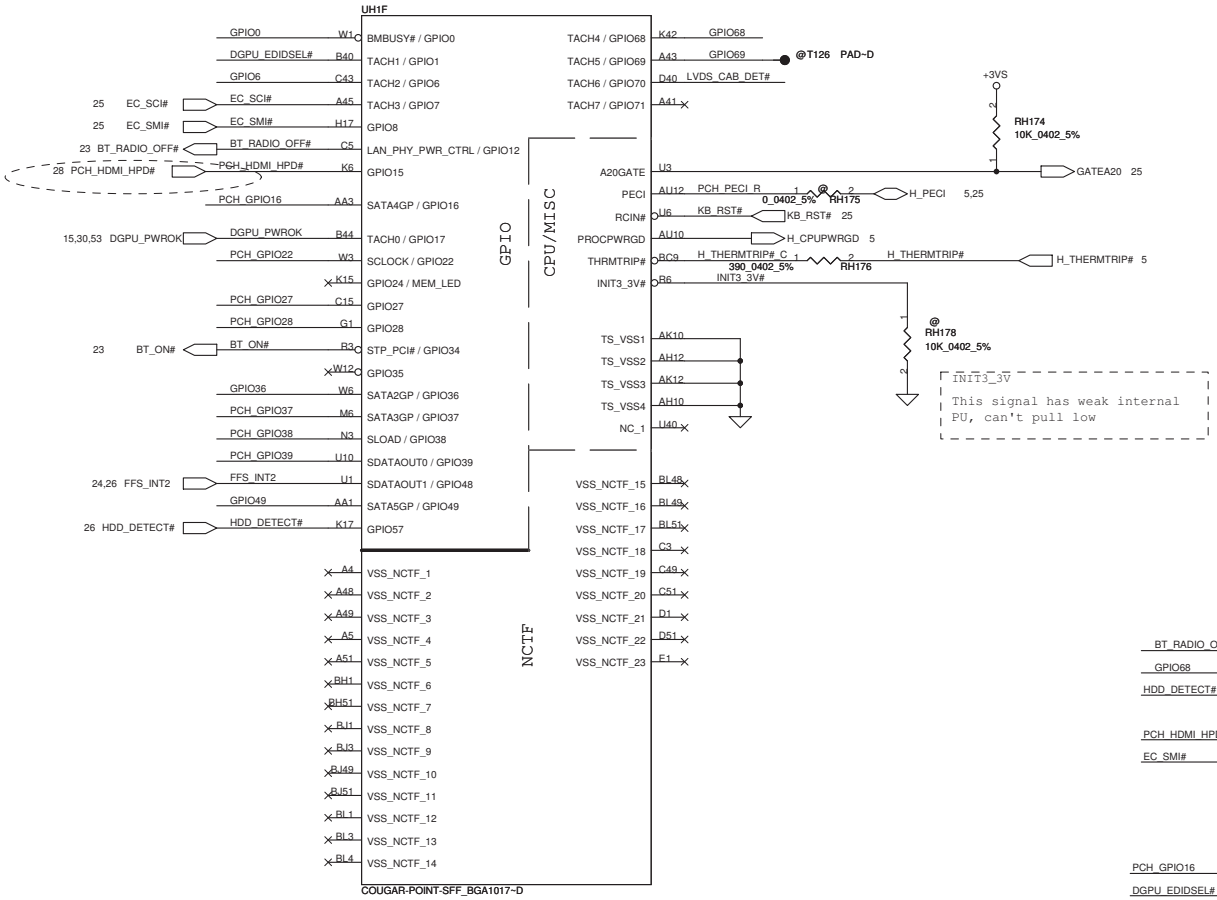

GPIO28
On-Die PLL Voltage Regulator
This signal has a weak internal pull up

★ H : On-Die voltage regulator enable
L : On-Die PLL Voltage Regulator disable

1 PCH_GPIO28 2 @RH177 1K_0402_5%~D

PCH_GPIO37
FDI TERMINATION VOLTAGE OVERRIDE

★ LOW - Tx, Rx terminated to same voltage (DC Coupling Mode)

+3VS
RH181 2 @ 1 1K_0402_5% PCH_GPIO37
RH182 2 1 PCH_GPIO37
100K_0402_5%

GPIO27
PCH_GPIO27 (Have internal Pull-High)
★High: VCCVRM VR Enable
Low: VCCVRM VR Disable

1 PCH_GPIO27 2 @RH186 10K_0402_5%

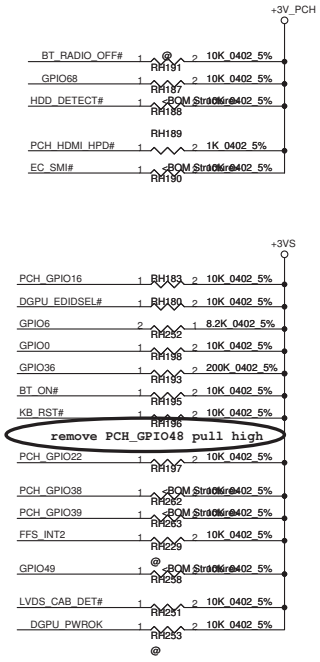

PCH_GPIO28 needs to be connected to XDP_FN8
PCH_GPIO35 needs to be connected to XDP_FN9
PCH_GPIO15 needs to be connected to XDP_FN16

Please refer to Huron River Debug Board DG 0.5

add RH185,RH229,RH251
5/25

Security Classification	Compal Secret Data		
Issued Date	2010/07/06	Deciphered Date	2011/07/06

THIS SHEET OF ENGINEERING DRAWING IS THE PROPRIETARY PROPERTY OF COMPAL ELECTRONICS, INC. AND CONTAINS CONFIDENTIAL AND TRADE SECRET INFORMATION. THIS SHEET MAY NOT BE TRANSFERED FROM THE CUSTODY OF THE COMPETENT DIVISION OF R&D DEPARTMENT EXCEPT AS AUTHORIZED BY COMPAL ELECTRONICS, INC. NEITHER THIS SHEET NOR THE INFORMATION IT CONTAINS MAY BE USED BY OR DISCLOSED TO ANY THIRD PARTY WITHOUT PRIOR WRITTEN CONSENT OF COMPAL ELECTRONICS, INC.

Compal Electronics, Inc.

Title: PCH (5/8) GPIO, CPU, MISC

Size | Document Number: LA-6961P | Rev: 0.4

Date: Monday, January 24, 2011 | Sheet 16 of 54

http://hobi-elektronika.net

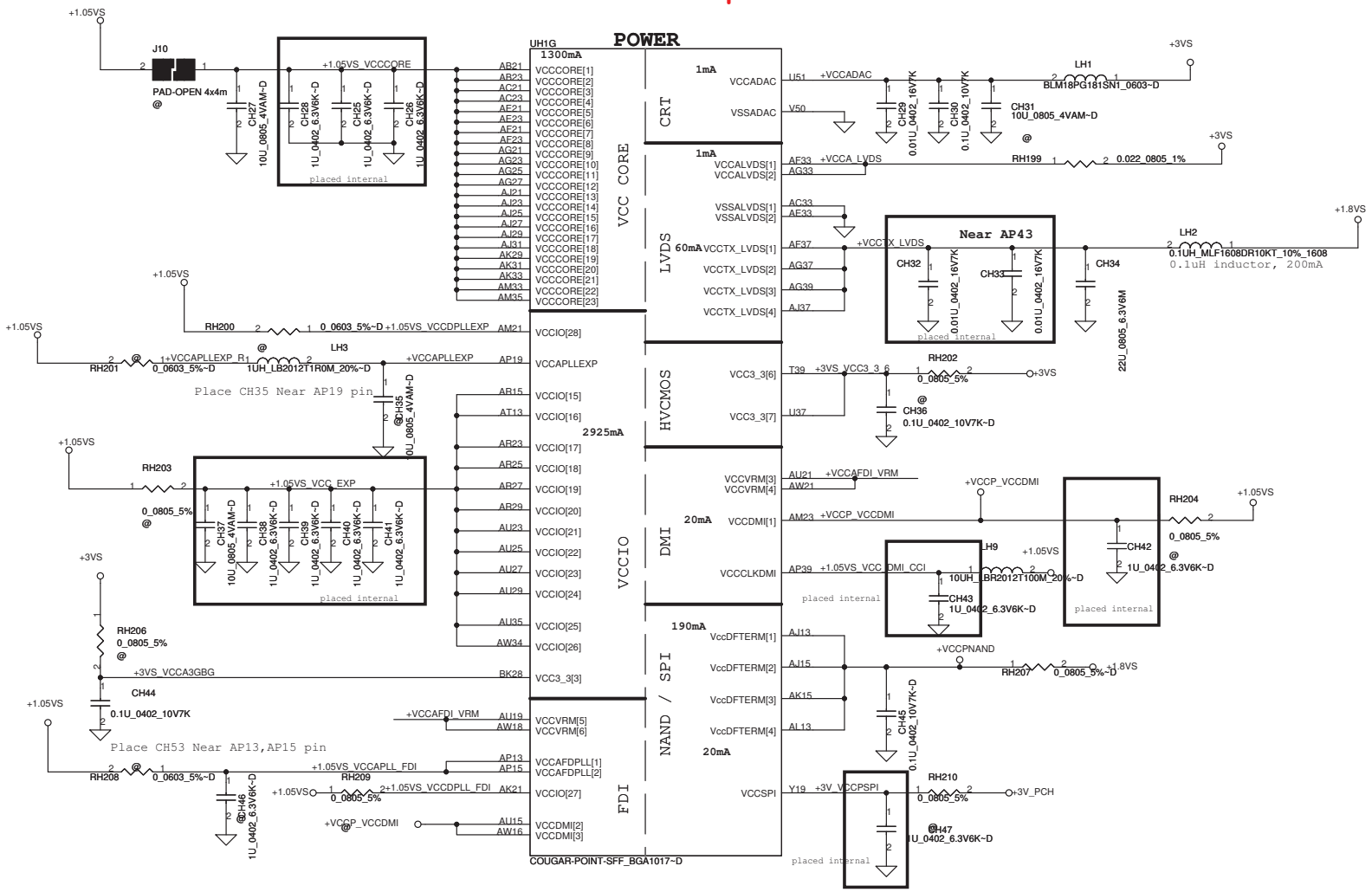

PCH Power Rail Table		
Voltage Rail	Voltage	S0 Iccmax Current (A)
V_PROC_IO	1.05	0.001
V5REF	5	0.001
V5REF_Sus	5	0.001
Vcc3_3	3.3	0.266
VccADAC	3.3	0.001
VccADPLLA	1.05	0.08
VccADPLLB	1.05	0.08
VccCore	1.05	1.3
VccDMI	1.05	0.042
VccIO	1.05	2.925
VccASW	1.05	1.01
VccSPI	3.3	0.02
VccDSW	3.3	0.003
VccpNAND	1.8	0.19
VccRTC	3.3	6 uA
VccSus3_3	3.3	0.119
VccSusHDA	3.3 / 1.5	0.01
VccVRM	1.8 / 1.5	0.16
VccCLKDMI	1.05	0.02
VccSSC	1.05	0.095
VccDIFFCLKN	1.05	0.055
VccALVDS	3.3	0.001
VccTX_LVDS	1.8	0.06

VCCVRM = 160mA detal waiting for newest spec

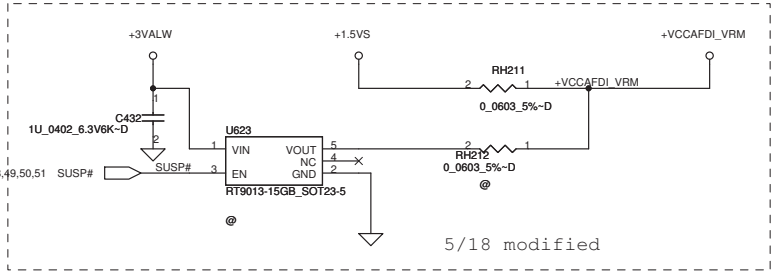

Security Classification	Compal Secret Data		
Issued Date	2010/07/06	Deciphered Date	2011/07/06

THIS SHEET OF ENGINEERING DRAWING IS THE PROPRIETARY PROPERTY OF COMPAL ELECTRONICS, INC. AND CONTAINS CONFIDENTIAL AND TRADE SECRET INFORMATION. THIS SHEET MAY NOT BE TRANSFERED FROM THE CUSTODY OF THE COMPETENT DIVISION OF R&D DEPARTMENT EXCEPT AS AUTHORIZED BY COMPAL ELECTRONICS, INC. NEITHER THIS SHEET NOR THE INFORMATION IT CONTAINS MAY BE USED BY OR DISCLOSED TO ANY THIRD PARTY WITHOUT PRIOR WRITTEN CONSENT OF COMPAL ELECTRONICS, INC.

Compal Electronics, Inc.

Title: PCH (6/8) PWR

Size: | Document Number: LA-6961P | Rev: 0.4

Date: Monday, January 24, 2011 | Sheet 17 of 54

http://hobi-elektronika.net

VCC3_3 = 266mA detal waiting for newest spec
VCCDMI = 42mA detal waiting for newest spec

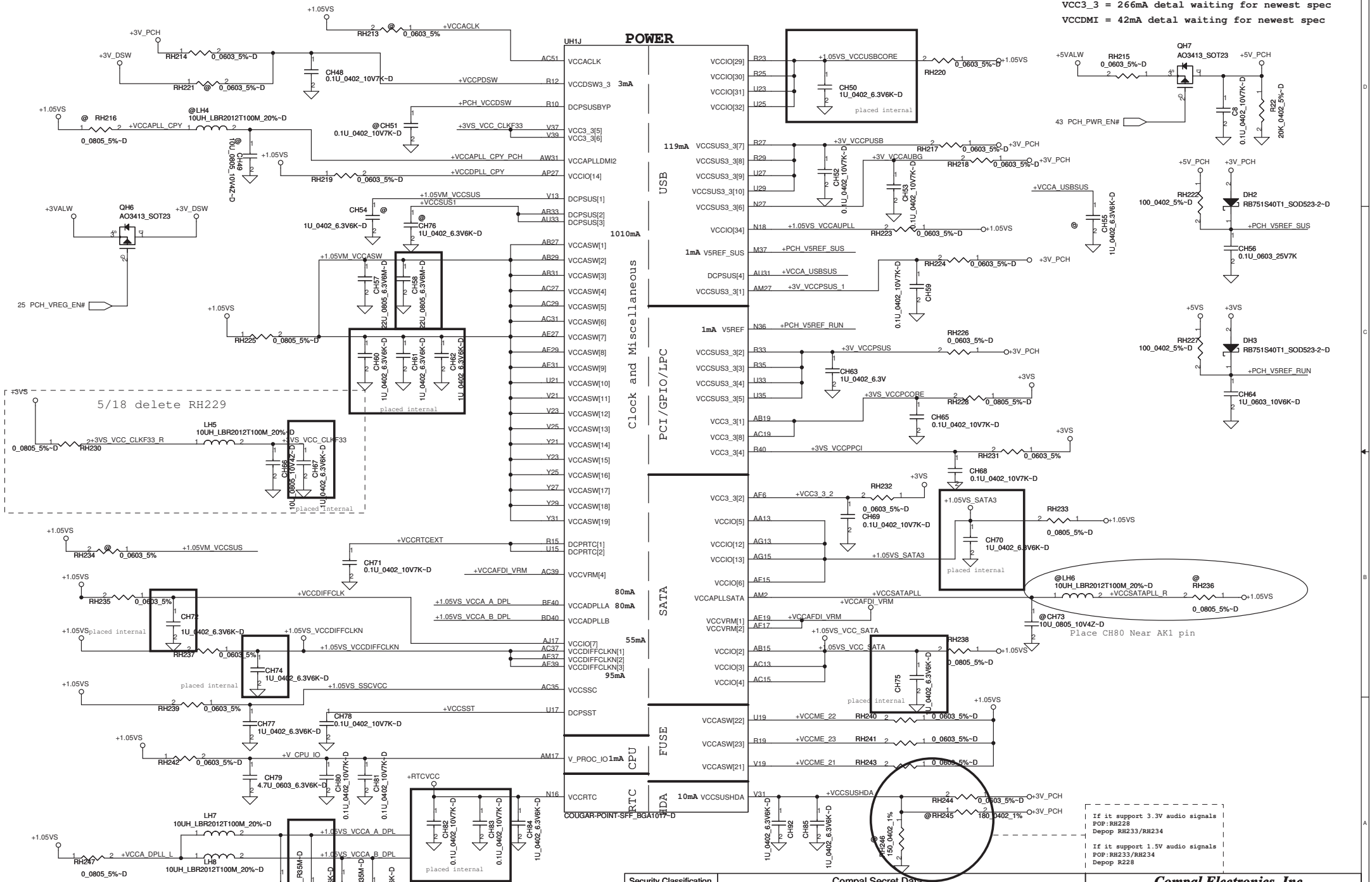

Security Classification	Compal Secret Data		
Issued Date	2010/07/06	Deciphered Date	2011/07/06

THIS SHEET OF ENGINEERING DRAWING IS THE PROPRIETARY PROPERTY OF COMPAL ELECTRONICS, INC. AND CONTAINS CONFIDENTIAL AND TRADE SECRET INFORMATION. THIS SHEET MAY NOT BE TRANSFERED FROM THE CUSTODY OF THE COMPETENT DIVISION OF R&D DEPARTMENT EXCEPT AS AUTHORIZED BY COMPAL ELECTRONICS, INC. NEITHER THIS SHEET NOR THE INFORMATION IT CONTAINS MAY BE USED BY OR DISCLOSED TO ANY THIRD PARTY WITHOUT PRIOR WRITTEN CONSENT OF COMPAL ELECTRONICS, INC.

Compal Electronics, Inc.

Title: **PCH (7/8) PWR**

Size: | Document Number: **LA-6961P** | Rev: 0.4

Date: Monday, January 24, 2011 | Sheet 18 of 54

http://hobi-elektronika.net

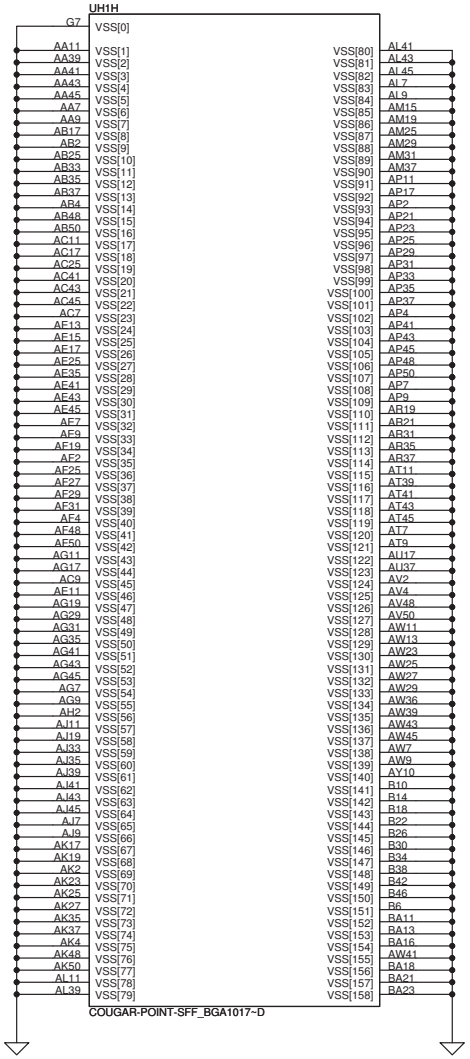

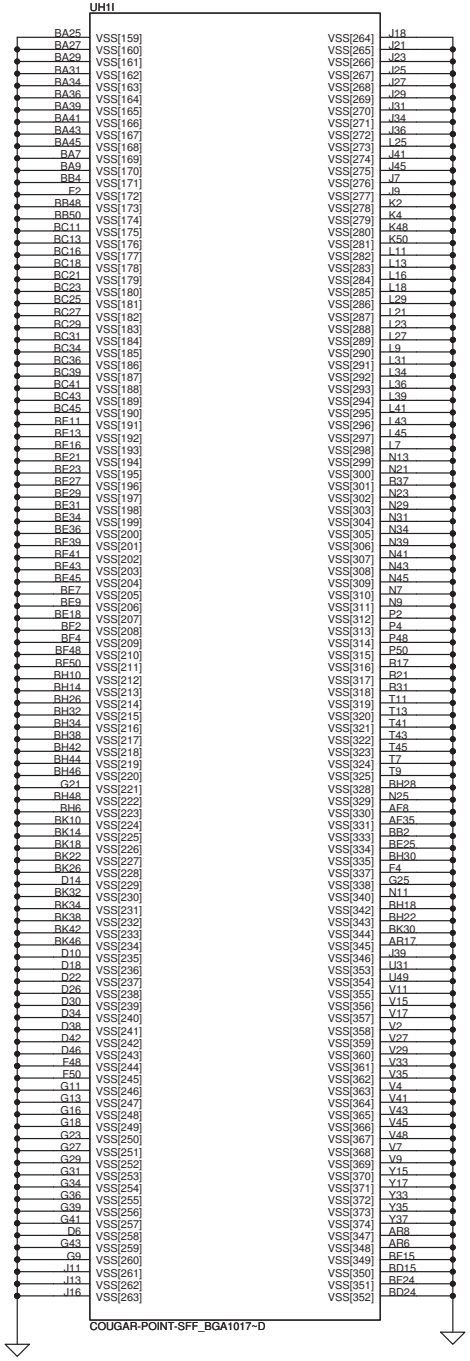

Security Classification	Compal Secret Data		
Issued Date	2010/07/06	Deciphered Date	2011/07/06

THIS SHEET OF ENGINEERING DRAWING IS THE PROPRIETARY PROPERTY OF COMPAL ELECTRONICS, INC. AND CONTAINS CONFIDENTIAL AND TRADE SECRET INFORMATION. THIS SHEET MAY NOT BE TRANSFERED FROM THE CUSTODY OF THE COMPETENT DIVISION OF R&D DEPARTMENT EXCEPT AS AUTHORIZED BY COMPAL ELECTRONICS, INC. NEITHER THIS SHEET NOR THE INFORMATION IT CONTAINS MAY BE USED BY OR DISCLOSED TO ANY THIRD PARTY WITHOUT PRIOR WRITTEN CONSENT OF COMPAL ELECTRONICS, INC.

Compal Electronics, Inc.

Title: **PCH (8/8) VSS**

Size: | Document Number: **LA-6961P** | Rev: 0.4

Date: Monday, January 24, 2011 | Sheet 19 of 54

http://hobi-elektronika.net

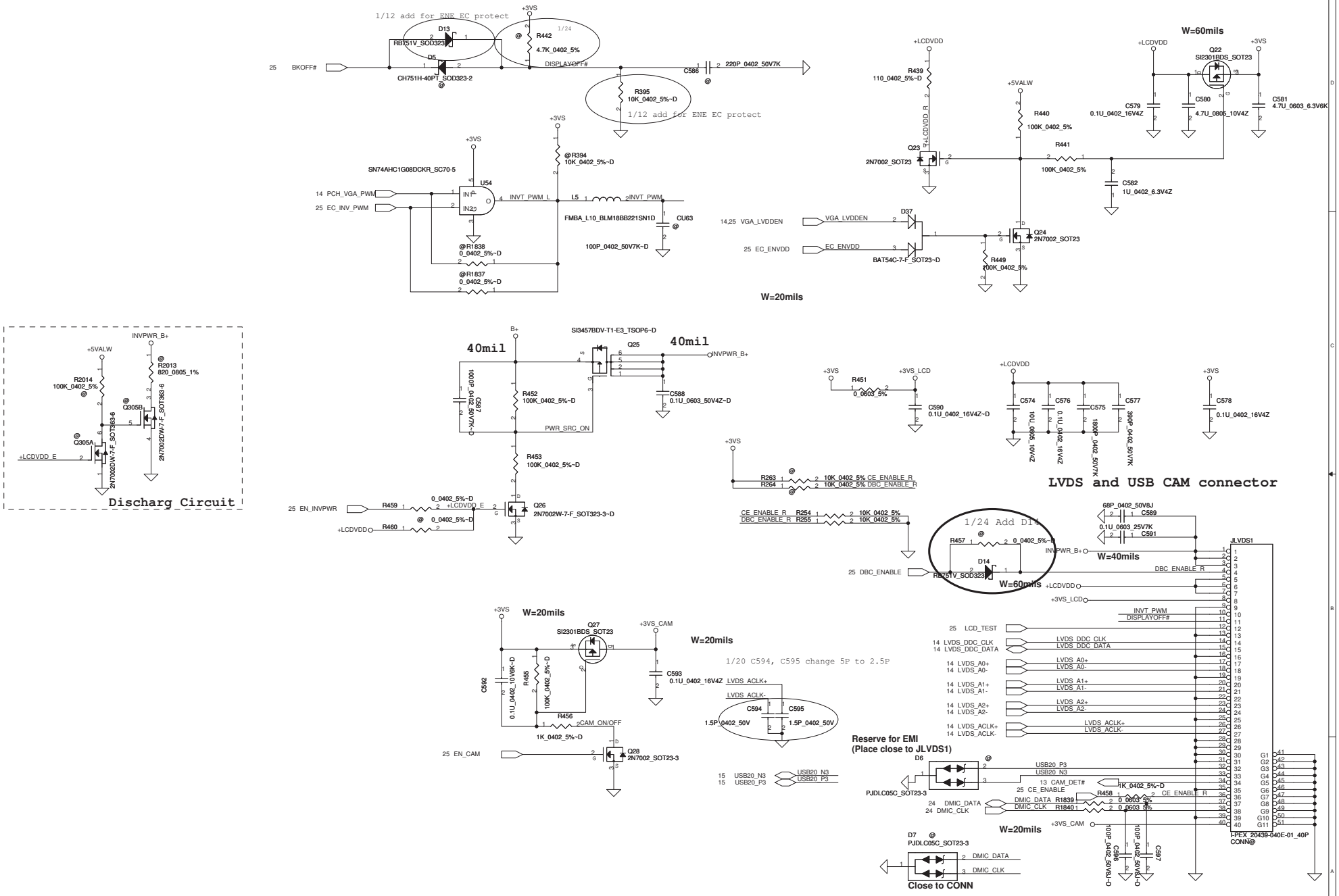

Security Classification	Compal Secret Data		
Issued Date	2010/07/06	Deciphered Date	2011/07/06

THIS SHEET OF ENGINEERING DRAWING IS THE PROPRIETARY PROPERTY OF COMPAL ELECTRONICS, INC. AND CONTAINS CONFIDENTIAL AND TRADE SECRET INFORMATION. THIS SHEET MAY NOT BE TRANSFERED FROM THE CUSTODY OF THE COMPETENT DIVISION OF R&D DEPARTMENT EXCEPT AS AUTHORIZED BY COMPAL ELECTRONICS, INC. NEITHER THIS SHEET NOR THE INFORMATION IT CONTAINS MAY BE USED BY OR DISCLOSED TO ANY THIRD PARTY WITHOUT PRIOR WRITTEN CONSENT OF COMPAL ELECTRONICS, INC.

Compal Electronics, Inc.

Title: **LVDS /camera conn.**

Size: | Document Number: **LA-6961P** | Rev: 0.4

Date: Tuesday, January 25, 2011 | Sheet 20 of 54

http://hobi-elektronika.net

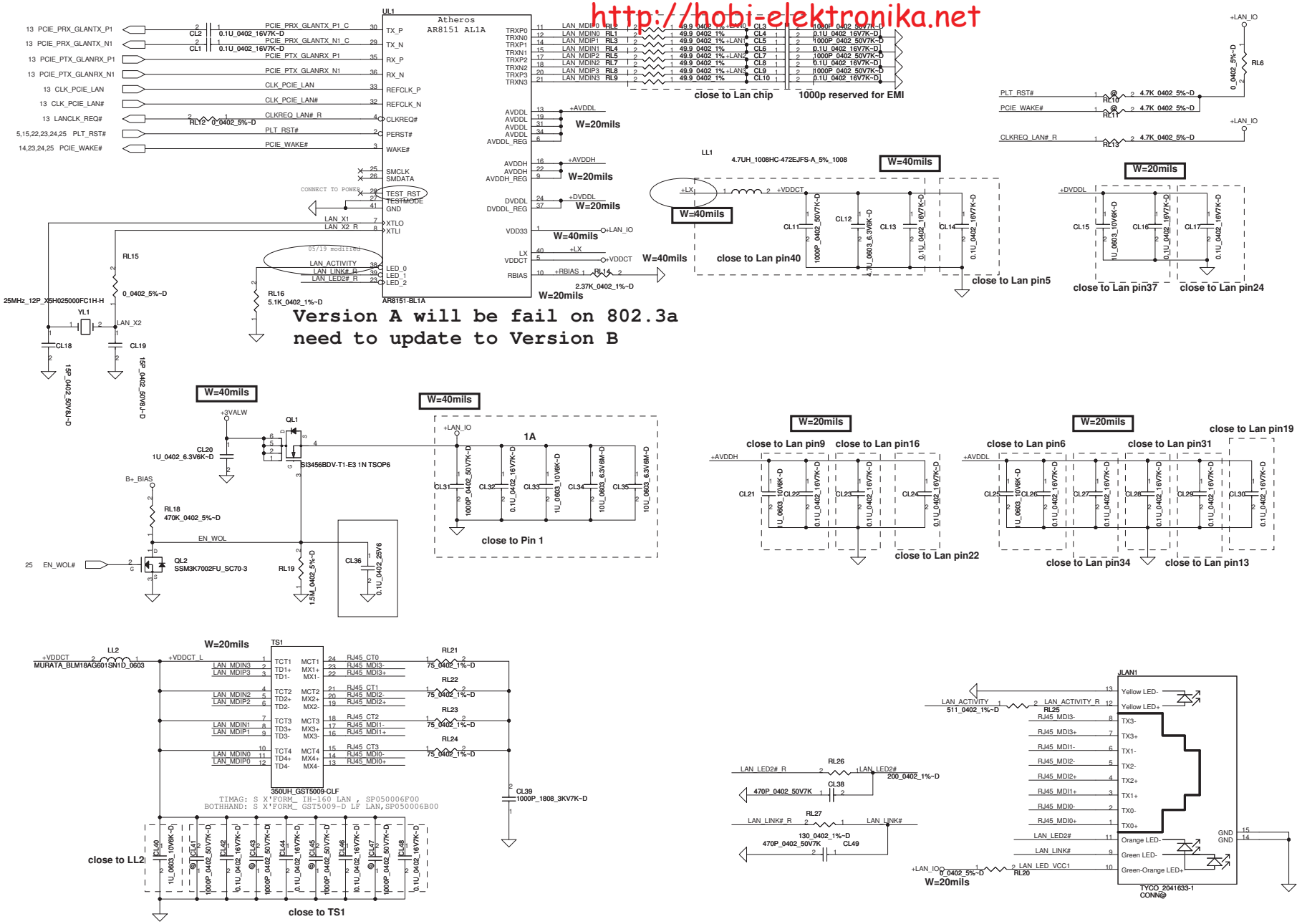

Security Classification	Compal Secret Data		
Issued Date	2010/07/12	Deciphered Date	2011/07/06

THIS SHEET OF ENGINEERING DRAWING IS THE PROPRIETARY PROPERTY OF COMPAL ELECTRONICS, INC. AND CONTAINS CONFIDENTIAL AND TRADE SECRET INFORMATION. THIS SHEET MAY NOT BE TRANSFERED FROM THE CUSTODY OF THE COMPETENT DIVISION OF R&D DEPARTMENT EXCEPT AS AUTHORIZED BY COMPAL ELECTRONICS, INC. NEITHER THIS SHEET NOR THE INFORMATION IT CONTAINS MAY BE USED BY OR DISCLOSED TO ANY THIRD PARTY WITHOUT PRIOR WRITTEN CONSENT OF COMPAL ELECTRONICS, INC.

Compal Electronics, Inc.

Title: **GLAN AR8151 AL1A/ RJ45**

Size | Document Number: **LA-6961P** | Rev: 0.4

Date: Tuesday, January 25, 2011 | Sheet 21 of 54

http://hobi-elektronika.net

3 in 1 Card Reader CONN

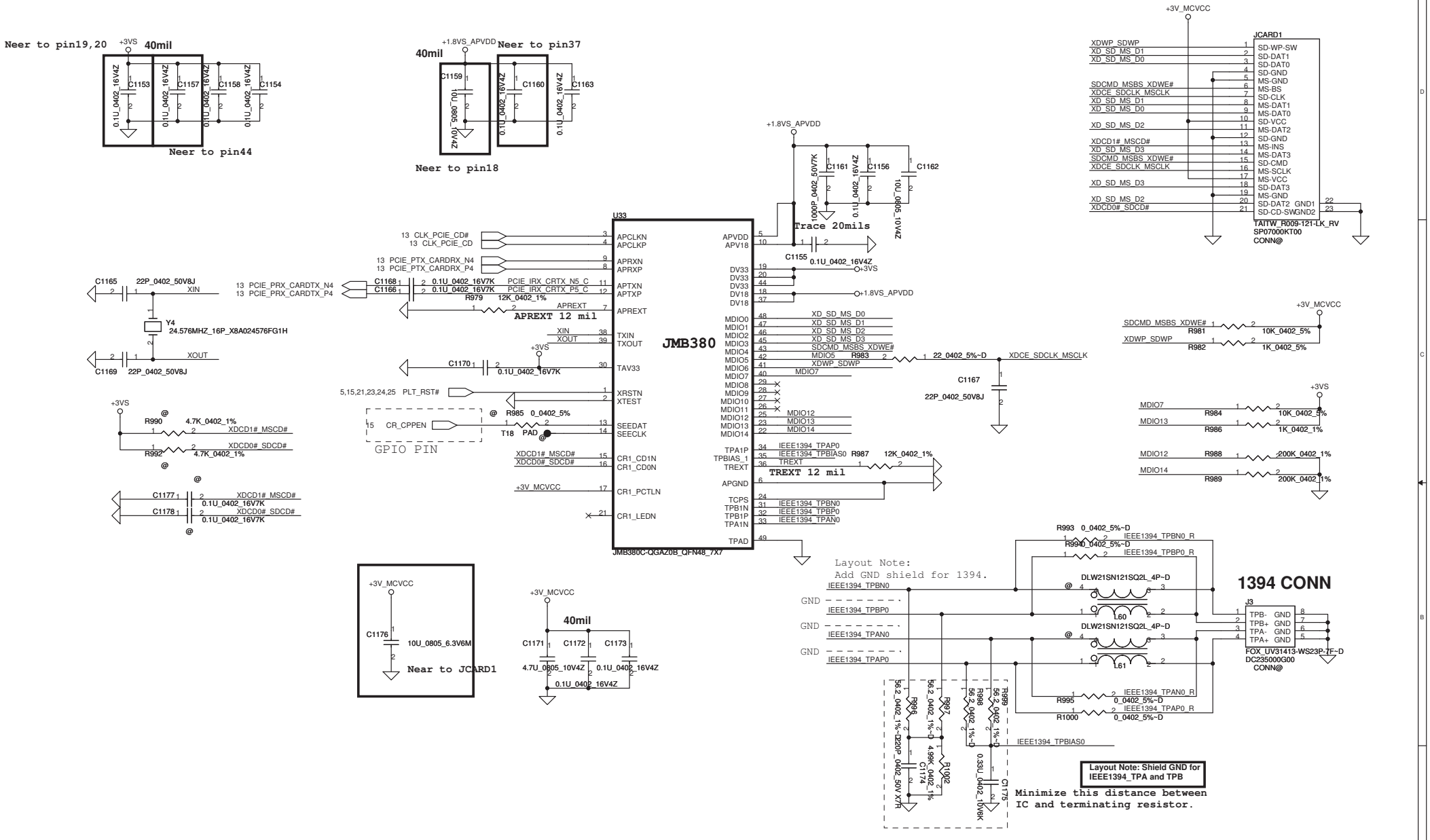

DELL CONFIDENTIAL/PROPRIETARY

Security Classification	Compal Secret Data		
Issued Date	2009/07/25	Deciphered Date	2010/07/25

THIS SHEET OF ENGINEERING DRAWING IS THE PROPRIETARY PROPERTY OF COMPAL ELECTRONICS, INC. AND CONTAINS CONFIDENTIAL AND TRADE SECRET INFORMATION. THIS SHEET MAY NOT BE TRANSFERED FROM THE CUSTODY OF THE COMPETENT DIVISION OF R&D DEPARTMENT EXCEPT AS AUTHORIZED BY COMPAL ELECTRONICS, INC. NEITHER THIS SHEET NOR THE INFORMATION IT CONTAINS MAY BE USED BY OR DISCLOSED TO ANY THIRD PARTY WITHOUT PRIOR WRITTEN CONSENT OF COMPAL ELECTRONICS, INC.

Compal Electronics, Inc.

Title: CARD READER/1394

Size: Custom | Document Number: LA-6961P | Rev: 0.4

Date: Monday, January 24, 2011 | Sheet 22 of 54

http://hobi-elektronika.net

WWAN PCIE MiniCard

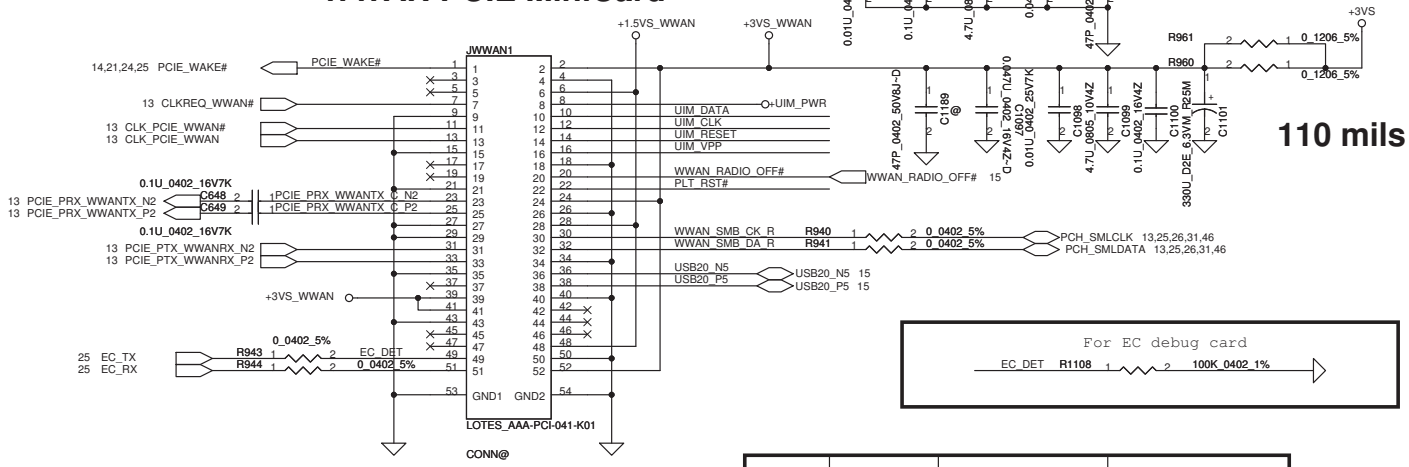

For EC debug card

EC_DET R1108 100K_0402_1%

SIM Card

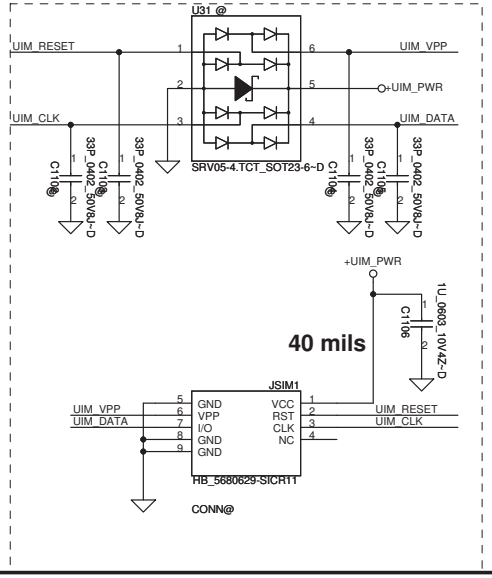

PWR Rail	Voltage Tolerance	Primary Power		Aux Power
		Peak	Normal	Normal
+3.3V	+-9%	1000	750	
+3.3Vaux	+-9%	330	250	250 (Wake enable) 5 (Not wake enable)
+1.5V	+-5%	500	375	NA

WLAN/WIMAX PCIE Mini Card

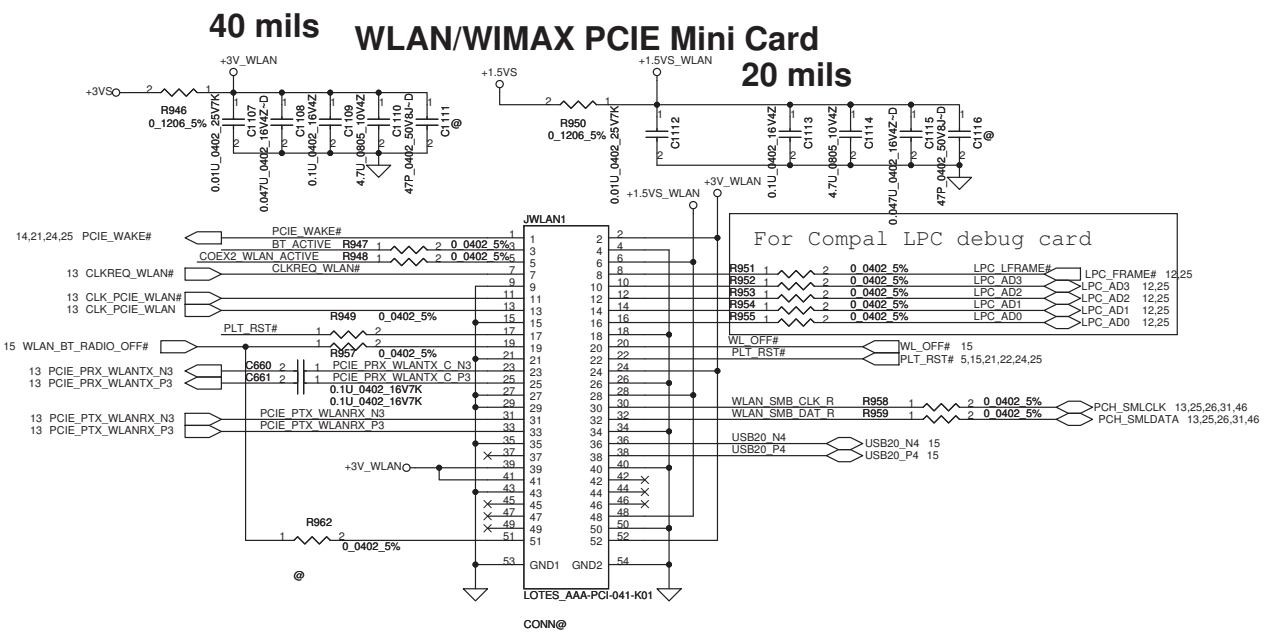

For Compal LPC debug card

LPC_FRAME#
LPC_AD3
LPC_AD2
LPC_AD1
LPC_AD0

Bluetooth

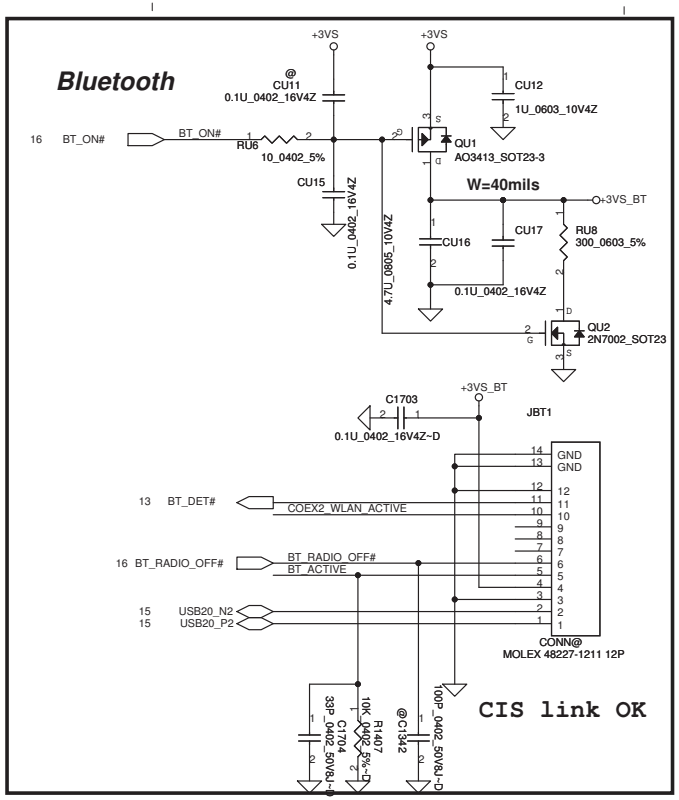

DELL CONFIDENTIAL/PROPRIETARY

Security Classification	Compal Secret Data		
Issued Date	2009/07/25	Deciphered Date	2011/07/06

THIS SHEET OF ENGINEERING DRAWING IS THE PROPRIETARY PROPERTY OF COMPAL ELECTRONICS, INC. AND CONTAINS CONFIDENTIAL AND TRADE SECRET INFORMATION. THIS SHEET MAY NOT BE TRANSFERED FROM THE CUSTODY OF THE COMPETENT DIVISION OF R&D DEPARTMENT EXCEPT AS AUTHORIZED BY COMPAL ELECTRONICS, INC. NEITHER THIS SHEET NOR THE INFORMATION IT CONTAINS MAY BE USED BY OR DISCLOSED TO ANY THIRD PARTY WITHOUT PRIOR WRITTEN CONSENT OF COMPAL ELECTRONICS, INC.

Compal Electronics, Inc.

Title: WLAN/WWAN/SIM/BT

Size: Custom | Document Number: LA-6961P | Rev: 0.4

Date: Monday, January 24, 2011 | Sheet 23 of 54

http://hobi-elektronika.net

IO Board CONN

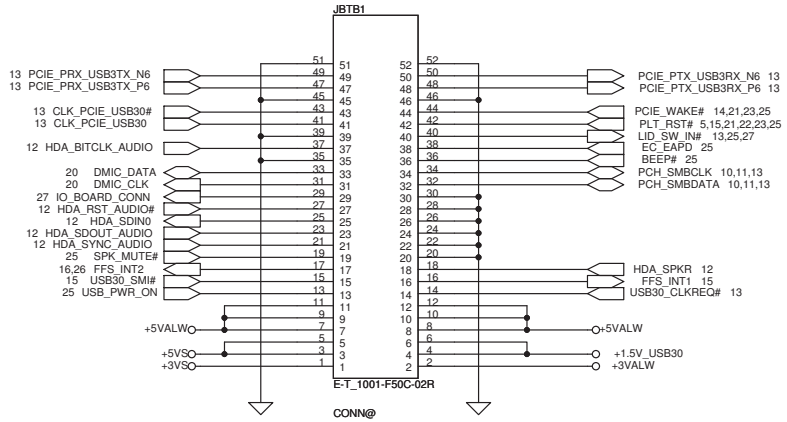

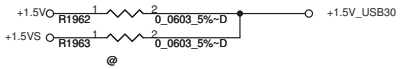

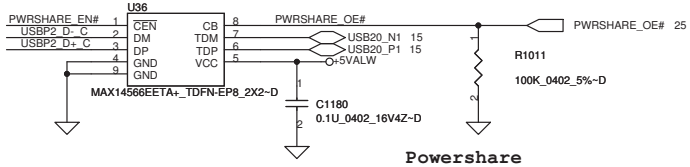

Powershare

OE#	Function
L	Dect charger
H	D=1D

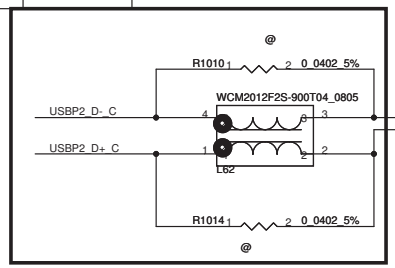

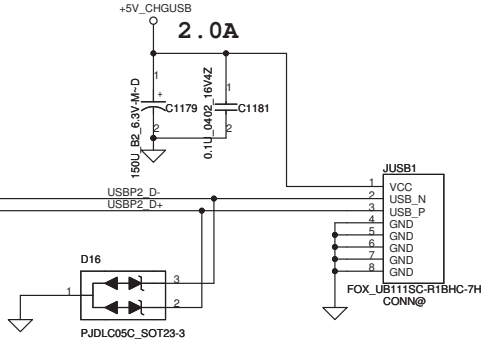

2.0A

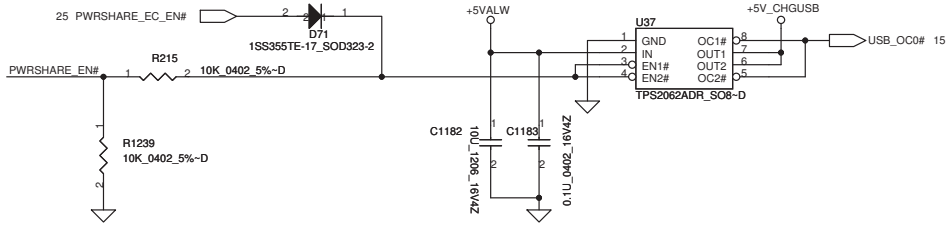

Security Classification	Compal Secret Data		
Issued Date	2009/07/25	Deciphered Date	2011/07/06

THIS SHEET OF ENGINEERING DRAWING IS THE PROPRIETARY PROPERTY OF COMPAL ELECTRONICS, INC. AND CONTAINS CONFIDENTIAL AND TRADE SECRET INFORMATION. THIS SHEET MAY NOT BE TRANSFERED FROM THE CUSTODY OF THE COMPETENT DIVISION OF R&D DEPARTMENT EXCEPT AS AUTHORIZED BY COMPAL ELECTRONICS, INC. NEITHER THIS SHEET NOR THE INFORMATION IT CONTAINS MAY BE USED BY OR DISCLOSED TO ANY THIRD PARTY WITHOUT PRIOR WRITTEN CONSENT OF COMPAL ELECTRONICS, INC.

Compal Electronics, Inc.

Title: **USB/LID SW/IO CONN**

Size: Custom | Document Number: LA-6961P | Rev: 0.4

Date: Monday, January 24, 2011 | Sheet 24 of 54

http://hobi-elektronika.net

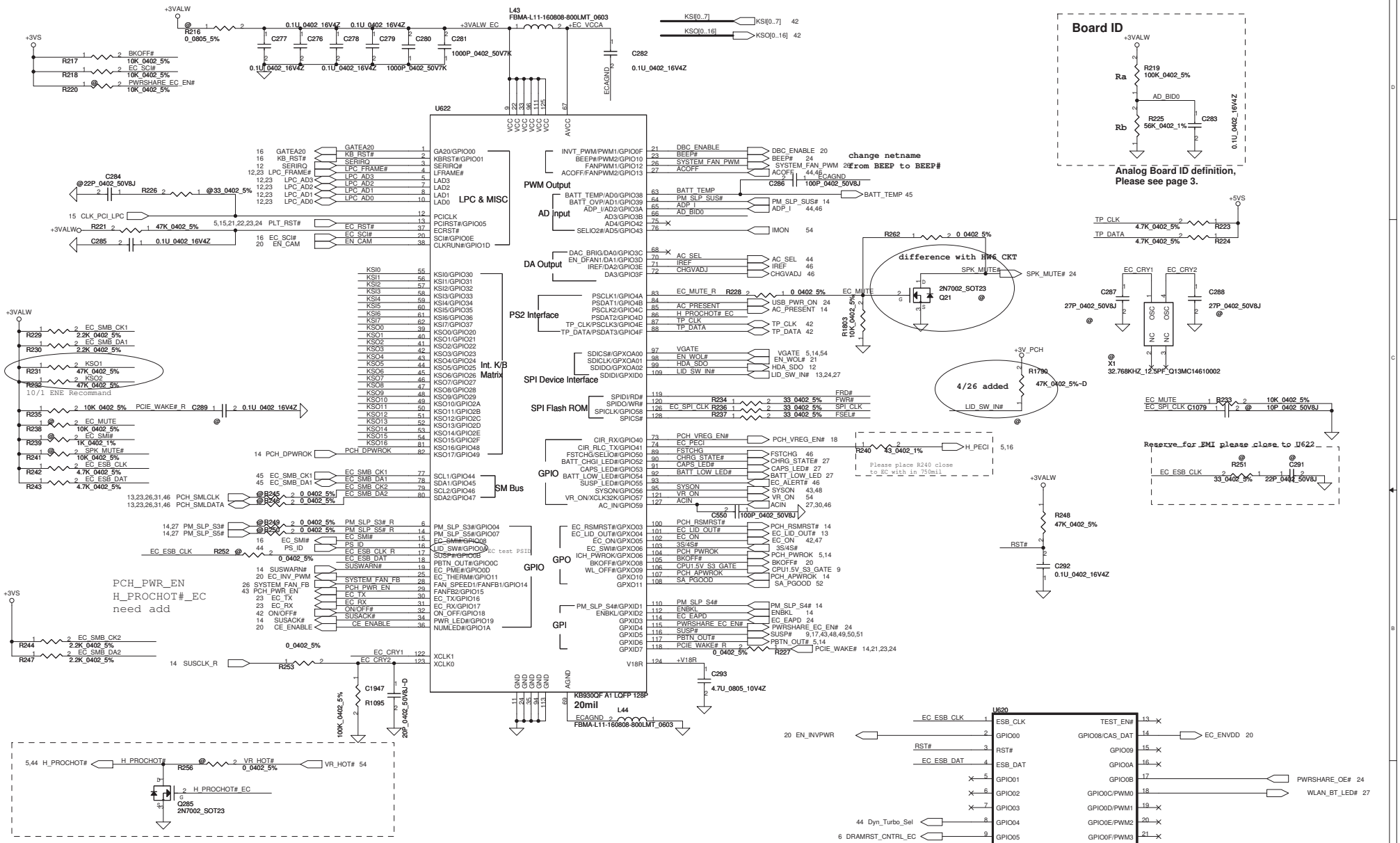

Security Classification	Compal Secret Data			Compal Electronics, Inc.
Issued Date	2010/07/12	Deciphered Date	2011/07/06	Title: EC ENE-KB930/ ENE3810
				Size: Document Number: LA-6961P Rev: 0.4
				Date: Tuesday, January 25, 2011 Sheet 25 of 54

THIS SHEET OF ENGINEERING DRAWING IS THE PROPRIETARY PROPERTY OF COMPAL ELECTRONICS, INC. AND CONTAINS CONFIDENTIAL AND TRADE SECRET INFORMATION. THIS SHEET MAY NOT BE TRANSFERED FROM THE CUSTODY OF THE COMPETENT DIVISION OF R&D DEPARTMENT EXCEPT AS AUTHORIZED BY COMPAL ELECTRONICS, INC. NEITHER THIS SHEET NOR THE INFORMATION IT CONTAINS MAY BE USED BY OR DISCLOSED TO ANY THIRD PARTY WITHOUT PRIOR WRITTEN CONSENT OF COMPAL ELECTRONICS, INC.

http://hobi-elektronika.net

Skin Thermal Sensor

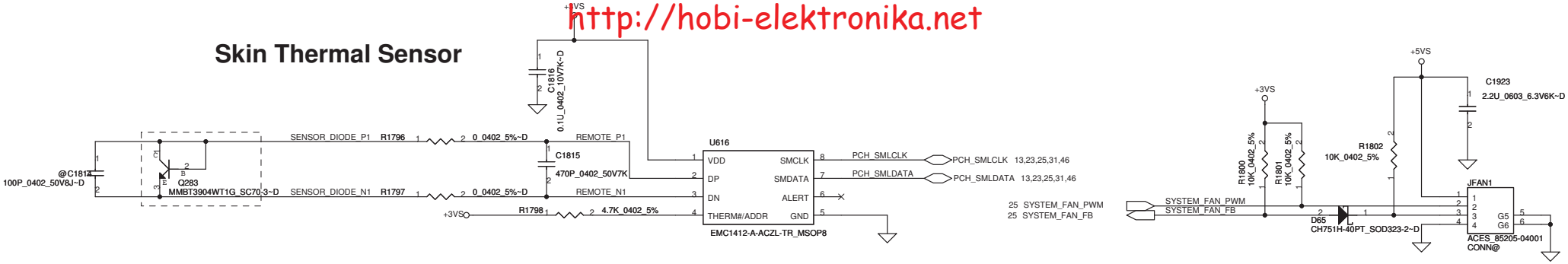

HDD Connector

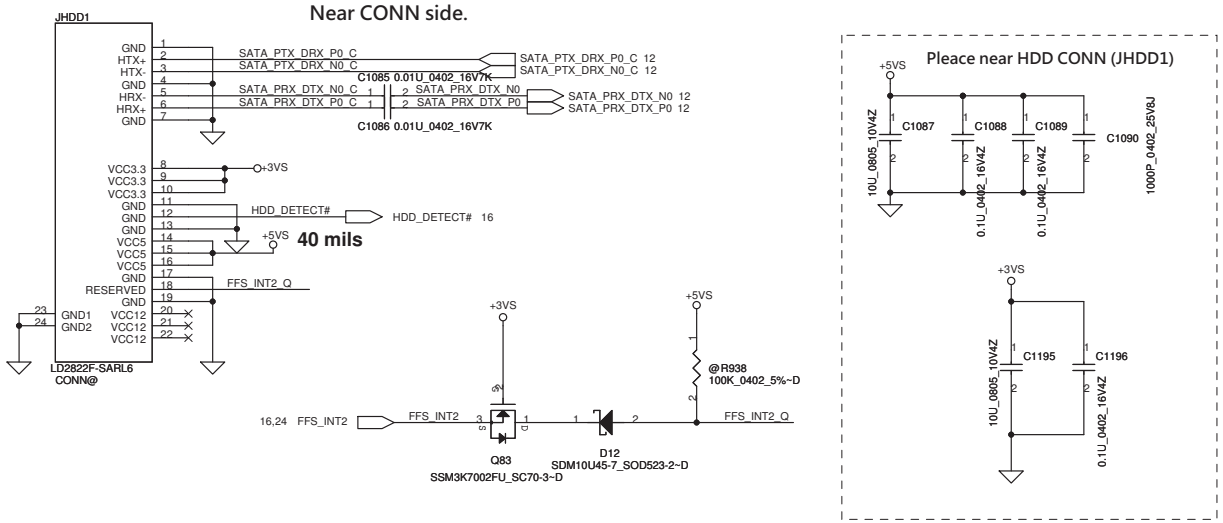

PROPRIETARY NOTE: THIS SHEET OF ENGINEERING DRAWING AND SPECIFICATIONS CONTAINS CONFIDENTIAL TRADE SECRET AND OTHER PROPRIETARY INFORMATION OF DELL INC. ("DELL") THIS DOCUMENT MAY NOT BE TRANSFERRED OR COPIED WITHOUT THE EXPRESS WRITTEN AUTHORIZATION OF DELL. IN ADDITION, NEITHER THIS SHEET NOR THE INFORMATION IT CONTAINS WAY BE USED BY OR DISCLOSED TO ANY THIRD PARTY WITHOUT DELL'S EXPRESS WRITTEN CONSENT.

DELL CONFIDENTIAL/PROPRIETARY

Compal Electronics, Inc.

Title: FAN & Thermal Sensor

Size | Document Number: LA-6961P | Rev: 0.4

Date: Tuesday, January 25, 2011 | Sheet 26 of 54

http://hobi-elektronika.net

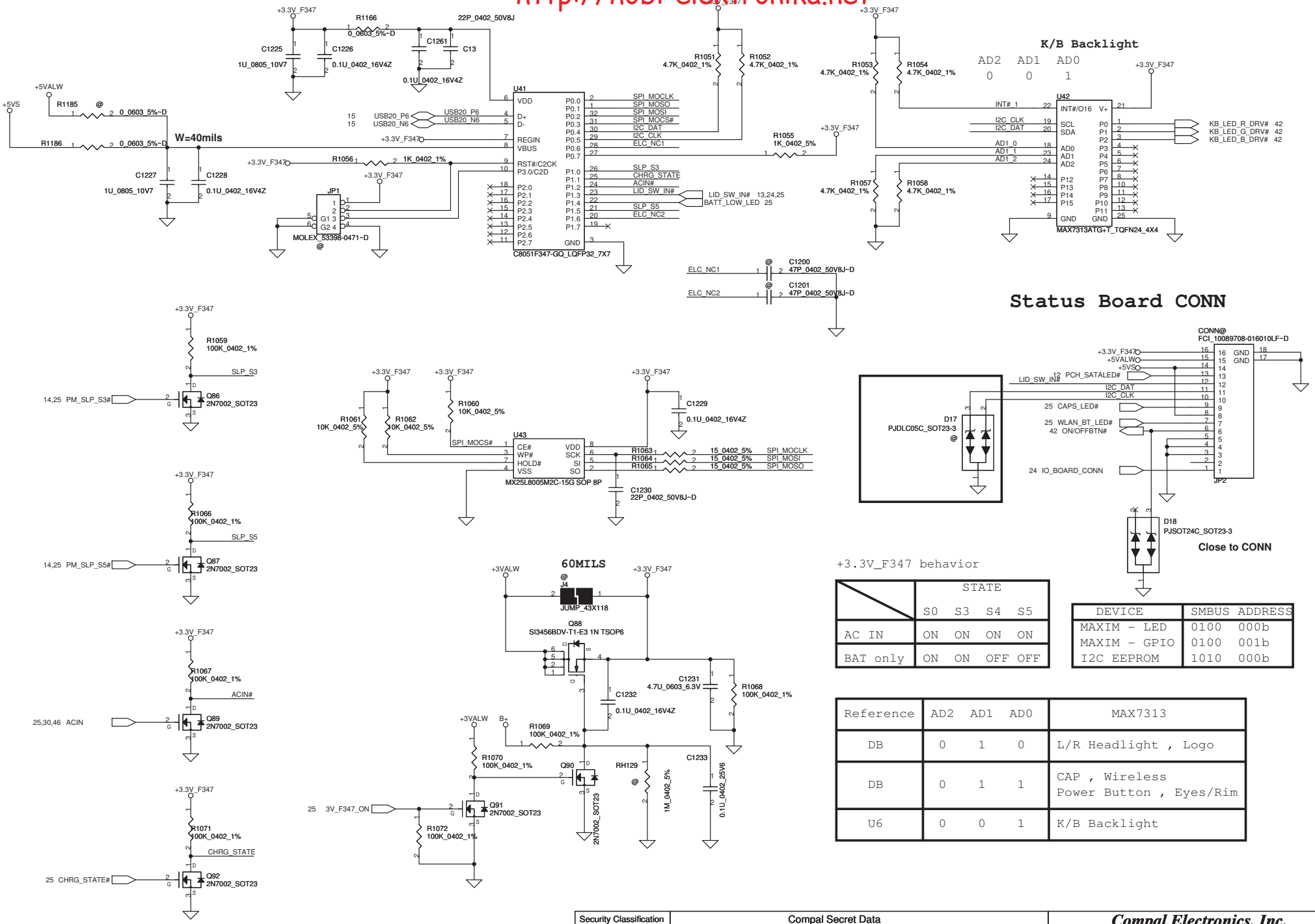

+3.3V_F347 behavior

	STATE			
	S0	S3	S4	S5
AC IN	ON	ON	ON	ON
BAT only	ON	ON	OFF	OFF

DEVICE	SMBUS ADDRESS
MAXIM - LED	0100 000b
MAXIM - GPIO	0100 001b
I2C EEPROM	1010 000b

Reference	AD2	AD1	AD0	MAX7313
DB	0	1	0	L/R Headlight , Logo
DB	0	1	1	CAP , Wireless Power Button , Eyes/Rim
U6	0	0	1	K/B Backlight

Security Classification	Compal Secret Data		
Issued Date	2009/07/25	Deciphered Date	2011/07/06

THIS SHEET OF ENGINEERING DRAWING IS THE PROPRIETARY PROPERTY OF COMPAL ELECTRONICS, INC. AND CONTAINS CONFIDENTIAL AND TRADE SECRET INFORMATION. THIS SHEET MAY NOT BE TRANSFERED FROM THE CUSTODY OF THE COMPETENT DIVISION OF R&D DEPARTMENT EXCEPT AS AUTHORIZED BY COMPAL ELECTRONICS, INC. NEITHER THIS SHEET NOR THE INFORMATION IT CONTAINS MAY BE USED BY OR DISCLOSED TO ANY THIRD PARTY WITHOUT PRIOR WRITTEN CONSENT OF COMPAL ELECTRONICS, INC.

Compal Electronics, Inc.

Title: ELC/STATUS CONN

Size: Custom | Document Number: LA-6961P | Rev: 0.4

Date: Tuesday, January 25, 2011 | Sheet 27 of 54

http://hobi-elektronika.net

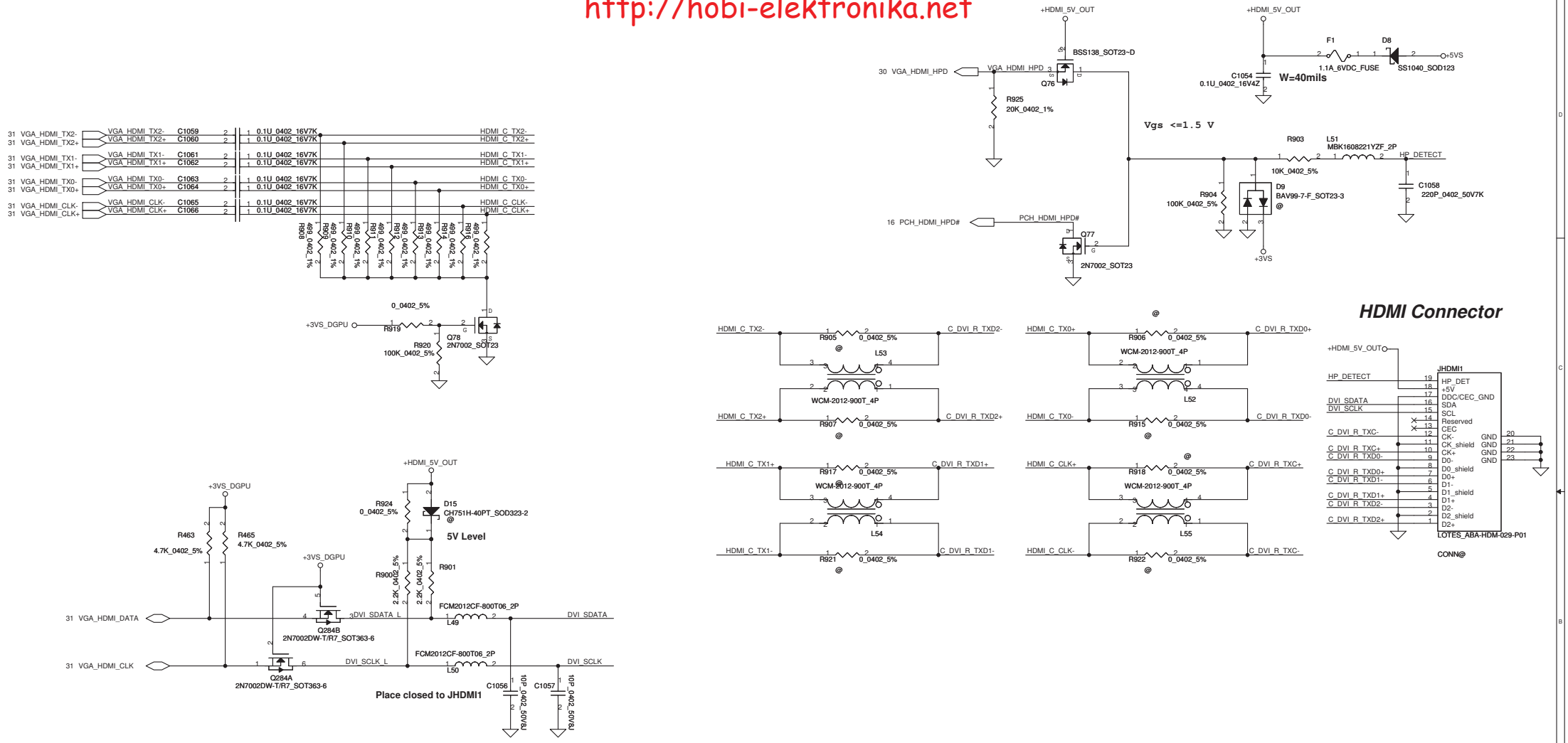

DELL CONFIDENTIAL/PROPRIETARY

Security Classification	Compal Secret Data		
Issued Date	2009/07/25	Deciphered Date	2011/07/06

THIS SHEET OF ENGINEERING DRAWING IS THE PROPRIETARY PROPERTY OF COMPAL ELECTRONICS, INC. AND CONTAINS CONFIDENTIAL AND TRADE SECRET INFORMATION. THIS SHEET MAY NOT BE TRANSFERED FROM THE CUSTODY OF THE COMPETENT DIVISION OF R&D DEPARTMENT EXCEPT AS AUTHORIZED BY COMPAL ELECTRONICS, INC. NEITHER THIS SHEET NOR THE INFORMATION IT CONTAINS MAY BE USED BY OR DISCLOSED TO ANY THIRD PARTY WITHOUT PRIOR WRITTEN CONSENT OF COMPAL ELECTRONICS, INC.

Compal Electronics, Inc.

Title: HDMI

Size	Document Number	Rev
Custom	LA-6961P	0.4

Date: Monday, January 24, 2011 | Sheet 28 of 54

http://hobi-elektronika.net

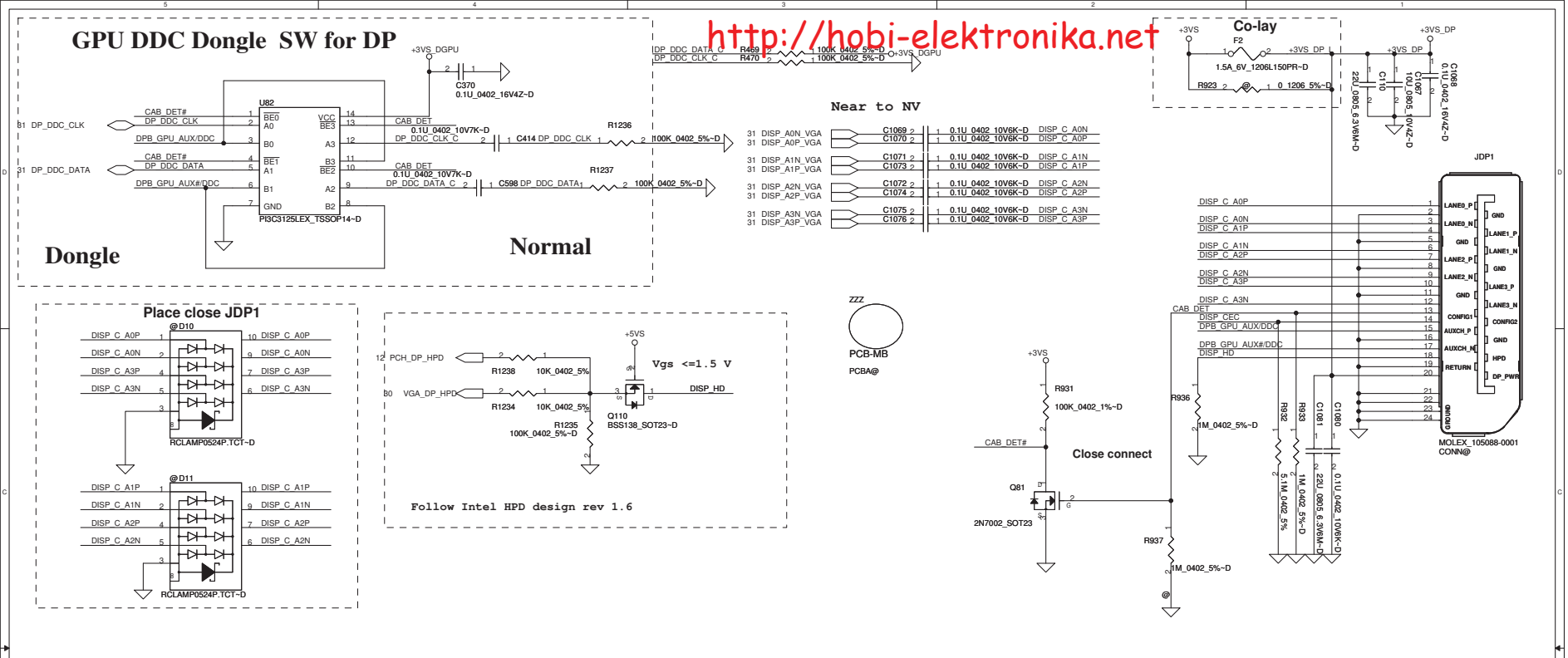

DELL CONFIDENTIAL/PROPRIETARY

Security Classification	Compal Secret Data			Compal Electronics, Inc.
Issued Date	2009/07/25	Deciphered Date	2011/07/06	Title: DP/FAN/HDD
				Size: Custom; Document Number: LA-6961P; Rev: 0.4
				Date: Monday, January 24, 2011; Sheet 29 of 54

THIS SHEET OF ENGINEERING DRAWING IS THE PROPRIETARY PROPERTY OF COMPAL ELECTRONICS, INC. AND CONTAINS CONFIDENTIAL AND TRADE SECRET INFORMATION. THIS SHEET MAY NOT BE TRANSFERED FROM THE CUSTODY OF THE COMPETENT DIVISION OF R&D DEPARTMENT EXCEPT AS AUTHORIZED BY COMPAL ELECTRONICS, INC. NEITHER THIS SHEET NOR THE INFORMATION IT CONTAINS MAY BE USED BY OR DISCLOSED TO ANY THIRD PARTY WITHOUT PRIOR WRITTEN CONSENT OF COMPAL ELECTRONICS, INC.

http://hobi-elektronika.net

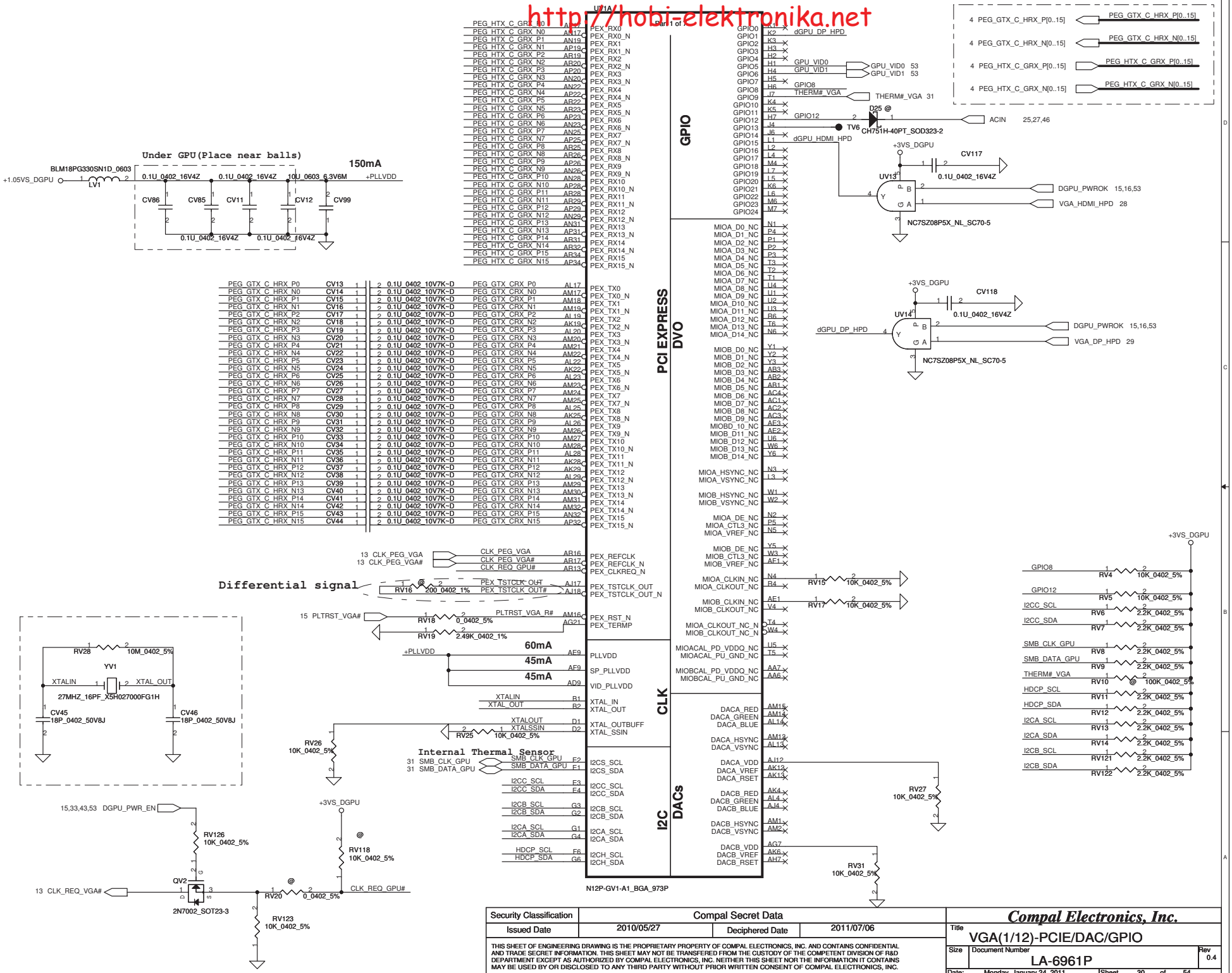

Security Classification	Compal Secret Data		
Issued Date	2010/05/27	Deciphered Date	2011/07/06

THIS SHEET OF ENGINEERING DRAWING IS THE PROPRIETARY PROPERTY OF COMPAL ELECTRONICS, INC. AND CONTAINS CONFIDENTIAL AND TRADE SECRET INFORMATION. THIS SHEET MAY NOT BE TRANSFERED FROM THE CUSTODY OF THE COMPETENT DIVISION OF R&D DEPARTMENT EXCEPT AS AUTHORIZED BY COMPAL ELECTRONICS, INC. NEITHER THIS SHEET NOR THE INFORMATION IT CONTAINS MAY BE USED BY OR DISCLOSED TO ANY THIRD PARTY WITHOUT PRIOR WRITTEN CONSENT OF COMPAL ELECTRONICS, INC.

Compal Electronics, Inc.

Title: VGA(1/12)-PCIE/DAC/GPIO

Size: | Document Number: LA-6961P | Rev: 0.4

Date: Monday, January 24, 2011 | Sheet 30 of 54

http://hobi-elektronika.net

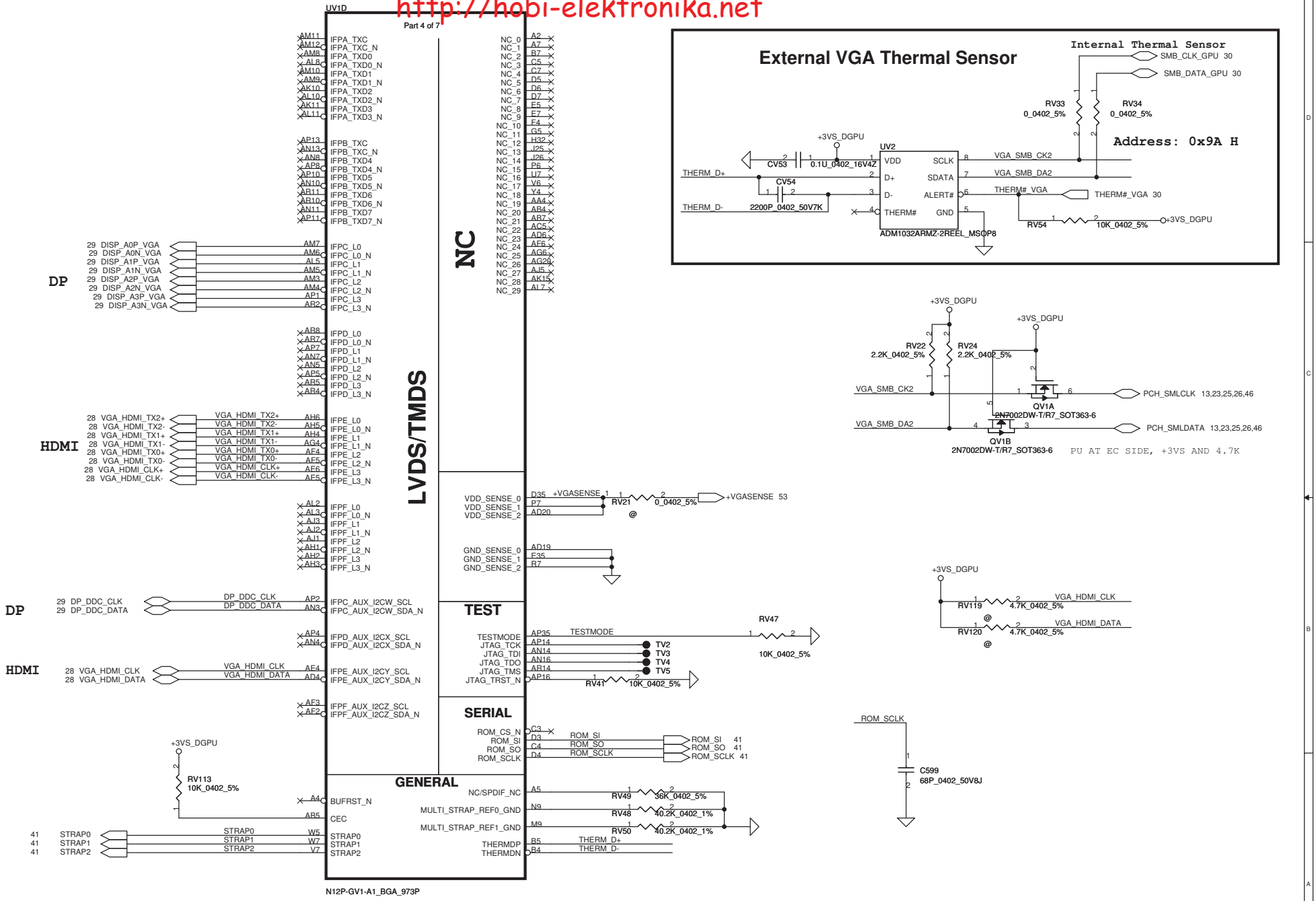

Security Classification	Compal Secret Data	X76	Compal Electronics, Inc.
Issued Date	2010/05/27	Deciphered Date 2011/07/06	Title: VGA(2/12)-LVDS/HDMI/DP/THM
			Size / Document Number: LA-6961P — Rev 0.4
			Date: Tuesday, January 25, 2011 — Sheet 31 of 54

THIS SHEET OF ENGINEERING DRAWING IS THE PROPRIETARY PROPERTY OF COMPAL ELECTRONICS, INC. AND CONTAINS CONFIDENTIAL AND TRADE SECRET INFORMATION. THIS SHEET MAY NOT BE TRANSFERED FROM THE CUSTODY OF THE COMPETENT DIVISION OF R&D DEPARTMENT EXCEPT AS AUTHORIZED BY COMPAL ELECTRONICS, INC. NEITHER THIS SHEET NOR THE INFORMATION IT CONTAINS MAY BE USED BY OR DISCLOSED TO ANY THIRD PARTY WITHOUT PRIOR WRITTEN CONSENT OF COMPAL ELECTRONICS, INC.

http://hobi-elektronika.net

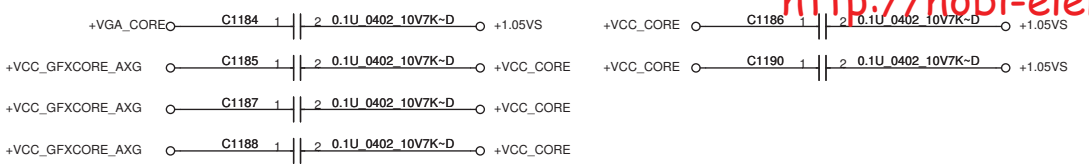

30.5A

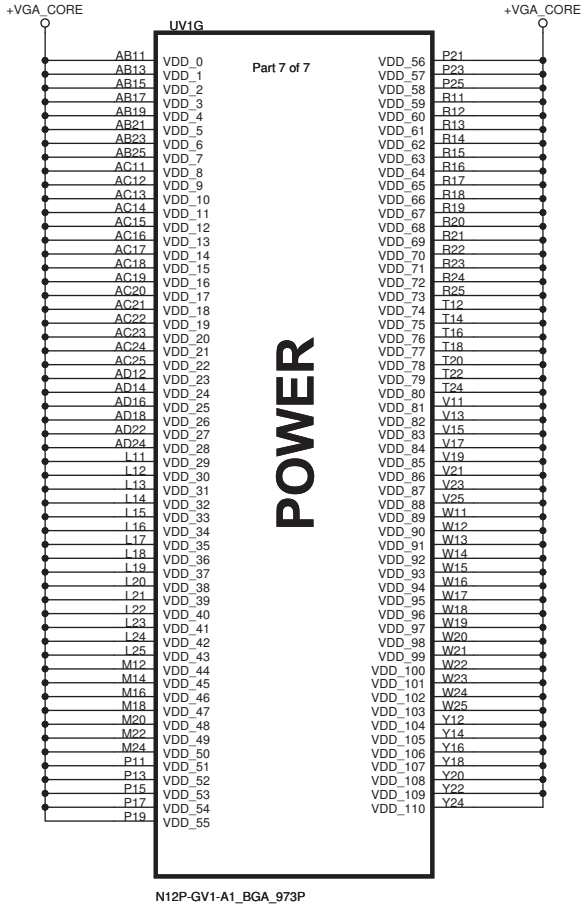

Near GPU

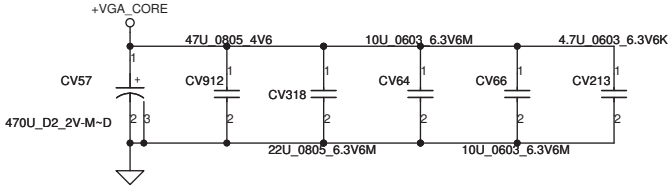

Under GPU

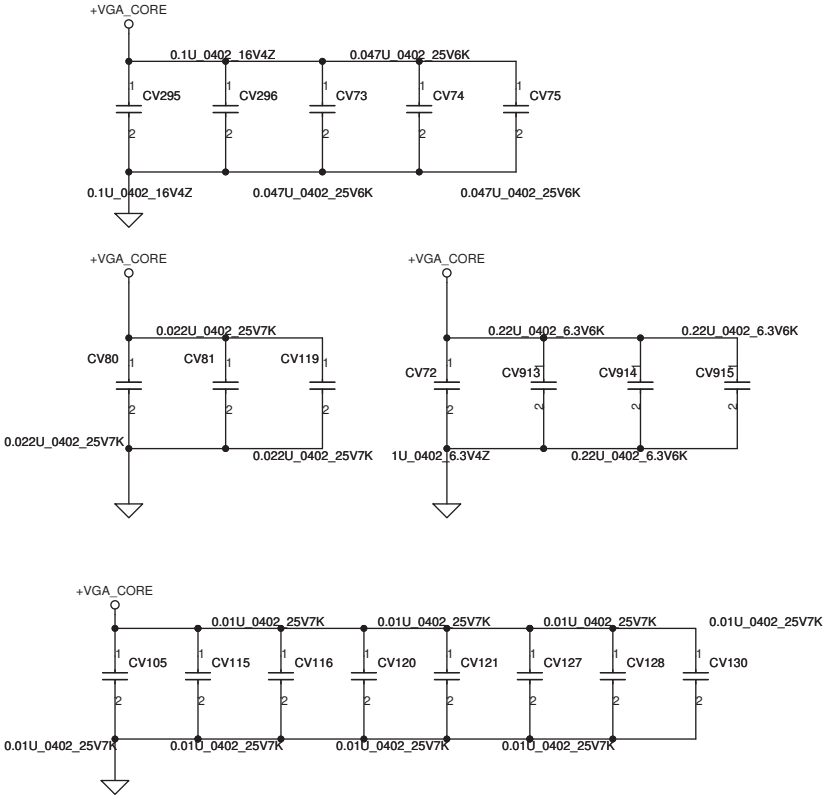

Security Classification	Compal Secret Data		
Issued Date	2010/05/27	Deciphered Date	2011/07/06

THIS SHEET OF ENGINEERING DRAWING IS THE PROPRIETARY PROPERTY OF COMPAL ELECTRONICS, INC. AND CONTAINS CONFIDENTIAL AND TRADE SECRET INFORMATION. THIS SHEET MAY NOT BE TRANSFERED FROM THE CUSTODY OF THE COMPETENT DIVISION OF R&D DEPARTMENT EXCEPT AS AUTHORIZED BY COMPAL ELECTRONICS, INC. NEITHER THIS SHEET NOR THE INFORMATION IT CONTAINS MAY BE USED BY OR DISCLOSED TO ANY THIRD PARTY WITHOUT PRIOR WRITTEN CONSENT OF COMPAL ELECTRONICS, INC.

Compal Electronics, Inc.

Title: VGA(3/12)-VGA CORE

Size | Document Number: LA-6961P | Rev: 0.4

Date: Monday, January 24, 2011 | Sheet 32 of 54

http://hobi-elektronika.net

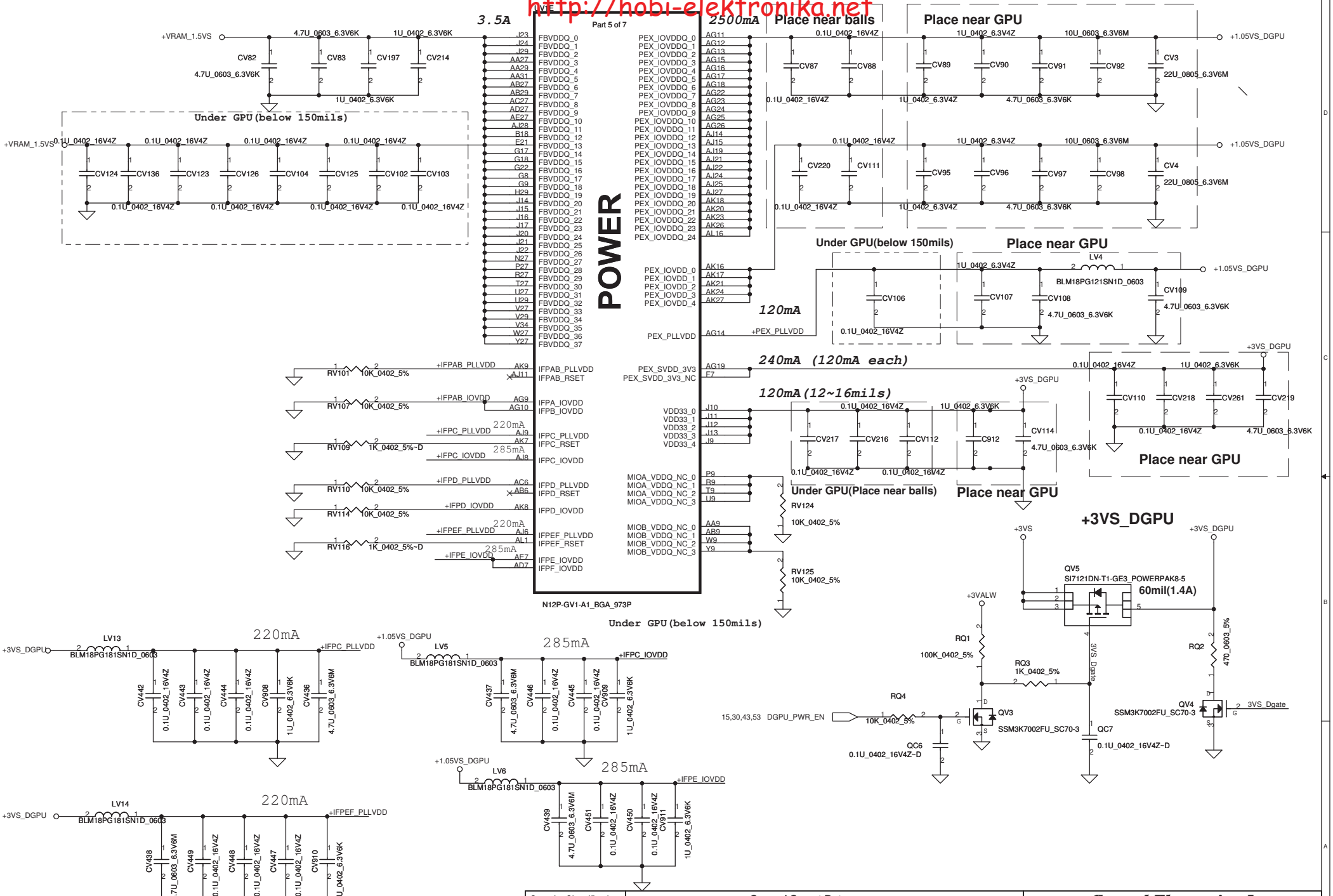

Security Classification	Compal Secret Data		
Issued Date	2010/05/27	Deciphered Date	2011/07/06

THIS SHEET OF ENGINEERING DRAWING IS THE PROPRIETARY PROPERTY OF COMPAL ELECTRONICS, INC. AND CONTAINS CONFIDENTIAL AND TRADE SECRET INFORMATION. THIS SHEET MAY NOT BE TRANSFERED FROM THE CUSTODY OF THE COMPETENT DIVISION OF R&D DEPARTMENT EXCEPT AS AUTHORIZED BY COMPAL ELECTRONICS, INC. NEITHER THIS SHEET NOR THE INFORMATION IT CONTAINS MAY BE USED BY OR DISCLOSED TO ANY THIRD PARTY WITHOUT PRIOR WRITTEN CONSENT OF COMPAL ELECTRONICS, INC.

Compal Electronics, Inc.

Title: VGA(4/12)-POWER

Size: | Document Number: LA-6961P | Rev: 0.4

Date: Monday, January 24, 2011 | Sheet 33 of 54

http://hobi-elektronika.net

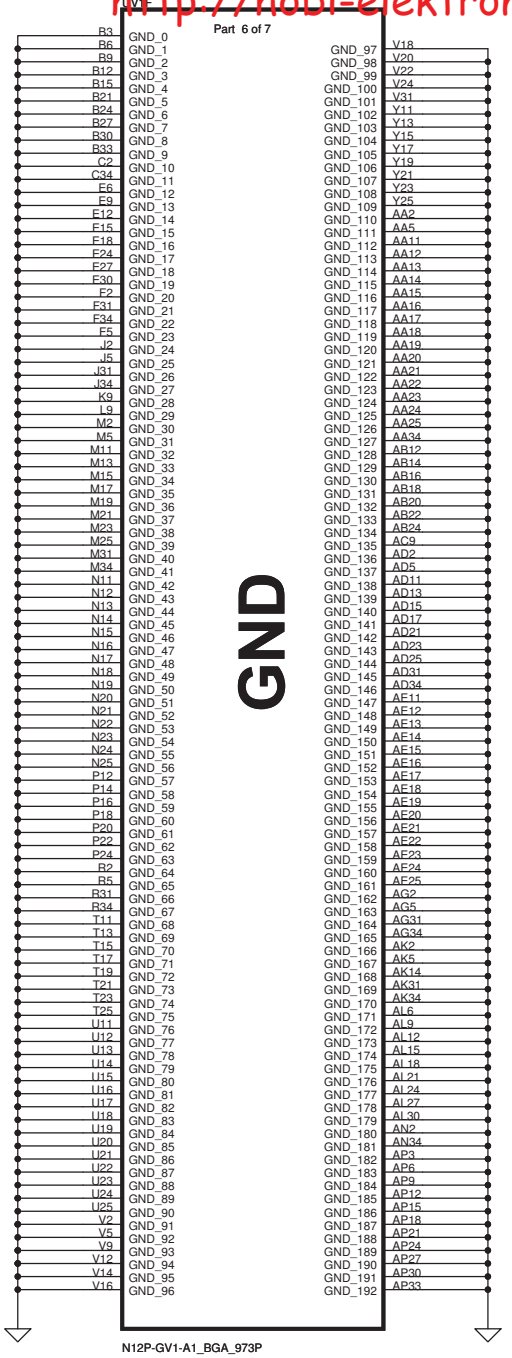

Security Classification	Compal Secret Data		
Issued Date	2010/05/27	Deciphered Date	2011/07/06

THIS SHEET OF ENGINEERING DRAWING IS THE PROPRIETARY PROPERTY OF COMPAL ELECTRONICS, INC. AND CONTAINS CONFIDENTIAL AND TRADE SECRET INFORMATION. THIS SHEET MAY NOT BE TRANSFERED FROM THE CUSTODY OF THE COMPETENT DIVISION OF R&D DEPARTMENT EXCEPT AS AUTHORIZED BY COMPAL ELECTRONICS, INC. NEITHER THIS SHEET NOR THE INFORMATION IT CONTAINS MAY BE USED BY OR DISCLOSED TO ANY THIRD PARTY WITHOUT PRIOR WRITTEN CONSENT OF COMPAL ELECTRONICS, INC.

Compal Electronics, Inc.

Title: VGA(5/12)-GND

Size | Document Number: LA-6961P | Rev: 0.4

Date: Monday, January 24, 2011 | Sheet 34 of 54

http://hobi-elektronika.net

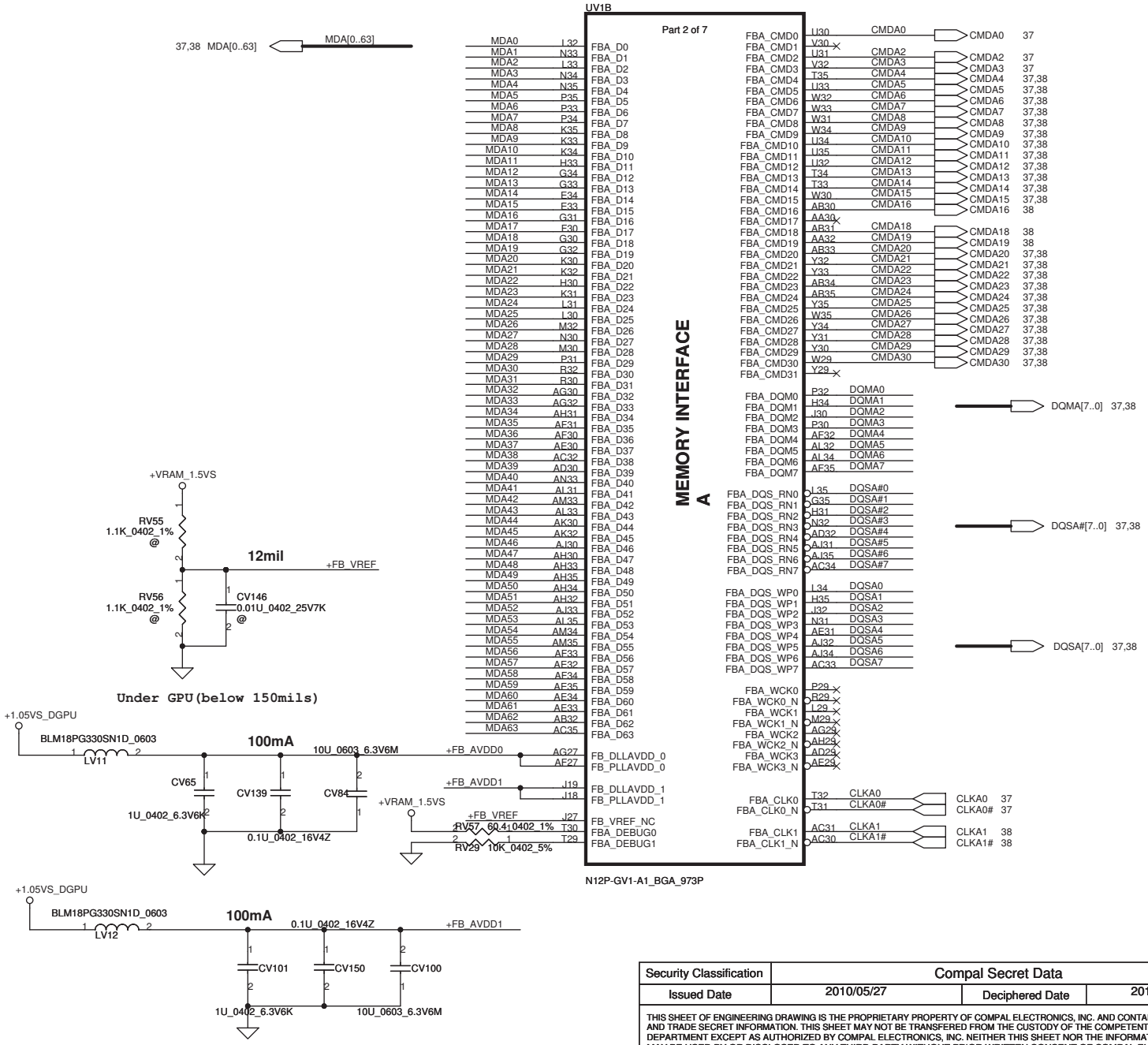

Mode E - Mirror Mode Mapping

	DATA Bus	
Address	0..31	32..63
CMD3	CKE_L	
CMD8	A8	A8
CMD2	CS0#_L	
CMD21	A7	A6
CMD24	A2	A1
CMD23	A11	A9
CMD26	A5	A4
CMD7	A0	A12
CMD15	CAS#	CAS#
CMD13	BA1	A3
CMD4	A9	A11
CMD18		CS0#_H
CMD29	BA0	BA0
CMD27	BA2	A15
CMD6	A3	BA1
CMD17		CS1#_H
CMD19		ODT_H
CMD22	A4	A5
CMD12	A13	A14
CMD28	WE#	A10
CMD10	A1	A2
CMD25	A10	WE#
CMD9	A12	A0
CMD1	CS1#_L	
CMD11	RAS#	RAS#
CMD0	ODT_L	
CMD5	A6	A7
CMD16		CKE_H
CMD20	RST	RST
CMD14	A14	A13
CMD30	A15	BA2

Security Classification	Compal Secret Data		
Issued Date	2010/05/27	Deciphered Date	2011/07/06

THIS SHEET OF ENGINEERING DRAWING IS THE PROPRIETARY PROPERTY OF COMPAL ELECTRONICS, INC. AND CONTAINS CONFIDENTIAL AND TRADE SECRET INFORMATION. THIS SHEET MAY NOT BE TRANSFERED FROM THE CUSTODY OF THE COMPETENT DIVISION OF R&D DEPARTMENT EXCEPT AS AUTHORIZED BY COMPAL ELECTRONICS, INC. NEITHER THIS SHEET NOR THE INFORMATION IT CONTAINS MAY BE USED BY OR DISCLOSED TO ANY THIRD PARTY WITHOUT PRIOR WRITTEN CONSENT OF COMPAL ELECTRONICS, INC.

Compal Electronics, Inc.

Title: VGA(6/12)-MEM Interface A

Size | Document Number: LA-6961P | Rev: 0.4

Date: Monday, January 24, 2011 | Sheet 35 of 54

http://hobi-elektronika.net

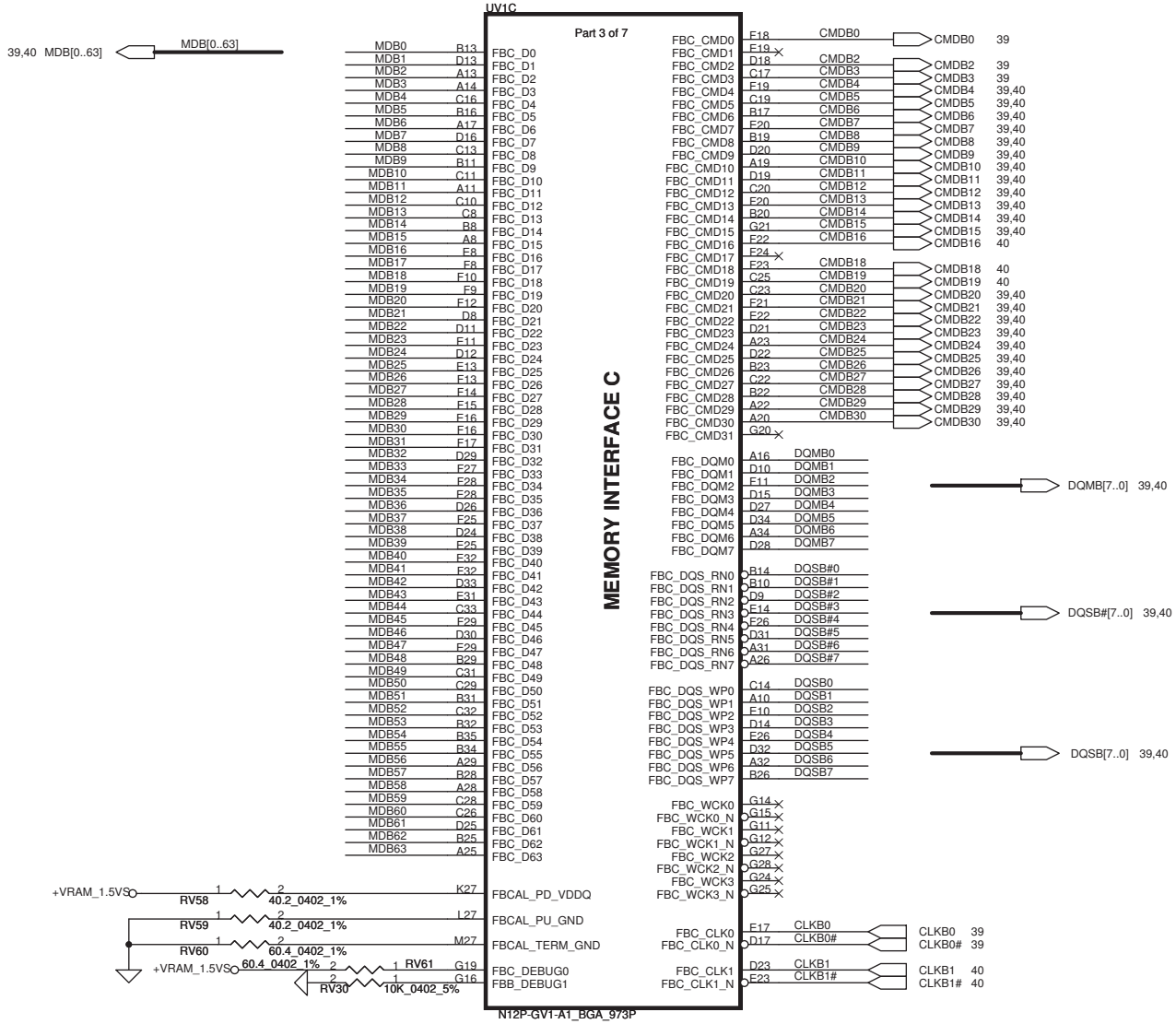

Mode E - Mirror Mode Mapping

	DATA Bus	
Address	0..31	32..63
CMD3	CKE_L	
CMD8	A8	A8
CMD2	CS0#_L	
CMD21	A7	A6
CMD24	A2	A1
CMD23	A11	A9
CMD26	A5	A4
CMD7	A0	A12
CMD15	CAS#	CAS#
CMD13	BA1	A3
CMD4	A9	A11
CMD18		CS0#_H
CMD29	BA0	BA0
CMD27	BA2	A15
CMD6	A3	BA1
CMD17		CS1#_H
CMD19		ODT_H
CMD22	A4	A5
CMD12	A13	A14
CMD28	WE#	A10
CMD10	A1	A2
CMD25	A10	WE#
CMD9	A12	A0
CMD1	CS1#_L	
CMD11	RAS#	RAS#
CMD0	ODT_L	
CMD5	A6	A7
CMD16		CKE_H
CMD20	RST	RST
CMD14	A14	A13
CMD30	A15	BA2

Security Classification	Compal Secret Data		
Issued Date	2010/05/27	Deciphered Date	2011/07/06

THIS SHEET OF ENGINEERING DRAWING IS THE PROPRIETARY PROPERTY OF COMPAL ELECTRONICS, INC. AND CONTAINS CONFIDENTIAL AND TRADE SECRET INFORMATION. THIS SHEET MAY NOT BE TRANSFERED FROM THE CUSTODY OF THE COMPETENT DIVISION OF R&D DEPARTMENT EXCEPT AS AUTHORIZED BY COMPAL ELECTRONICS, INC. NEITHER THIS SHEET NOR THE INFORMATION IT CONTAINS MAY BE USED BY OR DISCLOSED TO ANY THIRD PARTY WITHOUT PRIOR WRITTEN CONSENT OF COMPAL ELECTRONICS, INC.

Compal Electronics, Inc.

Title: VGA(7/12)-MEM Interface C

Size | Document Number: LA-6961P | Rev: 0.4

Date: Monday, January 24, 2011 | Sheet 36 of 54

Memory Partition A - Lower 32 bits

http://hobi-elektronika.net

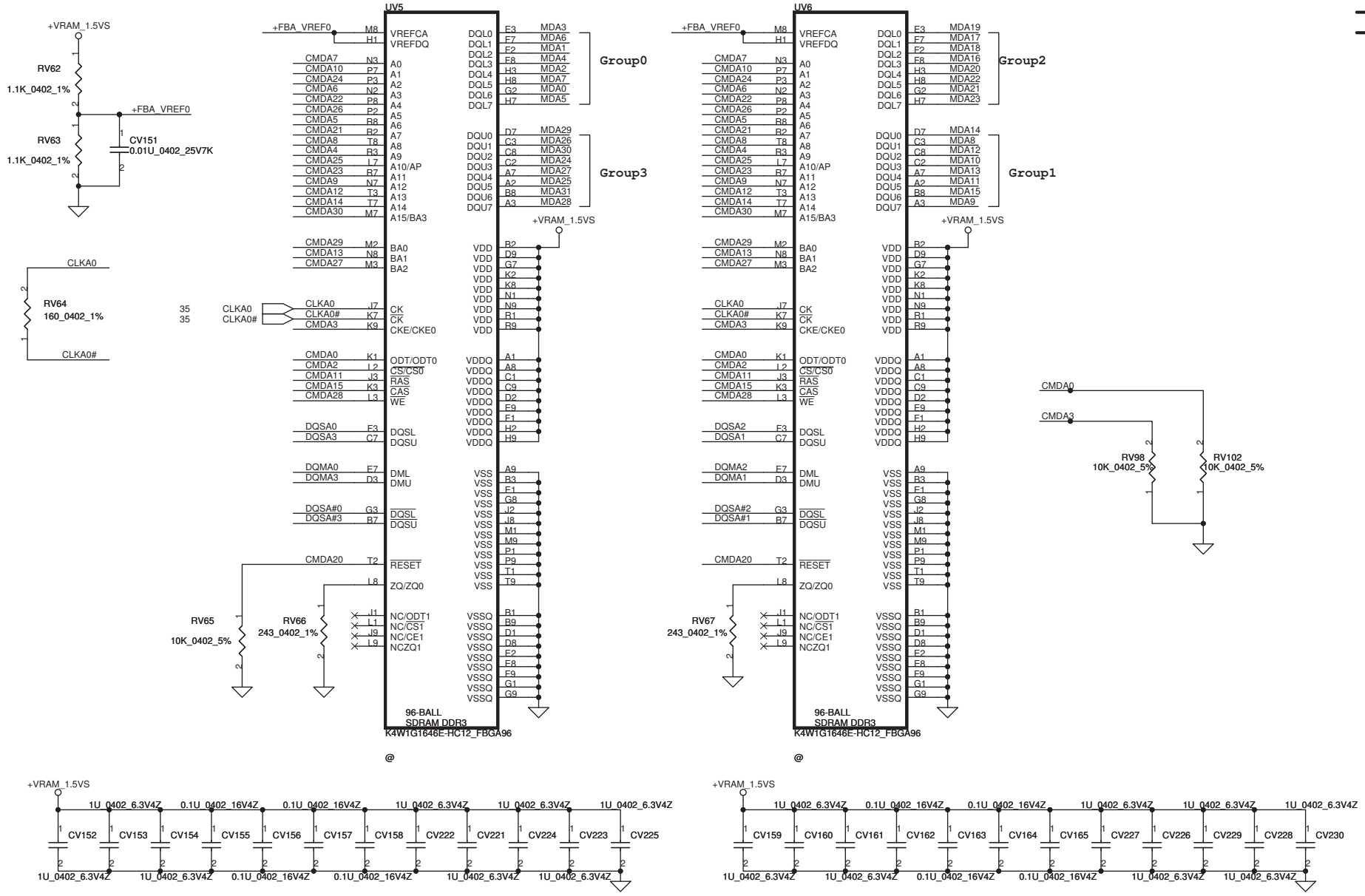

Mode E - Mirror Mode Mapping

	DATA Bus	
Address	0..31	32..63
CMD3	CKE_L	
CMD8	A8	A8
CMD2	CS0#_L	
CMD21	A7	A6
CMD24	A2	A1
CMD23	A11	A9
CMD26	A5	A4
CMD7	A0	A12
CMD15	CAS#	CAS#
CMD13	BA1	A3
CMD4	A9	A11
CMD18		CS0#_H
CMD29	BA0	BA0
CMD27	BA2	A15
CMD6	A3	BA1
CMD17		CS1#_H
CMD19		ODT_H
CMD22	A4	A5
CMD12	A13	A14
CMD28	WE#	A10
CMD10	A1	A2
CMD25	A10	WE#
CMD9	A12	A0
CMD1	CS1#_L	
CMD11	RAS#	RAS#
CMD0	ODT_L	
CMD5	A6	A7
CMD16		CKE_H
CMD20	RST	RST
CMD14	A14	A13
CMD30	A15	BA2

THIS SHEET OF ENGINEERING DRAWING IS THE PROPRIETARY PROPERTY OF COMPAL ELECTRONICS, INC. AND CONTAINS CONFIDENTIAL AND TRADE SECRET INFORMATION. THIS SHEET MAY NOT BE TRANSFERED FROM THE CUSTODY OF THE COMPETENT DIVISION OF R&D DEPARTMENT EXCEPT AS AUTHORIZED BY COMPAL ELECTRONICS, INC. NEITHER THIS SHEET NOR THE INFORMATION IT CONTAINS MAY BE USED BY OR DISCLOSED TO ANY THIRD PARTY WITHOUT PRIOR WRITTEN CONSENT OF COMPAL ELECTRONICS, INC.

Security Classification	Compal Secret Data		
Issued Date	2010/05/27	Deciphered Date	2011/07/06

Compal Electronics, Inc.

Title: VGA(8/12)-VRAM A Lower

Size | Document Number: LA-6961P | Rev: 0.4

Date: Monday, January 24, 2011 | Sheet 37 of 54

Memory Partition A - Upper 32 bits

http://hobi-elektronika.net

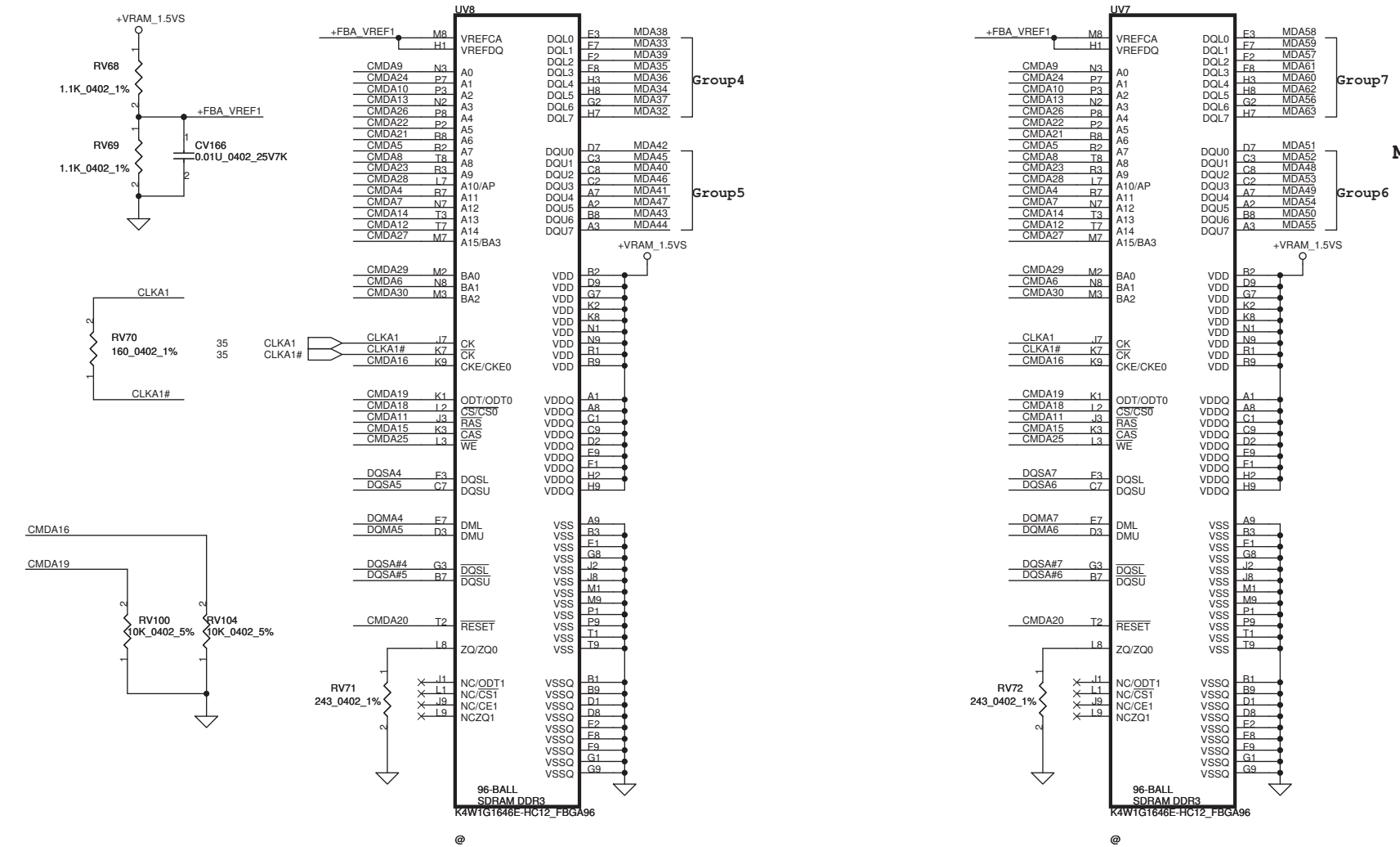

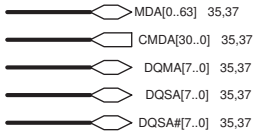

Mode E - Mirror Mode Mapping

	DATA Bus	
Address	0..31	32..63
CMD3	CKE_L	
CMD8	A8	A8
CMD2	CS0#_L	
CMD21	A7	A6
CMD24	A2	A1
CMD23	A11	A9
CMD26	A5	A4
CMD7	A0	A12
CMD15	CAS#	CAS#
CMD13	BA1	A3
CMD4	A9	A11
CMD18		CS0#_H
CMD29	BA0	BA0
CMD27	BA2	A15
CMD6	A3	BA1
CMD17		CS1#_H
CMD19		ODT_H
CMD22	A4	A5
CMD12	A13	A14
CMD28	WE#	A10
CMD10	A1	A2
CMD25	A10	WE#
CMD9	A12	A0
CMD1	CS1#_L	
CMD11	RAS#	RAS#
CMD0	ODT_L	
CMD5	A6	A7
CMD16		CKE_H
CMD20	RST	RST
CMD14	A14	A13
CMD30	A15	BA2

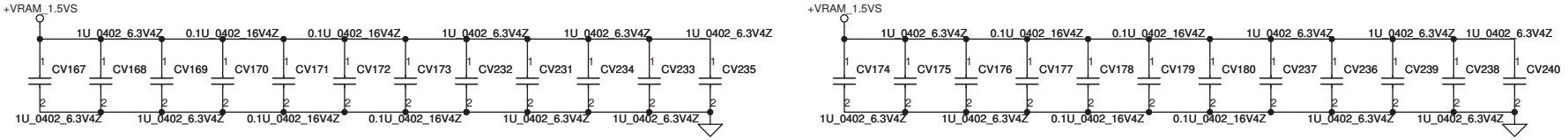

Security Classification	Compal Secret Data		
Issued Date	2010/05/27	Deciphered Date	2011/07/06

THIS SHEET OF ENGINEERING DRAWING IS THE PROPRIETARY PROPERTY OF COMPAL ELECTRONICS, INC. AND CONTAINS CONFIDENTIAL AND TRADE SECRET INFORMATION. THIS SHEET MAY NOT BE TRANSFERED FROM THE CUSTODY OF THE COMPETENT DIVISION OF R&D DEPARTMENT EXCEPT AS AUTHORIZED BY COMPAL ELECTRONICS, INC. NEITHER THIS SHEET NOR THE INFORMATION IT CONTAINS MAY BE USED BY OR DISCLOSED TO ANY THIRD PARTY WITHOUT PRIOR WRITTEN CONSENT OF COMPAL ELECTRONICS, INC.

Compal Electronics, Inc.

Title: VGA(9/12)-VRAM A Upper

Size | Document Number: LA-6961P | Rev: 0.4

Date: Monday, January 24, 2011 | Sheet 38 of 54

Memory Partition C - Lower 32 bits

http://hobi-elektronika.net

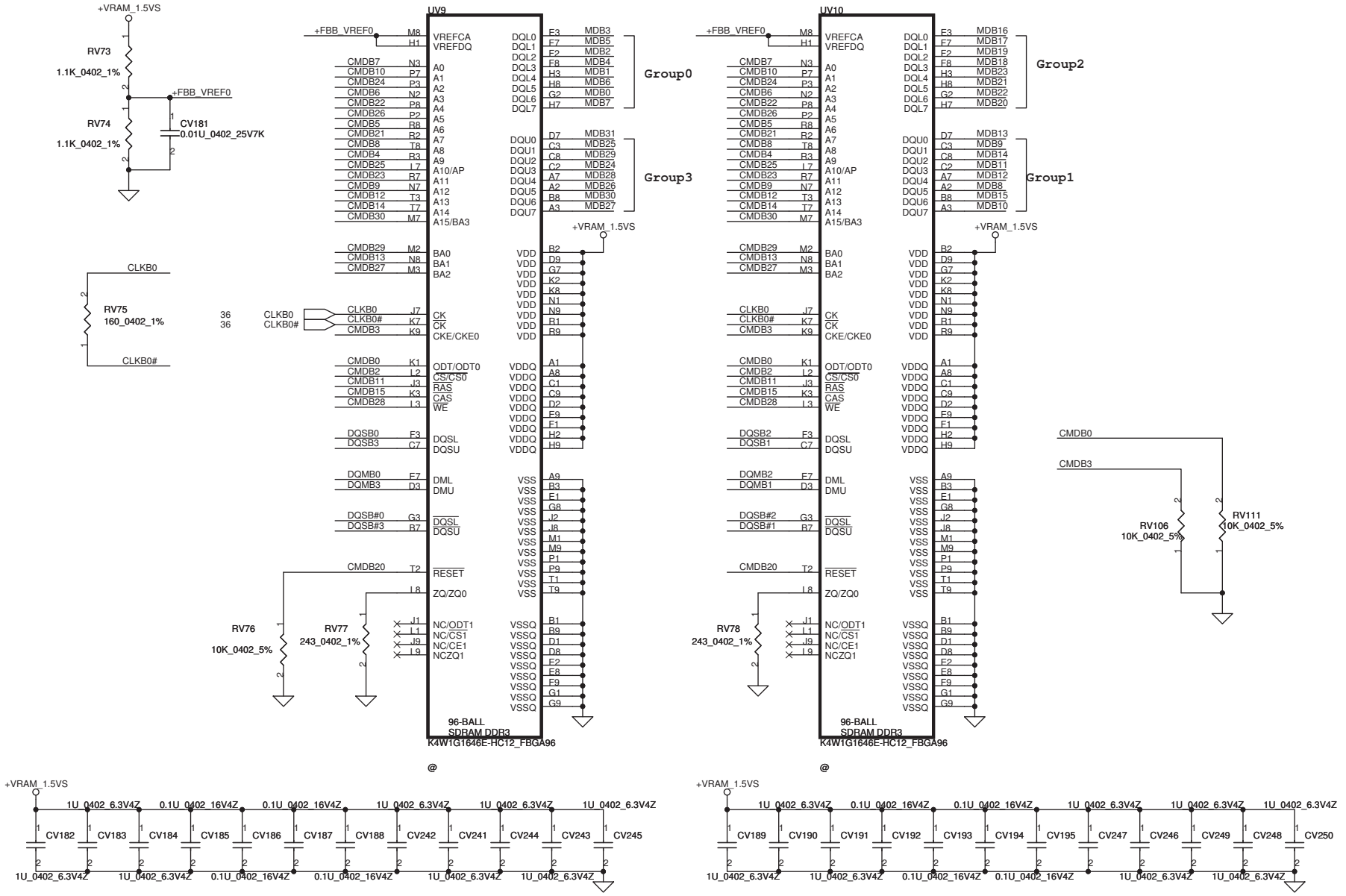

Mode E - Mirror Mode Mapping

	DATA Bus	
Address	0..31	32..63
CMD3	CKE_L	
CMD8	A8	A8
CMD2	CS0#_L	
CMD21	A7	A6
CMD24	A2	A1
CMD23	A11	A9
CMD26	A5	A4
CMD7	A0	A12
CMD15	CAS#	CAS#
CMD13	BA1	A3
CMD4	A9	A11
CMD18		CS0#_H
CMD29	BA0	BA0
CMD27	BA2	A15
CMD6	A3	BA1
CMD17		CS1#_H
CMD19		ODT_H
CMD22	A4	A5
CMD12	A13	A14
CMD28	WE#	A10
CMD10	A1	A2
CMD25	A10	WE#
CMD9	A12	A0
CMD1	CS1#_L	
CMD11	RAS#	RAS#
CMD0	ODT_L	
CMD5	A6	A7
CMD16		CKE_H
CMD20	RST	RST
CMD14	A14	A13
CMD30	A15	BA2

Security Classification	Compal Secret Data		
Issued Date	2010/05/27	Deciphered Date	2011/07/06

THIS SHEET OF ENGINEERING DRAWING IS THE PROPRIETARY PROPERTY OF COMPAL ELECTRONICS, INC. AND CONTAINS CONFIDENTIAL AND TRADE SECRET INFORMATION. THIS SHEET MAY NOT BE TRANSFERED FROM THE CUSTODY OF THE COMPETENT DIVISION OF R&D DEPARTMENT EXCEPT AS AUTHORIZED BY COMPAL ELECTRONICS, INC. NEITHER THIS SHEET NOR THE INFORMATION IT CONTAINS MAY BE USED BY OR DISCLOSED TO ANY THIRD PARTY WITHOUT PRIOR WRITTEN CONSENT OF COMPAL ELECTRONICS, INC.

Compal Electronics, Inc.

Title: VGA(10/12)-VRAM C Lower

Size: Custom | Document Number: LA-6961P | Rev: 0.4

Date: Monday, January 24, 2011 | Sheet 39 of 54

http://hobi-elektronika.net

Memory Partition C - Upper 32 bits

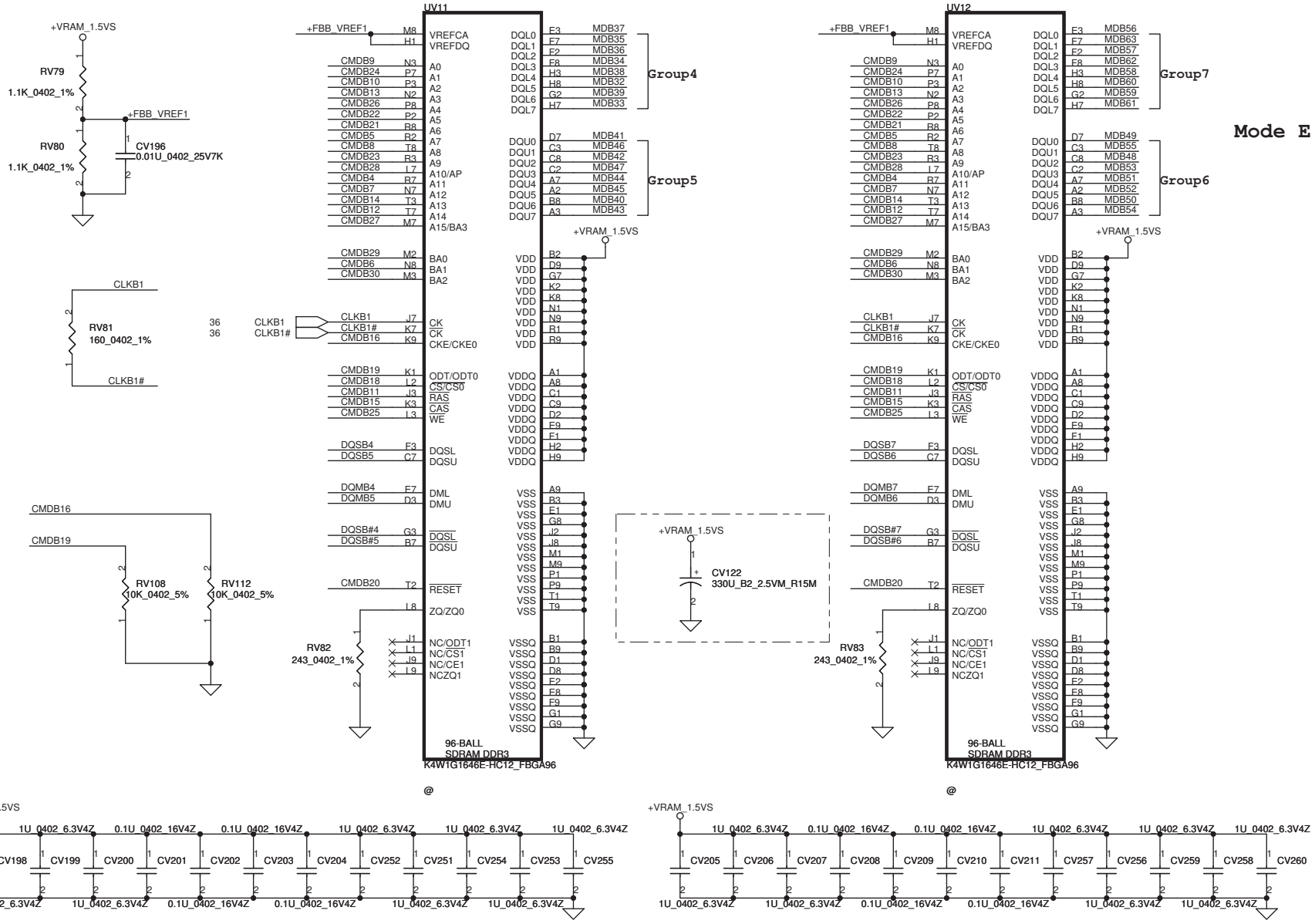

Mode E - Mirror Mode Mapping

	DATA Bus	
Address	0..31	32..63
CMD3	CKE_L	
CMD8	A8	A8
CMD2	CS0#_L	
CMD21	A7	A6
CMD24	A2	A1
CMD23	A11	A9
CMD26	A5	A4
CMD7	A0	A12
CMD15	CAS#	CAS#
CMD13	BA1	A3
CMD4	A9	A11
CMD18		CS0#_H
CMD29	BA0	BA0
CMD27	BA2	A15
CMD6	A3	BA1
CMD17		CS1#_H
CMD19		ODT_H
CMD22	A4	A5
CMD12	A13	A14
CMD28	WE#	A10
CMD10	A1	A2
CMD25	A10	WE#
CMD9	A12	A0
CMD1	CS1#_L	
CMD11	RAS#	RAS#
CMD0	ODT_L	
CMD5	A6	A7
CMD16		CKE_H
CMD20	RST	RST
CMD14	A14	A13
CMD30	A15	BA2

Security Classification	Compal Secret Data		
Issued Date	2010/05/27	Deciphered Date	2011/07/06

THIS SHEET OF ENGINEERING DRAWING IS THE PROPRIETARY PROPERTY OF COMPAL ELECTRONICS, INC. AND CONTAINS CONFIDENTIAL AND TRADE SECRET INFORMATION. THIS SHEET MAY NOT BE TRANSFERED FROM THE CUSTODY OF THE COMPETENT DIVISION OF R&D DEPARTMENT EXCEPT AS AUTHORIZED BY COMPAL ELECTRONICS, INC. NEITHER THIS SHEET NOR THE INFORMATION IT CONTAINS MAY BE USED BY OR DISCLOSED TO ANY THIRD PARTY WITHOUT PRIOR WRITTEN CONSENT OF COMPAL ELECTRONICS, INC.

Compal Electronics, Inc.

Title: VGA(11/12)-VRAM C Upper

Size: Custom | Document Number: LA-6961P | Rev: 0.4

Date: Monday, January 24, 2011 | Sheet 40 of 54

http://hobi-elektronika.net

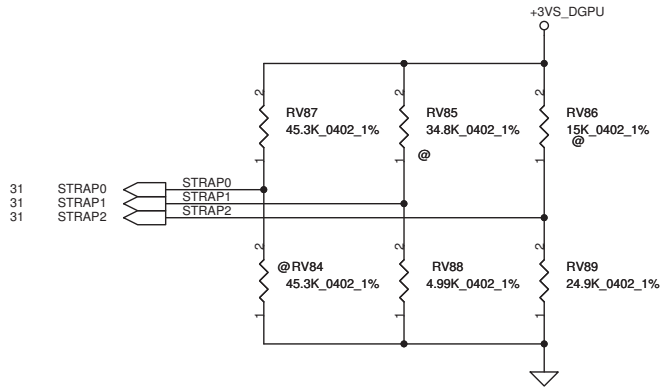

Physical Strapping pin	Power Rail	Logical Strapping Bit3	Logical Strapping Bit2	Logical Strapping Bit1	Logical Strapping Bit0
ROM_SO	+3VS	XCLK_417	FB_0_BAR_SIZE	SMB_ALT_ADDR	VGA_DEVICE
ROM_SCLK	+3VS	PCI_DEVID[4]	SUB_VENDOR	SLOT_CLK_CFG	PEX_PLLEN_TERM
ROM_SI	+3VS	RAMCFG[3]	RAMCFG[2]	RAMCFG[1]	RAMCFG[0]
STRAP2	+3VS	PCI_DEVID[3]	PCI_DEVID[2]	PCI_DEVID[1]	PCI_DEVID[0]
STRAP1	+3VS	3GIO_PADCFG[3]	3GIO_PADCFG[2]	3GIO_PADCFG[1]	3GIO_PADCFG[0]
STRAP0	+3VS	USER[3]	USER[2]	USER[1]	USER[0]

Resistor Values	Pull-up to +3VS	Pull-down to Gnd
5K	1000	0000
10K	1001	0001
15K	1010	0010
20K	1011	0011
25K	1100	0100
30K	1101	0101
35K	1110	0110
45K	1111	0111

GPU	DeviceID	ROM_SCLK	STRAP2
N12M-GE	0x0A7A	Pull up 15K	Pull up 15K
N12P-GS	0x0DF4	Pull up 15K	Pull down 25K
N12P-GE	0x0DF5	Pull up 15K	Pull down 30K

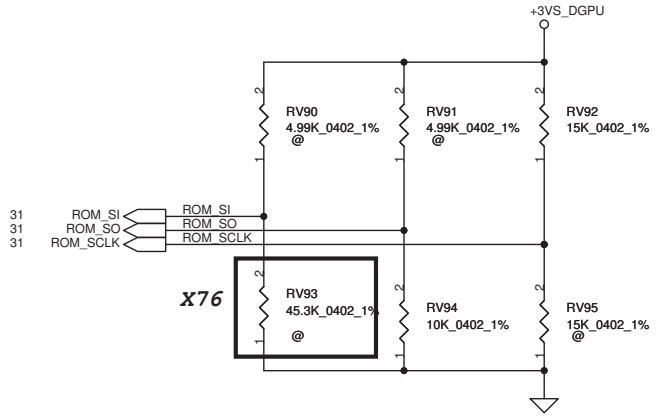

N12P-GS-A1 :
ROM_SO : PL-10K
ROM_CLK : PH-15K
ROM_SI : PL45.3K (Samsung 2GB)
Strap 2 : PL-5K
Strap 1 : PH-35K
Strap 0 : PH-45K

Hynix (900MHZ) 64MX16 H5TQ1G63DFR-11C SA000041S20	1GB	0010	PD 15K (SD034150280)
Hynix (900MHZ) 128MX16 H5TQ2G63BFR-11C SA00003YO00	2GB	0110	PD 34.8k(SD034348280)
Samsung (900MHZ) 64MX16 K4W1G1646E-HC11 SA000041T00	1GB	0011	PD 20K (SD034200280)
Samsung (900MHZ) 128M16 K4W2G1646C-HC11 SA000047Q00	2GB	0111	PD 45.3K(SD034453280)

SUB_VENDOR	
0	No VBIOS ROM
1	BIOS ROM is present (Default)

XCLK_417	
0	277MHz (Default)
1	Reserved

FB_0_BAR_SIZE	
0	256MB (Default)
1	Reserved

USER Straps	
User[3:0]	
1000-1100	Customer defined

3GIO_PADCFG	
3GIO_PADCFG[3:0]	
0110	Notebook Default

PEX_PLL_EN_TERM	
0	Disable (Default)
1	Enable

SLOT_CLK_CFG	
0	GPU and MCH don't share a common reference clock
1	GPU and MCH share a common reference clock (Default)

SMBUS_ALT_ADDR	
0	0x9E (Default)
1	0x9C (Multi-GPU usage)

VGA_DEVICE	
0	3D Device
1	VGA Device (Default)

Security Classification	Compal Secret Data		
Issued Date	2010/05/27	Deciphered Date	2011/07/06

THIS SHEET OF ENGINEERING DRAWING IS THE PROPRIETARY PROPERTY OF COMPAL ELECTRONICS, INC. AND CONTAINS CONFIDENTIAL AND TRADE SECRET INFORMATION. THIS SHEET MAY NOT BE TRANSFERED FROM THE CUSTODY OF THE COMPETENT DIVISION OF R&D DEPARTMENT EXCEPT AS AUTHORIZED BY COMPAL ELECTRONICS, INC. NEITHER THIS SHEET NOR THE INFORMATION IT CONTAINS MAY BE USED BY OR DISCLOSED TO ANY THIRD PARTY WITHOUT PRIOR WRITTEN CONSENT OF COMPAL ELECTRONICS, INC.

Compal Electronics, Inc.

Title: VGA(12/12)-MISC

Size: Custom | Document Number: LA-6961P | Rev: 0.4

Date: Monday, January 24, 2011 | Sheet 41 of 54

http://hobi-elektronika.net

Touch pad Connector

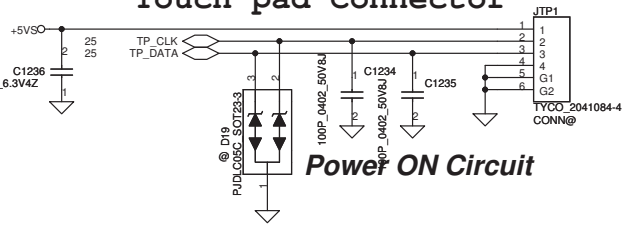

Power ON Circuit

For Debug Only

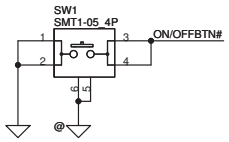

MB_Power On/Off SW

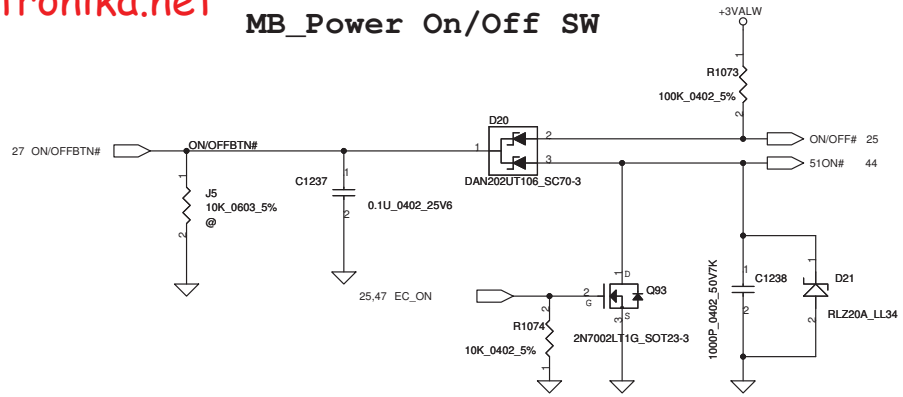

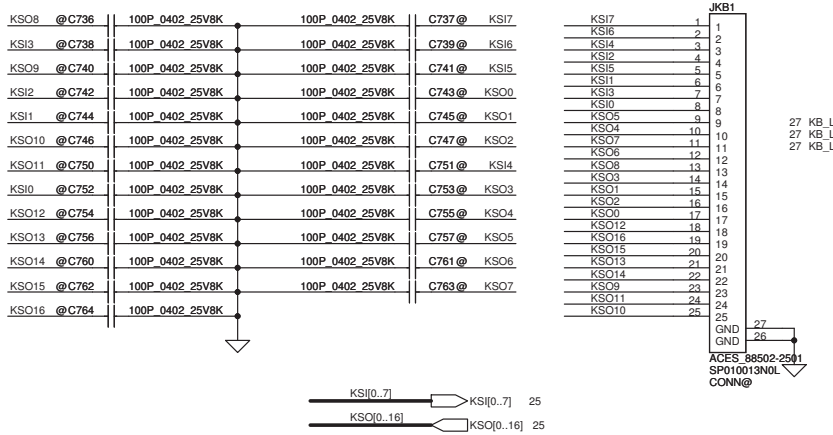

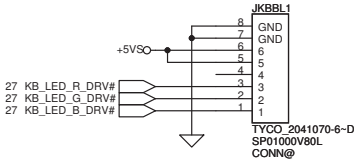

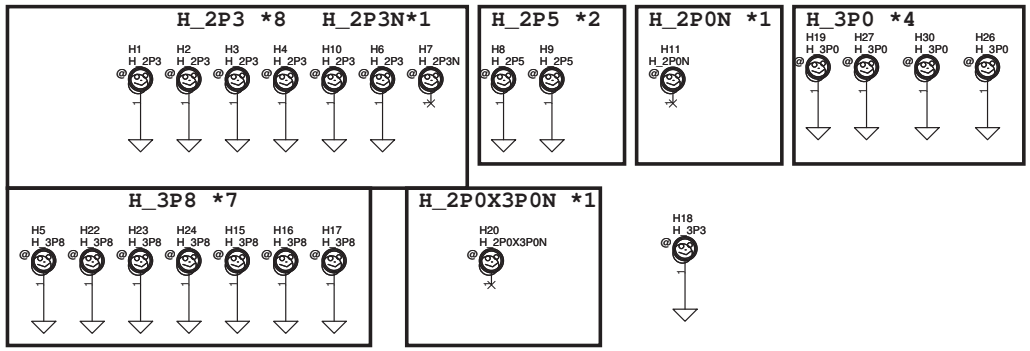

Security Classification	Compal Secret Data		
Issued Date	2009/07/25	Deciphered Date	2011/07/06

THIS SHEET OF ENGINEERING DRAWING IS THE PROPRIETARY PROPERTY OF COMPAL ELECTRONICS, INC. AND CONTAINS CONFIDENTIAL AND TRADE SECRET INFORMATION. THIS SHEET MAY NOT BE TRANSFERED FROM THE CUSTODY OF THE COMPETENT DIVISION OF R&D DEPARTMENT EXCEPT AS AUTHORIZED BY COMPAL ELECTRONICS, INC. NEITHER THIS SHEET NOR THE INFORMATION IT CONTAINS MAY BE USED BY OR DISCLOSED TO ANY THIRD PARTY WITHOUT PRIOR WRITTEN CONSENT OF COMPAL ELECTRONICS, INC.

Compal Electronics, Inc.

Title: **SW/TP/SCREW**

Size: Custom | Document Number: LA-6961P | Rev: 0.4

Date: Monday, January 24, 2011 | Sheet 42 of 54

http://hobi-elektronika.net

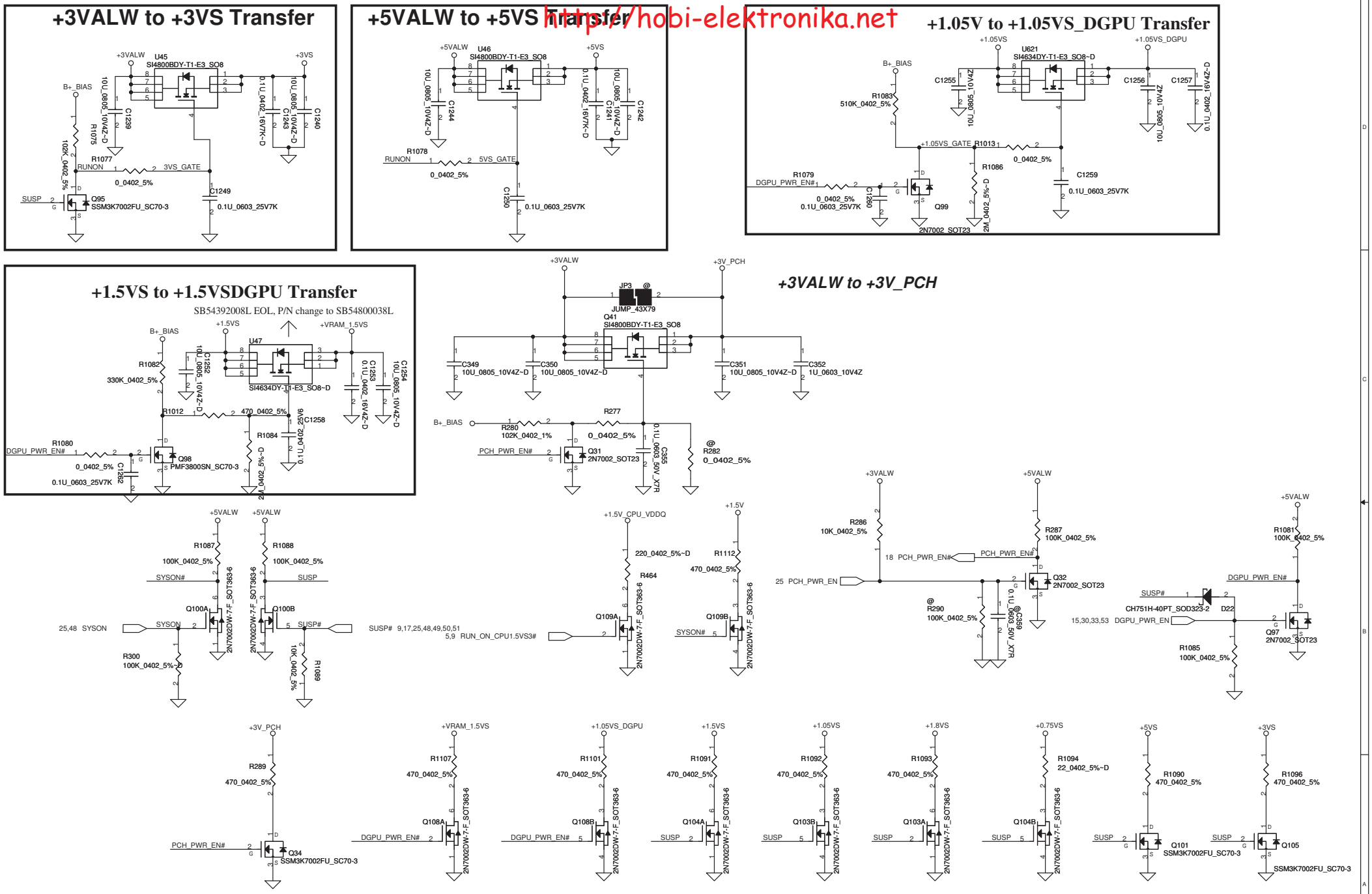

Security Classification	Compal Secret Data		
Issued Date	2009/07/25	Deciphered Date	2011/07/06

THIS SHEET OF ENGINEERING DRAWING IS THE PROPRIETARY PROPERTY OF COMPAL ELECTRONICS, INC. AND CONTAINS CONFIDENTIAL AND TRADE SECRET INFORMATION. THIS SHEET MAY NOT BE TRANSFERED FROM THE CUSTODY OF THE COMPETENT DIVISION OF R&D DEPARTMENT EXCEPT AS AUTHORIZED BY COMPAL ELECTRONICS, INC. NEITHER THIS SHEET NOR THE INFORMATION IT CONTAINS MAY BE USED BY OR DISCLOSED TO ANY THIRD PARTY WITHOUT PRIOR WRITTEN CONSENT OF COMPAL ELECTRONICS, INC.

Compal Electronics, Inc.

Title: **DC/DC INTERFACE**

Size: Custom | Document Number: LA-6961P | Rev: 0.4

Date: Monday, January 24, 2011 | Sheet 43 of 54

http://hobi-elektronika.net

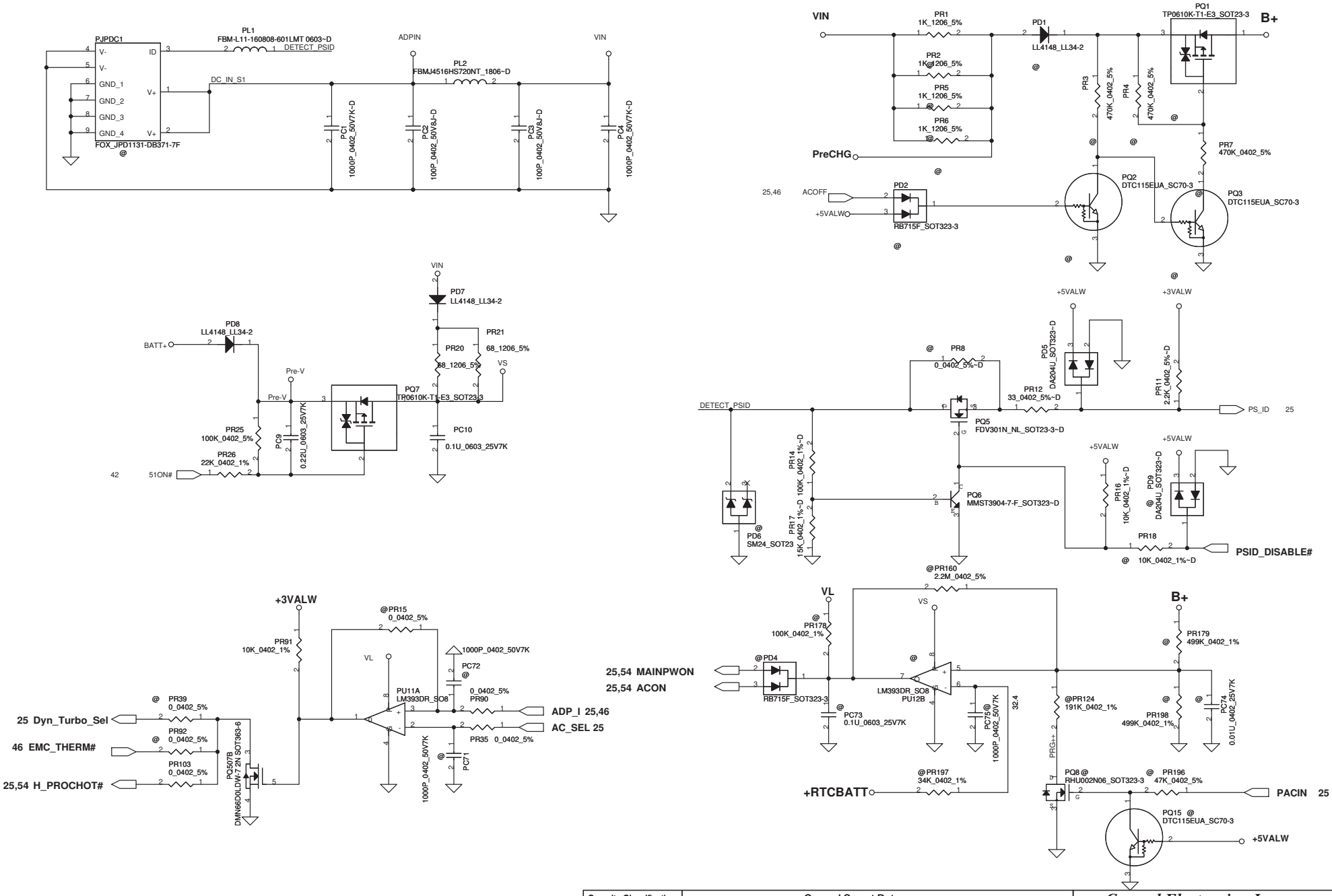

Security Classification	Compal Secret Data		
Issued Date	2009/12/01	Deciphered Date	2010/05/28

THIS SHEET OF ENGINEERING DRAWING IS THE PROPRIETARY PROPERTY OF COMPAL ELECTRONICS, INC. AND CONTAINS CONFIDENTIAL AND TRADE SECRET INFORMATION. THIS SHEET MAY NOT BE TRANSFERED FROM THE CUSTODY OF THE COMPETENT DIVISION OF R&D DEPARTMENT EXCEPT AS AUTHORIZED BY COMPAL ELECTRONICS, INC. NEITHER THIS SHEET NOR THE INFORMATION IT CONTAINS MAY BE USED BY OR DISCLOSED TO ANY THIRD PARTY WITHOUT PRIOR WRITTEN CONSENT OF COMPAL ELECTRONICS, INC.

Compal Electronics, Inc.

Title: **PWR-DCIN / Vin Detector**

Size: Custom | Document Number: **LA-6961P** | Rev: 0.1

Date: Monday, January 24, 2011 | Sheet 44 of 54

http://hobi-elektronika.net

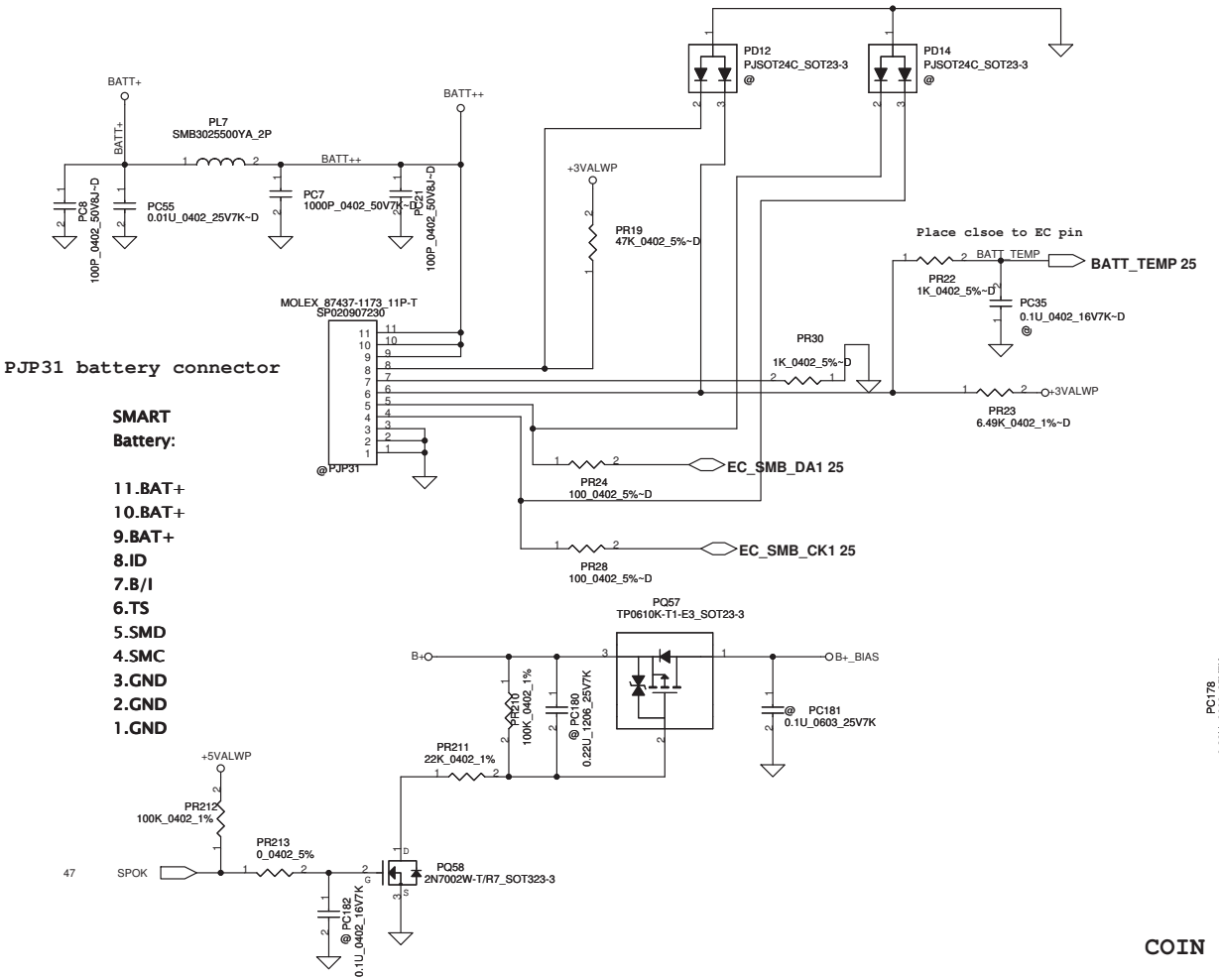

PJP31 battery connector

SMART Battery:

11.BAT+
10.BAT+
9.BAT+
8.ID
7.B/I
6.TS
5.SMD
4.SMC
3.GND
2.GND
1.GND

Battery Connect/OTP

PH3 under CPU botten side :
CPU thermal protection at 90 degree C
Recovery at 50 degree C

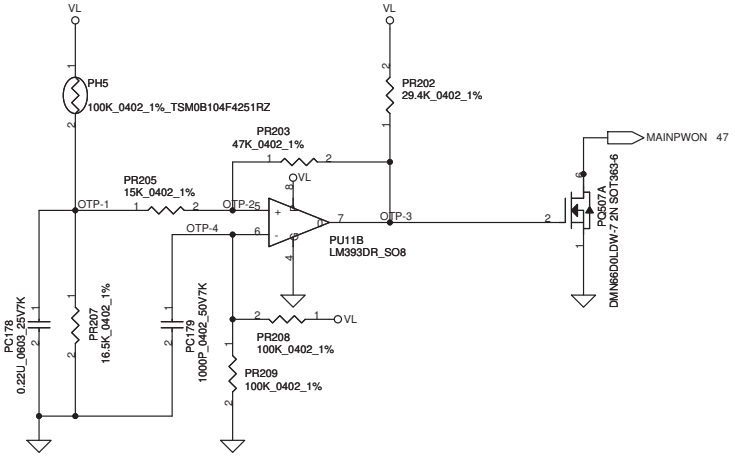

COIN RTC Battery

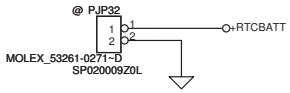

Security Classification	Compal Secret Data		
Issued Date	2009/12/01	Deciphered Date	2010/05/28

THIS SHEET OF ENGINEERING DRAWING IS THE PROPRIETARY PROPERTY OF COMPAL ELECTRONICS, INC. AND CONTAINS CONFIDENTIAL AND TRADE SECRET INFORMATION. THIS SHEET MAY NOT BE TRANSFERED FROM THE CUSTODY OF THE COMPETENT DIVISION OF R&D DEPARTMENT EXCEPT AS AUTHORIZED BY COMPAL ELECTRONICS, INC. NEITHER THIS SHEET NOR THE INFORMATION IT CONTAINS MAY BE USED BY OR DISCLOSED TO ANY THIRD PARTY WITHOUT PRIOR WRITTEN CONSENT OF COMPAL ELECTRONICS, INC.

Compal Electronics, Inc.

Title: **PWR-BATTERY CONN**

Size: Custom | Document Number: *LA-6961P* | Rev: 0.1

Date: Monday, January 24, 2011 | Sheet 45 of 54

http://hobi-elektronika.net

Iada=0~4.74A(90W/19V=4.736A)

ADP_I = 19.9*Iadapter*Rsense

CP = 85%*Iada ; CP = 4.07A

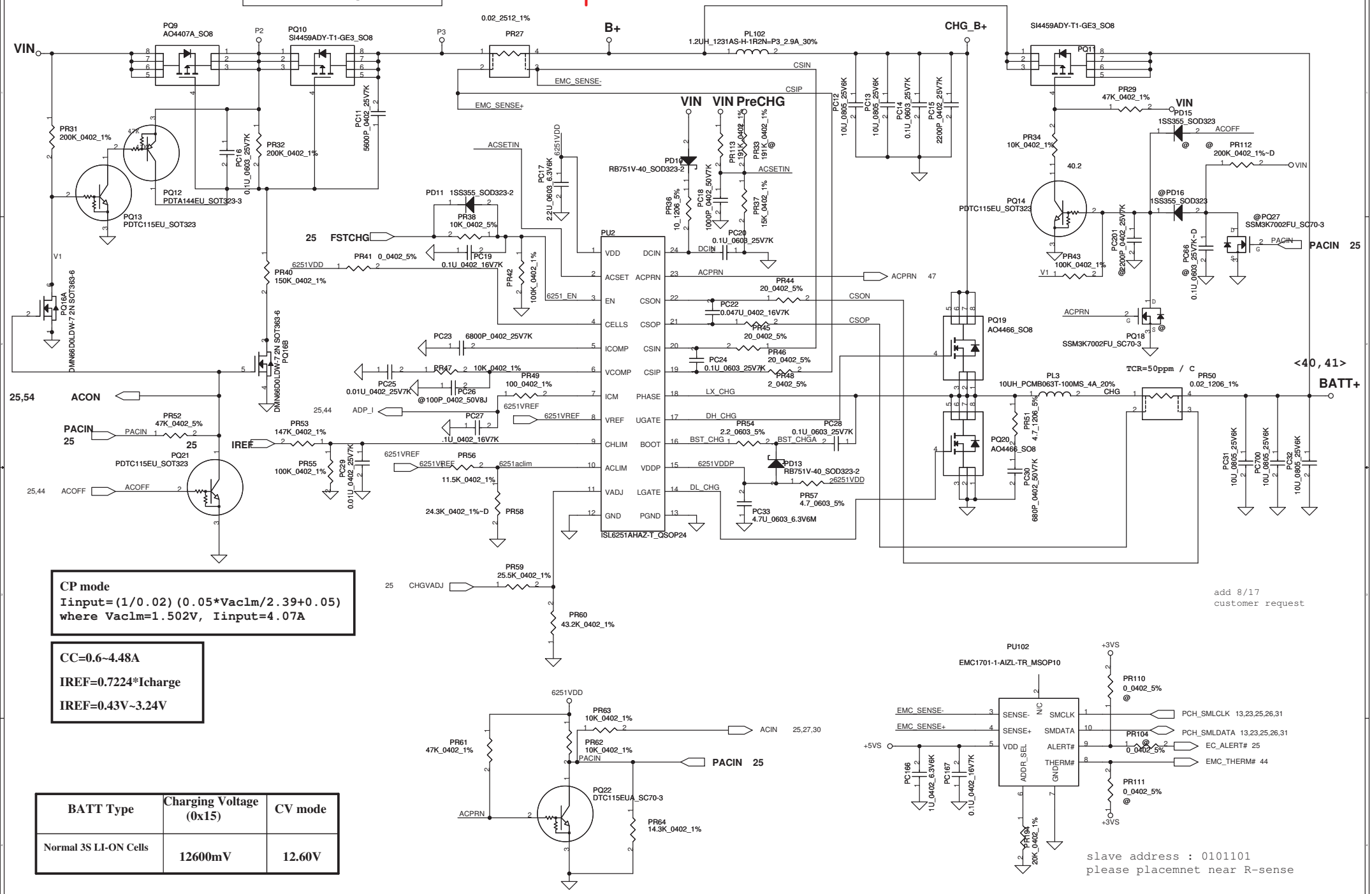

add 8/17
customer request

CP mode
Iinput=(1/0.02)(0.05*Vaclm/2.39+0.05)
where Vaclm=1.502V, Iinput=4.07A

CC=0.6~4.48A

IREF=0.7224*Icharge

IREF=0.43V~3.24V

BATT Type	Charging Voltage (0x15)	CV mode
Normal 3S LI-ON Cells	12600mV	12.60V

slave address : 0101101
please placemnet near R-sense

Security Classification	Compal Secret Data		
Issued Date	2009/12/01	Deciphered Date	2010/05/28

THIS SHEET OF ENGINEERING DRAWING IS THE PROPRIETARY PROPERTY OF COMPAL ELECTRONICS, INC. AND CONTAINS CONFIDENTIAL AND TRADE SECRET INFORMATION. THIS SHEET MAY NOT BE TRANSFERED FROM THE CUSTODY OF THE COMPETENT DIVISION OF R&D DEPARTMENT EXCEPT AS AUTHORIZED BY COMPAL ELECTRONICS, INC. NEITHER THIS SHEET NOR THE INFORMATION IT CONTAINS MAY BE USED BY OR DISCLOSED TO ANY THIRD PARTY WITHOUT PRIOR WRITTEN CONSENT OF COMPAL ELECTRONICS, INC.

Compal Electronics, Inc.

Title: PWR-CHARGER

Size: Custom | Document Number: LA-6961P | Rev: 0.1

Date: Monday, January 24, 2011 | Sheet 46 of 54

http://hobi-elektronika.net

Note:
Use TPS51125 IC can remove RTC refernece LDO
Use TPS51427 IC must keep RTC refernece LDO

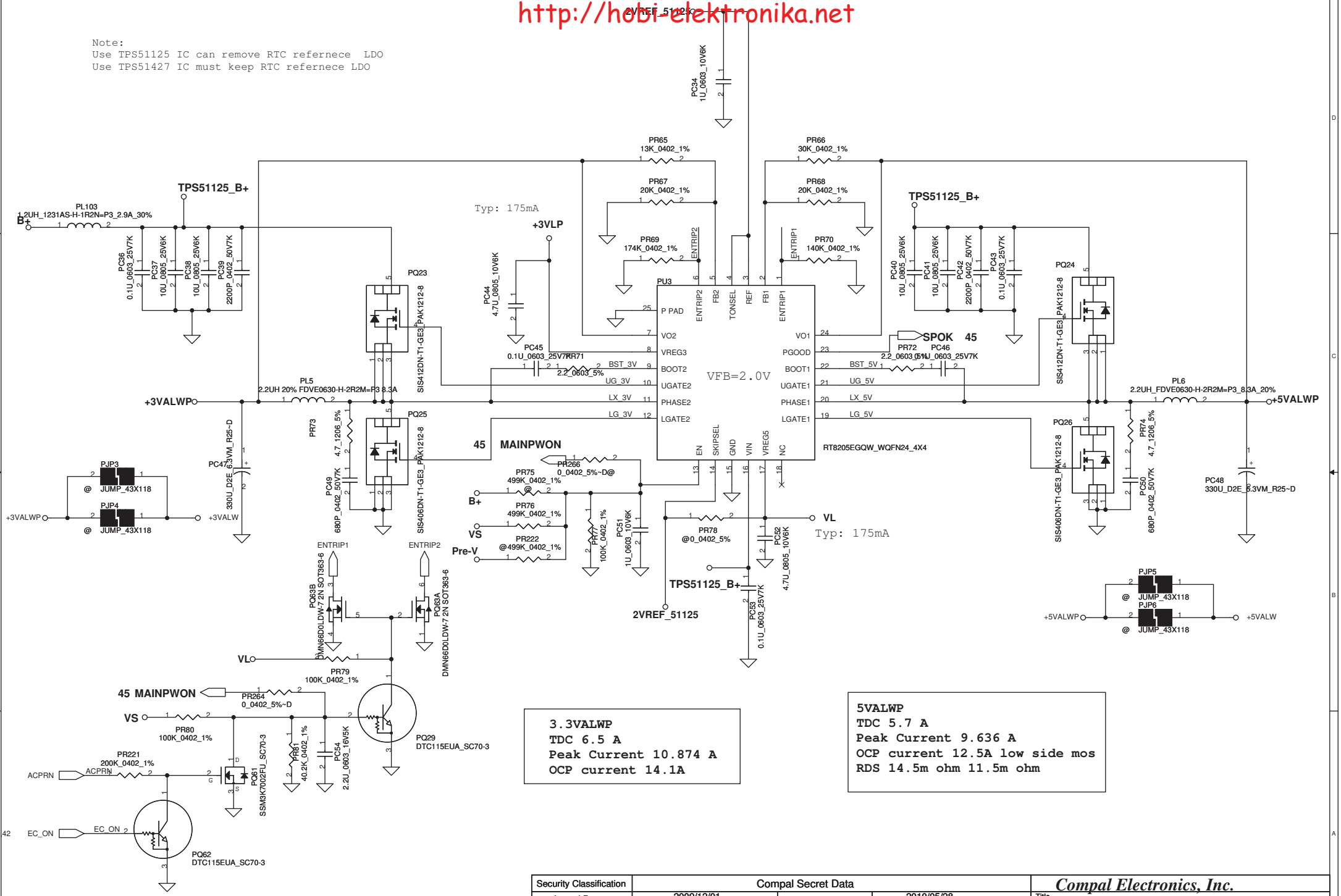

3.3VALWP
TDC 6.5 A
Peak Current 10.874 A
OCP current 14.1A

5VALWP
TDC 5.7 A
Peak Current 9.636 A
OCP current 12.5A low side mos
RDS 14.5m ohm 11.5m ohm

Security Classification	Compal Secret Data		
Issued Date	2009/12/01	Deciphered Date	2010/05/28

THIS SHEET OF ENGINEERING DRAWING IS THE PROPRIETARY PROPERTY OF COMPAL ELECTRONICS, INC. AND CONTAINS CONFIDENTIAL AND TRADE SECRET INFORMATION. THIS SHEET MAY NOT BE TRANSFERED FROM THE CUSTODY OF THE COMPETENT DIVISION OF R&D DEPARTMENT EXCEPT AS AUTHORIZED BY COMPAL ELECTRONICS, INC. NEITHER THIS SHEET NOR THE INFORMATION IT CONTAINS MAY BE USED BY OR DISCLOSED TO ANY THIRD PARTY WITHOUT PRIOR WRITTEN CONSENT OF COMPAL ELECTRONICS, INC.

Compal Electronics, Inc.

Title: 3VALWP/5VALWP

Size: Custom | Document Number: LA-6961P | Rev: 0.1

Date: Monday, January 24, 2011 | Sheet 47 of 54

http://hobi-elektronika.net

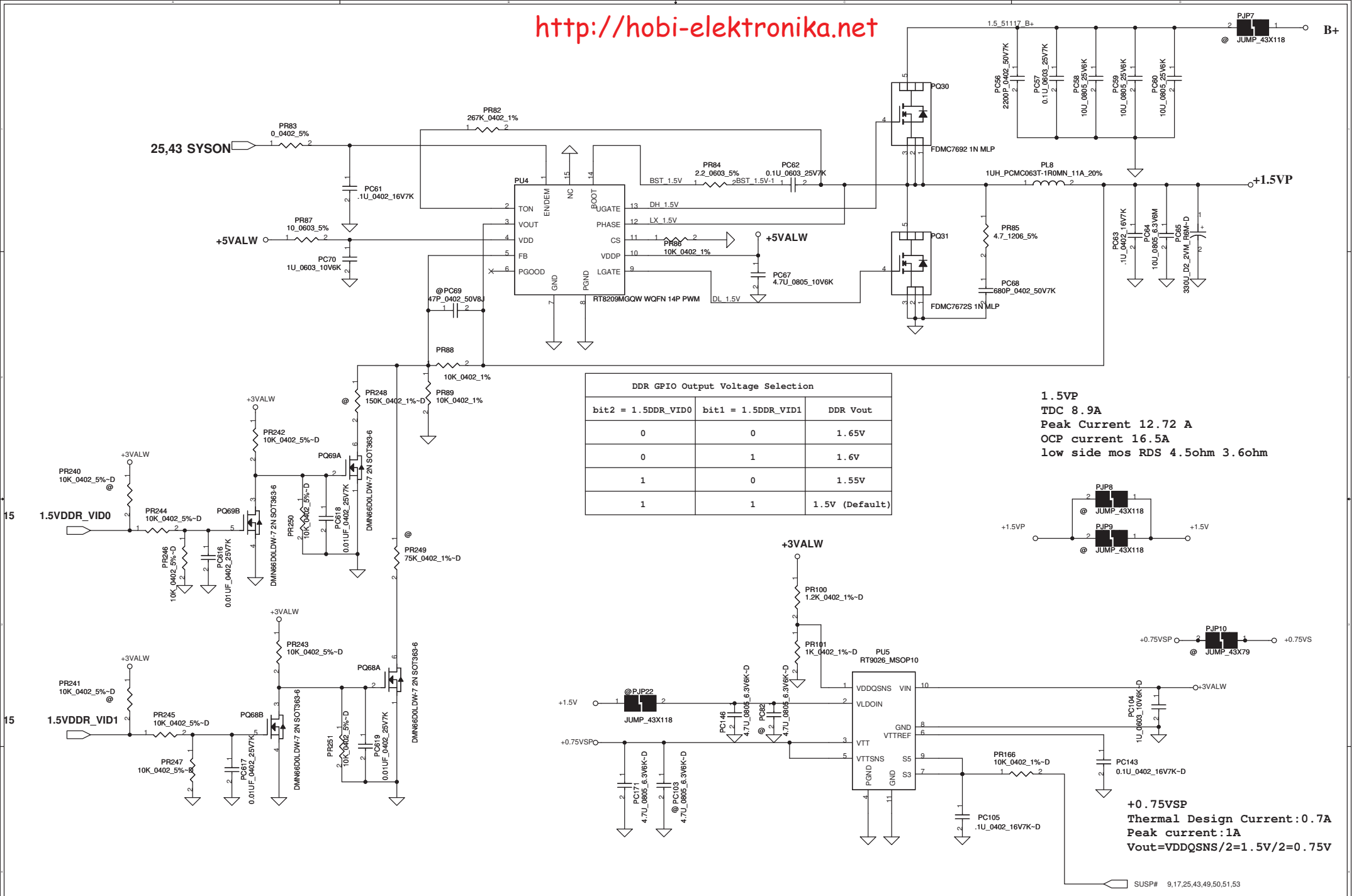

DDR GPIO Output Voltage Selection		
bit2 = 1.5DDR_VID0	bit1 = 1.5DDR_VID1	DDR Vout
0	0	1.65V
0	1	1.6V
1	0	1.55V
1	1	1.5V (Default)

1.5VP
TDC 8.9A
Peak Current 12.72 A
OCP current 16.5A
low side mos RDS 4.5ohm 3.6ohm

+0.75VSP
Thermal Design Current:0.7A
Peak current:1A
Vout=VDDQSNS/2=1.5V/2=0.75V

Security Classification	Compal Secret Data		
Issued Date	2009/12/01	Deciphered Date	2010/05/28

THIS SHEET OF ENGINEERING DRAWING IS THE PROPRIETARY PROPERTY OF COMPAL ELECTRONICS, INC. AND CONTAINS CONFIDENTIAL AND TRADE SECRET INFORMATION. THIS SHEET MAY NOT BE TRANSFERED FROM THE CUSTODY OF THE COMPETENT DIVISION OF R&D DEPARTMENT EXCEPT AS AUTHORIZED BY COMPAL ELECTRONICS, INC. NEITHER THIS SHEET NOR THE INFORMATION IT CONTAINS MAY BE USED BY OR DISCLOSED TO ANY THIRD PARTY WITHOUT PRIOR WRITTEN CONSENT OF COMPAL ELECTRONICS, INC.

Title: *PWR-+1.5VP/+0.75VSP*

Size: Custom | Document Number: *LA-6961P* | Rev: 0.1

Date: Monday, January 24, 2011 | Sheet 48 of 54

http://hobi-elektronika.net

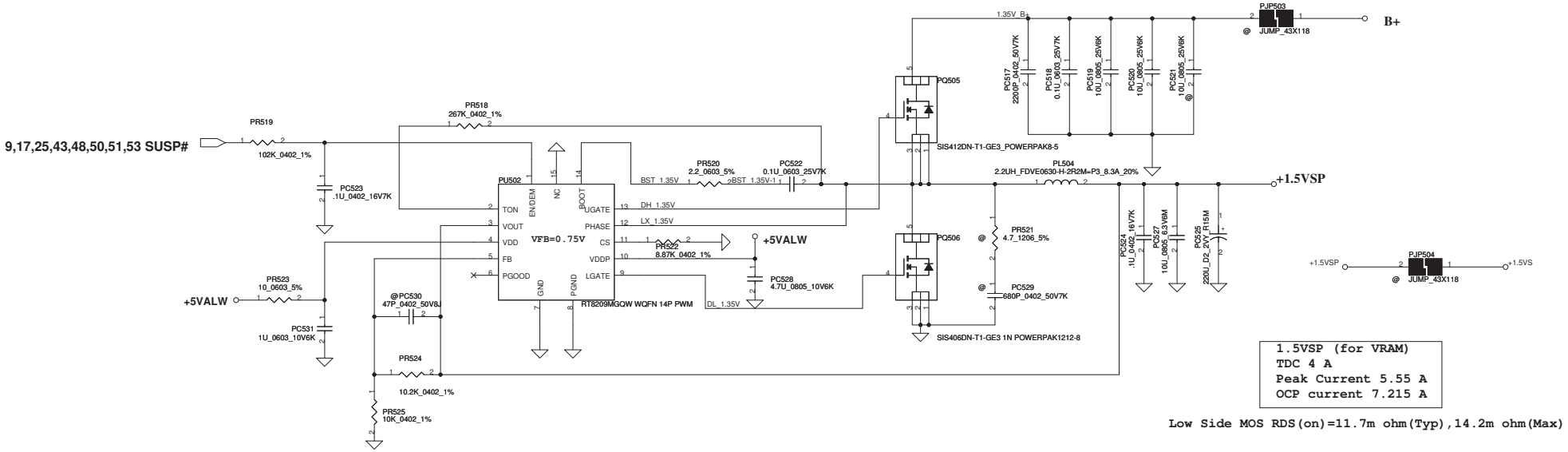

1.5VSP (for VRAM)
TDC 4 A
Peak Current 5.55 A
OCP current 7.215 A

Low Side MOS RDS(on)=11.7m ohm(Typ),14.2m ohm(Max)

Security Classification	Compal Secret Data		
Issued Date	2010/08/03	Deciphered Date	2011/08/03

THIS SHEET OF ENGINEERING DRAWING IS THE PROPRIETARY PROPERTY OF COMPAL ELECTRONICS, INC. AND CONTAINS CONFIDENTIAL AND TRADE SECRET INFORMATION. THIS SHEET MAY NOT BE TRANSFERED FROM THE CUSTODY OF THE COMPETENT DIVISION OF R&D DEPARTMENT EXCEPT AS AUTHORIZED BY COMPAL ELECTRONICS, INC. NEITHER THIS SHEET NOR THE INFORMATION IT CONTAINS MAY BE USED BY OR DISCLOSED TO ANY THIRD PARTY WITHOUT PRIOR WRITTEN CONSENT OF COMPAL ELECTRONICS, INC.

Compal Electronics, Inc.

Title: PWR-+VCCSAP/+1.5VSP

Size: C | Document Number: LA-6961P | Rev: 0.1

Date: Monday, January 24, 2011 | Sheet 49 of 54

http://hobi-elektronika.net

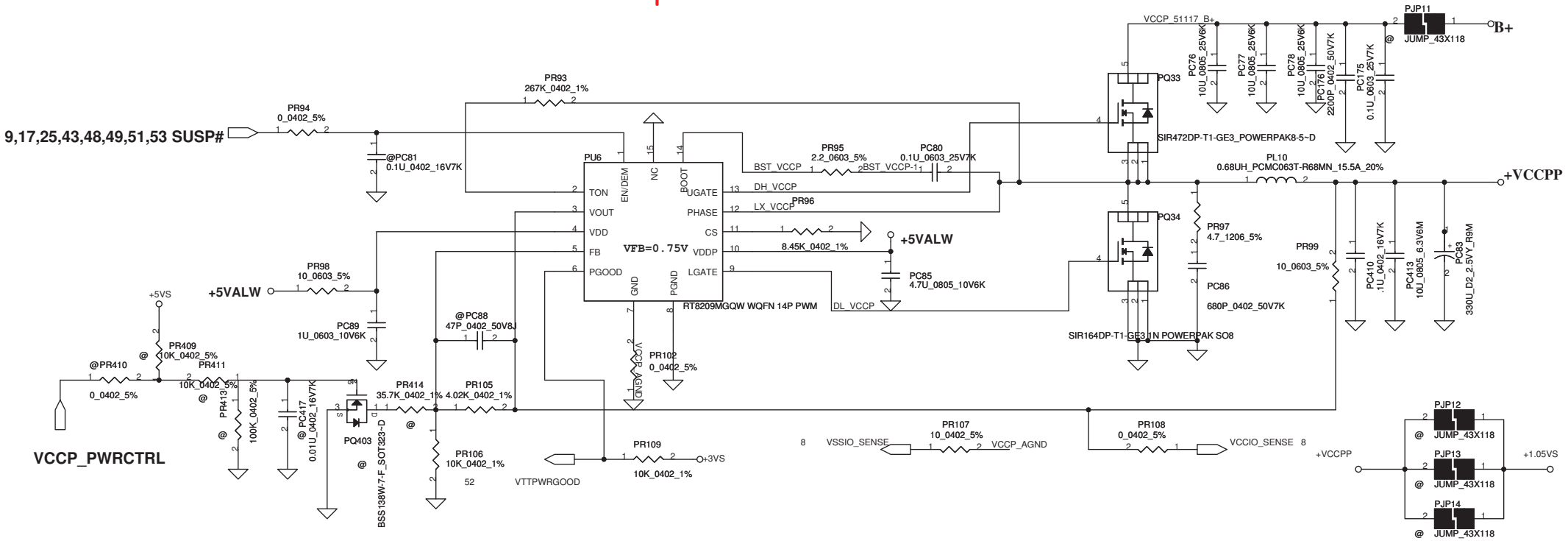

VCCP
TDC 11.5 A
Peak Current 16.458 A
OCP 21.4 currentA
low side mos RDS 4.5 ohm(MAX)
3.6ohm(MAX)

Security Classification	Compal Secret Data		
Issued Date	2009/12/01	Deciphered Date	2010/05/28

THIS SHEET OF ENGINEERING DRAWING IS THE PROPRIETARY PROPERTY OF COMPAL ELECTRONICS, INC. AND CONTAINS CONFIDENTIAL AND TRADE SECRET INFORMATION. THIS SHEET MAY NOT BE TRANSFERED FROM THE CUSTODY OF THE COMPETENT DIVISION OF R&D DEPARTMENT EXCEPT AS AUTHORIZED BY COMPAL ELECTRONICS, INC. NEITHER THIS SHEET NOR THE INFORMATION IT CONTAINS MAY BE USED BY OR DISCLOSED TO ANY THIRD PARTY WITHOUT PRIOR WRITTEN CONSENT OF COMPAL ELECTRONICS, INC.

Compal Electronics, Inc.

Title: PWR+1.05VSP/+VCCPP

Size: Custom | Document Number: LA-6961P | Rev: 0.1

Date: Monday, January 24, 2011 | Sheet 50 of 54

http://hobi-elektronika.net

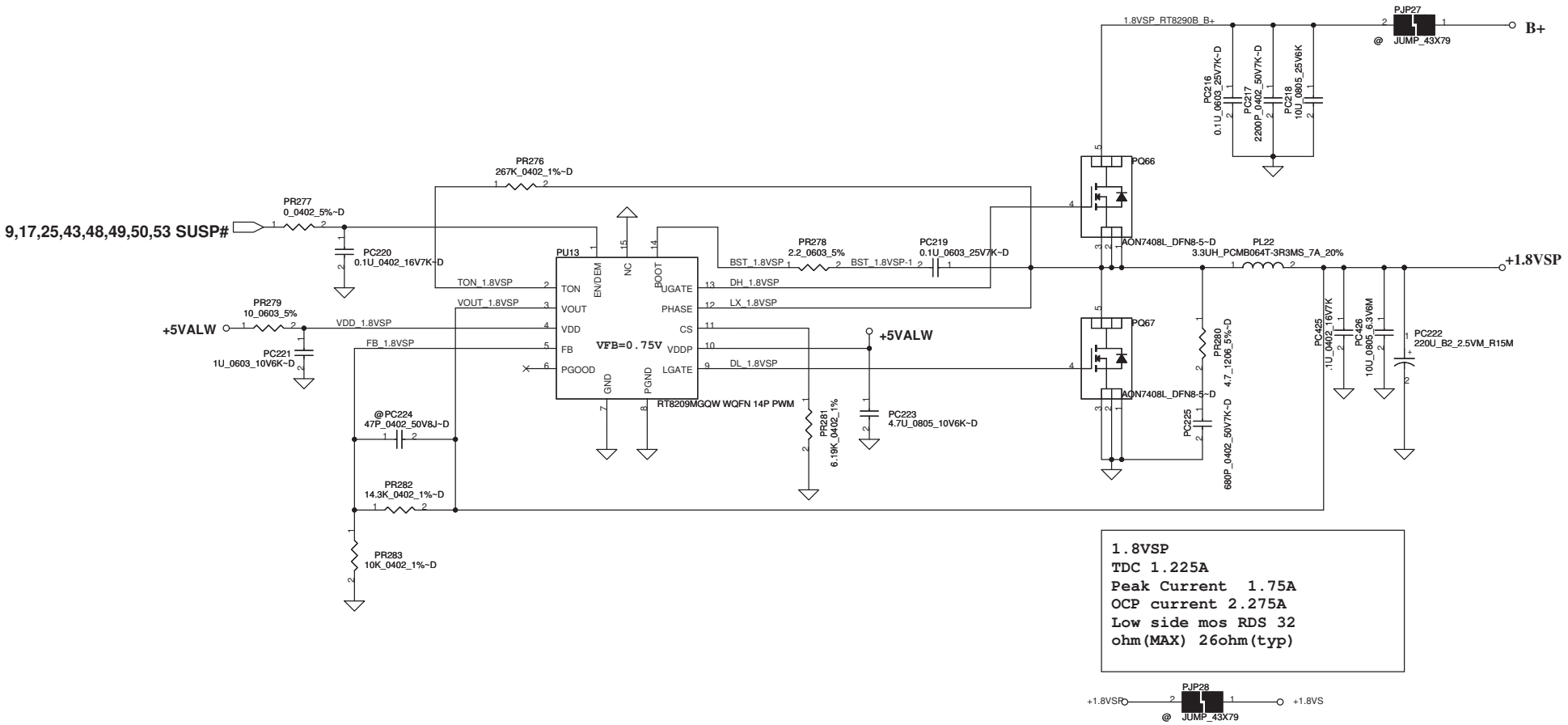

Security Classification	Compal Secret Data		
Issued Date	2009/12/01	Deciphered Date	2010/05/28

THIS SHEET OF ENGINEERING DRAWING IS THE PROPRIETARY PROPERTY OF COMPAL ELECTRONICS, INC. AND CONTAINS CONFIDENTIAL AND TRADE SECRET INFORMATION. THIS SHEET MAY NOT BE TRANSFERED FROM THE CUSTODY OF THE COMPETENT DIVISION OF R&D DEPARTMENT EXCEPT AS AUTHORIZED BY COMPAL ELECTRONICS, INC. NEITHER THIS SHEET NOR THE INFORMATION IT CONTAINS MAY BE USED BY OR DISCLOSED TO ANY THIRD PARTY WITHOUT PRIOR WRITTEN CONSENT OF COMPAL ELECTRONICS, INC.

Title: ***PWR-+1.8VSP***

Size: Custom | Document Number: ***LA-6961P*** | Rev: 0.1

Date: Monday, January 24, 2011 | Sheet 51 of 54

http://hobi-elektronika.net

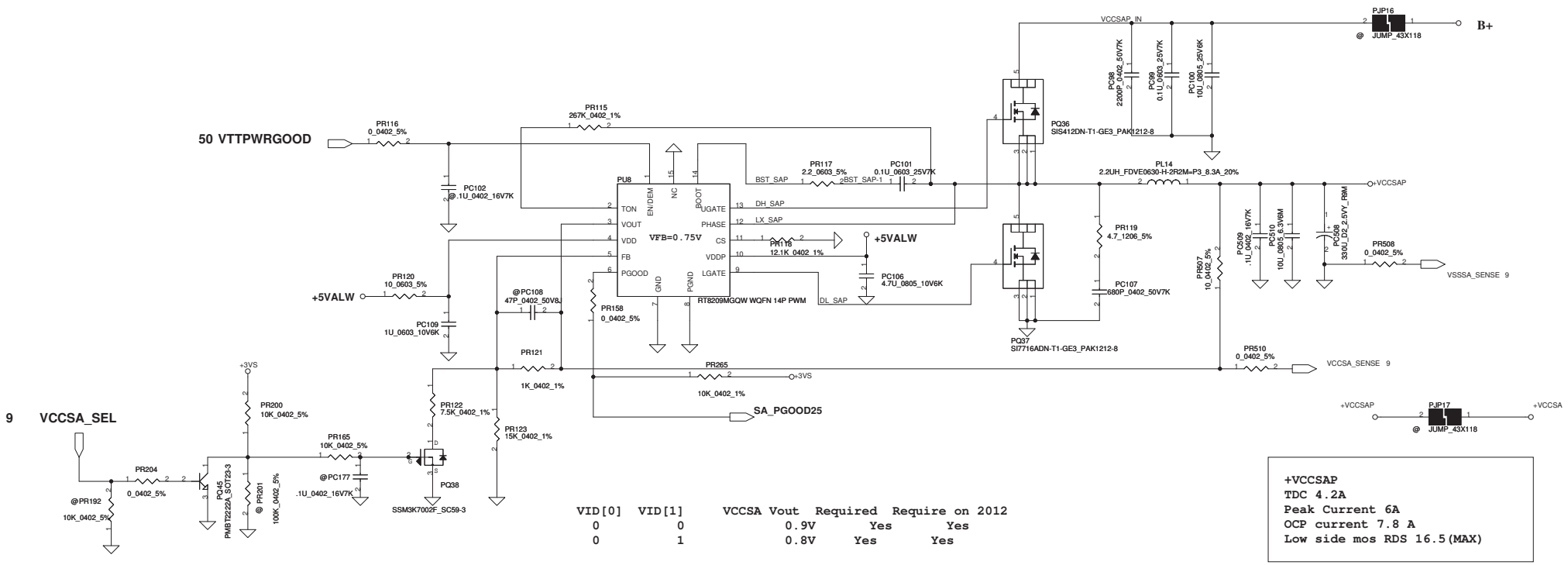

VID[0]	VID[1]	VCCSA Vout	Required	Require on 2012
0	0	0.9V	Yes	Yes
0	1	0.8V	Yes	Yes

+VCCSAP
TDC 4.2A
Peak Current 6A
OCP current 7.8 A
Low side mos RDS 16.5(MAX)

Security Classification	Compal Secret Data		
Issued Date	2009/12/01	Deciphered Date	2010/05/28

THIS SHEET OF ENGINEERING DRAWING IS THE PROPRIETARY PROPERTY OF COMPAL ELECTRONICS, INC. AND CONTAINS CONFIDENTIAL AND TRADE SECRET INFORMATION. THIS SHEET MAY NOT BE TRANSFERED FROM THE CUSTODY OF THE COMPETENT DIVISION OF R&D DEPARTMENT EXCEPT AS AUTHORIZED BY COMPAL ELECTRONICS, INC. NEITHER THIS SHEET NOR THE INFORMATION IT CONTAINS MAY BE USED BY OR DISCLOSED TO ANY THIRD PARTY WITHOUT PRIOR WRITTEN CONSENT OF COMPAL ELECTRONICS, INC.

Compal Electronics, Inc.

Title: PWR-VCCSA_COREP

Size: C | Document Number: LA-6761P | Rev: 0.1

Date: Monday, January 24, 2011 | Sheet 52 of 54

http://hobi-elektronika.net

VGA_COREP
TDC 22A
Peak Current 30.54A
OCP current 36.7A
Low side mos RDS
3.2ohm(max) 2.6ohm(typ)

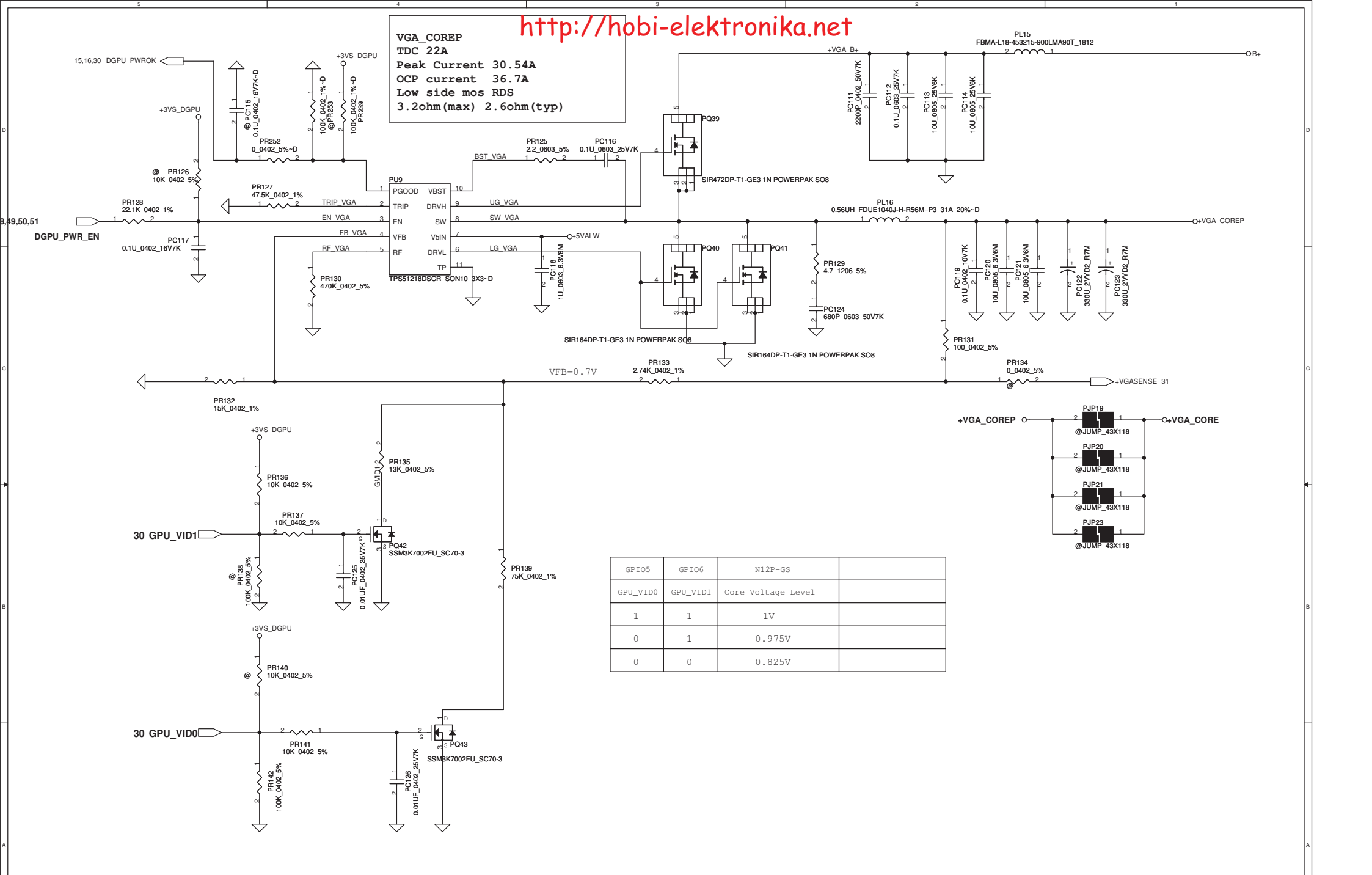

GPIO5	GPIO6	N12P-GS	
GPU_VID0	GPU_VID1	Core Voltage Level	
1	1	1V	
0	1	0.975V	
0	0	0.825V	

Security Classification	Compal Secret Data		
Issued Date	2010/01/13	Deciphered Date	2011/01/13

THIS SHEET OF ENGINEERING DRAWING IS THE PROPRIETARY PROPERTY OF COMPAL ELECTRONICS, INC. AND CONTAINS CONFIDENTIAL AND TRADE SECRET INFORMATION. THIS SHEET MAY NOT BE TRANSFERED FROM THE CUSTODY OF THE COMPETENT DIVISION OF R&D DEPARTMENT EXCEPT AS AUTHORIZED BY COMPAL ELECTRONICS, INC. NEITHER THIS SHEET NOR THE INFORMATION IT CONTAINS MAY BE USED BY OR DISCLOSED TO ANY THIRD PARTY WITHOUT PRIOR WRITTEN CONSENT OF COMPAL ELECTRONICS, INC.

Compal Electronics, Inc.

Title: VGA_CORE

Size | Document Number | Rev 0.0

Date: Tuesday, January 25, 2011 | Sheet 53 of 54

http://hobi-elektronika.net

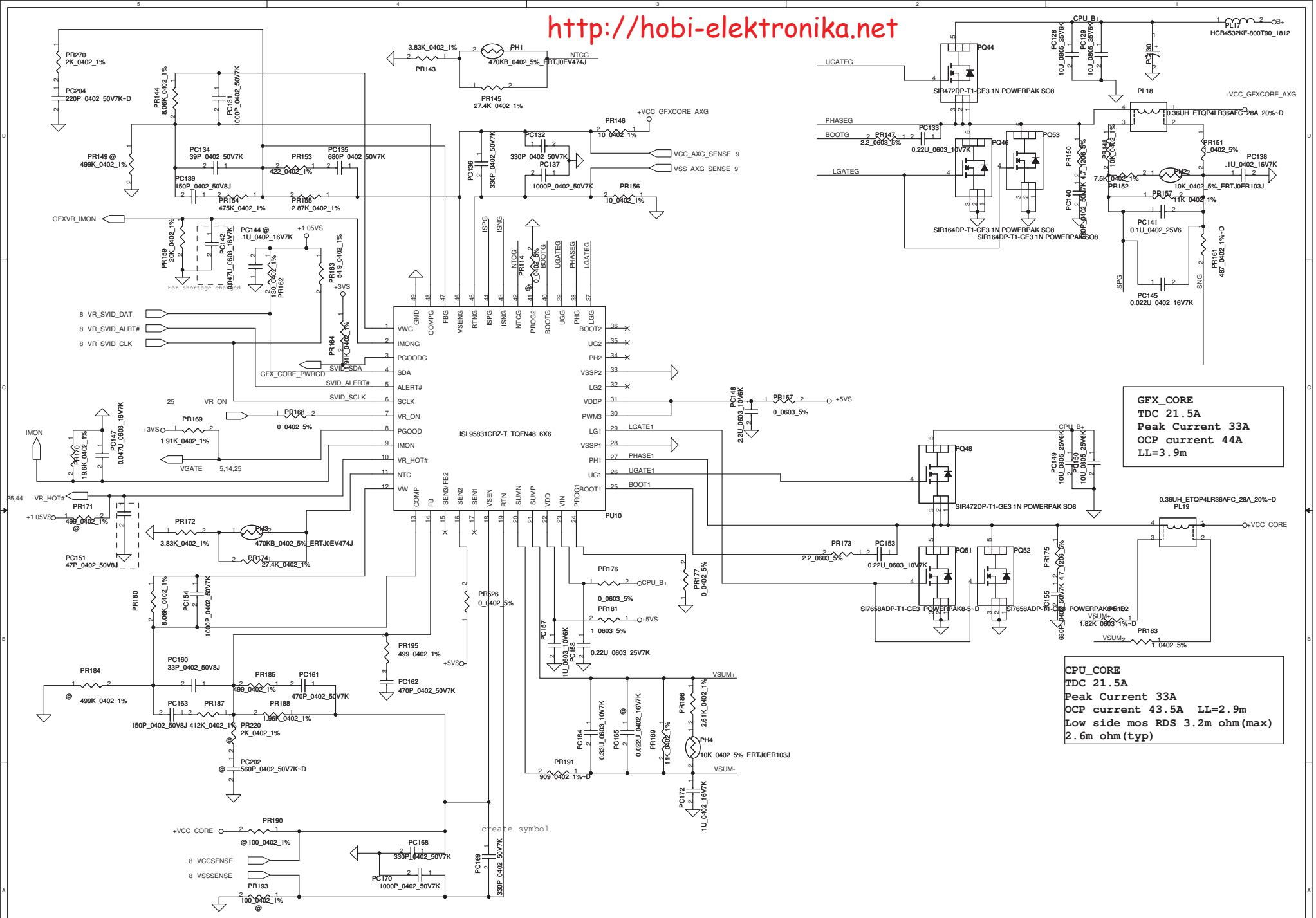

Security Classification	Compal Secret Data		
Issued Date	2010/01/25	Deciphered Date	2010/05/28

THIS SHEET OF ENGINEERING DRAWING IS THE PROPRIETARY PROPERTY OF COMPAL ELECTRONICS, INC. AND CONTAINS CONFIDENTIAL AND TRADE SECRET INFORMATION. THIS SHEET MAY NOT BE TRANSFERED FROM THE CUSTODY OF THE COMPETENT DIVISION OF R&D DEPARTMENT EXCEPT AS AUTHORIZED BY COMPAL ELECTRONICS, INC. NEITHER THIS SHEET NOR THE INFORMATION IT CONTAINS MAY BE USED BY OR DISCLOSED TO ANY THIRD PARTY WITHOUT PRIOR WRITTEN CONSENT OF COMPAL ELECTRONICS, INC.

Compal Electronics, Inc.

Title: PWR +CPU_CORE/+VGFX_CORE

Size: Custom | Document Number: LA-6761P | Rev: 0.1

Date: Monday, January 24, 2011 | Sheet 54 of 54

Version change list (P.I.R. List)

http://hobi-elektronika.net

EE section

Item	Reason for change	PG#	Modify List	Date	Phase
1	SYSON signal Pull low	43	Add R300	2010/10/15	PT
2	Q21 Reverse	25	Change Q21 DS pin	2010/10/15	PT
3	Fan voltage need to stable	26	Add C1923	2010/10/15	PT
4	Timing change	5	Add RC127,RC128,and Change BOM RC6 resrve	2010/10/15	PT
5	Leakge +3vs	13	Change BOM RH95 to resrve	2010/10/15	PT
6	EA crystal fail	25	Change BOM of C287,C288	2010/10/15	PT
7	EA crystal fail	13	Change BOM of CH23,CH24	2010/10/15	PT
8	EA crystal fail	21	Change BOM of CL18,CL19	2010/10/15	PT
9	High pot	21	Change CL39 to SEI20102KIL	2010/10/15	PT
10	DFX request	42	Change JKB1 symbol	2010/10/15	PT
11	ME request	23	Change JBT1 symbol	2010/10/15	PT
12	PCH change version	12	Change BOM UH1 SA00004IV0L	2010/10/15	PT
13	Control LAN LED limiting light	21	Add series connection RL26,RL25,Change BOM RL20 to 0ohm	2010/10/17	PT
14	HuronRiver DG updated for HAD_SYNC pull-down 1M ohm	12	Add RH275 resister connect to HDA_SYNC_R & GND	2010/10/17	PT
15	Control the LCD sequence for AUO requirement	20	Add R2005,R2006 to reserve EN_INVPWR & +LCDVDD solution	2010/10/17	PT
16	Control the LCD sequence for AUO requirement	20	Add R2013,R2014,Q305 to reserve INVPWR_B+ Discharg Circuit	2010/10/20	PT
17	USB3.0 controller change to UPD720200AF1DAPA	24	Add R1962,R1963 to UPD720200AF1DAPA solution	2010/10/20	PT
18	NV request	28	Change R463,R465 pin2 net to +3VS_DGPU	2010/10/22	PT
19	NV request	33	Change BOM of RV109,RV116 to 1Kohm	2010/10/22	PT
20	The double pull low	29	Change BOM R937 to resrve	2010/10/22	PT
21	Modify screw H18 for ME request	39	Change H18 symbol	2010/10/22	PT
22	The EC request	25	Change R1095 to EC_CRY2 net,	2010/10/22	PT
23	The EC request	25	Change BOM R253 to 0ohm,R1095 to 100Kohm,C287,C288, X1 resrve	2010/10/24	PT
24	The EC request	25	Change BOM R225 to 8.2kohm	2010/10/24	PT
25	The EC request	25	Change R222 to D71	2010/10/26	PT
26	Intel request	12~19	Change BOM UH1 SA00004IV1L	2010/12/1	ST
27	Changed from +3vs to +valw to fix issue can't wake from S3 by port of USB3.0	24	Change BOM Del R1963 ,Add R1962	2010/12/1	ST
28	NV request	41	Change BOM RV88 to 4.99K ohm	2010/12/1	ST
29	Maximum derateing changed from 12V to 20V	9	Change BOM QC4 to SB00000HK0L	2010/12/1	ST
30	Maximum derateing changed from 2V to 2.5V	9	Change BOM CC176 to SGA00005H0L	2010/12/1	ST
31	EMI request	20	Add L5 to SM01000DH0L	2010/12/6	ST
32	EMI request	20	Change BOM CU63 to 100PF	2010/12/6	ST
33	EMI request	20	Change BOM C1167 to 22PF	2010/12/6	ST
34	GLAN orange LED too dark	21	Change BOM RL26 to 200ohm	2010/12/6	ST
35	The EC request	25	Add C1947 to SE07I200J8L	2010/12/8	ST
36	The safety request	12	Change DH4 pin1,2,3	2010/12/8	ST
37	The USB3_SMI# signal change to GPIO14	15	Change UH1 pin C23 and H15	2010/12/8	ST
38	The DP Power Dongle	29	Add C110	2010/12/8	ST
39	The ME request	8	Change BOM C110 to C112	2010/12/9	ST
40	For ENE EC protect	20	1/12 add D13, R395		
41					
42					
43					
44					
45					
46					
47					
48					
49					
50					
51					
52					
53					
54					

Security Classification	Compal Secret Data		
Issued Date	2009/07/25	Deciphered Date	2010/07/25

THIS SHEET OF ENGINEERING DRAWING IS THE PROPRIETARY PROPERTY OF COMPAL ELECTRONICS, INC. AND CONTAINS CONFIDENTIAL AND TRADE SECRET INFORMATION. THIS SHEET MAY NOT BE TRANSFERED FROM THE CUSTODY OF THE COMPETENT DIVISION OF R&D DEPARTMENT EXCEPT AS AUTHORIZED BY COMPAL ELECTRONICS, INC. NEITHER THIS SHEET NOR THE INFORMATION IT CONTAINS MAY BE USED BY OR DISCLOSED TO ANY THIRD PARTY WITHOUT PRIOR WRITTEN CONSENT OF COMPAL ELECTRONICS, INC.

Compal Electronics, Inc.

Title: **HW Changed-List History-1**

Size: | Document Number: *LA-6961P* | Rev: 0.3

Date: Monday, January 24, 2011 | Sheet 55 of 55