1. ALL RESISTANCE VALUES ARE IN OHMS, 0.1 WATT +/- 5%.
2. ALL CAPACITANCE VALUES ARE IN MICROFARADS.
3. ALL CRYSTALS & OSCILLATOR VALUES ARE IN HERTZ.

Tue Jul 5 21:36:16 2011

REV	ECN	DESCRIPTION OF REVISION	CK APPD / DATE
12	0001170763	ENGINEERING RELEASED	2011-07-05

N94 POR MLB_V3 DVT FOR BOARD_REV11/REV12

PDF PAGE	CSA PAGE	CONTENTS	SYNC MASTER	DATE
1	1	TABLE OF CONTENTS		
2	2	H4P JTAG, USB, PLL		
3	3	H4P GPIO,UART,SPI,I2S,I2C,SDIO		
4	4	H4P SDRAM POWER		
5	5	H4P SOC, CPU, IO POWER		
6	6	H4P NAND&GND, NAND		
7	7	H4P MIPI,CAMERA SENSOR		
8	8	H4P VIDEO OUT, FLEX CONNECTORS		
9	9	L63 AUDIO CODEC		
10	10	HEAD PHONE		
11	11	ANGELINA PMU(1/2)		
12	12	ANGELINA PMU(2/2)		
13	13	ACCEL,GYRO,COMPASS,SPK AMP		
14	14	DOCK CONNECTOR,SPK AMP		
15	15	NIMBUS,LCD		
16	16	FF&MAIN CAMERA,STROBE		
17	17	RF INTERFACE, SHIELD,STANDOFFS		
18	18	TEST POINTS		

SCH 051-8890
BRD 820-3031
MCO 056-4257

BOM 639-1723(16G,GUC,US)
BOM 639-1724(32G,GUC,US)
BOM 639-1777(64G,GUC,US)

BOM 639-2727(16G,GU,US)
BOM 639-2728(32G,GU,US)
BOM 639-2729(64G,GU,US)

BOM 639-2788(16G,GU,EU)
BOM 639-2789(32G,GU,EU)
BOM 639-2790(64G,GU,EU)

N94 EEEE BOM LABELS

PART#	QTY	DESCRIPTION	REFERENCE DESIGNATOR(S)	CRITICAL	BOM OPTION
825-2029	1	EEEE FOR 639-1723 (16G)	EEEE_DJP1	Y	EEEE_16G_GUC_US
825-2029	1	EEEE FOR 639-1724 (32G)	EEEE_DJP2	Y	EEEE_32G_GUC_US
825-2029	1	EEEE FOR 639-1777 (64G)	EEEE_DK00	Y	EEEE_64G_GUC_US
825-2029	1	EEEE FOR 639-2727 (16G)	EEEE_DQ5M	Y	EEEE_16G_GU_US
825-2029	1	EEEE FOR 639-2728 (32G)	EEEE_DQ5D	Y	EEEE_32G_GU_US
825-2029	1	EEEE FOR 639-2729 (64G)	EEEE_DQ5G	Y	EEEE_64G_GU_US
825-2029	1	EEEE FOR 639-2788 (16G)	EEEE_DR42	Y	EEEE_16G_GU_EU
825-2029	1	EEEE FOR 639-2789 (32G)	EEEE_DR44	Y	EEEE_32G_GU_EU
825-2029	1	EEEE FOR 639-2790 (64G)	EEEE_DR41	Y	EEEE_64G_GU_EU

WIFI/BT MODULE BOM OPTIONS

PART#	QTY	DESCRIPTION	REFERENCE DESIGNATOR(S)	CRITICAL	BOM OPTION
339S0143	1	MURATA WIFI_BT MODULE	U1_RF	Y	WIFI_BT_MODULE

WIFI/BT MODULE ALTERNATE

PART NUMBER	ALTERNATE FOR PART NUMBER	BOM OPTION	REF DES	COMMENTS:
339S0154	339S0143	WIFI_BT_MODULE	U1_RF	USI WIFI_BT MODULE
339S0155	339S0143	WIFI_BT_MODULE	U1_RF	SEMCO WIFI_BT_MODULE

UPPER ANTENNA MATCHING BOM OPTIONS

PART#	QTY	DESCRIPTION	REFERENCE DESIGNATOR(S)	CRITICAL	BOM OPTION
131S0318	1	CAP,CER,COG,1.6PF,+/-0.1PF,25V,	0201, HQ C6_RF	Y	UAT_US
152S0562	1	IND,WW,HF,5.1NH,+/-0.2NH,470MA,	03015 L12_RF	Y	UAT_US
			C66_RF = NOSTUFF		
131S0364	1	CAP,CER,4.7PF,+/-0.1PF,25V,COG,	0201,HQ C86_RF	Y	UAT_US
152S1240	1	IND,WW,HF,4.3NH,+/-0.2NH,530MA,	03015 L14_RF	Y	UAT_US
131S0279	1	CAP,CER,COG,1.3PF,+/-0.1PF,25V,	0201, HQ C6_RF	Y	UAT_EU
152S0562	1	IND,WW,HF,5.1NH,+/-0.2NH,470MA,	03015 L12_RF	Y	UAT_EU
131S0278	1	CAP,CER,CCOG,HF,1PF,+/-0.1PF,25V,	0201,HQ C66_RF	Y	UAT_EU
131S0449	1	CAP,CER,3.6PF,+/-0.1PF,25V,COG,	0201,HQ C86_RF	Y	UAT_EU
152S1240	1	IND,WW,HF,4.3NH,+/-0.2NH,530MA,	03015 L14_RF	Y	UAT_EU

4.3UF CAP ALTERNATE

PART NUMBER	ALTERNATE FOR PART NUMBER	BOM OPTION	REF DES	COMMENTS:
138S0702	138S0657			MURATA 4.3UF CAP
			C53,C54,C77,C116,C166,C314,C612,C613,C615,C701,C702,C756,C757	

INVERTER GATE ALTERNATE

PART NUMBER	ALTERNATE FOR PART NUMBER	BOM OPTION	REF DES	COMMENTS:
311S0549	311S0539		U19_RF	TI INVERTER GATE

AND GATE ALTERNATE

PART NUMBER	ALTERNATE FOR PART NUMBER	BOM OPTION	REF DES	COMMENTS:
311S0548	311S0398		U18_RF,U20_RF	TI 2-INPUT AND GATE

19.2MHZ ALTERNATE

PART NUMBER	ALTERNATE FOR PART NUMBER	BOM OPTION	REF DES	COMMENTS:
197S0402	197S0340		Y1_RF	NDK 19.2MHZ XTAL

N94 SCH & PCB BOM CALLOUT

PART#	QTY	DESCRIPTION	REFERENCE DESIGNATOR(S)	CRITICAL	BOM OPTION
051-8890	1	N94_MLB_V3 SCHEMATIC	SCH	Y	?
820-3031	1	N94_MLB_V3 PCB	PCB	Y	?

NAND BOM OPTIONS

PART#	QTY	DESCRIPTION	REFERENCE DESIGNATOR(S)	CRITICAL	BOM OPTION
335S0781	1	16G,HYNIX 26NM PPN10 TLGA52	U1	Y	NAND_16GB_PPN10
335S0782	1	32G,HYNIX 26NM PPN10 TLGA52	U1	Y	NAND_32GB_PPN10
335S0814	1	64G,HYNIX 26NM PPN10 TLGA52	U1	Y	NAND_64GB_PPN10

PART NUMBER	ALTERNATE FOR PART NUMBER	BOM OPTION	REF DES	COMMENTS:
335S0815	335S0781	NAND_16GB_PPN10	U1	16G,SAMSUNG,27NM PPN10
335S0804	335S0781	NAND_16GB_PPN10	U1	16G,TOSHIBA,24NM PPN10
335S0816	335S0782	NAND_32GB_PPN10	U1	32G,SAMSUNG,27NM PPN10
335S0805	335S0782	NAND_32GB_PPN10	U1	32G,TOSHIBA,24NM PPN10
335S0806	335S0814	NAND_64GB_PPN10	U1	64G,TOSHIBA,24NM PPN10

VIDEO BUFFER ALTERNATE

PART NUMBER	ALTERNATE FOR PART NUMBER	BOM OPTION	REF DES	COMMENTS:
343S0539	343S0520		U9	INTERSIL VIDEO BUFFER

32KHZ XTAL ALTERNATE

PART NUMBER	ALTERNATE FOR PART NUMBER	BOM OPTION	REF DES	COMMENTS:
197S0382	197S0392		Y1	TXC XTAL

STROBE INDUCTOR ALTERNATE

PART NUMBER	ALTERNATE FOR PART NUMBER	BOM OPTION	REF DES	COMMENTS:
152S1173	152S0979		L9	CYNTEC INDUCTOR

CHARGER INDUCTOR ALTERNATE

PART NUMBER	ALTERNATE FOR PART NUMBER	BOM OPTION	REF DES	COMMENTS:
152S1051	152S0927		L28	CYNTEC INDUCTOR

LEVEL TRANSLATOR ALTERNATE

PART NUMBER	ALTERNATE FOR PART NUMBER	BOM OPTION	REF DES	COMMENTS:
311S0562	311S0372		U11	TI LEVEL TRANSLATOR

THERMISTOR ALTERNATE

PART NUMBER	ALTERNATE FOR PART NUMBER	BOM OPTION	REF DES	COMMENTS:
107S0208	107S0150		R21,R22,R34,R35	MURATA THERMISTOR

SYNC MASTER=N/A SYNC DATE=N/A

DRAWING TITLE: N94 MLB_V3

Apple Inc.

DRAWING NUMBER: 051-8890 SIZE: D

REVISION: 12.0.0

BRANCH

PAGE: 1 OF 18

SHEET: 1 OF 33

NOTICE OF PROPRIETARY PROPERTY:
THE INFORMATION CONTAINED HEREIN IS THE PROPRIETARY PROPERTY OF APPLE COMPUTER, INC.
THE POSESSOR AGREES TO THE FOLLOWING:
I TO MAINTAIN THIS DOCUMENT IN CONFIDENCE
II NOT TO REPRODUCE OR COPY IT
III NOT TO REVEAL OR PUBLISH IT IN WHOLE OR PART
IV ALL RIGHTS RESERVED

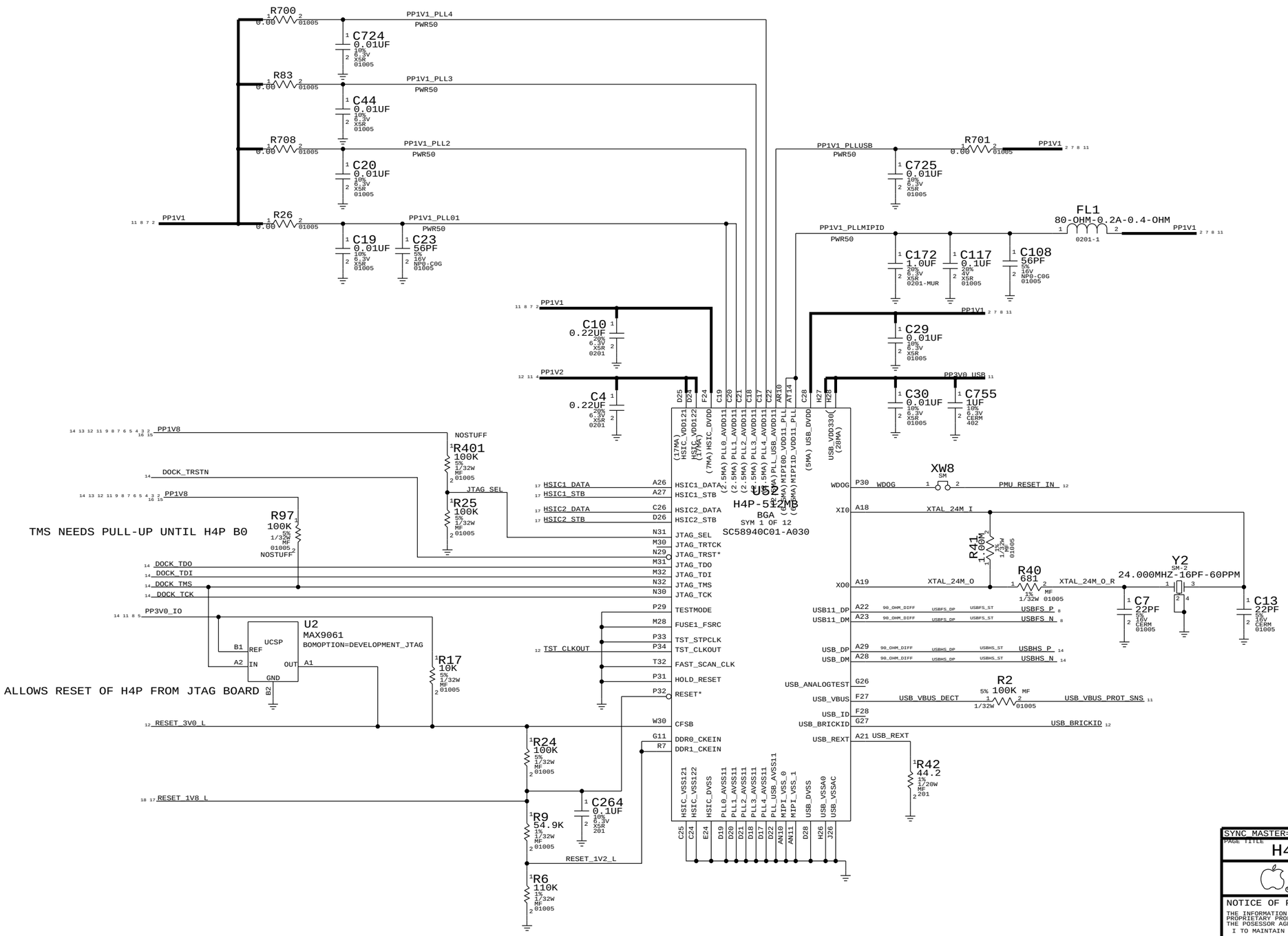

SYNC_MASTER=N/A SYNC_DATE=N/A

PAGE TITLE
H4P JTAG, USB ,PLL

Apple Inc.

DRAWING NUMBER 051-8890 SIZE D

REVISION 12.0.0

BRANCH

PAGE 2 OF 18

SHEET 2 OF 33

NOTICE OF PROPRIETARY PROPERTY:
THE INFORMATION CONTAINED HEREIN IS THE PROPRIETARY PROPERTY OF APPLE COMPUTER, INC.
THE POSESSOR AGREES TO THE FOLLOWING:
I TO MAINTAIN THIS DOCUMENT IN CONFIDENCE
II NOT TO REPRODUCE OR COPY IT
III NOT TO REVEAL OR PUBLISH IT IN WHOLE OR PART
IV ALL RIGHTS RESERVED

BOARD_REV[2:0]={EHCI_PORT_PWR2,EHCI_PORT_PWR1,EHCI_PORT_PWR0}

111	PROTO1
110	PROTO1A
101	PROTO2
100	PROTO3
011	PROTO3A
010	EVT1
1111	EVT1A
1110	EVT2
0001	DVT <---SELECTED
0000	PVT

BOARD_REV3 — R31 10K 01005 NOSTUFF — PP1V8
BOARD_REV2 — R27 10K 01005 NOSTUFF
BOARD_REV1 — R8 10K 01005 NOSTUFF
BOARD_REV0 — R29 10K 01005

BOARD_ID[3:0]={GPIO16,SPIO0_MISO,SPI0_MOSI,SPI0_SCLK}

0000	N9X MLB
0001	N9X DEV
0100	K93 AP
0101	K93 DEV
0110	K94 AP
0111	K94 DEV
1000	N94 AP <---SELECTED
1001	N94 DEV

BOARD_ID3 — R800 10K 01005 — PP1V8 — CODEC XSP & BB I2S

FLOAT=LOW, PULLUP=HIGH

BOOT_CONFIG[3:0]={GPIO29_CONFIG3,GPIO28_CONFIG2,GPIO25_CONFIG1,GPIO18_CONFIG0}

0000	SPI0
0001	SPI3
0010	SPI0 W/TEST
0011	SPI3 W/TEST
0100	FMI0 2CS
0101	FMI0 4CS
0110	FMI0 4CS W/TEST
0111	RESERVED
1000	FMI1 2 CS
1001	FMI1 4 CS
1010	FMI1 4CS W/TEST
1100	FMI0/1 2/2 CS
1101	FMI0/1 4/4 CS <------SELECTED FOR PROTO3
1110	FMI0/1 4/4 CS W/TEST
1111	RESERVED

BOOT_CONFIG3 — R362 10K 01005 — PP1V8
BOOT_CONFIG2 — R103 10K 01005
BOOT_CONFIG1 — R15 10K 01005 NOSTUFF
BOOT_CONFIG0 — R104 10K 01005

200K OR40K PULL UP @EUREKA PMU
RESET_BB_PMU_L — R33 3.9K 5% 1/32W MF 01005 — RESET_BB_PMU_L_R

FOR DESENSE

C324 56PF 5% 16V NP0-C0G 01005
C325 56PF 5% 16V NP0-C0G 01005

R87 2.2K 5% 1/32W MF 01005
R88 2.2K 5% 1/32W MF 01005
R419 2.2K 5% 1/32W MF 01005
R424 2.2K 5% 1/32W MF 01005
R77 2.2K 5% 1/32W MF 01005
R75 2.2K 5% 1/32W MF 01005 — PP1V8

R36 33.2 1% 1/32W MF 01005

U52
H4P-512MB
BGA
SC58940C01-A030
SYM 3 OF 12

Signal	Pin	Net
I2S0_MCLK		I2S0_MCK_R
I2S0_MCK	Y32	
I2S0_BCLK	AB33	I2S0_BCLK
I2S0_LRCLK	Y31	I2S0_LRCLK
I2S0_DIN	AC34	I2S0_DIN
I2S0_DOUT	AA32	I2S0_DOUT
I2S1_MCK	AC33	
I2S1_BCLK	AD32	I2S1_BCLK
I2S1_LRCLK	Y34	I2S1_LRCLK
I2S1_DIN	W34	I2S1_DIN
I2S1_DOUT	AC32	I2S1_DOUT
I2S2_MCK	V33	
I2S2_BCLK	V32	I2S2_BCLK
I2S2_LRCLK	U34	I2S2_LRCLK
I2S2_DIN	U32	I2S2_DIN
I2S2_DOUT	V31	I2S2_DOUT
I2S3_MCK	T31	
I2S3_BCLK	W32	I2S3_BCLK
I2S3_LRCLK	U31	I2S3_LRCLK
I2S3_DIN	T30	I2S3_DIN
I2S3_DOUT	W29	I2S3_DOUT
BOARD_REV3	W31	SPDIF
BOARD_ID2	AE29	SPI0_MISO
BOARD_ID1	AG34	SPI0_MOSI
BOARD_ID0	AE31	SPI0_SCLK
	AE32	SPI0_SSIN
SPI1_MISO	AH32	SPI1_MISO
SPI1_MOSI	AF28	SPI1_MOSI
SPI1_SCLK	AG32	SPI1_SCLK
SPI1_CS_L	AF31	SPI1_SSIN
	AF34	SPI2_MISO
	AG33	SPI2_MOSI
	AE27	SPI2_SCLK
SPI2_MRDY	AE28	SPI2_SSIN
I2C0_SCL	AD26	I2C0_SCL
I2C0_SDA	AD29	I2C0_SDA
I2C1_SCL	AD31	I2C1_SCL
I2C1_SDA	AE30	I2C1_SDA
	AF30	I2C2_SCL
	AF29	I2C2_SDA
	AA30	SWI_DATA
	AB34	DWI_CLK
	AA31	DWI_DI
	Y27	DWI_DO
	AB27	SDIO0_CLK
	AC26	SDIO0_CMD
	AB31	SDIO0_DATA0
	AD30	SDIO0_DATA1
	AB26	SDIO0_DATA2
	AB32	SDIO0_DATA3
	AH31	SPI3_MISO
	AH29	SPI3_MOSI
	AH30	SPI3_SCLK
	AG30	SPI3_SSIN

VSS: A13 A14 A15 A16 A17 A20 A30 A33 A34 A40

I2C0_SCL_1V8 — I2C0_SDA_1V8 — I2C1_SCL_1V8 — I2C1_SDA_1V8 — I2C2_SCL_1V8 — I2C2_SDA_1V8

DWI_AP_CLK — DWI_AP_DI — DWI_AP_DO

PP3 PP4 PP5 (P4MM)

CODEC ASP: I2S0_MCK_R, I2S0_BCLK, I2S0_LRCLK, I2S0_DIN, I2S0_DOUT
BASEBAND: I2S1_BCLK, I2S1_LRCLK, I2S1_DIN, I2S1_DOUT
CODEC VSP & BLUETOOTH: I2S2_BCLK, I2S2_LRCLK, I2S2_DIN, I2S2_DOUT

U52
H4P-512MB
BGA
SC58940C01-A030
SYM 2 OF 12

Signal	Pin	Net
MENU_KEY_BUFF_L	AA3	GPIO0
HOLD_KEY_BUFF_L	AA4	GPIO1
VOL_DWN_L	AA5	GPIO2
VOL_UP_L	AA6	GPIO3
RINGER_A	AA7	GPIO4
SPKAMP_EN	AB3	GPIO5
	AB4	GPIO6
BT_WAKE	AB5	GPIO7
BT_RESET_L	AC7	GPIO8
	AC4	GPIO9
BB_RESET_L	AD7	GPIO10
BB_RESET_DET_L	AC3	GPIO11
IPC_SRDY	AD6	GPIO12
PMU_IRQ_L	AD5	GPIO13
RADIO_ON_L	AD4	GPIO14
	AD3	GPIO15
BOARD_ID3	AE7	GPIO16
BB_HSIC_RDY	AD1	GPIO17
BOOT_CONFIG0	AE1	GPIO18
KEEPACT	AE4	GPIO19
BB_EMERGENCY_DWLD_L	AE3	GPIO20
GRAPE_INT_L	AE2	GPIO21
LCD_RESET_L	AF4	GPIO22
LCD_HIFA	AF3	GPIO23
	AF7	GPIO24
BOOT_CONFIG1	AF2	GPIO25
FORCE_DFU	AG7	GPIO26
DFU_STATUS	AG6	GPIO27
BOOT_CONFIG2	AG5	GPIO28
BOOT_CONFIG3	AG4	GPIO29
CODEC_INT_L	AG3	GPIO30
WLAN_HSIC_RDY	AG1	GPIO31
GYRO_INT2	AH1	GPIO32
GYRO_INT1	AH2	GPIO33
COMPASS_BRD_INT	AH7	GPIO34
	AH3	GPIO35
ACCEL_INT1_L	AH4	GPIO36
ACCEL_INT2_L	AJ5	GPIO37
ALS_INT_L	AJ4	GPIO38
GRAPE_RESET_L	AJ3	GPIO39
VIDEO_AMP_EN_3V0	U30	GPIO_3V0
HPHONE_REF_CTRL	V30	GPIO_3V1
EHCI_PORT_PWR0	AL7	BOARD_REV0
EHCI_PORT_PWR1	AL6	BOARD_REV1
EHCI_PORT_PWR2	AM6	BOARD_REV2
TMR32_PWM0	AC30	GYRO_INT2
TMR32_PWM1	AA27	ACCEL_INT2_L
TMR32_PWM2	AB30	CAM_STROBE_EN
UART0_RXD	R31	UART0_RXD
UART0_TXD	R30	UART0_TXD
UART1_CTSN	AN4	UART1_CTS_L
UART1_RTSN	AM5	UART1_RTS_L
UART1_RXD	AM3	UART1_RXD
UART1_TXD	AM1	UART1_TXD
UART2_CTSN	AP4	PMU_AMUX_AY_CTRL
UART2_RTSN	AM2	PMU_AMUX_BY_CTRL
UART2_RXD	AM4	IPC_GPIO4
UART2_TXD	AN5	HOST_WLAN_HSIC_RDY
UART3_CTSN	AP1	UART3_CTS_L
UART3_RTSN	AR2	UART3_RTS_L
UART3_RXD	AR4	UART3_RXD
UART3_TXD	AP2	UART3_TXD
UART4_CTSN	AU1	
UART4_RTSN	AT3	
UART4_RXD	AT4	
UART4_TXD	AT1	
UART5_RTXD	AR3	BATTERY_SWI
UART6_CTSN	AU2	
UART6_RTSN	AN3	
UART6_RXD	AU3	
UART6_TXD	AP3	HOST_BB_HSIC_RDY

VSS: A1 A2 A3 A6 A7 A8 A9 A10 A11 A12

USED TO BE CODEC_RESET_L(NO NEED)

(OPEN DRAIN@PMU)
PULL UP @EUREKA PMU
RESET_BB_PMU_L_R
BOARD_ID3

FOR GYRO DATA STAMP

DOCK

BB

GPIO

BT — PP15 (P4MM)

GAS GAUGE

GPIO

PP16 (P4MM)

MENU KEY
POWER/HOLD KEY

PP1V8_ALWAYS
PP1V8_SDRAM — R57 698K 1% 1/32W MF 01005
R56 221K 1% 1/32W MF 01005
R45 47.0K 5% 1/32W MF 01005
R94 47.0K 5% 1/32W MF 01005 — PP1V8_SDRAM

U8 74AUP2G07GF SOT891
VCC, GND, 1A, 2A, 1Y, 2Y

MENU_KEY_L — MENU_KEY_BUFF_L
HOLD_KEY_L — HOLD_KEY_BUFF_L

SYNC_MASTER=N/A SYNC_DATE=N/A

PAGE TITLE	H4P GPIO,UART,SPI,I2S,I2C,SDIO
Apple Inc.	DRAWING NUMBER 051-8890 SIZE D
	REVISION 12.0.0
	BRANCH
	PAGE 3 OF 18
	SHEET 3 OF 33

NOTICE OF PROPRIETARY PROPERTY:
THE INFORMATION CONTAINED HEREIN IS THE PROPRIETARY PROPERTY OF APPLE COMPUTER, INC.
THE POSESSOR AGREES TO THE FOLLOWING:
I TO MAINTAIN THIS DOCUMENT IN CONFIDENCE
II NOT TO REPRODUCE OR COPY IT
III NOT TO REVEAL OR PUBLISH IT IN WHOLE OR PART
IV ALL RIGHTS RESERVED

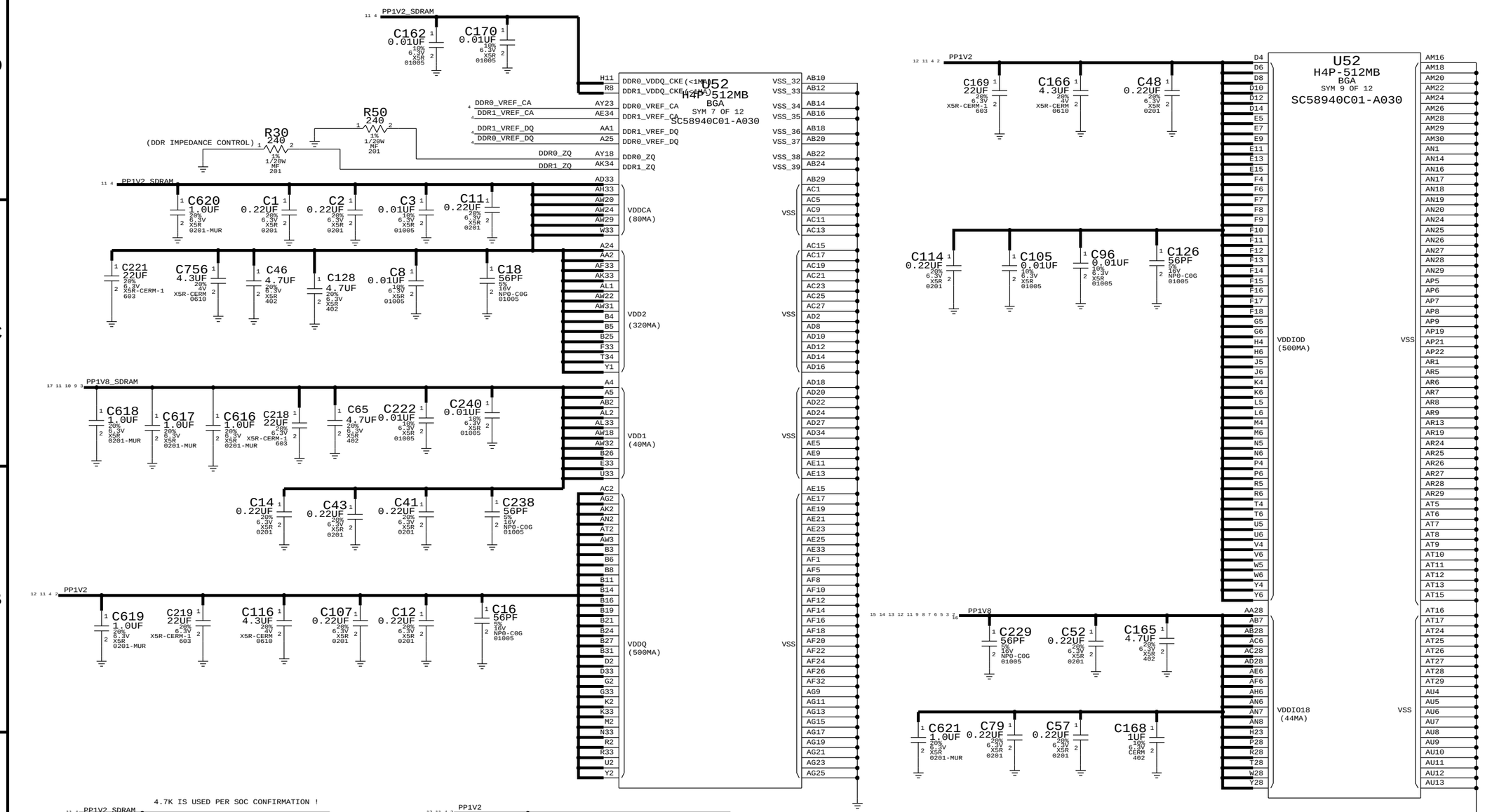

SYNC_MASTER=N/A SYNC_DATE=N/A

PAGE TITLE

H4P SDRAM POWER

Apple Inc.

DRAWING NUMBER 051-8890 SIZE D

REVISION 12.0.0

BRANCH

PAGE 4 OF 18

SHEET 4 OF 33

NOTICE OF PROPRIETARY PROPERTY:
THE INFORMATION CONTAINED HEREIN IS THE PROPRIETARY PROPERTY OF APPLE COMPUTER, INC.
THE POSESSOR AGREES TO THE FOLLOWING:
I TO MAINTAIN THIS DOCUMENT IN CONFIDENCE
II NOT TO REPRODUCE OR COPY IT
III NOT TO REVEAL OR PUBLISH IT IN WHOLE OR PART
IV ALL RIGHTS RESERVED

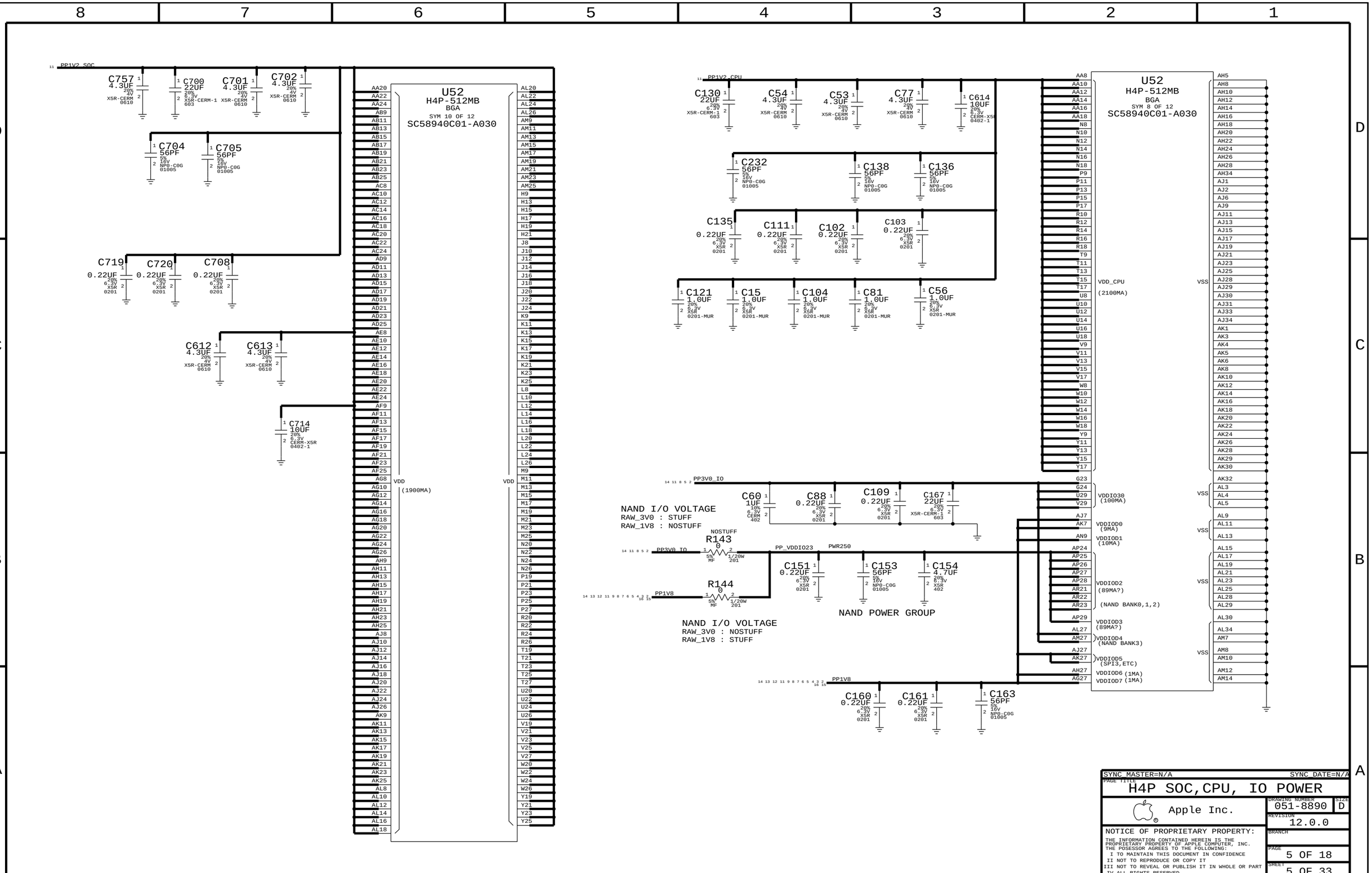

SYNC_MASTER=N/A SYNC_DATE=N/A

PAGE TITLE
H4P SOC,CPU, IO POWER

Apple Inc.

DRAWING NUMBER 051-8890 SIZE D

REVISION 12.0.0

BRANCH

PAGE 5 OF 18

SHEET 5 OF 33

NOTICE OF PROPRIETARY PROPERTY:
THE INFORMATION CONTAINED HEREIN IS THE PROPRIETARY PROPERTY OF APPLE COMPUTER, INC.
THE POSESSOR AGREES TO THE FOLLOWING:
I TO MAINTAIN THIS DOCUMENT IN CONFIDENCE
II NOT TO REPRODUCE OR COPY IT
III NOT TO REVEAL OR PUBLISH IT IN WHOLE OR PART
IV ALL RIGHTS RESERVED

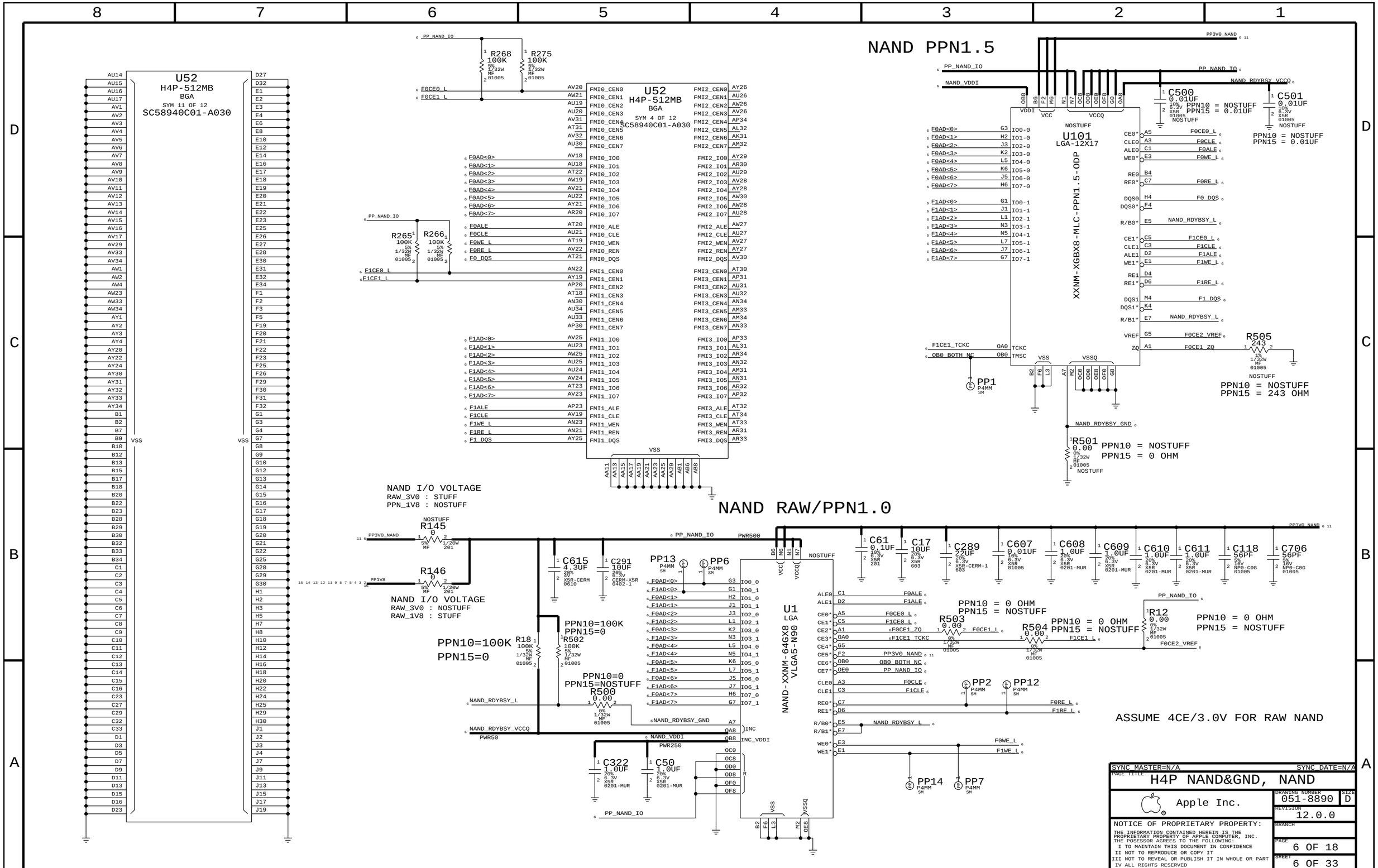
NAND PPN1.5
U52
H4P-512MB
BGA
SYM 11 OF 12
SC58940C01-A030
U52
H4P-512MB
BGA
SYM 4 OF 12
SC58940C01-A030
U101
LGA-12X17
XXNM-XGBX8-MLC-PPN1.5-ODP
PP1
P4MM
SM
R268
100K
R275
100K
R265
100K
R266
100K
C500
0.01UF
PPN10 = NOSTUFF
PPN15 = 0.01UF
C501
0.01UF
PPN10 = NOSTUFF
PPN15 = 0.01UF
R505
243
PPN10 = NOSTUFF
PPN15 = 243 OHM
R501
0.00
PPN10 = NOSTUFF
PPN15 = 0 OHM
NAND I/O VOLTAGE
RAW_3V0 : STUFF
PPN_1V8 : NOSTUFF
NAND RAW/PPN1.0
R145
0
R146
0
NAND I/O VOLTAGE
RAW_3V0 : NOSTUFF
RAW_1V8 : STUFF
PPN10=100K
PPN15=0
R18
100K
R502
100K
PPN10=0
PPN15=NOSTUFF
R500
0.00
C615
4.3UF
C291
10UF
PP13
PP6
U1
LGA
NAND-XXNM-64GX8
VLGA5-N90
C61
0.1UF
C17
10UF
C289
22UF
C607
0.01UF
C608
1.0UF
C609
1.0UF
C610
1.0UF
C611
1.0UF
C118
56PF
C706
56PF
PPN10 = 0 OHM
PPN15 = NOSTUFF
R503
0.00
R504
0.00
R12
0.00
PPN10 = 0 OHM
PPN15 = NOSTUFF
PP2
PP12
PP14
PP7
ASSUME 4CE/3.0V FOR RAW NAND
C322
1.0UF
C50
1.0UF
SYNC MASTER=N/A
SYNC DATE=N/A
PAGE TITLE
H4P NAND&GND, NAND
Apple Inc.
DRAWING NUMBER
051-8890
SIZE
D
REVISION
12.0.0
BRANCH
PAGE
6 OF 18
SHEET
6 OF 33
NOTICE OF PROPRIETARY PROPERTY:
THE INFORMATION CONTAINED HEREIN IS THE PROPRIETARY PROPERTY OF APPLE COMPUTER, INC.
THE POSESSOR AGREES TO THE FOLLOWING:
I TO MAINTAIN THIS DOCUMENT IN CONFIDENCE
II NOT TO REPRODUCE OR COPY IT
III NOT TO REVEAL OR PUBLISH IT IN WHOLE OR PART
IV ALL RIGHTS RESERVED

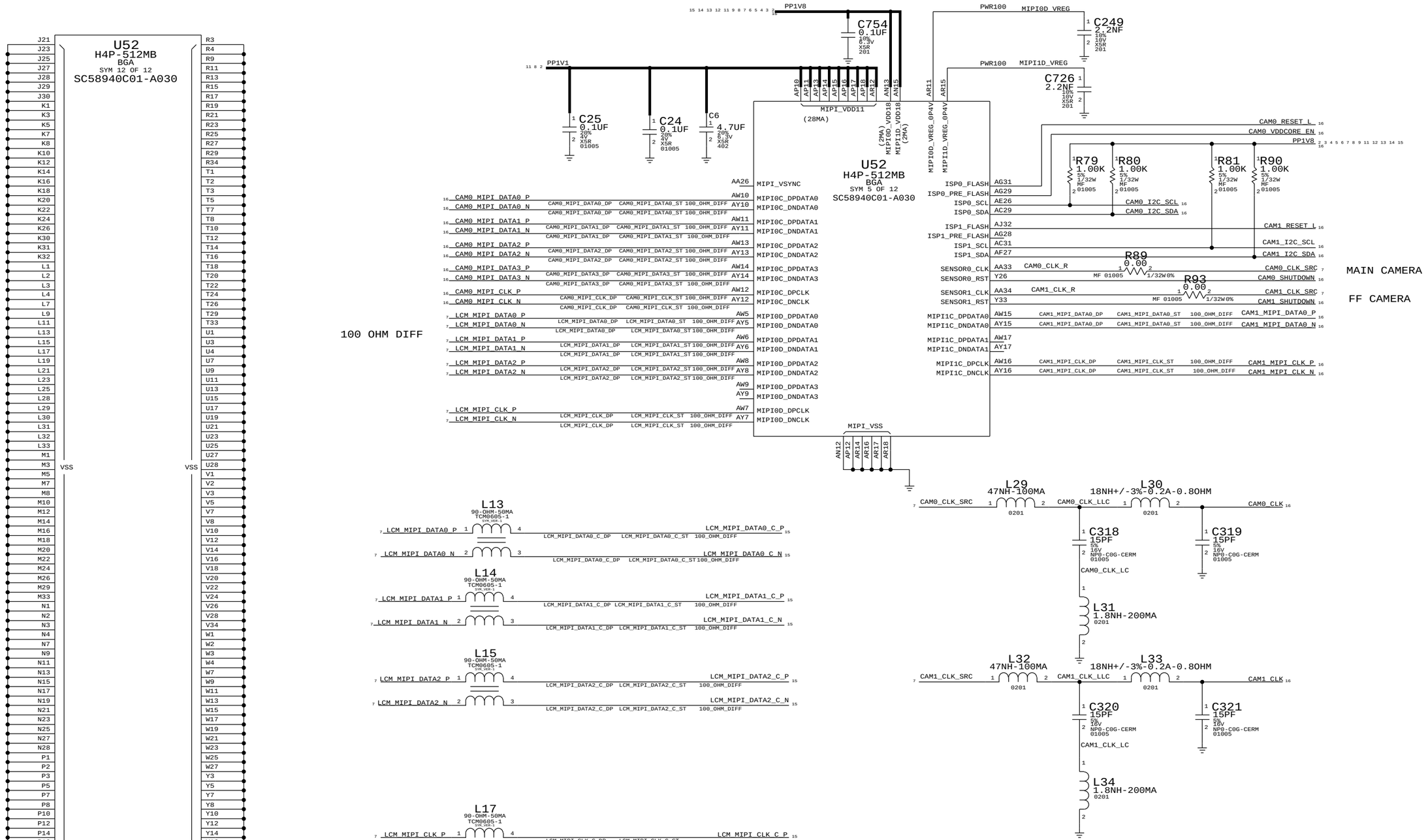

SYNC_MASTER=N/A SYNC_DATE=N/A

PAGE TITLE
H4P MIPI,CAMERA SENSOR

Apple Inc.

DRAWING NUMBER 051-8890 SIZE D

REVISION 12.0.0

BRANCH

PAGE 7 OF 18

SHEET 7 OF 33

NOTICE OF PROPRIETARY PROPERTY:
THE INFORMATION CONTAINED HEREIN IS THE PROPRIETARY PROPERTY OF APPLE COMPUTER, INC.
THE POSESSOR AGREES TO THE FOLLOWING:
I TO MAINTAIN THIS DOCUMENT IN CONFIDENCE
II NOT TO REPRODUCE OR COPY IT
III NOT TO REVEAL OR PUBLISH IT IN WHOLE OR PART
IV ALL RIGHTS RESERVED

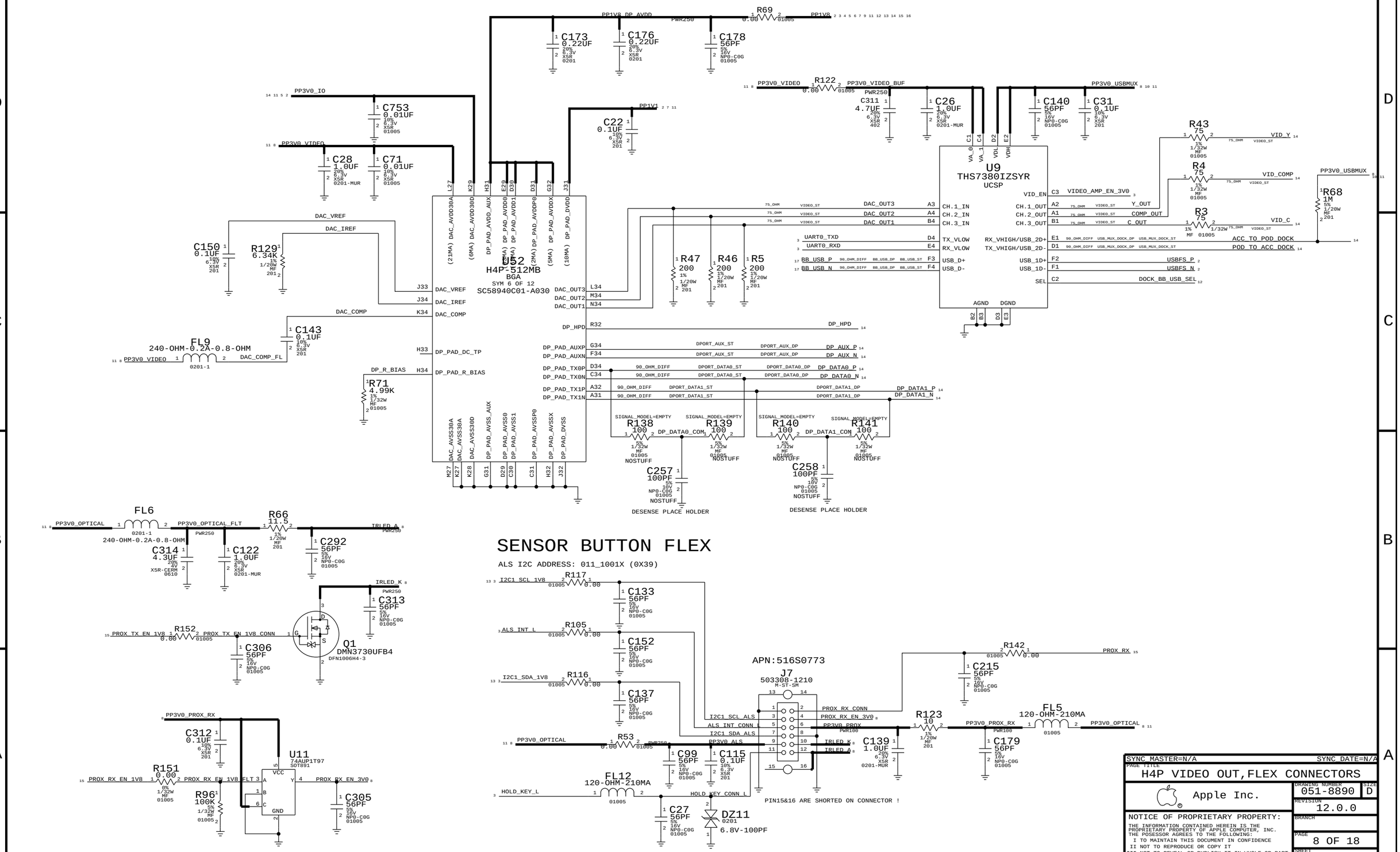

SYNC_MASTER=N/A SYNC_DATE=N/A

PAGE TITLE
H4P VIDEO OUT,FLEX CONNECTORS

Apple Inc.

DRAWING NUMBER 051-8890 SIZE D

REVISION 12.0.0

BRANCH

PAGE 8 OF 18

SHEET 8 OF 33

NOTICE OF PROPRIETARY PROPERTY:
THE INFORMATION CONTAINED HEREIN IS THE PROPRIETARY PROPERTY OF APPLE COMPUTER, INC.
THE POSESSOR AGREES TO THE FOLLOWING:
I TO MAINTAIN THIS DOCUMENT IN CONFIDENCE
II NOT TO REPRODUCE OR COPY IT
III NOT TO REVEAL OR PUBLISH IT IN WHOLE OR PART
IV ALL RIGHTS RESERVED

L63 AUDIO INTERFACE

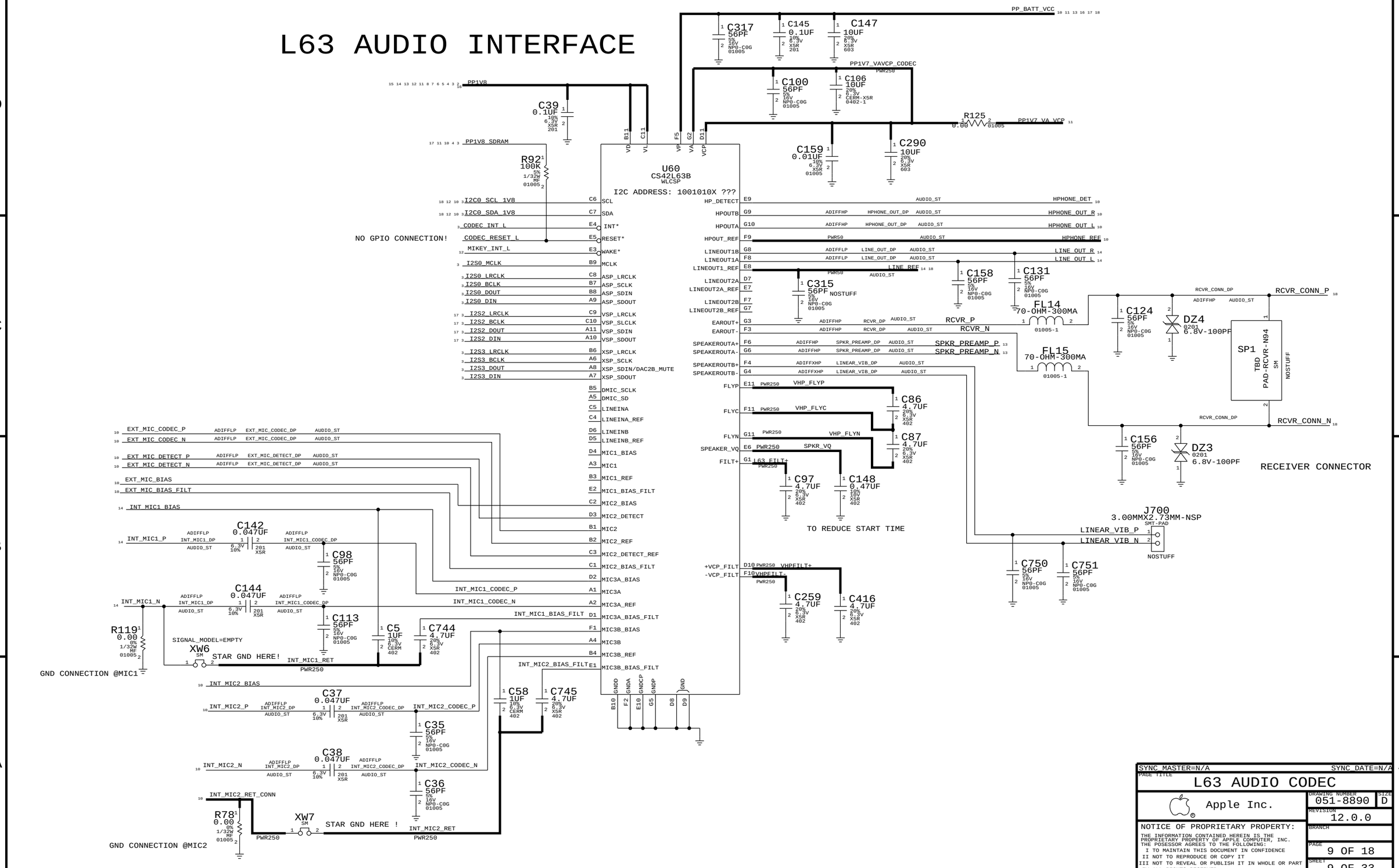

SYNC_MASTER=N/A	SYNC_DATE=N/A
PAGE TITLE	L63 AUDIO CODEC
Apple Inc.	DRAWING NUMBER 051-8890 · SIZE D
	REVISION 12.0.0
	BRANCH
	PAGE 9 OF 18
	SHEET 9 OF 33

NOTICE OF PROPRIETARY PROPERTY:
THE INFORMATION CONTAINED HEREIN IS THE PROPRIETARY PROPERTY OF APPLE COMPUTER, INC.
THE POSESSOR AGREES TO THE FOLLOWING:
I TO MAINTAIN THIS DOCUMENT IN CONFIDENCE
II NOT TO REPRODUCE OR COPY IT
III NOT TO REVEAL OR PUBLISH IT IN WHOLE OR PART
IV ALL RIGHTS RESERVED

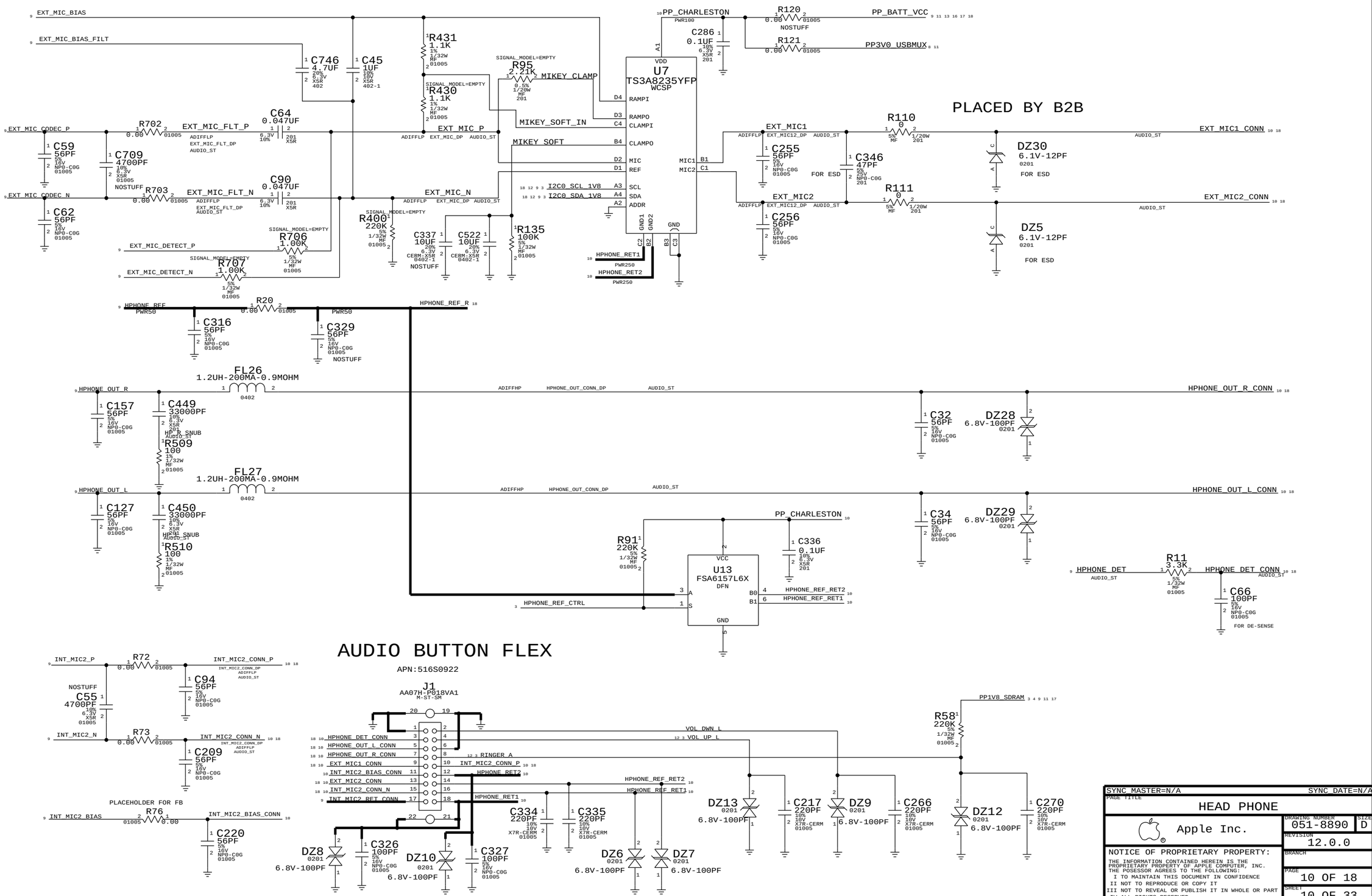

SYNC_MASTER=N/A	SYNC_DATE=N/A
PAGE TITLE	HEAD PHONE
Apple Inc.	DRAWING NUMBER 051-8890 SIZE D
	REVISION 12.0.0
	BRANCH
	PAGE 10 OF 18
	SHEET 10 OF 33

NOTICE OF PROPRIETARY PROPERTY:
THE INFORMATION CONTAINED HEREIN IS THE PROPRIETARY PROPERTY OF APPLE COMPUTER, INC.
THE POSESSOR AGREES TO THE FOLLOWING:
I TO MAINTAIN THIS DOCUMENT IN CONFIDENCE
II NOT TO REPRODUCE OR COPY IT
III NOT TO REVEAL OR PUBLISH IT IN WHOLE OR PART
IV ALL RIGHTS RESERVED

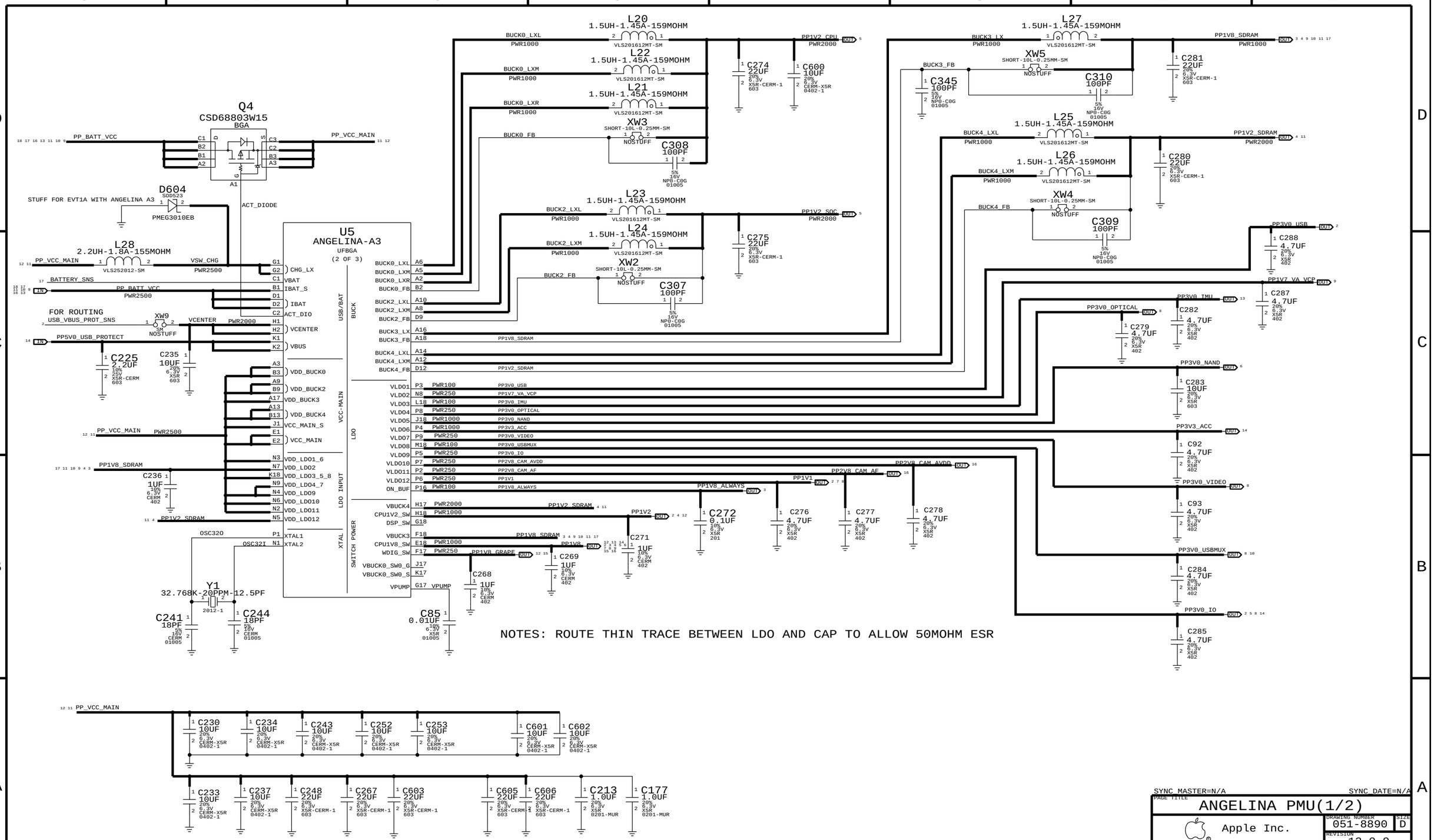

SYNC_MASTER=N/A SYNC_DATE=N/A

PAGE TITLE
ANGELINA PMU(1/2)

Apple Inc.

DRAWING NUMBER 051-8890 SIZE D

REVISION 12.0.0

BRANCH

PAGE 11 OF 18

SHEET 11 OF 33

NOTICE OF PROPRIETARY PROPERTY:
THE INFORMATION CONTAINED HEREIN IS THE PROPRIETARY PROPERTY OF APPLE COMPUTER, INC.
THE POSESSOR AGREES TO THE FOLLOWING:
I TO MAINTAIN THIS DOCUMENT IN CONFIDENCE
II NOT TO REPRODUCE OR COPY IT
III NOT TO REVEAL OR PUBLISH IT IN WHOLE OR PART
IV ALL RIGHTS RESERVED

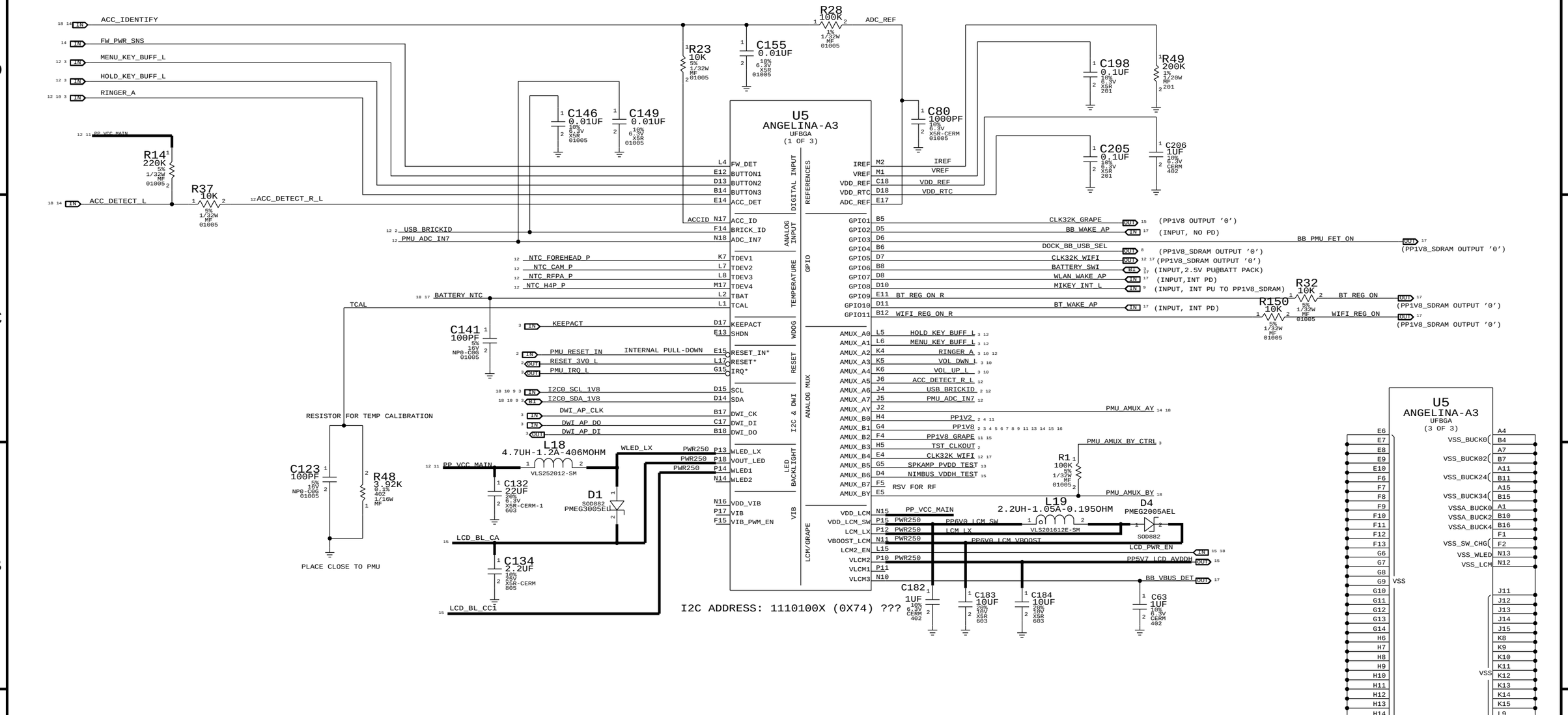

SYNC MASTER=N/A SYNC DATE=N/A

PAGE TITLE
ANGELINA PMU(2/2)

Apple Inc.

DRAWING NUMBER 051-8890 SIZE D

REVISION 12.0.0

BRANCH

PAGE 12 OF 18

SHEET 12 OF 33

NOTICE OF PROPRIETARY PROPERTY:
THE INFORMATION CONTAINED HEREIN IS THE PROPRIETARY PROPERTY OF APPLE COMPUTER, INC.
THE POSESSOR AGREES TO THE FOLLOWING:
I TO MAINTAIN THIS DOCUMENT IN CONFIDENCE
II NOT TO REPRODUCE OR COPY IT
III NOT TO REVEAL OR PUBLISH IT IN WHOLE OR PART
IV ALL RIGHTS RESERVED

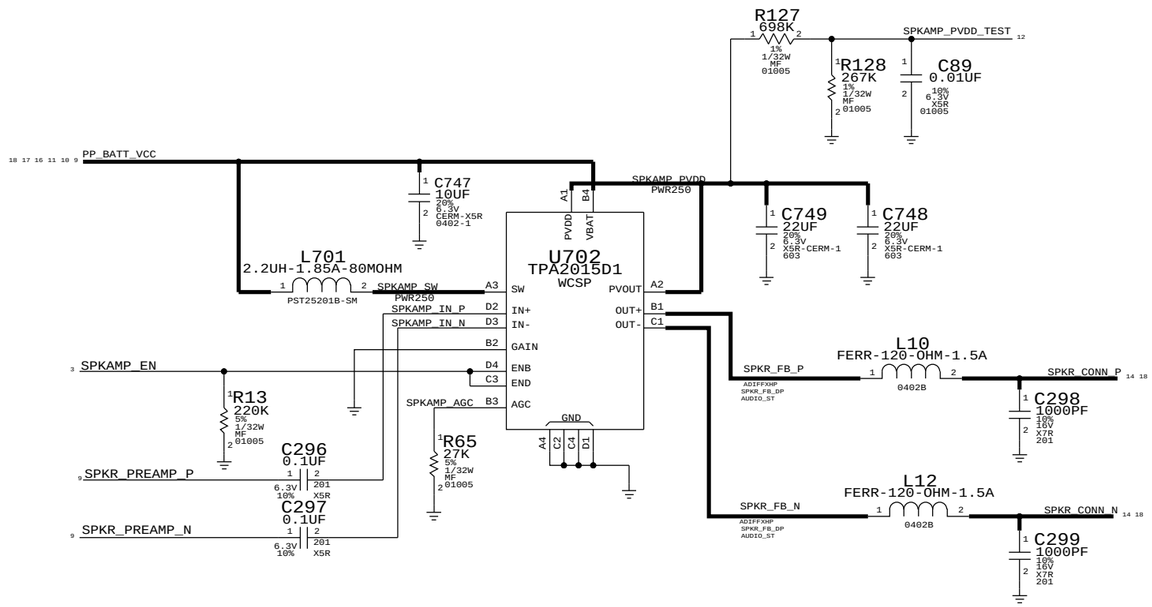

COMPASS OPTION1

I2C ADDR: 0001100X (0X0D)

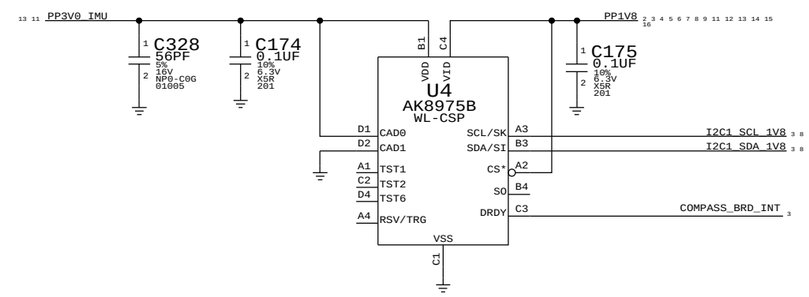

ACCELEROMETER

I2C ADDRESS: 0011101X (0X1D)

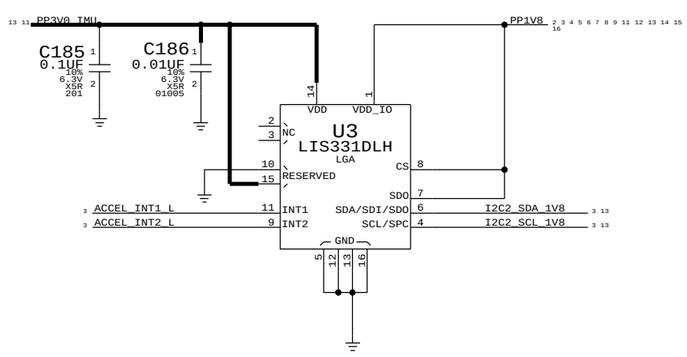

GYRO 8KHZ

I2C ADDRESS: 0XD0

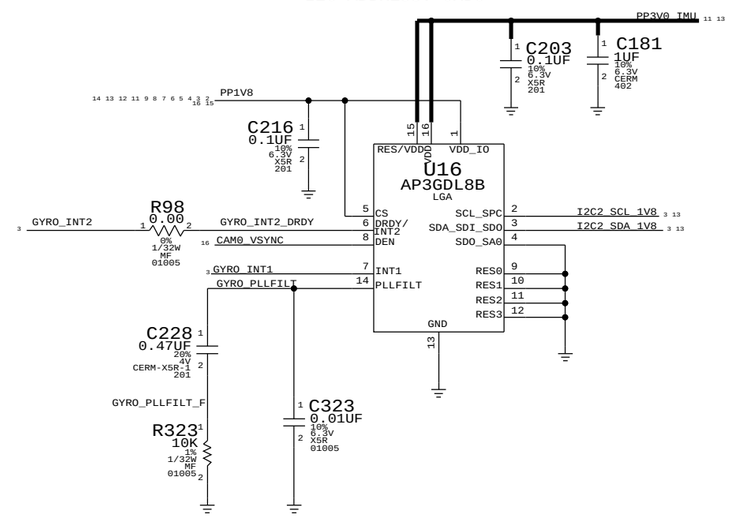

SYNC MASTER=N/A SYNC DATE=N/A

PAGE TITLE
ACCEL,GYRO,COMPASS,SPK AMP

Apple Inc.

DRAWING NUMBER 051-8890 SIZE D

REVISION 12.0.0

BRANCH

PAGE 13 OF 18

SHEET 13 OF 33

NOTICE OF PROPRIETARY PROPERTY:
THE INFORMATION CONTAINED HEREIN IS THE PROPRIETARY PROPERTY OF APPLE COMPUTER, INC.
THE POSESSOR AGREES TO THE FOLLOWING:
I TO MAINTAIN THIS DOCUMENT IN CONFIDENCE
II NOT TO REPRODUCE OR COPY IT
III NOT TO REVEAL OR PUBLISH IT IN WHOLE OR PART
IV ALL RIGHTS RESERVED

DOCK CONNECTOR

J3
AA03-P042VA2
M-ST-SM

DP_AUX_N
DP_AUX_P
DP_AUX_CONN_N
DP_AUX_CONN_P
DP_DATA0_CONN_P
DP_DATA0_CONN_N
DP_DATA1_CONN_N
DP_DATA1_CONN_P
POD_TO_ACC_DOCK_CONN
ACC_TO_POD_DOCK_CONN
USB_DM_DOCK
USB_DP_DOCK
LINE_OUT_R_CONN
LINE_OUT_L_CONN
MENU_KEY_CONN_L
ACC_DETECT_L
PP3V3_ACC_CONN
ACC_IDENTIFY
SPKR_CONN_P
SPKR_CONN_N
DOCK_TCK_CONN
DOCK_TMS_CONN
DOCK_COMP
DOCK_Y
DOCK_C
LINE_RET_SENSE_CONN

8V-30V FW DETECTION

DOCK_FW_PWR
R516 47.0K 5% 1/32W MF 01005
DZ31 GDZT2R5.1B GDZ-0201
C338 56PF 5% 16V NP0-C0G 01005
FW_PWR_SNS
PP1V8
PP3V0_IO
U6 74AUP2G07GF SOT891 VCC GND
R54 220K 5% 1/32W MF 01005
DP_HPD
PMU_AMUX_AY_CTRL
PMU_AMUX_AY

DZ1 0201 8V-100PF NOSTUFF
C72 56PF 5% 16V NP0-C0G 01005
C73 56PF 5% 16V NP0-C0G 01005
DZ2 0201 8V-100PF NOSTUFF

R82 100K 5% MF 1/32W 01005
C188 0.1UF 10% 6.3V X5R 201
C189 0.1UF 10% 6.3V X5R 201
R84 100K 5% MF 1/32W 01005
D2 SM-201 RB521ZS-30
D3 SM-201 RB521ZS-30
L2 90-OHM-50MA TCM0605-1
C190 0.1UF 10% 6.3V X5R 201
C191 0.1UF 10% 6.3V X5R 201
L5 12-OHM-100MA-8.5GHZ TCM0806-4SM
C201 0.1UF 10% 6.3V X5R 201
C202 0.1UF 10% 6.3V X5R 201
L6 12-OHM-100MA-8.5GHZ TCM0806-4SM
R112 0.00 1/32W 0% MF 01005
R115 0.00 0% 1/32W MF 01005
L1 90-OHM-50MA TCM0605-1
R214 49.9 1% 1/20W MF 201
ANOTHER 49.9 OHM ON DOCK FLEX
R207 49.9 1% 1/20W MF 201
C207 27PF 5% 16V NP0-C0G 01005
C214 27PF 5% 16V NP0-C0G 01005
R10 0.00 0% 1/32W MF 01005
C74 56PF 5% 16V NP0-C0G 01005
R38 0.00 0% 1/32W MF 01005
C223 4700PF 10% 6.3V X5R 01005 NOSTUFF
C242 56PF 5% 16V NP0-C0G 01005
R39 0.00 0% 1/32W MF 01005
C224 56PF 5% 16V NP0-C0G 01005
PLACEHOLDER FOR FB

FL16 240-OHM-0.2A-0.8-OHM 0201-1
PP5V0_USB_NO_PROTECT_CONN PWR1000
PWR1000
C195 56PF 5% 16V NP0-C0G 01005
C196 56PF 5% 16V NP0-C0G 01005
C227 27PF 5% 25V NP0-C0G 201

FL10 240-OHM-0.2A-0.8-OHM 0201-1
FL11 240-OHM-0.2A-0.8-OHM 0201-1
FL19 FERR-120-OHM-1.5A 0402B
C262 56PF 5% 16V NP0-C0G 01005
C263 56PF 5% 16V NP0-C0G 01005

USB REVERSE VOLTAGE PROTECITON

PP5V0_USB_NO_PROTECT
L3 FERR-120-OHM-1.5A 0402B
L4 FERR-120-OHM-1.5A 0402B
Q3 CSD68803W15 BGA
PP5V0_USB_PROTECT PWR1000
VBUS_PROT_G
R113 220K 5% 1/32W MF 01005
C67 100PF 5% 16V NP0-C0G 01005 USB_POWR_SNUB1
C226 100PF 5% 16V NP0-C0G 01005
C83 100PF 5% 16V NP0-C0G 01005 USB_POWR_SNUB2
C84 100PF 5% 16V NP0-C0G 01005

FL22 80-OHM-0.2A-0.4-OHM 0201-1 VID_COMP
FL23 80-OHM-0.2A-0.4-OHM 0201-1 VID_Y
FL24 80-OHM-0.2A-0.4-OHM 0201-1 VID_C
FL25 240-OHM-0.2A-0.8-OHM 0201-1 LINE_REF
C260 12PF 5% 16V CERM 01005
C261 56PF 5% 16V NP0-C0G 01005 NOSTUFF
R99 0.00 0% 1/32W MF 01005 NOSTUFF DOCK_TRSTN
R85 0.00 0% 1/32W MF 01005 NOSTUFF DOCK_TDI
R86 0.00 0% 1/32W MF 01005 NOSTUFF DOCK_TDO

SYNC_MASTER=N/A SYNC_DATE=N/A
PAGE TITLE
DOCKCONNECTOR,SPK AMP

Apple Inc.

DRAWING NUMBER 051-8890 SIZE D
REVISION 12.0.0
BRANCH
PAGE 14 OF 18
SHEET 14 OF 33

NOTICE OF PROPRIETARY PROPERTY:
THE INFORMATION CONTAINED HEREIN IS THE PROPRIETARY PROPERTY OF APPLE COMPUTER, INC.
THE POSESSOR AGREES TO THE FOLLOWING:
I TO MAINTAIN THIS DOCUMENT IN CONFIDENCE
II NOT TO REPRODUCE OR COPY IT
III NOT TO REVEAL OR PUBLISH IT IN WHOLE OR PART
IV ALL RIGHTS RESERVED

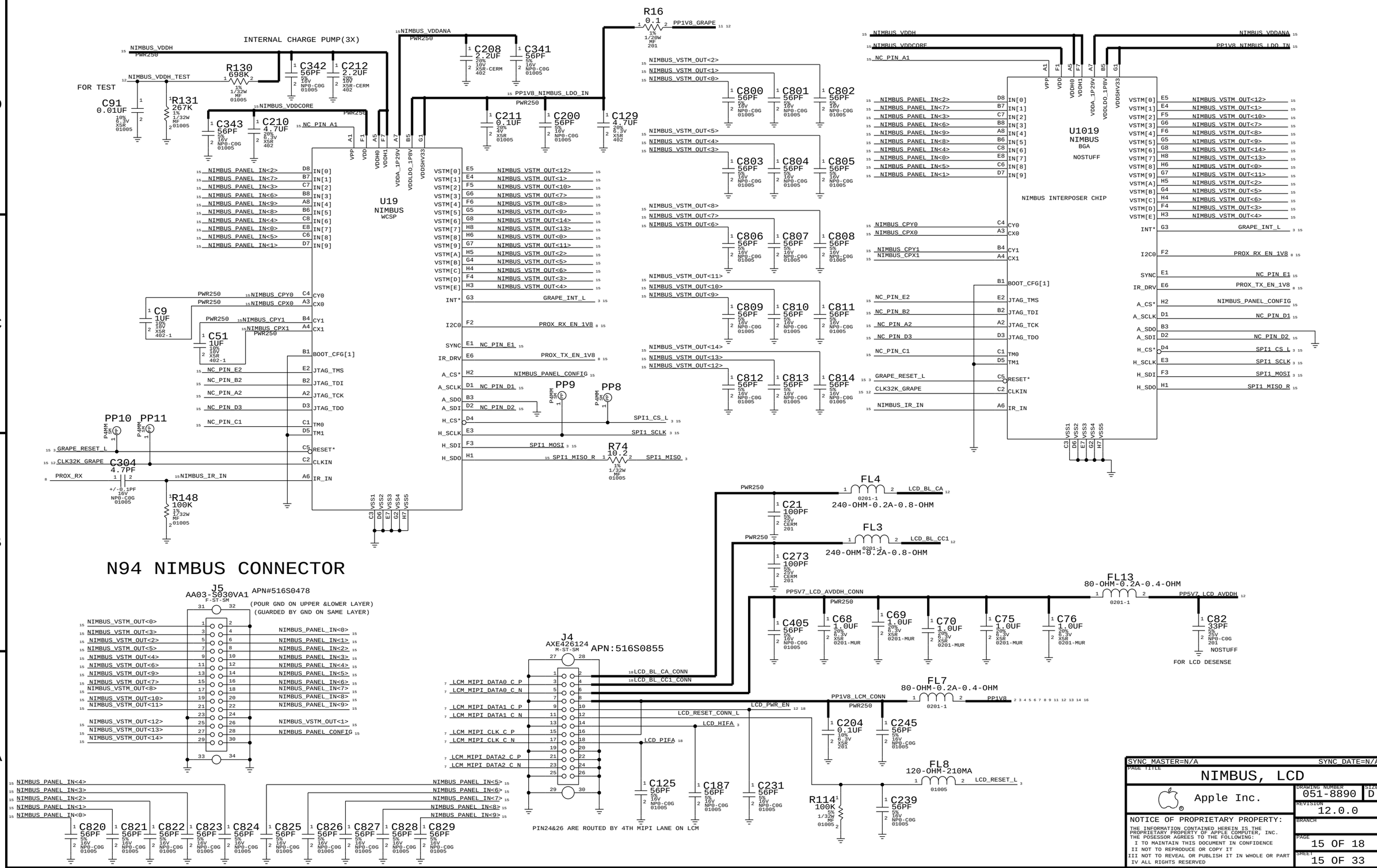
INTERNAL CHARGE PUMP(3X)
FOR TEST
U19
NIMBUS
WCSP
U1019
NIMBUS
BGA
NOSTUFF
NIMBUS INTERPOSER CHIP
N94 NIMBUS CONNECTOR
J5
AA03-S030VA1
APN#516S0478
(POUR GND ON UPPER &LOWER LAYER)
(GUARDED BY GND ON SAME LAYER)
J4
AXE426124
APN:516S0855
PIN24&26 ARE ROUTED BY 4TH MIPI LANE ON LCM
FOR LCD DESENSE
SYNC MASTER=N/A
SYNC DATE=N/A
PAGE TITLE
NIMBUS, LCD
Apple Inc.
DRAWING NUMBER
051-8890
SIZE
D
REVISION
12.0.0
BRANCH
PAGE
15 OF 18
SHEET
15 OF 33
NOTICE OF PROPRIETARY PROPERTY:
THE INFORMATION CONTAINED HEREIN IS THE PROPRIETARY PROPERTY OF APPLE COMPUTER, INC.
THE POSESSOR AGREES TO THE FOLLOWING:
I TO MAINTAIN THIS DOCUMENT IN CONFIDENCE
II NOT TO REPRODUCE OR COPY IT
III NOT TO REVEAL OR PUBLISH IT IN WHOLE OR PART
IV ALL RIGHTS RESERVED

CAM0: MAIN CAMERA CONNECTOR

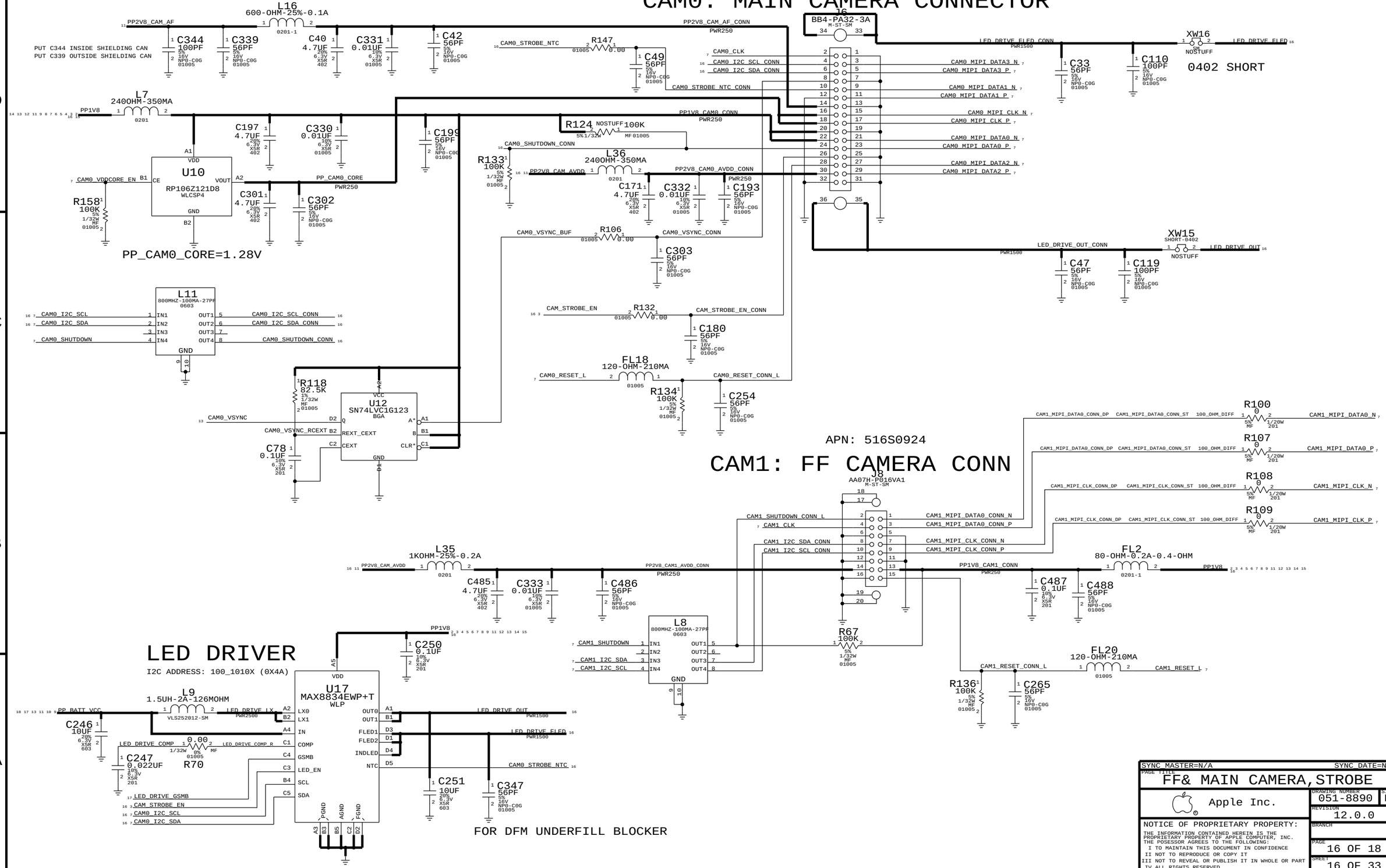

SYNC_MASTER=N/A SYNC_DATE=N/A

PAGE TITLE
FF& MAIN CAMERA,STROBE

Apple Inc.

DRAWING NUMBER 051-8890 SIZE D

REVISION 12.0.0

BRANCH

PAGE 16 OF 18

SHEET 16 OF 33

NOTICE OF PROPRIETARY PROPERTY:

THE INFORMATION CONTAINED HEREIN IS THE PROPRIETARY PROPERTY OF APPLE COMPUTER, INC.
THE POSESSOR AGREES TO THE FOLLOWING:
I TO MAINTAIN THIS DOCUMENT IN CONFIDENCE
II NOT TO REPRODUCE OR COPY IT
III NOT TO REVEAL OR PUBLISH IT IN WHOLE OR PART
IV ALL RIGHTS RESERVED

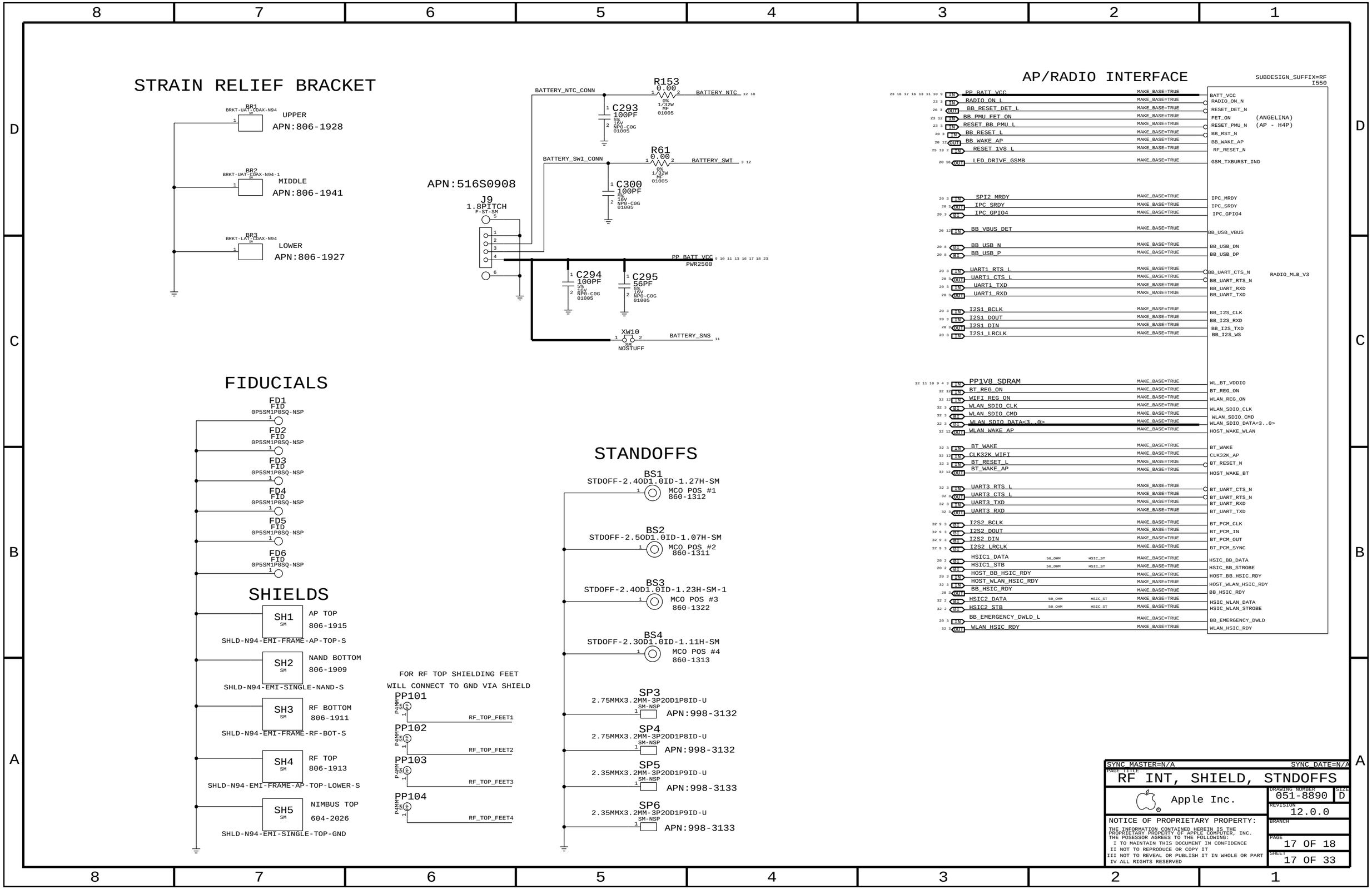
STRAIN RELIEF BRACKET
BR1
BRKT-UAT-COAX-N94
UPPER
APN:806-1928
BR2
BRKT-UAT-COAX-N94-1
MIDDLE
APN:806-1941
BR3
BRKT-LAT-COAX-N94
LOWER
APN:806-1927
APN:516S0908
J9
1.8PITCH
F-ST-SM
BATTERY_NTC_CONN
R153
0.00
0%
1/32W
MF
01005
BATTERY_NTC
C293
100PF
5%
16V
NP0-C0G
01005
BATTERY_SWI_CONN
R61
0.00
0%
1/32W
MF
01005
BATTERY_SWI
C300
100PF
5%
16V
NP0-C0G
01005
PP_BATT_VCC
PWR2500
C294
100PF
5%
16V
NP0-C0G
01005
C295
56PF
5%
16V
NP0-C0G
01005
XW10
SM
NOSTUFF
BATTERY_SNS
FIDUCIALS
FD1
FID
0P5SM1P0SQ-NSP
FD2
FID
0P5SM1P0SQ-NSP
FD3
FID
0P5SM1P0SQ-NSP
FD4
FID
0P5SM1P0SQ-NSP
FD5
FID
0P5SM1P0SQ-NSP
FD6
FID
0P5SM1P0SQ-NSP
SHIELDS
SH1
SM
AP TOP
806-1915
SHLD-N94-EMI-FRAME-AP-TOP-S
SH2
SM
NAND BOTTOM
806-1909
SHLD-N94-EMI-SINGLE-NAND-S
SH3
SM
RF BOTTOM
806-1911
SHLD-N94-EMI-FRAME-RF-BOT-S
SH4
SM
RF TOP
806-1913
SHLD-N94-EMI-FRAME-AP-TOP-LOWER-S
SH5
SM
NIMBUS TOP
604-2026
SHLD-N94-EMI-SINGLE-TOP-GND
FOR RF TOP SHIELDING FEET
WILL CONNECT TO GND VIA SHIELD
PP101
P4MM
RF_TOP_FEET1
PP102
P4MM
RF_TOP_FEET2
PP103
P4MM
RF_TOP_FEET3
PP104
P4MM
RF_TOP_FEET4
STANDOFFS
BS1
STDOFF-2.40D1.0ID-1.27H-SM
MCO POS #1
860-1312
BS2
STDOFF-2.50D1.0ID-1.07H-SM
MCO POS #2
860-1311
BS3
STDOFF-2.40D1.0ID-1.23H-SM-1
MCO POS #3
860-1322
BS4
STDOFF-2.30D1.0ID-1.11H-SM
MCO POS #4
860-1313
SP3
2.75MMX3.2MM-3P20D1P8ID-U
SM-NSP
APN:998-3132
SP4
2.75MMX3.2MM-3P20D1P8ID-U
SM-NSP
APN:998-3132
SP5
2.35MMX3.2MM-3P20D1P9ID-U
SM-NSP
APN:998-3133
SP6
2.35MMX3.2MM-3P20D1P9ID-U
SM-NSP
APN:998-3133
AP/RADIO INTERFACE
SUBDESIGN_SUFFIX=RF
I550
PP_BATT_VCC — BATT_VCC
RADIO_ON_L — RADIO_ON_N
BB_RESET_DET_L — RESET_DET_N
BB_PMU_FET_ON — FET_ON (ANGELINA)
RESET_BB_PMU_L — RESET_PMU_N (AP - H4P)
BB_RESET_L — BB_RST_N
BB_WAKE_AP — BB_WAKE_AP
RESET_1V8_L — RF_RESET_N
LED_DRIVE_GSMB — GSM_TXBURST_IND
SPI2_MRDY — IPC_MRDY
IPC_SRDY — IPC_SRDY
IPC_GPIO4 — IPC_GPIO4
BB_VBUS_DET — BB_USB_VBUS
BB_USB_N — BB_USB_DN
BB_USB_P — BB_USB_DP
UART1_RTS_L — BB_UART_CTS_N
UART1_CTS_L — BB_UART_RTS_N
UART1_TXD — BB_UART_RXD
UART1_RXD — BB_UART_TXD
I2S1_BCLK — BB_I2S_CLK
I2S1_DOUT — BB_I2S_RXD
I2S1_DIN — BB_I2S_TXD
I2S1_LRCLK — BB_I2S_WS
RADIO_MLB_V3
PP1V8_SDRAM — WL_BT_VDDIO
BT_REG_ON — BT_REG_ON
WIFI_REG_ON — WLAN_REG_ON
WLAN_SDIO_CLK — WLAN_SDIO_CLK
WLAN_SDIO_CMD — WLAN_SDIO_CMD
WLAN_SDIO_DATA<3..0> — WLAN_SDIO_DATA<3..0>
WLAN_WAKE_AP — HOST_WAKE_WLAN
BT_WAKE — BT_WAKE
CLK32K_WIFI — CLK32K_AP
BT_RESET_L — BT_RESET_N
BT_WAKE_AP — HOST_WAKE_BT
UART3_RTS_L — BT_UART_CTS_N
UART3_CTS_L — BT_UART_RTS_N
UART3_TXD — BT_UART_RXD
UART3_RXD — BT_UART_TXD
I2S2_BCLK — BT_PCM_CLK
I2S2_DOUT — BT_PCM_IN
I2S2_DIN — BT_PCM_OUT
I2S2_LRCLK — BT_PCM_SYNC
HSIC1_DATA — HSIC_BB_DATA
HSIC1_STB — HSIC_BB_STROBE
HOST_BB_HSIC_RDY — HOST_BB_HSIC_RDY
HOST_WLAN_HSIC_RDY — HOST_WLAN_HSIC_RDY
BB_HSIC_RDY — BB_HSIC_RDY
HSIC2_DATA — HSIC_WLAN_DATA
HSIC2_STB — HSIC_WLAN_STROBE
BB_EMERGENCY_DWLD_L — BB_EMERGENCY_DWLD
WLAN_HSIC_RDY — WLAN_HSIC_RDY
MAKE_BASE=TRUE
50_OHM
HSIC_ST
SYNC_MASTER=N/A
SYNC_DATE=N/A
PAGE TITLE
RF INT, SHIELD, STNDOFFS
Apple Inc.
DRAWING NUMBER
051-8890
SIZE
D
REVISION
12.0.0
BRANCH
PAGE
17 OF 18
SHEET
17 OF 33
NOTICE OF PROPRIETARY PROPERTY:
THE INFORMATION CONTAINED HEREIN IS THE PROPRIETARY PROPERTY OF APPLE COMPUTER, INC.
THE POSESSOR AGREES TO THE FOLLOWING:
I TO MAINTAIN THIS DOCUMENT IN CONFIDENCE
II NOT TO REPRODUCE OR COPY IT
III NOT TO REVEAL OR PUBLISH IT IN WHOLE OR PART
IV ALL RIGHTS RESERVED

POWER

PP5V0_USB_NO_PROTECT	TP1	NOSTUFF	VBUS
	TP2	NOSTUFF	POWER GND
PP_BATT_VCC	TP3	NOSTUFF	VBAT
	TP4	NOSTUFF	POWER GND
	TP5	NOSTUFF	VBAT SENSE
	TP6	NOSTUFF	GND SENSE
BATTERY_NTC	TP18	NOSTUFF	BATTERY NTC

UART

POD_TO_ACC_DOCK_CONN	TP7	NOSTUFF
ACC_TO_POD_DOCK_CONN	TP8	NOSTUFF

USB

USB_DP_DOCK	TP9	NOSTUFF
USB_DM_DOCK	TP10	NOSTUFF

DFU

FORCE_DFU	TP12	NOSTUFF

RESET

RESET_1V8_L	TP13	NOSTUFF

SUPER TP

PMU_AMUX_AY	TP14	NOSTUFF
PMU_AMUX_BY	TP15	NOSTUFF

I2C0 BUS

I2C0_SCL_1V8	TP16	NOSTUFF
I2C0_SDA_1V8	TP17	NOSTUFF

TP19 NOSTUFF SIGNAL GND

GRAPE/LCM

LCD_BL_CC1_CONN	TP21	NOSTUFF
LCD_BL_CA_CONN	TP22	NOSTUFF
LCD_PWR_EN	TP23	NOSTUFF
LCD_PIFA	TP24	NOSTUFF

TP20 NOSTUFF SIGNAL GND

ACCESSORY

ACC_IDENTIFY	TP11	NOSTUFF
ACC_DETECT_L	TP25	NOSTUFF

AUDIO

SPEAKER

SPKR_CONN_P	TP30	NOSTUFF
SPKR_CONN_N	TP31	NOSTUFF

RECEIVER

RCVR_CONN_P	TP32	NOSTUFF
RCVR_CONN_N	TP33	NOSTUFF

MIC

INT_MIC1_CONN_P	TP34	NOSTUFF
INT_MIC1_CONN_N	TP35	NOSTUFF
INT_MIC2_CONN_P	TP36	NOSTUFF
INT_MIC2_CONN_N	TP37	NOSTUFF

LINE OUT

LINE_OUT_L_CONN	TP38	NOSTUFF
LINE_OUT_R_CONN	TP39	NOSTUFF
LINE_REF	TP40	NOSTUFF

HEADPHONE

EXT_MIC1_CONN	TP41	NOSTUFF
EXT_MIC2_CONN	TP42	NOSTUFF
HPHONE_OUT_R_CONN	TP43	NOSTUFF
HPHONE_OUT_L_CONN	TP44	NOSTUFF
HPHONE_DET_CONN	TP45	NOSTUFF
HPHONE_REF_R	TP26	NOSTUFF

TP46 NOSTUFF AUDIO GND

SYNC_MASTER=N/A SYNC_DATE=N/A

PAGE TITLE
TEST POINTS

Apple Inc.

DRAWING NUMBER 051-8890 SIZE D
REVISION 12.0.0
BRANCH
PAGE 18 OF 18
SHEET 18 OF 33

NOTICE OF PROPRIETARY PROPERTY:
THE INFORMATION CONTAINED HEREIN IS THE PROPRIETARY PROPERTY OF APPLE COMPUTER, INC.
THE POSESSOR AGREES TO THE FOLLOWING:
I TO MAINTAIN THIS DOCUMENT IN CONFIDENCE
II NOT TO REPRODUCE OR COPY IT
III NOT TO REVEAL OR PUBLISH IT IN WHOLE OR PART
IV ALL RIGHTS RESERVED

1. ALL RESISTANCE VALUES ARE IN OHMS, 0.1 WATT +/- 5%.
2. ALL CAPACITANCE VALUES ARE IN MICROFARADS.
3. ALL CRYSTALS & OSCILLATOR VALUES ARE IN HERTZ.

CONFIDENTIAL AND PROPRIETARY APPLE SYSTEM DESIGN. FOR REFERENCE PURPOSE ONLY - NOT A CHANGE REQUEST

REV	ECN	DESCRIPTION OF REVISION	CK APPD / DATE
12	0001170763	ENGINEERING RELEASED	2011-07-05

N94 RADIO_MLB_V3 SUBDESIGN

RADIO - 07/05/2011:SUBDESIGN

PAGE	CONTENTS
02	BASEBAND
03	BASEBAND MEMORY
04	BASEBAND POWER
05	POWER1: CONTROL
06	POWER2: DIGITAL, ANALOG, RF
07	AP INTERFACE AND DEBUG CONNECTOR
08	RF TRANSCEIVER - RX AND TX
09	RF TRANSCEIVER - POWER DECOUPLING
10	RF TRANSCEIVER AND ASM
11	MMPA AND PA DC/DC CONVERTER
12	B2 AND B5 PADS
13	DIVERSITY AND EXTERNAL GPS LNA
14	WLAN/BT/FM
15	DIVERSITY ANTENNA SWITCH AND SIM

SCH #: 951-1604 BASED ON RADIO_MLB_EVT2_RFPE

DRAWING TITLE: N94 RADIO_MLB_V3 SUBDESIGN

Apple Inc.

DRAWING NUMBER: 051-8890 SIZE: D

REVISION: 12.0.0

BRANCH:

PAGE: 1 OF 15

SHEET: 19 OF 33

NOTICE OF PROPRIETARY PROPERTY:
THE INFORMATION CONTAINED HEREIN IS THE PROPRIETARY PROPERTY OF APPLE COMPUTER, INC.
THE POSESSOR AGREES TO THE FOLLOWING:
I TO MAINTAIN THIS DOCUMENT IN CONFIDENCE
II NOT TO REPRODUCE OR COPY IT
III NOT TO REVEAL OR PUBLISH IT IN WHOLE OR PART
IV ALL RIGHTS RESERVED

BASEBAND

CONFIDENTIAL AND PROPRIETARY APPLE SYSTEM DESIGN. FOR REFERENCE PURPOSE ONLY - NOT A CHANGE REQUEST

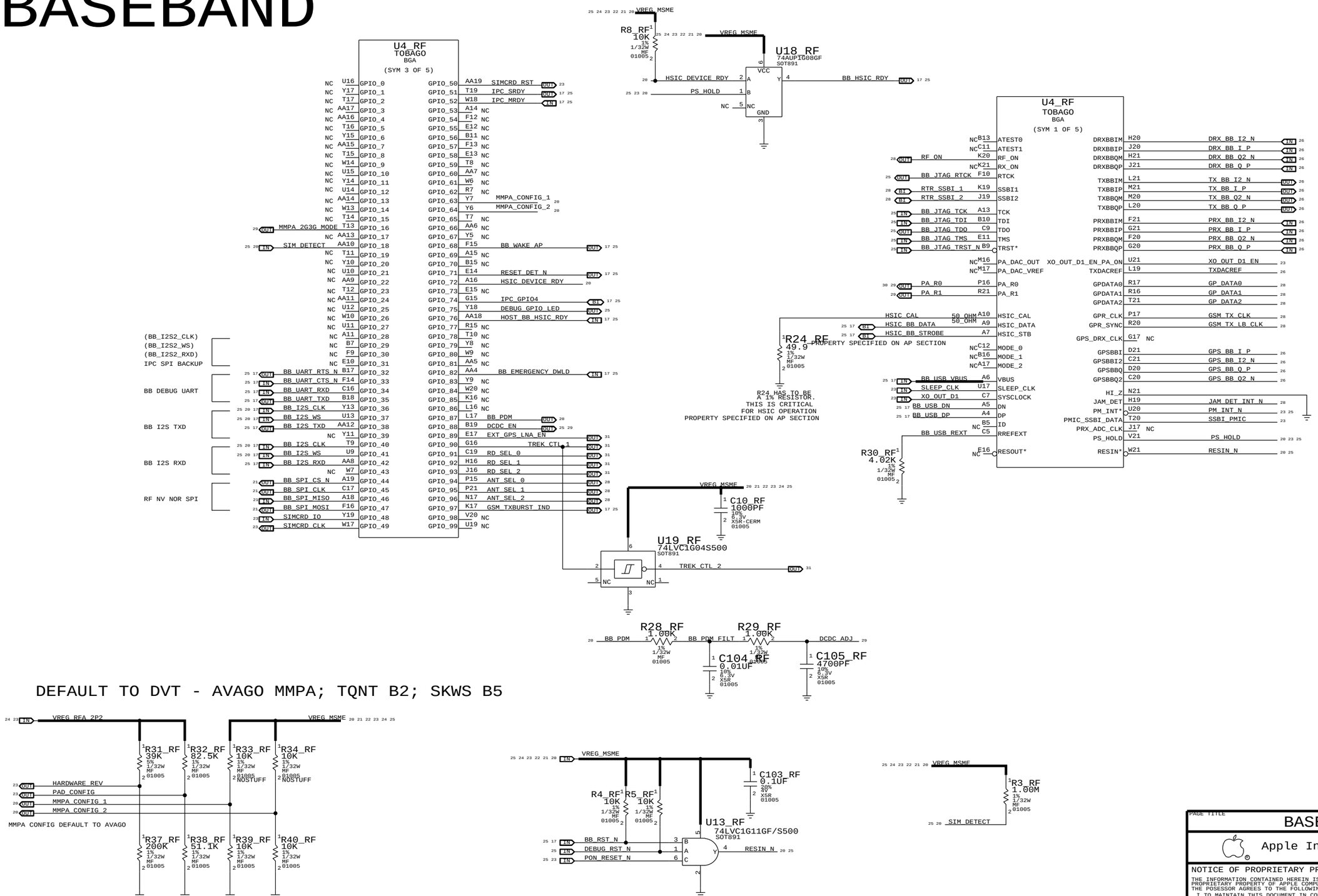

DEFAULT TO DVT - AVAGO MMPA; TQNT B2; SKWS B5

PAGE TITLE	BASEBAND
Apple Inc.	DRAWING NUMBER 051-8890 SIZE D
	REVISION 12.0.0
NOTICE OF PROPRIETARY PROPERTY: THE INFORMATION CONTAINED HEREIN IS THE PROPRIETARY PROPERTY OF APPLE COMPUTER, INC. THE POSESSOR AGREES TO THE FOLLOWING: I TO MAINTAIN THIS DOCUMENT IN CONFIDENCE II NOT TO REPRODUCE OR COPY IT III NOT TO REVEAL OR PUBLISH IT IN WHOLE OR PART IV ALL RIGHTS RESERVED	BRANCH
	PAGE 2 OF 15
	SHEET 20 OF 33

CONFIDENTIAL AND PROPRIETARY APPLE SYSTEM DESIGN. FOR REFERENCE PURPOSE ONLY - NOT A CHANGE REQUEST

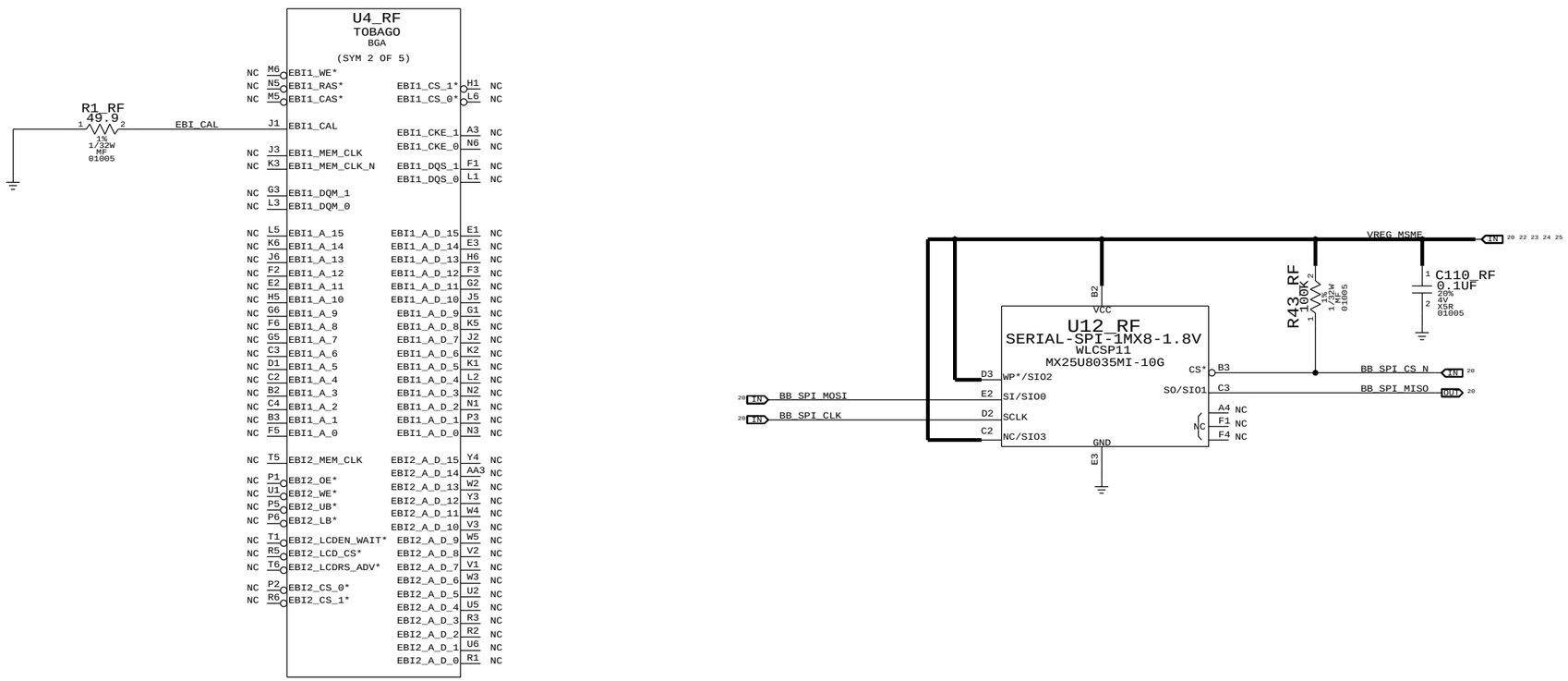

PAGE TITLE	BASEBAND MEMORY
Apple Inc.	DRAWING NUMBER 051-8890 SIZE D
	REVISION 12.0.0
	BRANCH
	PAGE 3 OF 15
	SHEET 21 OF 33

NOTICE OF PROPRIETARY PROPERTY:
THE INFORMATION CONTAINED HEREIN IS THE PROPRIETARY PROPERTY OF APPLE COMPUTER, INC.
THE POSESSOR AGREES TO THE FOLLOWING:
I TO MAINTAIN THIS DOCUMENT IN CONFIDENCE
II NOT TO REPRODUCE OR COPY IT
III NOT TO REVEAL OR PUBLISH IT IN WHOLE OR PART
IV ALL RIGHTS RESERVED

CONFIDENTIAL AND PROPRIETARY APPLE SYSTEM DESIGN. FOR REFERENCE PURPOSE ONLY - NOT A CHANGE REQUEST

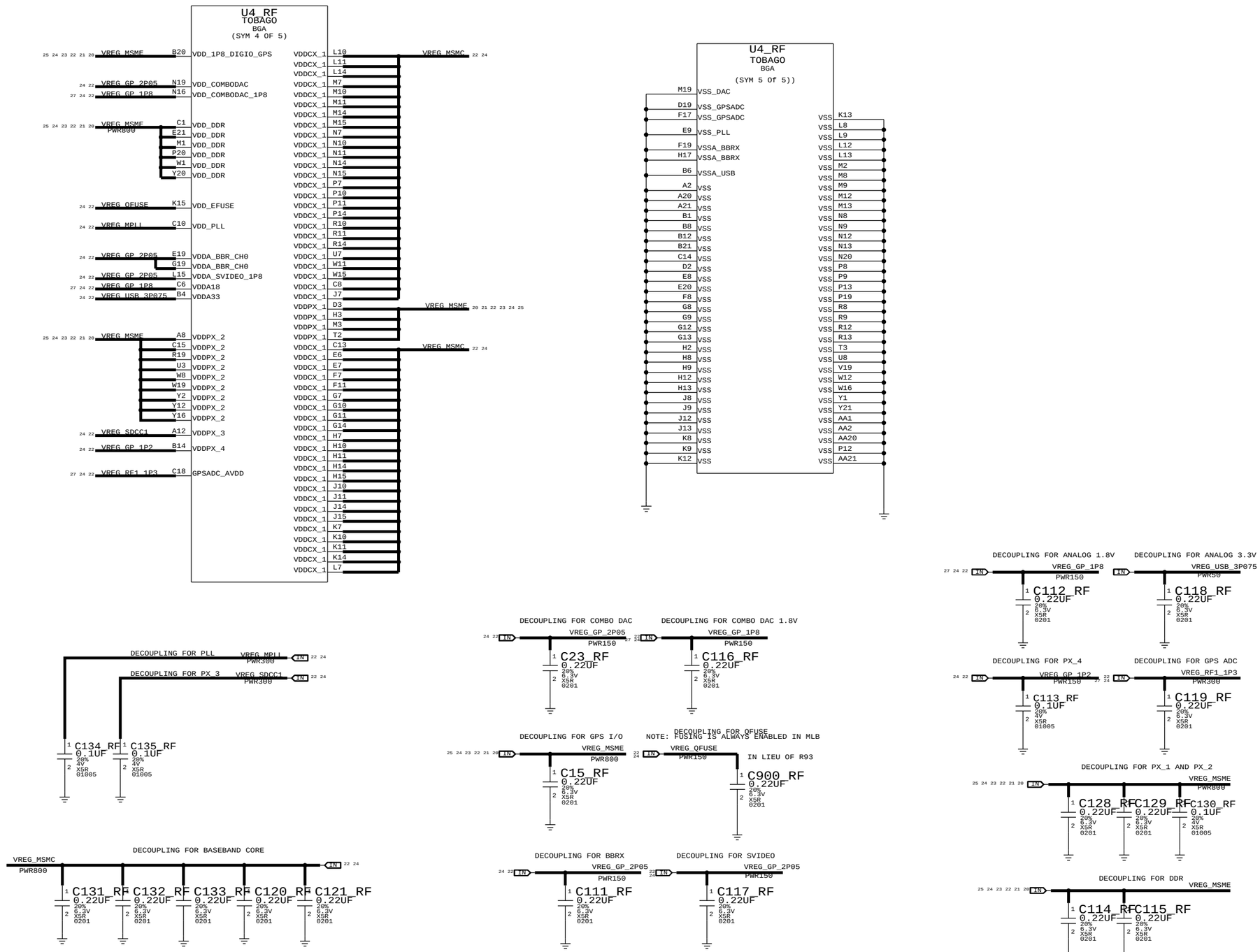

PAGE TITLE
BASEBAND POWER/DECOUPLING

Apple Inc.

DRAWING NUMBER 051-8890 SIZE D

REVISION 12.0.0

BRANCH

PAGE 4 OF 15

SHEET 22 OF 33

NOTICE OF PROPRIETARY PROPERTY:
THE INFORMATION CONTAINED HEREIN IS THE PROPRIETARY PROPERTY OF APPLE COMPUTER, INC.
THE POSESSOR AGREES TO THE FOLLOWING:
I TO MAINTAIN THIS DOCUMENT IN CONFIDENCE
II NOT TO REPRODUCE OR COPY IT
III NOT TO REVEAL OR PUBLISH IT IN WHOLE OR PART
IV ALL RIGHTS RESERVED

BASEBAND PMU

CONFIDENTIAL AND PROPRIETARY APPLE SYSTEM DESIGN. FOR REFERENCE PURPOSE ONLY - NOT A CHANGE REQUEST

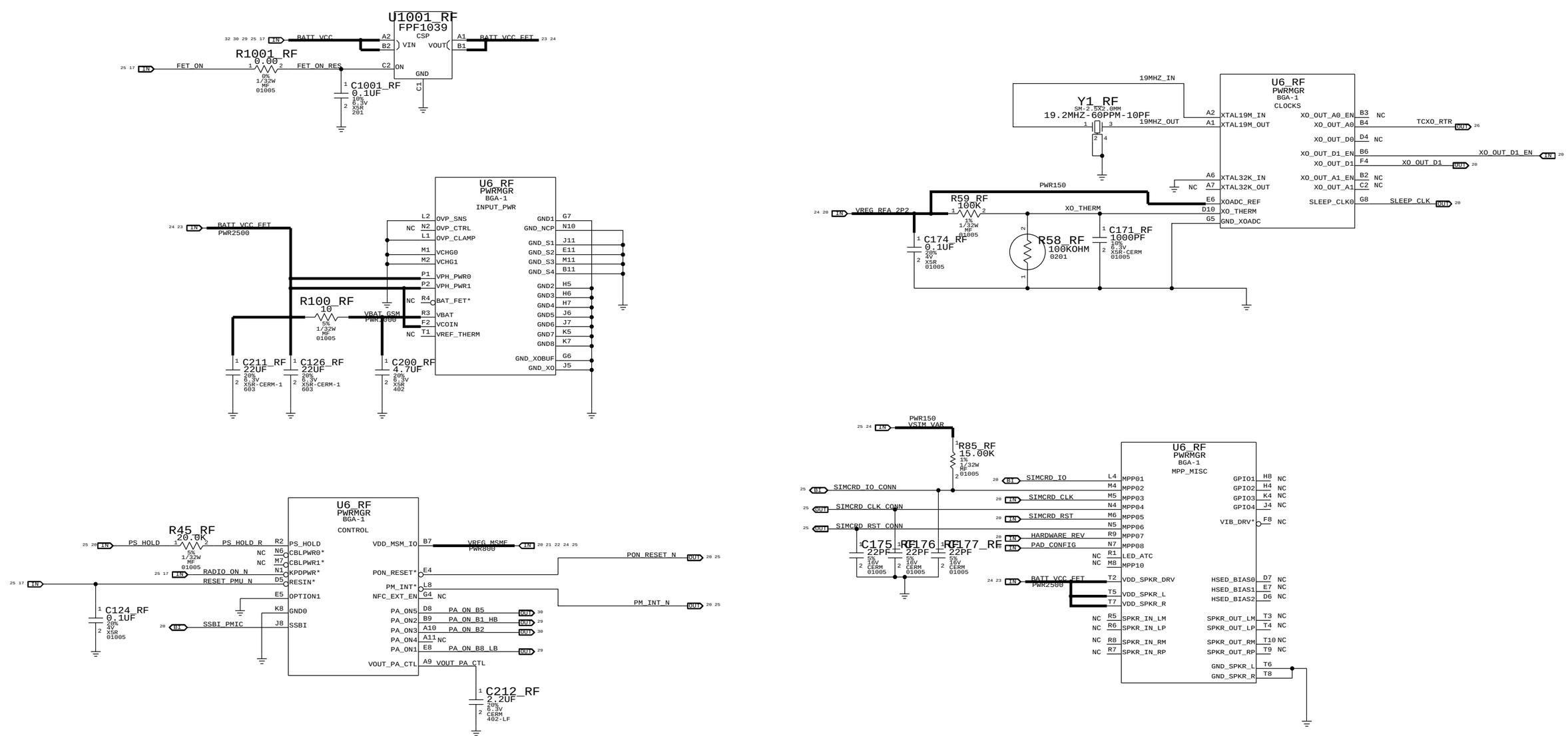

PAGE TITLE	BASEBAND PMU
Apple Inc.	DRAWING NUMBER 051-8890 SIZE D
	REVISION 12.0.0
	BRANCH
	PAGE 5 OF 15
	SHEET 23 OF 33

NOTICE OF PROPRIETARY PROPERTY:
THE INFORMATION CONTAINED HEREIN IS THE PROPRIETARY PROPERTY OF APPLE COMPUTER, INC.
THE POSESSOR AGREES TO THE FOLLOWING:
I TO MAINTAIN THIS DOCUMENT IN CONFIDENCE
II NOT TO REPRODUCE OR COPY IT
III NOT TO REVEAL OR PUBLISH IT IN WHOLE OR PART
IV ALL RIGHTS RESERVED

BASEBAND PMU CONT.

CONFIDENTIAL AND PROPRIETARY APPLE SYSTEM DESIGN. FOR REFERENCE PURPOSE ONLY - NOT A CHANGE REQUEST

POWER2: DIGITAL, ANALOG, RF

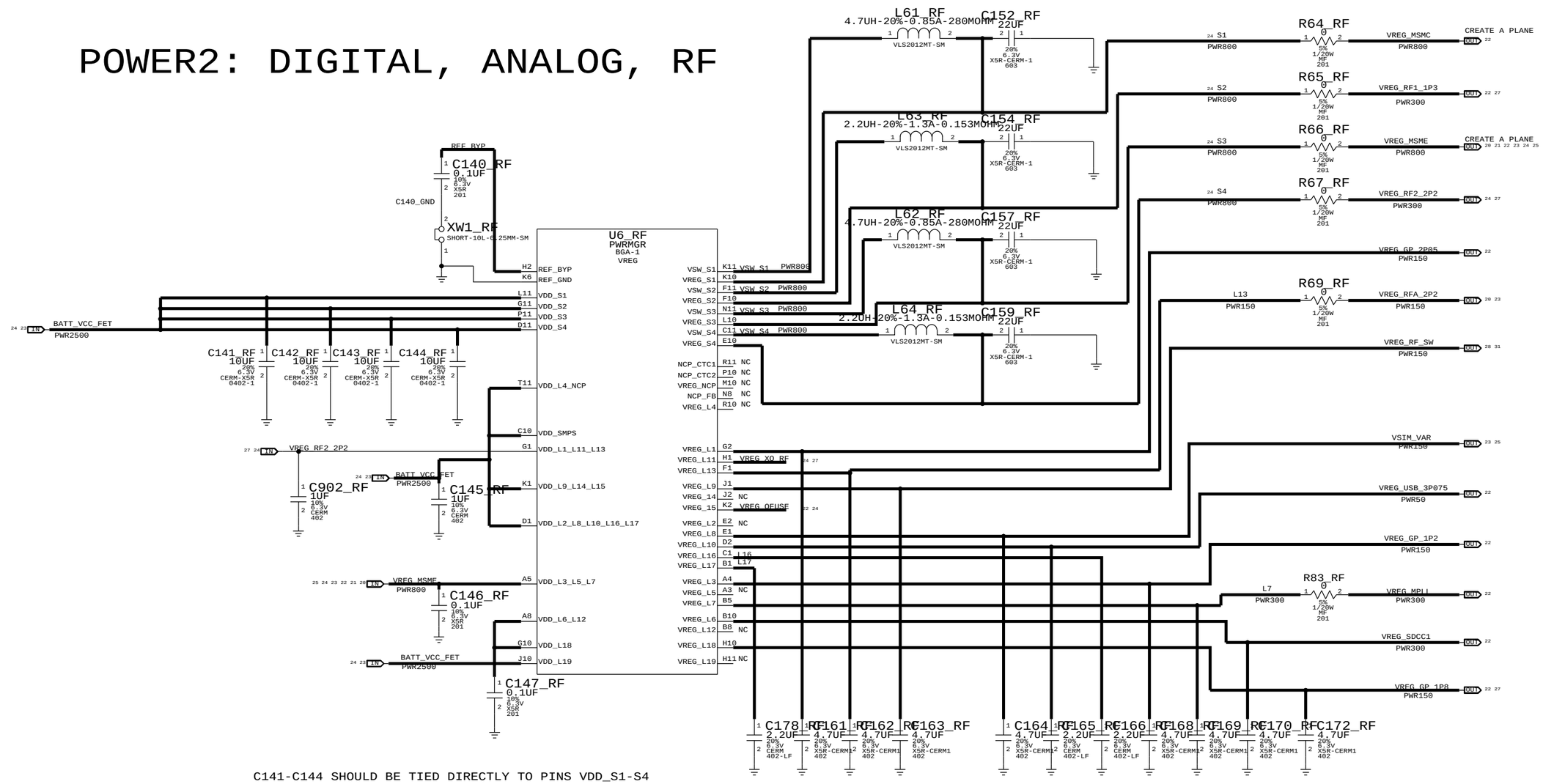

C141-C144 SHOULD BE TIED DIRECTLY TO PINS VDD_S1-S4

L16 AND L17 DECOUPLED PER EUREKA'S RECOMMENDATION

SMPS OUTPUT EXTRA BULK

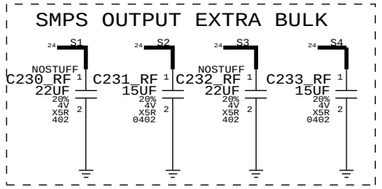

PAGE TITLE	BASEBAND PMU
Apple Inc.	DRAWING NUMBER 051-8890 SIZE D
	REVISION 12.0.0
	BRANCH
	PAGE 6 OF 15
	SHEET 24 OF 33

NOTICE OF PROPRIETARY PROPERTY:
THE INFORMATION CONTAINED HEREIN IS THE PROPRIETARY PROPERTY OF APPLE COMPUTER, INC.
THE POSESSOR AGREES TO THE FOLLOWING:
I TO MAINTAIN THIS DOCUMENT IN CONFIDENCE
II NOT TO REPRODUCE OR COPY IT
III NOT TO REVEAL OR PUBLISH IT IN WHOLE OR PART
IV ALL RIGHTS RESERVED

CONFIDENTIAL AND PROPRIETARY APPLE SYSTEM DESIGN. FOR REFERENCE PURPOSE ONLY - NOT A CHANGE REQUEST

AP CONNECTIONS

OK 25 23 17 32 58 25 BATT_VCC OUT

OK 17 20 GSM_TXBURST_IND OUT
OK 17 20 BB_RST_N IN
OK 17 20 RESET_DET_N OUT
OK 17 20 25 RADIO_ON_N IN
OK 17 20 25 FET_ON IN
OK 17 20 25 RESET_PMU_N IN
OK 17 20 25 BB_WAKE_AP OUT
25 17 RF_RESET_N OUT
OK 17 20 IPC_MRDY IN
OK 17 20 IPC_SRDY OUT

OK 17 20 BB_HSIC_RDY OUT
OK 17 20 IPC_GPIO4 IO
OK 17 20 HOST_BB_HSIC_RDY IN
OK 17 20 25 BB_EMERGENCY_DWLD IN

OK 17 20 25 BB_USB_VBUS IN
OK 17 20 25 BB_USB_DP IO
OK 17 20 25 BB_USB_DN IO

OK 17 20 25 BB_UART_TXD OUT
OK 17 20 25 BB_UART_RXD IN
OK 17 20 25 BB_UART_RTS_N OUT
OK 17 20 25 BB_UART_CTS_N IN

OK 17 20 25 BB_I2S_CLK IN
OK 17 20 25 BB_I2S_WS IN
OK 17 20 25 BB_I2S_TXD OUT
OK 17 20 25 BB_I2S_RXD IN

OK 32 17 WL_BT_VDDIO IN
OK 32 17 BT_REG_ON IN
OK 32 17 CLK32K_AP 2X IN

OK 25 17 32 WLAN_REG_ON IN
OK 25 17 32 WLAN_SDIO_CLK IO
OK 25 17 32 WLAN_SDIO_CMD IO
OK 25 17 32 WLAN_SDIO_DATA<3. 0> IO
OK 32 17 HOST_WAKE_WLAN OUT
OK 32 17 WLAN_HSIC_RDY OUT
OK 32 17 HOST_WLAN_HSIC_RDY IN

OK 32 17 HOST_WAKE_BT OUT
OK 25 17 32 BT_RESET_N IN
OK 32 17 BT_WAKE IN
OK 25 17 32 BT_UART_TXD OUT
OK 25 17 32 BT_UART_RXD IN
OK 25 17 32 BT_UART_RTS_N OUT
OK 25 17 32 BT_UART_CTS_N IN

OK 32 17 BT_PCM_CLK IO
OK 32 17 BT_PCM_SYNC IO
OK 32 17 BT_PCM_OUT IO
OK 32 17 BT_PCM_IN IO

OK 20 17 25 HSIC_BB_DATA IO
OK 20 17 25 HSIC_BB_STROBE IO
OK 25 17 32 HSIC_WLAN_DATA IO
OK 25 17 32 HSIC_WLAN_STROBE IO

TP1_RF A TP-P6 NOSTUFF — PS_HOLD 20 23
TP2_RF A TP-P6 NOSTUFF — PON_RESET_N 20 23

SLEEP_CLK_RF -- TEST POINT

XO_OUT_D1_RF -- TEST POINT

TCXO_RTR_RF -- TEST POINT

SSBI_PMIC -- TEST POINT

TP10_RF A TP-P6 NOSTUFF — PM_INT_N 20 23

WLAN

PP12_RF P4MM SM PP 1 NOSTUFF — WLAN_REG_ON 17 25 32
PP13_RF P4MM SM PP 1 NOSTUFF — WLAN_GPS_CLK32K 32

DIGITAL AUDIO

PP1_RF P4MM SM PP 1 NOSTUFF — BB_I2S_CLK 17 20 25
PP2_RF P4MM SM PP 1 NOSTUFF — BB_I2S_WS 17 20 25
PP3_RF P4MM SM PP 1 NOSTUFF — BB_I2S_TXD 17 20 25
PP4_RF P4MM SM PP 1 NOSTUFF — BB_I2S_RXD 17 20 25

POWER DOMAINS

PP15_RF P4MM SM PP 1 NOSTUFF — DCDC_EN 20 29
TP FOR BOOT_SCUR

NOSTUFF
J10_RF MM4829-2702 F-ST-SM — 1 HSIC_BB_STROBE 17 20 25
NOSTUFF — TP FOR HSIC - ONE VIA

J9_RF MM4829-2702 F-ST-SM — 1 HSIC_BB_DATA 17 20 25
TP FOR HSIC - ONE VIA

TP98_RF A TP-P6 NOSTUFF — HSIC_WLAN_STROBE 17 25 32
TP FOR HSIC - ONE VIA

TP99_RF A TP-P6 NOSTUFF — HSIC_WLAN_DATA 17 25 32
TP FOR HSIC - ONE VIA

PP100_RF P4MM SM PP 1 NOSTUFF
PP101_RF P4MM SM PP 1 NOSTUFF
PP102_RF P4MM SM PP 1 NOSTUFF
PP103_RF P4MM SM PP 1 NOSTUFF

DEBUG CONNECTOR

J1_RF AXE680124 M-ST-SM

BATT_VCC 17 23 25 29 30 32

Pin	Signal	Pin	Signal
82		81	
2		1	
4		3	
6		5	
8		7	
10	DEBUG_RST_N (OK 20 20 OUT)	9	VREG_MSME (20 21 22 23 24)
12	RESET_PMU_N (OK 17 20 25 OUT)	11	RF_RESET_N (OUT) CHECK THIS
14	RADIO_ON_N (OK 17 20 25 23 OUT)	13	
16		15	BT_RESET_N (OUT 17 25 32)
18	BB_USB_VBUS (OK 17 20 25 OUT)	17	WLAN_REG_ON (OUT 17 25 32)
20	BB_USB_DP (OK 17 20 25 20 BI)	19	BT_UART_TXD (IN 17 25 32)
22	BB_USB_DN (OK 17 20 25 20 BI)	21	BT_UART_RXD (OUT 17 25 32)
24		23	BT_UART_RTS_N (IN 17 25 32)
26	BB_JTAG_TCK (OK 20 OUT)	25	BT_UART_CTS_N (OUT 17 25 32)
28	BB_JTAG_TMS (OK 20 OUT)	27	
30	BB_JTAG_TDO (OK 20 IN)	29	NC — EXT_SDIO_VCC
32	BB_JTAG_TDI (OK 20 OUT)	31	NC
34	BB_JTAG_TRST_N (OK 20 OUT)	33	WLAN_SDIO_CLK (OUT 17 25 32)
36	BB_JTAG_RTCK (OK 20 IN)	35	WLAN_SDIO_CMD (BI 17 25 32)
38		37	WLAN_SDIO_DATA<3> (BI 17 25 32)
40	NC	39	WLAN_SDIO_DATA<2> (BI 17 25 32)
42	NC	41	WLAN_SDIO_DATA<1> (BI 17 25 32)
44	NC	43	WLAN_SDIO_DATA<0> (BI 17 25 32)
46	NC	45	NC — WLAN_TCK
48	NC	47	NC — WLAN_TMS
50	NC	49	NC — WLAN_TDO
52	NC	51	NC — WLAN_TDI
54	NC	53	NC — WLAN_TRST_N
56	NC	55	
58	NC	57	NC
60	NC	59	NC
62		61	NC
64	BB_UART_TXD (OK 17 20 25 IN)	63	NC
66	BB_UART_RXD (OK 17 20 25 OUT)	65	NC
68	BB_UART_RTS_N (OK 17 20 25 IN)	67	NC
70	BB_UART_CTS_N (OK 17 20 25 OUT)	69	
72	DEBUG_GPIO_LED (OK 20 IN)	71	VSIM_VAR (23 24 25)
74	BB_EMERGENCY_DWLD (OK 17 20 25 OUT)	73	SIM_DETECT (20 25)
76	FET_ON (OK 17 20 25 23 OUT)	75	SIMCRD_RST_CONN (23 25)
78	NC	77	SIMCRD_CLK_CONN (23 25)
80	NC	79	SIMCRD_IO_CONN (23 25)
84		83	

CONTROL

TP74_RF A TP-P6 NOSTUFF — RADIO_ON_N 17 23 25
TP31_RF A TP-P6 NOSTUFF — RESIN_N 20
TP30_RF A TP-P6 NOSTUFF — DEBUG_RST_N 20 25
TP7_RF A TP-P6 NOSTUFF — RESET_PMU_N 17 23 25

UART

TP82_RF A TP-P6 NOSTUFF — BB_UART_TXD 17 20 25
TP89_RF A TP-P6 NOSTUFF — BB_UART_RXD 17 20 25
TP28_RF A TP-P6 NOSTUFF — BB_UART_RTS_N 17 20 25
TP29_RF A TP-P6 NOSTUFF — BB_UART_CTS_N 17 20 25

SIM CARD CONNECTOR

APN:512S0083

25 24 23 VSIM_VAR
C9_RF 0.1UF 10% 16V X5R-CERM 0201

J8_RF SIM-CARD-N90 F-ST-SM

Pin	Signal	Pin	Signal
1	VCC	6	VPP
2	RESET (25 23 SIMCRD_RST_CONN)	7	I/O — SIMCRD_IO_CONN (23 25)
3	CLK (25 23 SIMCRD_CLK_CONN)	12	DETECT — SIM_DETECT (20 25)
8 9 10 11 13 5	GND		

DZ1_RF ESDALC6V1-5T6 UDFN6

Pin	Signal	Pin	Signal
1	SIMCRD_RST_CONN (25 23)	6	SIMCRD_IO_CONN (23 25)
2		5	SIM_DETECT (20 25)
3	SIMCRD_CLK_CONN (25 23)	4	VSIM_VAR (VSIM 23 24)

PAGE TITLE: SYSTEM & DEBUG CONNECTORS

Apple Inc.

DRAWING NUMBER: 051-8890 SIZE: D
REVISION: 12.0.0
BRANCH:
PAGE: 7 OF 15
SHEET: 25 OF 33

NOTICE OF PROPRIETARY PROPERTY:
THE INFORMATION CONTAINED HEREIN IS THE PROPRIETARY PROPERTY OF APPLE COMPUTER, INC.
THE POSESSOR AGREES TO THE FOLLOWING:
I TO MAINTAIN THIS DOCUMENT IN CONFIDENCE
II NOT TO REPRODUCE OR COPY IT
III NOT TO REVEAL OR PUBLISH IT IN WHOLE OR PART
IV ALL RIGHTS RESERVED

CONFIDENTIAL AND PROPRIETARY APPLE SYSTEM DESIGN. FOR REFERENCE PURPOSE ONLY - NOT A CHANGE REQUEST

RF TRANSCEIVER

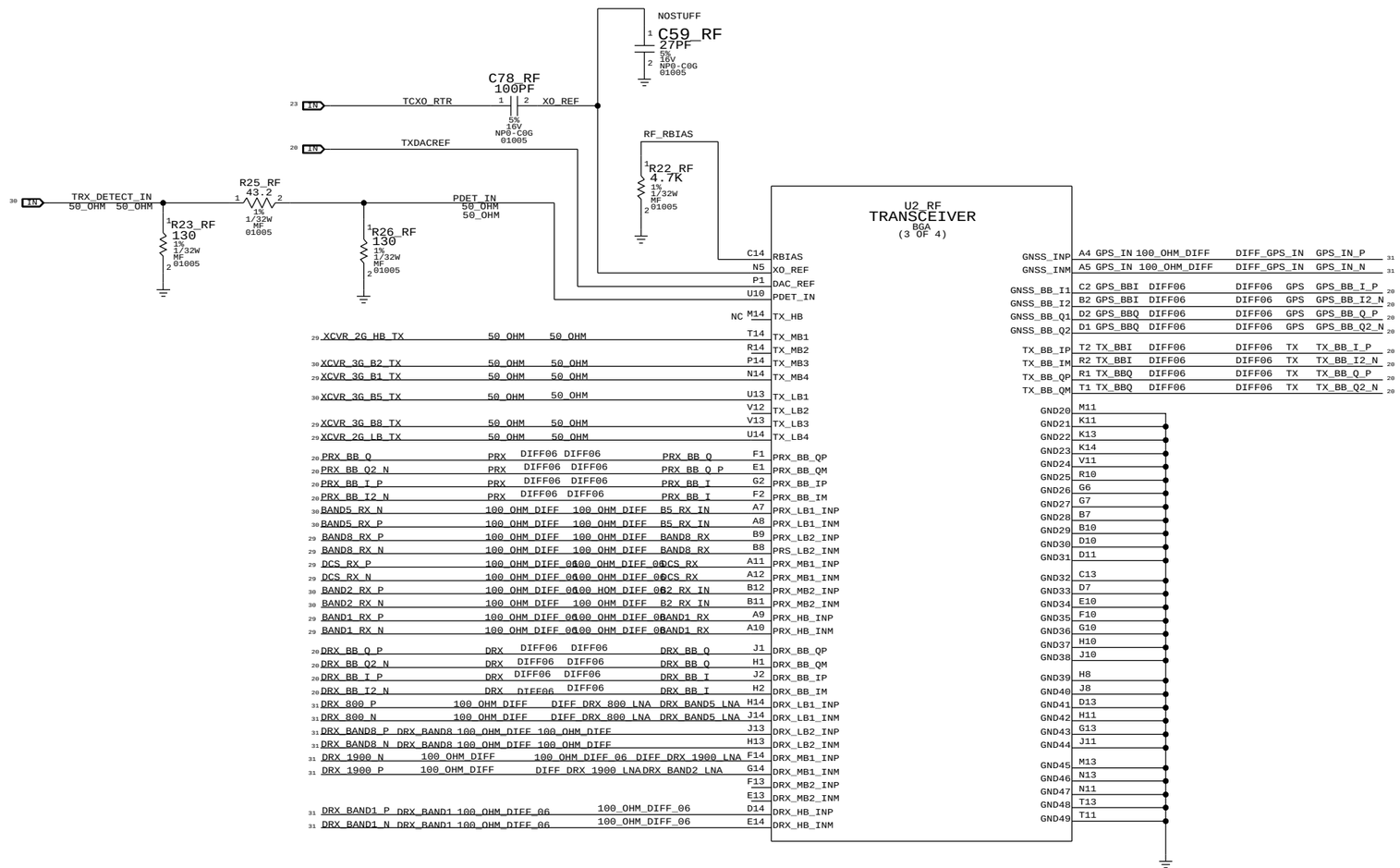

PAGE TITLE
RF RX/TX INTERFACE

Apple Inc.

DRAWING NUMBER 051-8890 SIZE D
REVISION 12.0.0
BRANCH
PAGE 8 OF 15
SHEET 26 OF 33

NOTICE OF PROPRIETARY PROPERTY:
THE INFORMATION CONTAINED HEREIN IS THE PROPRIETARY PROPERTY OF APPLE COMPUTER, INC.
THE POSESSOR AGREES TO THE FOLLOWING:
I TO MAINTAIN THIS DOCUMENT IN CONFIDENCE
II NOT TO REPRODUCE OR COPY IT
III NOT TO REVEAL OR PUBLISH IT IN WHOLE OR PART
IV ALL RIGHTS RESERVED

CONFIDENTIAL AND PROPRIETARY APPLE SYSTEM DESIGN. FOR REFERENCE PURPOSE ONLY - NOT A CHANGE REQUEST

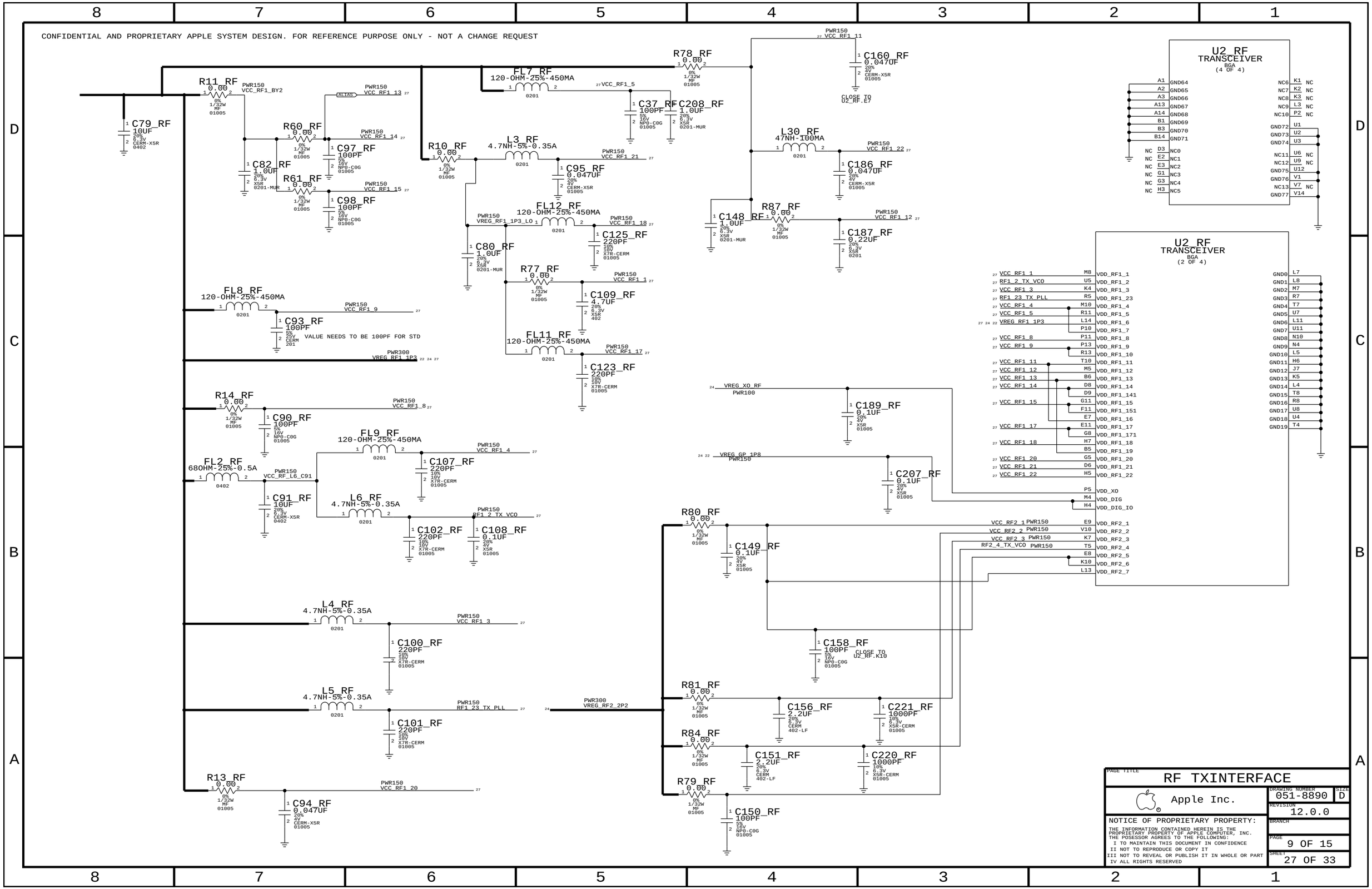

CONFIDENTIAL AND PROPRIETARY APPLE SYSTEM DESIGN. FOR REFERENCE PURPOSE ONLY - NOT A CHANGE REQUEST

RF TRANSCEIVER AND ASM

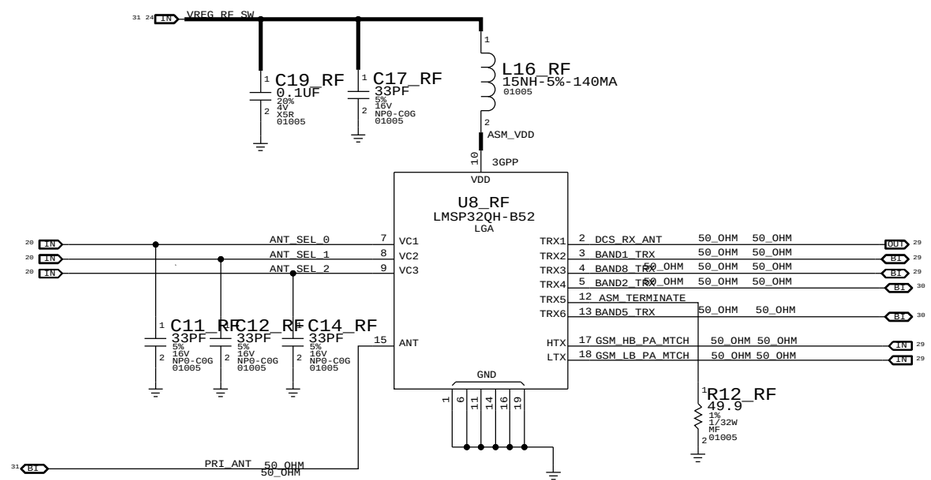

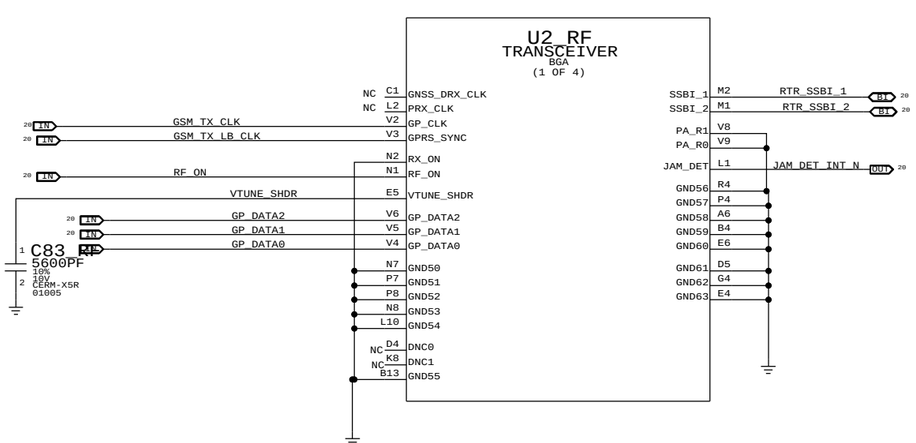

PAGE TITLE	RF TRANSCEIVER AND ASM
	Apple Inc.
DRAWING NUMBER	051-8890
SIZE	D
REVISION	12.0.0
BRANCH	
PAGE	10 OF 15
SHEET	28 OF 33

NOTICE OF PROPRIETARY PROPERTY:
THE INFORMATION CONTAINED HEREIN IS THE PROPRIETARY PROPERTY OF APPLE COMPUTER, INC.
THE POSESSOR AGREES TO THE FOLLOWING:
I TO MAINTAIN THIS DOCUMENT IN CONFIDENCE
II NOT TO REPRODUCE OR COPY IT
III NOT TO REVEAL OR PUBLISH IT IN WHOLE OR PART
IV ALL RIGHTS RESERVED

CONFIDENTIAL AND PROPRIETARY APPLE SYSTEM DESIGN. FOR REFERENCE PURPOSE ONLY - NOT A CHANGE REQUEST

MMPA,DC/DC CONVERTER & FILTER BANK

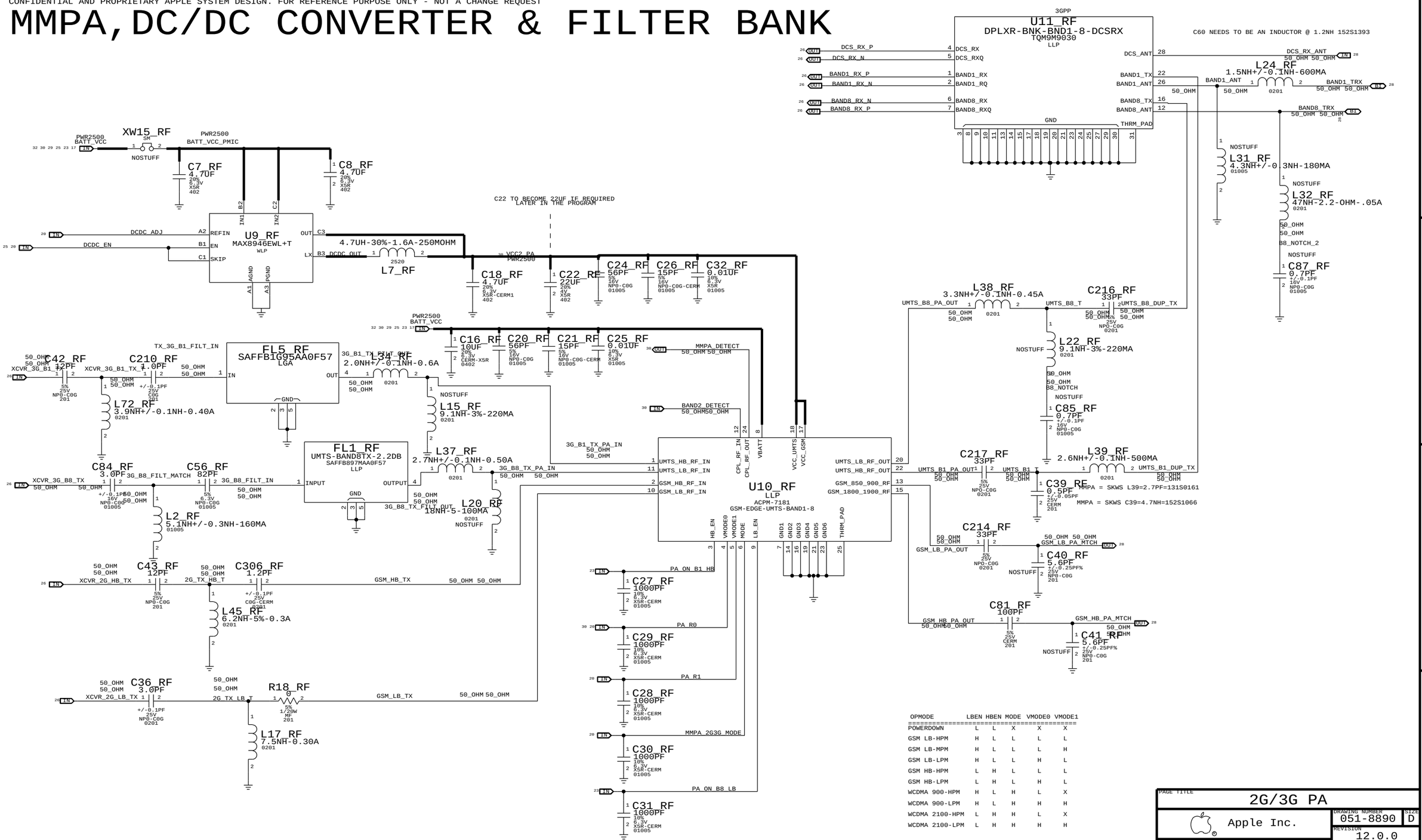

OPMODE	LBEN	HBEN	MODE	VMODE0	VMODE1
POWERDOWN	L	L	X	X	X
GSM LB-HPM	H	L	L	L	L
GSM LB-MPM	H	L	L	L	H
GSM LB-LPM	H	L	L	H	L
GSM HB-HPM	L	H	L	L	L
GSM HB-LPM	L	H	L	H	L
WCDMA 900-HPM	H	L	H	L	X
WCDMA 900-LPM	H	L	H	H	H
WCDMA 2100-HPM	L	H	H	L	X
WCDMA 2100-LPM	L	H	H	H	H

PAGE TITLE: 2G/3G PA

Apple Inc.

DRAWING NUMBER: 051-8890 SIZE: D

REVISION: 12.0.0

BRANCH:

PAGE: 11 OF 15

SHEET: 29 OF 33

NOTICE OF PROPRIETARY PROPERTY:
THE INFORMATION CONTAINED HEREIN IS THE PROPRIETARY PROPERTY OF APPLE COMPUTER, INC.
THE POSESSOR AGREES TO THE FOLLOWING:
I TO MAINTAIN THIS DOCUMENT IN CONFIDENCE
II NOT TO REPRODUCE OR COPY IT
III NOT TO REVEAL OR PUBLISH IT IN WHOLE OR PART
IV ALL RIGHTS RESERVED

CONFIDENTIAL AND PROPRIETARY APPLE SYSTEM DESIGN. FOR REFERENCE PURPOSE ONLY - NOT A CHANGE REQUEST

BAND 2 AND BAND 5 PAD

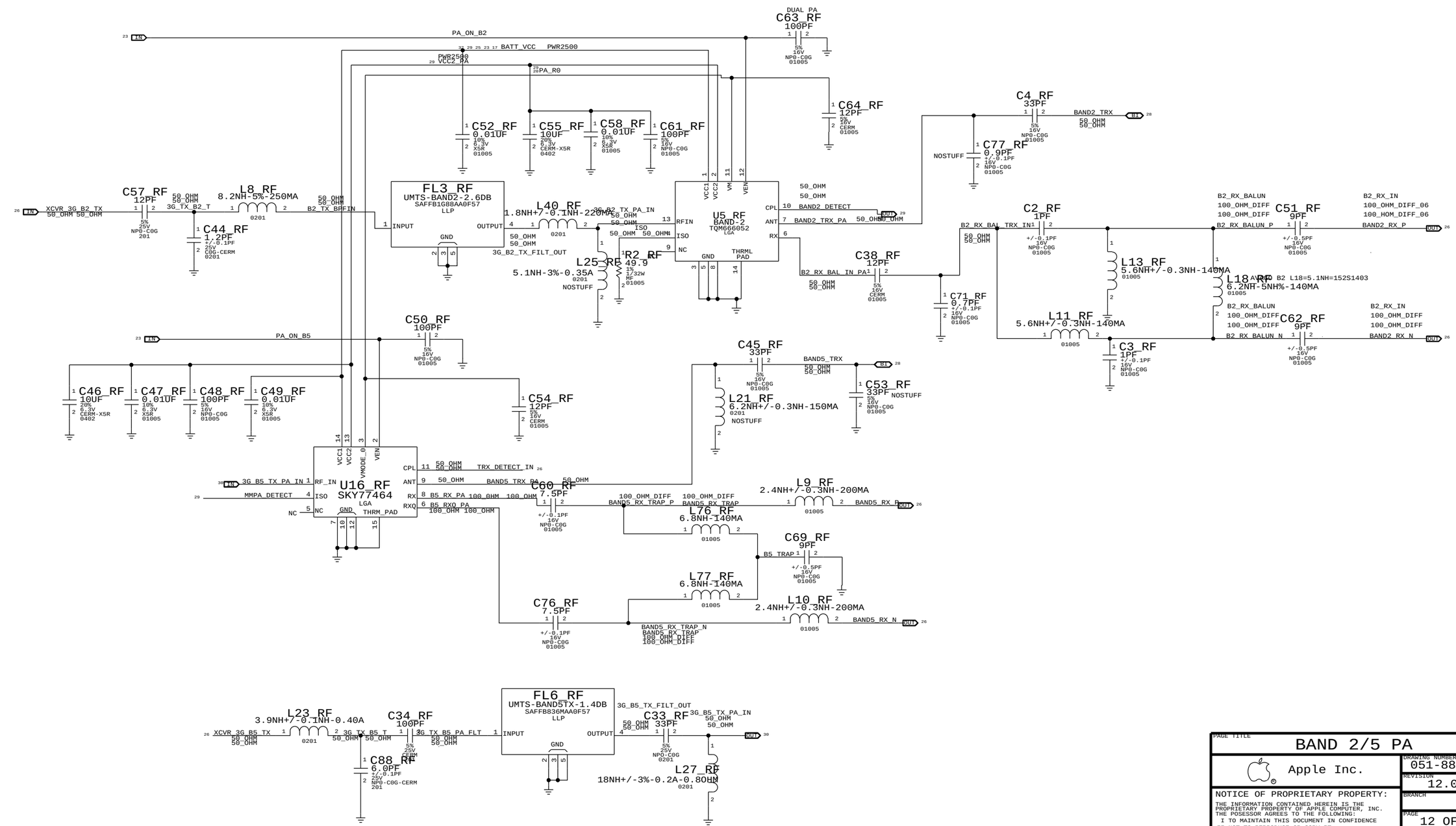

PAGE TITLE	BAND 2/5 PA
	Apple Inc.
DRAWING NUMBER	051-8890
SIZE	D
REVISION	12.0.0
BRANCH	
PAGE	12 OF 15
SHEET	30 OF 33

NOTICE OF PROPRIETARY PROPERTY:
THE INFORMATION CONTAINED HEREIN IS THE PROPRIETARY PROPERTY OF APPLE COMPUTER, INC.
THE POSESSOR AGREES TO THE FOLLOWING:
I TO MAINTAIN THIS DOCUMENT IN CONFIDENCE
II NOT TO REPRODUCE OR COPY IT
III NOT TO REVEAL OR PUBLISH IT IN WHOLE OR PART
IV ALL RIGHTS RESERVED

DIVERSITY AND EXTERNAL GPS LNA

CONFIDENTIAL AND PROPRIETARY APPLE SYSTEM DESIGN. FOR REFERENCE PURPOSE ONLY - NOT A CHANGE REQUEST

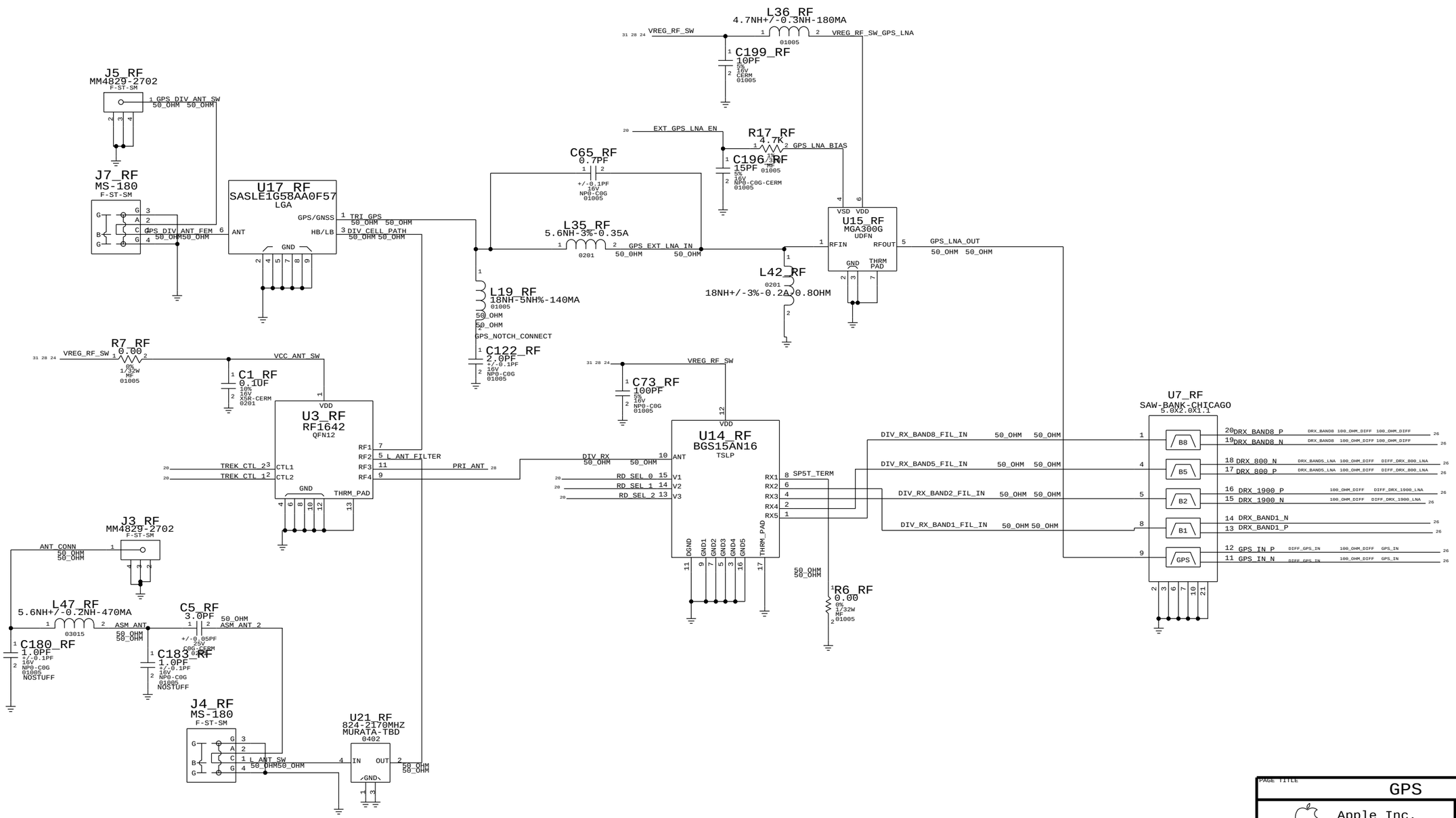

PAGE TITLE	GPS
Apple Inc.	DRAWING NUMBER 051-8890 SIZE D
	REVISION 12.0.0
NOTICE OF PROPRIETARY PROPERTY: THE INFORMATION CONTAINED HEREIN IS THE PROPRIETARY PROPERTY OF APPLE COMPUTER, INC. THE POSESSOR AGREES TO THE FOLLOWING: I TO MAINTAIN THIS DOCUMENT IN CONFIDENCE II NOT TO REPRODUCE OR COPY IT III NOT TO REVEAL OR PUBLISH IT IN WHOLE OR PART IV ALL RIGHTS RESERVED	BRANCH
	PAGE 13 OF 15
	SHEET 31 OF 33

CONFIDENTIAL AND PROPRIETARY APPLE SYSTEM DESIGN. FOR REFERENCE PURPOSES ONLY - NOT A CHANGE REQUEST

WLAN/BLUETOOTH

CONFIDENTIAL AND PROPRIETARY APPLE SYSTEM DESIGN. FOR REFERENCE PURPOSE ONLY - NOT A CHANGE REQUEST

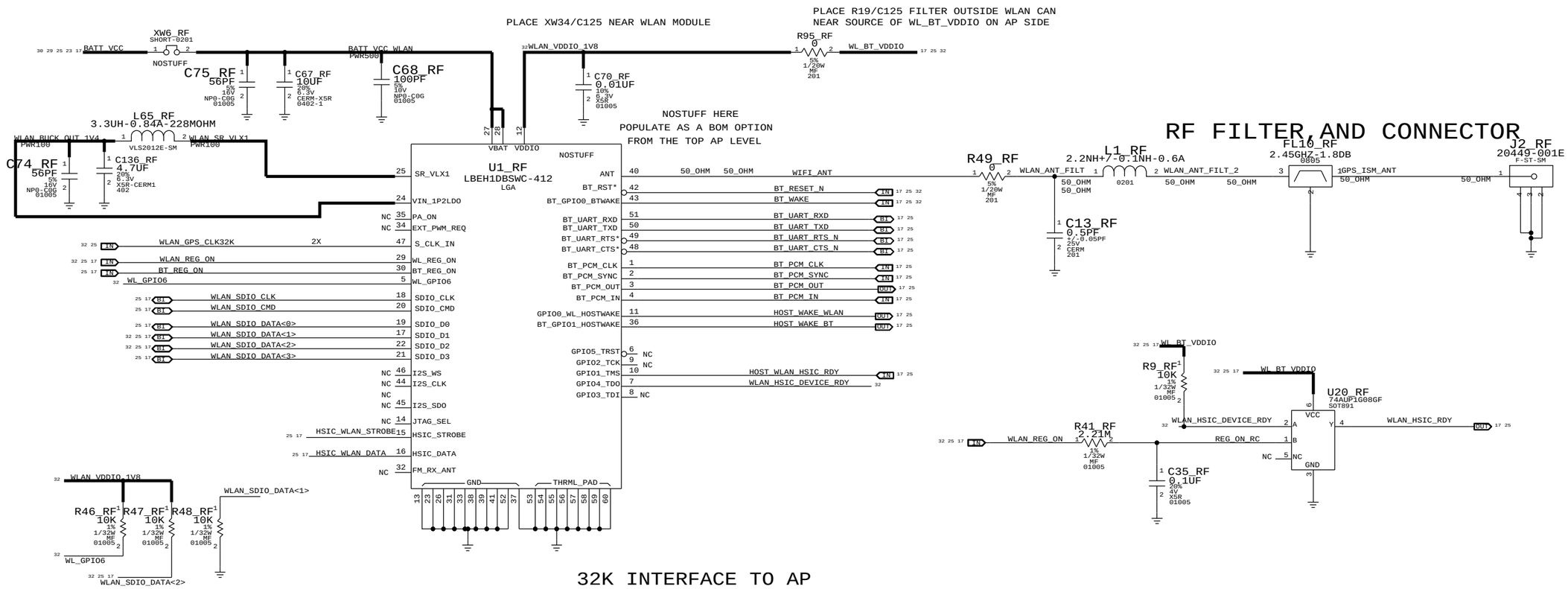

PAGE TITLE: WIFI/BLUEOOTH/FM RADIO

Apple Inc.

DRAWING NUMBER: 051-8890 SIZE: D

REVISION: 12.0.0

BRANCH:

PAGE: 14 OF 15

SHEET: 32 OF 33

NOTICE OF PROPRIETARY PROPERTY:
THE INFORMATION CONTAINED HEREIN IS THE PROPRIETARY PROPERTY OF APPLE COMPUTER, INC.
THE POSESSOR AGREES TO THE FOLLOWING:
I TO MAINTAIN THIS DOCUMENT IN CONFIDENCE
II NOT TO REPRODUCE OR COPY IT
III NOT TO REVEAL OR PUBLISH IT IN WHOLE OR PART
IV ALL RIGHTS RESERVED

CONFIDENTIAL AND PROPRIETARY APPLE SYSTEM DESIGN. FOR REFERENCE PURPOSE ONLY - NOT A CHANGE REQUEST

ANTENNA MATCHING

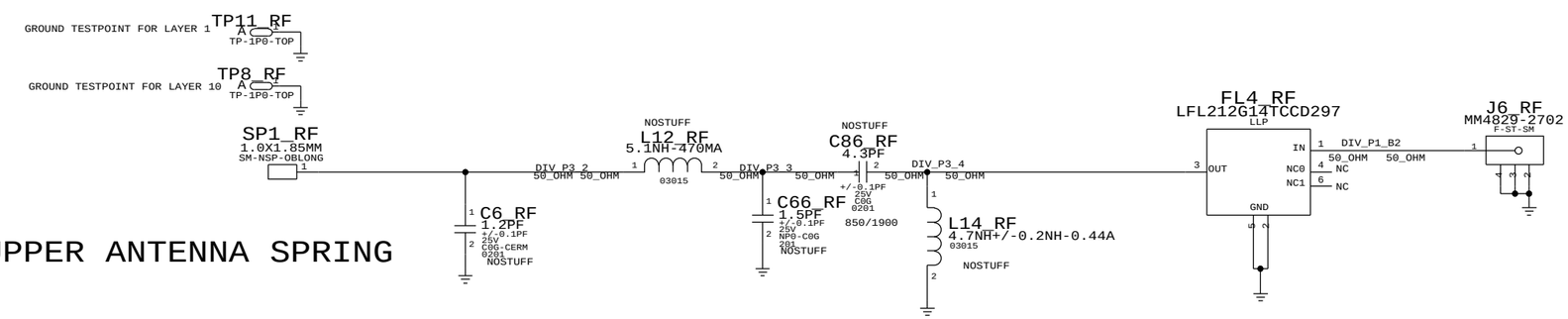

UPPER ANTENNA SPRING

NOTUFF ALL HERE !
SPECIFIED IN TOP LEVEL FOR US/EU VALUE

PAGE TITLE	?
Apple Inc.	DRAWING NUMBER 051-8890 SIZE D
	REVISION 12.0.0
	BRANCH
	PAGE 15 OF 15
	SHEET 33 OF 33

NOTICE OF PROPRIETARY PROPERTY:
THE INFORMATION CONTAINED HEREIN IS THE PROPRIETARY PROPERTY OF APPLE COMPUTER, INC.
THE POSESSOR AGREES TO THE FOLLOWING:
I TO MAINTAIN THIS DOCUMENT IN CONFIDENCE
II NOT TO REPRODUCE OR COPY IT
III NOT TO REVEAL OR PUBLISH IT IN WHOLE OR PART
IV ALL RIGHTS RESERVED