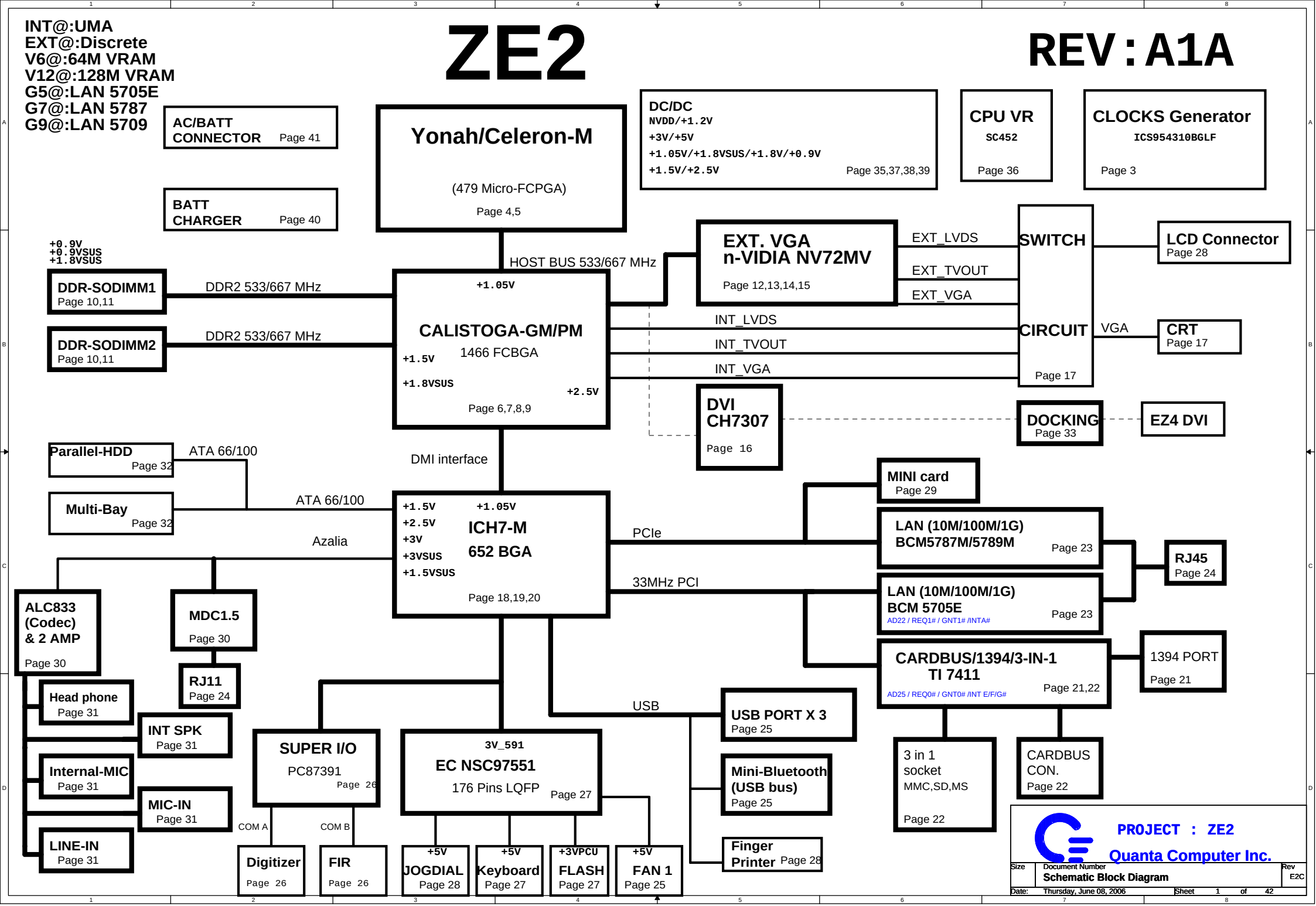
INT@:UMA
EXT@:Discrete
V6@:64M VRAM
V12@:128M VRAM
G5@:LAN 5705E
G7@:LAN 5787
G9@:LAN 5709
ZE2
REV : A1A
AC/BATT CONNECTOR Page 41
BATT CHARGER Page 40
Yonah/Celeron-M
(479 Micro-FCPGA)
Page 4,5
DC/DC
NVDD/+1.2V
+3V/+5V
+1.05V/+1.8VSUS/+1.8V/+0.9V
+1.5V/+2.5V
Page 35,37,38,39
CPU VR
SC452
Page 36
CLOCKS Generator
ICS954310BGLF
Page 3
+0.9V
+0.9VSUS
+1.8VSUS
DDR-SODIMM1
Page 10,11
DDR2 533/667 MHz
DDR-SODIMM2
Page 10,11
DDR2 533/667 MHz
HOST BUS 533/667 MHz
+1.05V
CALISTOGA-GM/PM
1466 FCBGA
+1.5V
+1.8VSUS
+2.5V
Page 6,7,8,9
EXT. VGA
n-VIDIA NV72MV
Page 12,13,14,15
EXT_LVDS
EXT_TVOUT
EXT_VGA
INT_LVDS
INT_TVOUT
INT_VGA
SWITCH
CIRCUIT
Page 17
VGA
LCD Connector
Page 28
CRT
Page 17
DVI
CH7307
Page 16
DOCKING
Page 33
EZ4 DVI
Parallel-HDD
Page 32
ATA 66/100
Multi-Bay
Page 32
ATA 66/100
DMI interface
+1.5V
+2.5V
+3V
+3VSUS
+1.5VSUS
+1.05V
ICH7-M
652 BGA
Page 18,19,20
Azalia
PCIe
33MHz PCI
USB
MINI card
Page 29
LAN (10M/100M/1G)
BCM5787M/5789M
Page 23
RJ45
Page 24
LAN (10M/100M/1G)
BCM 5705E
AD22 / REQ1# / GNT1# /INTA#
Page 23
CARDBUS/1394/3-IN-1
TI 7411
AD25 / REQ0# / GNT0# /INT E/F/G#
Page 21,22
1394 PORT
Page 21
ALC833
(Codec)
& 2 AMP
Page 30
MDC1.5
Page 30
RJ11
Page 24
Head phone
Page 31
INT SPK
Page 31
Internal-MIC
Page 31
MIC-IN
Page 31
LINE-IN
Page 31
SUPER I/O
PC87391
Page 26
3V_591
EC NSC97551
176 Pins LQFP
Page 27
USB PORT X 3
Page 25
Mini-Bluetooth
(USB bus)
Page 25
Finger
Printer Page 28
3 in 1
socket
MMC,SD,MS
Page 22
CARDBUS
CON.
Page 22
COM A
COM B
Digitizer
Page 26
FIR
Page 26
+5V
JOGDIAL
Page 28
+5V
Keyboard
Page 27
+3VPCU
FLASH
Page 27
+5V
FAN 1
Page 25
PROJECT : ZE2
Quanta Computer Inc.
Size
Document Number
Schematic Block Diagram
Rev
E2C
Date: Thursday, June 08, 2006
Sheet 1 of 42

5/5 page29 MINI CARD pin define changed for debug card
5/8 page31 Audio Jack GND connect to DGND
5/10 page09 modify GMCH power for G72MV(original some parts no stuff for descrete,modify to stuff)
5/10 page37,38 change PQ36,PQ37,PQ38,PQ40,PQ41,PQ45,PQ53 part number to BAM64020009 for EOL issue
5/10 page31 change D19,D20,D22 part number to BC1SS355Z05 for EOL issue
6/4 page26,27 change S_SERIRQ net name to SERIRQ for fix KB no function issue, and add a cap of SERIRQ if noise
6/4 page30 ,stuff U53 ,no stuff L60 for audio noise
6/4 page31 R633 change from 15K to 22K to fix speaker voice is too low issue
6/4 page31 tie SURR-L and SURR-R for fix no sound when volume bar adjust to right channel
6/4 page30 change R627,R629 from 0 ohm to 4.7K ohm for fix HP voice is too loud
6/4 page31 change R635,R640 change from 0 to 75 ohm for fix noise by ZC3 solution
6/4 page31 add cap on linein_PR for fix audio noise from docking Line in
6/4 page28 LCD connector pin34 change to +3V for fix EDID LCD issue
6/4 page13 add LCDID to VGA for Toshiba LCD that is no EDID support issue
6/4 page19 change USB I/O port from port1 to port2 for Bluetooth detection issue
6/4 page13 stuff R496 for fix no CRT issue by VGA SKU
6/4 page27 change 1M BIOS ROM from B-stage
6/4 page35 change PR55,PR146 to 100K and PC44,PC141 to 0.1uF to meet Nvidia power sequence requirement
6/4 page32 add ODD RST PU resistor for S/W not ready
6/4 page38 PL22 chagne p/n to CV-33D5MZ04 for package and footprint are difference issue
6/4 page42 add modem hole for modem NUT issue
6/4 page31 R630 change to LF part
6/4 page36 change PC15,PC16,PR16,PR18 value for power requirement
6/4 page35 change PR150 from 20K to 24K value for power requirement
6/4 page36 Add snubber of 2.2 ohm/2200pf on CPU core
6/4 page35,38,39 del short PAD
6/4 page28 un stuff CN3 PCI debug card
6/4 page15 R452,R478 change from 1K to 1.3K,R453,R469 change from 1K to 510 ohm ,Vref change from 0.5VDDQ to 0.7VDDQ for VRAM CLK un-stable issue
6/4 page14 R462, change from 1K to 1.3K,R461 change from 1K to 510 ohm ,Vref change from 0.5VDDQ to 0.7VDDQ for VRAM CLK un-stable issue
6/4 page42 change DIM H26,H35,H37 for SMT A open issue
6/7 page19 stuff R340 for PCI LAN wake up
6/7 page20,add RBAYID0,RBAYID1 PU for Swap Bay
6/8 page31,reserve 0 ohm resistor for EMI request
6/8 page19,change USB port for BT detection issue
6/9 page31 C836 change to 0.1uf for background noise
6/9 page40 change PD19 p/n for EOL issue

SKU	MB ID	BOM Property	ASSY PN	Description	VRAM vender
A test SKU1		ZE2A	31ZE2MB0006	ZE2 M/B ASSY (GM/5705E)	
A test SKU2		ZE2B	31ZE2MB0014	ZE2 M/B ASSY (PM/G72MV/64M/5787)	Samsung 8M*32
A test SKU3		ZE2C	31ZE2MB0022	ZE2 M/B ASSY(PM/G72MV/128M/5789)	Samsung 16M*32
B test SKU3		ZE2D	31ZE2MB0031	ZE2 M/B ASSY (GM)	

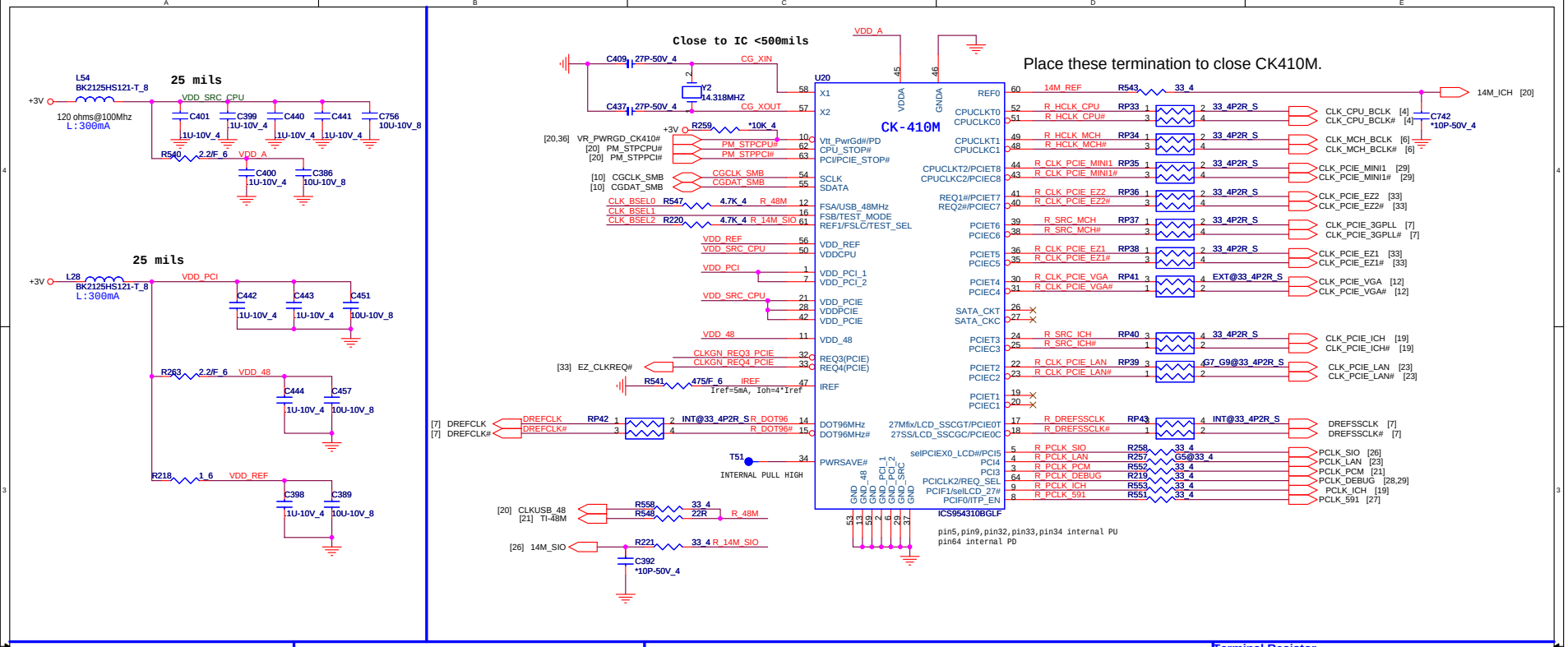

PCIE CLK enable/disable control

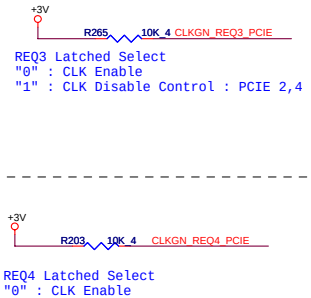

Starpping

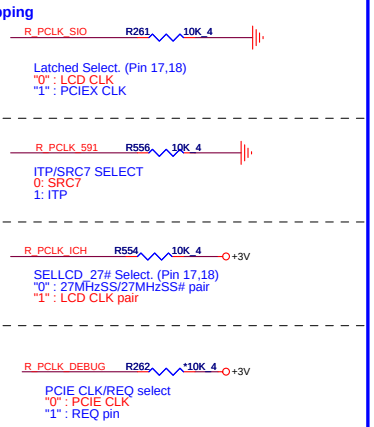

Frequence select

SEL2 SEL1 SEL0

FSC	FSB	FSA	CPU	SRC	PCI	
1	0	1	100	100	33	
0	0	1	133	100	33	Default
0	1	1	166	100	33	
0	1	0	200	100	33	
0	0	0	266	100	33	
1	0	0	333	100	33	
1	1	0	400	100	33	
1	1	1	200	100	33	

BSEL strappings need to be set for 533MHz Moby Dick
(Intel?915GM - Calistoga Interposer)
(if Calistoga is designed for 667MHz board).

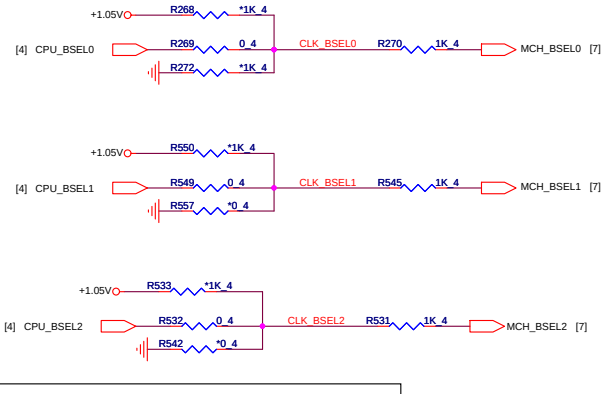

Terminal Resistor

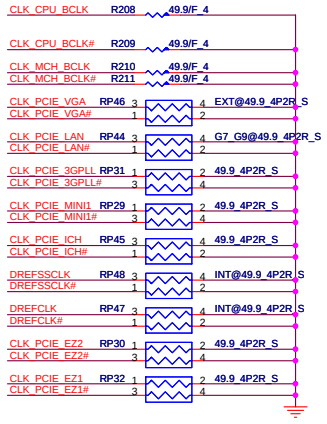

Reserve for EMI

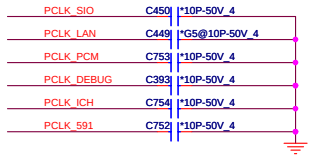

SM BUS level shift

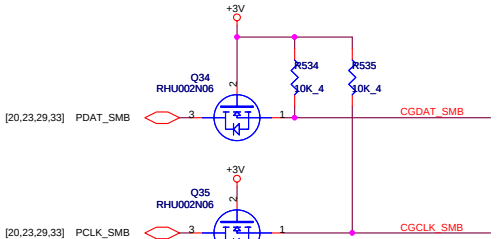

PCLK_SMB/PDAT_SMB(SB&LAN&MINI CARD&EZ,+3V_S5) CGCLK_SMB/CGDAT_SMB(CLK GEN&DDR,+3V)

Power check

+3V [4,7,9,10,12,13,16,17,18,19,20,21,22,23,26,27,28,29,30,32,33,34,35,36,37,38,39]
+1.05V [4,5,6,9,18,20,36,37,38]

PROJECT : ZE2

Quanta Computer Inc.

Size	Document Number	Rev
	Clock Gen.	B2A

Date: Thursday, June 08, 2006 Sheet 3 of 42

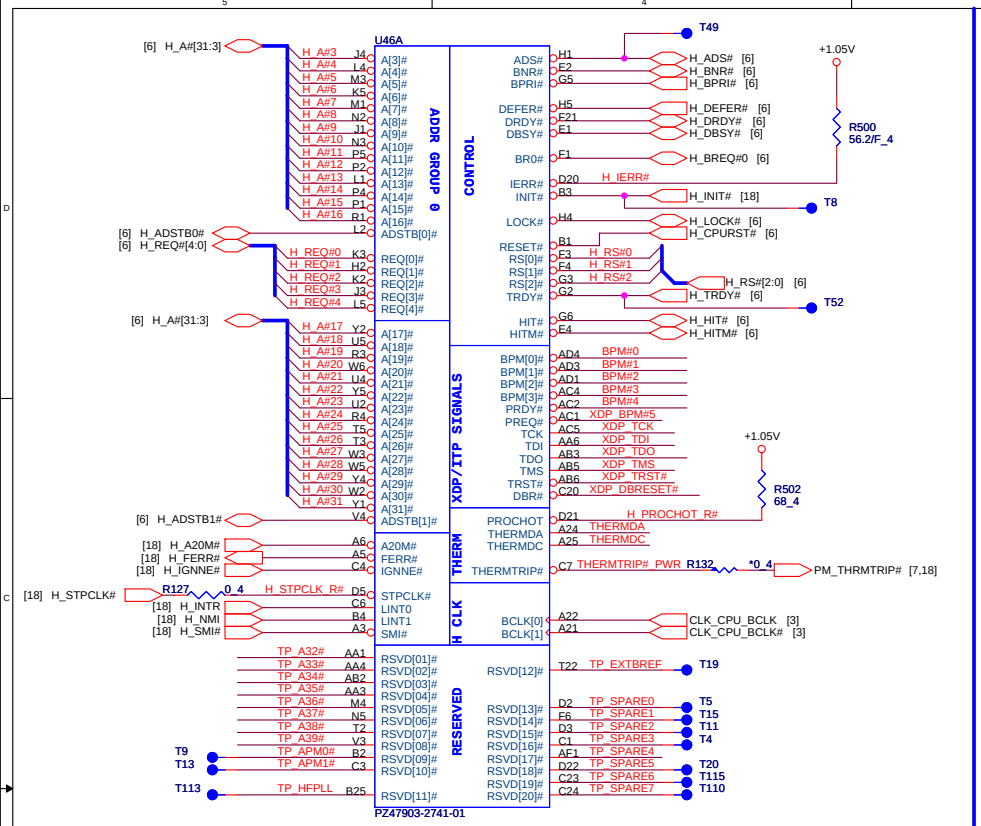

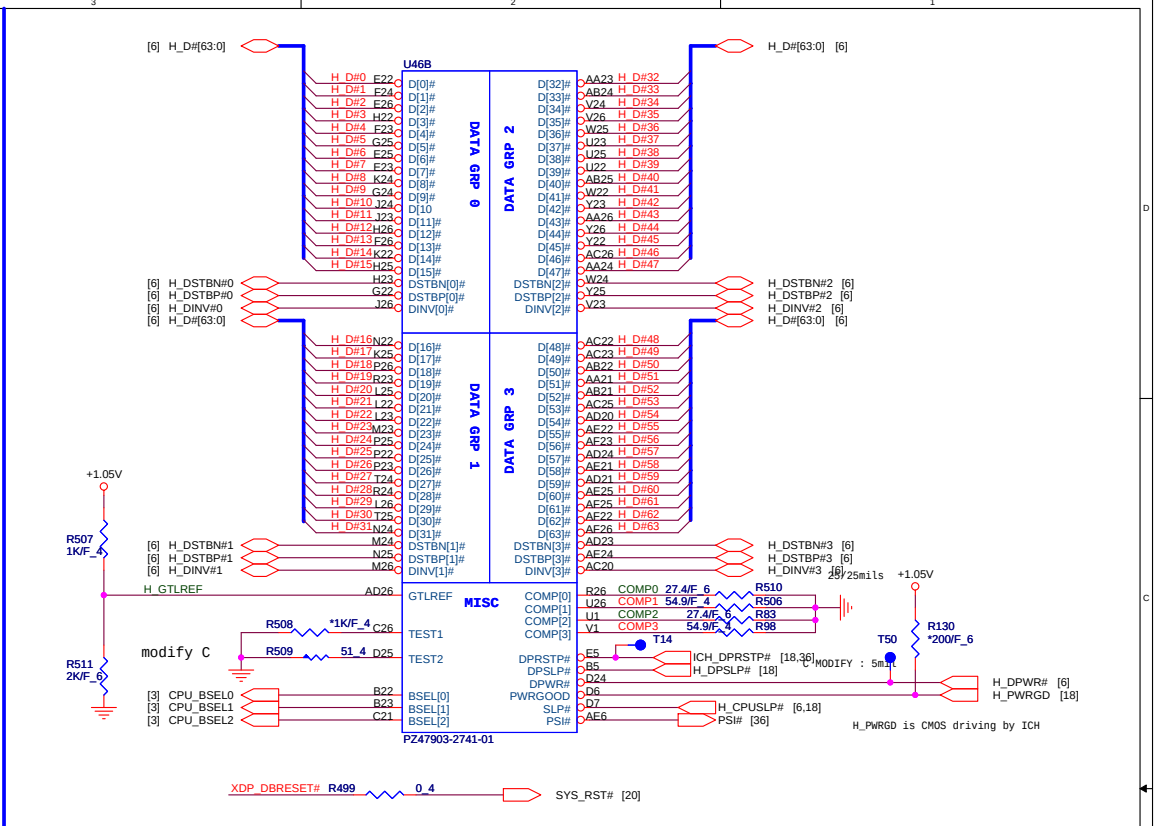

Thermal IC

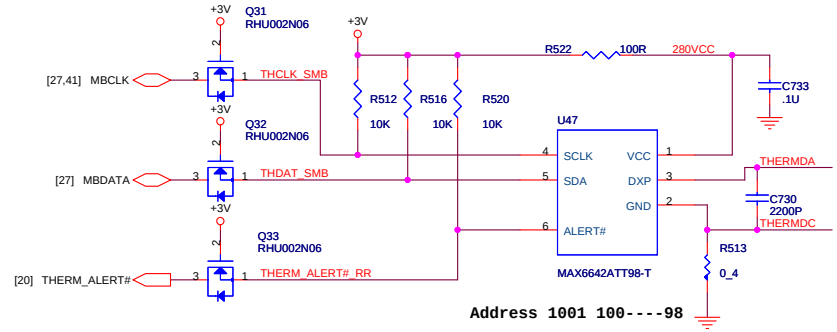

Address 1001 100----98

Thermal protect

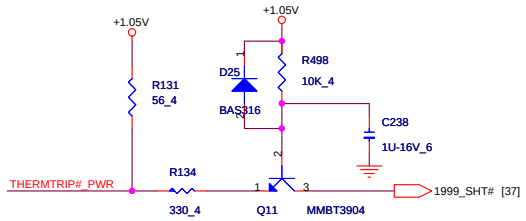

PU/PD

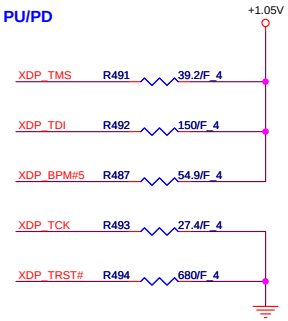

XDP PU_R < 0.2"

XDP_TCK PD 27.4/1% ?
XDP_TRST PD 680ohm /5% ?
XDP_TDI PU 150ohm /1.05V
XDP_TMS PU 39.2/1%?
XDP_TDO PU 54.9ohm?
For ITP700

Power check

+3V [3,7,9,10,12,13,16,17,18,19,20,21,22,23,26,27,28,29,30,32,33,34,35,36,37,38,39]
+1.05V [3,5,6,9,18,20,36,37,38]

PROJECT : ZE2

Quanta Computer Inc.

Size	Document Number	Rev
	YOHNA (HOST)	B2A

Date: Thursday, June 08, 2006 Sheet 4 of 42

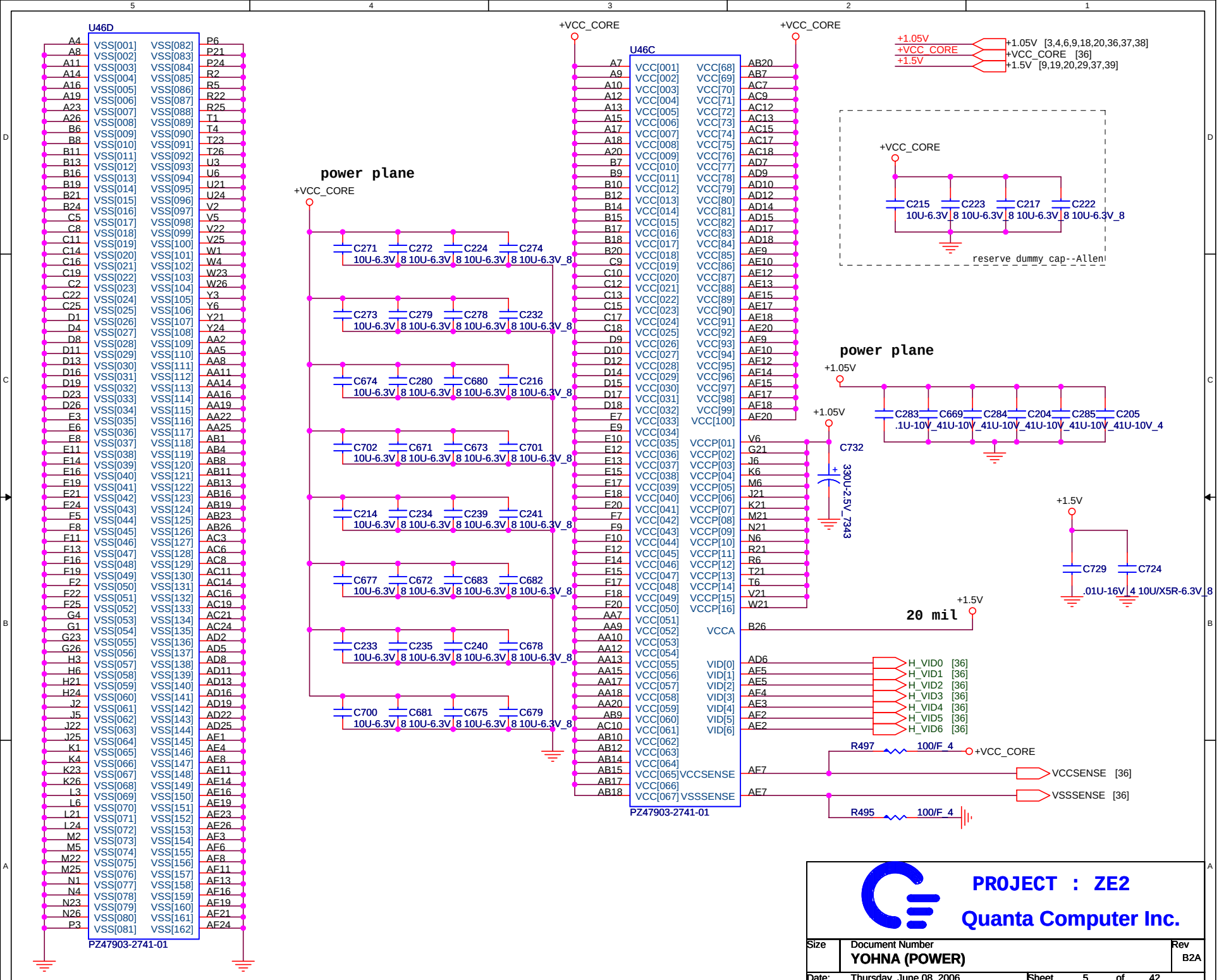
U46D
PZ47903-2741-01
U46C
PZ47903-2741-01
power plane
+VCC_CORE
C271 10U-6.3V_8
C272 10U-6.3V_8
C224 10U-6.3V_8
C274 10U-6.3V_8
C273 10U-6.3V_8
C279 10U-6.3V_8
C278 10U-6.3V_8
C232 10U-6.3V_8
C674 10U-6.3V_8
C280 10U-6.3V_8
C680 10U-6.3V_8
C216 10U-6.3V_8
C702 10U-6.3V_8
C671 10U-6.3V_8
C673 10U-6.3V_8
C701 10U-6.3V_8
C214 10U-6.3V_8
C234 10U-6.3V_8
C239 10U-6.3V_8
C241 10U-6.3V_8
C677 10U-6.3V_8
C672 10U-6.3V_8
C683 10U-6.3V_8
C682 10U-6.3V_8
C233 10U-6.3V_8
C235 10U-6.3V_8
C240 10U-6.3V_8
C678 10U-6.3V_8
C700 10U-6.3V_8
C681 10U-6.3V_8
C675 10U-6.3V_8
C679 10U-6.3V_8
+1.05V
+VCC_CORE
+1.5V
+1.05V [3,4,6,9,18,20,36,37,38]
+VCC_CORE [36]
+1.5V [9,19,20,29,37,39]
C215 10U-6.3V_8
C223 10U-6.3V_8
C217 10U-6.3V_8
C222 10U-6.3V_8
reserve dummy cap--Allen
power plane
+1.05V
C283 .1U-10V_4
C669 1U-10V_4
C284 1U-10V_4
C204 1U-10V_4
C285 1U-10V_4
C205 1U-10V_4
C732
330U-2.5V_7343
+1.5V
C729 .01U-16V_4
C724 10U/X5R-6.3V_8
20 mil
H_VID0 [36]
H_VID1 [36]
H_VID2 [36]
H_VID3 [36]
H_VID4 [36]
H_VID5 [36]
H_VID6 [36]
R497 100/F_4
R495 100/F_4
VCCSENSE [36]
VSSSENSE [36]
PROJECT : ZE2
Quanta Computer Inc.
Size
Document Number
YOHNA (POWER)
Rev
B2A
Date: Thursday, June 08, 2006
Sheet 5 of 42

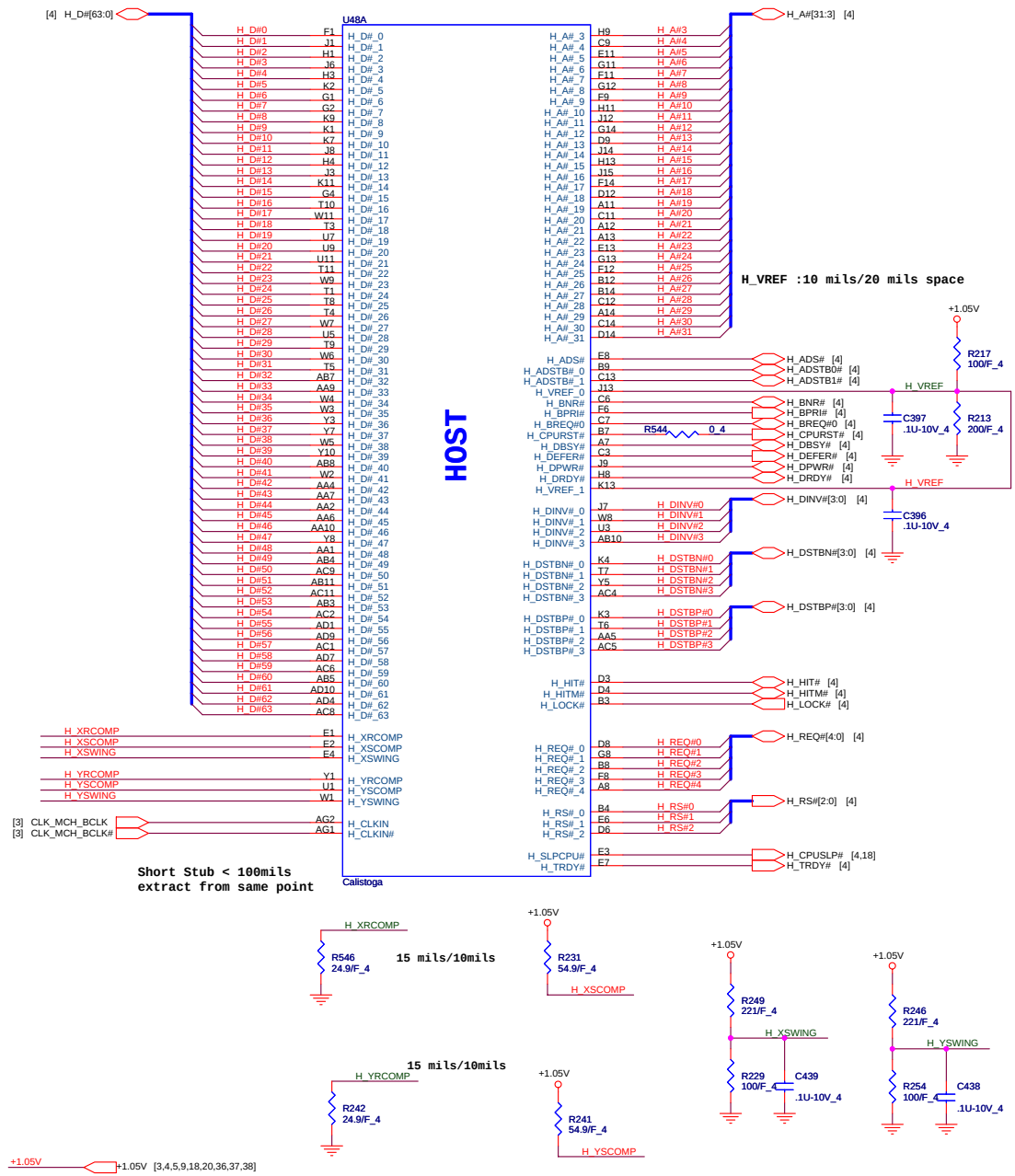

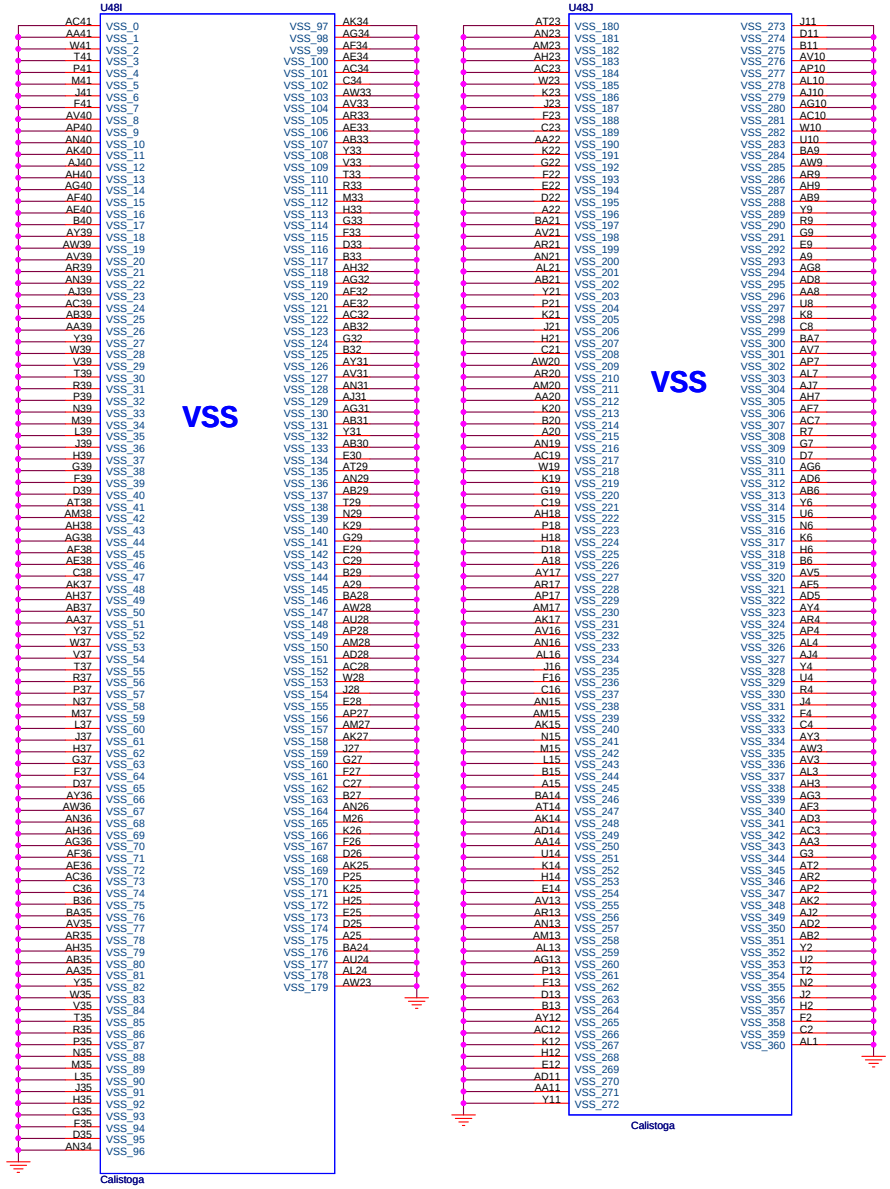

COMPONENTS	P/N
945PM	AJSL8Z40T51
945GM	AJSL8Z20T25
ICH7-M	AJSL8YB0T21

PROJECT : ZE2

Quanta Computer Inc.

Size	Document Number	Rev
	GMCH (HOST/GND)	B2A

Date: Thursday, June 08, 2006 Sheet 6 of 42

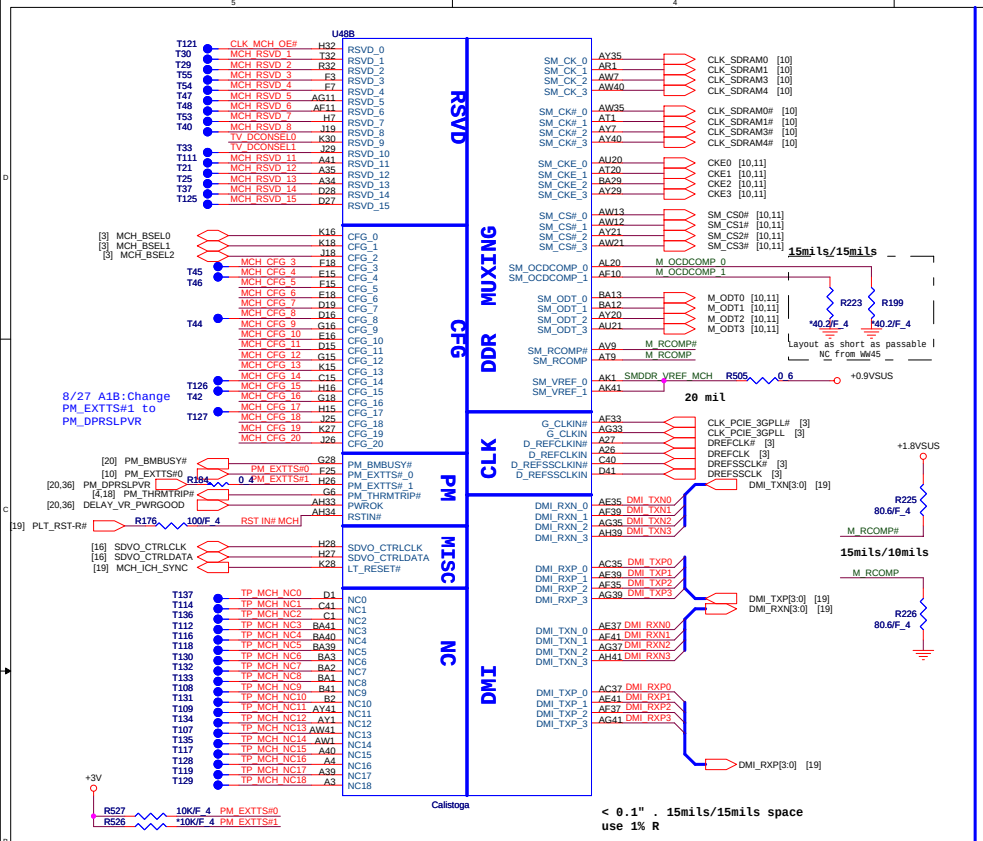

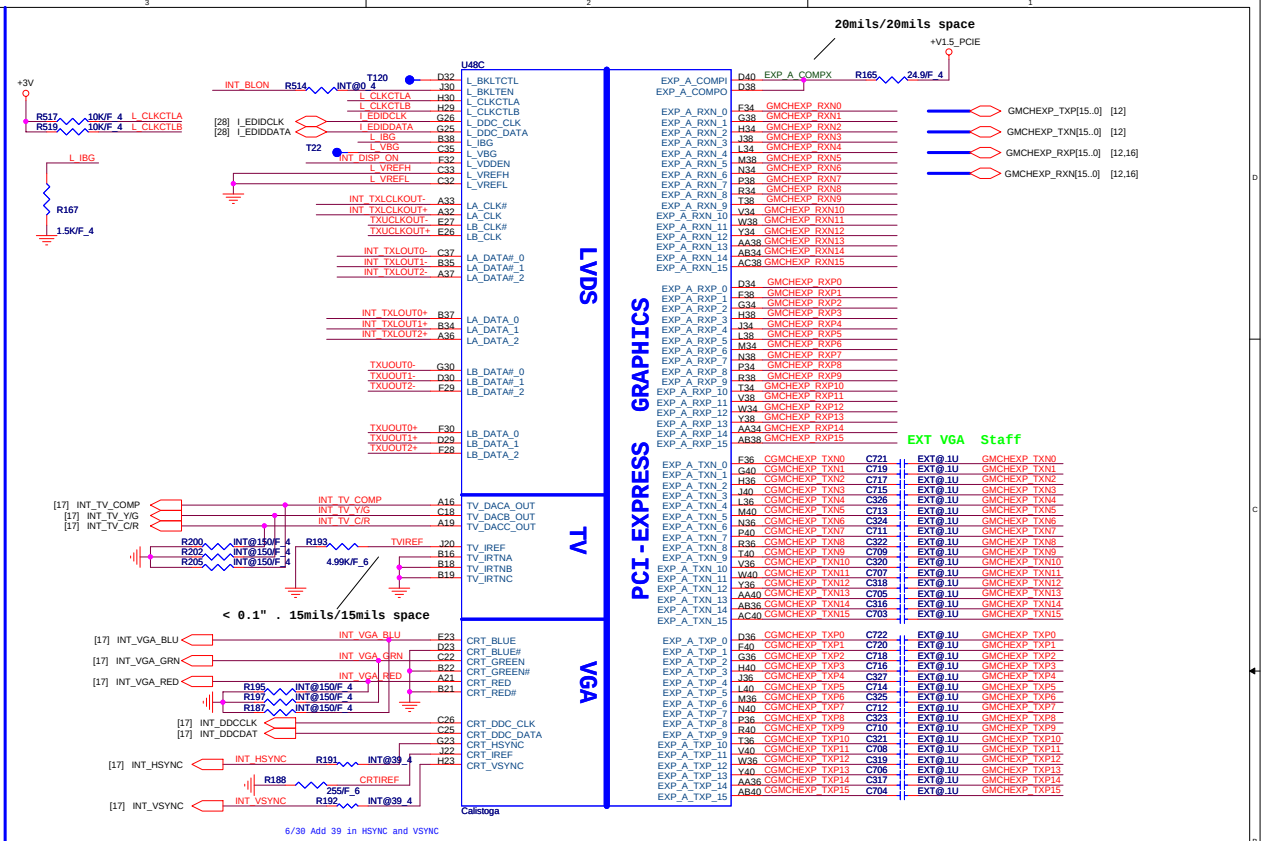

GMCH Strap pin

CFG[3..17] has internal PU
CFG[18..20] has internal PD

MCH_CFG_5 R539 *2.2K_4

MCH_CFG_5 DMI speed mode
Low = DMI X2
High=DMIX4

MCH_CFG_6 R207 *2.2K_4

MCH_CFG_6 DDR
Low =Moby Dick
High= Calistoga (Default)

MCH_CFG_7 R201 *2.2K_4

MCH_CFG_7 CPU Strap
Low=RSVD
High=Mobile CPU

MCH_CFG_9 R204 *2.2K_4

MCH_CFG_9 PCI Exp Graphics Lane
Low =Reserved
High=Normal

MCH_CFG_10 R536 *2.2K_4

MCH_CFG_10 Host PLL VCC Select
Low=Reserved
High=Mobility

MCH_CFG_11 R214 *2.2K_4

MCH_CFG_11 PSB 4x CLK ENABLE
Low=Reserved
High=Calistoga

MCH_CFG_12 R216 *2.2K_4

MCH_CFG_13 R206 *2.2K_4

MCH_CFG_12,13 XOR/ALLZ
0,0=Partial clock gating disable
0,1=All-Z mode enable
1,0=XOR mode enable
1,1=Normal

MCH_CFG_16 R530 *2.2K_4

MCH_CFG_16 FSB Dynmic ODT
Low=Dynamic ODT Disabled
High=Dynamic ODT Enabled.

MCH_CFG_18 R524 *1K/F_4 CFG_RSVD_0_R R525 *0_4 +3V

MCH_CFG_18 VCC Select
LOW=1.05V
High=1.5V

MCH_CFG_19 R523 *1K/F_4 +3V

MCH_CFG_19 DMI LANE Reversal
Low=Normal
High=LANES Reversed

MCH_CFG_20 R521 *1K/F_4 +3V

MCH_CFG_20 PCIE Backward interpoerability mode
Low= only SDVO or PCIE x1 is operational (defaults)

High=SDVO and PCIE x1 are operation simultaneously via the PEG port

LCD Internal and Extenal switch

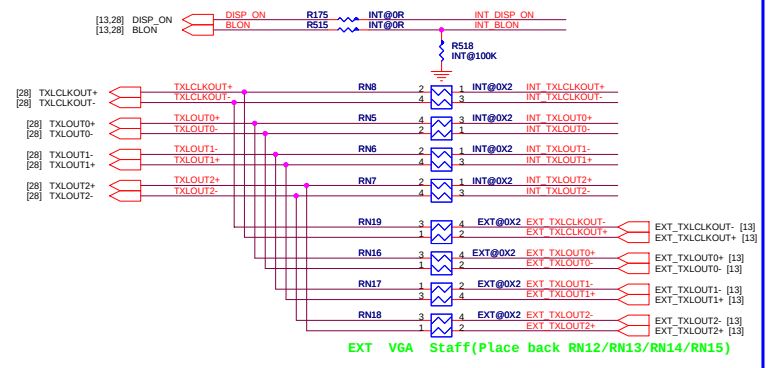

Internal DVO and PCIE switch

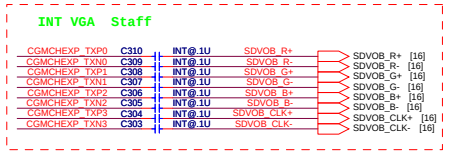

PROJECT : ZE2
Quanta Computer Inc.

Size	Document Number	Rev
	GMCH (DMI&PCIE&VGA)	B2A

Date: Thursday, June 08, 2006 Sheet 7 of 42

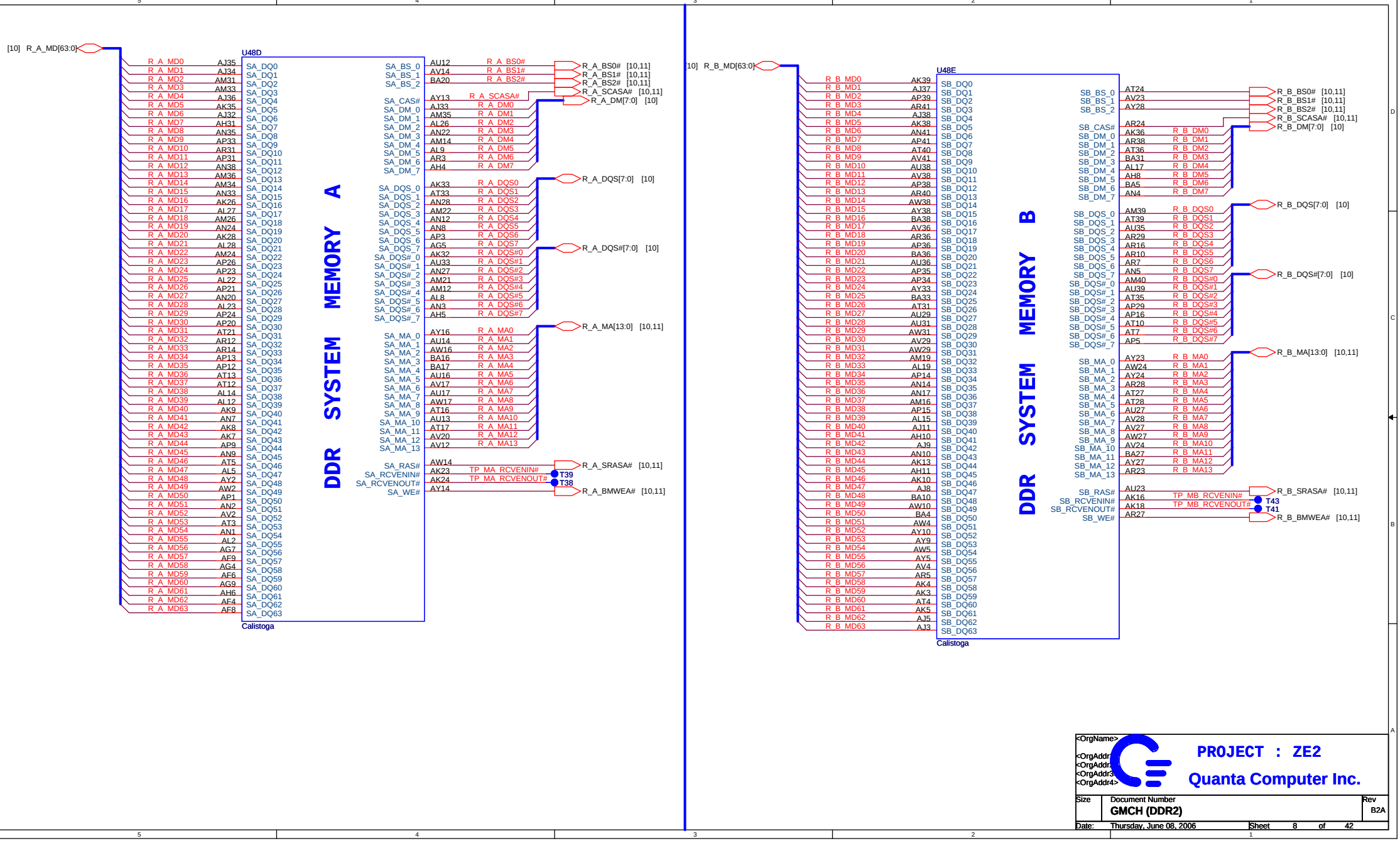

PROJECT : ZE1

Quanta Computer Inc.

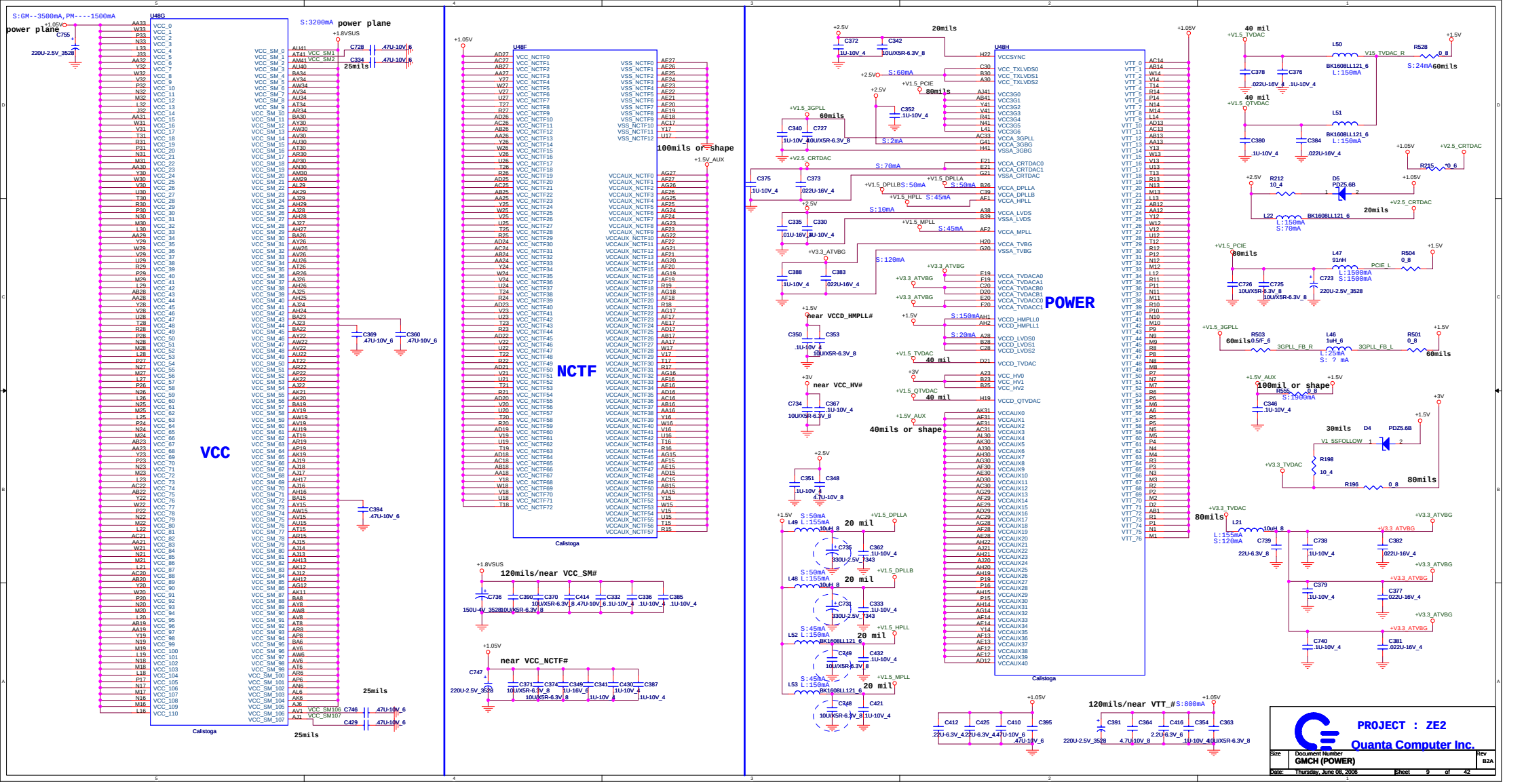
VCC
NCTF
POWER
Calistoga
PROJECT : ZE2
Quanta Computer Inc.
Size
Document Number
GMCH (POWER)
Rev
B2A
Date: Thursday, June 08, 2006
Sheet 9 of 42

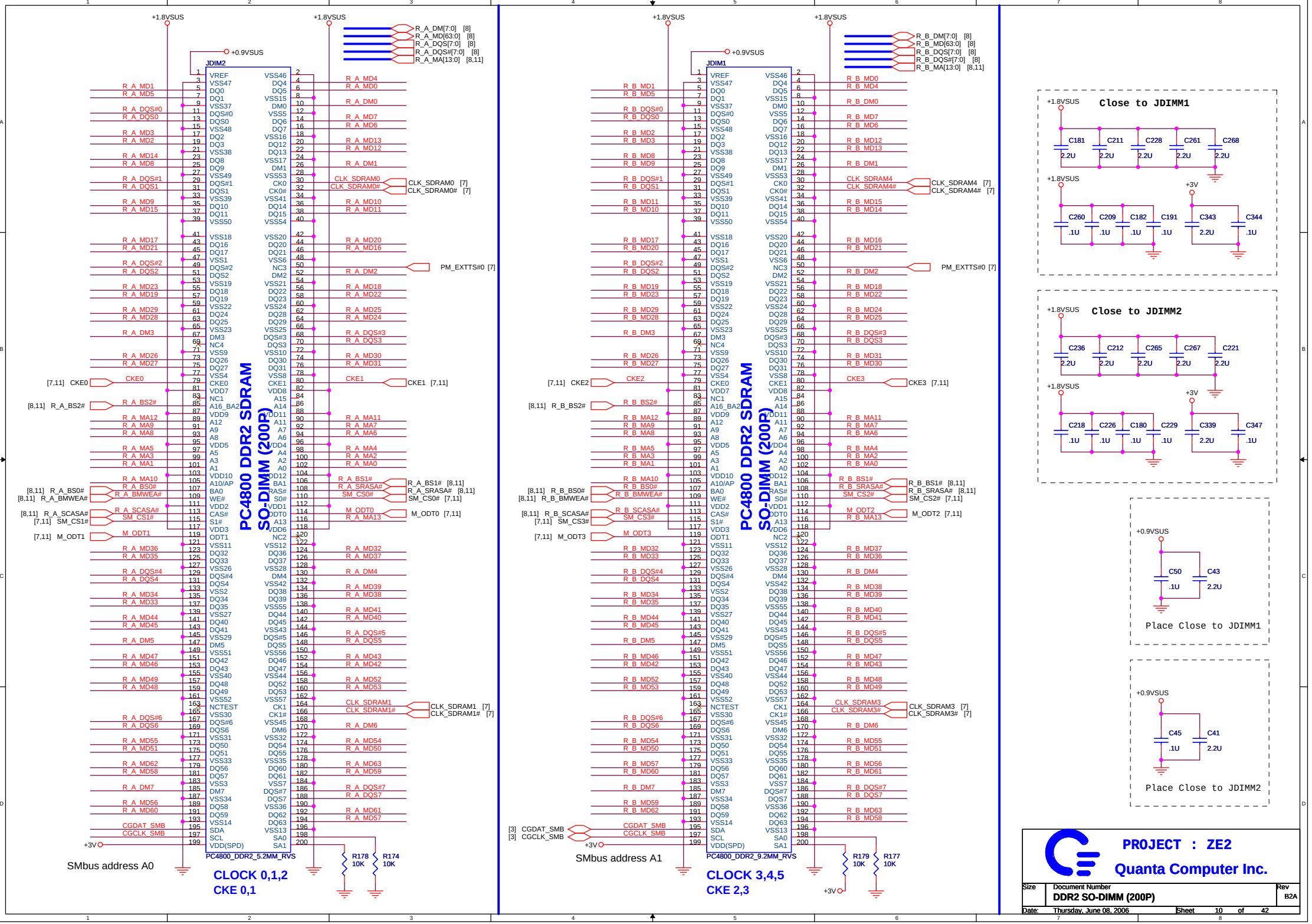
JDIM2
PC4800 DDR2 SDRAM
SO-DIMM (200P)
PC4800_DDR2_5.2MM_RVS
+1.8VSUS
+0.9VSUS
+3V
R_A_DM[7:0] [8]
R_A_MD[63:0] [8]
R_A_DQS[7:0] [8]
R_A_DQS#[7:0] [8]
R_A_MA[13:0] [8,11]
CLK_SDRAM0 [7]
CLK_SDRAM0# [7]
CLK_SDRAM1 [7]
CLK_SDRAM1# [7]
PM_EXTTS#0 [7]
[7,11] CKE0
CKE1 [7,11]
[8,11] R_A_BS2#
[8,11] R_A_BS0#
[8,11] R_A_BMWEA#
[8,11] R_A_SCASA#
[7,11] SM_CS1#
[7,11] M_ODT1
R_A_BS1# [8,11]
R_A_SRASA# [8,11]
SM_CS0# [7,11]
M_ODT0 [7,11]
CGDAT_SMB
CGCLK_SMB
R178 10K
R174 10K
SMbus address A0
CLOCK 0,1,2
CKE 0,1
JDIM1
PC4800 DDR2 SDRAM
SO-DIMM (200P)
PC4800_DDR2_9.2MM_RVS
R_B_DM[7:0] [8]
R_B_MD[63:0] [8]
R_B_DQS[7:0] [8]
R_B_DQS#[7:0] [8]
R_B_MA[13:0] [8,11]
CLK_SDRAM4 [7]
CLK_SDRAM4# [7]
CLK_SDRAM3 [7]
CLK_SDRAM3# [7]
[7,11] CKE2
CKE3 [7,11]
[8,11] R_B_BS2#
[8,11] R_B_BS0#
[8,11] R_B_BMWEA#
[8,11] R_B_SCASA#
[7,11] SM_CS3#
[7,11] M_ODT3
R_B_BS1# [8,11]
R_B_SRASA# [8,11]
SM_CS2# [7,11]
M_ODT2 [7,11]
[3] CGDAT_SMB
[3] CGCLK_SMB
R179 10K
R177 10K
SMbus address A1
CLOCK 3,4,5
CKE 2,3
Close to JDIMM1
C181 C211 C228 C261 C268
2.2U
C260 C209 C182 C191 C343 C344
.1U 2.2U
Close to JDIMM2
C236 C212 C265 C267 C221
2.2U
C218 C226 C180 C229 C339 C347
.1U 2.2U
C50 C43
.1U 2.2U
Place Close to JDIMM1
C45 C41
.1U 2.2U
Place Close to JDIMM2
PROJECT : ZE2
Quanta Computer Inc.
Size
Document Number
DDR2 SO-DIMM (200P)
Rev
B2A
Date: Thursday, June 08, 2006
Sheet 10 of 42

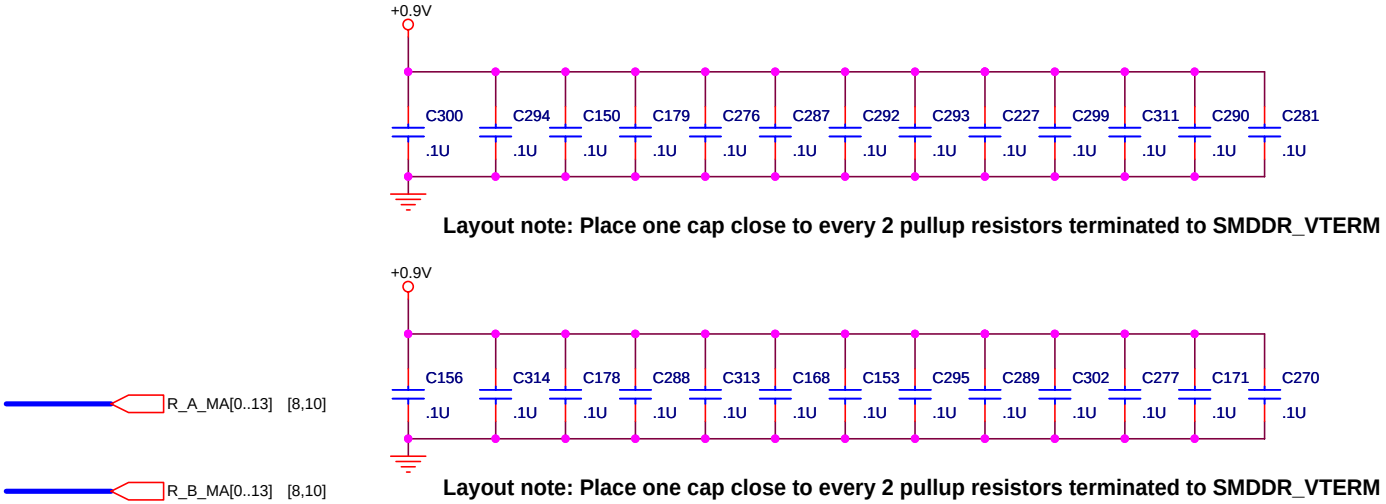

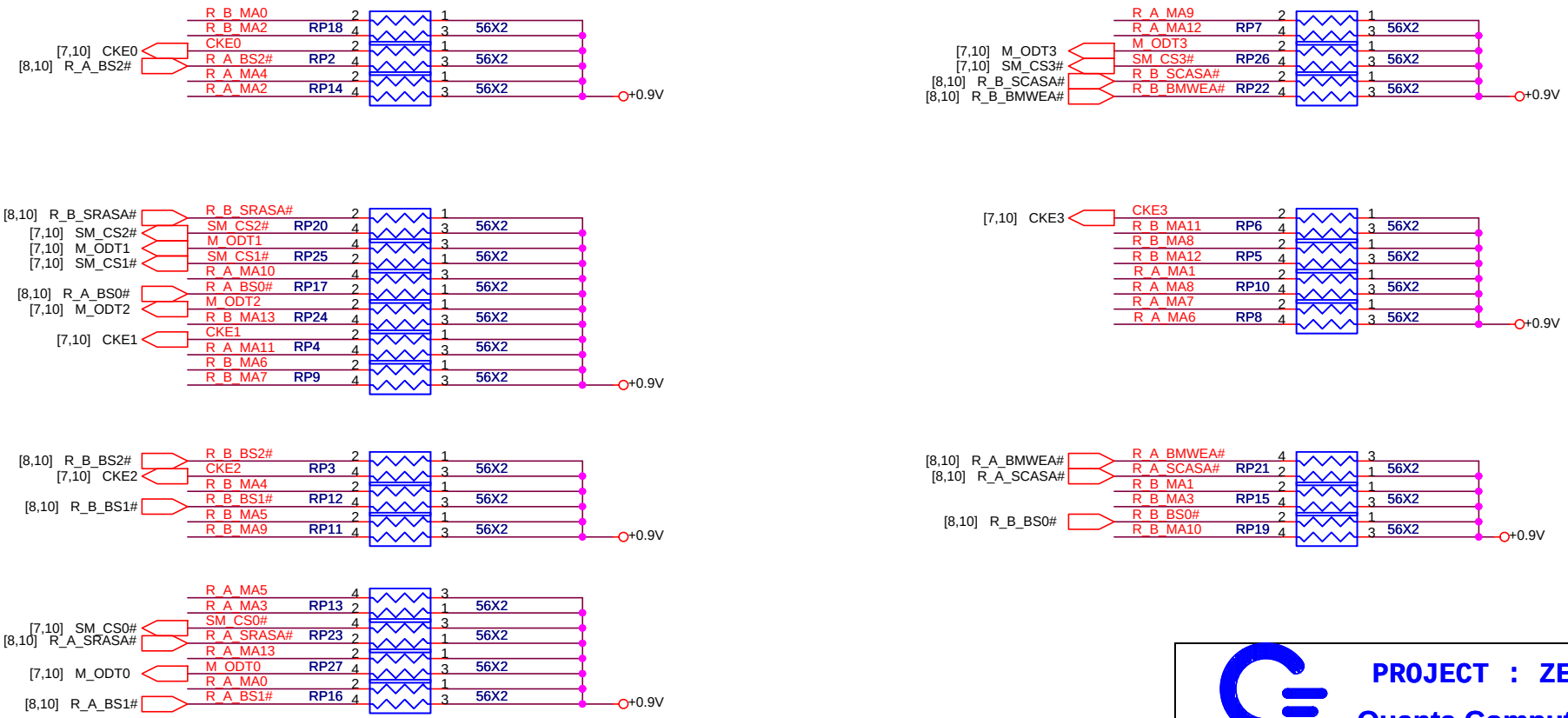

PROJECT : ZE2

Quanta Computer Inc.

Size	Document Number	Rev
	DDR2 RES. ARRAY	B2A

Date: Thursday, June 08, 2006 Sheet 11 of 42

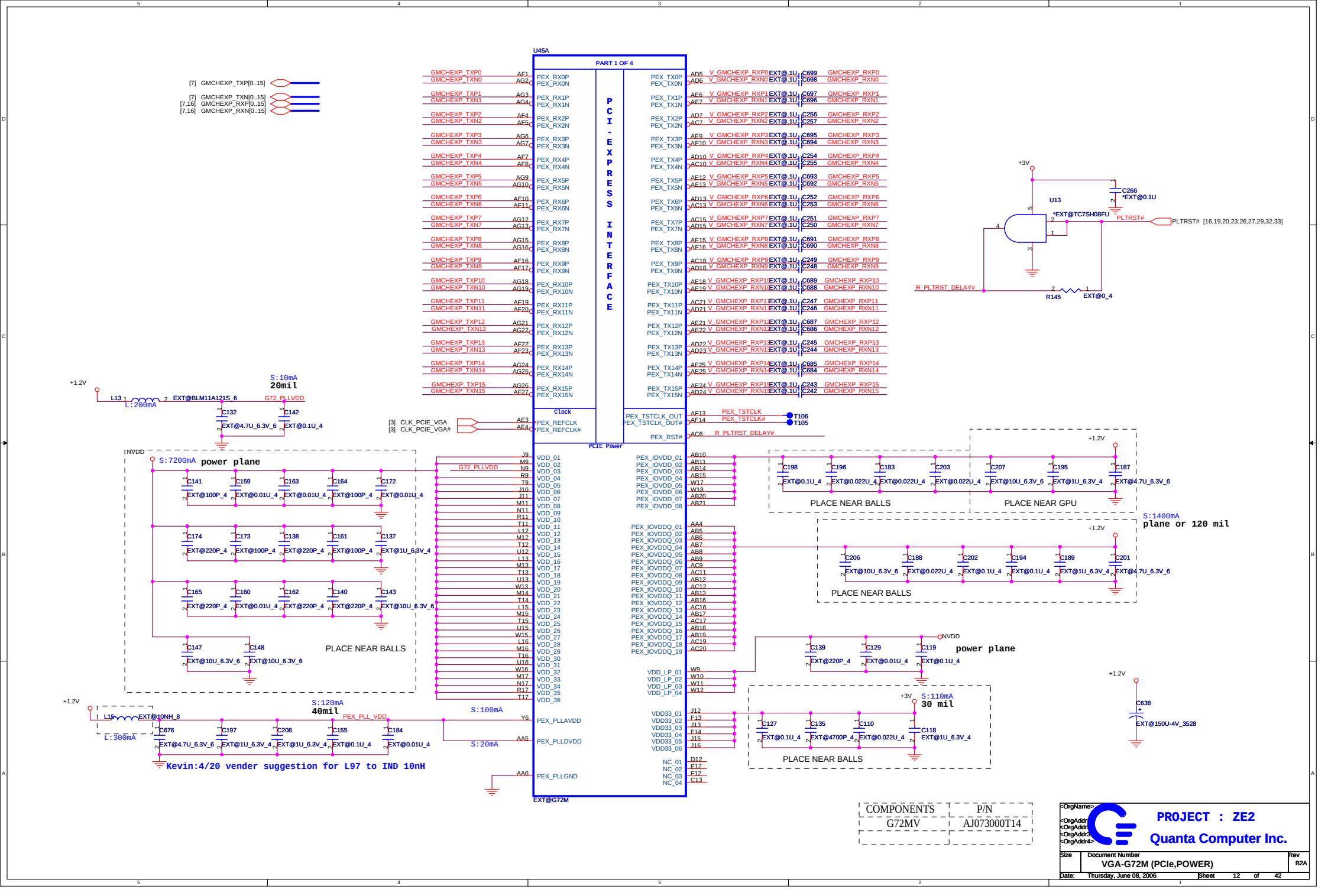

COMPONENTS	P/N
G72MV	AJ073000T14

<OrgName>
<OrgAddr1>
<OrgAddr2>
<OrgAddr3>
<OrgAddr4>
PROJECT : ZE2
Quanta Computer Inc.

Size	Document Number	Rev
	VGA-G72M (PCIe,POWER)	B2A

Date: Thursday, June 08, 2006 Sheet 12 of 42

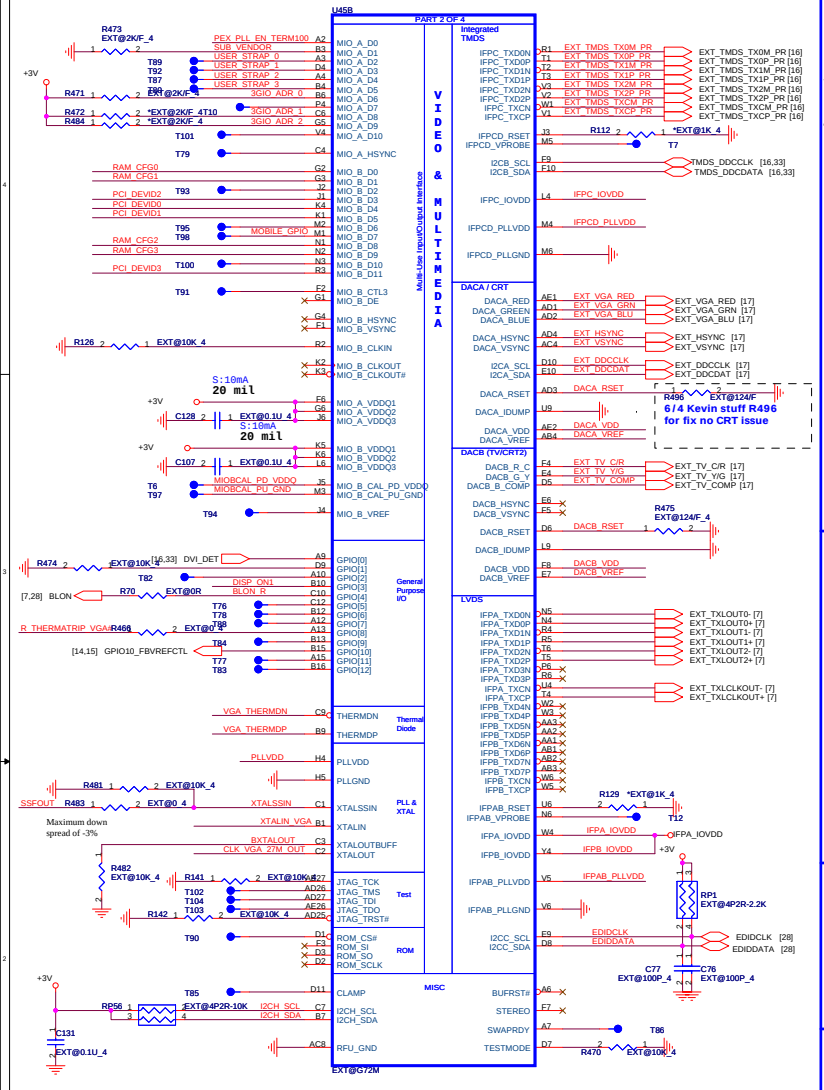

Strapping

PCI DEVICE

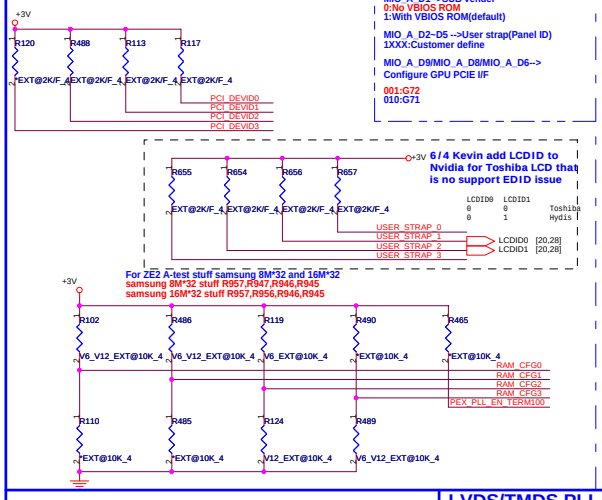

MIO_A_D0-->PCIE PLL termination enable
0:enable(default,internal PD)
1:disable

MIO_A_D1-->SUB vender
0:No VBIOS ROM
1:With VBIOS ROM(default)

MIO_A_D2~D5 -->User strap(Panel ID)
1XXX:Customer define

MIO_A_D9/MIO_A_D8/MIO_A_D6-->
Configure GPU PCIE I/F

001:G72
010:G71

MIO_A_D10/MIO_A_D7-->setting TV mode
00:SECAM
01:NTSC(default)
10:PAL
11:VGA

MIO_A_HSYNC-->Slot CLK CFG strap
0:GPU and NB does't share a common reference CLK
1:GPU and NB does share a common reference CLK(default)

MIO_B_D11/MIO_B_D3/MIO_B_D5/MIO_B_D4-->PCI device

PCI_DEVICE[3:0]	DESCRIPTION
1000	G72M
0111	G72M-V
others	Reserved

MIO_B_D7-->Mobile Mode
0:enable(default)
1:disable

MIO_B_VSYNC/MIO_B_D10-->ROM type
00:Parallel
01:Serial(default)
10:reserved
11:LPC

MIO_B_D9/MIO_B_D8/MIO_B_D1/MIO_B_D0-->RAM CFG
G72MV VRAM GDDR3 Configuration Table

RAM_CFG[3:0]	DESCRIPTION	Vendor
0000	Reserved	
0001	16Mx32 DDR3/64-bit	Infineon
0010	16Mx32 DDR3/64-bit	Hynix
0011	16Mx32 DDR3/64-bit	Samsung
0100	Reserved	
0101	8Mx32 DDR3/64bit	Infineon
0110	8Mx32 DDR3/64bit	Hynix
0111	8Mx32 DDR3/64bit	Samsung
1000	Reserved	
1001	16Mx32 DDR3/32bit	Infineon
1010	16Mx32 DDR3/32bit	Hynix
1011	16Mx32 DDR3/32bit	Samsung
1100	Reserved	
1101	8Mx32 DDR3/32bit	Infineon
1110	8Mx32 DDR3/32bit	Hynix
1111	8Mx32 DDR3/32bit	Samsung

MIO_B_D6/MIO_B_D2-->X'tal strap
00:13.5MHz
01:14.318MHz
10:27MHz(default)
11:reserved

DAC power

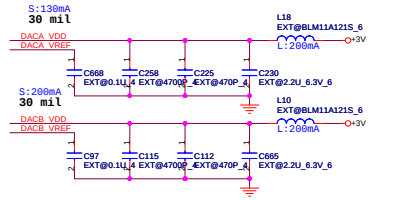

LVDS/TMDS PLL power

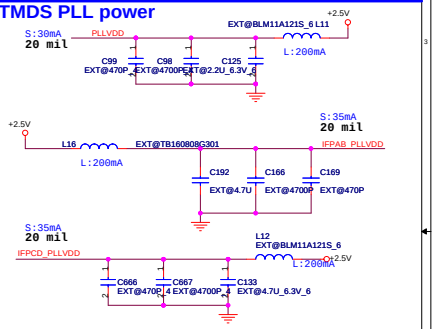

LVDS I/Opower

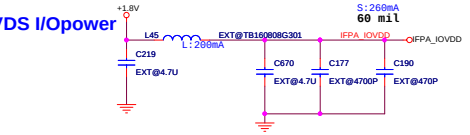

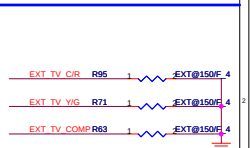

TMDS I/O power and backdrive circuit

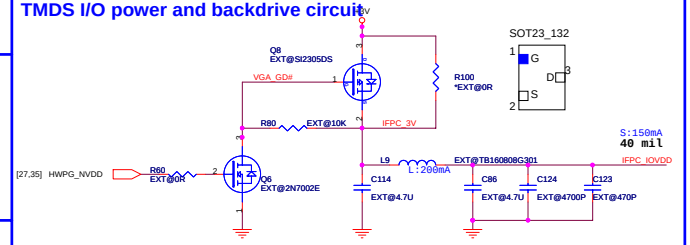

27M XTAL

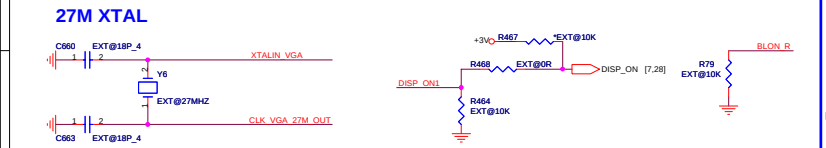

Thermal Sensor for Graphic

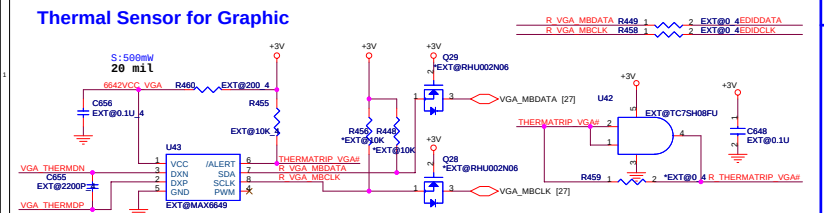

VGA SS

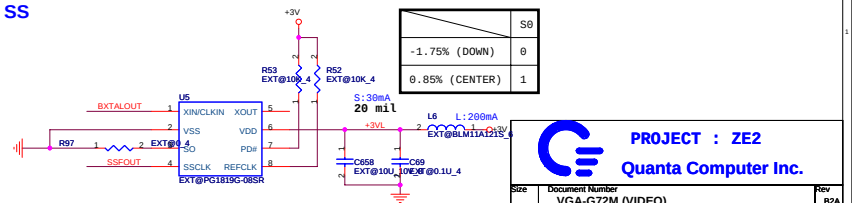

	S0
-1.75% (DOWN)	0
0.85% (CENTER)	1

PROJECT : ZE2

Quanta Computer Inc.

Size	Document Number	Rev
	VGA-G72M (VIDEO)	B2A

Date: Thursday, June 08, 2006 Sheet 13 of 42

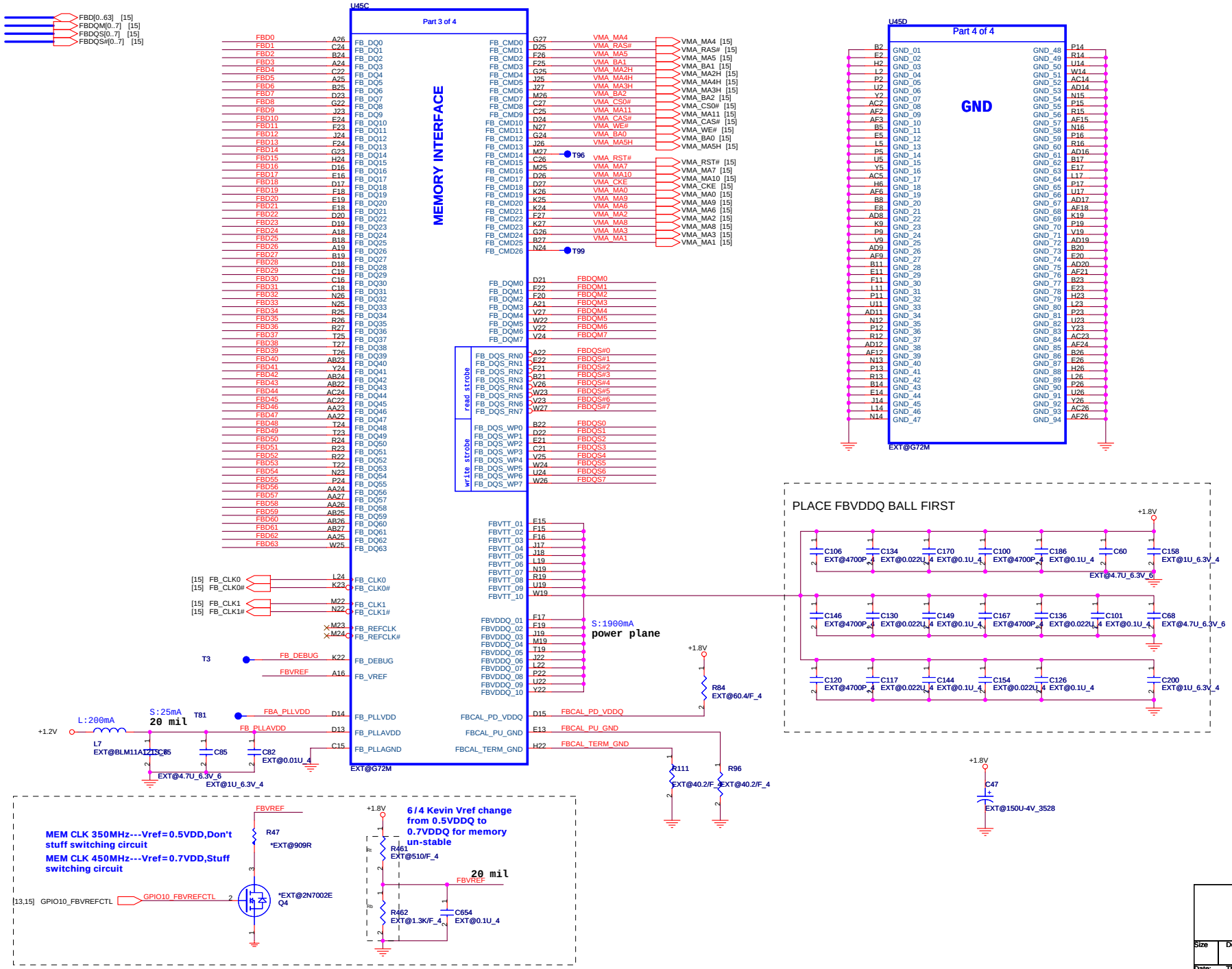

PROJECT : ZE2

Quanta Computer Inc.

Size	Document Number	Rev
	VGA-G72M (MEMORY,GUD)	B2A

Date: Thursday, June 08, 2006 Sheet 14 of 42

DDR3

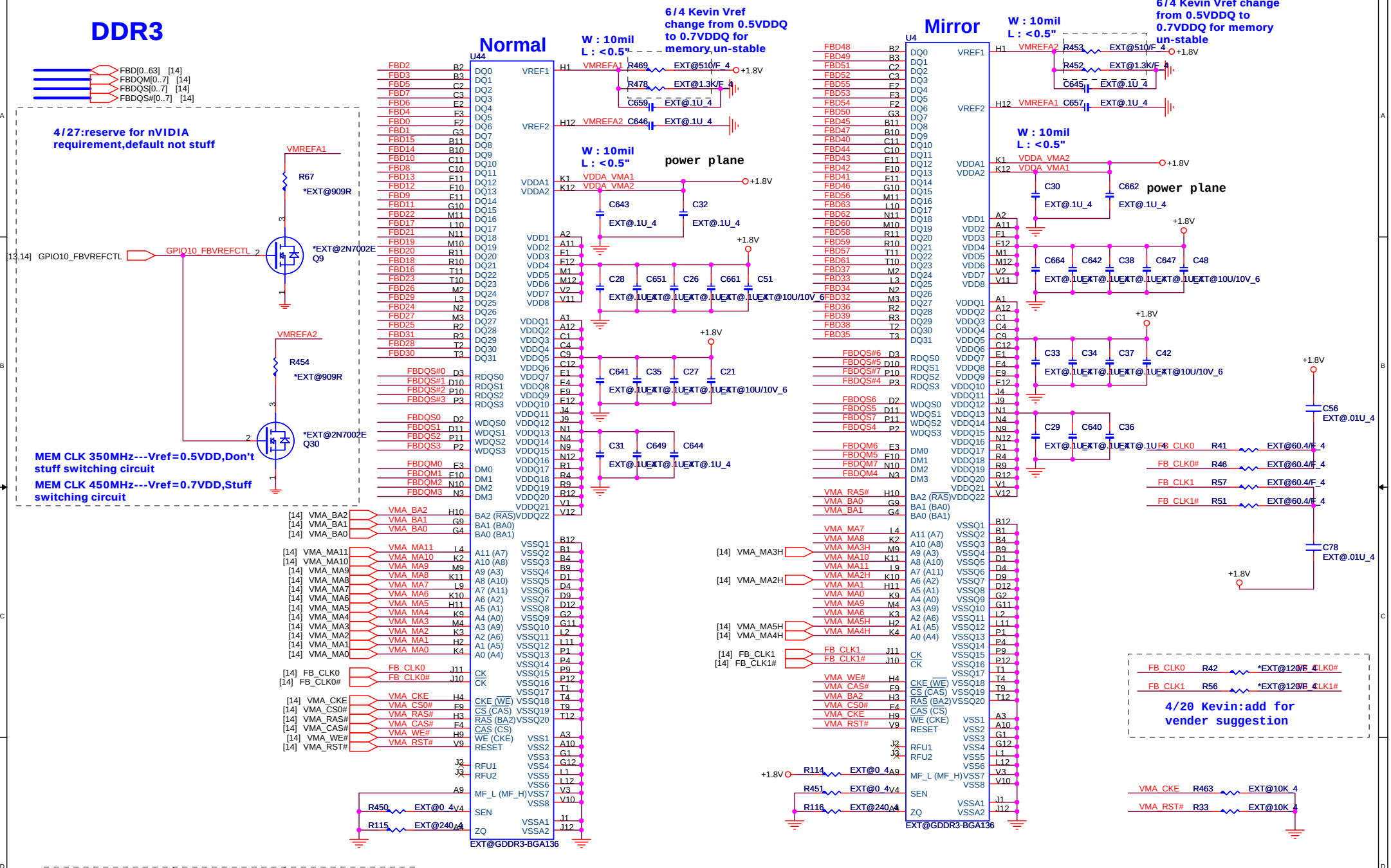

COMPONENTS	P/N	MEM CLK
Samsung 8M*32	AKD5JW-T503	500MHz
Samsung 16M*32	AKD5FW-T513	500MHz
Hynix 8M*32	AKD5JW-TW01	500MHz
Hynix 16M*32	AKD5FW-TW03	500MHz

PROJECT : ZE2

Quanta Computer Inc.

Size	Document Number	Rev
	VGA-G72M (VRAM)	B2A

Date: Thursday, June 08, 2006 Sheet 15 of 42

DVI control schematic(INT VGA USE)

INT VGA Staff

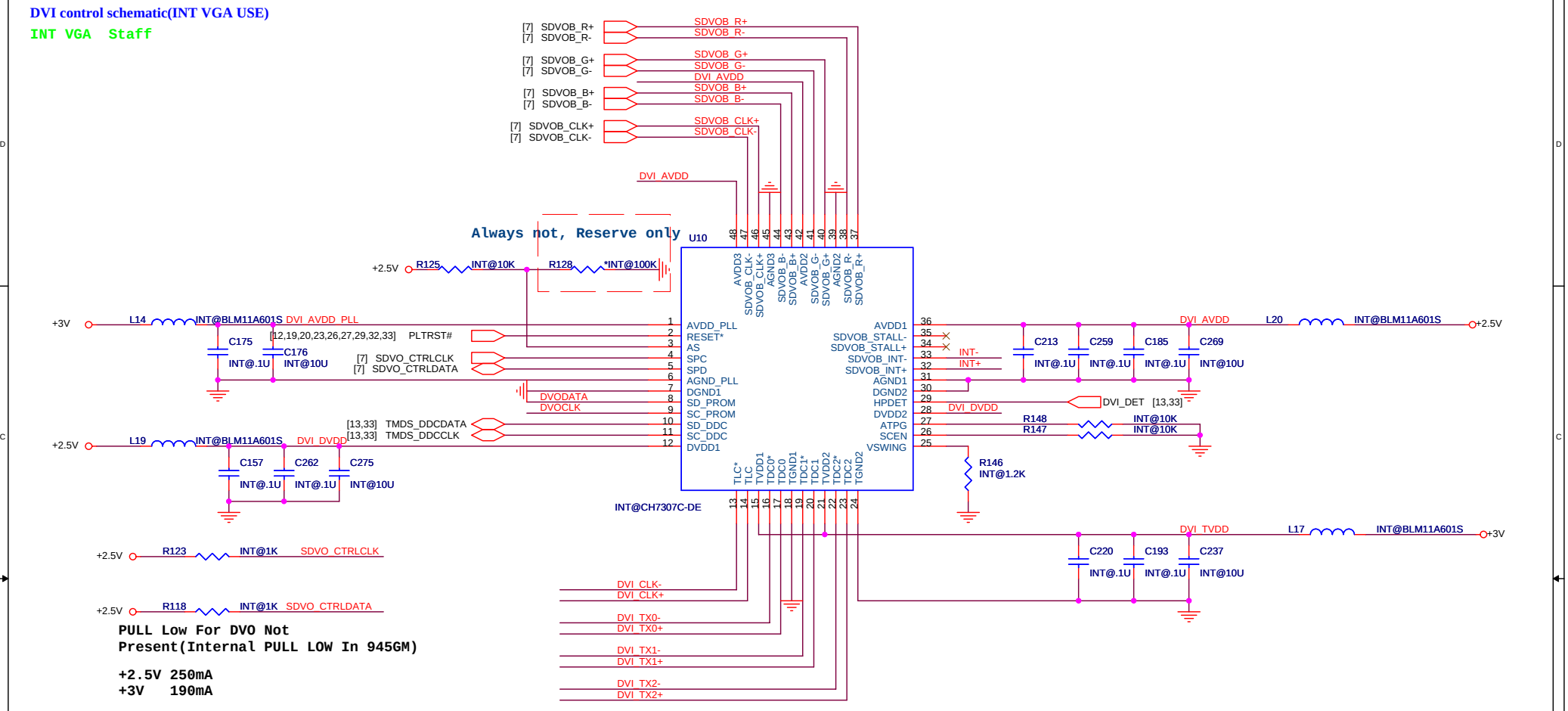

PULL Low For DVO Not Present(Internal PULL LOW In 945GM)

+2.5V 250mA
+3V 190mA

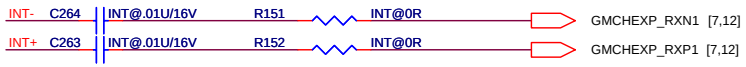

DVI Output select

INT VGA Staff

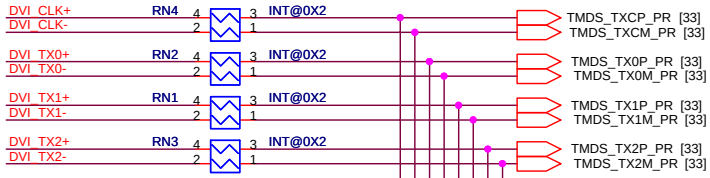

EXT VGA Staff(Default)

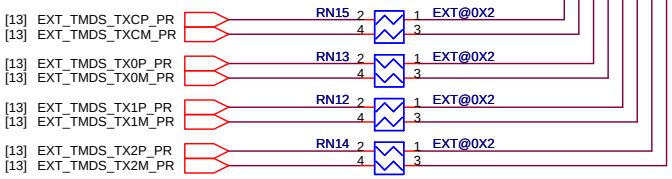

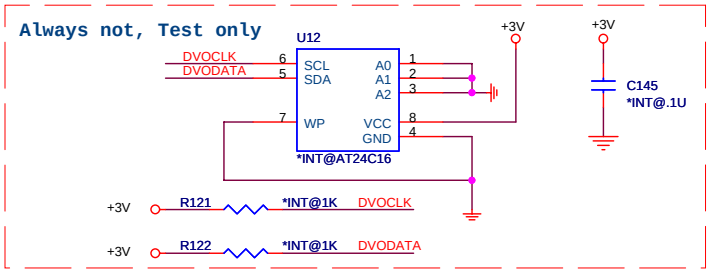

PROJECT : ZE2

Quanta Computer Inc.

Size	Document Number	Rev
	INT. DVI	B2A

Date: Thursday, June 08, 2006 Sheet 16 of 42

CRT CONN

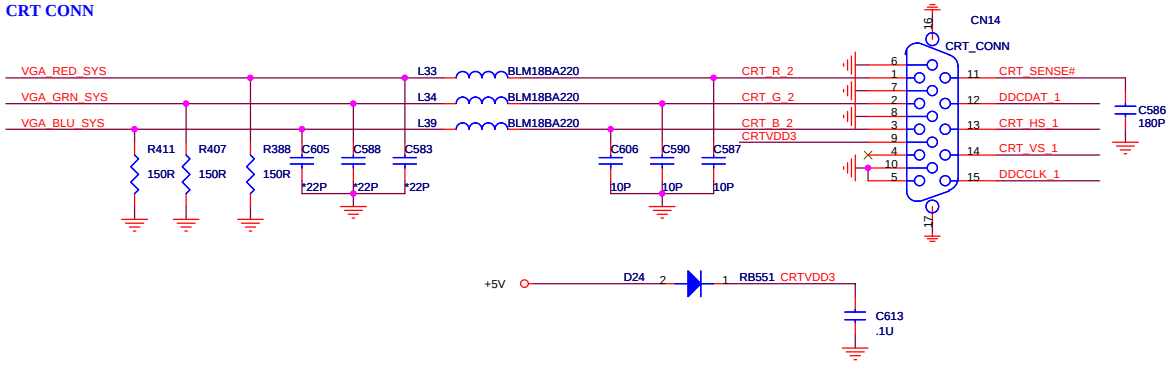

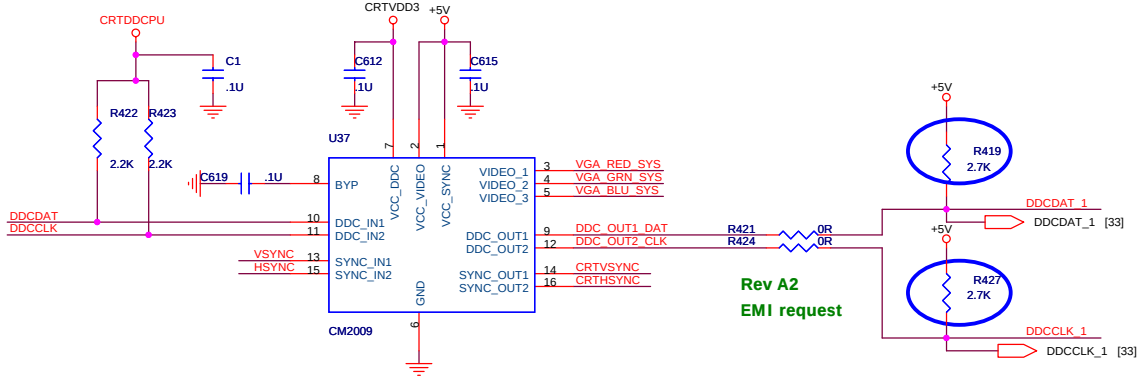

Rev A2

EMI request

SWITCH CIRCUIT

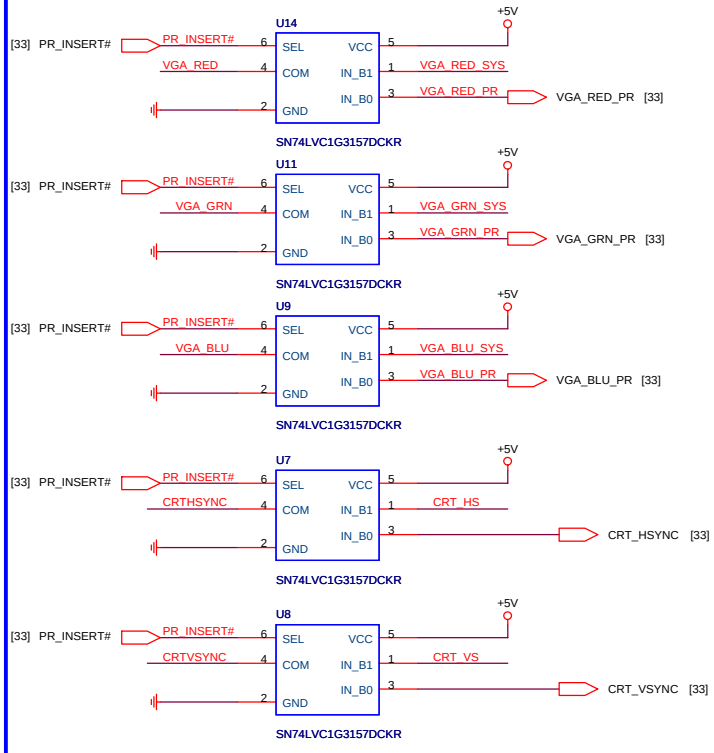

CRT Select

EXT VGA Staff(Default)

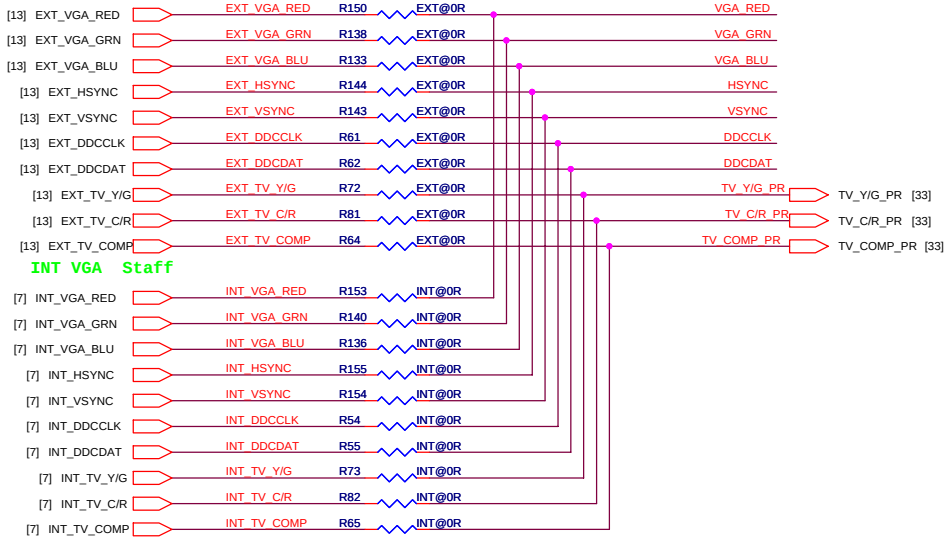

INT_VGA 2.5V,EXT_VGA 3.3V

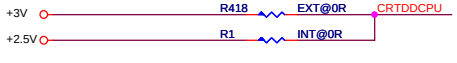

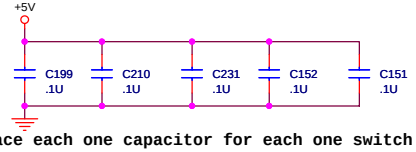

Place each one capacitor for each one switch

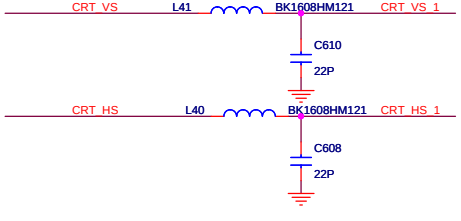

PROJECT : ZE2

Quanta Computer Inc.

Size	Document Number	Rev
	CRT & SWITCH	B2A

Date: Thursday, June 08, 2006 Sheet 17 of 42

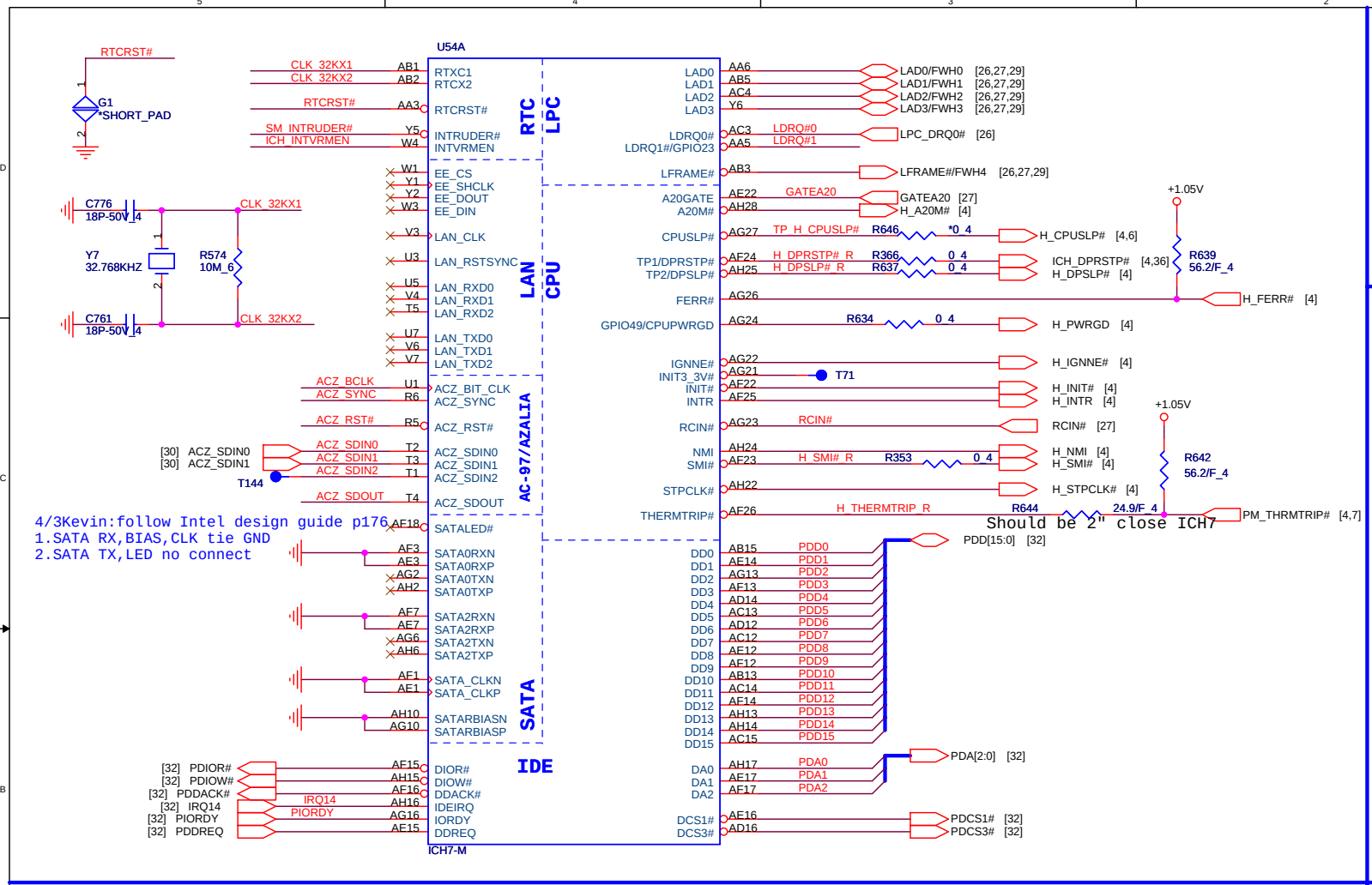

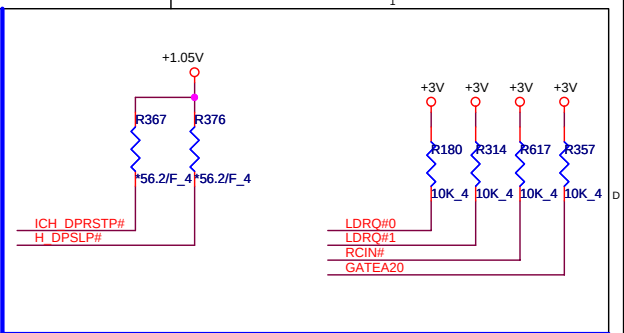

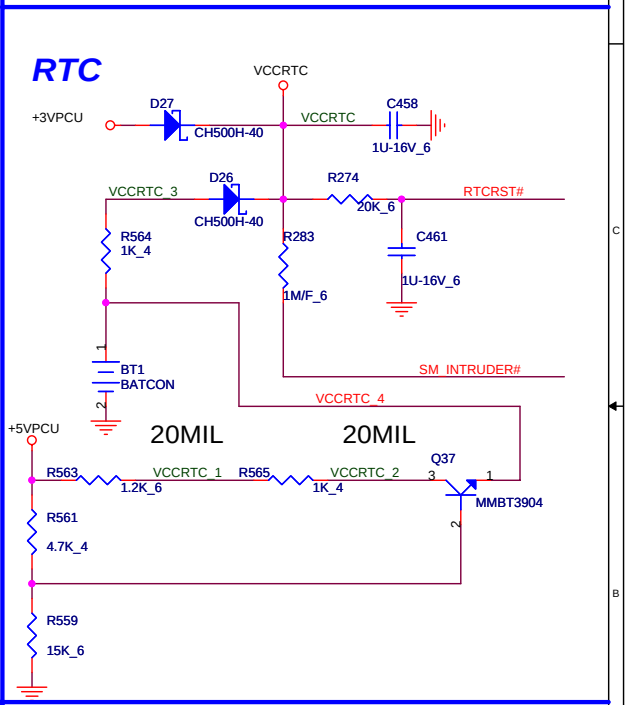

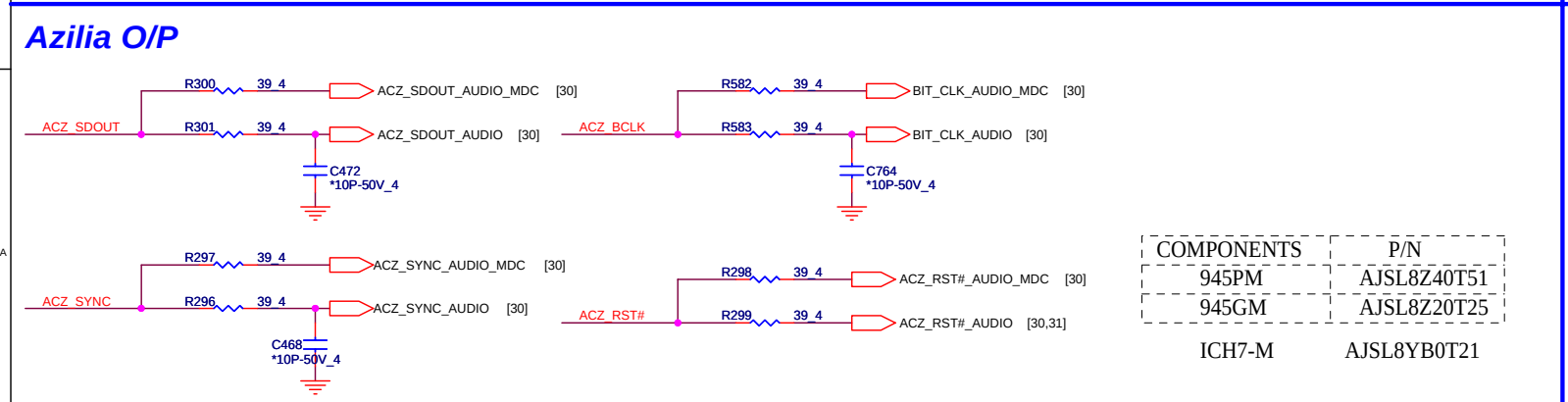

COMPONENTS	P/N
945PM	AJSL8Z40T51
945GM	AJSL8Z20T25
ICH7-M	AJSL8YB0T21

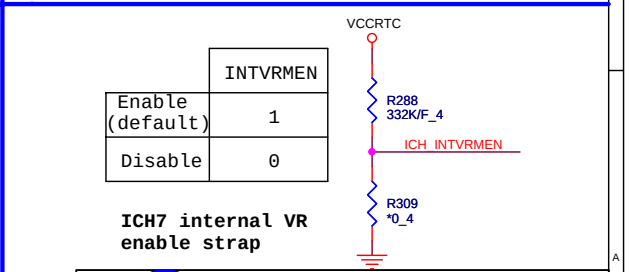

	INTVRMEN
Enable (default)	1
Disable	0

ICH7 internal VR enable strap

PROJECT : ZE2

Quanta Computer Inc.

Size	Document Number	Rev
	ICH7-M (CPU, SATA, IDE,LPC)	B2A

Date: Thursday, June 08, 2006 Sheet 18 of 42

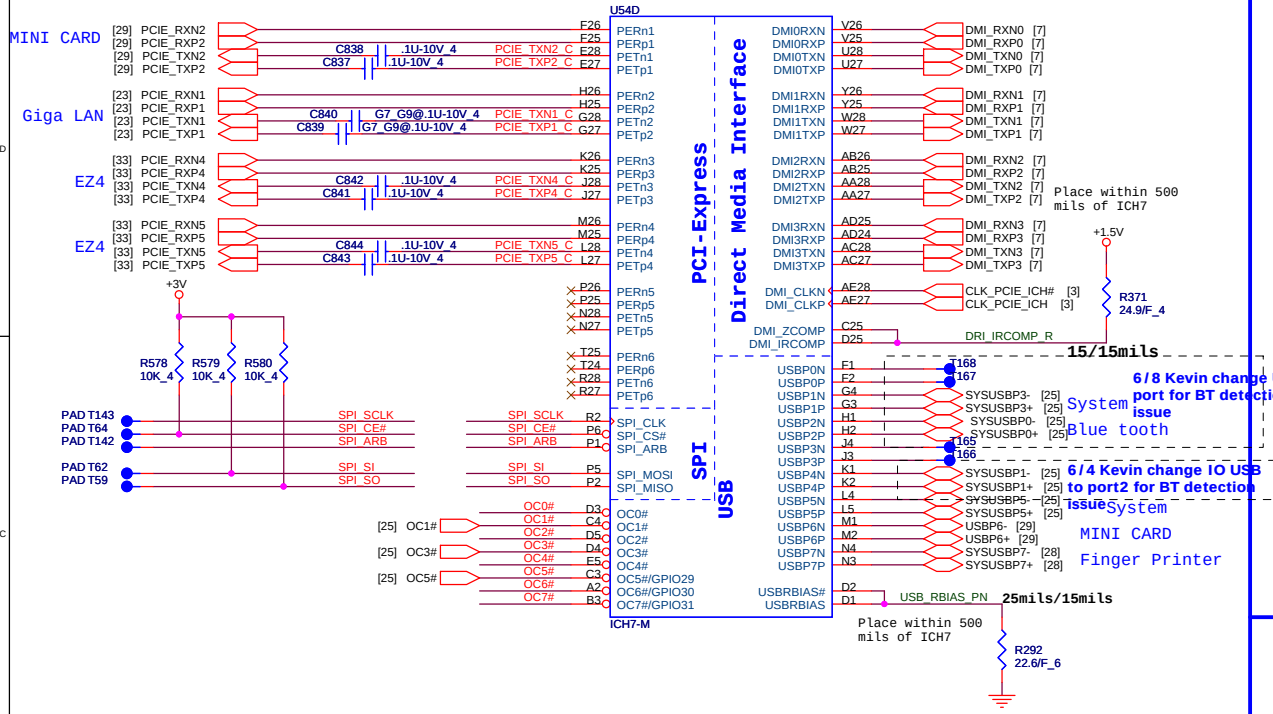

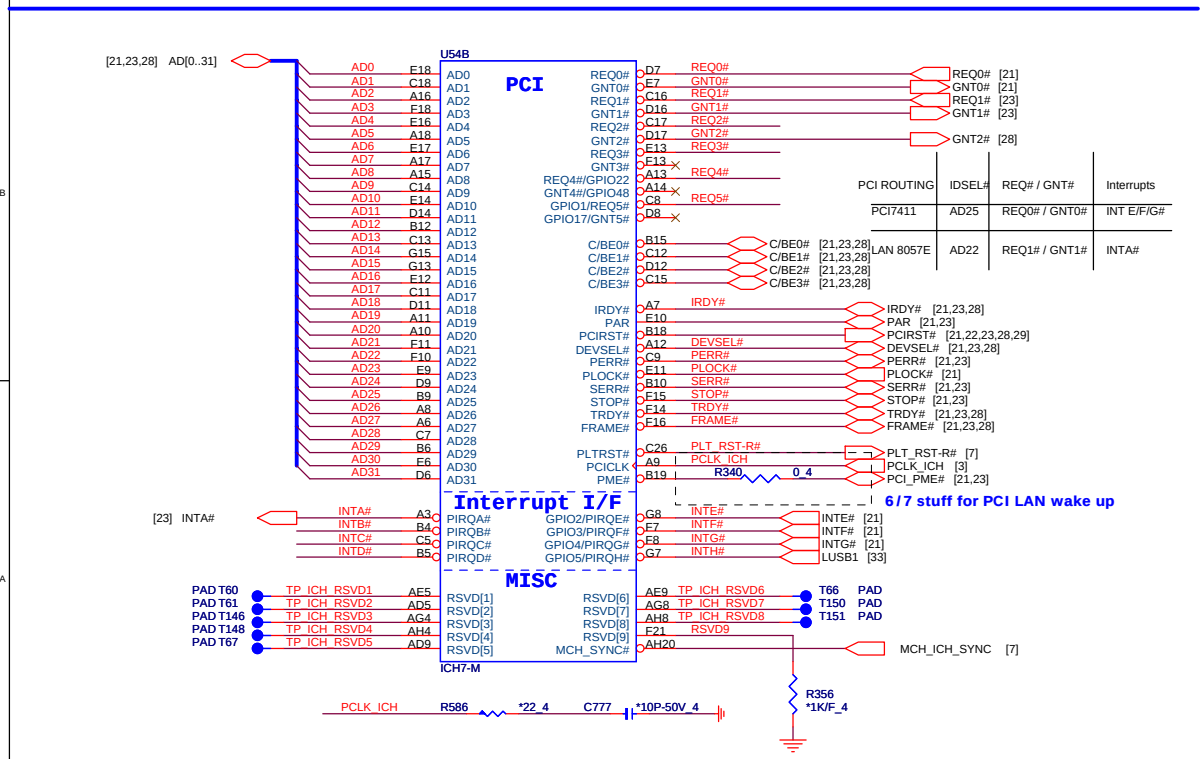

PCI ROUTING	IDSEL#	REQ# / GNT#	Interrupts
PCI7411	AD25	REQ0# / GNT0#	INT E/F/G#
LAN 8057E	AD22	REQ1# / GNT1#	INTA#

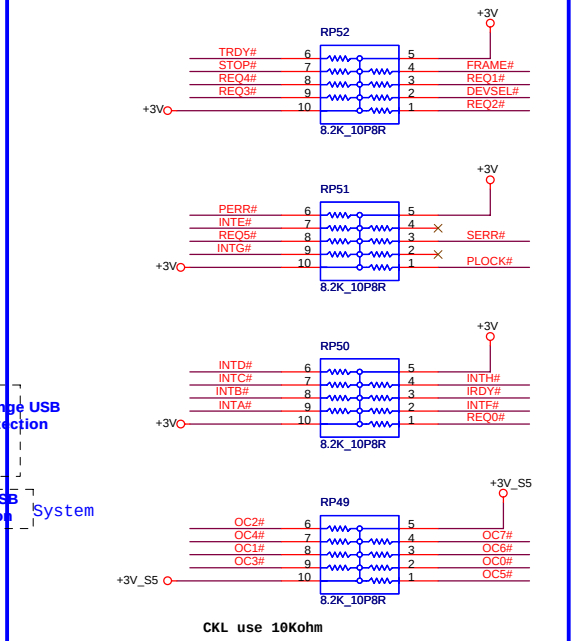

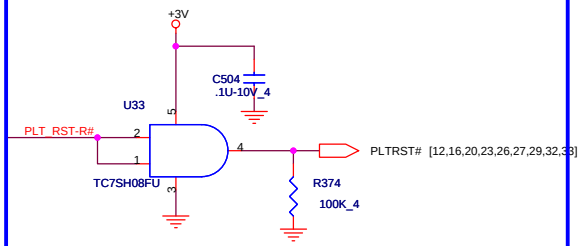

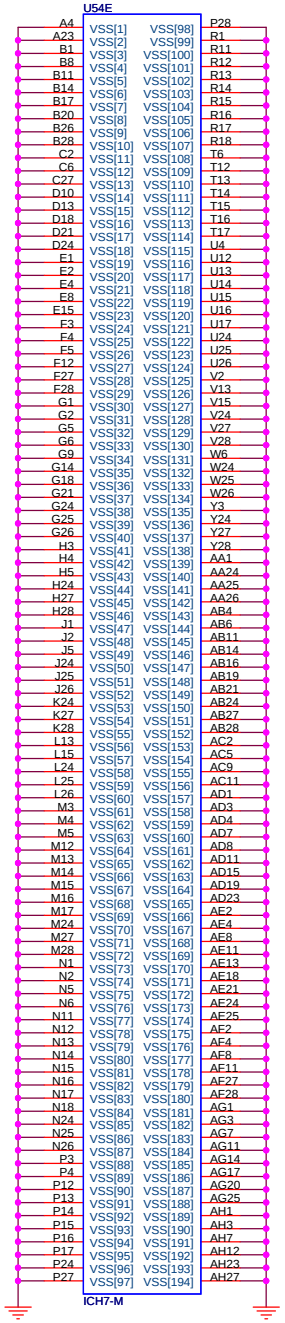

ICH7 Boot BIOS select

	STRAP	GNT5# R1	GNT4# R2
LPC (default)	11	UNSTUFF	UNSTUFF
PCI	10	UNSTUFF	STUFF
SPI	01	STUFF	UNSTUFF

PROJECT : ZE2

Quanta Computer Inc.

Size	Document Number	Rev
	ICH6-M (USB & DMI & PCIE & PCI)	B2A

Date: Thursday, June 08, 2006 Sheet 19 of 42

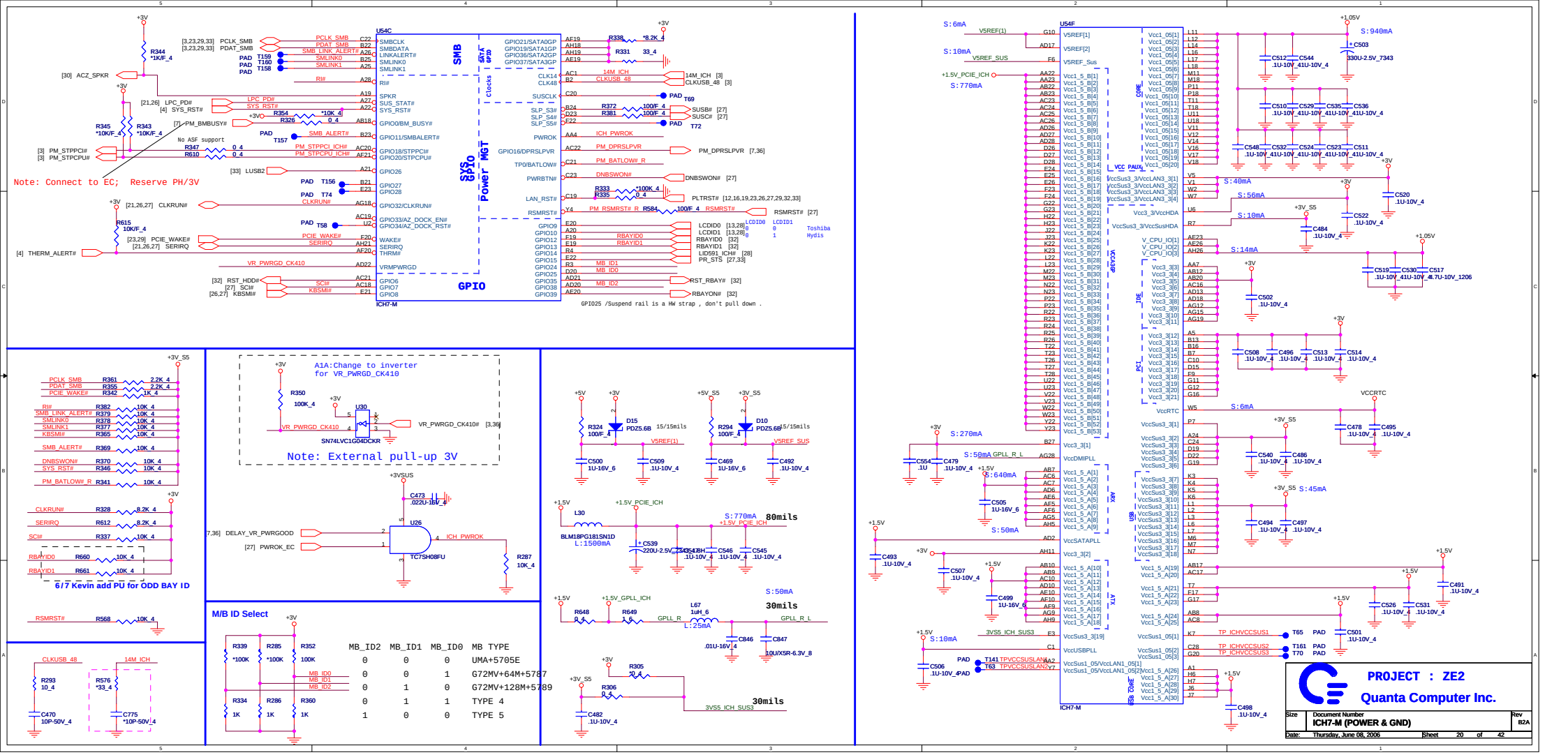
U54C
ICH7-M
SMB
GPIO
Power MGT
Note: Connect to EC; Reserve PH/3V
A1A:Change to inverter for VR_PWRGD_CK410
Note: External pull-up 3V
6/7 Kevin add PU for ODD BAY ID
M/B ID Select
MB_ID2 MB_ID1 MB_ID0 MB TYPE
0 0 0 UMA+5705E
0 0 1 G72MV+64M+5787
0 1 0 G72MV+128M+5789
0 1 1 TYPE 4
1 0 0 TYPE 5
GPIO25 /Suspend rail is a HW strap , don't pull down .
U54F
ICH7-M
PROJECT : ZE2
Quanta Computer Inc.
Document Number
ICH7-M (POWER & GND)
Size
Rev
BZA
Date: Thursday, June 08, 2006
Sheet 20 of 42

7411 PCI Interface

PCI routing REQ0#/GNT0#/AD25/INTE#,INTF#,INTG#

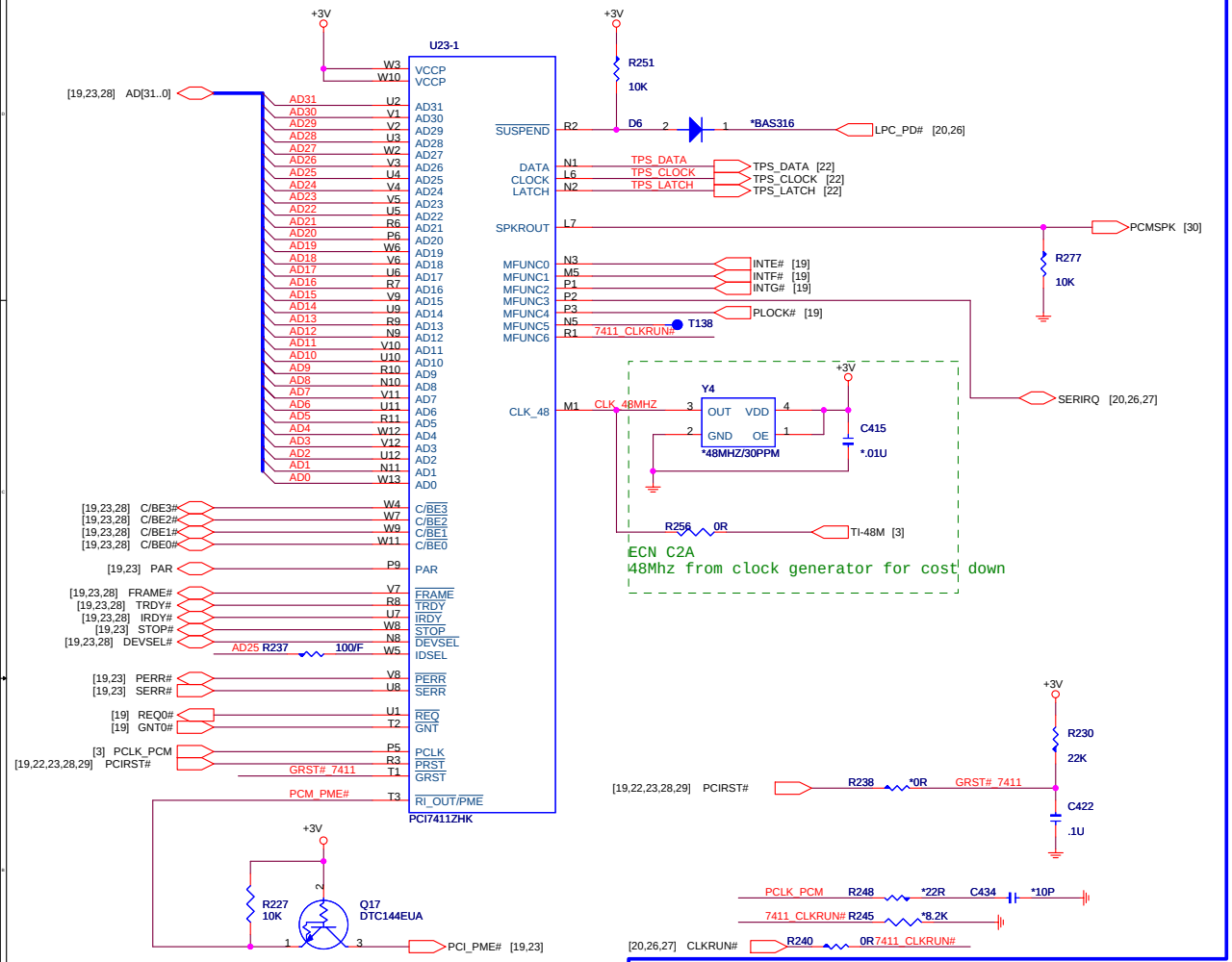

1394 Interface(CONN/EEPROM)

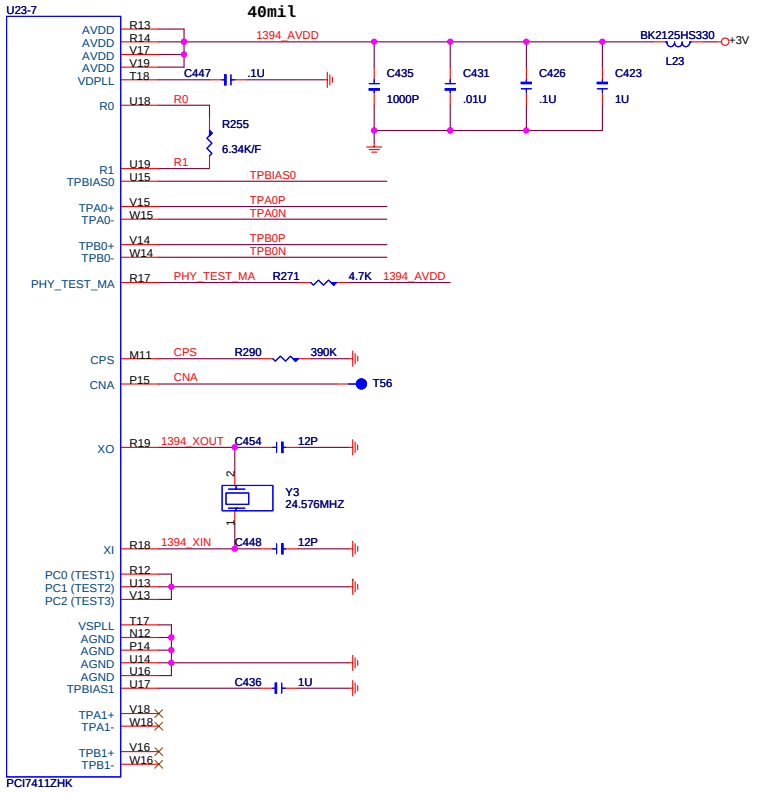

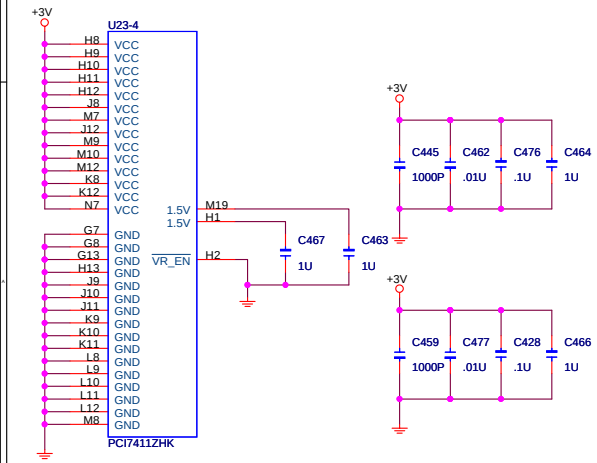

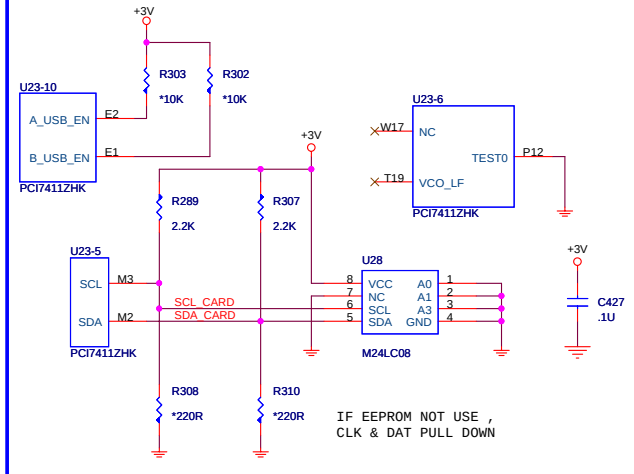

<OrgName> <OrgAddr1> <OrgAddr2> <OrgAddr3> <OrgAddr4>	PROJECT : ZE2 Quanta Computer Inc.	
Size	Document Number PCMCIA CONTROLLER & 1394	Rev B2A
Date: Thursday, June 08, 2006	Sheet 21 of 42	

Cardbus Interface

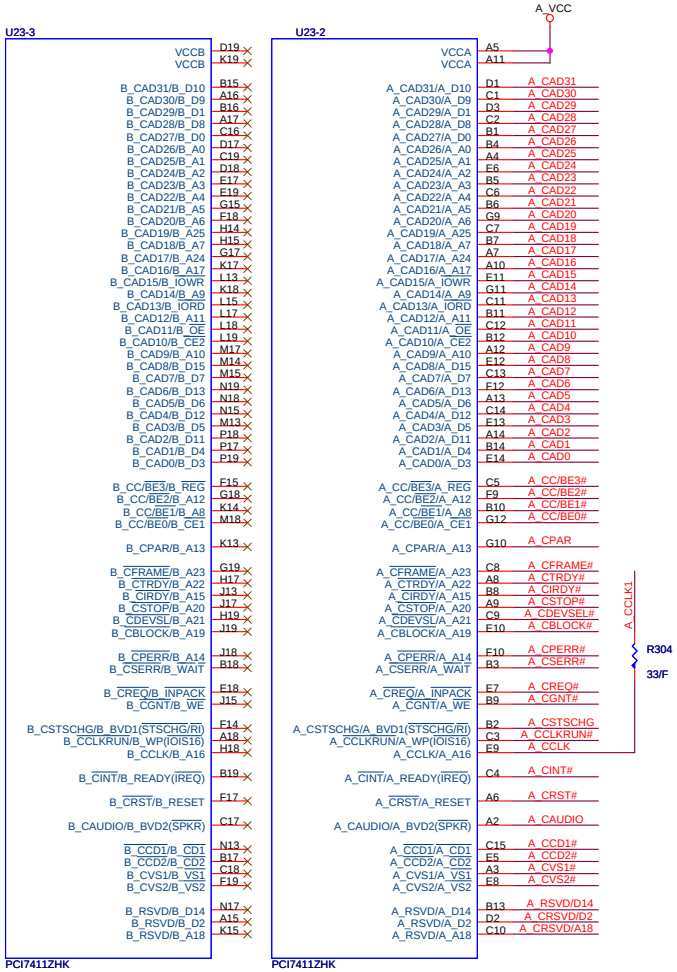

Cardbus connect(Board to Board connect)

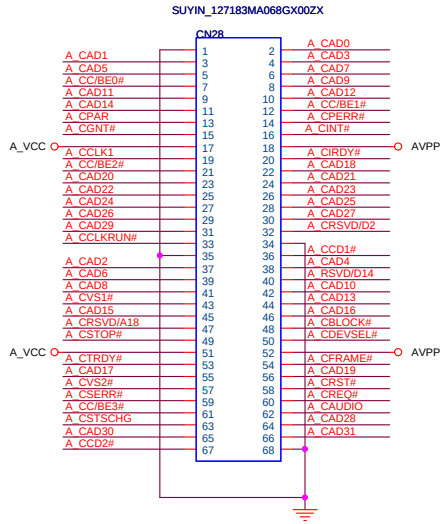

Card Reader Interface

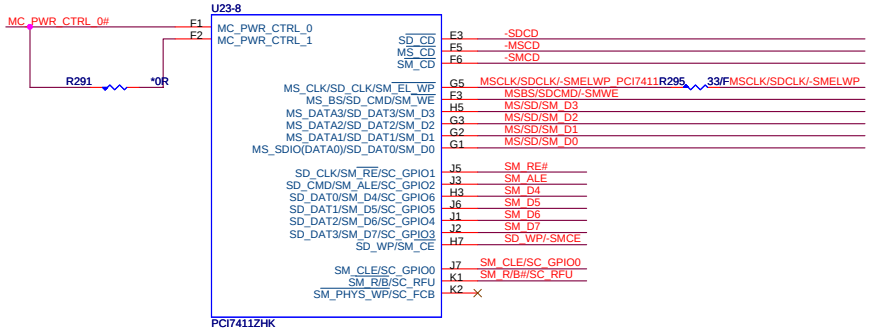

3 IN 1 CARD READER(SD/MMC/MS/MS Pro)

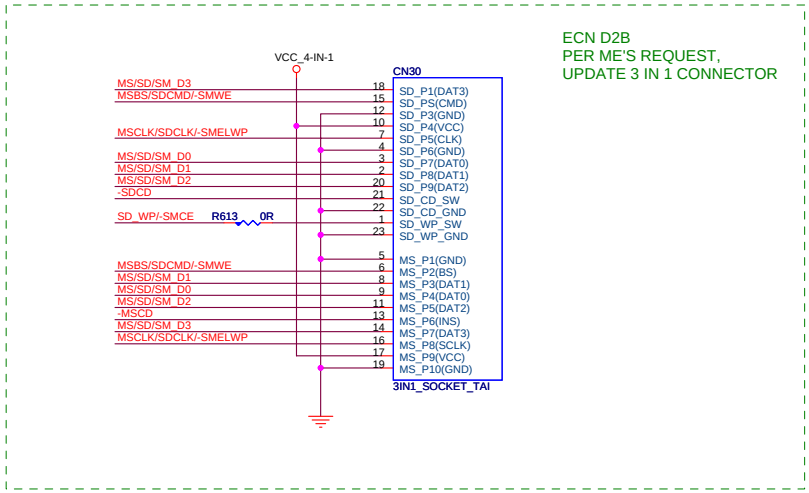

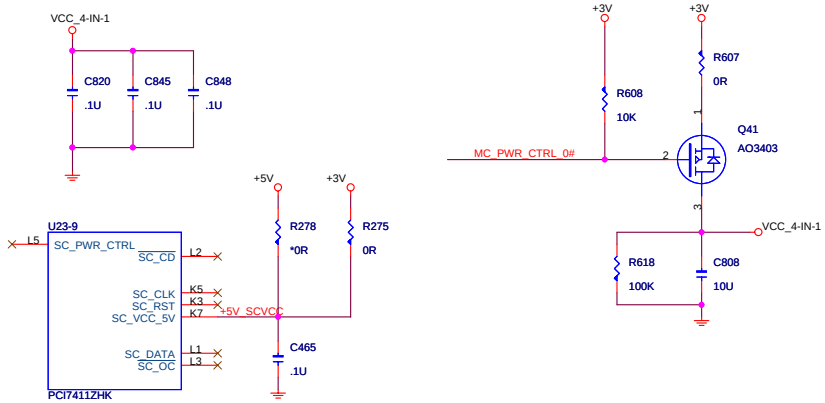

Cardbus Power

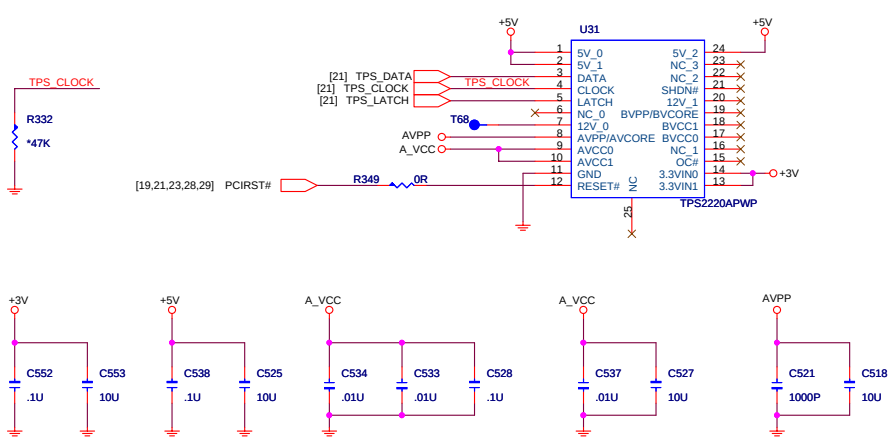

Size	Document Number	Rev
	PCMCIA & 4 IN 1	D2B

PROJECT : ZE2

Quanta Computer Inc.

Date: Thursday, June 08, 2006 Sheet 22 of 42

G5@ 5705E
G7@ 5787
G9@ 5789

PCI routing REQ1#/GNT1#/AD22/INTA#

COMPONENTS	P/N
5705E	AJ057050T70
5787M	AJ057870T00
5789 C1 version	AJ057890T19
5789 B1 version	AJ057890T01

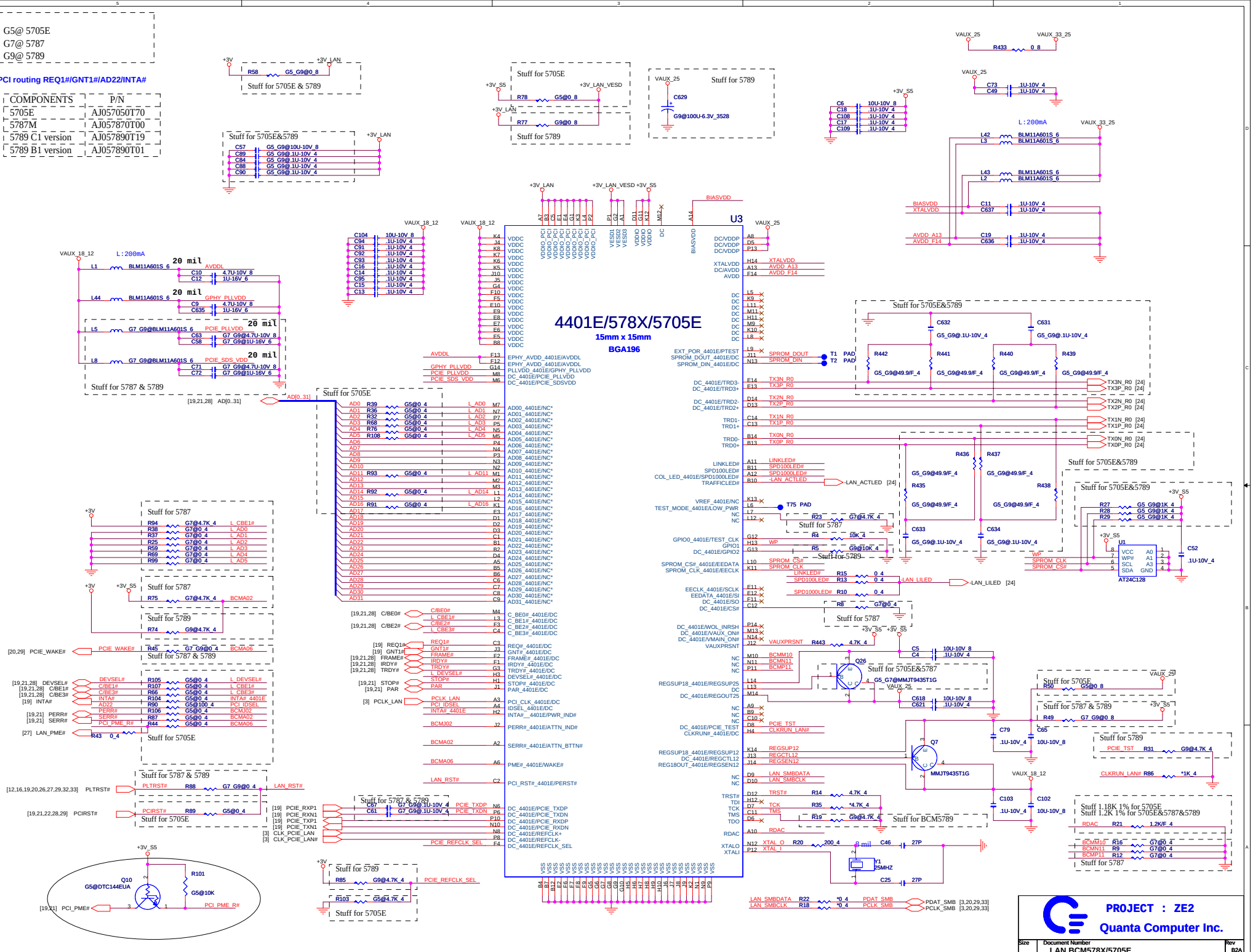

LAN Switch

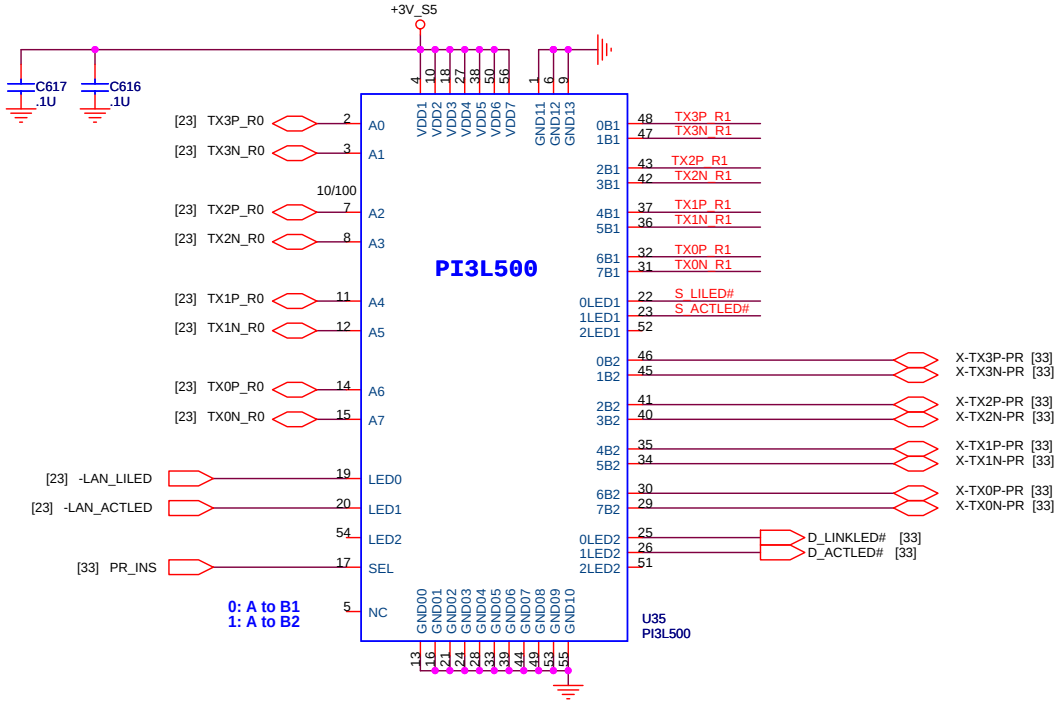

Modem conn and LAN connect

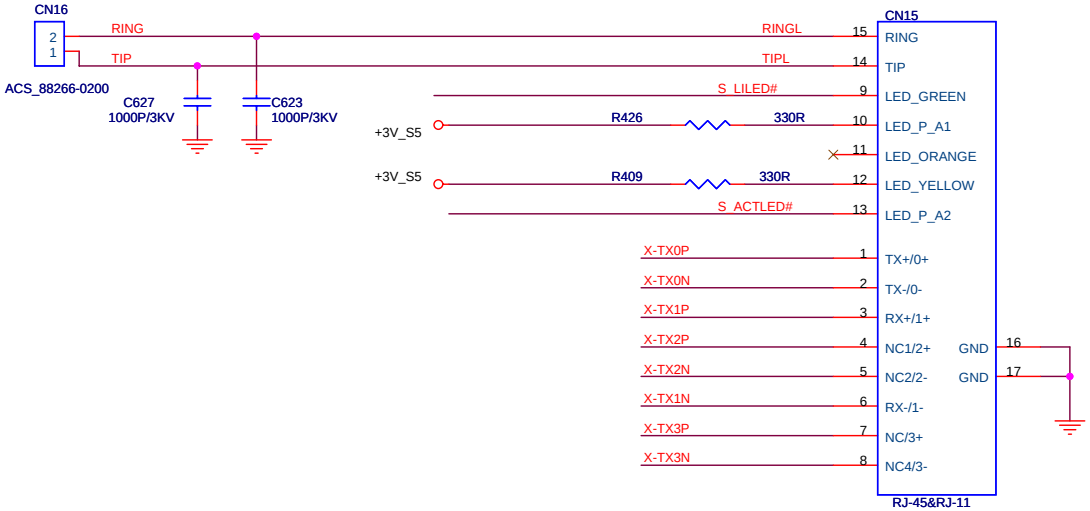

LAN transformer

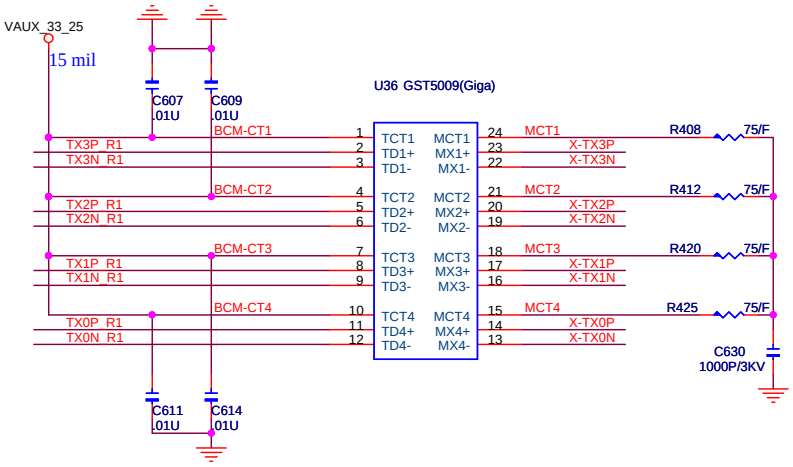

PROJECT : ZE2

Quanta Computer Inc.

Size	Document Number	Rev
	RJ11/RJ45 CONN.	B2A

Date: Thursday, June 08, 2006 Sheet 24 of 42

USB PORTS

Acer: every port support 1.5A current

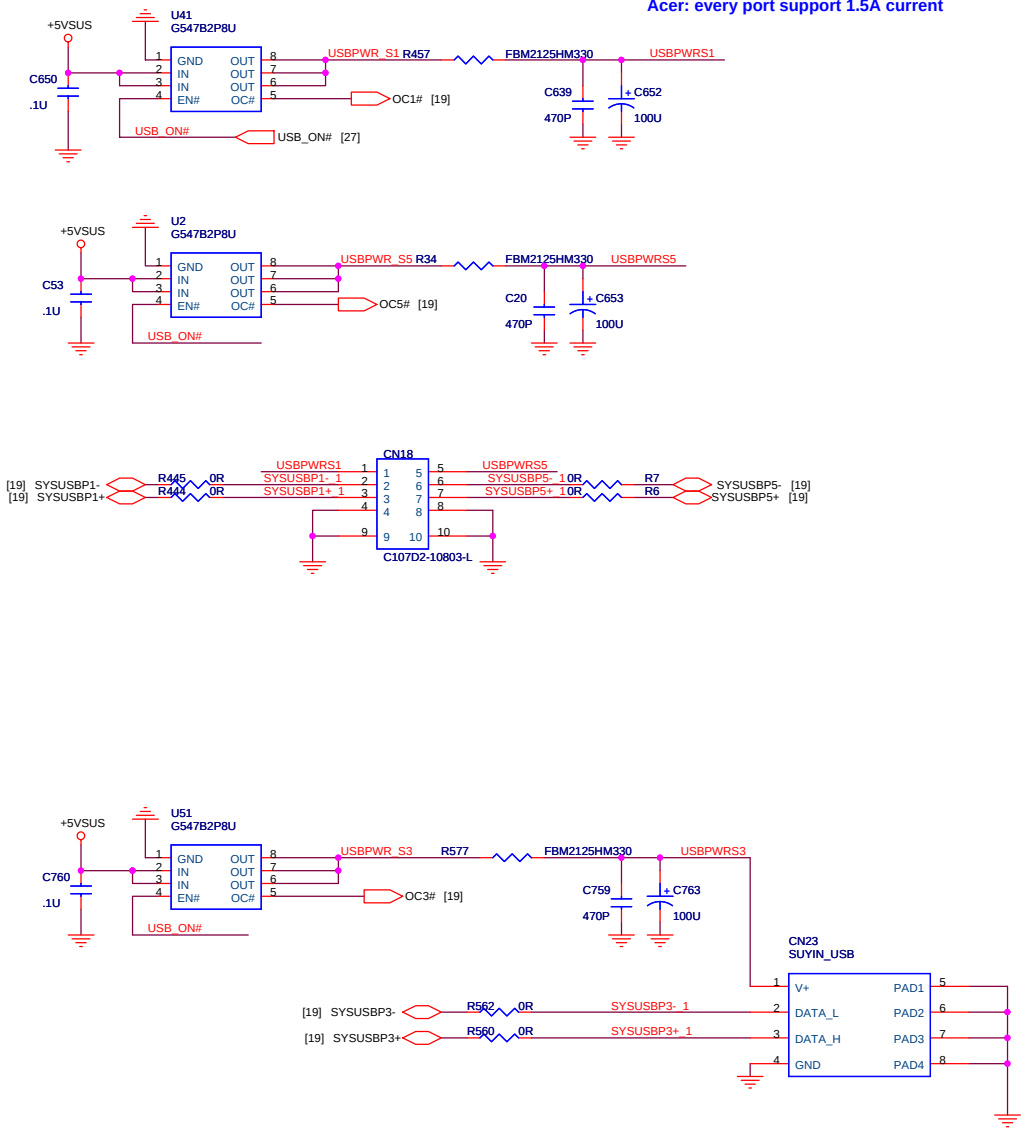

Bluetooth

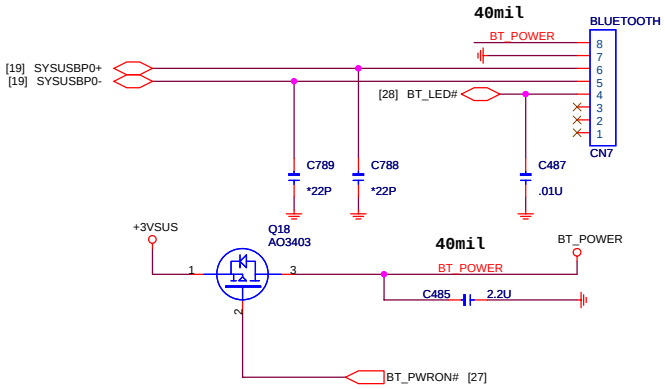

FAN

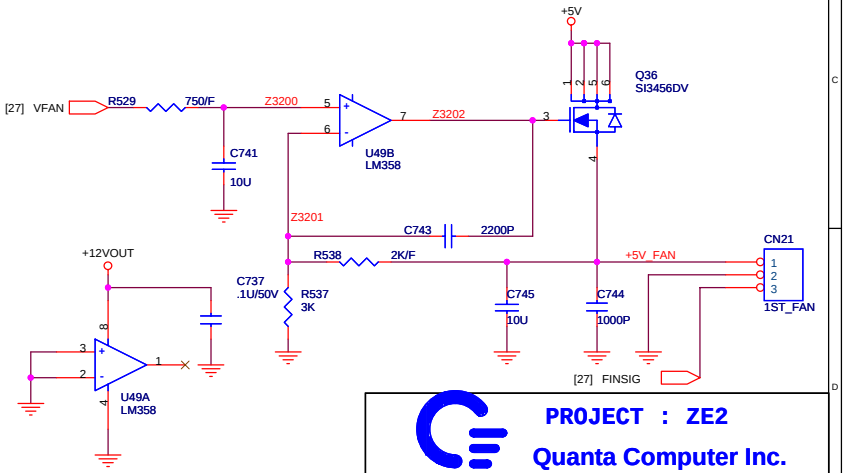

PROJECT : ZE2

Quanta Computer Inc.

Size	Document Number	Rev
	USB PORTS & BLUETOOTH & FAN	D2B

Date: Thursday, June 08, 2006 Sheet 25 of 42

SIO(LPT/Serial port/Digitizer/FIR)

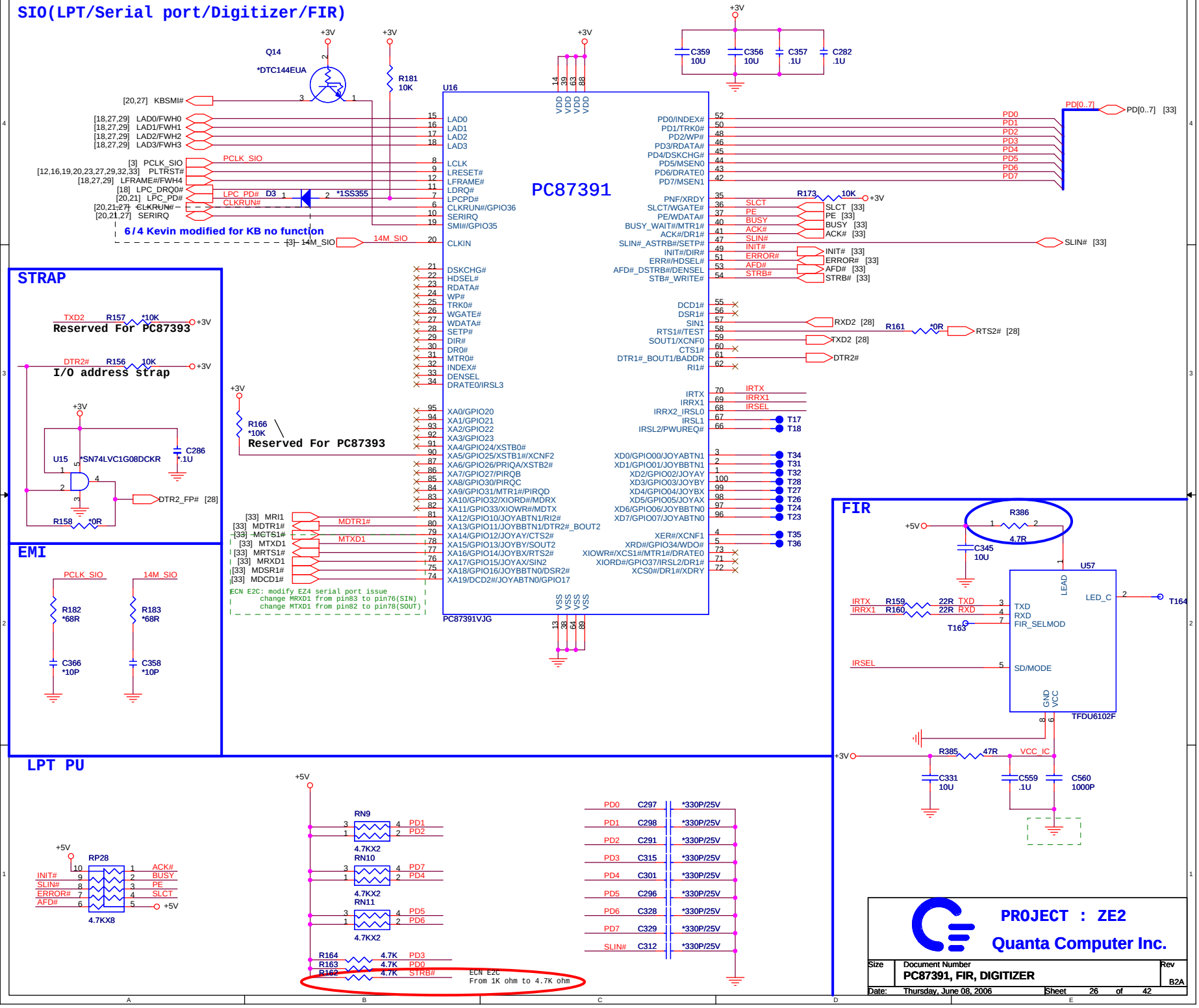

PROJECT : ZE2

Quanta Computer Inc.

Size	Document Number	Rev
	PC87391, FIR, DIGITIZER	B2A

Date: Thursday, June 08, 2006 Sheet 26 of 42

KEYBOARD

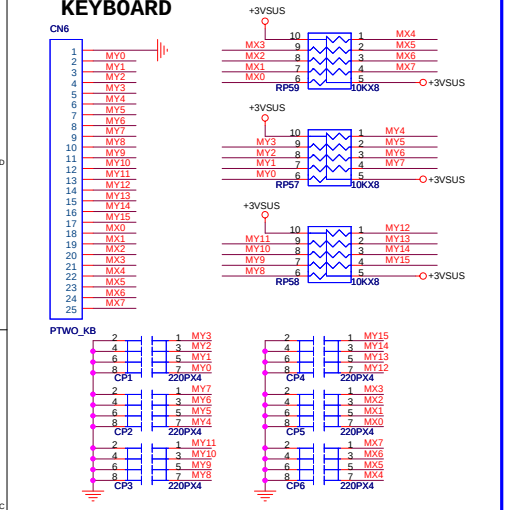

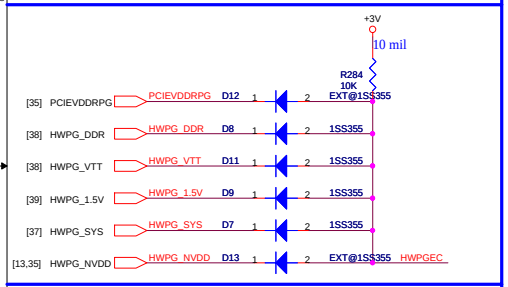

SST provide:
QCI P/N: AKE35ZAKK17
Description: IC EEPROM (40P) SST39VF080-70(8M, TSOP) LF

AMD :Pin 10 is RESET# ; Pin12 is RY/BY#
SST :Pin10,12 are NC

8Mbit (1M Byte),NO PLCC TYPE

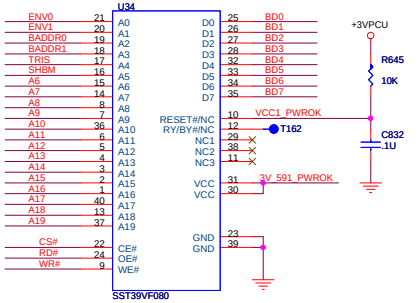

6 / 4 Kevin change 1M BIOS ROM from B-stage

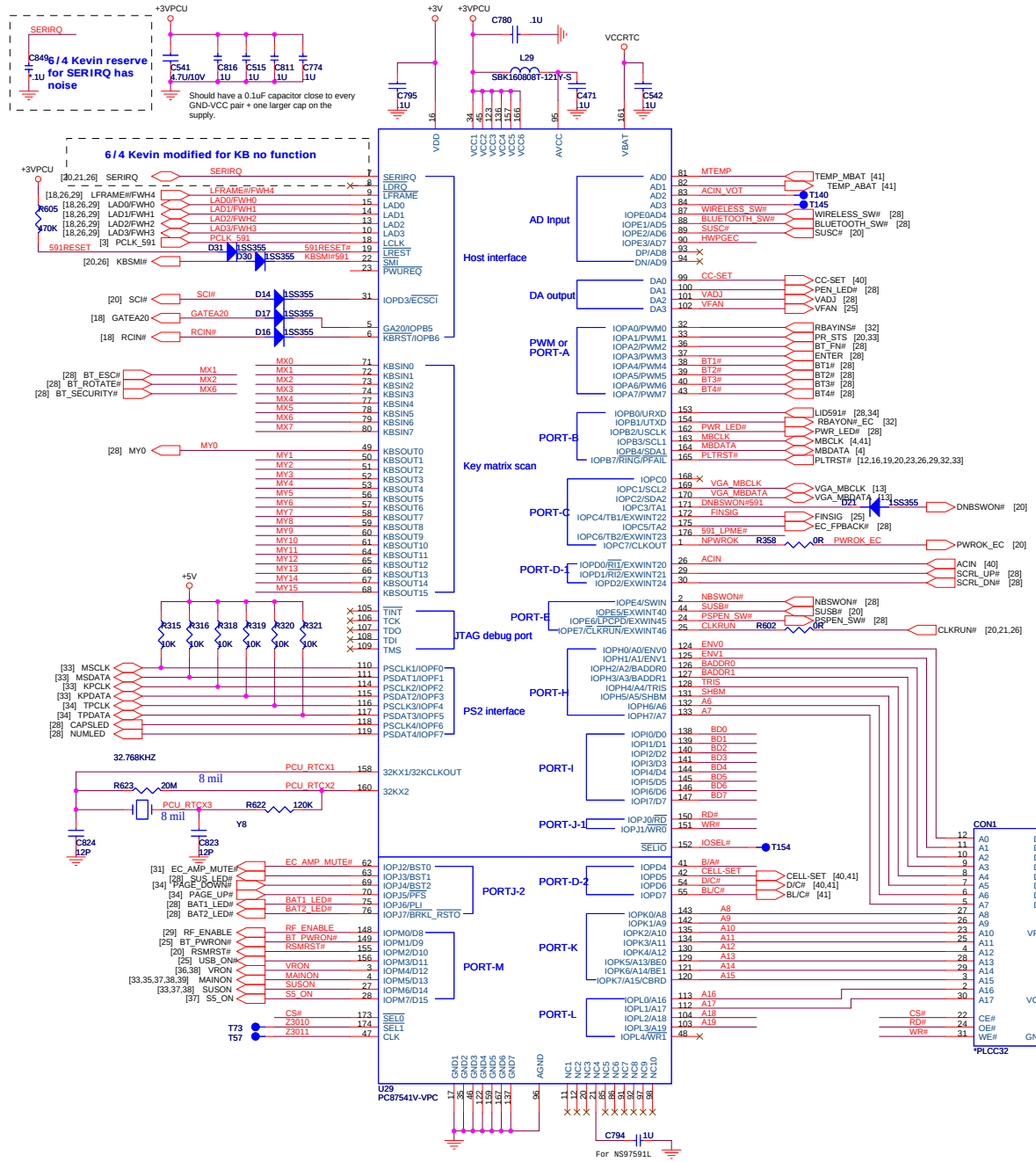

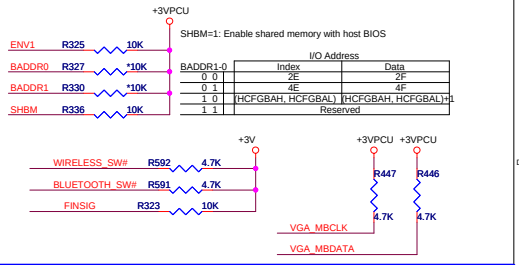

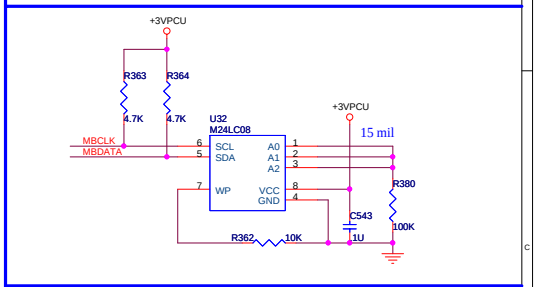

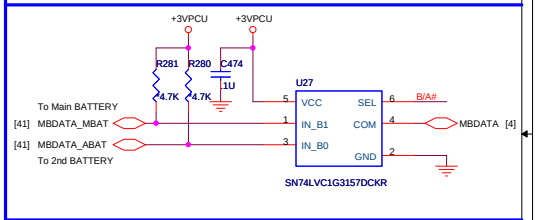

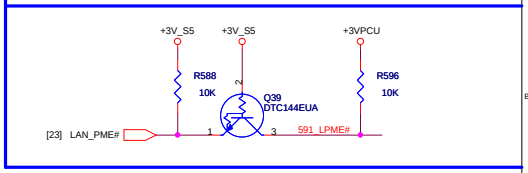

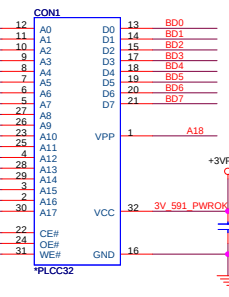

PROJECT : ZE2
Quanta Computer Inc.

Size	Document Number	Rev
		D2B

Date: Friday, June 09, 2006 Sheet 27 of 42

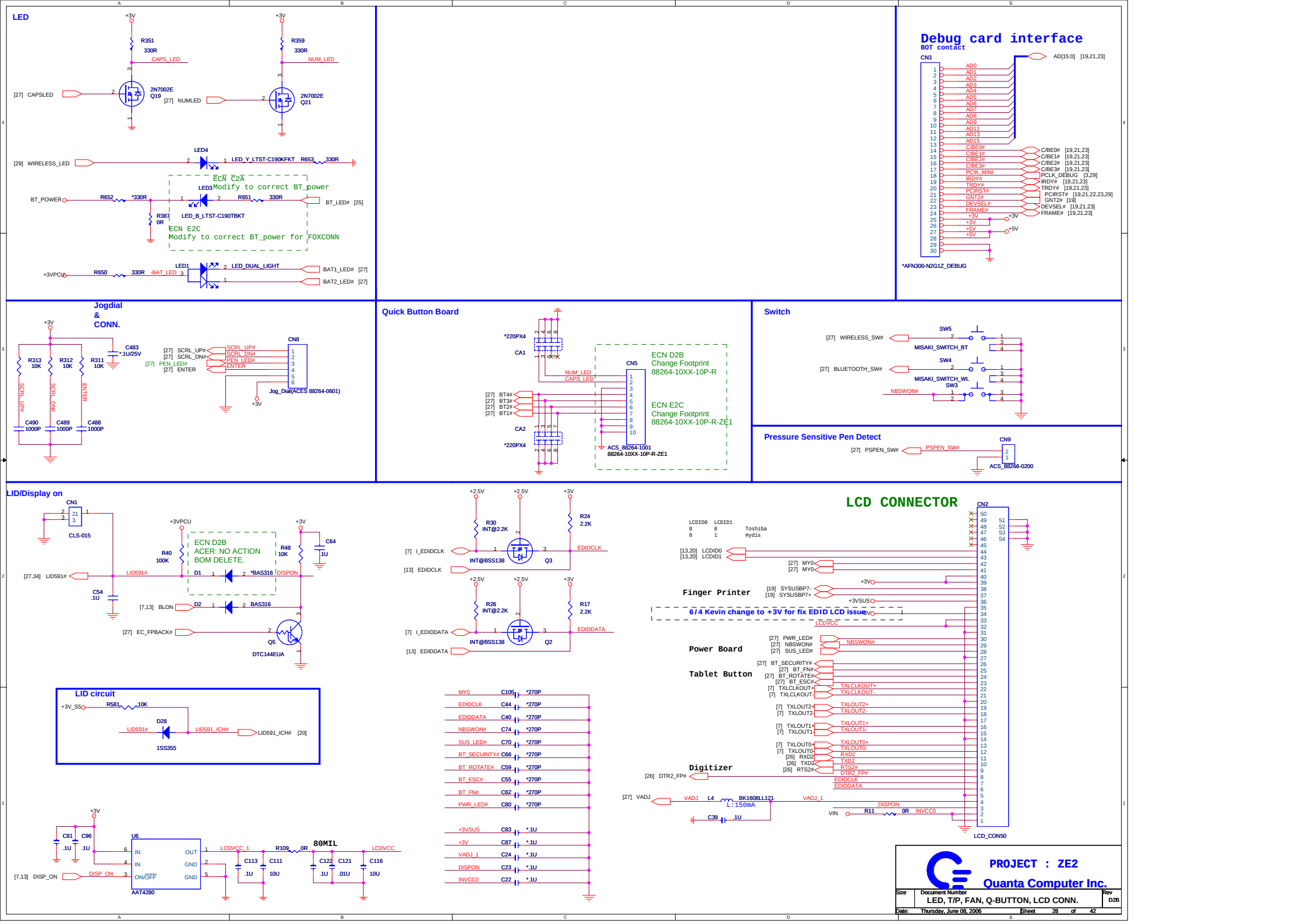
LED
R351 330R CAPS_LED
R359 330R NUM_LED
[27] CAPSLED
2N7002E Q19
[27] NUMLED
2N7002E Q21
[29] WIRELESS_LED
LED4
LED_Y_LTST-C190KFKT
R653 330R
ECN C2A
Modify to correct BT_power
BT_POWER
R652 *330R
LED3
R651 330R
BT_LED# [25]
R387 0R
LED_B_LTST-C190TBKT
ECN E2C
Modify to correct BT_power for FOXCONN
+3VPCU
R650 330R -BAT_LED
LED1
LED_DUAL_LIGHT
BAT1_LED# [27]
BAT2_LED# [27]
Debug card interface
BOT contact
CN3
AD[15:0] [19,21,23]
C/BE0# [19,21,23]
C/BE1# [19,21,23]
C/BE2# [19,21,23]
C/BE3# [19,21,23]
PCLK_MINI
PCLK_DEBUG [3,29]
IRDY# [19,21,23]
TRDY# [19,21,23]
PCIRST# [19,21,22,23,29]
GNT2# [19]
DEVSEL# [19,21,23]
FRAME# [19,21,23]
*AFN300-N2G1Z_DEBUG
Jogdial & CONN.
R313 10K
R312 10K
R311 10K
C483 *.1U/25V
SCRL_UP#
SCRL_DN#
ENTER
C490 1000P
C489 1000P
C488 1000P
[27] SCRL_UP#
[27] SCRL_DN#
[27] PEN_LED#
[27] ENTER
CN8
Jog_Dial(ACES 88264-0601)
Quick Button Board
*220PX4
CA1
NUM_LED
CAPS_LED
[27] BT4#
[27] BT3#
[27] BT2#
[27] BT1#
CA2
CN5
ECN D2B
Change Footprint
88264-10XX-10P-R
ECN E2C
Change Footprint
88264-10XX-10P-R-ZE1
ACS_88264-1001
88264-10XX-10P-R-ZE1
Switch
[27] WIRELESS_SW#
SW5
MISAKI_SWITCH_BT
[27] BLUETOOTH_SW#
SW4
MISAKI_SWITCH_WL
SW3
NBSWON#
Pressure Sensitive Pen Detect
[27] PSPEN_SW#
PSPEN_SW#
CN9
ACS_88266-0200
LID/Display on
CN1
CLS-015
[27,34] LID591#
LID591#
R40 100K
ECN D2B
ACER: NO ACTION
BOM DELETE.
R48 10K
C64 .1U
D1
*BAS316
DISPON
C54 .1U
[7,13] BLON
D2
BAS316
[27] EC_FPBACK#
Q5
DTC144EUA
R30 INT@2.2K
R24 2.2K
[7] I_EDIDCLK
INT@BSS138
Q3
EDIDCLK
[13] EDIDCLK
R26 INT@2.2K
R17 2.2K
[7] I_EDIDDATA
Q2
EDIDDATA
[13] EDIDDATA
LCD CONNECTOR
CN2
LCDID0 LCDID1
0 0 Toshiba
0 1 Hydis
[13,20] LCDID0
[13,20] LCDID1
[27] MY0
[27] MY0
Finger Printer
[19] SYSUSBP7-
[19] SYSUSBP7+
+3VSUS
6/4 Kevin change to +3V for fix EDID LCD issue
LCDVCC
Power Board
[27] PWR_LED#
[27] NBSWON#
[27] SUS_LED#
Tablet Button
[27] BT_SECURITY#
[27] BT_FN#
[27] BT_ROTATE#
[27] BT_ESC#
[7] TXLCLKOUT+
[7] TXLCLKOUT-
[7] TXLOUT2+
[7] TXLOUT2-
[7] TXLOUT1+
[7] TXLOUT1-
[7] TXLOUT0+
[7] TXLOUT0-
[26] RXD2
[26] TXD2
[26] RTS2#
Digitizer
[26] DTR2_FP#
EDIDCLK
EDIDDATA
[27] VADJ
VADJ L4 BK1608LL121 L:150mA
VADJ_1
C39 .1U
VIN R11 0R INVCC0
DISPON
LCD_CON50
LID circuit
+3V_S5 R581 10K
D28
LID591#
LID591_ICH#
LID591_ICH# [20]
1SS355
MY0 C105 *270P
EDIDCLK C44 *270P
EDIDDATA C40 *270P
NBSWON# C74 *270P
SUS_LED# C70 *270P
BT_SECURITY# C66 *270P
BT_ROTATE# C59 *270P
BT_ESC# C55 *270P
BT_FN# C62 *270P
PWR_LED# C80 *270P
+3VSUS C83 *.1U
+3V C87 *.1U
VADJ_1 C24 *.1U
DISPON C23 *.1U
INVCC0 C22 *.1U
C81 .1U
C96 .1U
U6
AAT4280
IN
ON/OFF
OUT
GND
[7,13] DISP_ON
DISP_ON
LCDVCC_1
R109 0R
80MIL
LCDVCC
C113 .1U
C111 10U
C122 .1U
C121 .01U
C116 10U
PROJECT : ZE2
Quanta Computer Inc.
Size
Document Number
LED, T/P, FAN, Q-BUTTON, LCD CONN.
Rev
D2B
Date: Thursday, June 08, 2006
Sheet 28 of 42

MINI CARD

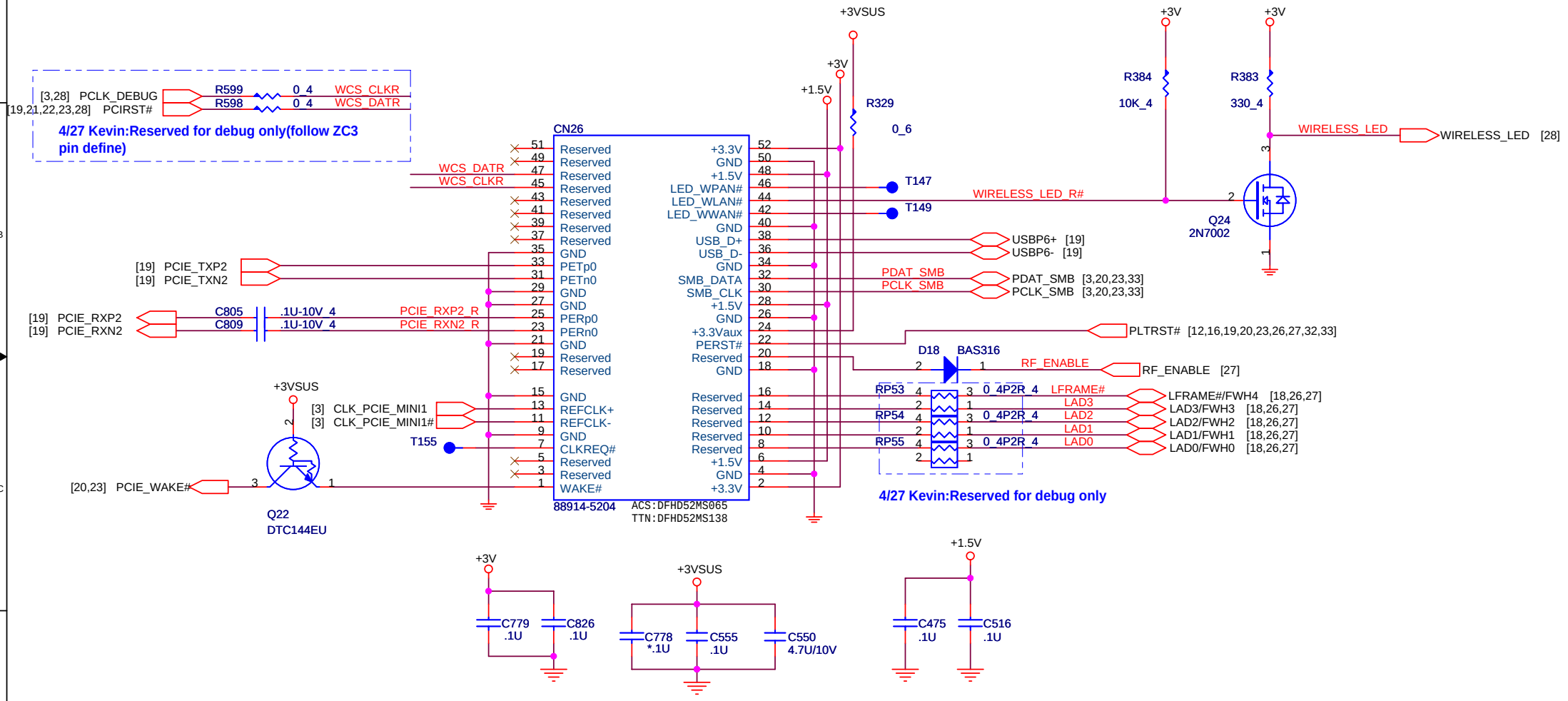

PROJECT : ZE2

Quanta Computer Inc.

Size	Document Number	Rev
	MINI CARD	B2A

Date: Thursday, June 08, 2006 Sheet 29 of 42

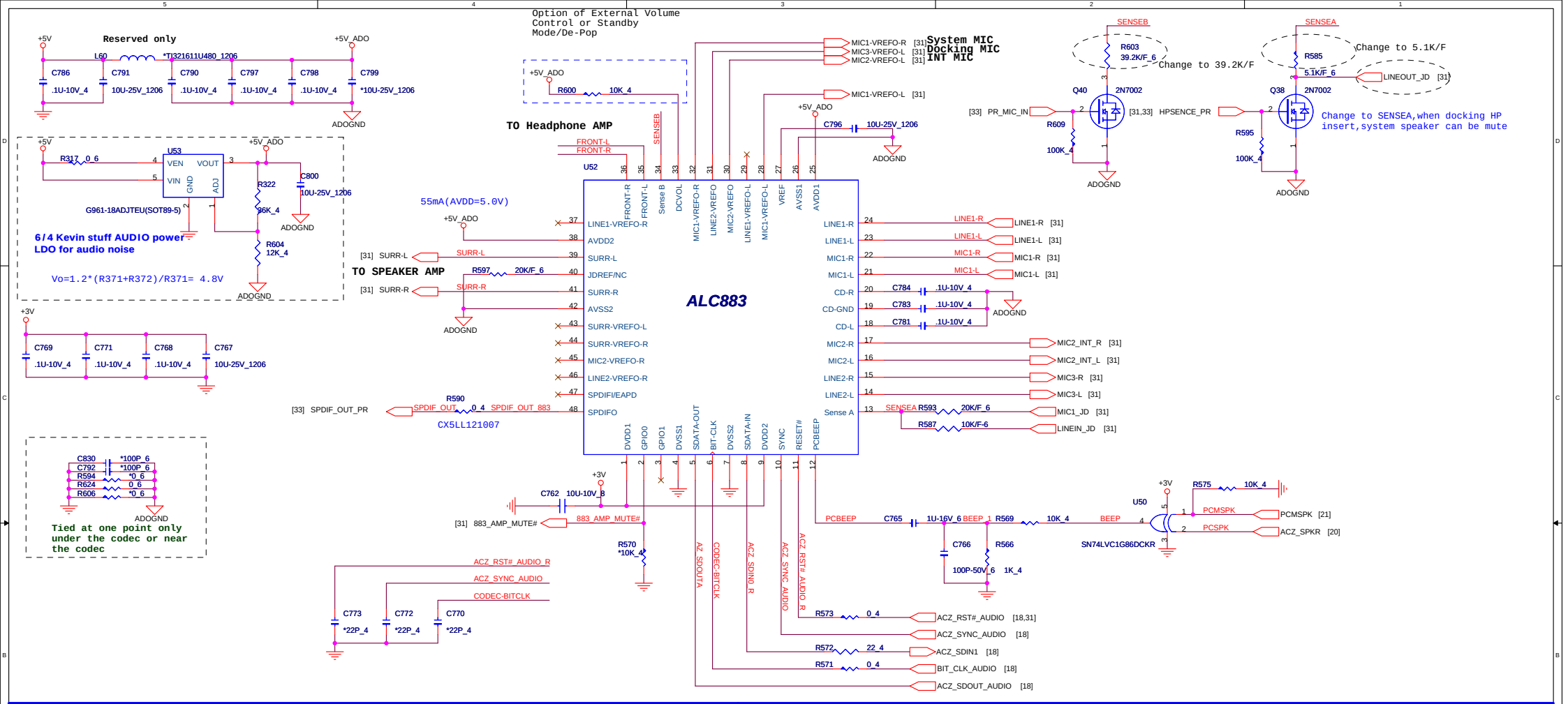

For MDC Module

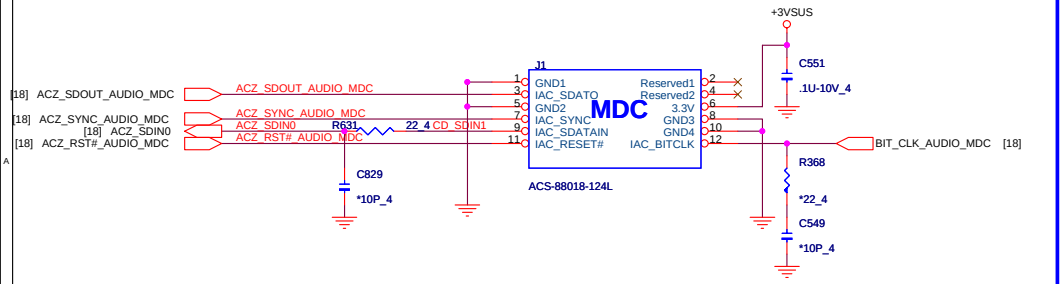

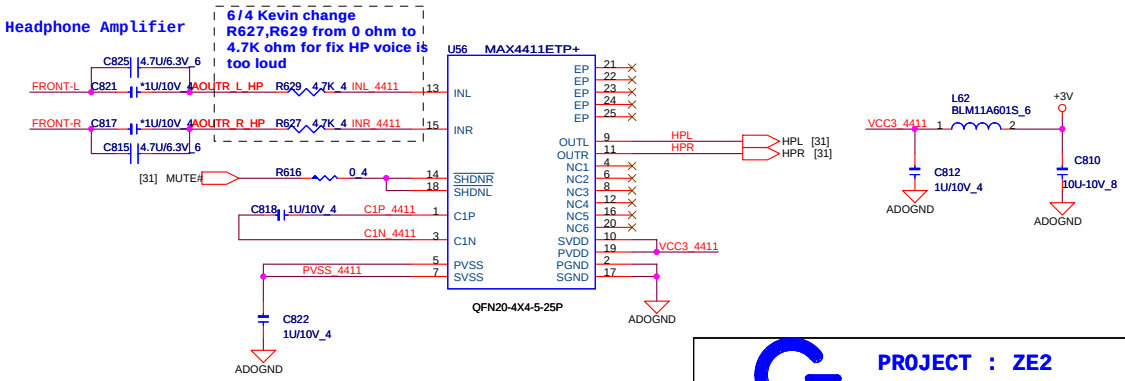

PROJECT : ZE2

Quanta Computer Inc.

Size	Document Number	Rev
	ALC883 & MDC & HP AMP	B2A

Date: Thursday, June 08, 2006 Sheet 30 of 42

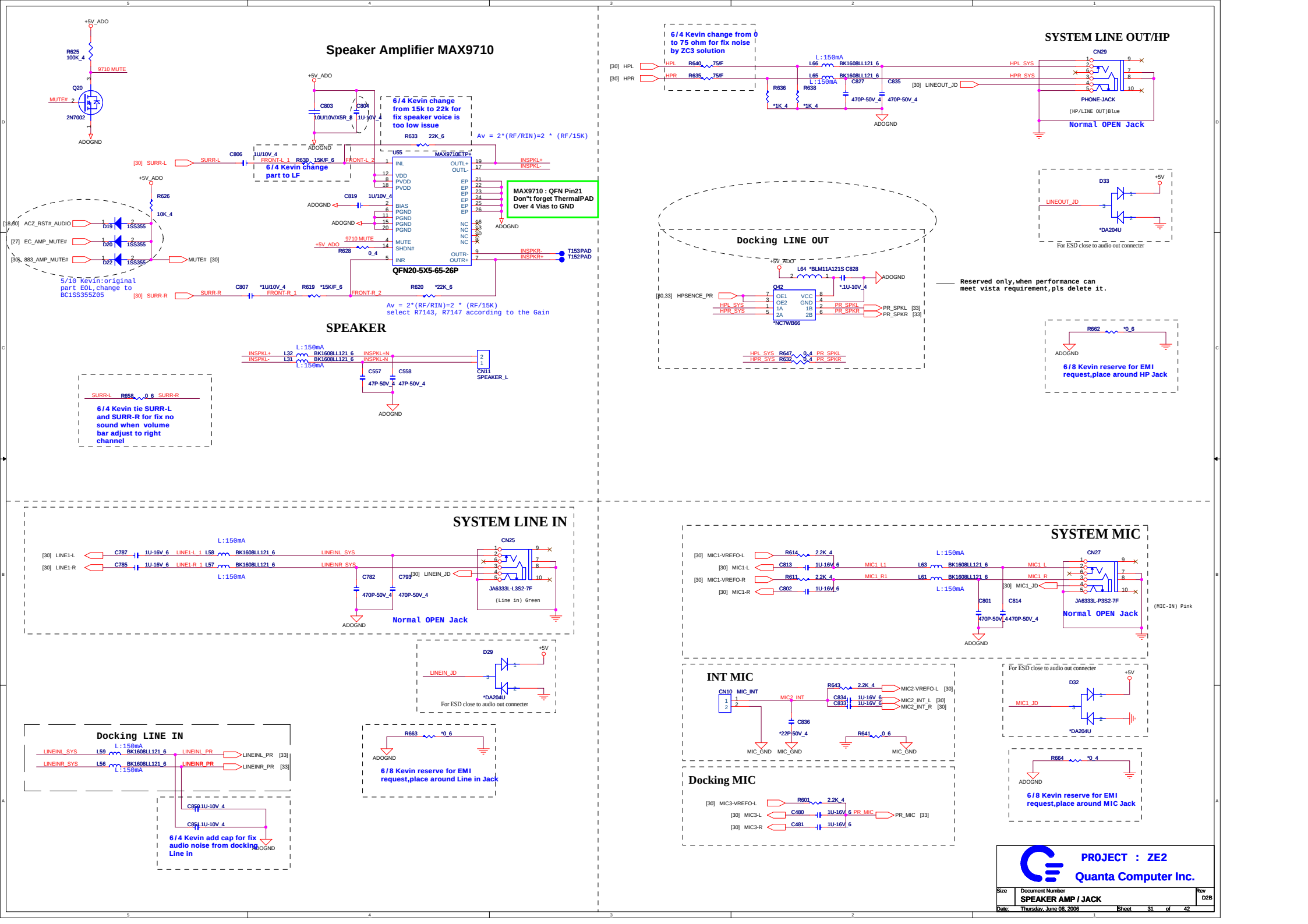
Speaker Amplifier MAX9710
SYSTEM LINE OUT/HP
SPEAKER
SYSTEM LINE IN
SYSTEM MIC
INT MIC
Docking MIC
Docking LINE OUT
Docking LINE IN
6/4 Kevin change from 0 to 75 ohm for fix noise by ZC3 solution
6/4 Kevin change from 15k to 22k for fix speaker voice is too low issue
6/4 Kevin change part to LF
Av = 2*(RF/RIN)=2 * (RF/15K)
MAX9710 : QFN Pin21 Don"t forget ThermalPAD Over 4 Vias to GND
QFN20-5X5-65-26P
5/10 Kevin:original part EOL,change to BC1SS355Z05
Av = 2*(RF/RIN)=2 * (RF/15K) select R7143, R7147 according to the Gain
6/4 Kevin tie SURR-L and SURR-R for fix no sound when volume bar adjust to right channel
Normal OPEN Jack
PHONE-JACK
(HP/LINE OUT)Blue
For ESD close to audio out connecter
Reserved only,when performance can meet vista requirement,pls delete it.
6/8 Kevin reserve for EMI request,place around HP Jack
(Line in) Green
(MIC-IN) Pink
6/8 Kevin reserve for EMI request,place around Line in Jack
6/4 Kevin add cap for fix audio noise from docking Line in
6/8 Kevin reserve for EMI request,place around MIC Jack
PROJECT : ZE2
Quanta Computer Inc.
SPEAKER AMP / JACK
Thursday, June 08, 2006
Sheet 31 of 42

PATA HDD connector

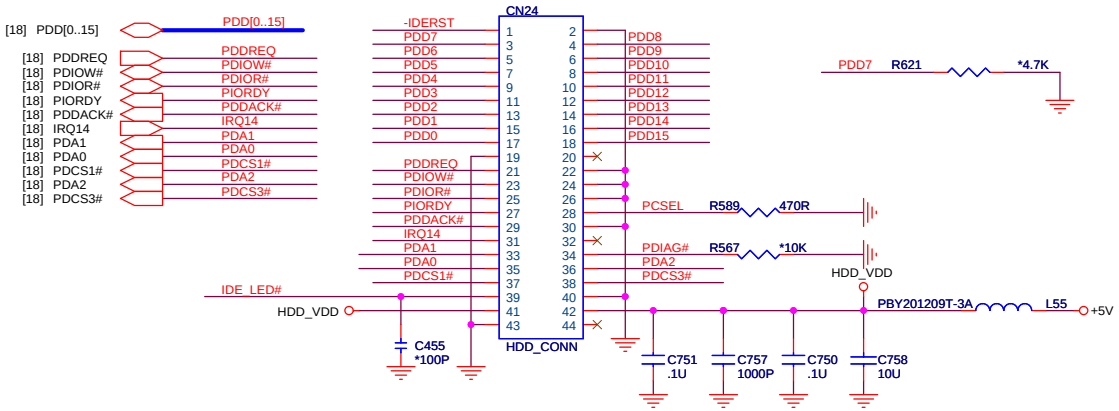

IDE ODD connector

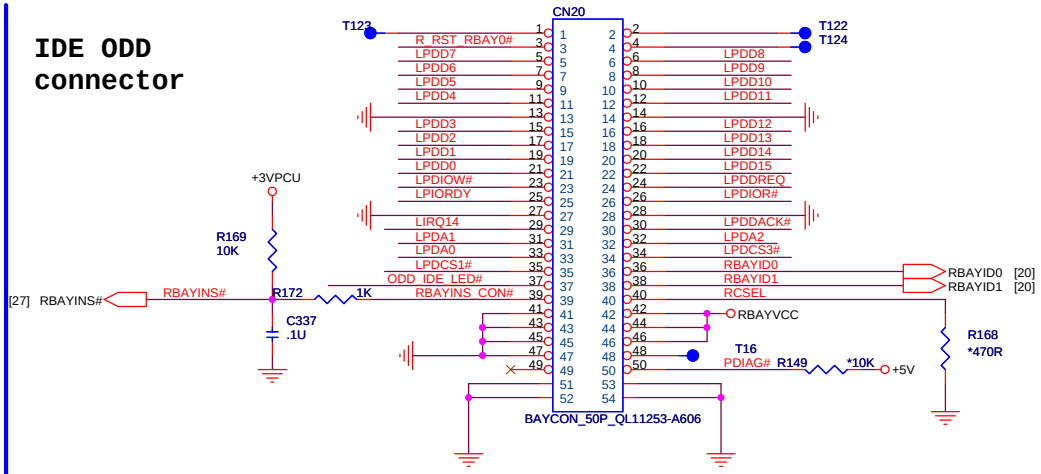

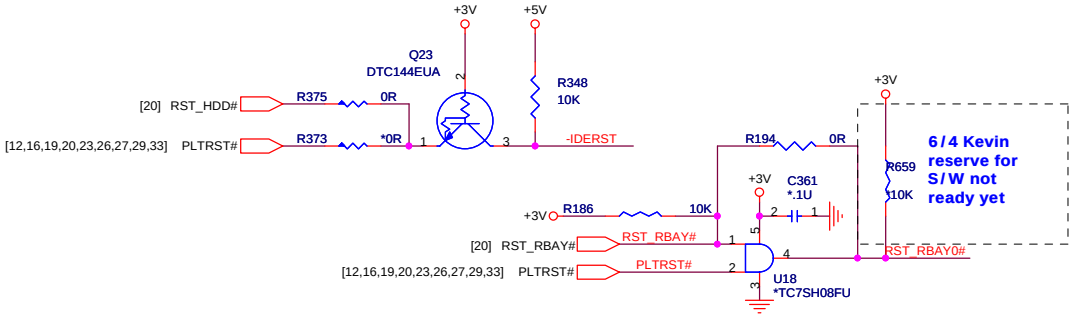

ODD MULTI BAY POWER

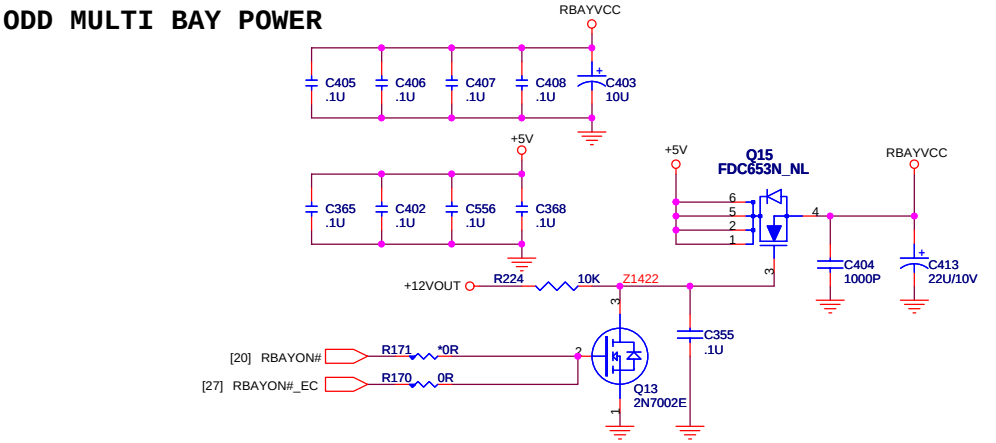

IDE BUFFER

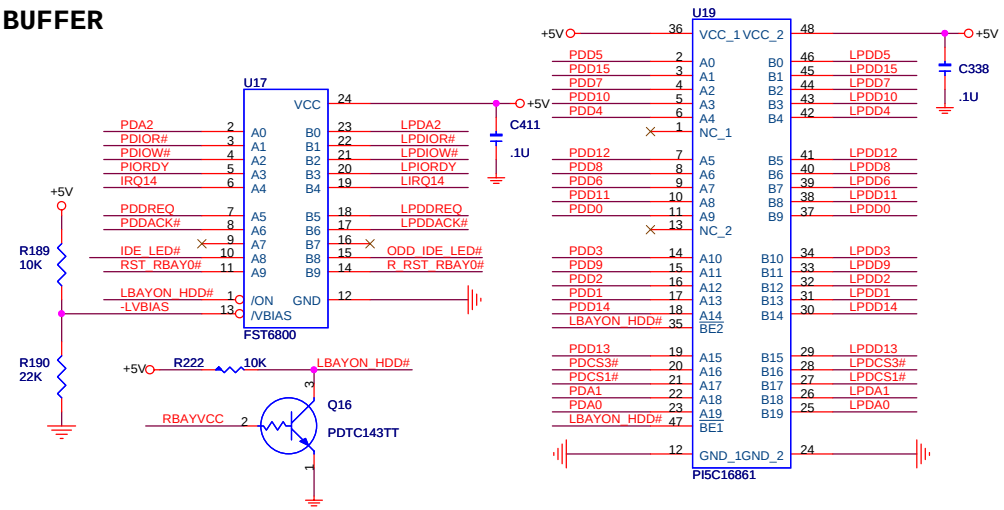

HDD/ODD LED

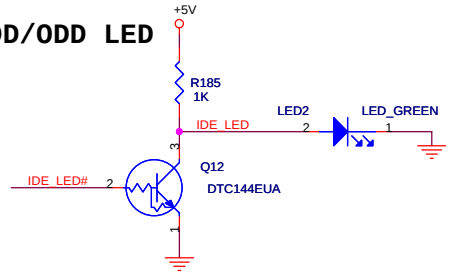

PROJECT : ZE2

Quanta Computer Inc.

Size	Document Number	Rev
	IDE HDD(PATA)	B2A
Date: Thursday, June 08, 2006	Sheet 32 of 42	

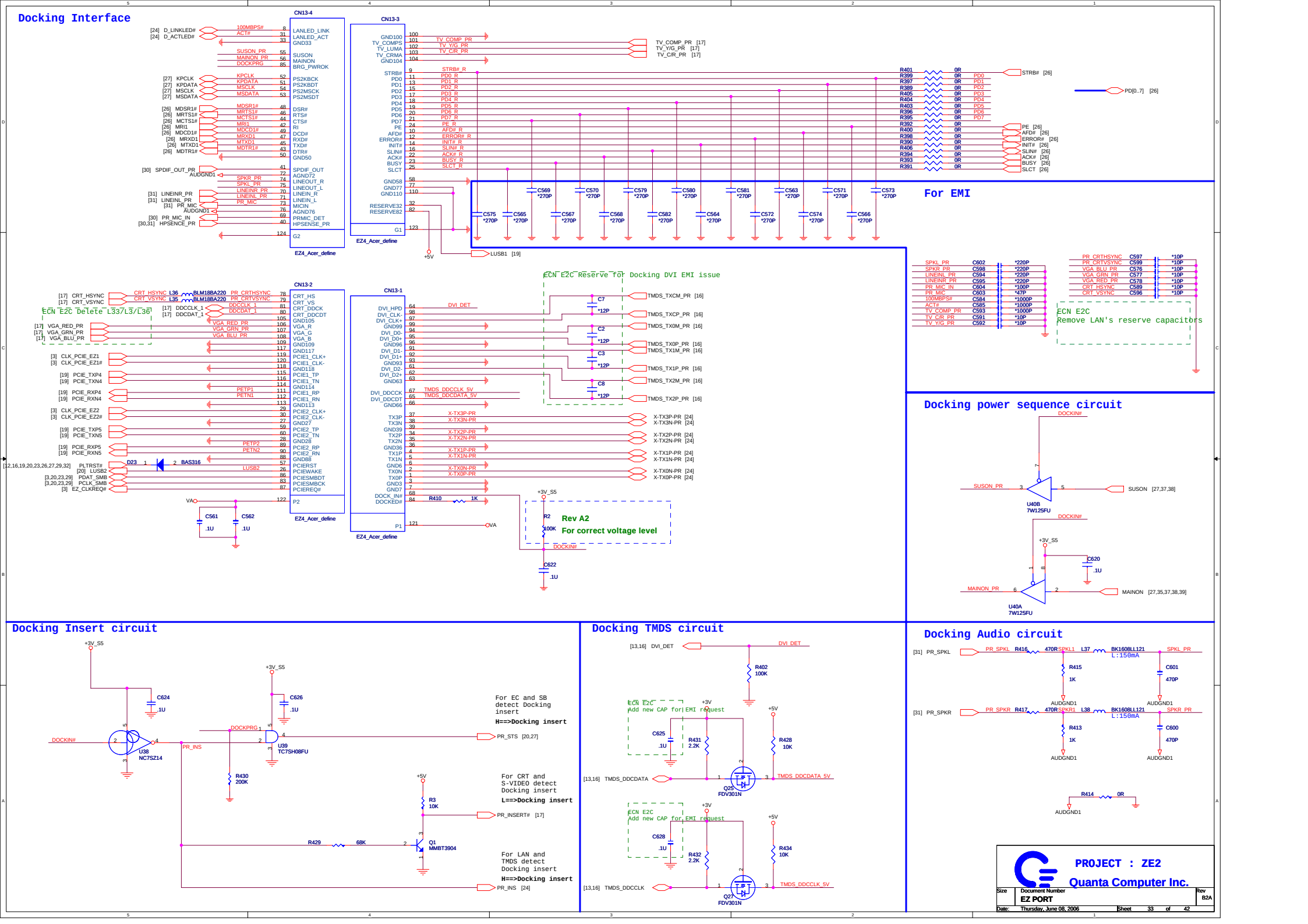
Docking Interface
CN13-4
CN13-3
CN13-2
CN13-1
EZ4_Acer_define
For EMI
ECN E2C Reserve for Docking DVI EMI issue
ECN E2C Delete L337/L3/L36
ECN E2C
Remove LAN's reserve capacitors
Rev A2
For correct voltage level
Docking power sequence circuit
U40B
7W125FU
U40A
7W125FU
Docking Insert circuit
U38
NC7SZ14
U39
TC7SH08FU
For EC and SB detect Docking insert
H==>Docking insert
For CRT and S-VIDEO detect Docking insert
L==>Docking insert
For LAN and TMDS detect Docking insert
H==>Docking insert
Docking TMDS circuit
ECN E2C
Add new CAP for EMI request
FDV301N
Docking Audio circuit
PROJECT : ZE2
Quanta Computer Inc.
Size
Document Number
EZ PORT
Rev
B2A
Date: Thursday, June 08, 2006
Sheet 33 of 42

ALPS SOLUTION

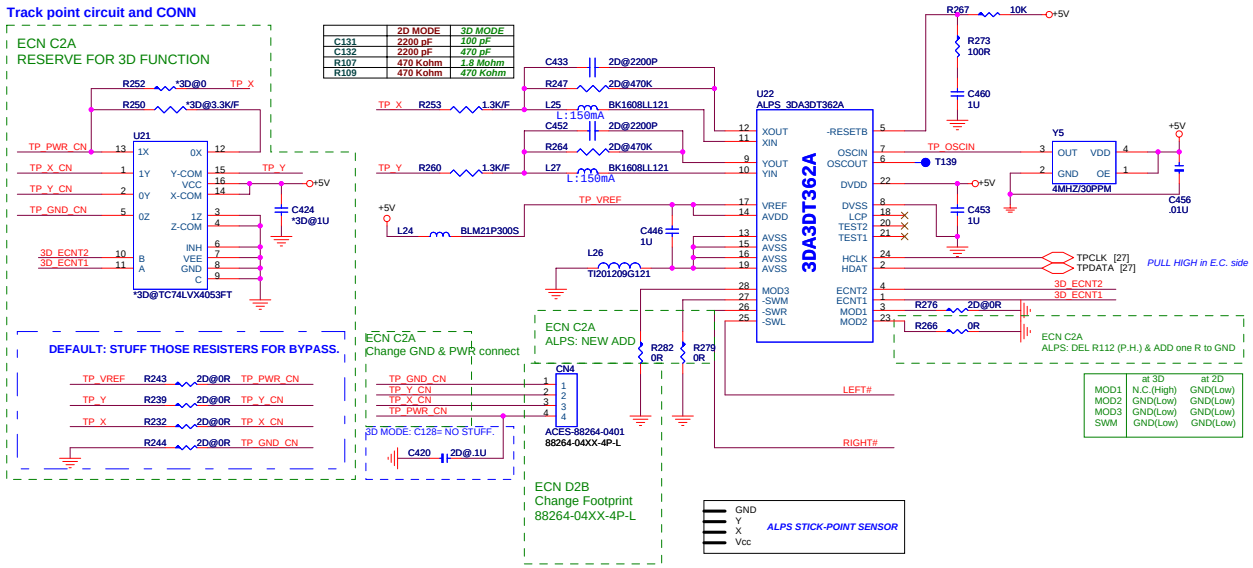

	2D MODE	3D MODE
C131	2200 pF	100 pF
C132	2200 pF	470 pF
R107	470 Kohm	1.8 Mohm
R109	470 Kohm	470 Kohm

	at 3D	at 2D
MOD1	N.C.(High)	GND(Low)
MOD2	GND(Low)	GND(Low)
MOD3	GND(Low)	GND(Low)
SWM	GND(Low)	GND(Low)

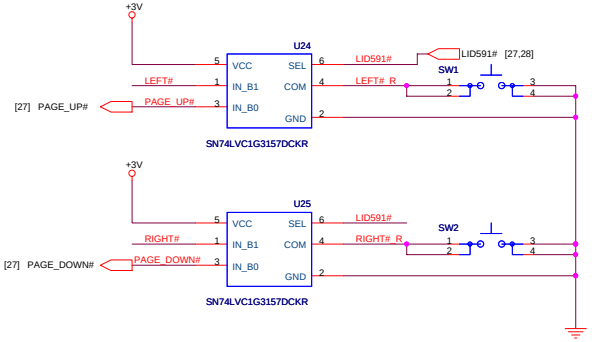

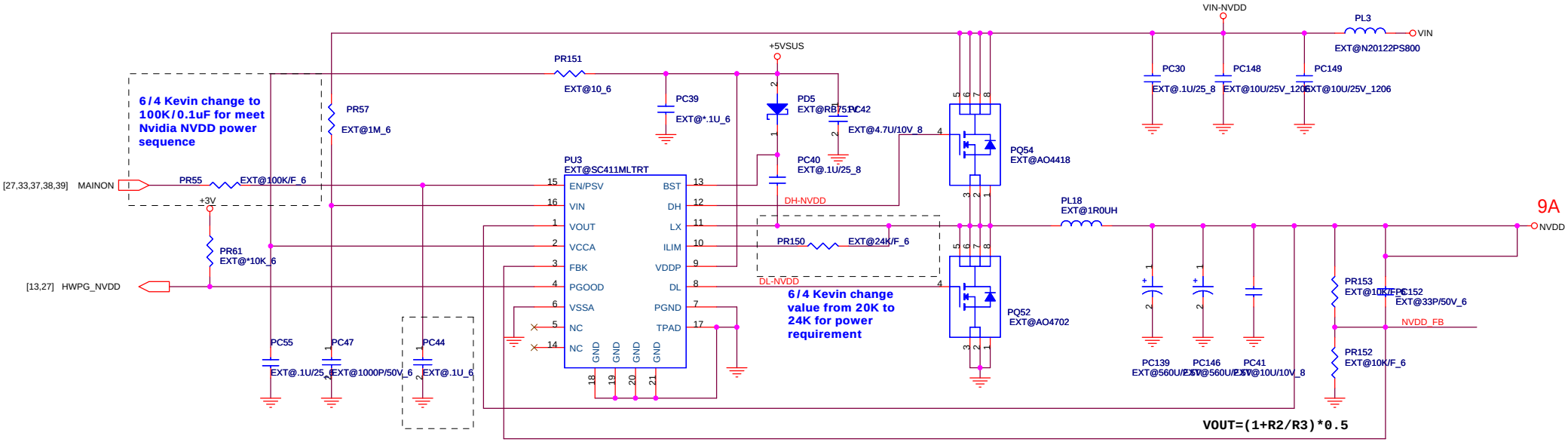

6/4 Kevin Nvidia's concern:NVDD must delay from +3V

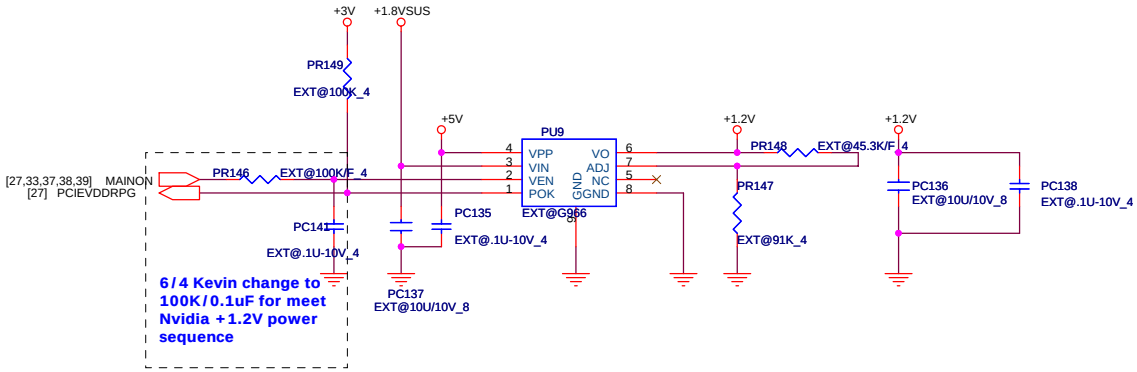

<OrgName>
<OrgAddr1>
<OrgAddr2>
<OrgAddr3>
<OrgAddr4>

PROJECT : ZE2
Quanta Computer Inc.

Size	Document Number	Rev
	NVDD/1.2V	B2A

Date: Thursday, June 08, 2006 Sheet 35 of 42

CPU

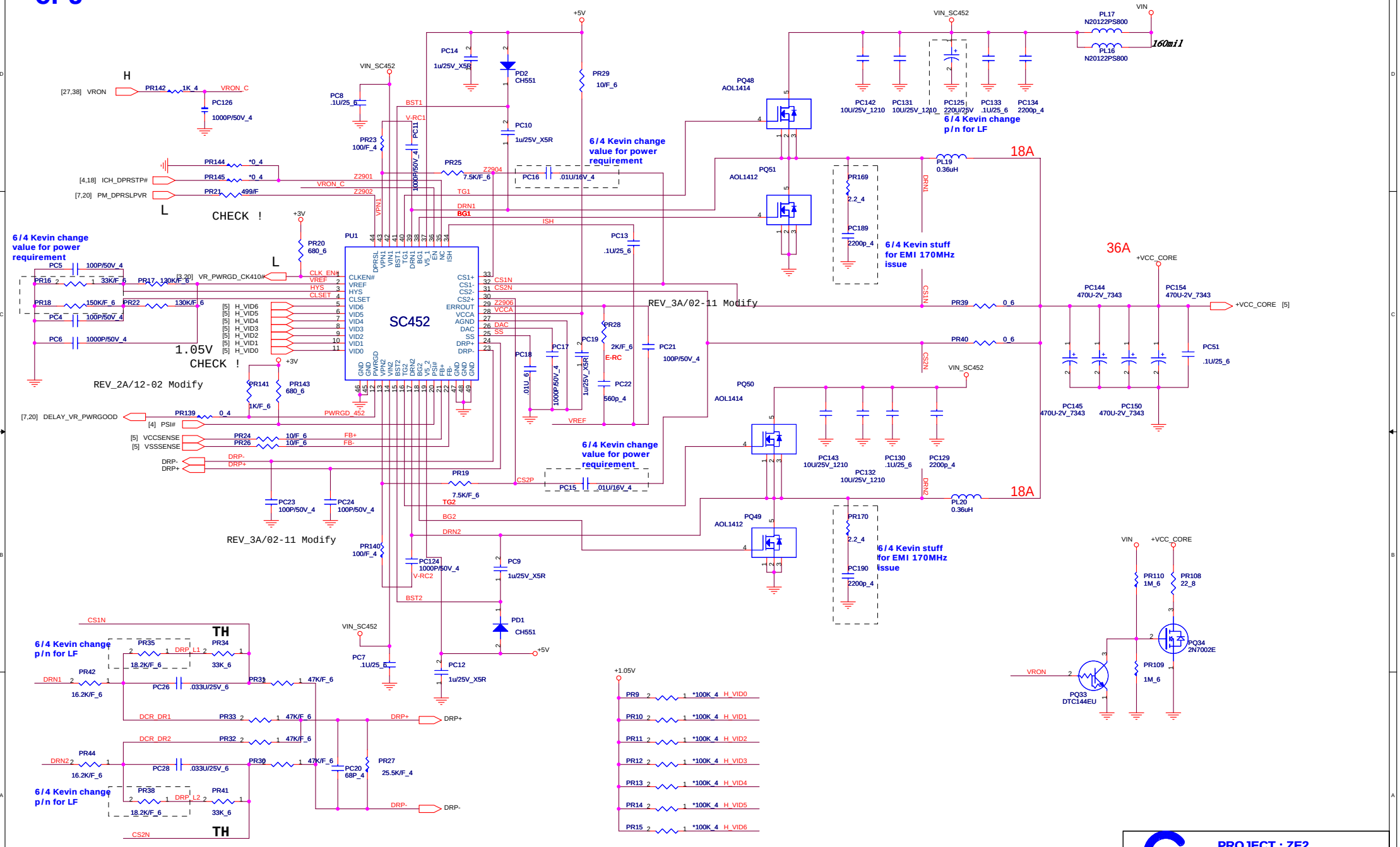

PROJECT : ZE2
Quanta Computer Inc.

Size	Document Number	Rev
	CPU CORE(SC452)	D2B

Date: Thursday, June 08, 2006 Sheet 36 of 42

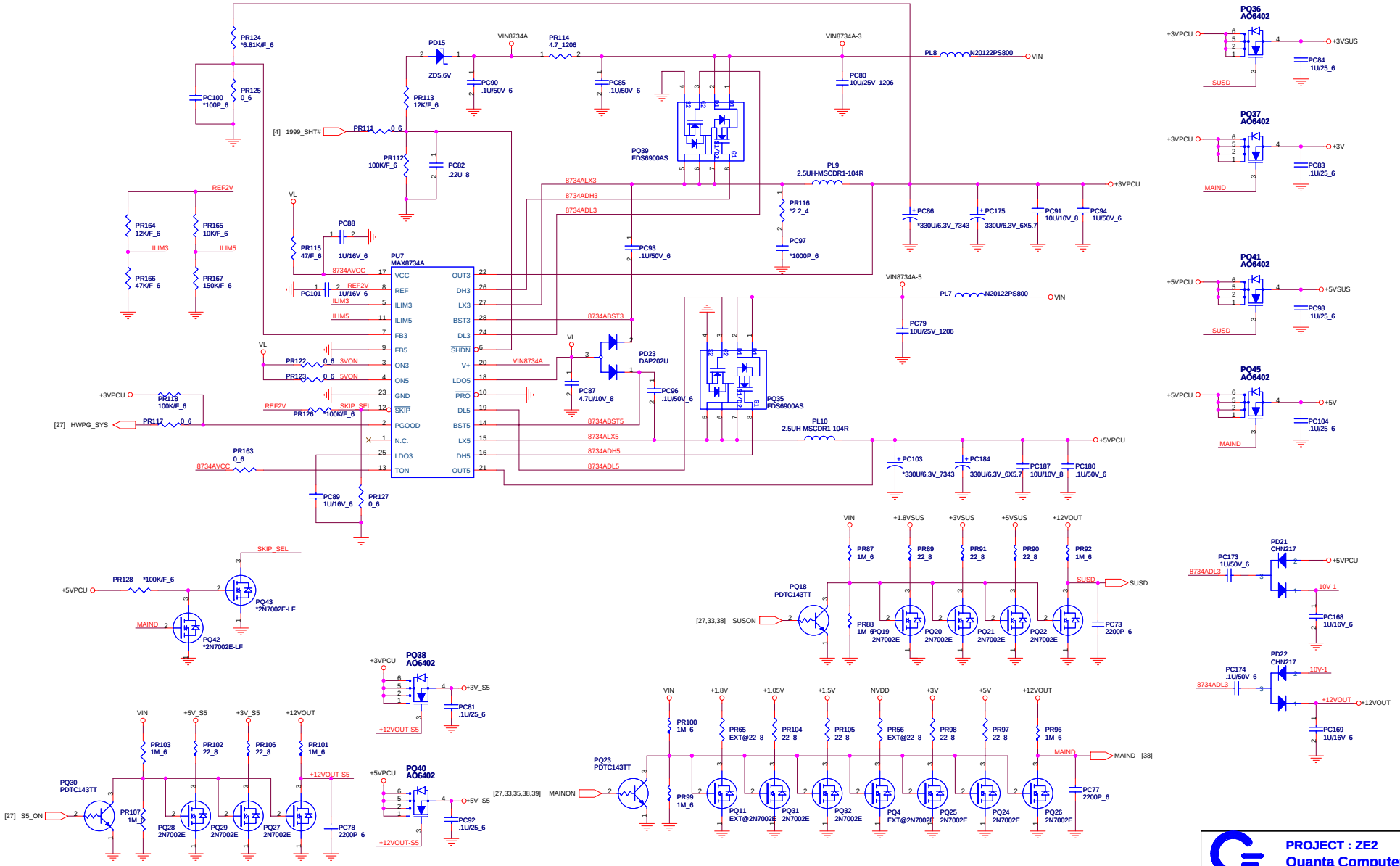
PU7
MAX8734A
VCC
REF
ILIM3
ILIM5
FB3
FB5
ON3
ON5
GND
SKIP
PGOOD
N.C.
LDO3
TON
OUT3
DH3
LX3
BST3
DL3
SHDN
V+
LDO5
PRO
DL5
BST5
LX5
DH5
OUT5
PD15
ZD5.6V
VIN8734A
VIN8734A-3
VIN8734A-5
PL8
N20122PS800
PL7
N20122PS800
PL9
2.5UH-MSCDR1-104R
PL10
2.5UH-MSCDR1-104R
PQ39
FDS6900AS
PQ35
FDS6900AS
PD23
DAP202U
PQ36
AO6402
PQ37
AO6402
PQ41
AO6402
PQ45
AO6402
PQ38
AO6402
PQ40
AO6402
PQ18
PDTC143TT
PQ23
PDTC143TT
PQ30
PDTC143TT
PQ43
*2N7002E-LF
PQ42
*2N7002E-LF
PD21
CHN217
PD22
CHN217
+3VPCU
+3VSUS
+3V
+5VPCU
+5VSUS
+5V
+12VOUT
+1.8VSUS
+1.8V
+1.05V
+1.5V
NVDD
+3V_S5
+5V_S5
+12VOUT-S5
SUSD
MAIND
SKIP_SEL
[4] 1999_SHT#
[27] HWPG_SYS
[27] S5_ON
[27,33,38] SUSON
[27,33,35,38,39] MAINON
[38]
PROJECT : ZE2
Quanta Computer Inc.
Size
Document Number
5V/3.3V(MAX8234A)
Rev
B2A
Date: Thursday, June 08, 2006
Sheet 37 of 42

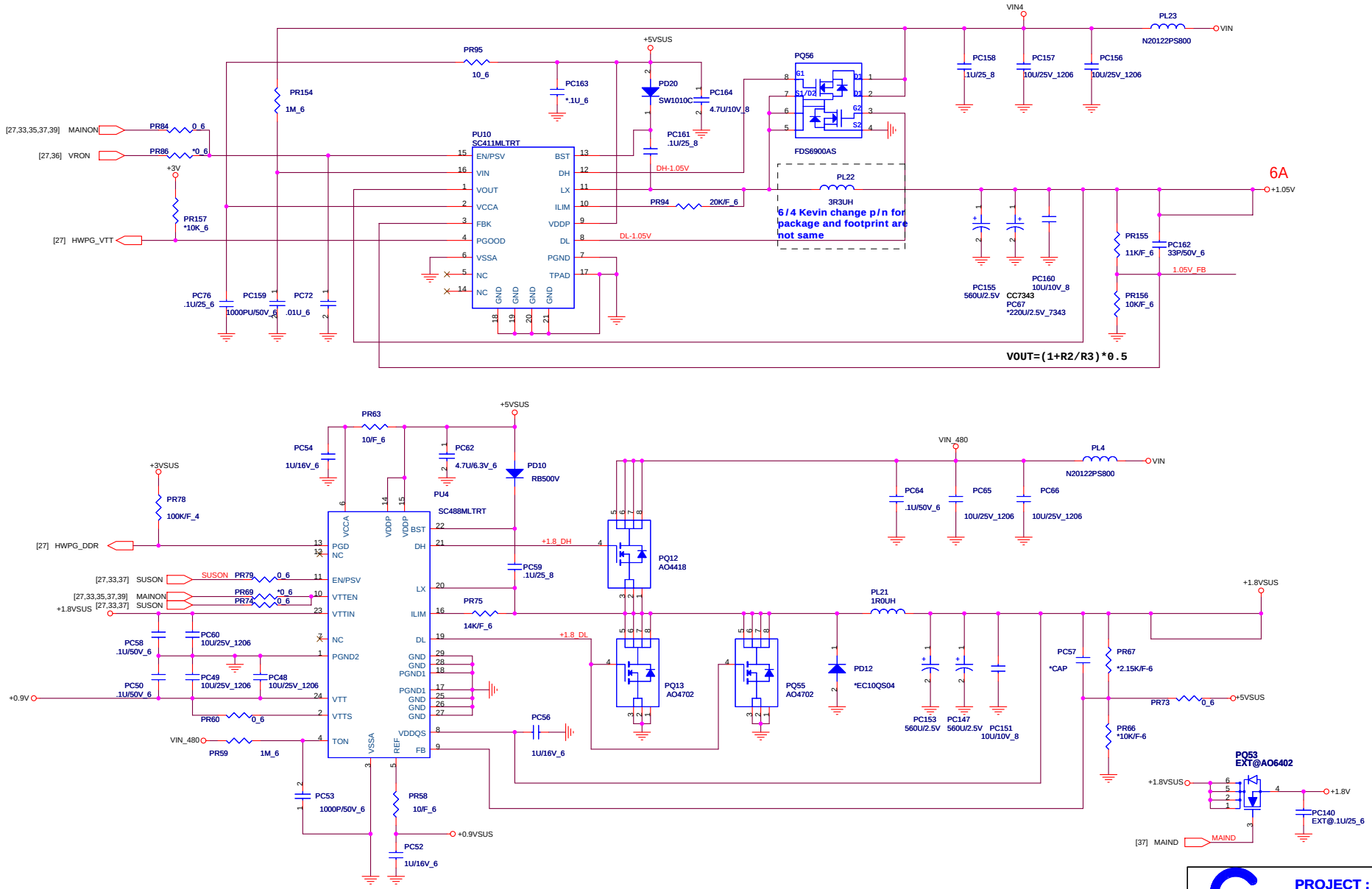

PROJECT : ZE2
Quanta Computer Inc.

Size	Document Number	Rev
	1.8VSUS/1.05V	B2A

Date: Friday, June 09, 2006 Sheet 38 of 42

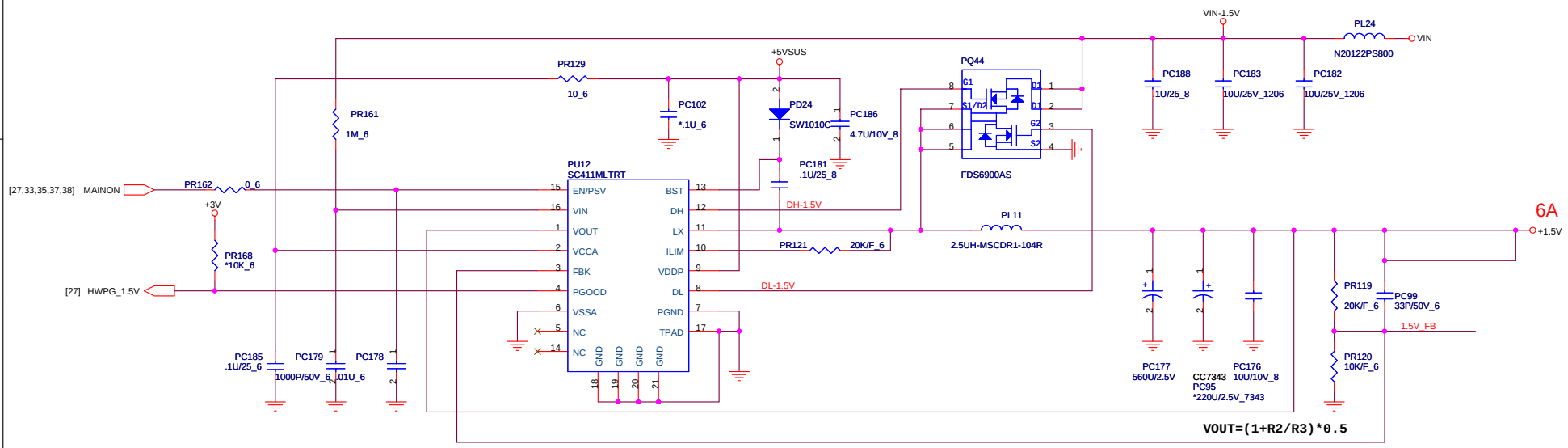

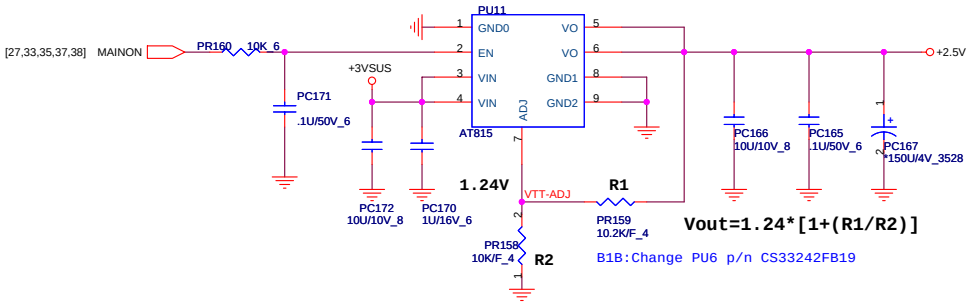

PROJECT : ZE2
Quanta Computer Inc.

Size	Document Number	Rev
	+1.5V / +2.5V	D2B

Date: Thursday, June 08, 2006 Sheet 39 of 42

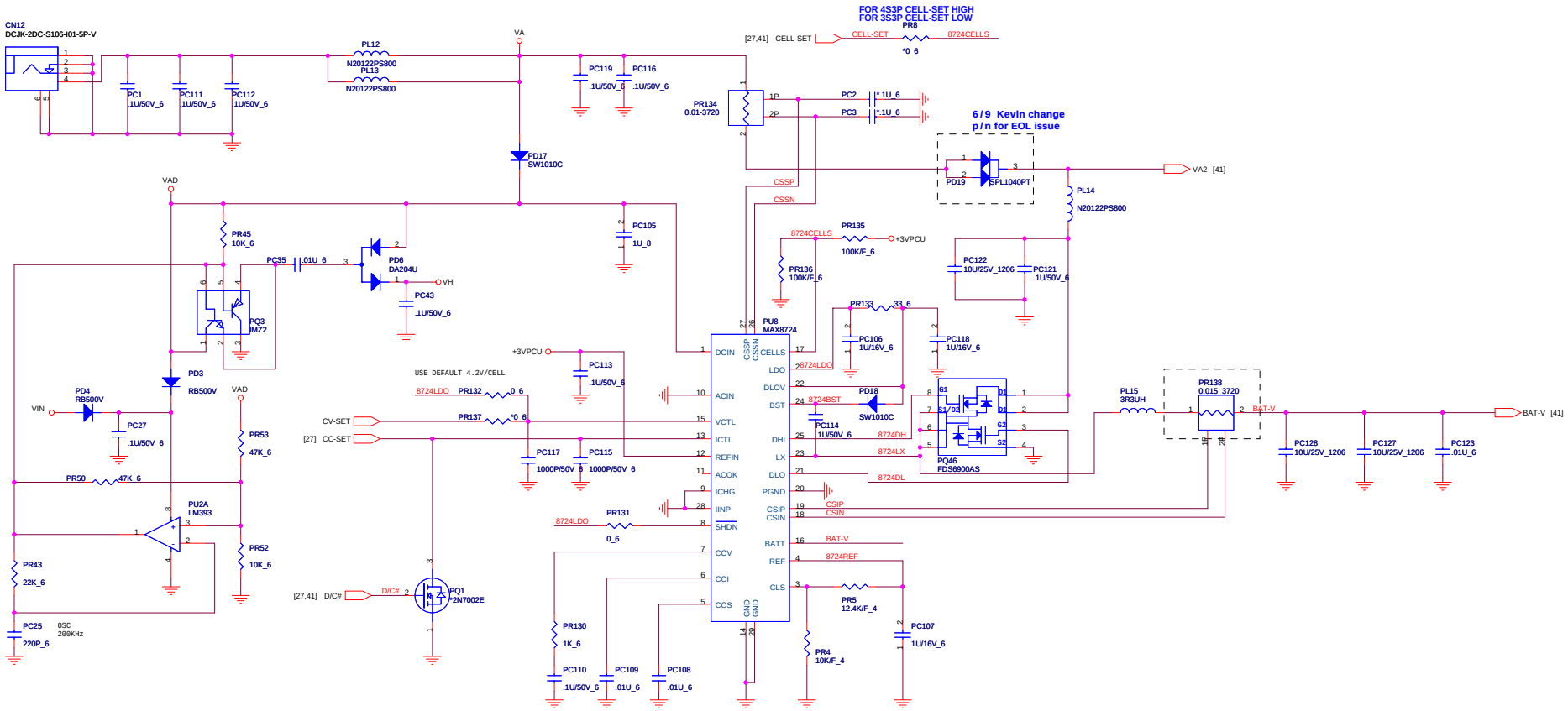

CURRNT LIMIT POINT = 3.4A

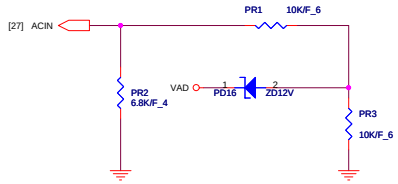

<OrgName>	PROJECT : ZE2	
<OrgAddr1> <OrgAddr2> <OrgAddr3> <OrgAddr4>	Quanta Computer Inc.	
Size	Document Number: BATTERY CHARGER	Rev: D2B
Date: Friday, June 09, 2006	Sheet 40 of 42	

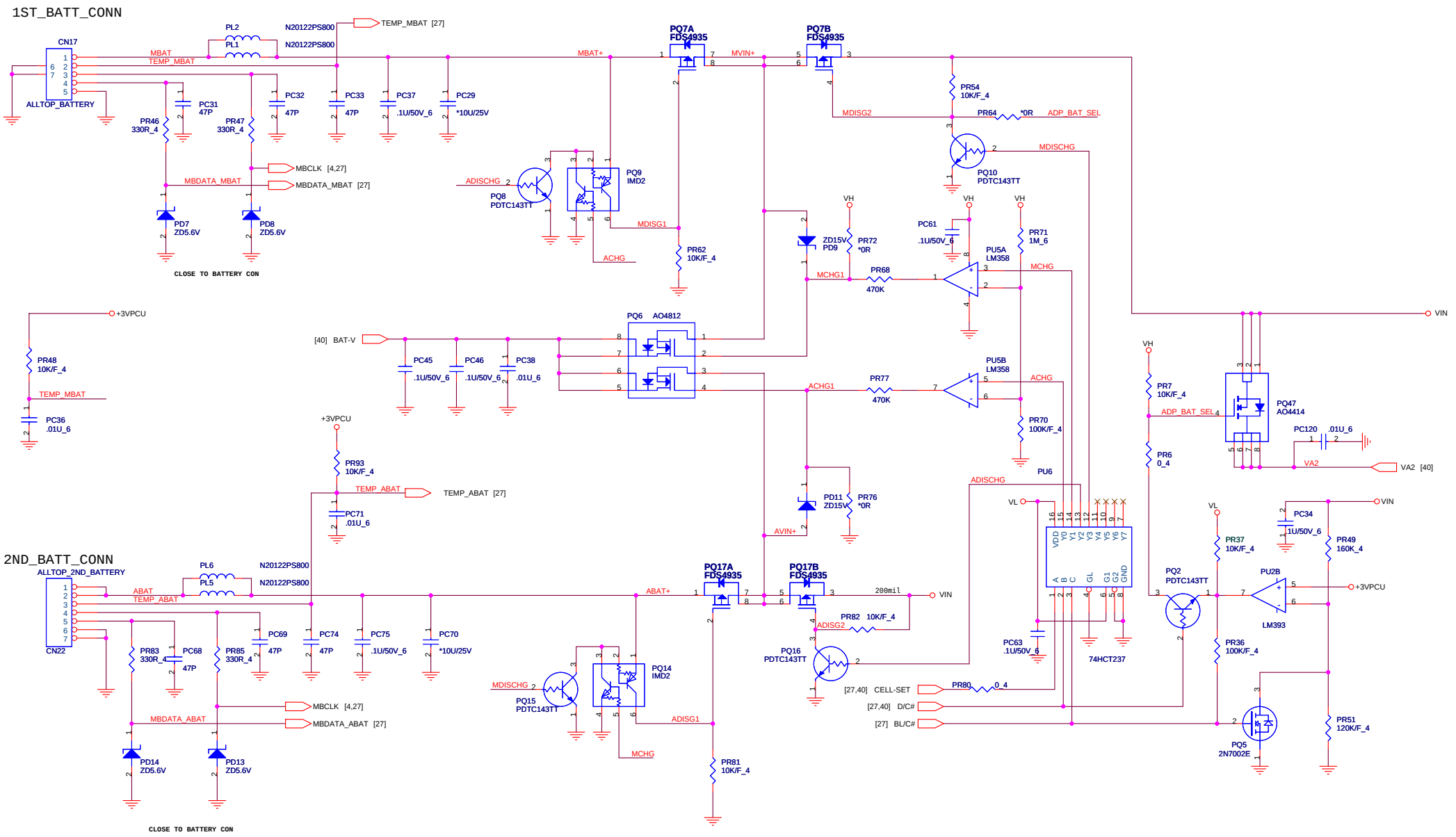

PROJECT : ZE2

Quanta Computer Inc.

Size	Document Number	Rev
	BATTERY SELECT	D2B

Date: Thursday, June 08, 2006 Sheet 41 of 42

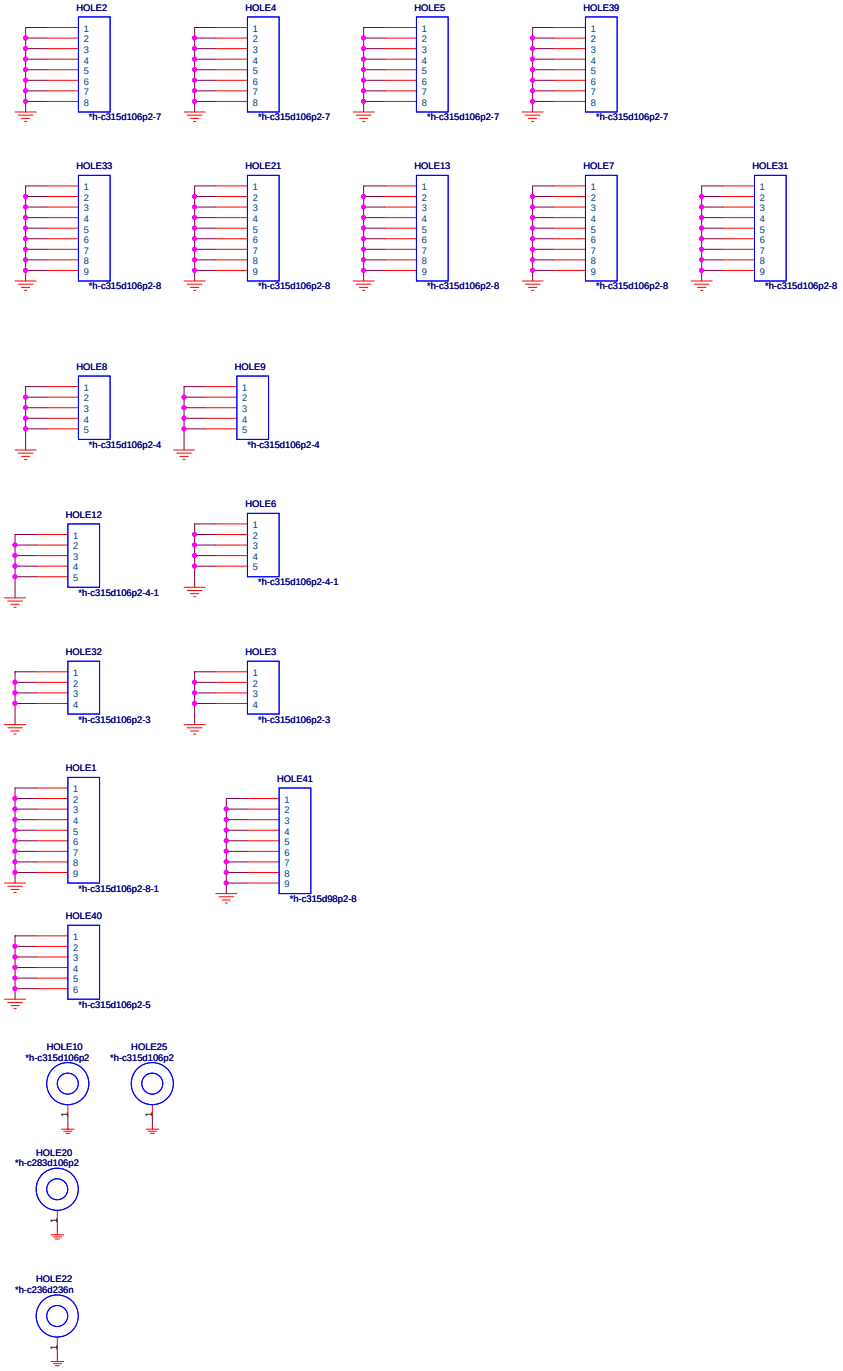

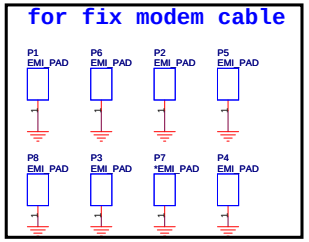

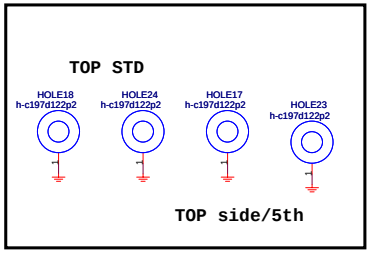

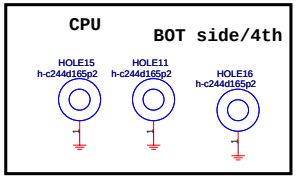

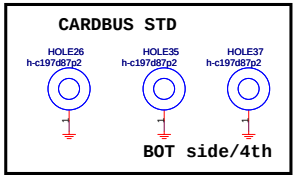

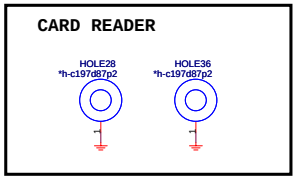

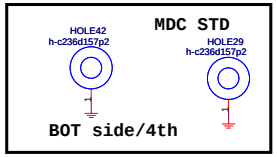

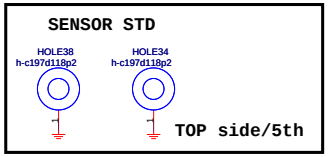

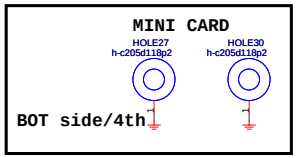

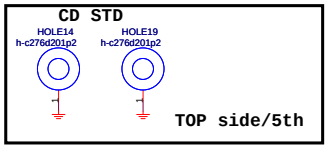

PROJECT : ZE2

Quanta Computer Inc.

Size	Document Number	Rev
		D2B

Date: Thursday, June 08, 2006 Sheet 42 of 42