Schematics Page Index

01 List of Schematic
02 System Block Diagram
03 T20 Keyboard, USB, NAND, HSIC and X'tal
04 T20 UART, BB, Audio, SDIO and VDAC
05 T20 DDR and PCIE
06 T20 LCD, VI, MIPI and HDMI
07 T20 Power and Ground
08 SPI ROM, eMMC and TPM
09 DDR2 Rank0
10 DDR2 Rank1
11 LCD Connector
12 Audio Codec
13 Headphone Jack and Mute Circuit
14 External Microphone Jack
15 HDMI Connector
16 Speaker Connectors
17 USB Connector
18 WWAN Connector
19 SD/MMC Slot and Debug Connector
20 Touch Pad and Touch Screen
21 WLAN+BT Module
22 Camera Module Connector
23 Sensors
24 Battery Charge Controller
25 Keyboard and Switches
26 Power Block Diagram
27 DCIN and Battery Connector
28 Battery Charger
29 System 5V, 3.3V Power Source
30 PMIC for CPU
31 System 1.8V Power Source
32 Power Switch
33 Low Battery Detector & System OVP
34 Change Notice

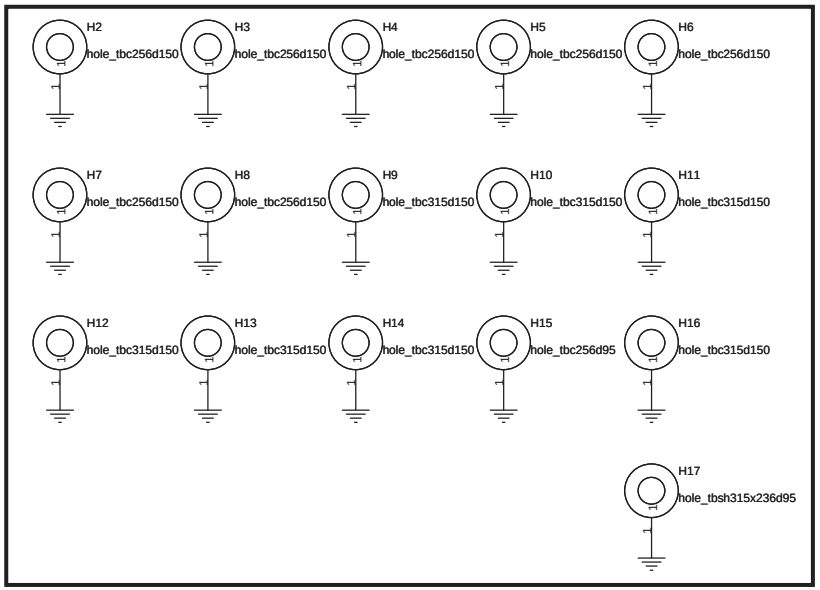

Title: List of Schematic		
Size: A3	Document Number	Rev: EVT
Date: Friday, February 11, 2011	Sheet 1 of 34	

System Block Diagram

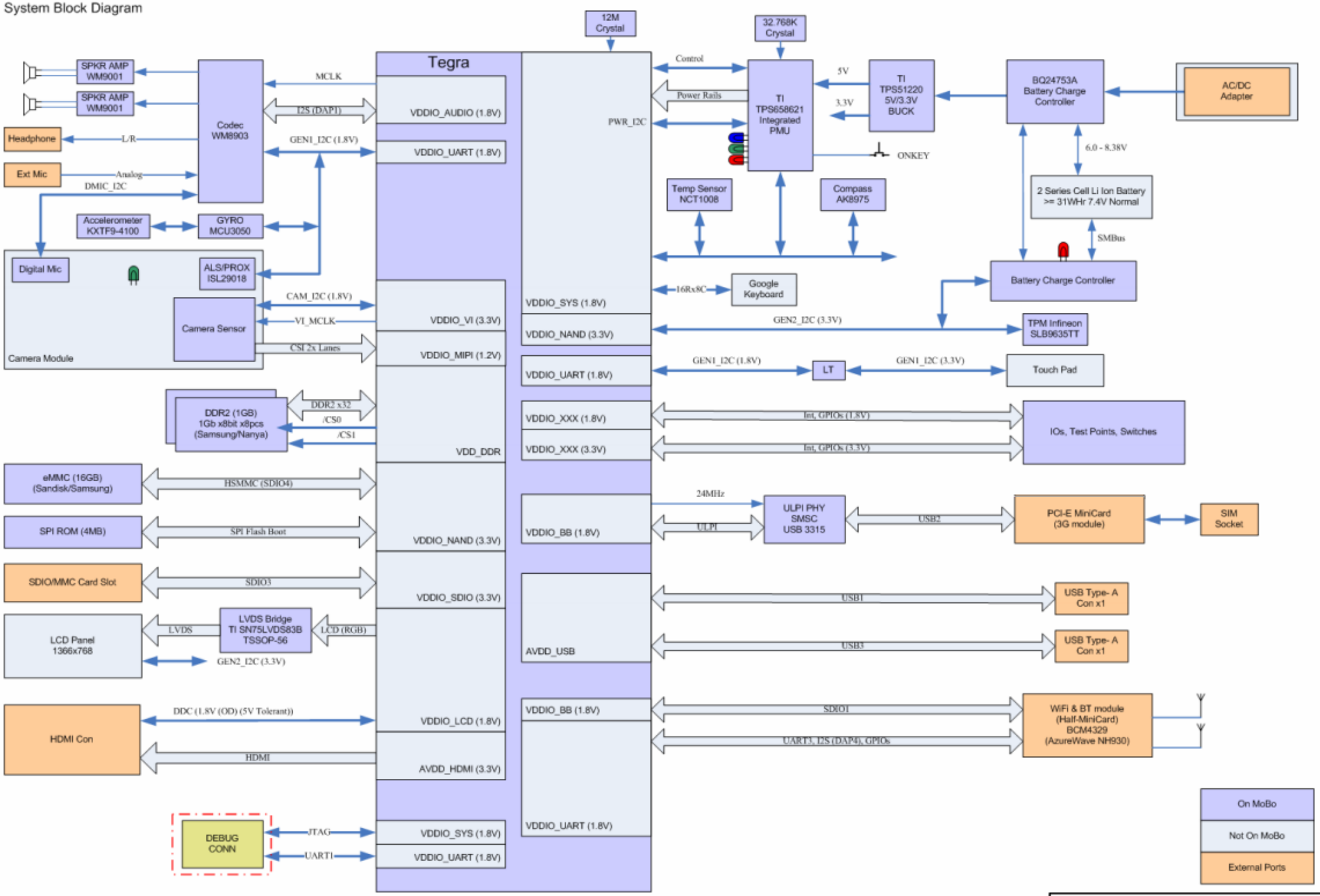

Title	System Block Diagram
Size A3	Document Number
Rev DV'	
Date: Friday, February 11, 2011	Sheet 2 of 34

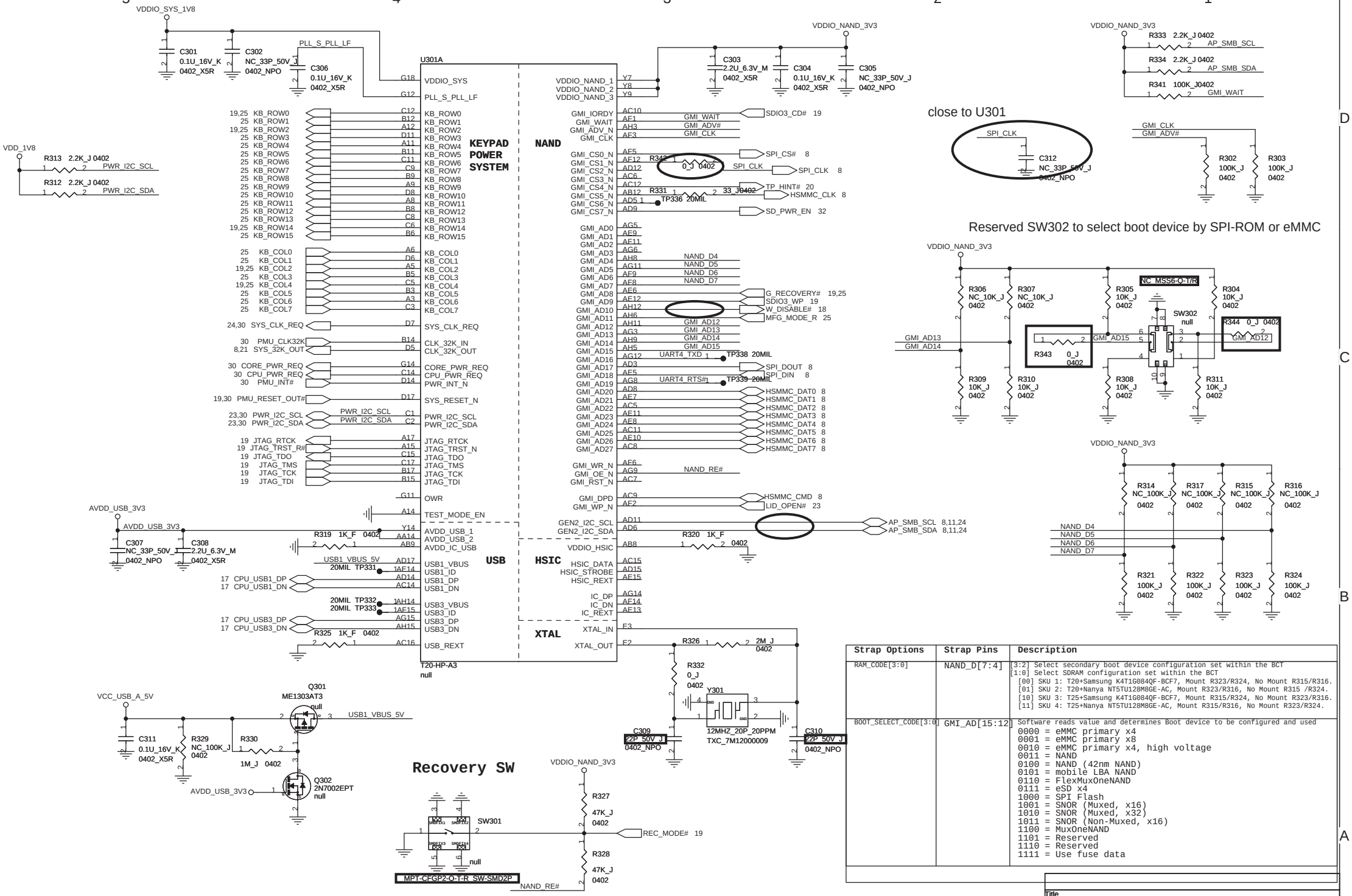

Strap Options	Strap Pins	Description
RAM_CODE[3:0]	NAND_D[7:4]	[3:2] Select secondary boot device configuration set within the BCT [1:0] Select SDRAM configuration set within the BCT [00] SKU 1: T20+Samsung K4T1G084QF-BCF7, Mount R323/R324, No Mount R315/R316. [01] SKU 2: T20+Nanya NT5TU128M8GE-AC, Mount R323/R316, No Mount R315 /R324. [10] SKU 3: T25+Samsung K4T1G084QF-BCF7, Mount R315/R324, No Mount R323/R316. [11] SKU 4: T25+Nanya NT5TU128M8GE-AC, Mount R315/R316, No Mount R323/R324.
BOOT_SELECT_CODE[3:0]	GMI_AD[15:12]	Software reads value and determines Boot device to be configured and used 0000 = eMMC primary x4 0001 = eMMC primary x8 0010 = eMMC primary x4, high voltage 0011 = NAND 0100 = NAND (42nm NAND) 0101 = mobile LBA NAND 0110 = FlexMuxOneNAND 0111 = eSD x4 1000 = SPI Flash 1001 = SNOR (Muxed, x16) 1010 = SNOR (Muxed, x32) 1011 = SNOR (Non-Muxed, x16) 1100 = MuxOneNAND 1101 = Reserved 1110 = Reserved 1111 = Use fuse data

Title: **T20 KB,USB,NAND,HSIC,XTAL**

Size: A3 | Document Number | Rev: DVT

Date: Friday, February 11, 2011 | Sheet 3 of 34

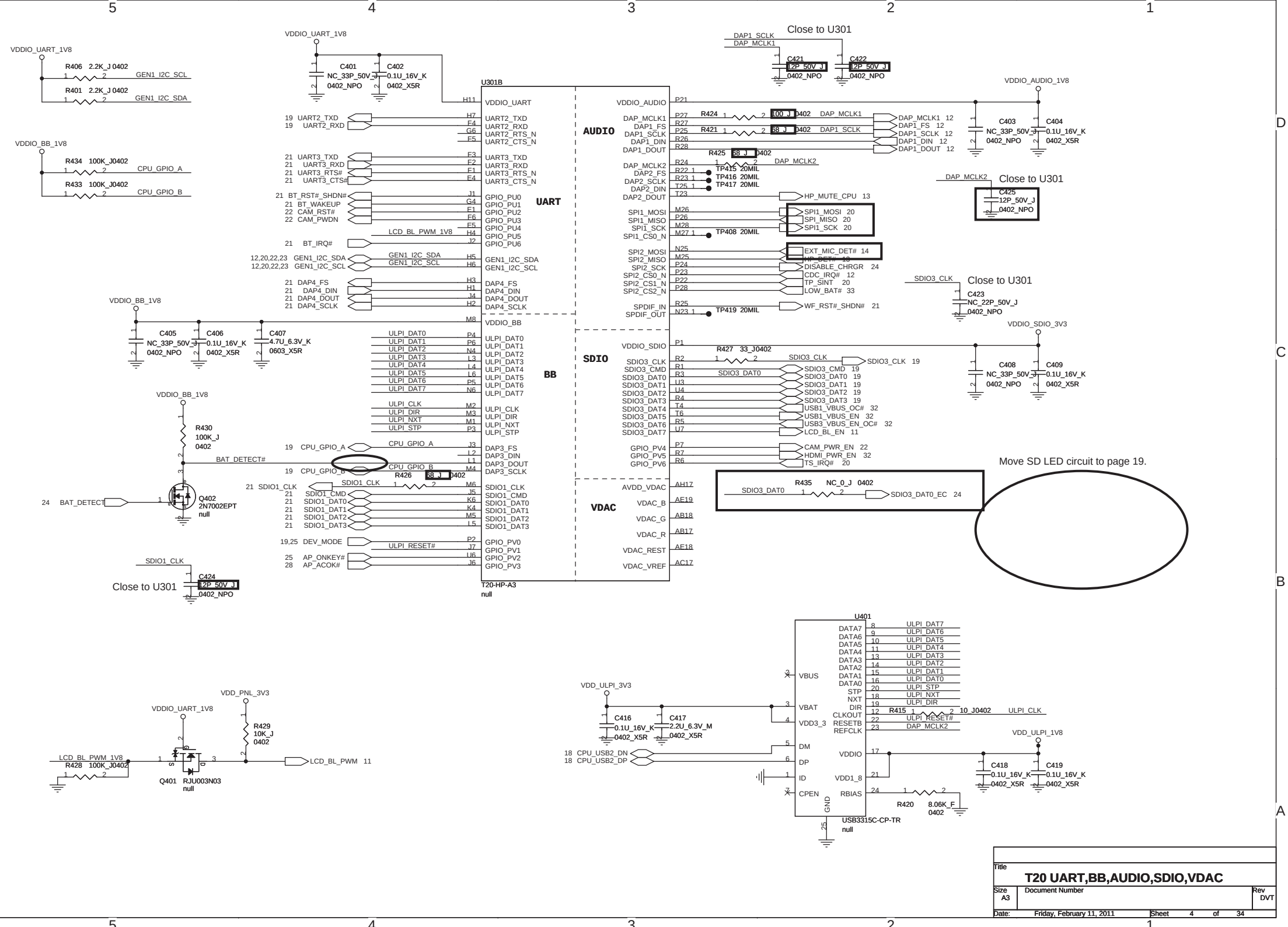
U301B
T20-HP-A3
null
UART
AUDIO
BB
SDIO
VDAC
VDDIO_UART_1V8
VDDIO_BB_1V8
VDDIO_AUDIO_1V8
VDDIO_SDIO_3V3
VDD_PNL_3V3
VDD_ULPI_3V3
VDD_ULPI_1V8
Close to U301
Move SD LED circuit to page 19.
U401
USB3315C-CP-TR
null
Q402
2N7002EPT
null
Q401 RJU003N03
null
LCD_BL_PWM_1V8
BAT_DETECT#
BAT_DETECT
LCD_BL_PWM 11
T20 UART,BB,AUDIO,SDIO,VDAC
Title
Size A3
Document Number
Rev DVT
Date: Friday, February 11, 2011
Sheet 4 of 34

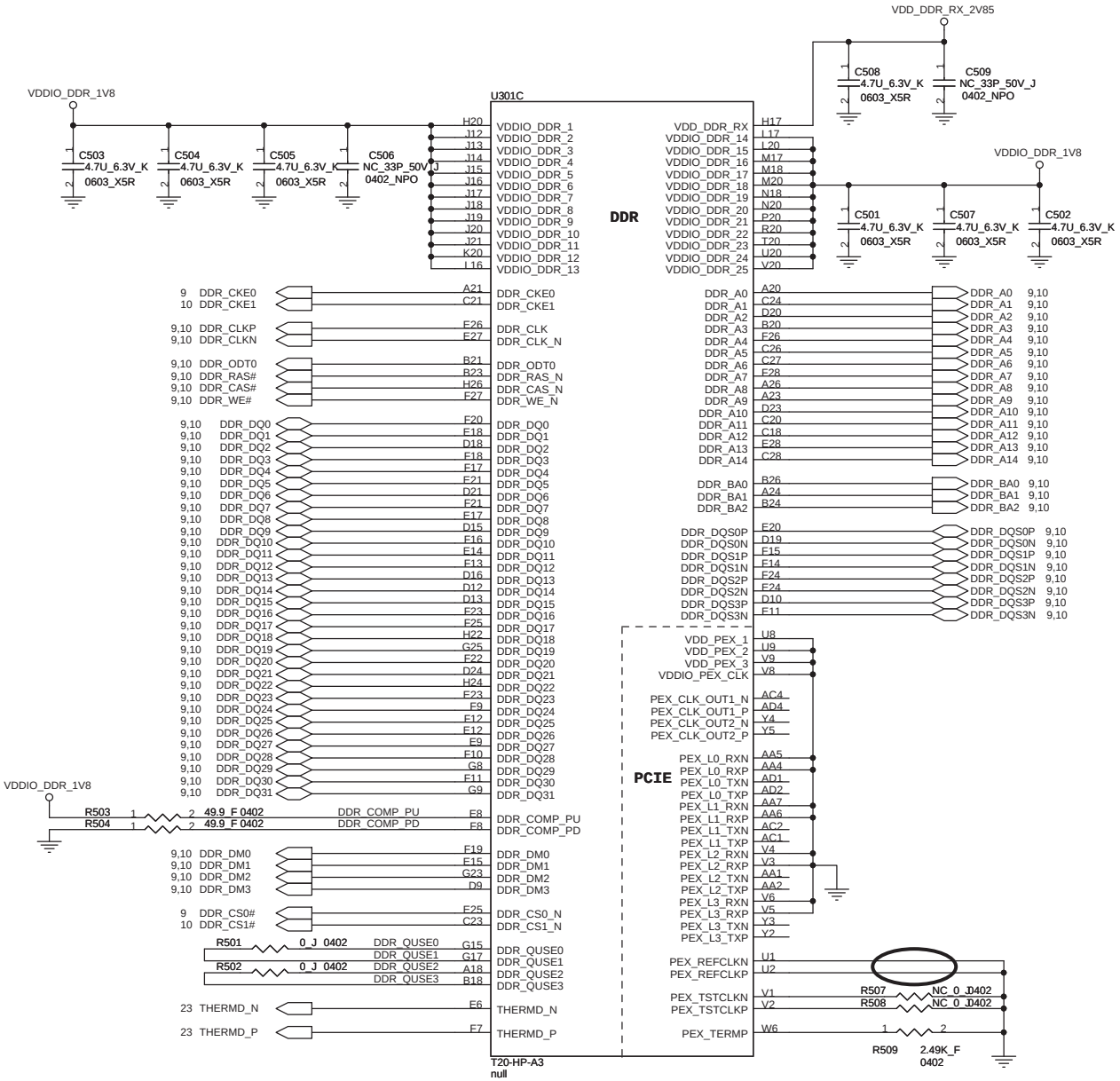

Title
T20 DDR & PCIE

Size	Document Number	Rev
A3		DVT

Date: Friday, February 11, 2011 Sheet 5 of 34

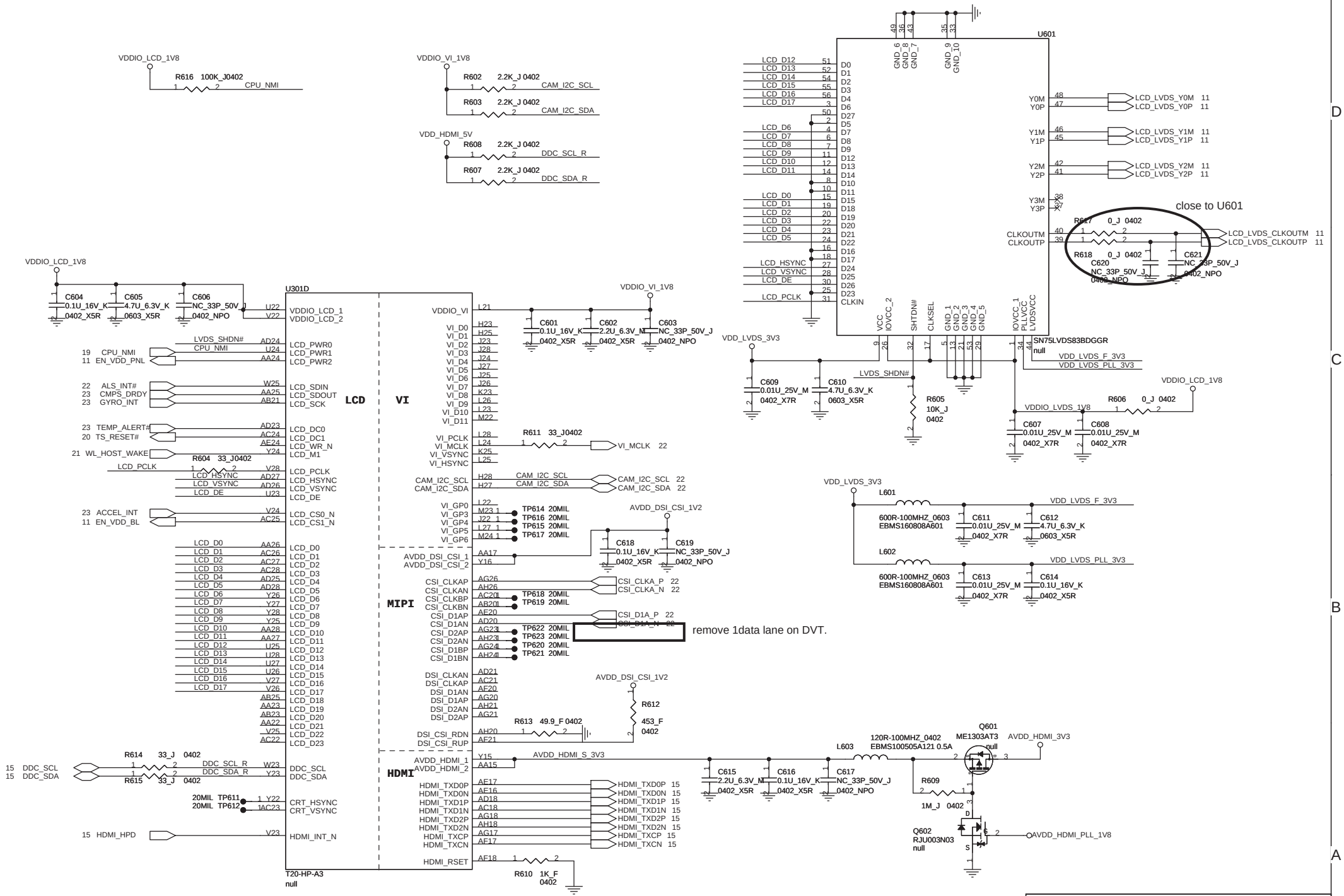

Title
T20 LCD, VI, MIPI, HDMI

Size	Document Number	Rev
A3		DVT

Date: Friday, February 11, 2011 Sheet 6 of 34

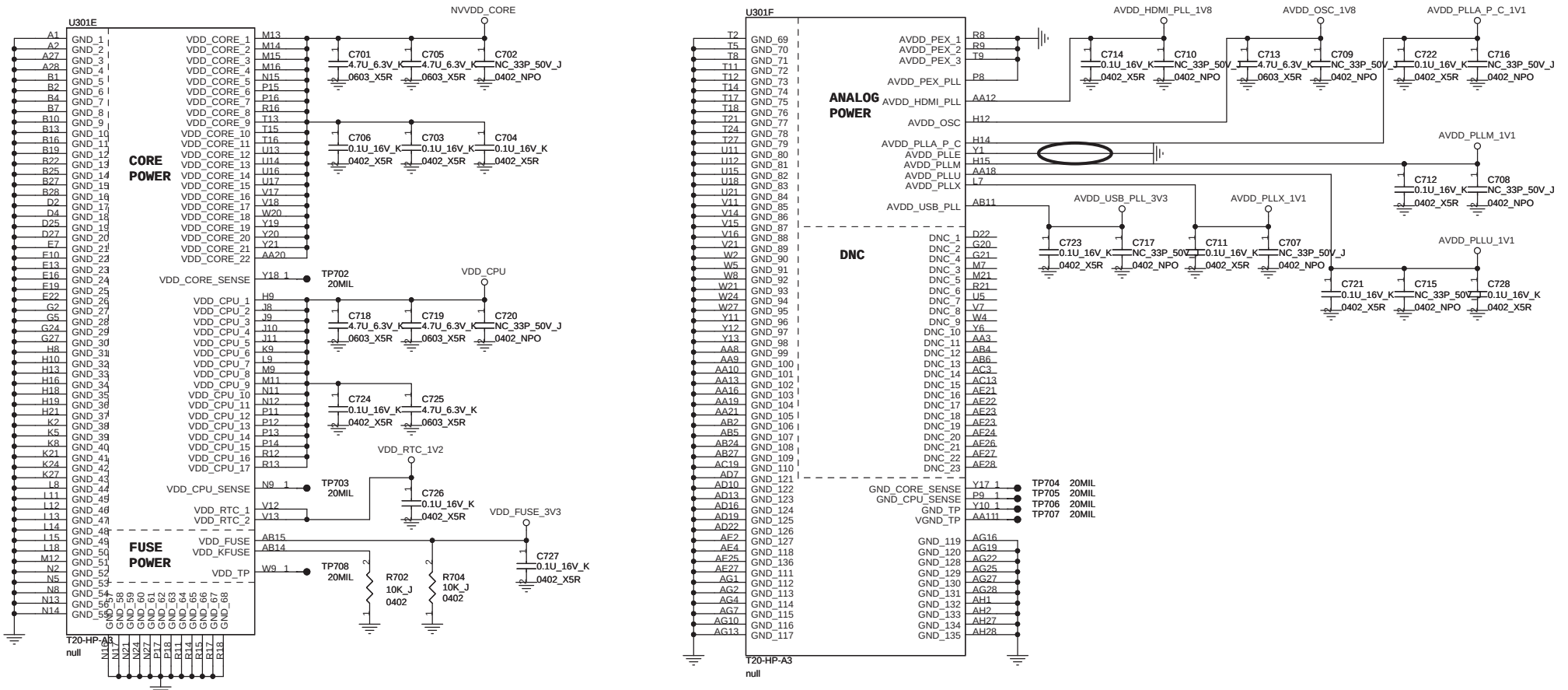

Title	T20 POWER
Size A3	Document Number
Rev DVT	
Date: Friday, February 11, 2011	Sheet 7 of 34

16GB eMMC

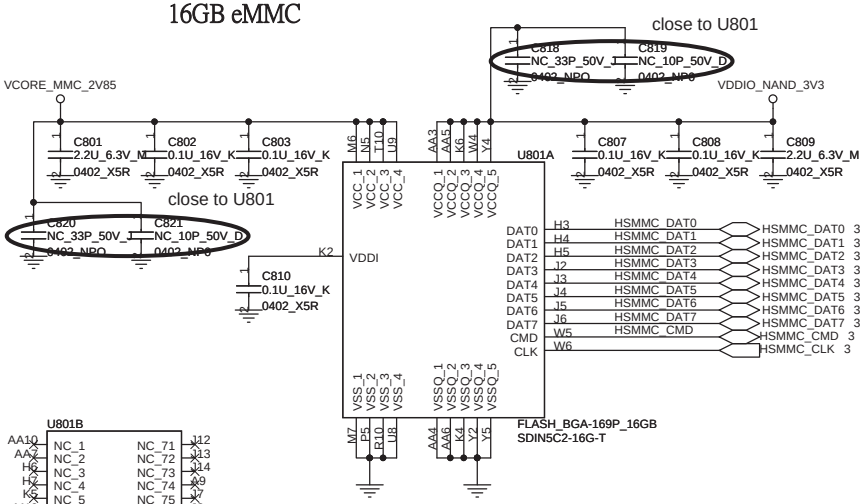

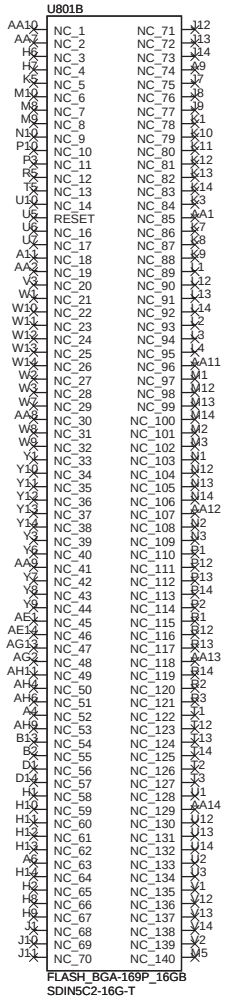

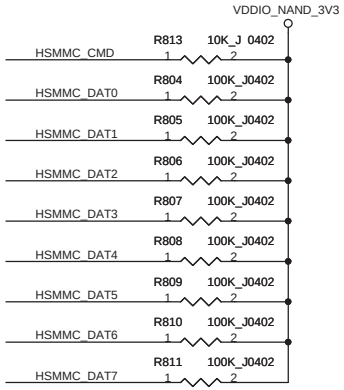

TPM

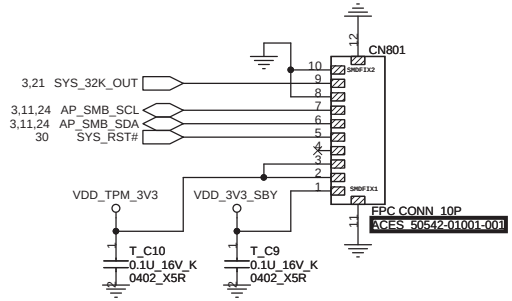

SPI ROM

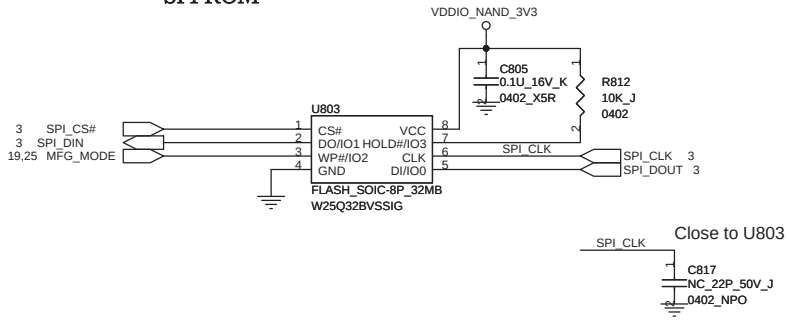

Title	SPI ROM, eMMC and TPM	
Size A3	Document Number	Rev DVT
Date: Friday, February 11, 2011	Sheet 8 of 34	

rank0

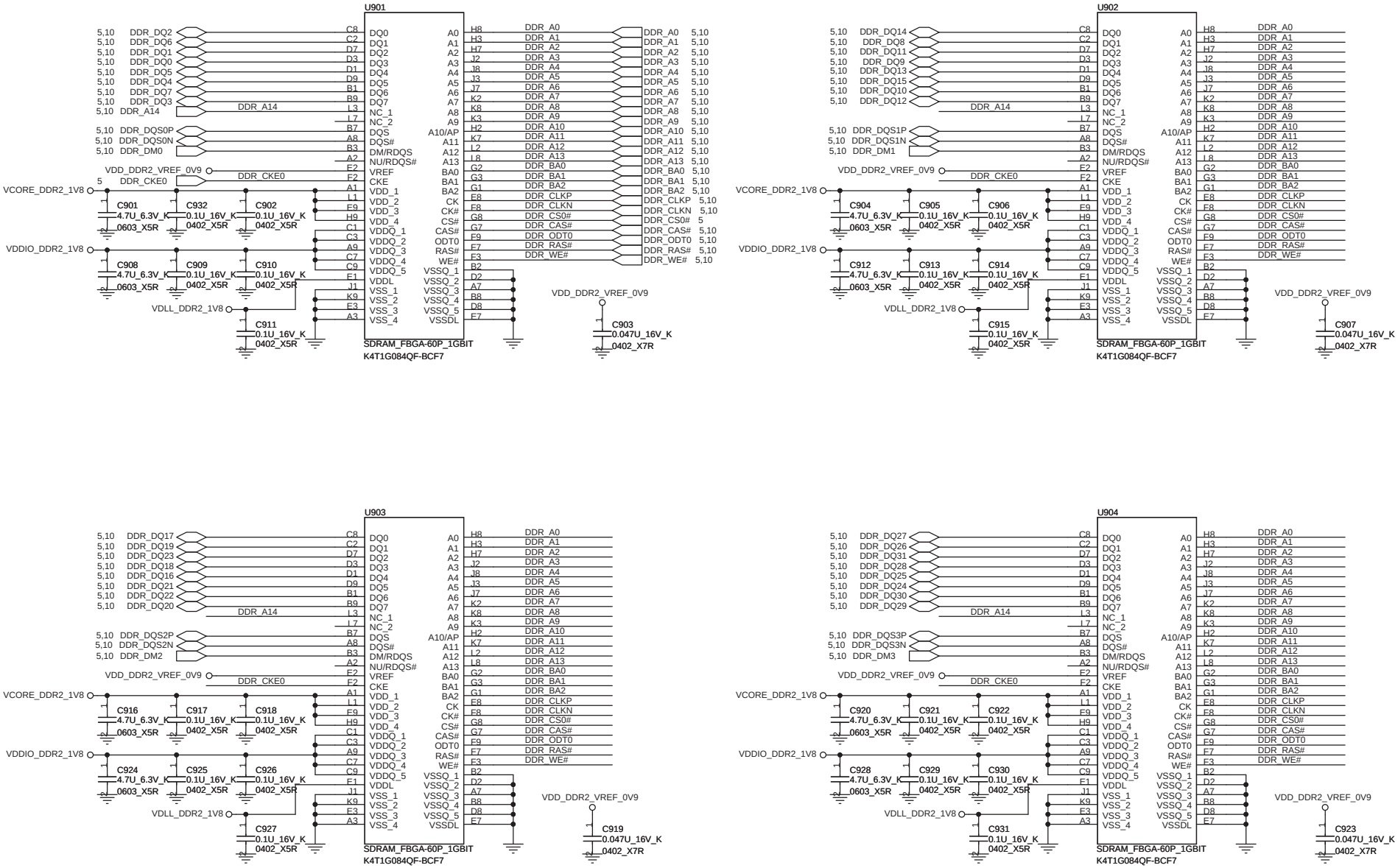

Title	**DDR2 Rank0**
Size A3	Document Number
Rev	DVT
Date:	Friday, February 11, 2011
Sheet	9 of 34

rank1

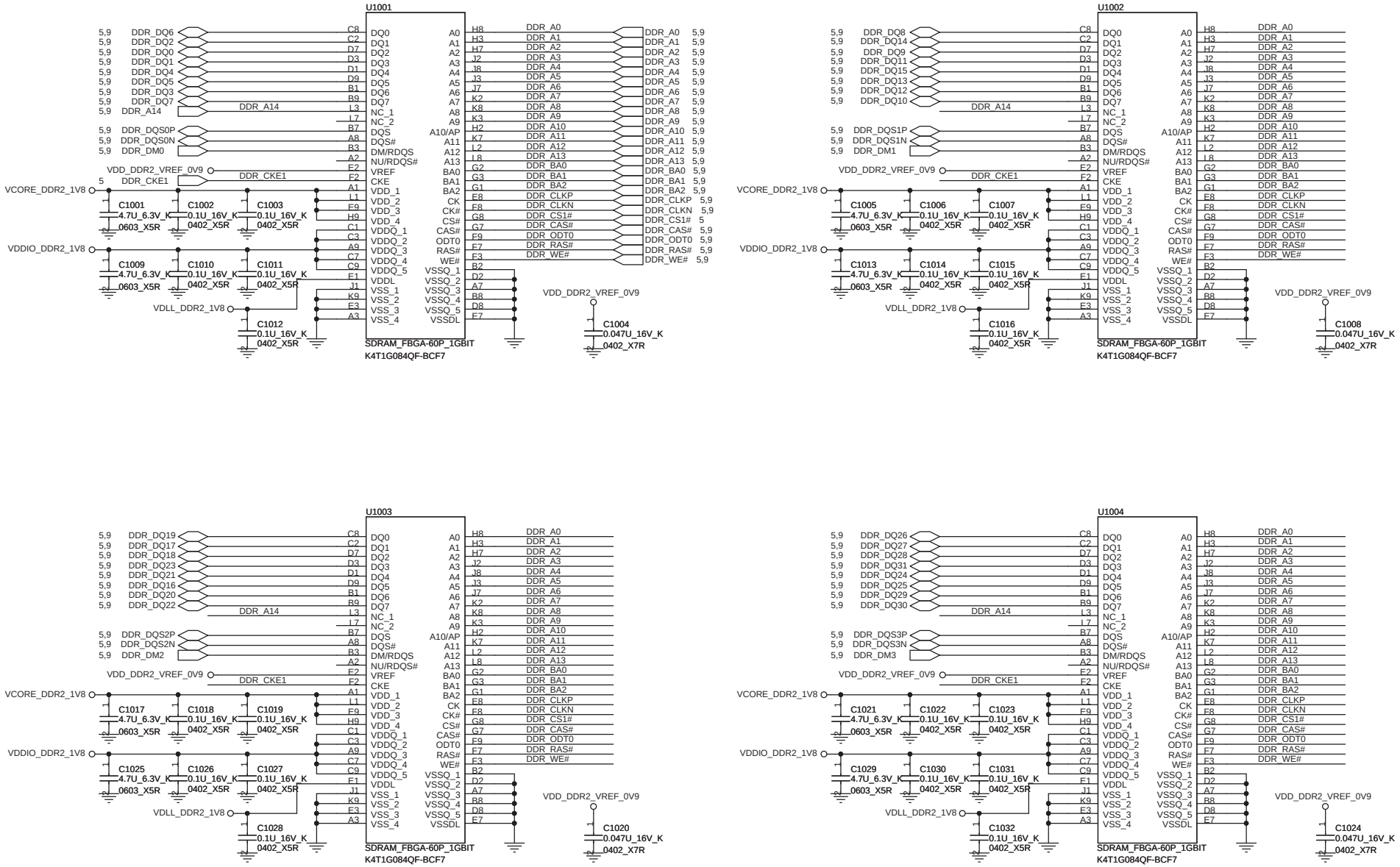

Title	DDR2 Rank1	
Size A3	Document Number	Rev DVT
Date: Friday, February 11, 2011	Sheet 10 of 34	

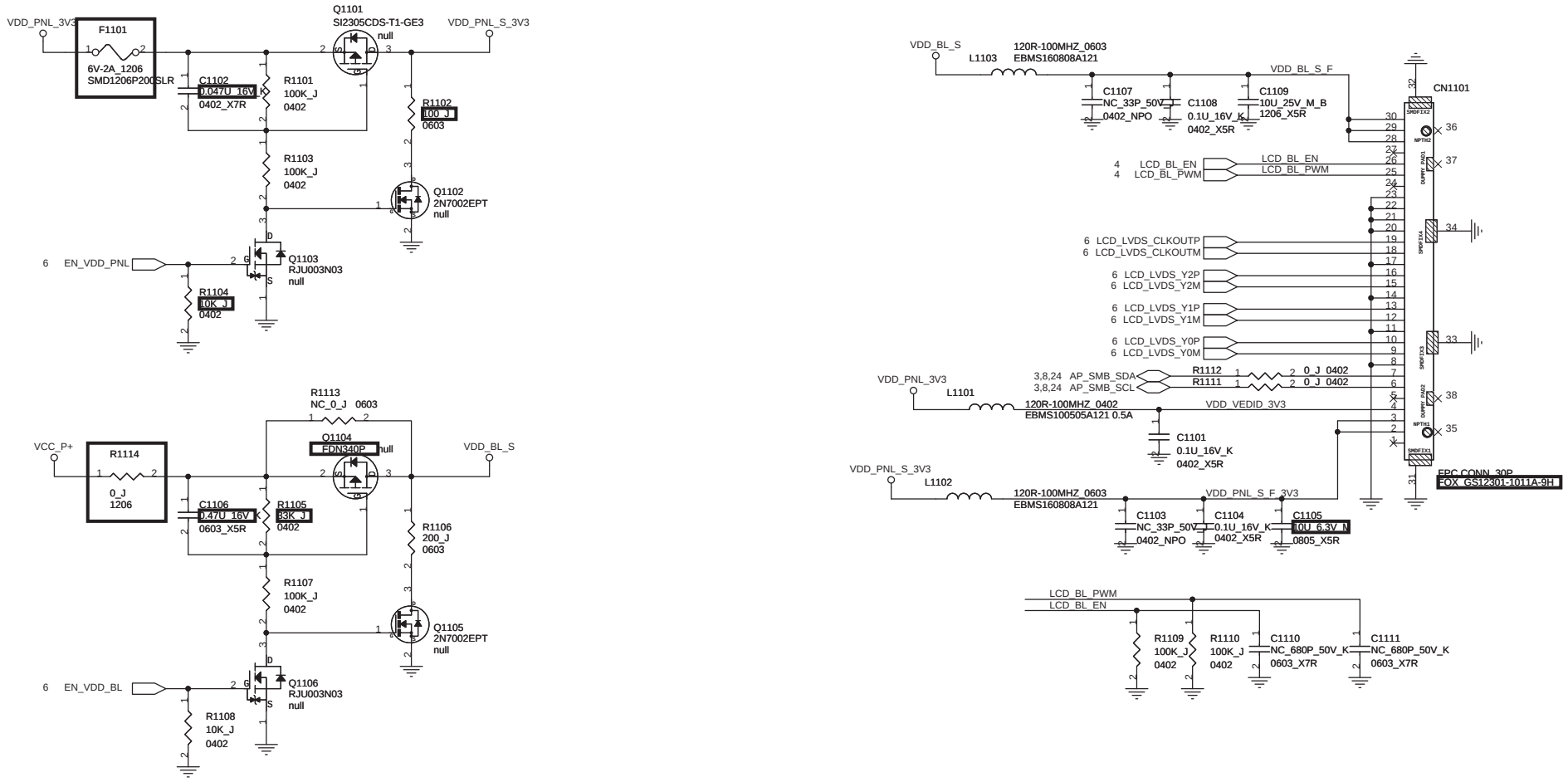

Title	**LCD Connector**
Size A3	Document Number
Rev	DVT
Date:	Friday, February 11, 2011
Sheet	11 of 34

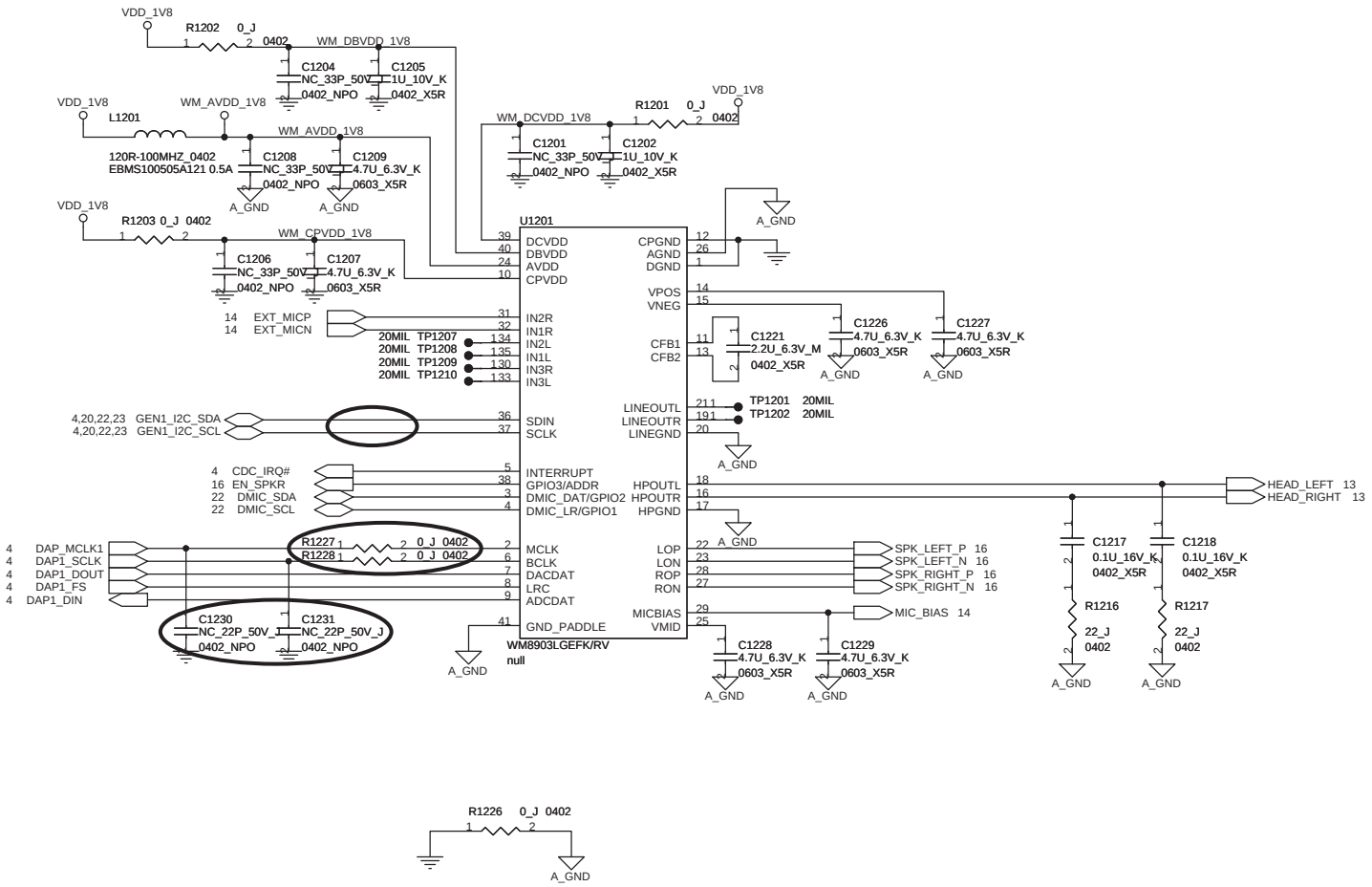

Title	**Audio Codec**
Size A3	Document Number
Rev DVT	
Date: Friday, February 11, 2011	Sheet 12 of 34

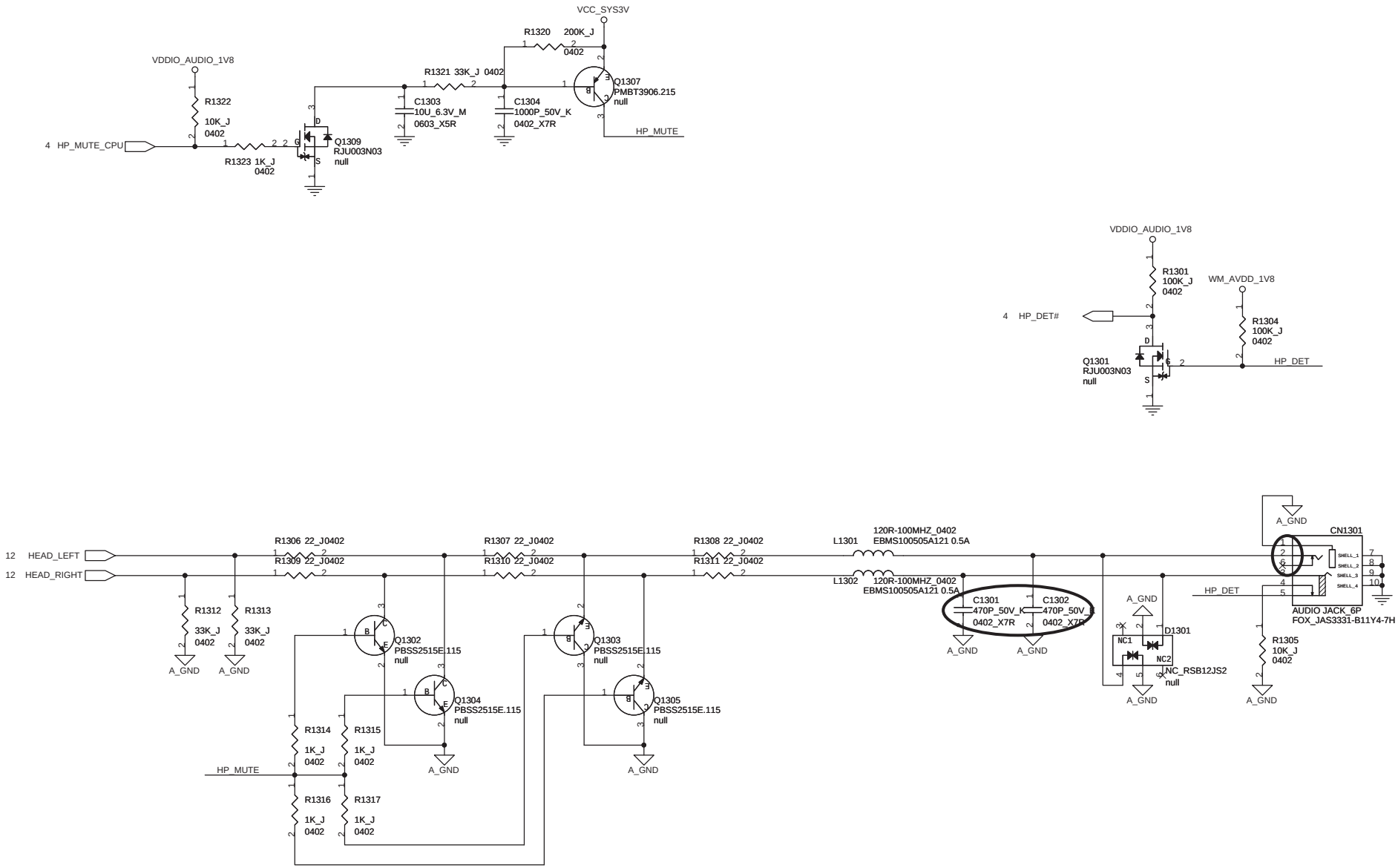

Title	**Headphone Jack and Mute Circuit**
Size A3	Document Number
Rev DVT	
Date: Friday, February 11, 2011	Sheet 13 of 34

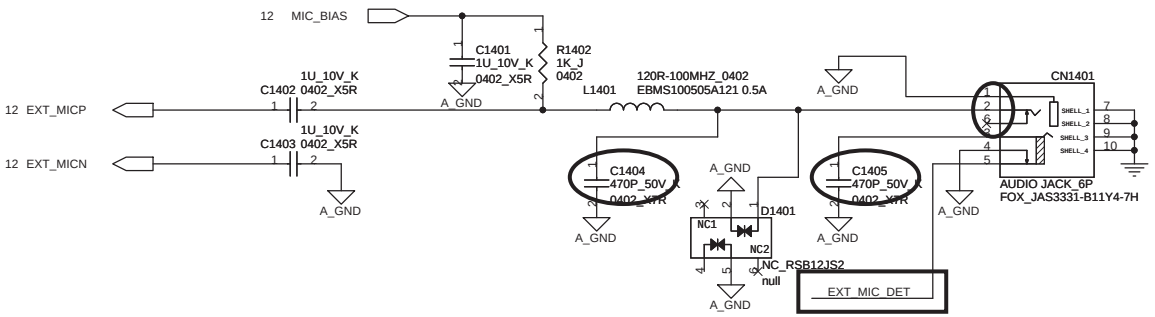

Seaboard does not support this function.

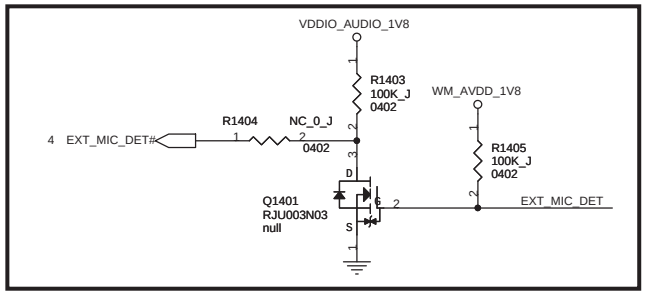

Title	**External Microphone**	
Size A3	Document Number	Rev DVT
Date: Friday, February 11, 2011	Sheet 14 of 34	

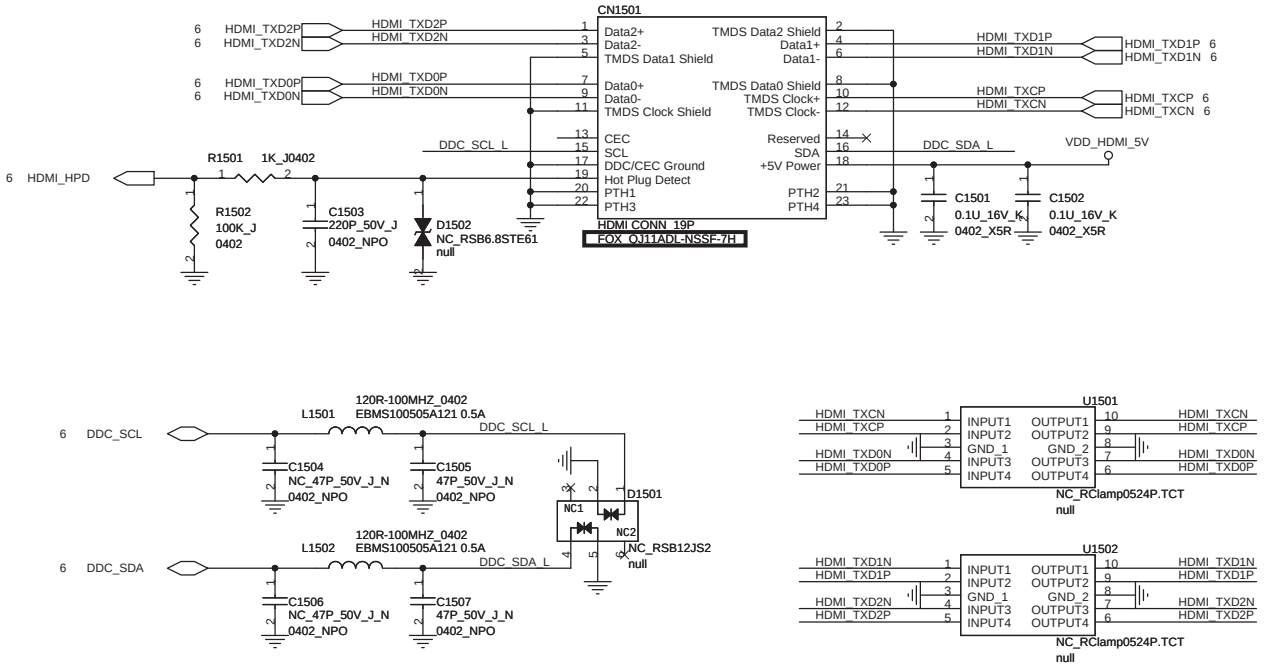

Title	**HDMI Connector**
Size A3	Document Number
Rev DVT	
Date: Friday, February 11, 2011	Sheet 15 of 34

Set current limit on 750mA~1250mA

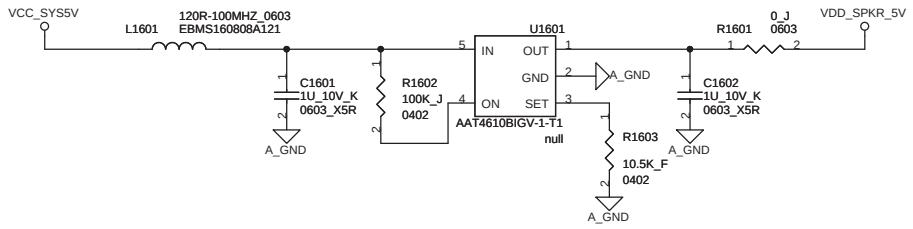

Left Speaker

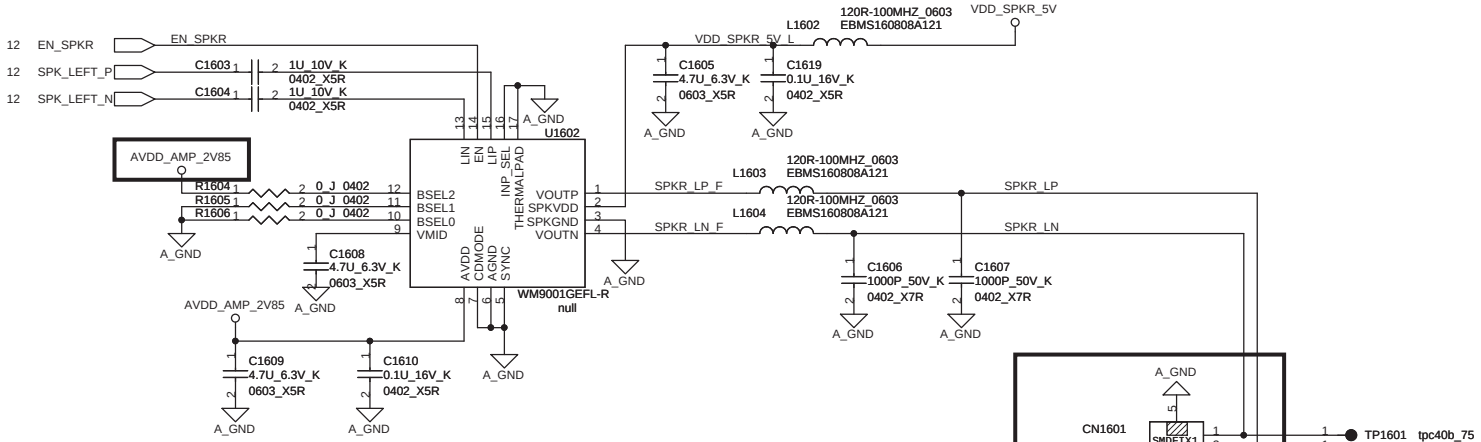

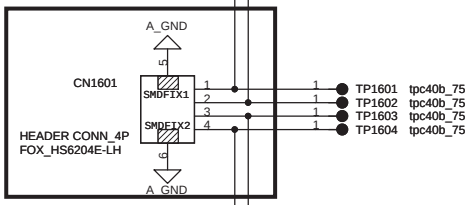

Right Speaker

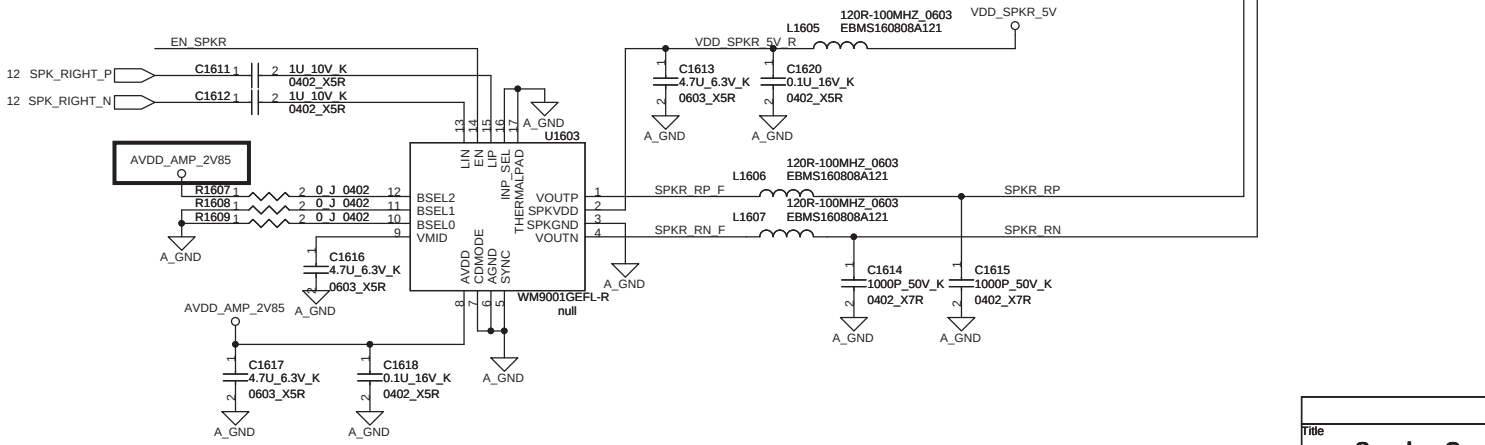

Title	**Speaker Connectors**	
Size A3	Document Number	Rev DVT
Date: Friday, February 11, 2011	Sheet 16 of 34	

use a special A-A cable for USB Recovery mode support

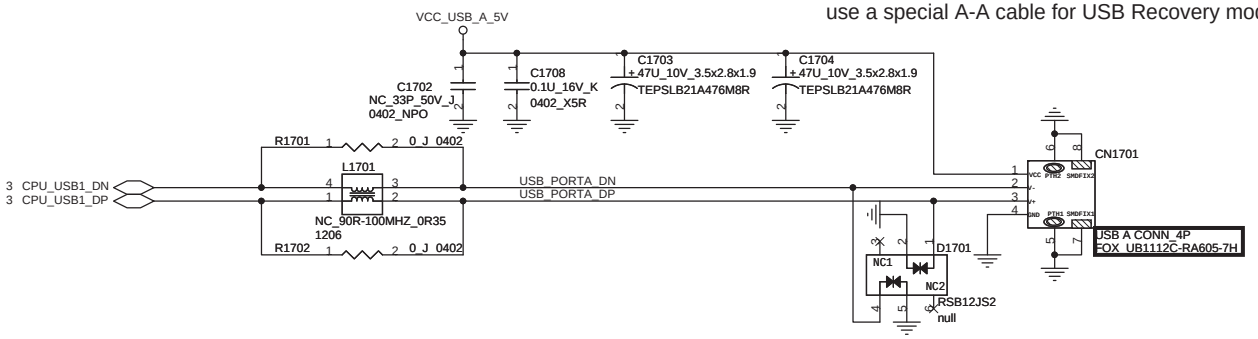

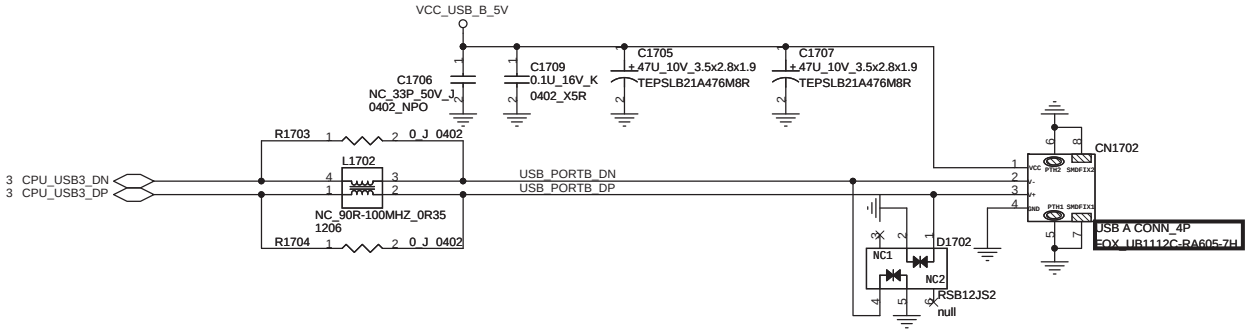

Title	**USB Connectors**	
Size A3	Document Number	Rev DVT
Date: Friday, February 11, 2011	Sheet 17 of 34	

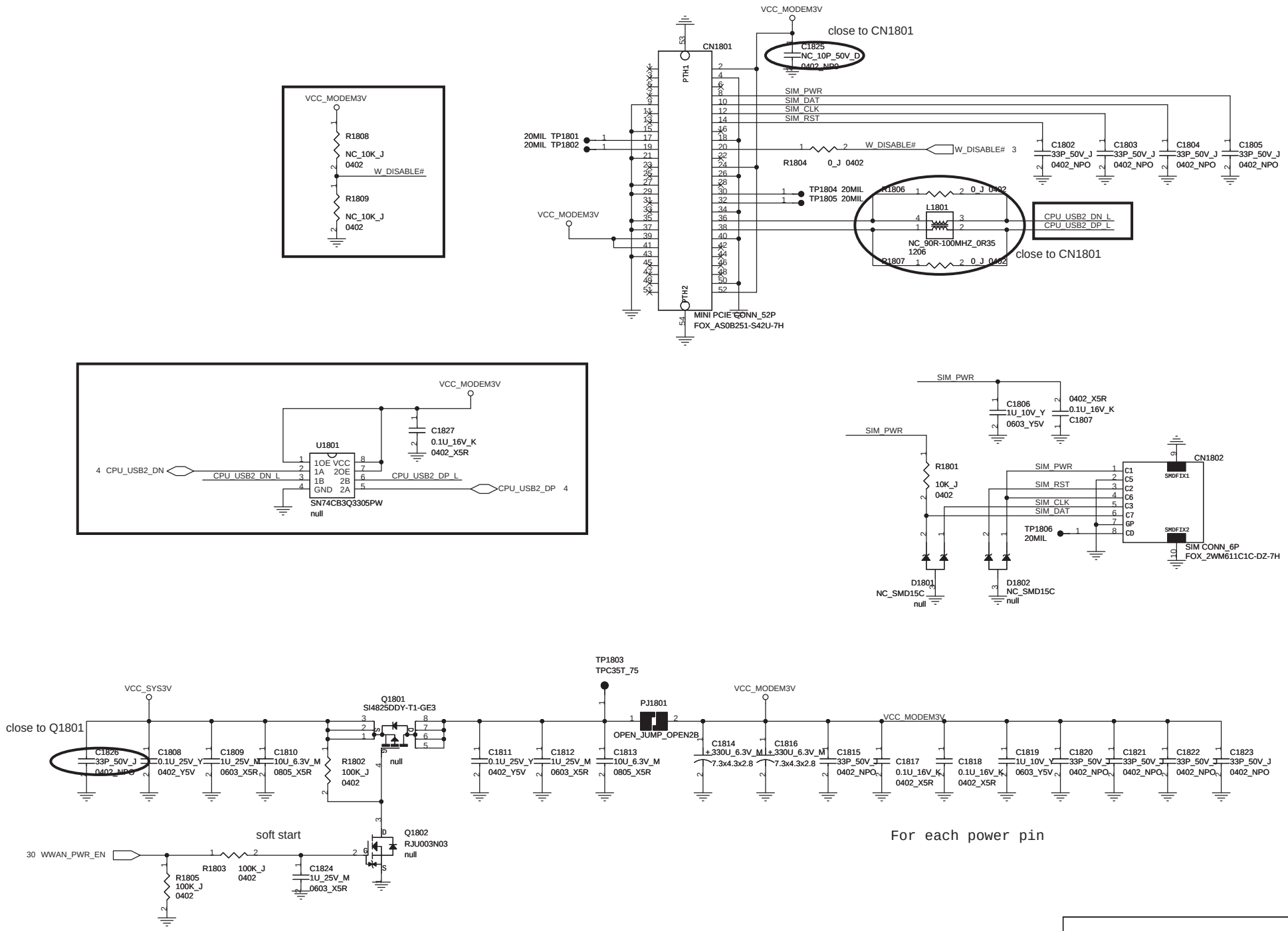

Title	**WWAN Connector**
Size A3	Document Number
Rev DVT	
Date: Friday, February 11, 2011	Sheet 18 of 34

SD/MMC Slot

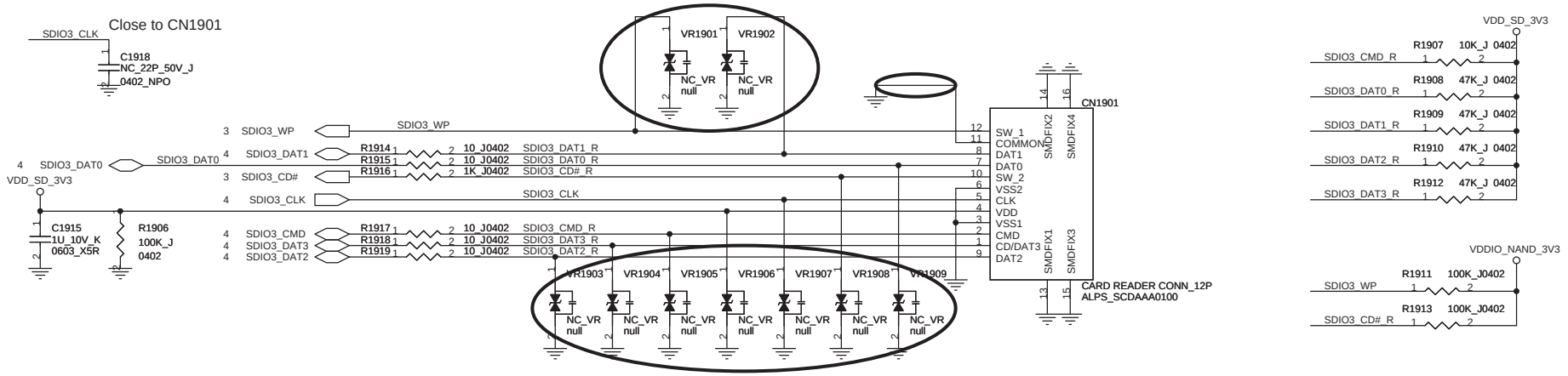

Use HW circuit to blink this LED.

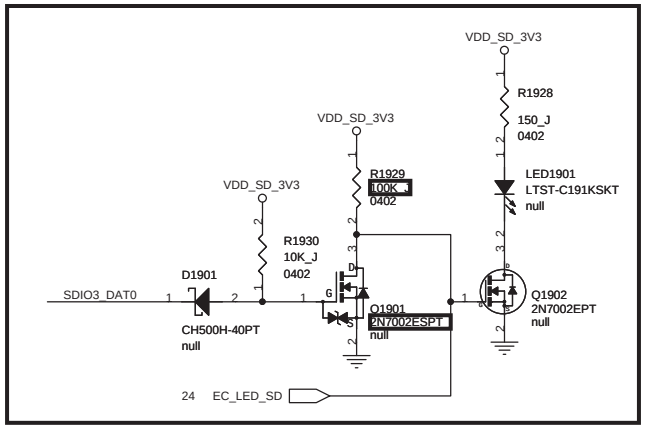

Debug Connector

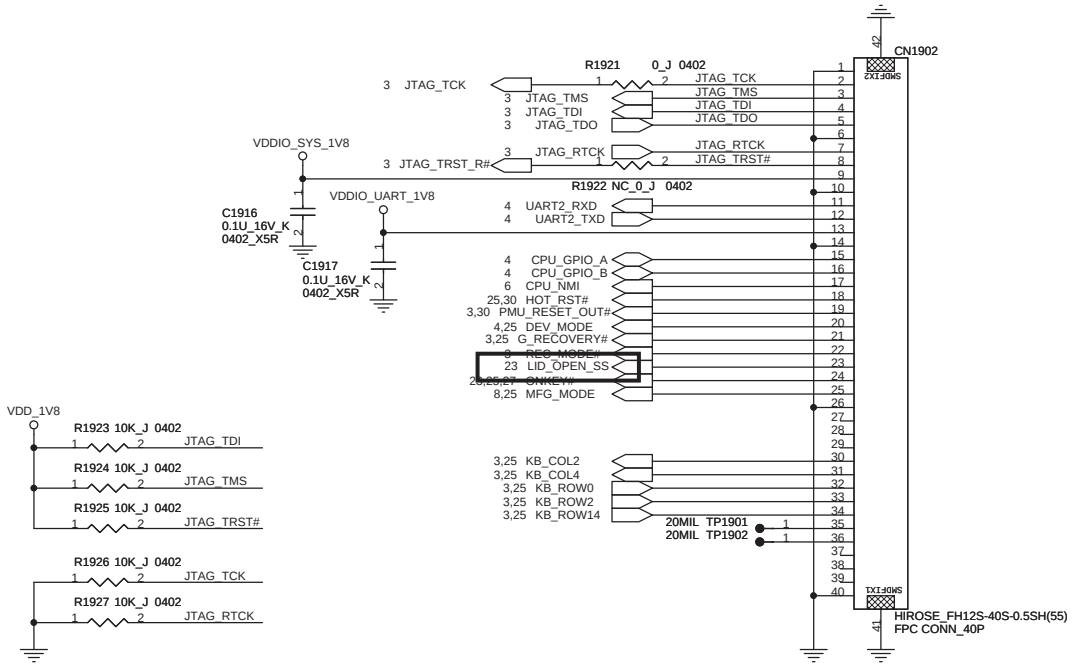

Title	SD/MMC Slot and Debug Connector	
Size A3	Document Number	Rev DVT
Date: Friday, February 11, 2011	Sheet 19 of 34	

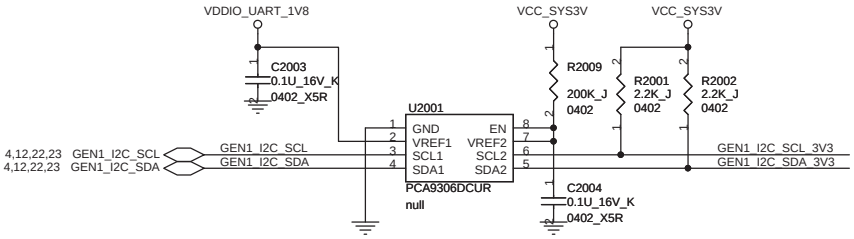

Reserved for test.

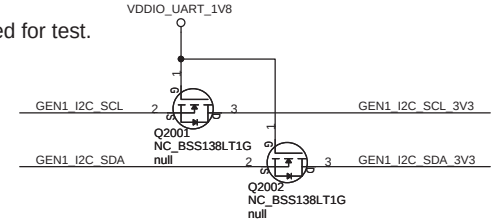

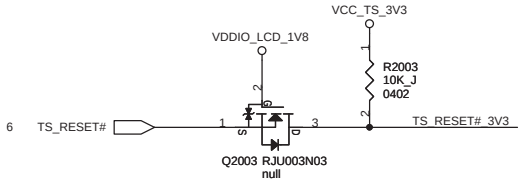

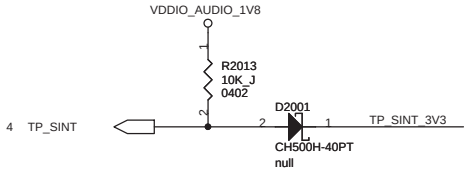

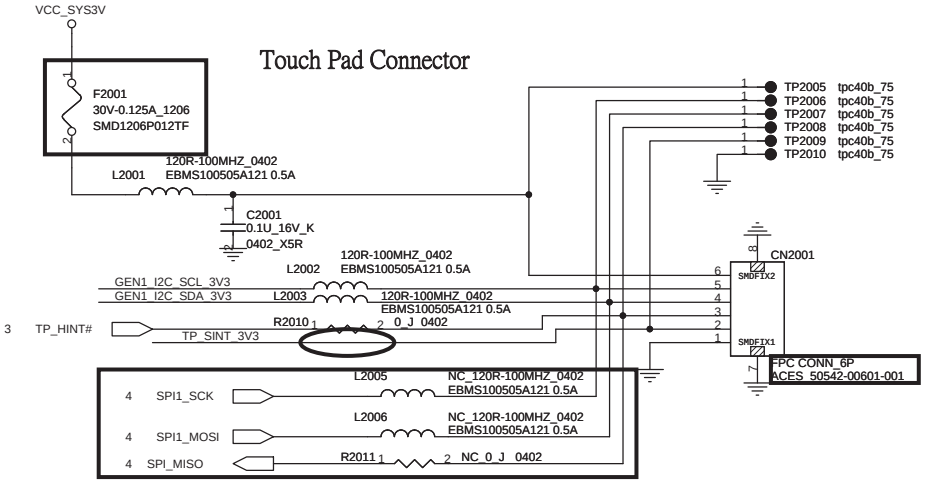

Reserved for SPI Touch pad

It is only evaluation

Touch Screen Connector

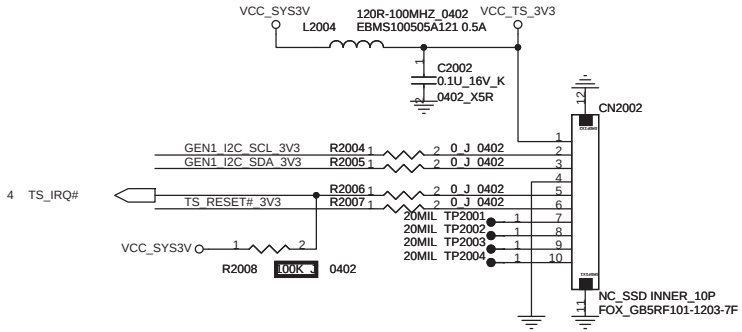

Title	**Touch Pad**	
Size A3	Document Number	Rev DVT
Date: Friday, February 11, 2011	Sheet 20 of 34	

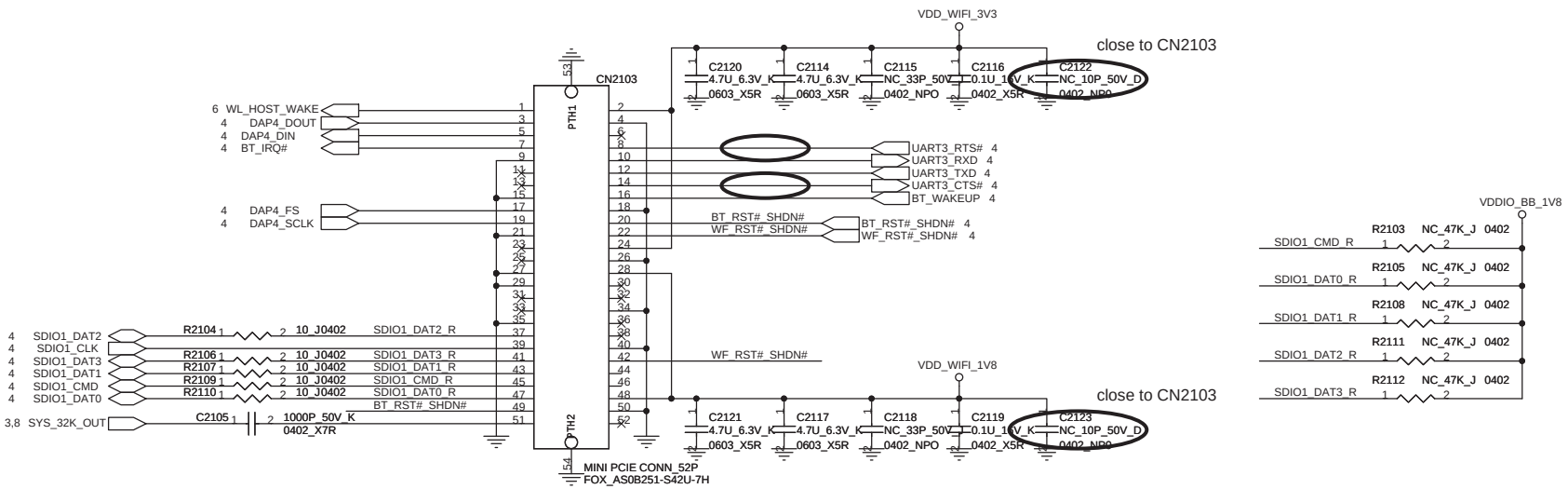

Title	**WLAN+BT Module**		
Size A3	Document Number		Rev DVT
Date: Friday, February 11, 2011		Sheet 21 of 34	

move LDO and some parts to module side.

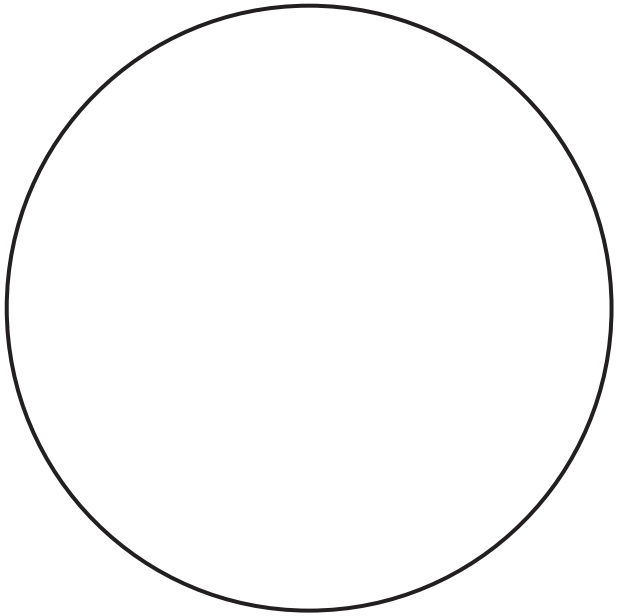

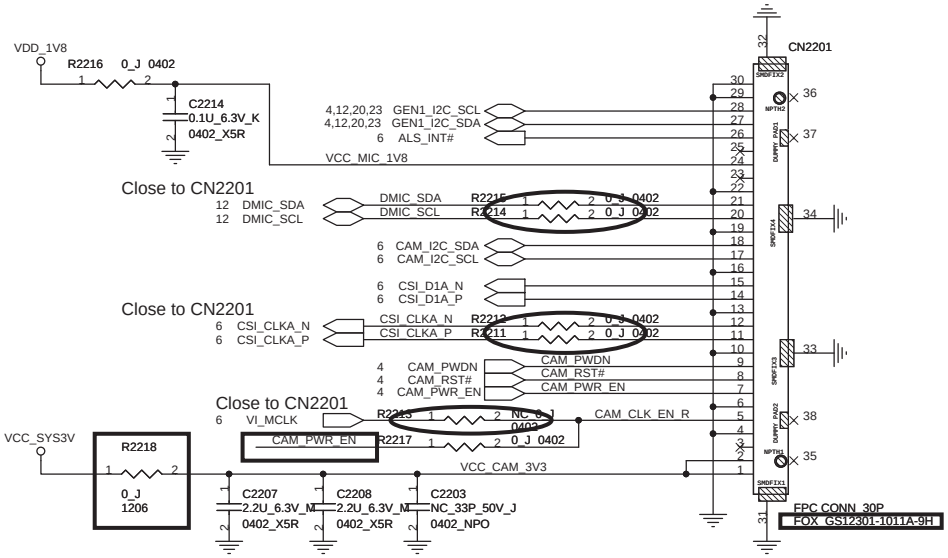

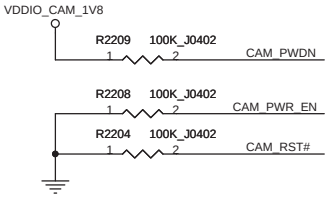

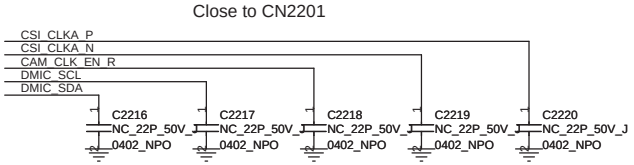

Title	**Camera Module Connector**	
Size A3	Document Number	Rev DVT
Date: Friday, February 11, 2011	Sheet 22 of 34	

Thermal Sensor

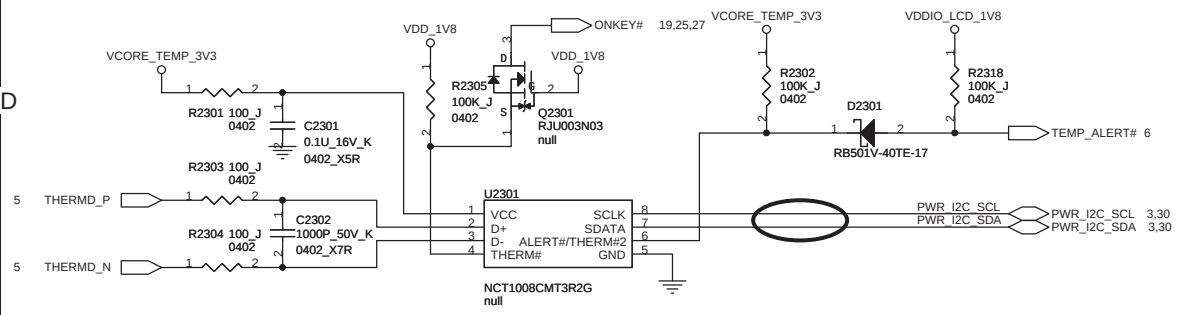

Accelerometer

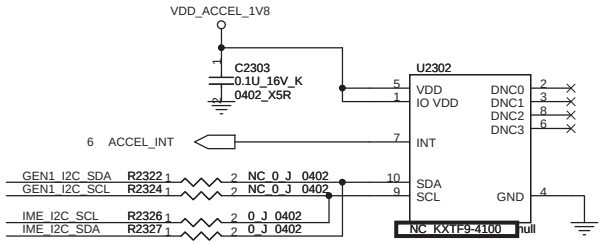

Compass

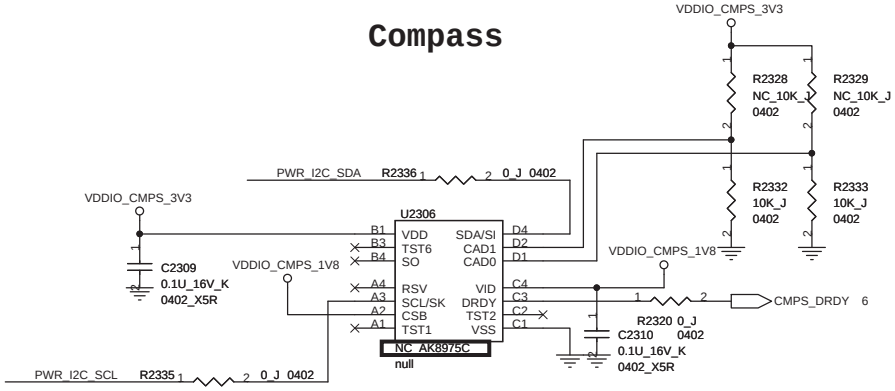

Gyroscope

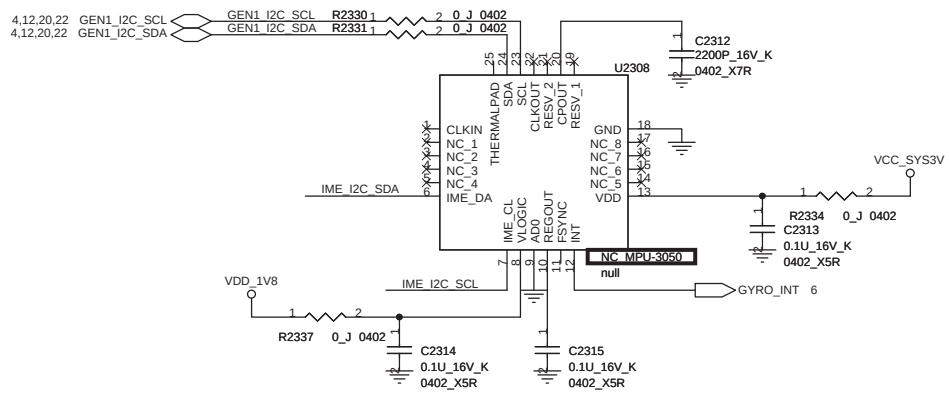

Thermal Switch

Set 75 degC on CPU side.

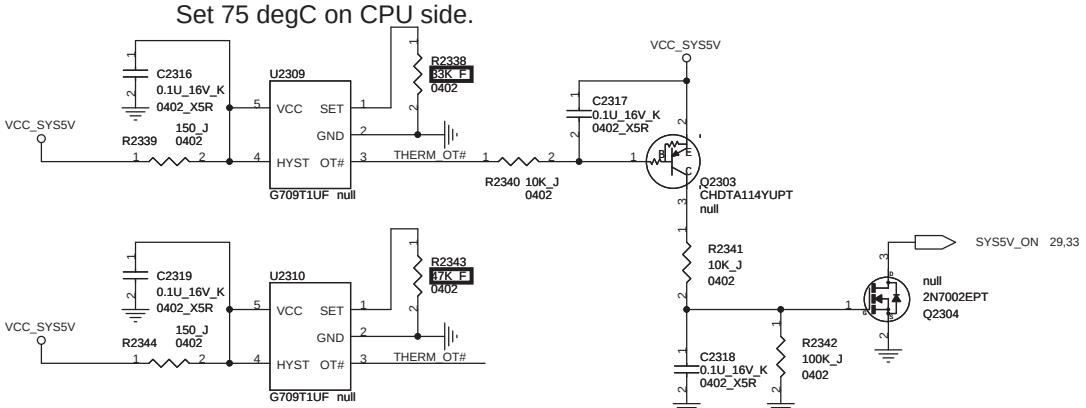

Set 57 degC on PCB edge.

Hall Sensor

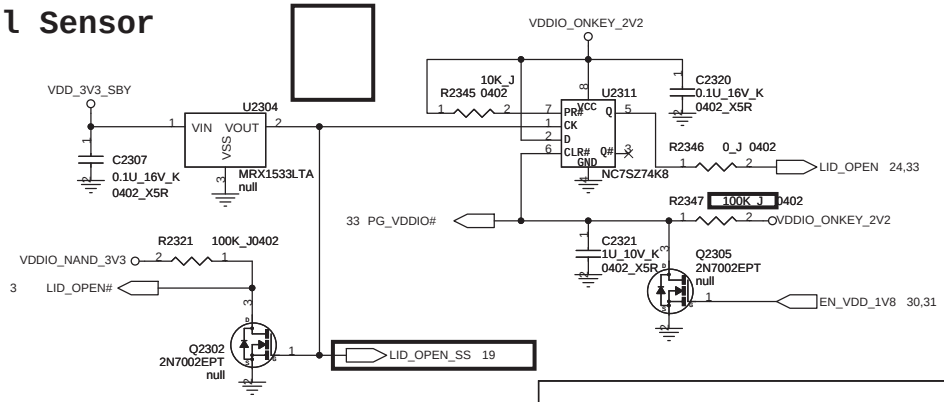

Title	Sensors
Size A3	Document Number
Rev DVT	
Date: Friday, February 11, 2011	Sheet 23 of 34

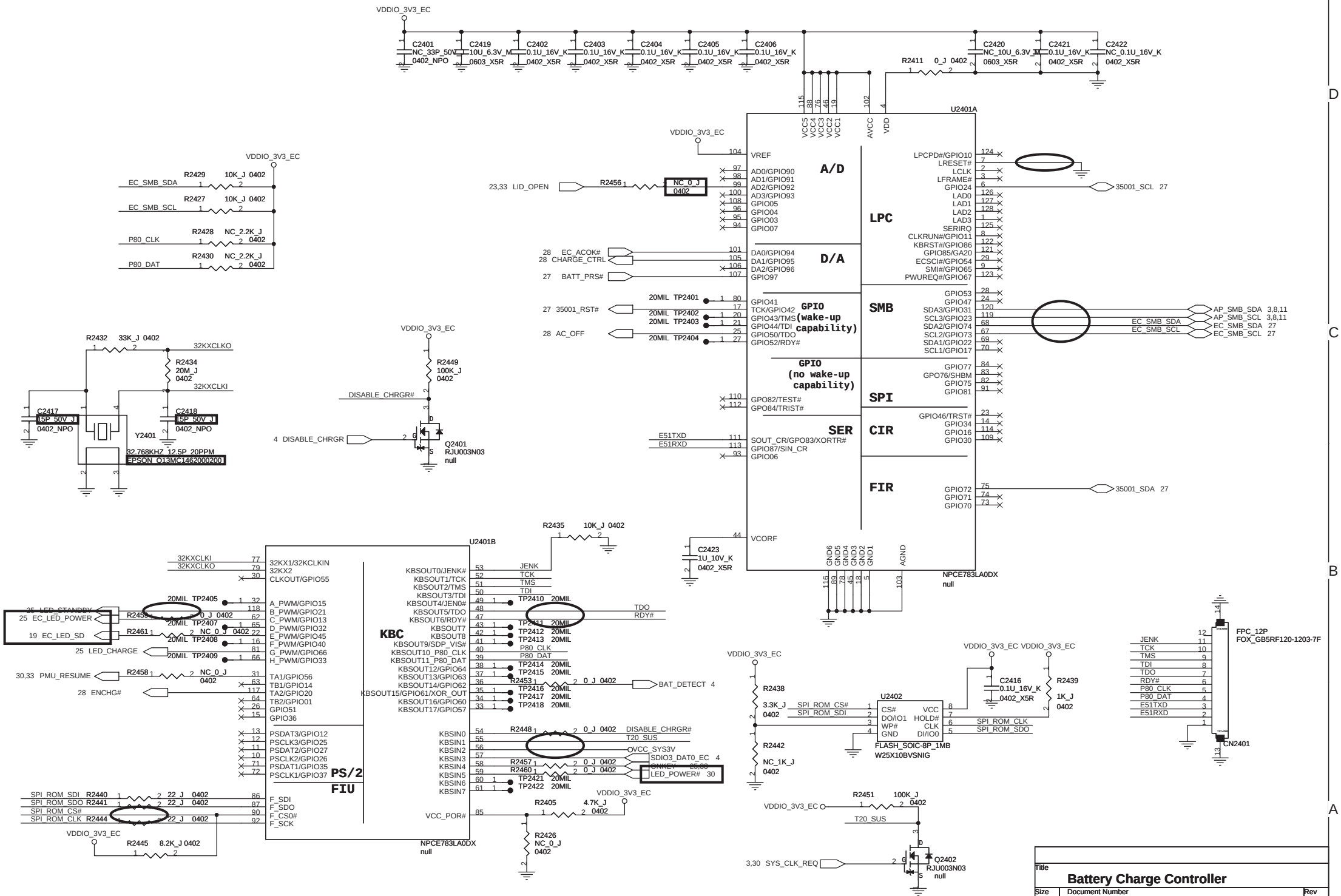

Title
Battery Charge Controller

Size	Document Number	Rev
A3		DVT

Date: Friday, February 11, 2011 Sheet 24 of 34

Reset Button

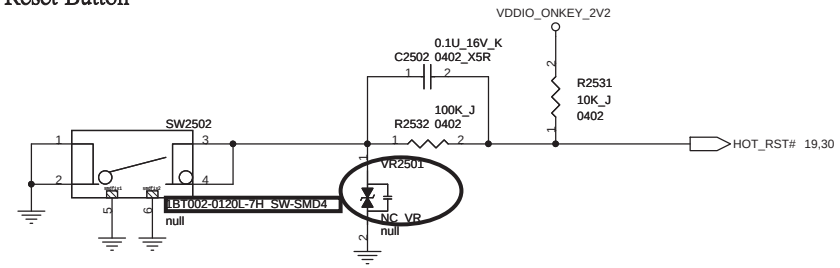

Keyboard Connector

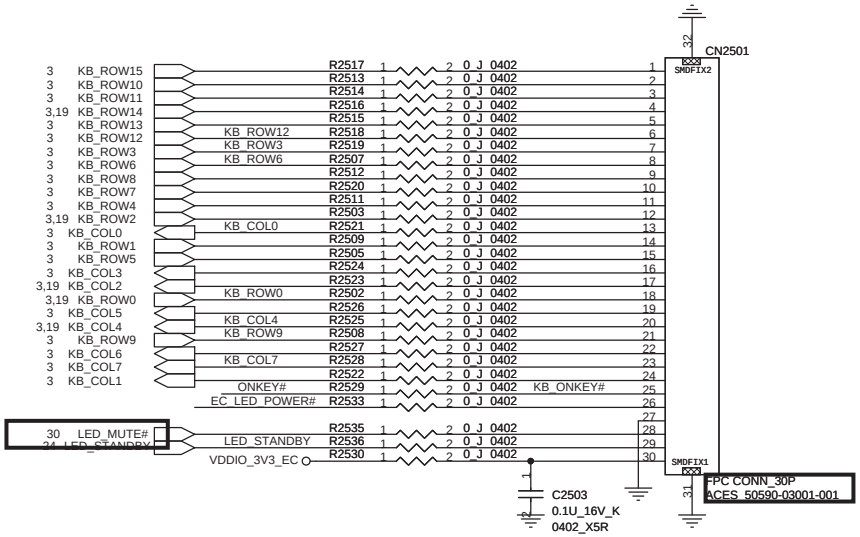

Power Button

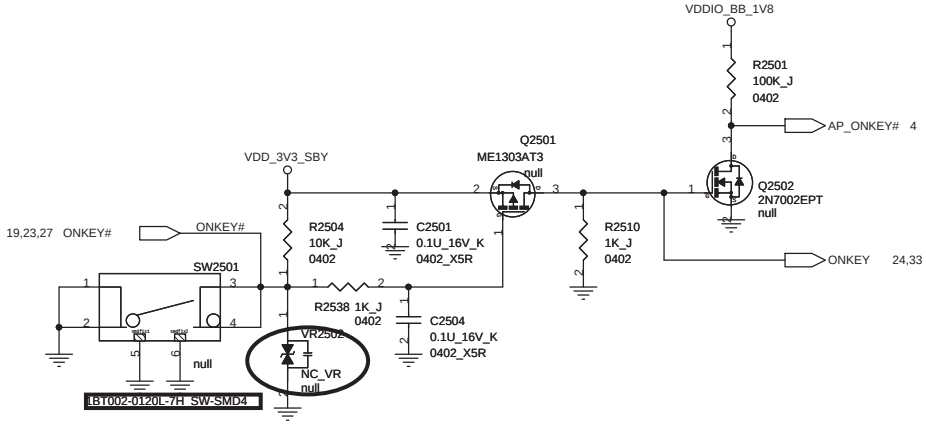

Close to CN2501

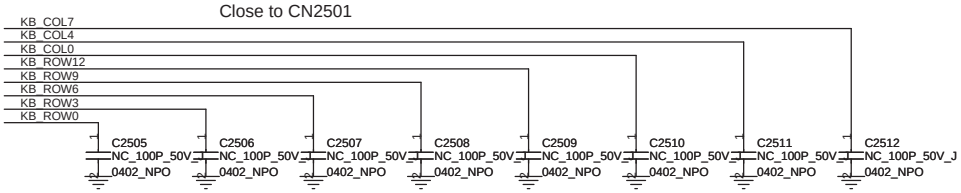

LED DB Connector

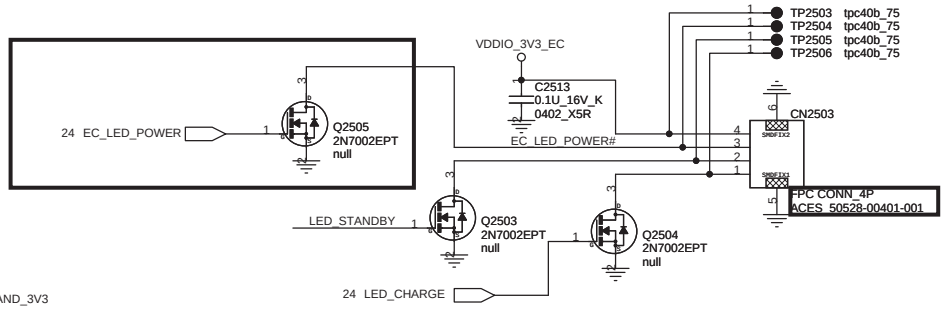

Develop Mode

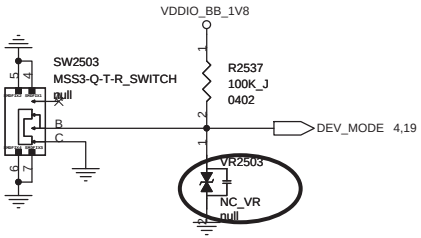

Manufacture Mode

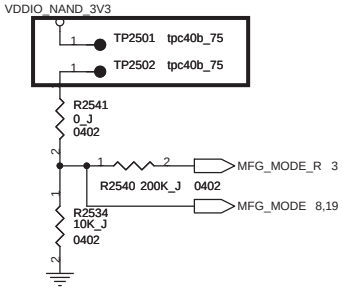

G Recovery SW

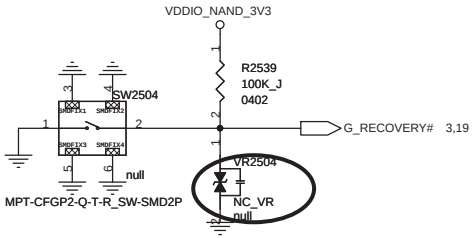

Title	**Keyboard and Switches**	
Size A3	Document Number	Rev DVT
Date: Friday, February 11, 2011	Sheet 25 of 34	

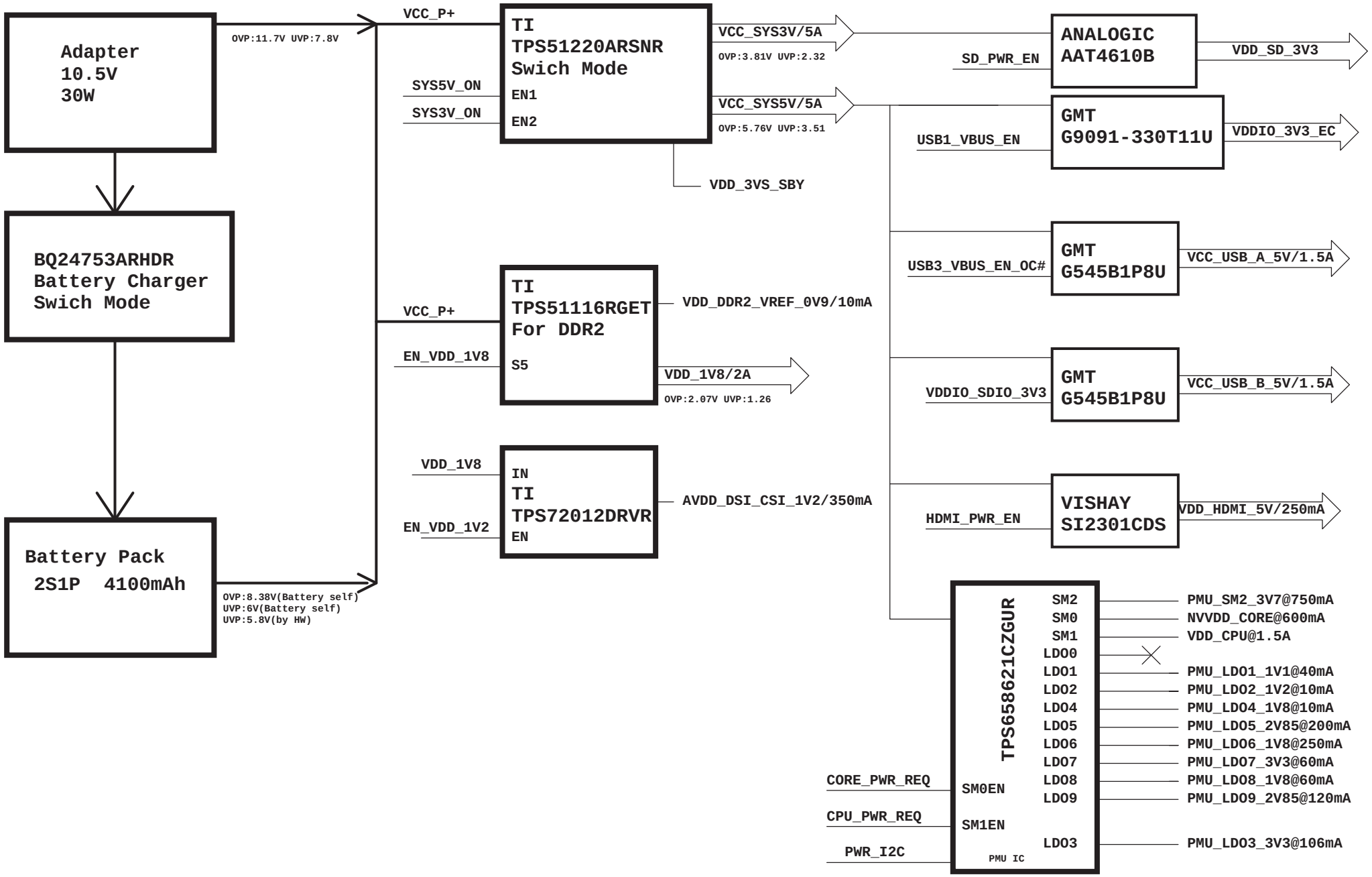

Title	Power Block Diagram	
Size A3	Document Number	Rev DVT
Date: Friday, February 11, 2011	Sheet 26 of 34	

DC IN CONN.

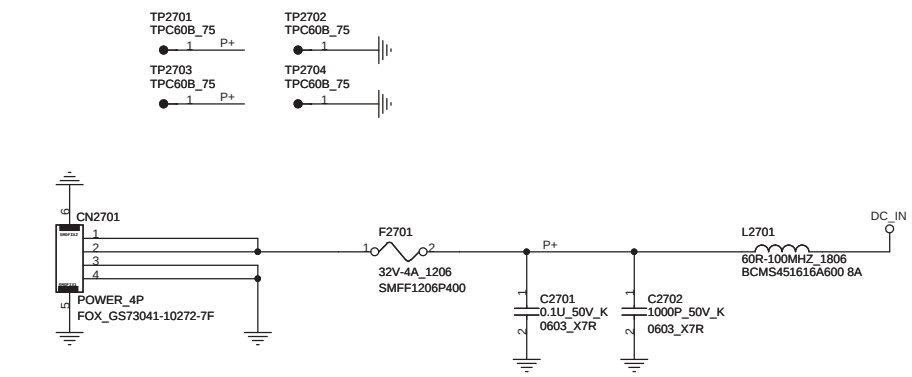

Power Test Point

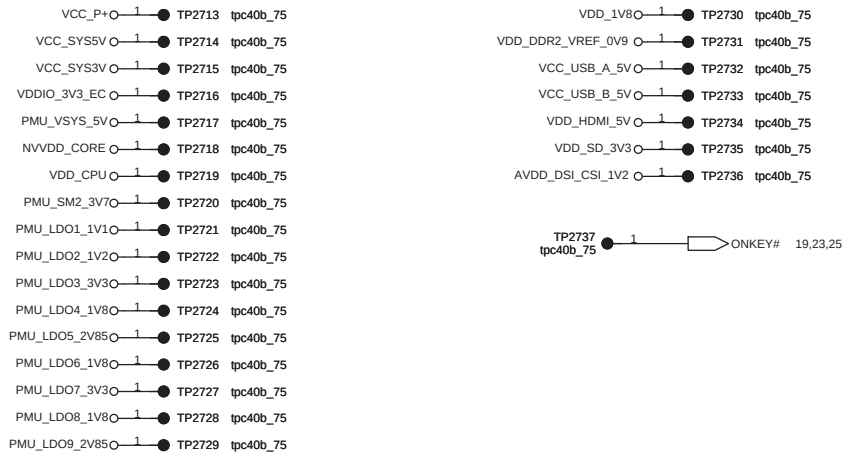

Battery CONN.

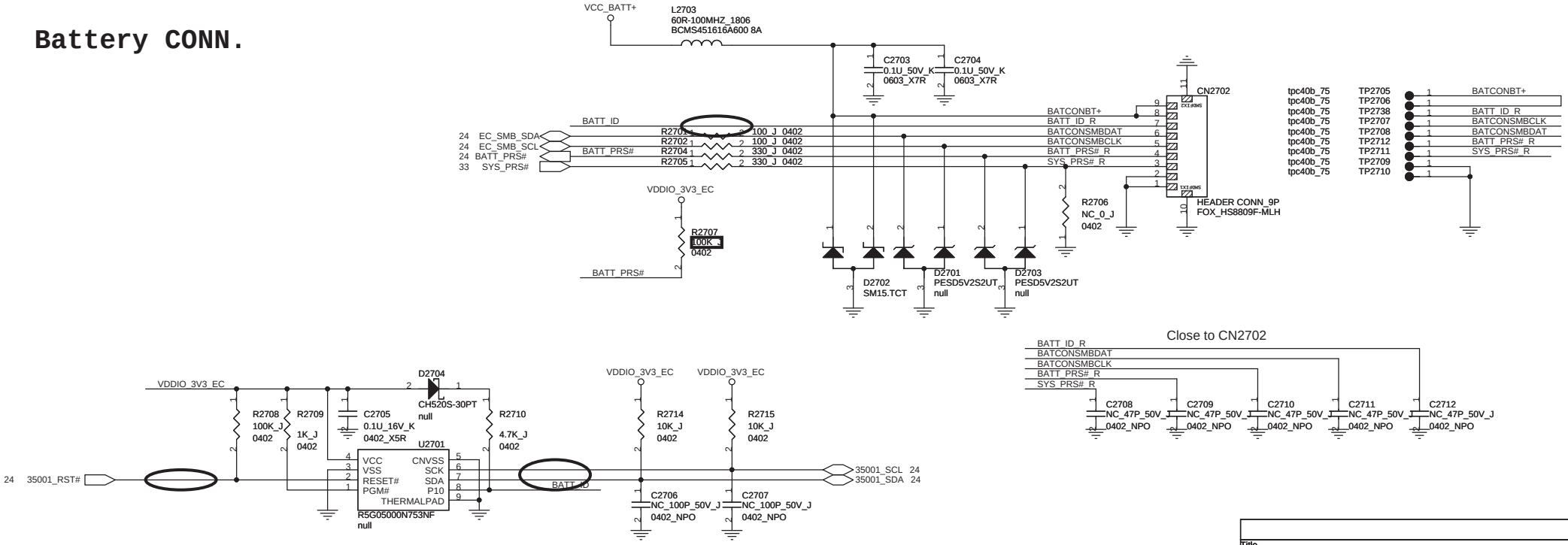

Title	DCIN & Battery Connector
Size A3	Document Number
Rev DVT	
Date: Friday, February 11, 2011	Sheet 27 of 34

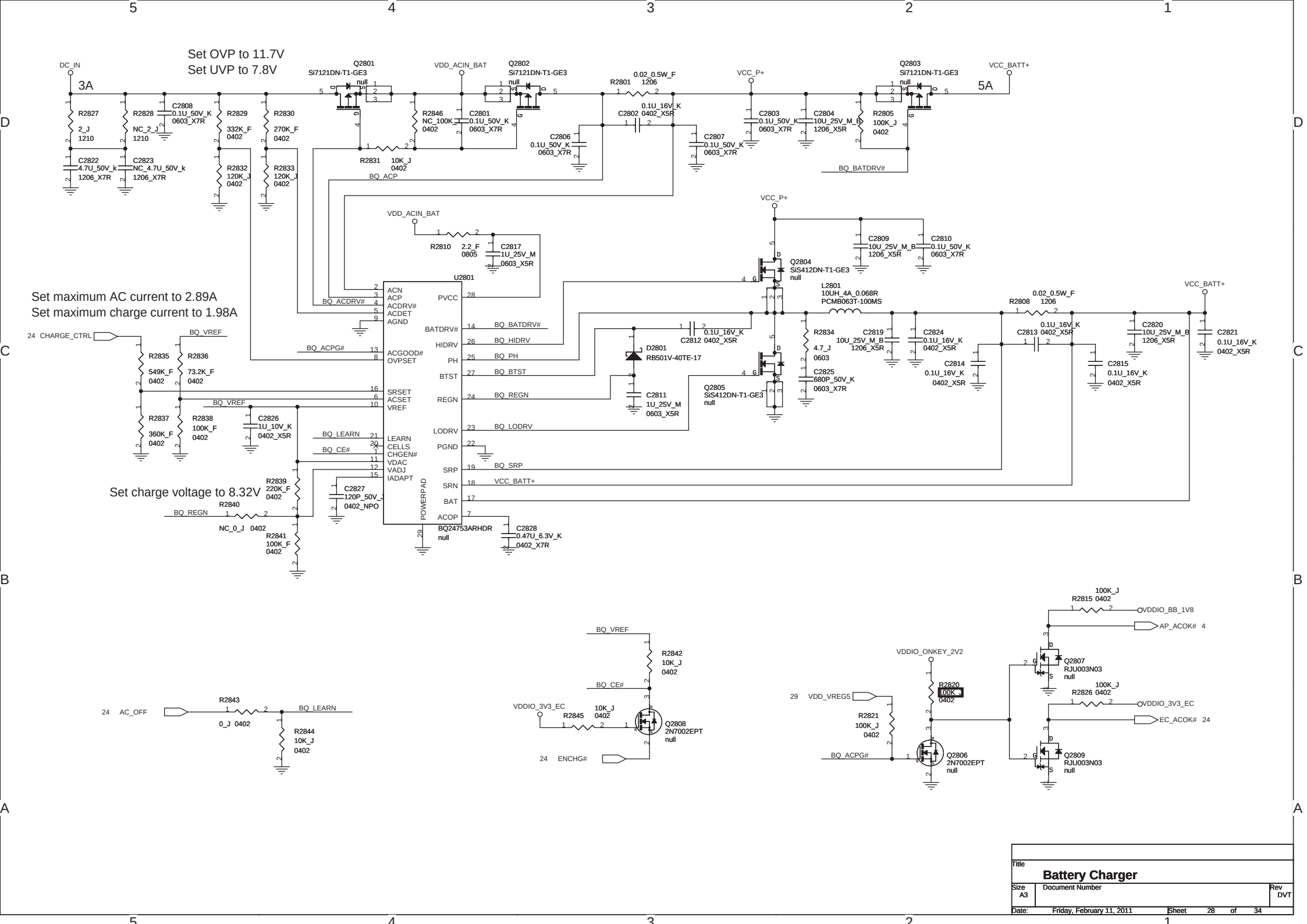

Title	**Battery Charger**
Size A3	Document Number
Rev DVT	
Date: Friday, February 11, 2011	Sheet 28 of 34

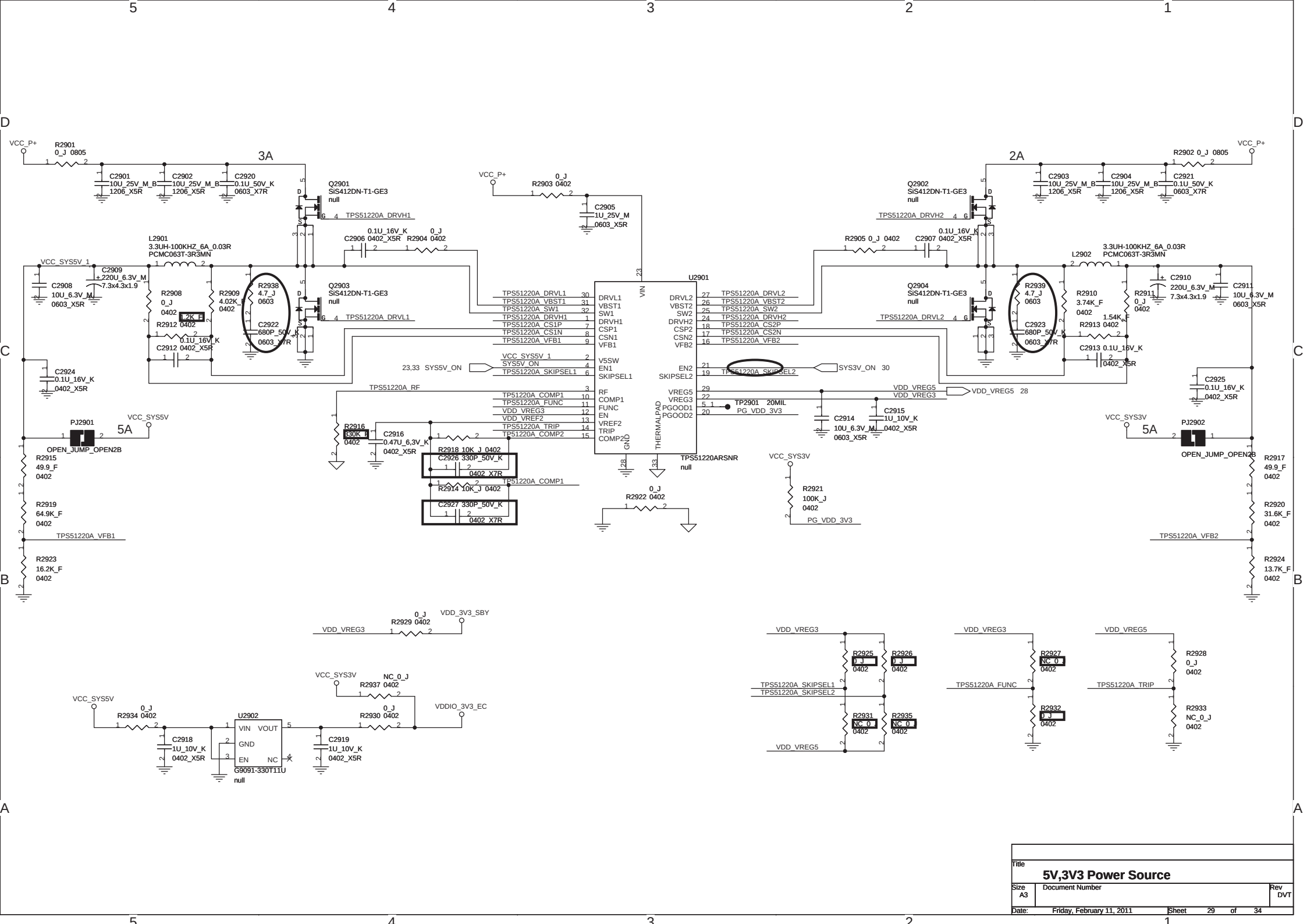

Title	**5V,3V3 Power Source**
Size A3	Document Number
Rev DVT	
Date: Friday, February 11, 2011	Sheet 29 of 34

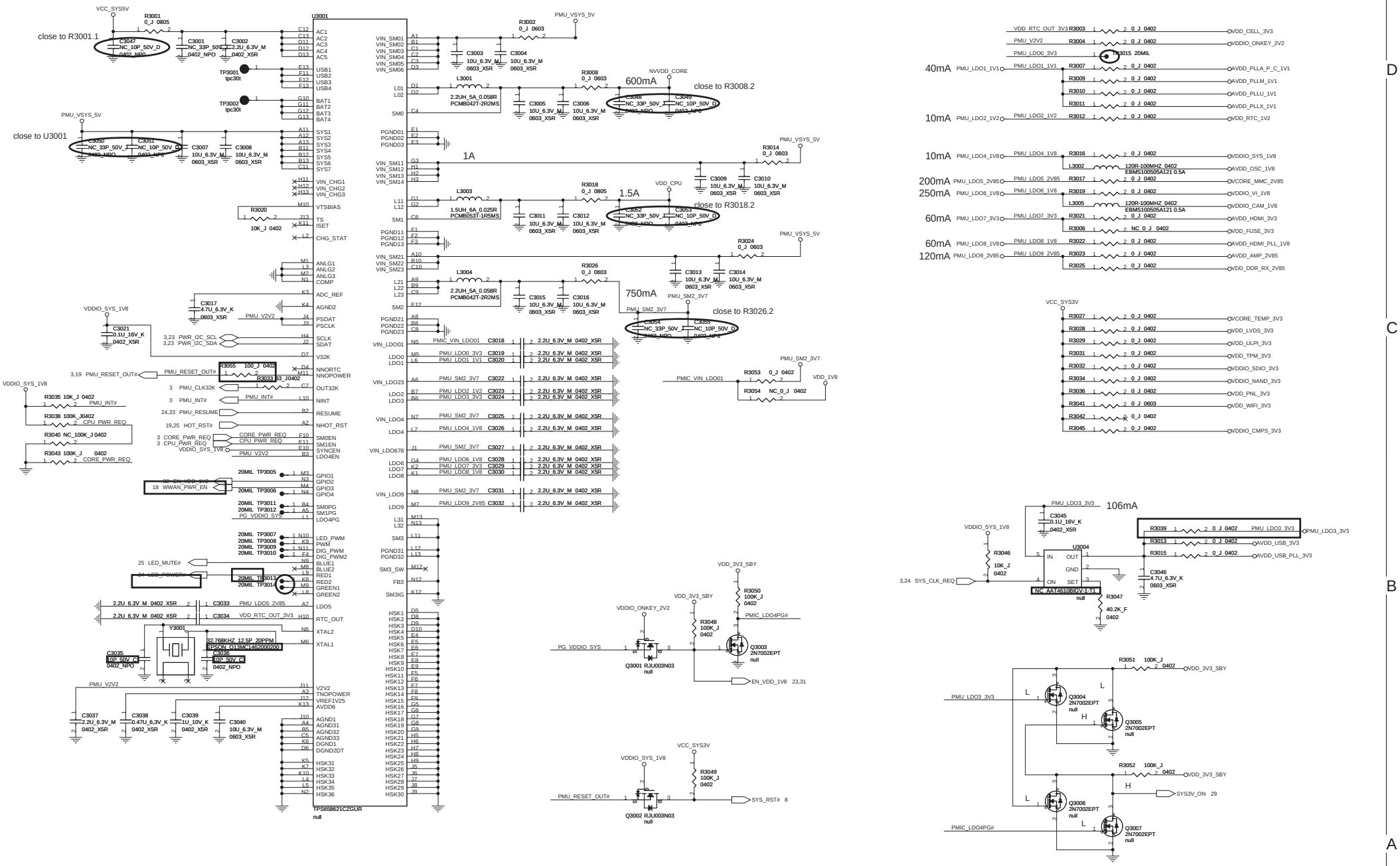

Title: PMIC for CPU

Size: A2 | Document Number | Rev: DVT

Date: Friday, February 11, 2011 | Sheet 30 of 34

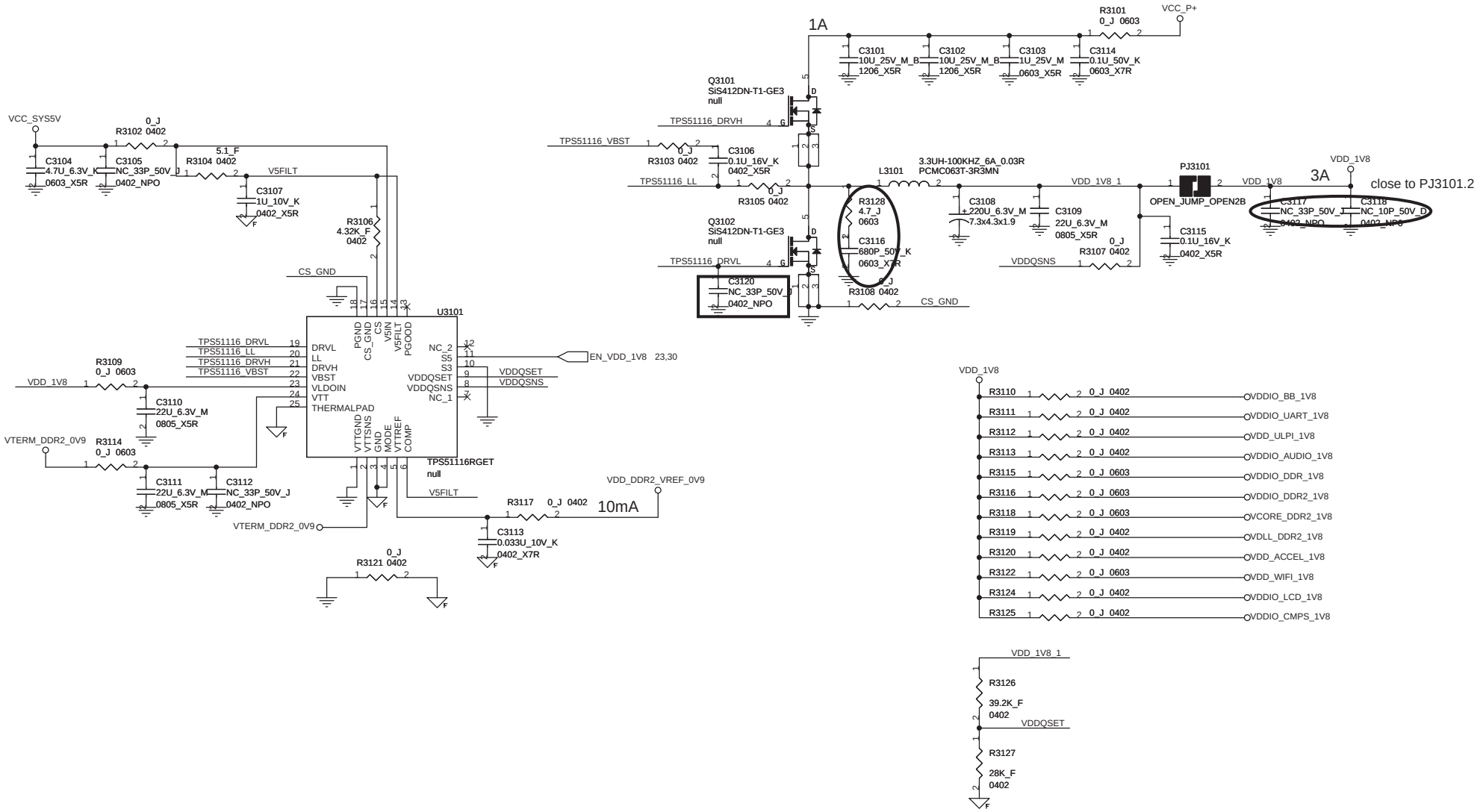

Title
1.8V Power Source

Size	Document Number	Rev
A3		DVT

Date: Friday, February 11, 2011 Sheet 31 of 34

A USB Conn. Power Switch

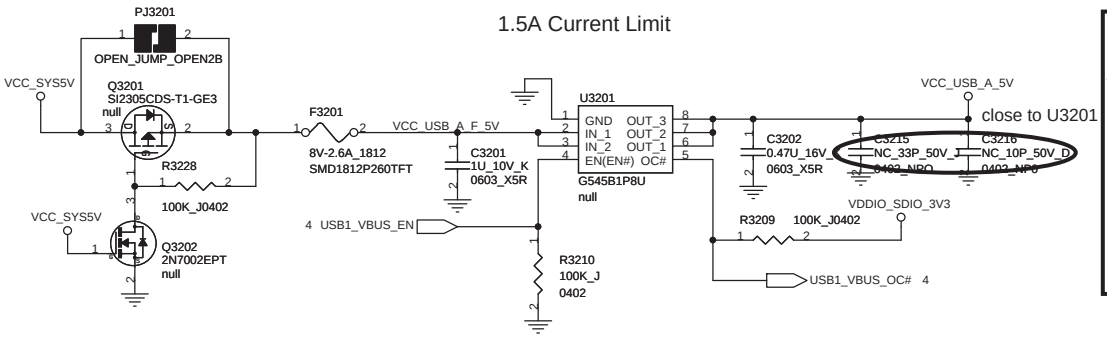

HDMI Port Power Switch

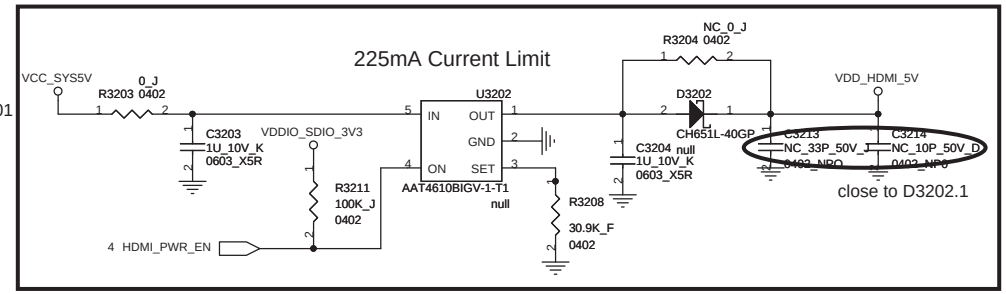

B USB Conn. Power Switch

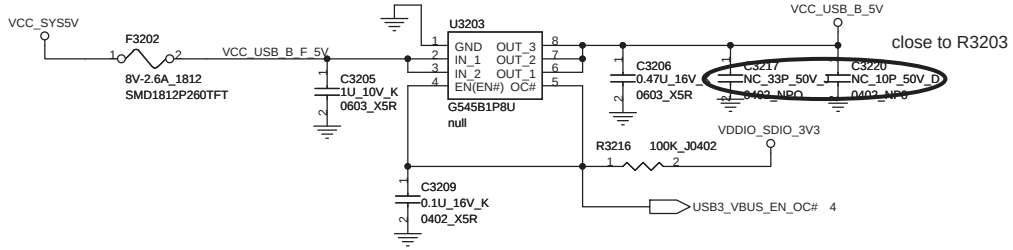

SD Card Power Switch

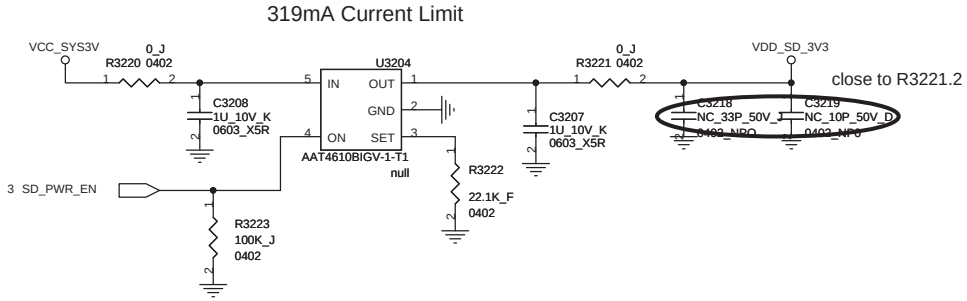

1.2V For MIPI

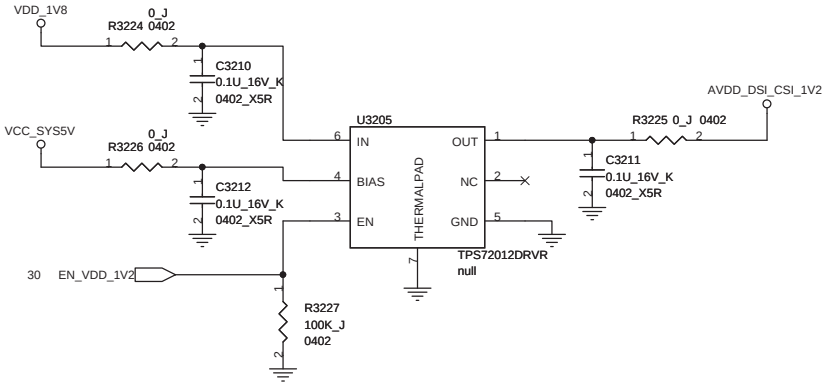

RTC CELL

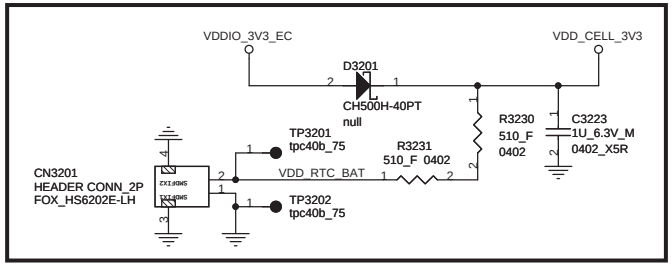

RTC connector has to check it with ME.

Title	**Power Switch**	
Size A3	Document Number	Rev DVT
Date: Friday, February 11, 2011	Sheet 32 of 34	

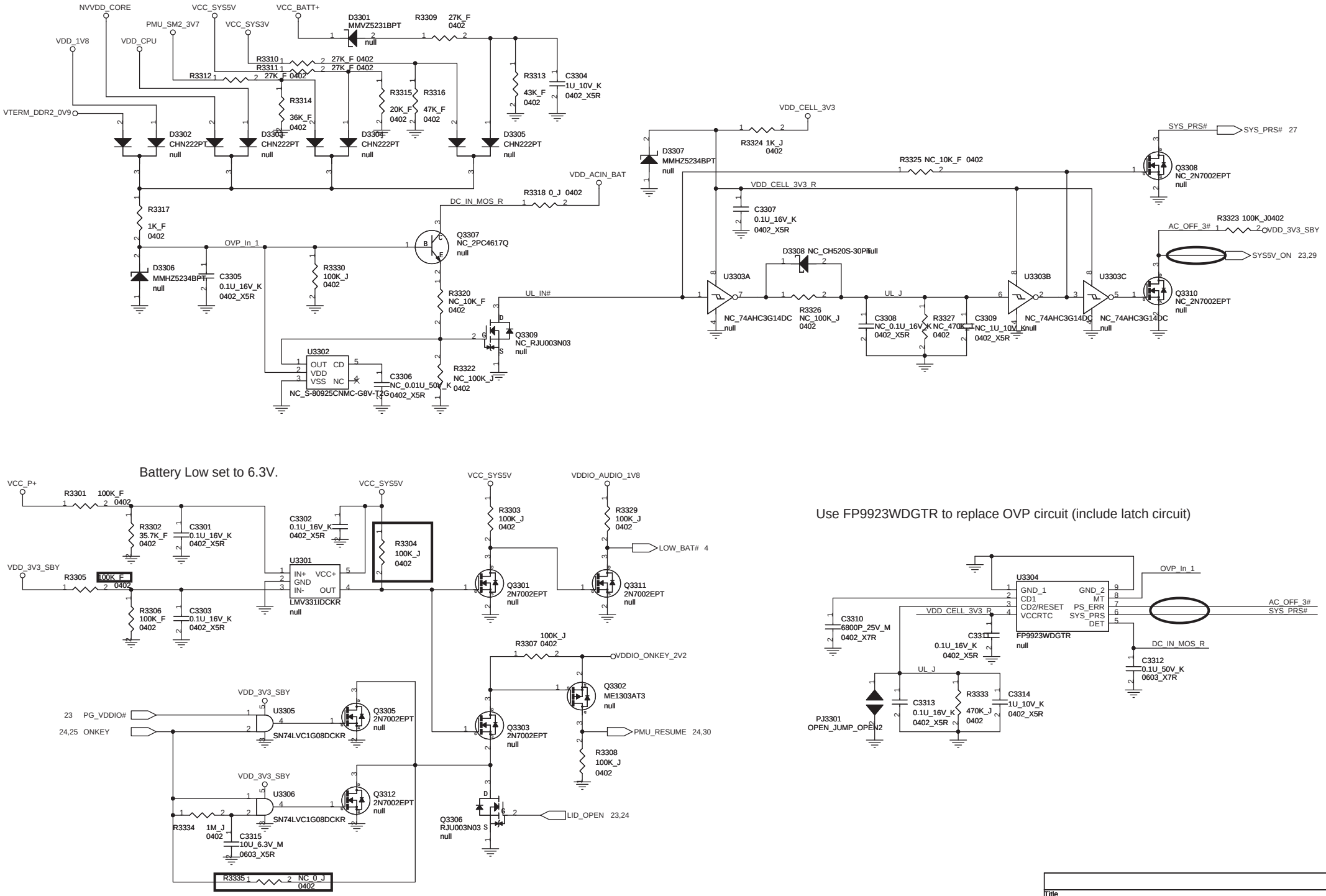

Title	**Low Battery Detector and System OVP**
Size A3	Document Number
Rev DVT	
Date: Friday, February 11, 2011	Sheet 33 of 34

2010/12/20

Page 08: Connect the VSB pin of U802 to Standby 3.3V (VDD_3V3_SBY) instead of VDD_TPM_3V3.
Page 16: Connect pin12 of WM9001(U1602, U1603) to AVDD_AMP_2V85.
Page 23: Remove R2316.
Add a net 'LID_OPEN_SS' from debug connector.
Cahnge R2347 from 10K to 100K.
Page 26: Modify the power block diagram.
Page 32: Modify HDMI power circuit.
Page 33: Add 100K resistor between pin4 and pin5 of U3301.

2010/12/23

Page 16: Combine two speaker connectors to one 4pin connector.
Page 24, 25, 30: change Power_LED controlled path. PMIC >EC >LED.
Page 30: Change PMIC from TPS658621A to TPS658621CZGUR.
Page 32: Exchange pin1 and pin2 of CN3201. (more popular)
Page 08, 24, 30: Becasue current 32.768K X'tal will be EOL.
EPSON hopes we use Q13MC1462000200 to replace it.

2011/1/3

Page 01: Change the size of screw hole.
Page 08: Move TPM circuit to TPM DB.
Page 13: Fix left channel of headphone no audio output.
Page 14: Fix external microphone no function.
Page 17: Change USB connector to FOX_UB1112C-RA605-7H.
Page 20: Change touch pad connector to ACES_50542-00601-001.
Page 25: Add a MOS to reverse control signal of POWER LED.
Change keyboard connector to ACES_50590-03001-001.
Change LED DB connector to ACES_50528-00401-001.
Page 32: Change RTC connector to holder type.
Add two test pad for RTC current measurement.

2011/1/7

Page 03: Change SW301 to NC.
Change SW302 to NC, and set the booting device in SPI-ROM.
Page 23: Change U2302, U2306, and U2308 to NC.
Page 25: Remove SW2505, use two test points to replace it.
Change SW2501, SW2502 to NC.
Page 32: Change RTC to rechargeable type.

2011/1/14

Page 01: Change the size of screw hole (H15).
Page 04,19,30: Modify SD LED circuit. Remove PMIC control SD LED.
Page 11: Modify RC value on LCD power rails.
Add fuse on LCD power rails.
Change CN1101 to GS12301-1011A-9H.
Page 15: Change HDMI con. from QJ1119L-NV25-7H to QJ11ADL-NSSF-7H.
Page 20: Add fuse on touch pad power rail.
Page 22: Modify camera circuit, move some parts to module side.
Page 24,30: Fine tune the capacitors for 32K crystal.

Page 29: Set TPS51220A to current mode, and fine tune some resistors.
Page 33: Battery UVP set to 5.9V.

2010/01/18

Page 27: Add test points for power rails testing.

2010/01/24

Page 23: Change the HW thermal switch setting, CPU: 75 degree C, Environment: 57 degree C.
Page 31: Reserve a cap on "TPS51116_DRVL" to fine tune deadtime.
Page 19: Reserve VR to GND on each SD pin except GND pin for ESD.
Page 25: Reserve VR to GND on each switch for ESD issue.
Page 12: Reserve RC on DAP_MCLK1 & DAP1_SCLK for EMI.
Page 13: Change 100pf*2 to 470pf*2 on C1301&C1302 for Audio EMI.
Page 14: Change 220pf*2 to 470pf*2 on C1404&C1405 for Audio EMI.
Page 29: Mount R2938(4.7ohm), C2922(680pf) on VCC_SYS5V for EMI.
Mount R2939(4.7ohm), C2923(680pf) on VCC_SYS3V for EMI.
Page 04: Change below RC values to improve RF sensitivity.
DAP_MCLK1; R424 -> 100ohm, C421 -> 12pF.
DAP1_SCLK; R421 -> 68ohm, C422 -> 12pF.
SDIO1_CLK; R426 -> 68ohm, C424 -> 12pF.
DAP_MCLK2; add a Cap -> 12pF.
Page 20: Change R2008 to 100K. for less power consumption.
Page 27: Change R2707 to 100K. for less power consumption.
Page 28: Change R2820 to 100K. for less power consumption.
Page 03: Fine tune the capacitors for 12M crystal.
Page 33: Battery UVP set to 6.3V, same as EVT.

2010/01/25

Page 08: Change TPM connector to ACES_50542-01001-001.

2010/01/26

Page 30: Add an series 100ohm resistor on the pin M11 of U3001.
Page 03: Mount SW301 for nVIDIA force recovery mode.
Page 25: Mount SW2501 for power button and SW2502 for reset button.
Page 32: Modify HDMI power circuit. back to EVT circuit.
Page 22: Connects pin1 of R2217 to "CAM_PWR_EN" signal.
Page 04,19,24: Add EC_LED_SD control signel from EC, and refer to SDIO3_DAT0.

2010/01/27

Page 11: Change Q1104 to FDN340P.
Page 19: Change R1929 to 100K and Q1901 to 2N7002ESPT.
Page 20: Reserve CN2003 in top-side for test.
Page 24: Change EC_LED_SD signal to E_PWM (pin22)
All page: remove some non-used 0ohm resistors, and direct connection.

2010/01/28

Page 04,20: Reserved for SPI Touch pad.

2010/02/09

Page 04,14: Reserved Tegra N25 pin for EXT_MIC_DET# signal use.
Page 18: Add bus switch IC in WWAN USB interface.

Title: **Change Notice**		
Size: A3	Document Number	Rev: DVT
Date: Friday, February 11, 2011	Sheet 34 of 34	