THIS DRAWING AND SPECIFICATIONS, HEREIN, ARE THE PROPERTY OF INVENTEC CORPORATION AND SHALL NOT BE REPODUCED, COPIED, OR USED IN WHOLE OR IN PART AS THE BASIS FOR THE MANUFACTURE OR SALE OF ITEMS WITHOUT WRITTEN PERMISSION, INVENTEC CORPORATION 2009 ALL RIGHT RESERVED

HSF Property : HF

KITTY14I

Huron River Platform

MV Build(Only UMA) A02

2011/03/23

KITTY UMA USB2.0 :

D500 : NA
L536 : NA
U9834 : NA
CN505 : 6026B0184301
CN507 : 6026B0184301

L7076 : NA
L7042 : NA } **USB 3.0**
L7077 : 6014A0013901
L7075 : 6014A0013901 } **USB 2.0**
CN7003 : 6012B0381501
CN7004 : 6012B0381501

DATE	CHANGE NO.	REV
2011-03-11	2011-ECO-004350	A

	EE	DATE	POWER	DATE
DRAWER	Chang, Irene	2010-12-01	Hsieh, Alan	2010-12-01
DESIGN	Hu, Hook	2010-12-01		
CHECK	Hu, Hook	2010-12-01		
RESPONSIBLE				

SIZE = 3 VER :
FILE NAME : KITTY-6050A2424501-A01-2010-12-01
P/N 6050A2424501

INVENTEC

TITLE KITTY
Project Name

SIZE	CODE	DOC. NUMBER	REV
A3	CS	1310A24245-0-MTR	A

SHEET 1 OF 51

Index

PAGE
01. PROJECT NAME
02. INDEX
03. Block Diagram
04. POWER Procedure
05. Power On sequence
06. DC & CHARGE Circuit
07. Battery CONN
08. +V3A & +V5A
09. +V1.5 & +V0.75
10. +V1.8S & +VCCSA
11. VCC & VGFX Core IC
12. +VCC_CORE & +VGFX_CORE
13. VTT & +V1.05S
14. +V5S & +V3S & +V1.5S
15. SLG3NB_CLK GEN
16. CPU-1 (CLK, MISC, JTAG)
17. CPU-2 (POWER)
18. CPU-3 (DMI, DP, PEG, FDI)
19. CPU-4 (DDR3)
20. CPU-5 (GRAPHICS POWER)
21. CPU-6 (GND)
22. Thermal HW , Fan
23. DDR3-1
24. DDR3-2

PAGE
25. PCH-1 (HDA, JTAG, SPI, SATA)
26. PCH-2 (PCI-E, SMBUS, CLK)
27. PCH-3 (DMI, FDI, GPIO)
28. PCH-4 (LVDS, DDI)
29. PCH-5 (PCI, USB, NVRAM)
30. PCH-6 (GPIO, VSS_NTFC, RSVD)
31. PCH-7 (POWER)
32. PCH-8 (POWER)
33. PCH-9 (GND)
34. KBC ITE8752
35. Keyboard & TouchPad & LED
36. CRT CONN
37. LCM & eDP CONN
38. HDMI CONN
39. SATA HDD & ODD ; PBN CONN
40. LAN
41. RJ-45
42. Card Reader
43. Audio Codec
44. BLANK
45. USB3.0 IC
46. USB3.0 CONN
47. SCREW& EMI
48. WLAN & BlueTooth
49. WWAN & SIM
50. USB & HP JACK & MIC JACK (DB)
51. Power & Pick button BOARD(DB)

Inventec Confidential

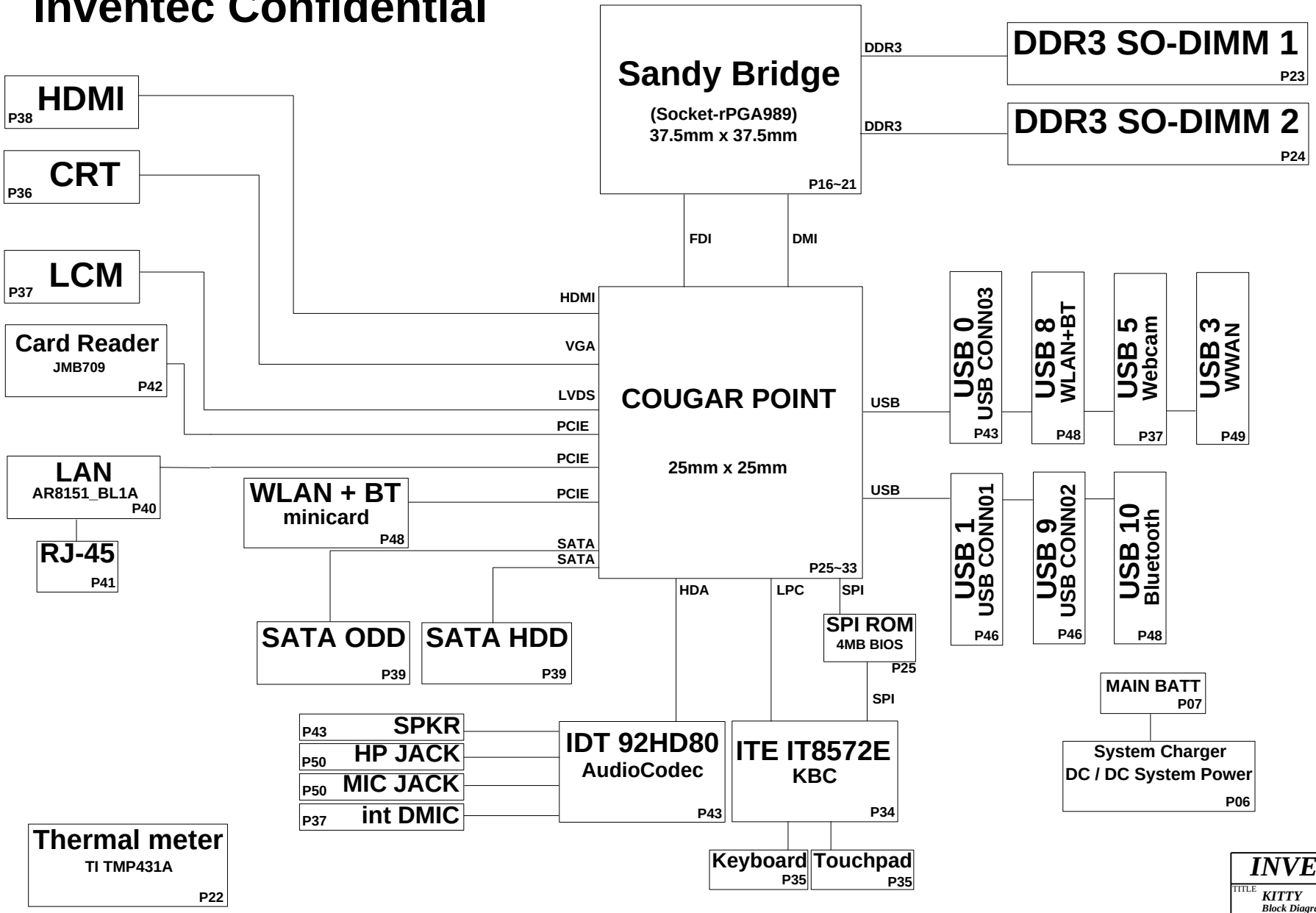

CHANGE by	Chang, Irene	22-Mar-2011	

INVENTEC

TITLE: KITTY
Block Diagram

SIZE	CODE	DOC. NUMBER	REV
A3	CS	1310A24245-0-MTR	A

SHEET 3 OF 51

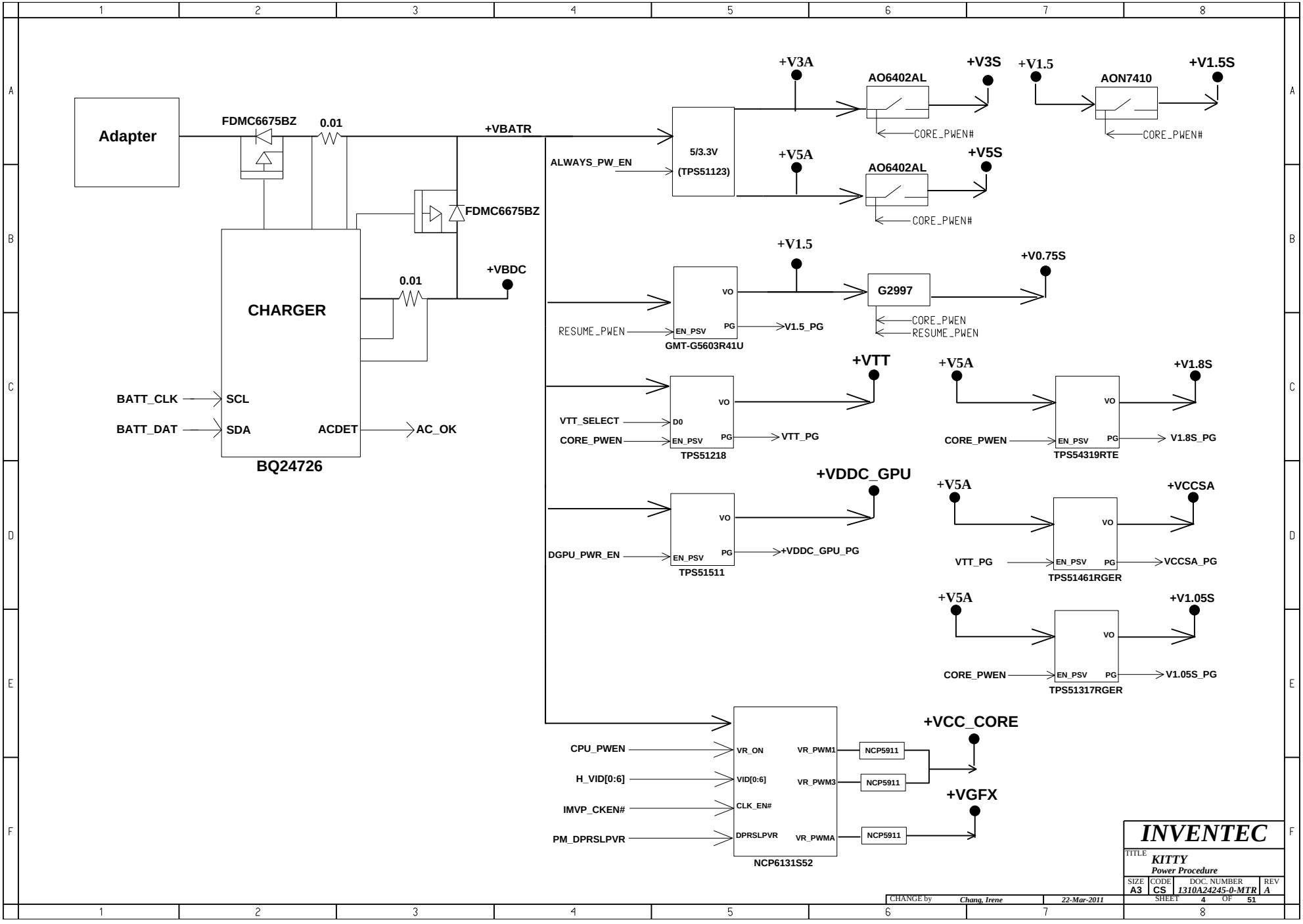
Adapter
FDMC6675BZ
0.01
+VBATR
FDMC6675BZ
0.01
+VBDC
CHARGER
BATT_CLK
SCL
BATT_DAT
SDA
ACDET
AC_OK
BQ24726
ALWAYS_PW_EN
5/3.3V
(TPS51123)
+V3A
AO6402AL
+V3S
+V1.5
AON7410
+V1.5S
CORE_PWEN#
+V5A
AO6402AL
+V5S
CORE_PWEN#
+V1.5
VO
RESUME_PWEN
EN_PSV
PG
V1.5_PG
GMT-G5603R41U
G2997
+V0.75S
CORE_PWEN
RESUME_PWEN
+VTT
VO
VTT_SELECT
D0
CORE_PWEN
EN_PSV
PG
VTT_PG
TPS51218
+V5A
+V1.8S
VO
CORE_PWEN
EN_PSV
PG
V1.8S_PG
TPS54319RTE
+VDDC_GPU
VO
DGPU_PWR_EN
EN_PSV
PG
+VDDC_GPU_PG
TPS51511
+V5A
+VCCSA
VO
VTT_PG
EN_PSV
PG
VCCSA_PG
TPS51461RGER
+V5A
+V1.05S
VO
CORE_PWEN
EN_PSV
PG
V1.05S_PG
TPS51317RGER
CPU_PWEN
VR_ON
H_VID[0:6]
VID[0:6]
IMVP_CKEN#
CLK_EN#
PM_DPRSLPVR
DPRSLPVR
VR_PWM1
VR_PWM3
VR_PWMA
NCP5911
NCP5911
NCP5911
+VCC_CORE
+VGFX
NCP6131S52
INVENTEC
TITLE
KITTY
Power Procedure
SIZE A3
CODE CS
DOC. NUMBER 1310A24245-0-MTR
REV A
SHEET 4 OF 51
CHANGE by Chang, Irene
22-Mar-2011

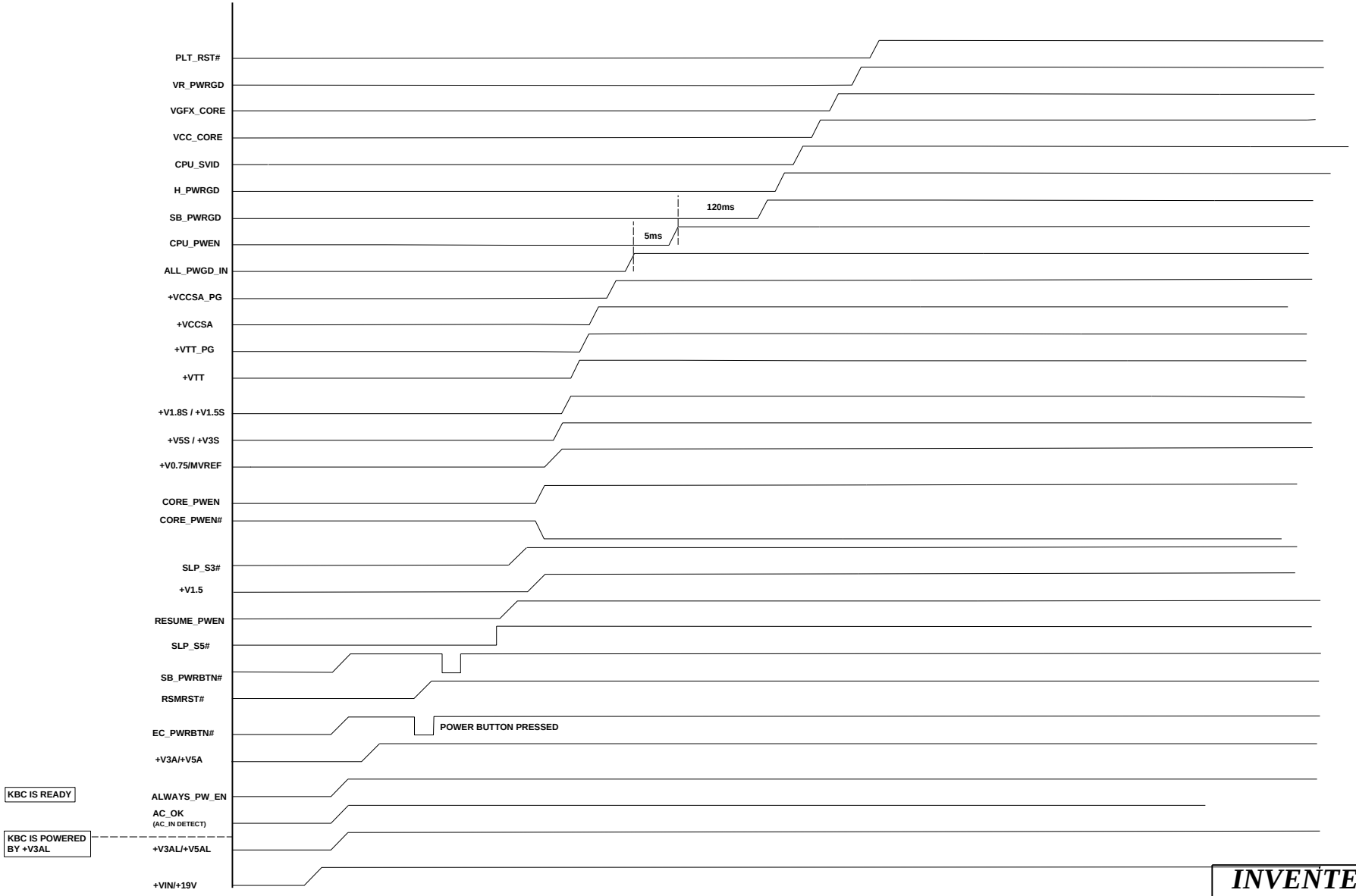

CHANGE by	Chang, Irene	22-Mar-2011	

INVENTEC

TITLE *KITTY*

SIZE	CODE	DOC. NUMBER	REV
A3	CS	1310A24245-0-MTR	A

SHEET 5 OF 51

AC IN

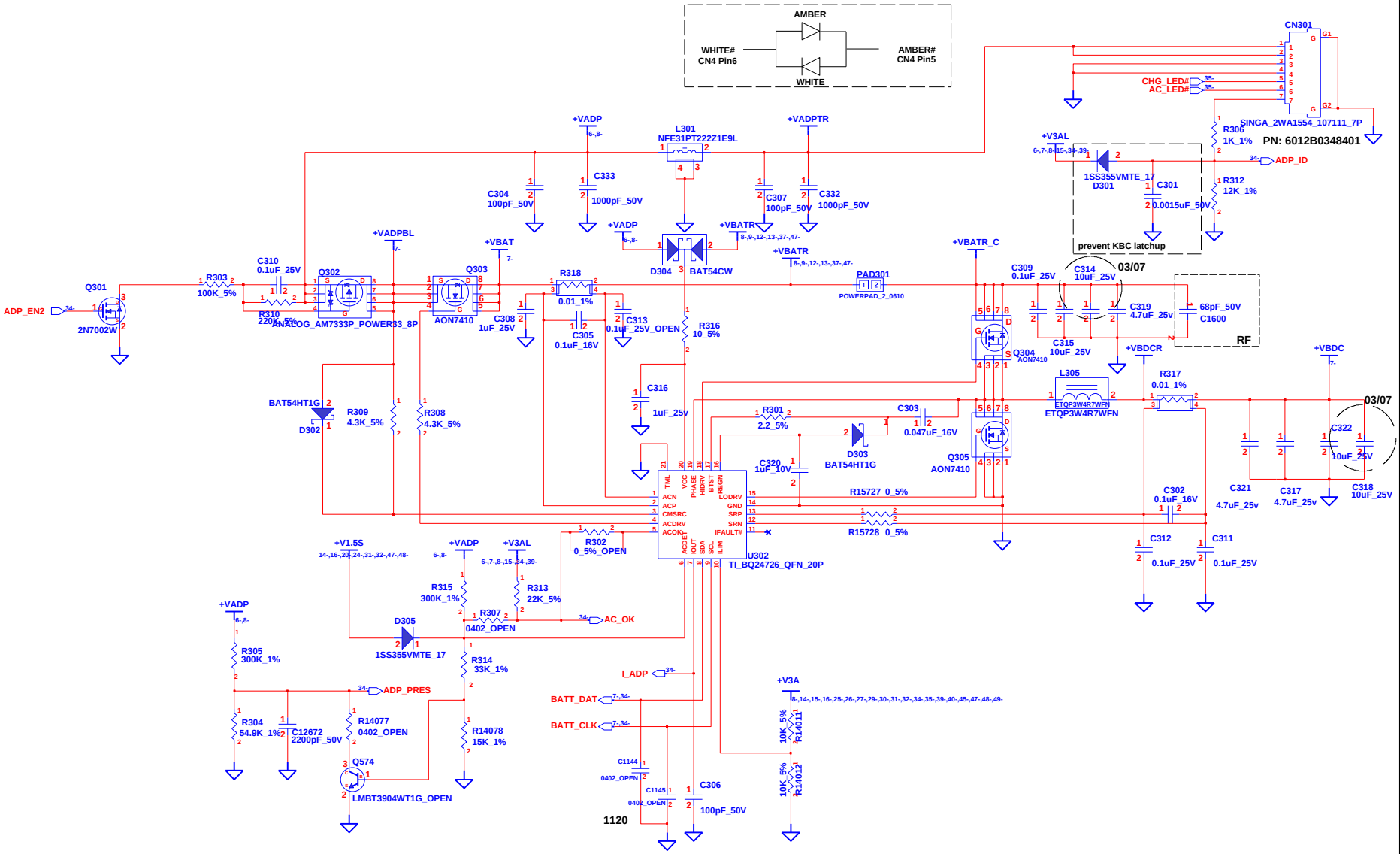

INVENTEC			
TITLE KITTY DC & Battery Charger			
SIZE A3	CODE CS	DOC. NUMBER 1310A24245-0-MTR	REV A
		SHEET 6 OF 51	

CHANGE by	Chang, Irene	22-Mar-2011

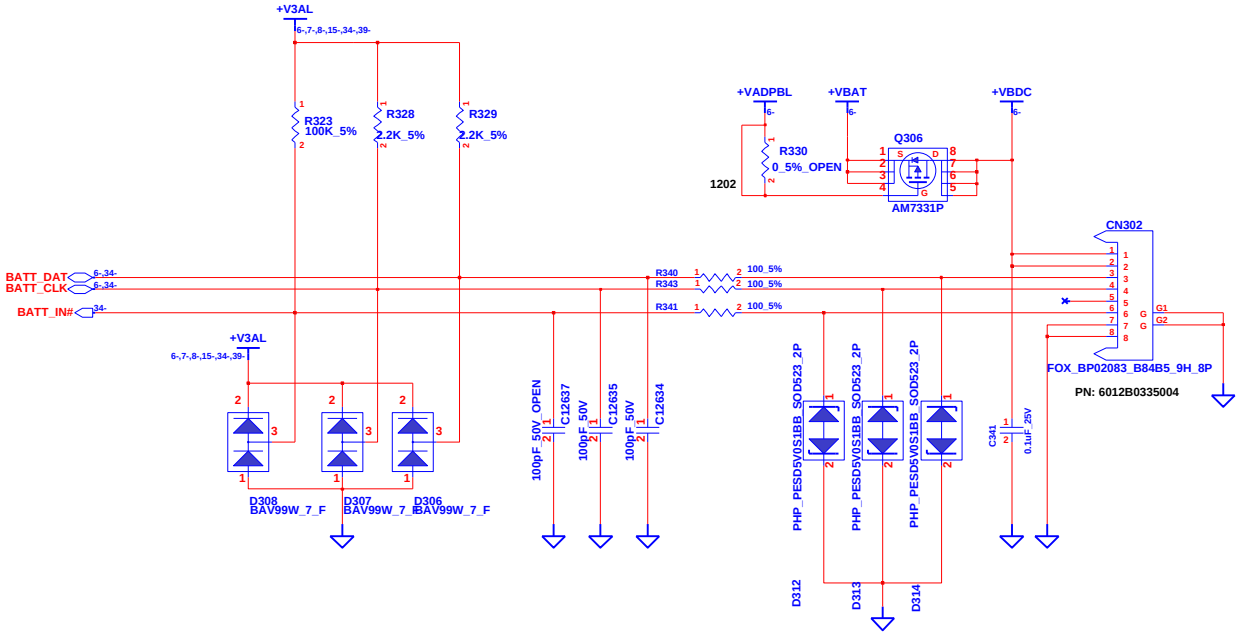

CHANGE by	Chang, Irene	22-Mar-2011	

INVENTEC

TITLE
KITTY
Battery CONN

SIZE	CODE	DOC. NUMBER	REV
A3	CS	1310A24245-0-MTR	A

SHEET 7 OF 51

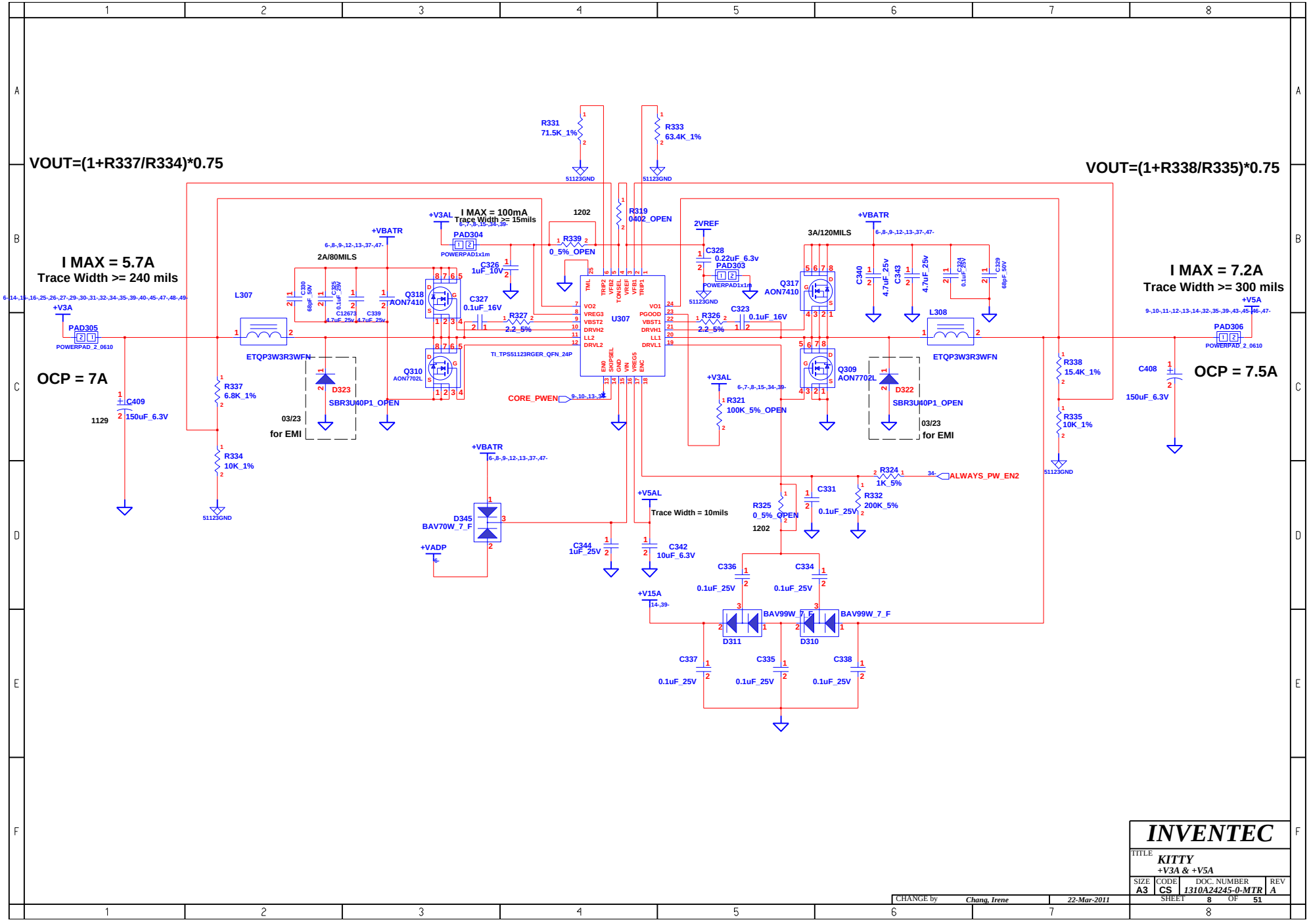

CHANGE by	Chang, Irene	22-Mar-2011	

INVENTEC

TITLE: *KITTY* *+V3A & +V5A*

SIZE	CODE	DOC. NUMBER	REV
A3	CS	1310A24245-0-MTR	A

SHEET 8 OF 51

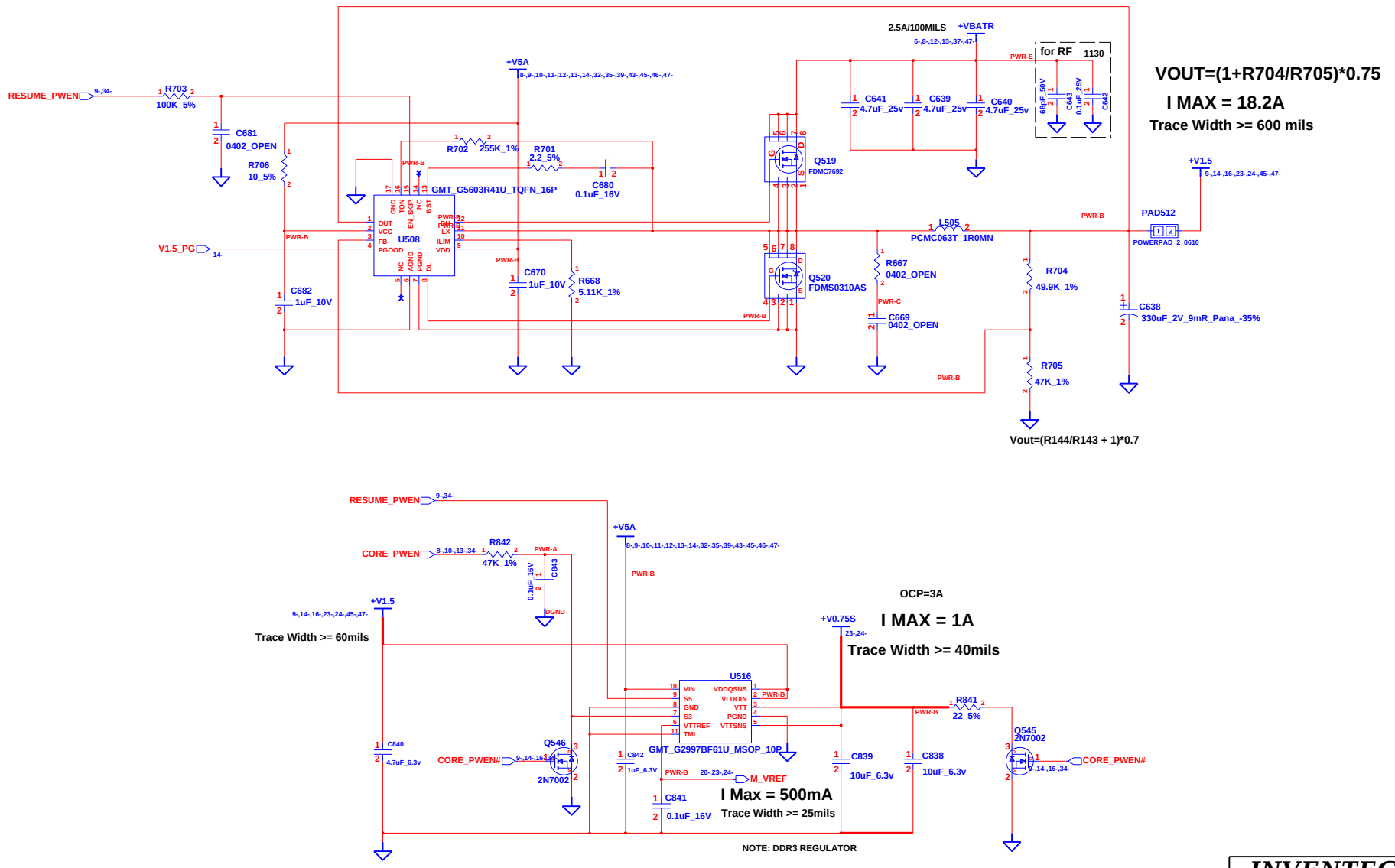

INVENTEC

TITLE KITTY
+V1.5 & +V0.75

SIZE	CODE	DOC. NUMBER	REV
A3	CS	1310A24245-0-MTR	A

SHEET 9 OF 51

CHANGE by Chang, Irene 22-Mar-2011

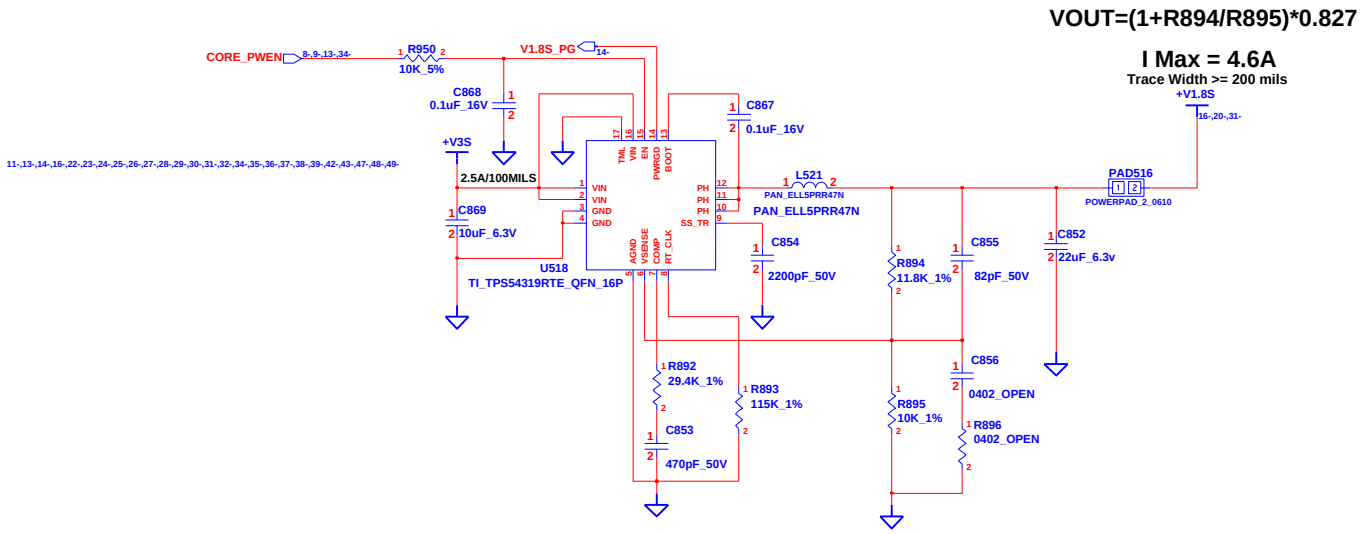

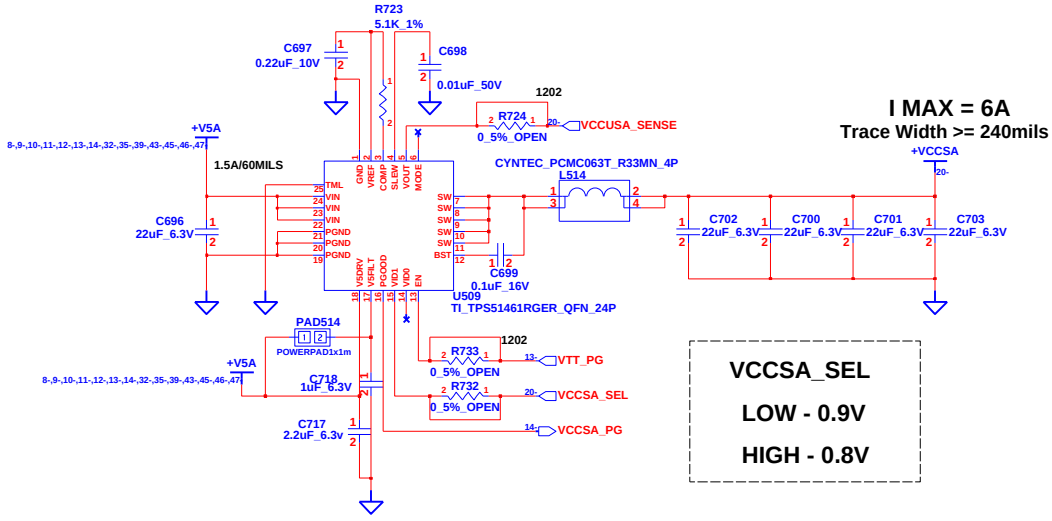

INVENTEC

TITLE: KITTY
+V1.8S & +VCCSA

SIZE	CODE	DOC. NUMBER	REV
A3	CS	1310A24245-0-MTR	A

SHEET 10 OF 51

CHANGE by Chang, Irene 22-Mar-2011

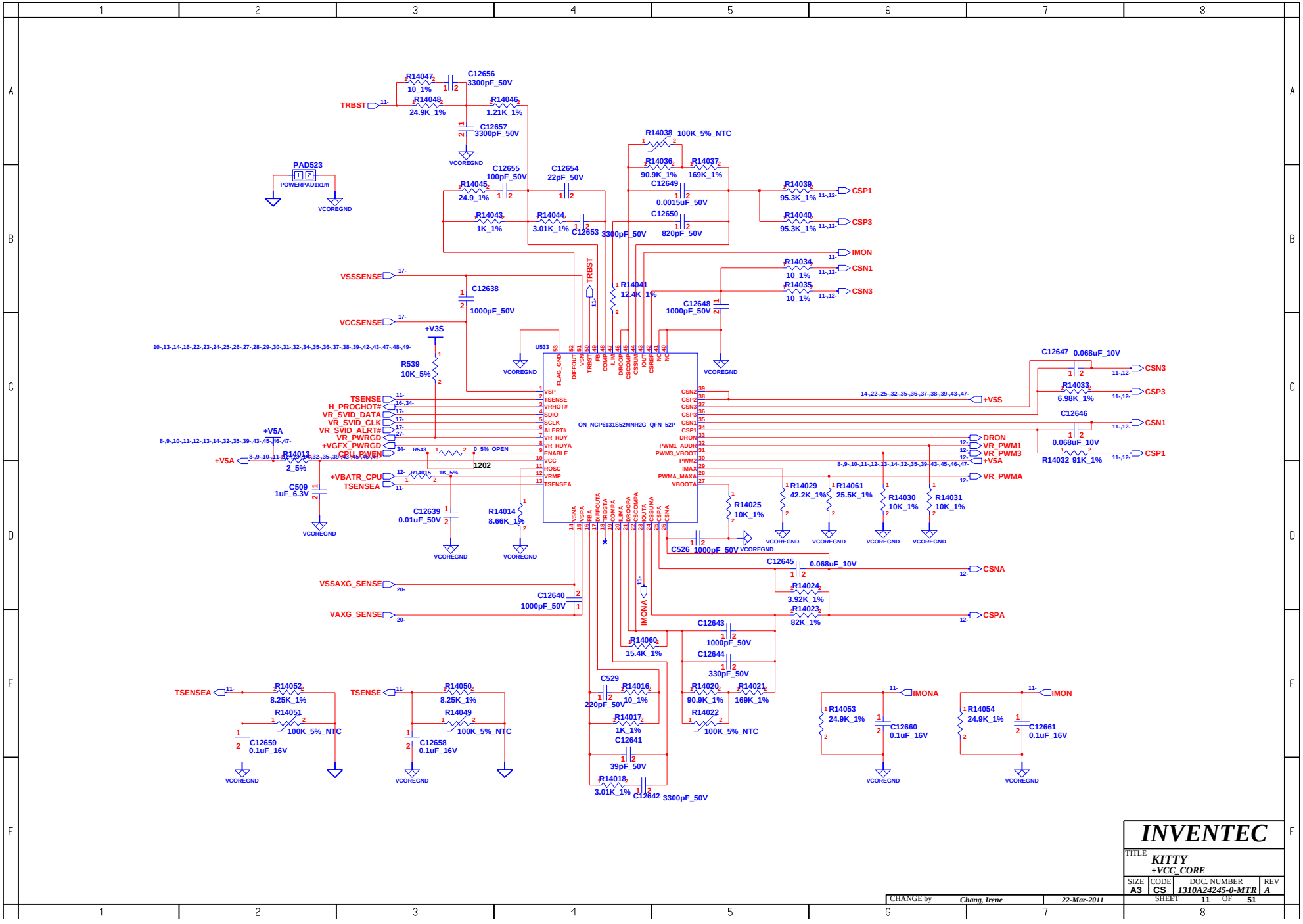

INVENTEC

TITLE KITTY +VCC_CORE

SIZE	CODE	DOC. NUMBER	REV
A3	CS	1310A24245-0-MTR	A

SHEET 11 OF 51

CHANGE by Chang, Irene 22-Mar-2011

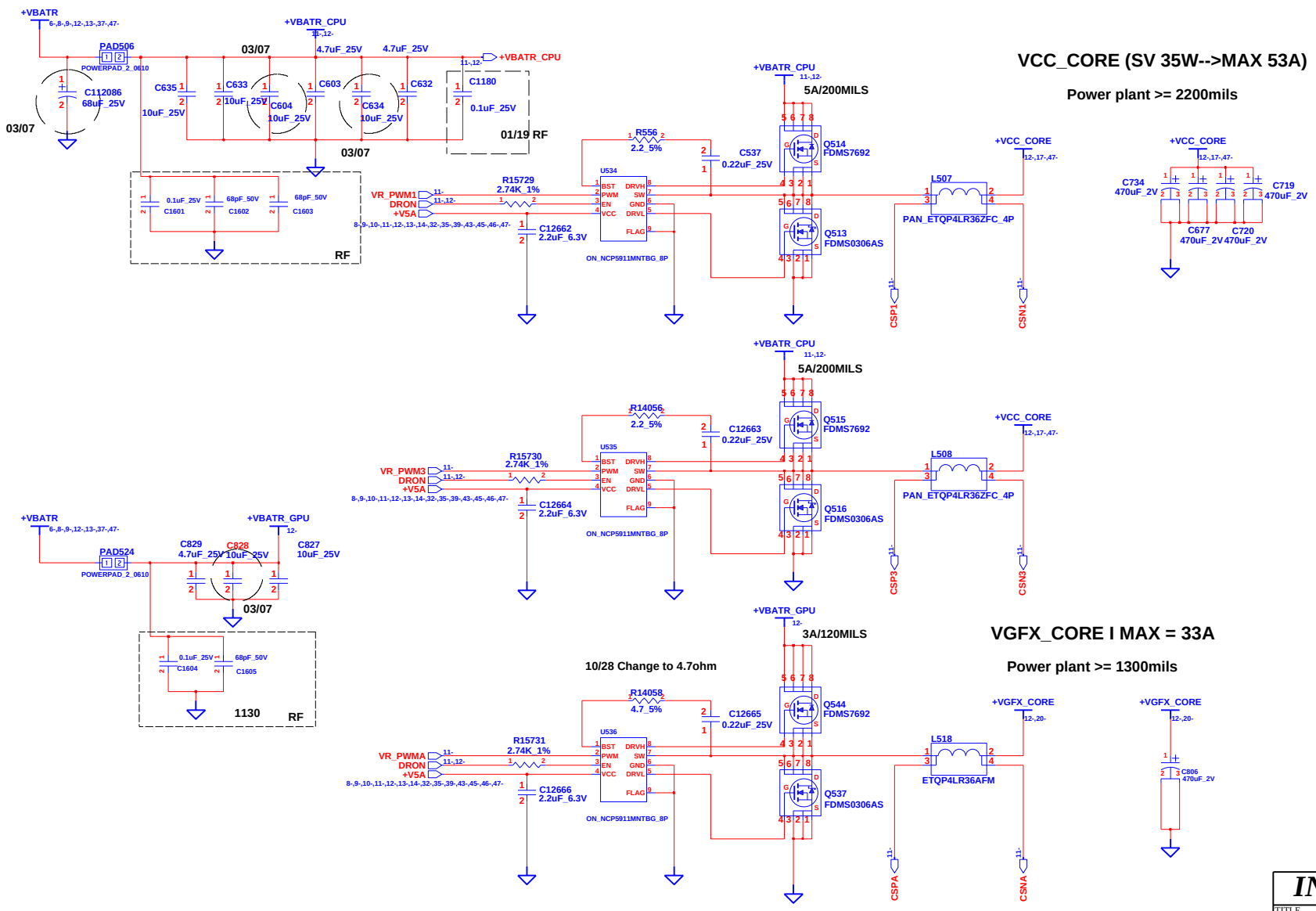

INVENTEC			
TITLE: KITTY +VGFX_CORE			
SIZE: A3	CODE: CS	DOC. NUMBER: 1310A24245-0-MTR	REV: A
CHANGE by: Chang, Irene	22-Mar-2011	SHEET 12 OF 51	

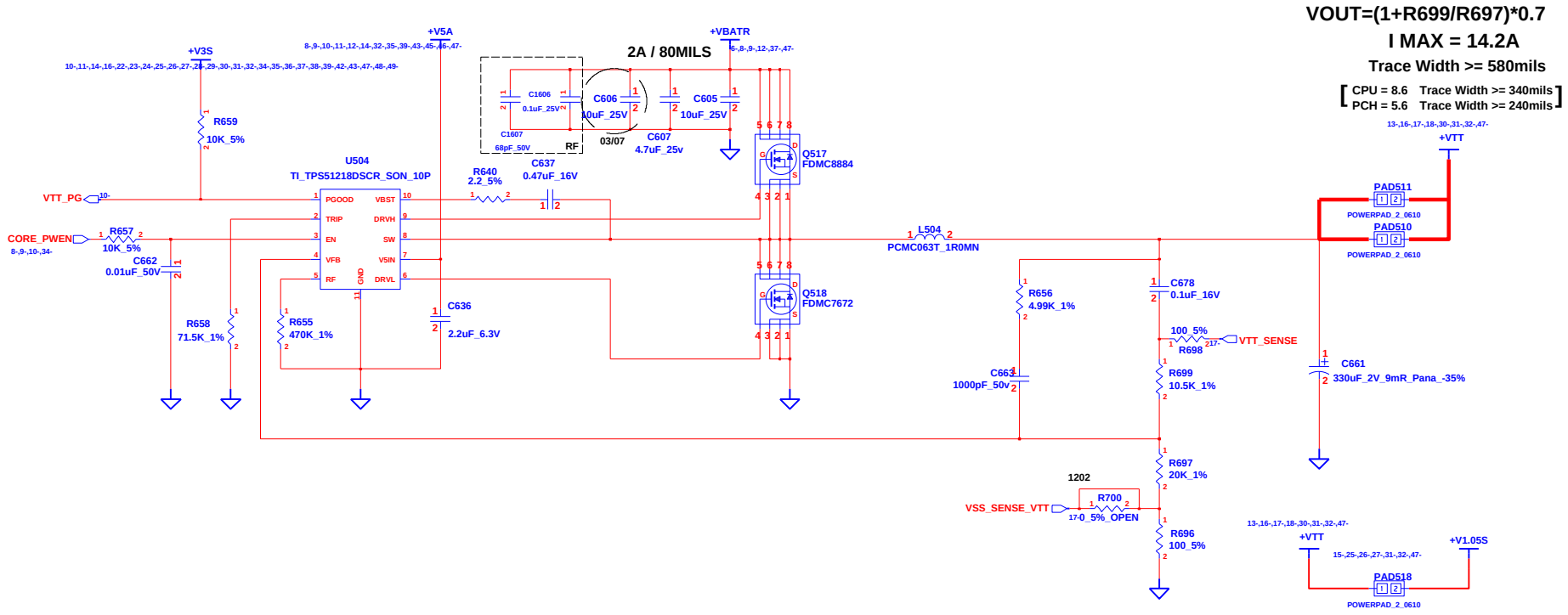

10/31 DEL +V1.05S

CHANGE by	Chang, Irene	22-Mar-2011	

INVENTEC

TITLE: *KITTY*
VTT & V1.05S

SIZE	CODE	DOC. NUMBER	REV
A3	CS	1310A24245-0-MTR	A

SHEET 13 OF 51

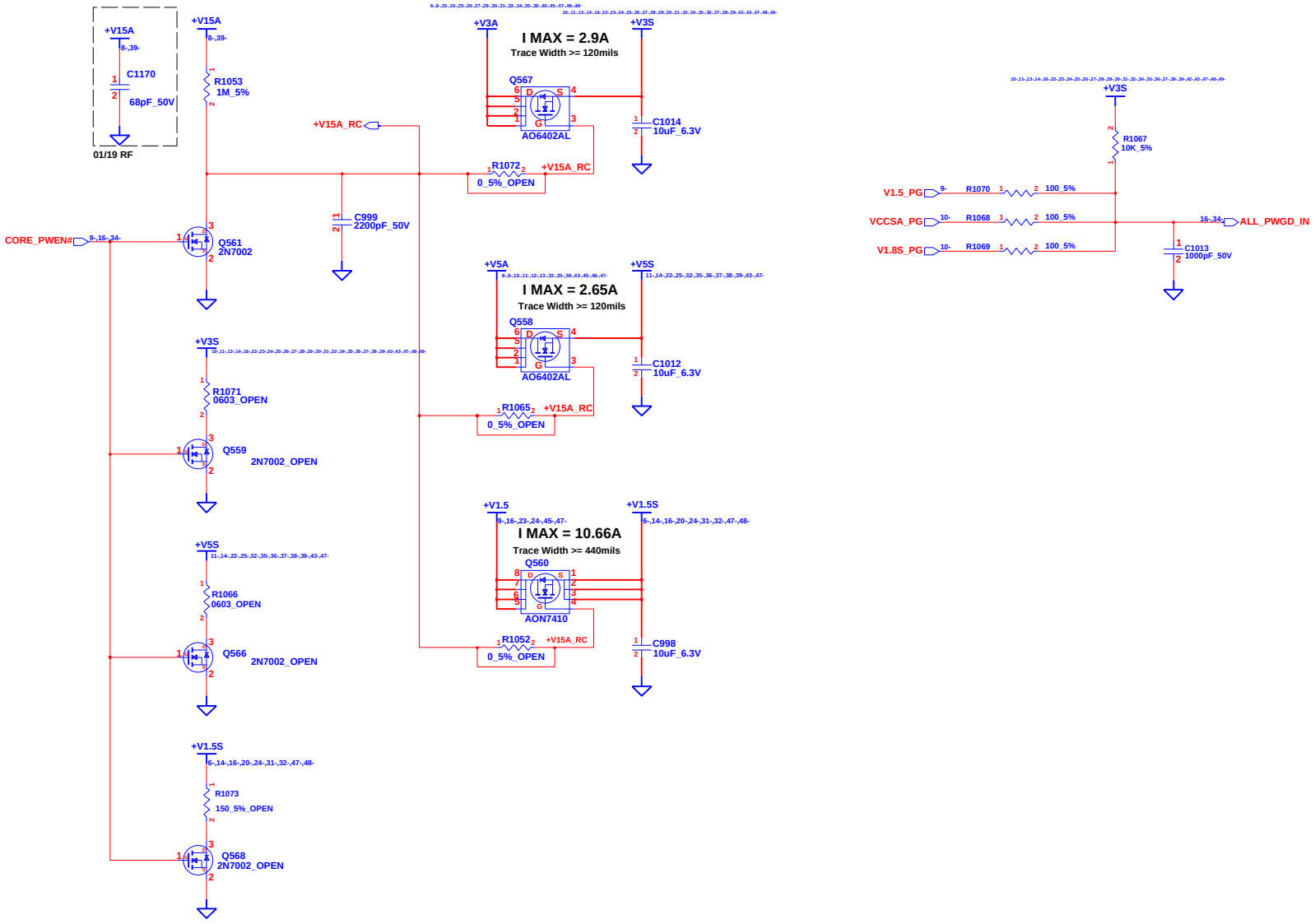

CHANGE by	Chang, Irene	22-Mar-2011	

INVENTEC

TITLE: *KITTY*
+V5S & +V3S

SIZE	CODE	DOC. NUMBER	REV
A3	CS	1310A24245-0-MTR	A

SHEET 14 OF 51

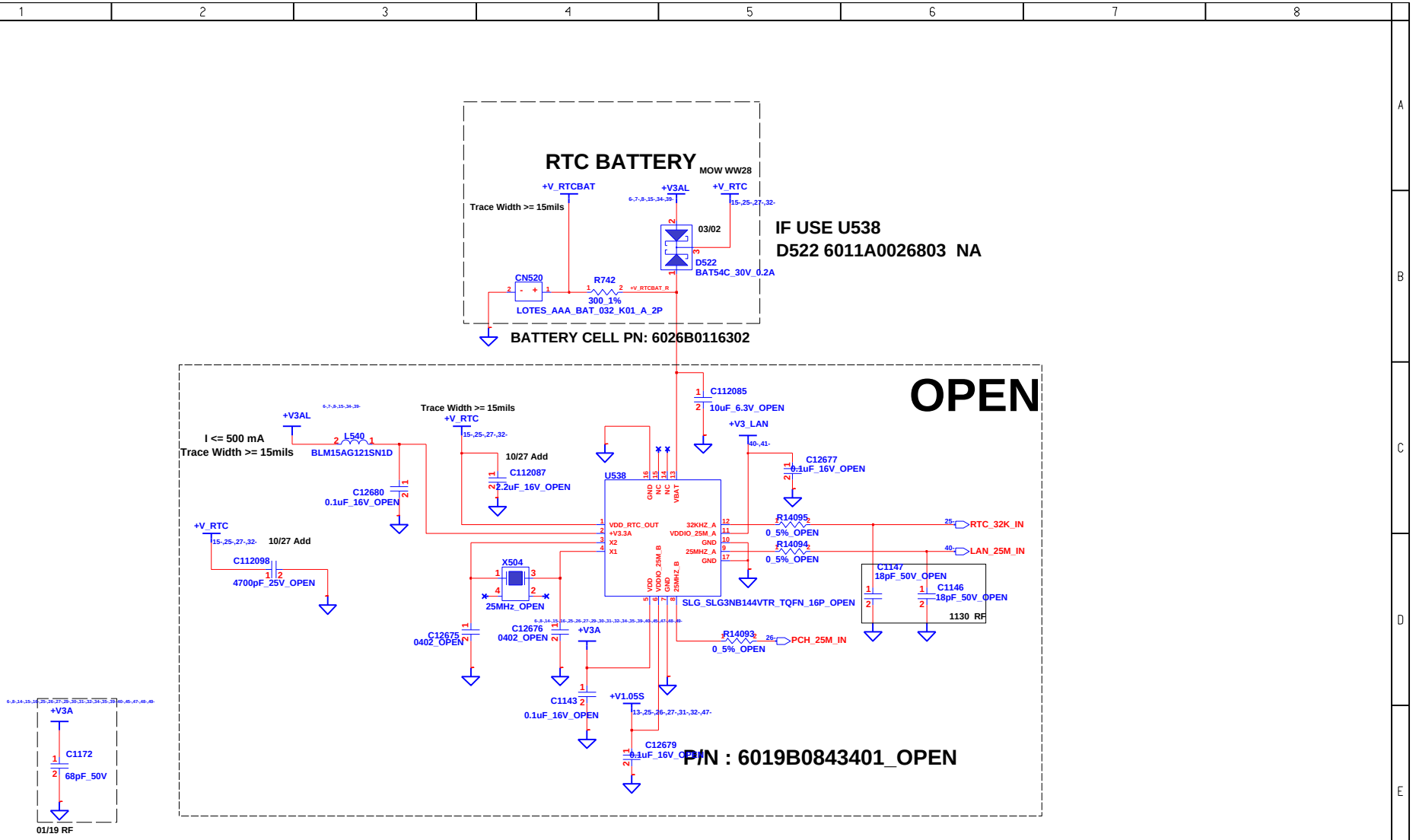

INVENTEC			
TITLE KITTY BLANK			
SIZE A3	CODE CS	DOC. NUMBER 1310A24245-0-MTR	REV A
SHEET 15 OF 51			

CHANGE by Chang, Irene 22-Mar-2011

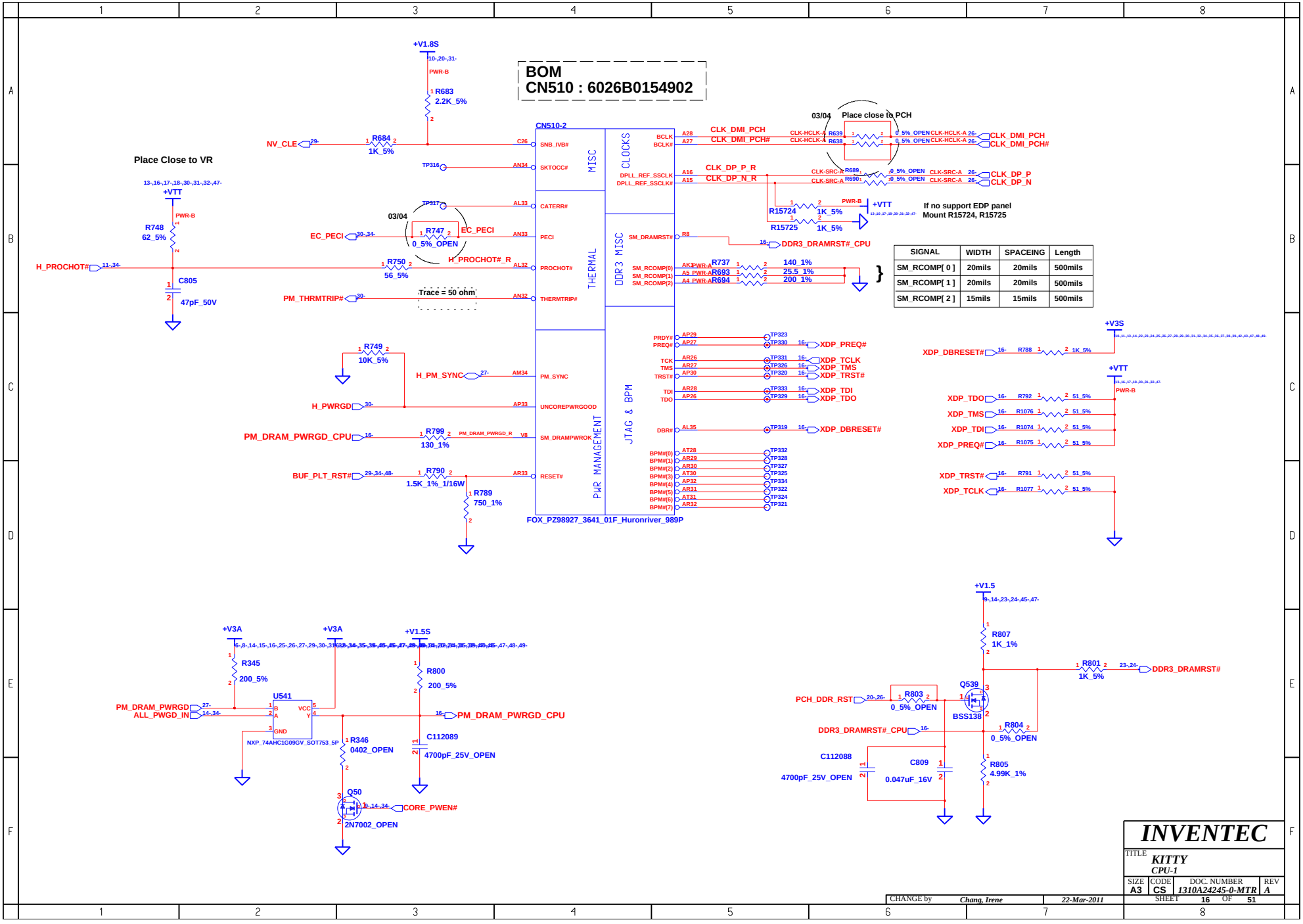

SIGNAL	WIDTH	SPACEING	Length
SM_RCOMP[0]	20mils	20mils	500mils
SM_RCOMP[1]	20mils	20mils	500mils
SM_RCOMP[2]	15mils	15mils	500mils

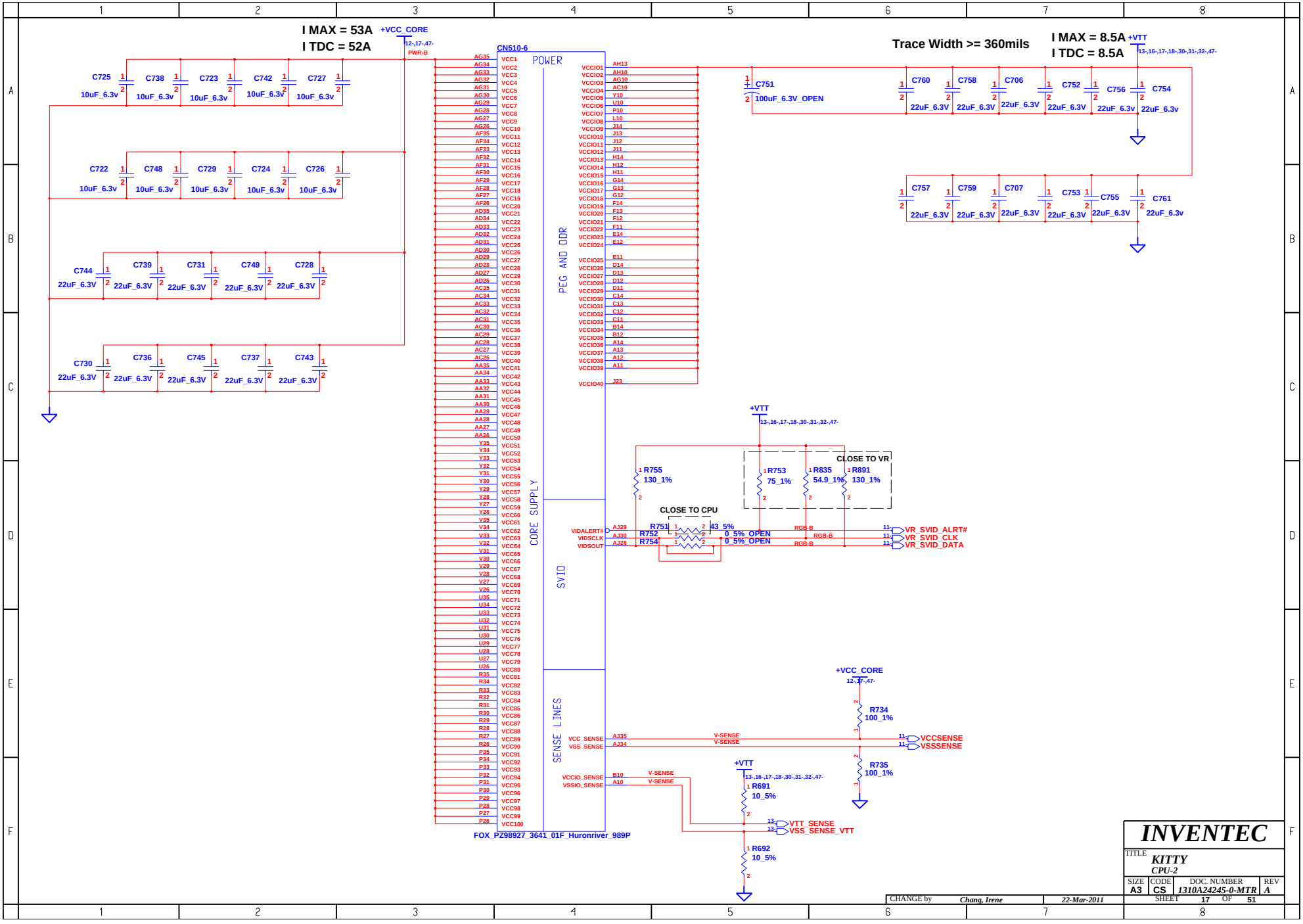
I MAX = 53A
I TDC = 52A
+VCC_CORE
12-,17-,47-
PWR-B
C725 10uF_6.3v
C738 10uF_6.3v
C723 10uF_6.3v
C742 10uF_6.3v
C727 10uF_6.3v
C722 10uF_6.3v
C748 10uF_6.3v
C729 10uF_6.3v
C724 10uF_6.3v
C726 10uF_6.3v
C744 22uF_6.3V
C739 22uF_6.3V
C731 22uF_6.3V
C749 22uF_6.3V
C728 22uF_6.3V
C730 22uF_6.3V
C736 22uF_6.3V
C745 22uF_6.3V
C737 22uF_6.3V
C743 22uF_6.3V
CN510-6
POWER
PEG AND DDR
CORE SUPPLY
SVID
SENSE LINES
FOX_PZ98927_3641_01F_Huronriver_989P
Trace Width >= 360mils
I MAX = 8.5A
I TDC = 8.5A
+VTT
13-,16-,17-,18-,30-,31-,32-,47-
C751 100uF_6.3V_OPEN
C760 22uF_6.3V
C758 22uF_6.3V
C706 22uF_6.3V
C752 22uF_6.3V
C756 22uF_6.3v
C754 22uF_6.3v
C757 22uF_6.3V
C759 22uF_6.3V
C707 22uF_6.3V
C753 22uF_6.3V
C755 22uF_6.3V
C761 22uF_6.3v
R755 130_1%
R753 75_1%
R835 54.9_1%
R891 130_1%
CLOSE TO VR
CLOSE TO CPU
R751 43_5%
R752 0_5% OPEN
R754 0_5% OPEN
VIDALERT#
VIDSCLK
VIDSOUT
RGB-B
VR_SVID_ALRT#
VR_SVID_CLK
VR_SVID_DATA
+VCC_CORE
R734 100_1%
R735 100_1%
VCC_SENSE
VSS_SENSE
V-SENSE
VCCSENSE
VSSSENSE
VCCIO_SENSE
VSSIO_SENSE
R691 10_5%
R692 10_5%
VTT_SENSE
VSS_SENSE_VTT
INVENTEC
TITLE
KITTY
CPU-2
SIZE A3
CODE CS
DOC. NUMBER 1310A24245-0-MTR
REV A
SHEET 17 OF 51
CHANGE by Chang, Irene
22-Mar-2011

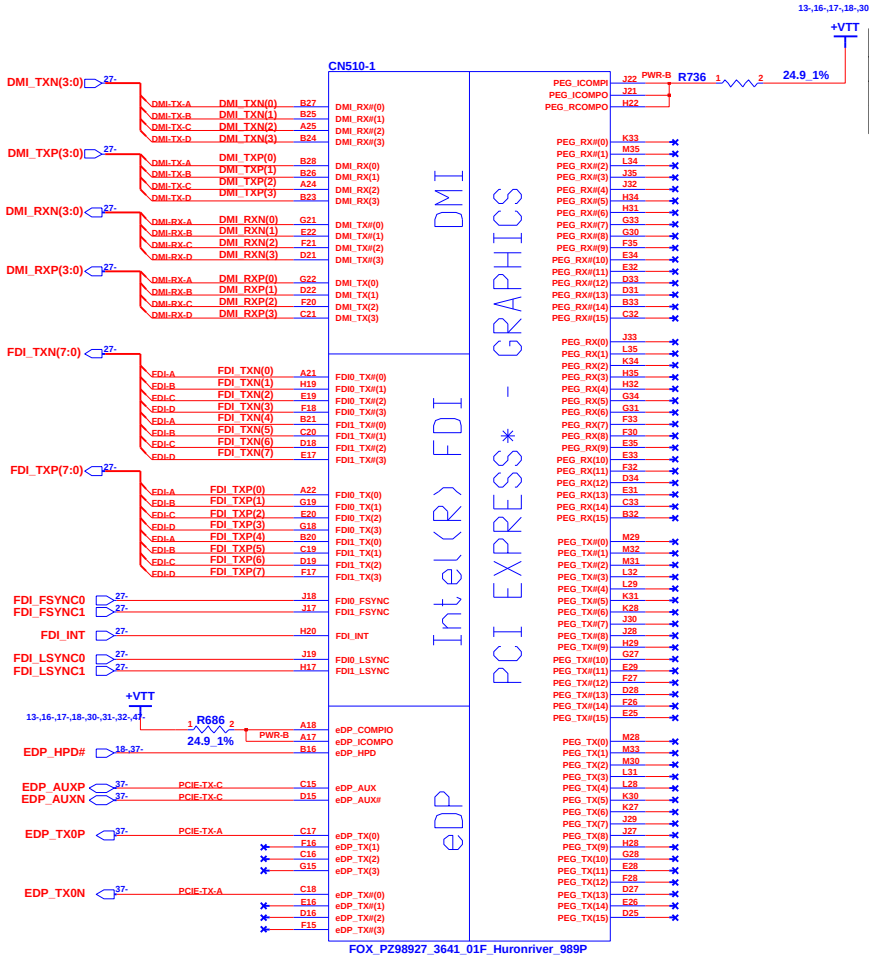

SIGNAL	WIDTH	SPACING	LENGTH
DP_COMPIO	4mils	15mils	500mils
DP_ICOMPO	12mils	15mils	500mils

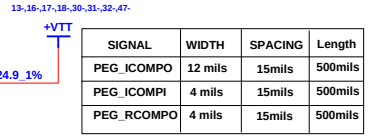

SIGNAL	WIDTH	SPACING	Length
PEG_ICOMPO	12 mils	15mils	500mils
PEG_ICOMPI	4 mils	15mils	500mils
PEG_RCOMPO	4 mils	15mils	500mils

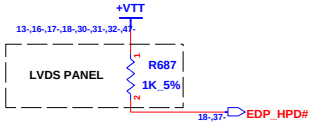

EDP_HPD#

1 : LVDS Panel

0 : eDP Panel

CHANGE by	*Chang, Irene*	*22-Mar-2011*	

INVENTEC

TITLE *KITTY*
CPU-3

SIZE	CODE	DOC. NUMBER	REV
A3	CS	*1310A24245-0-MTR*	*A*

SHEET 18 OF 51

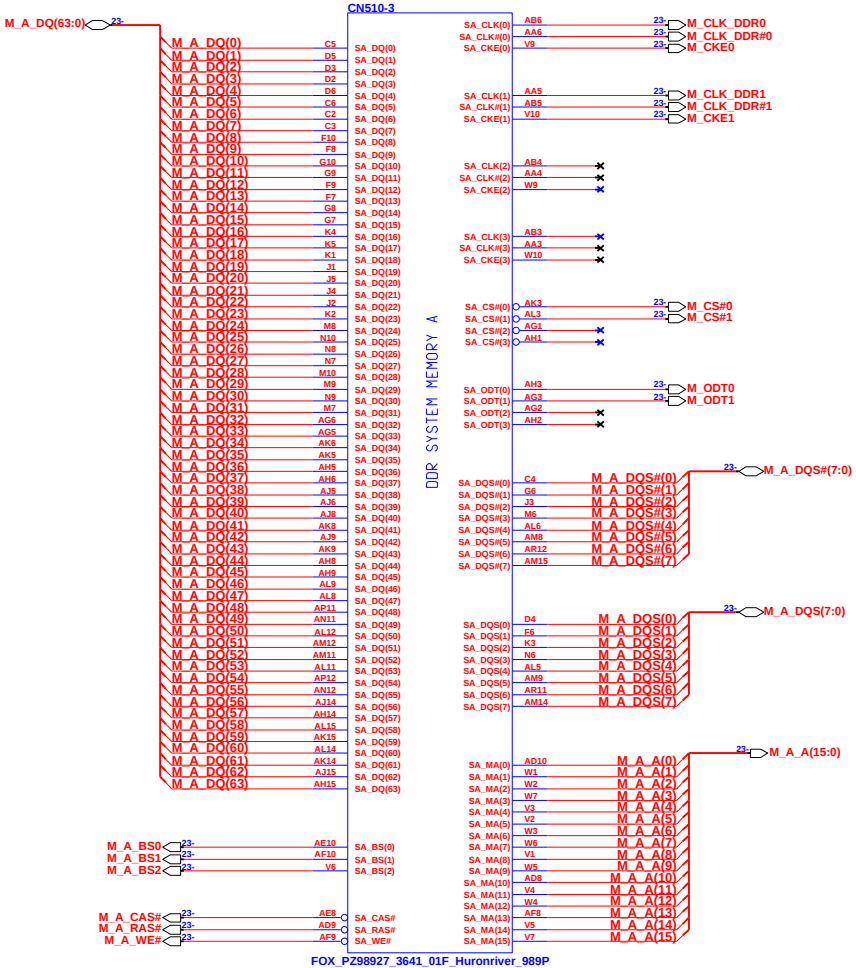

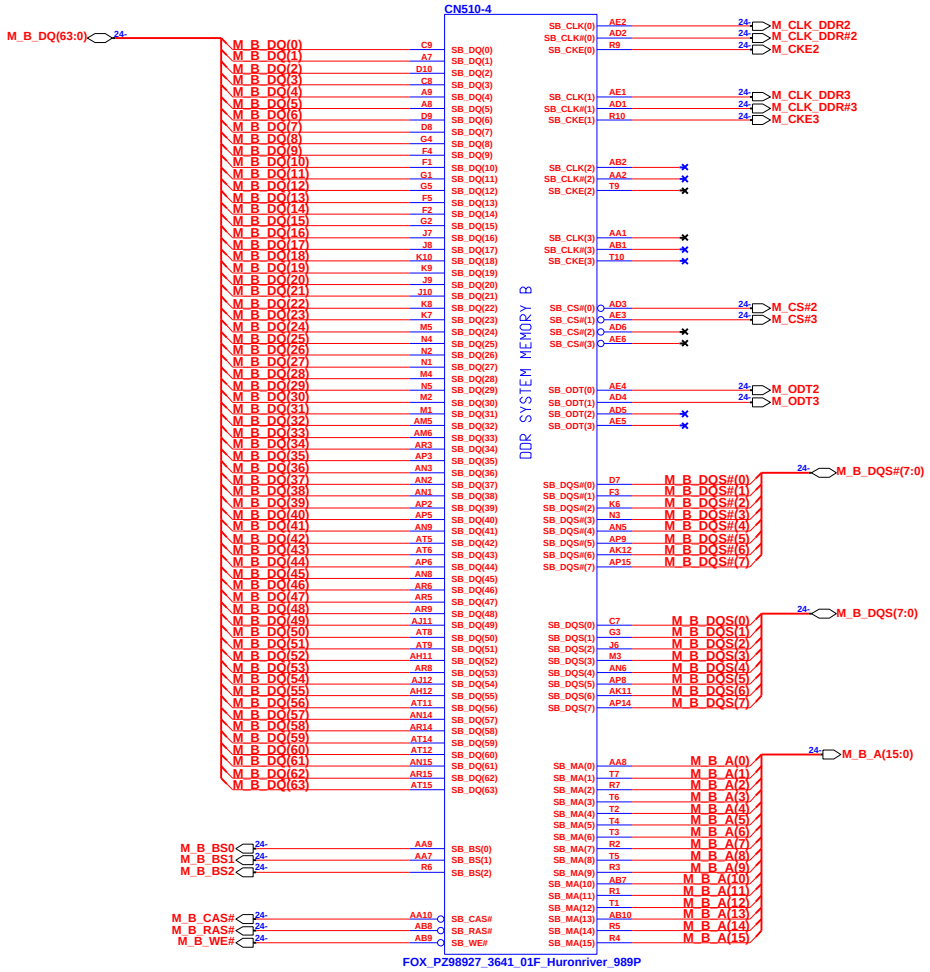

CHANGE by	Chang, Irene	22-Mar-2011	

INVENTEC

TITLE: KITTY
CPU-4

SIZE	CODE	DOC. NUMBER	REV
A3	CS	1310A24245-0-MTR	A

SHEET 19 OF 51

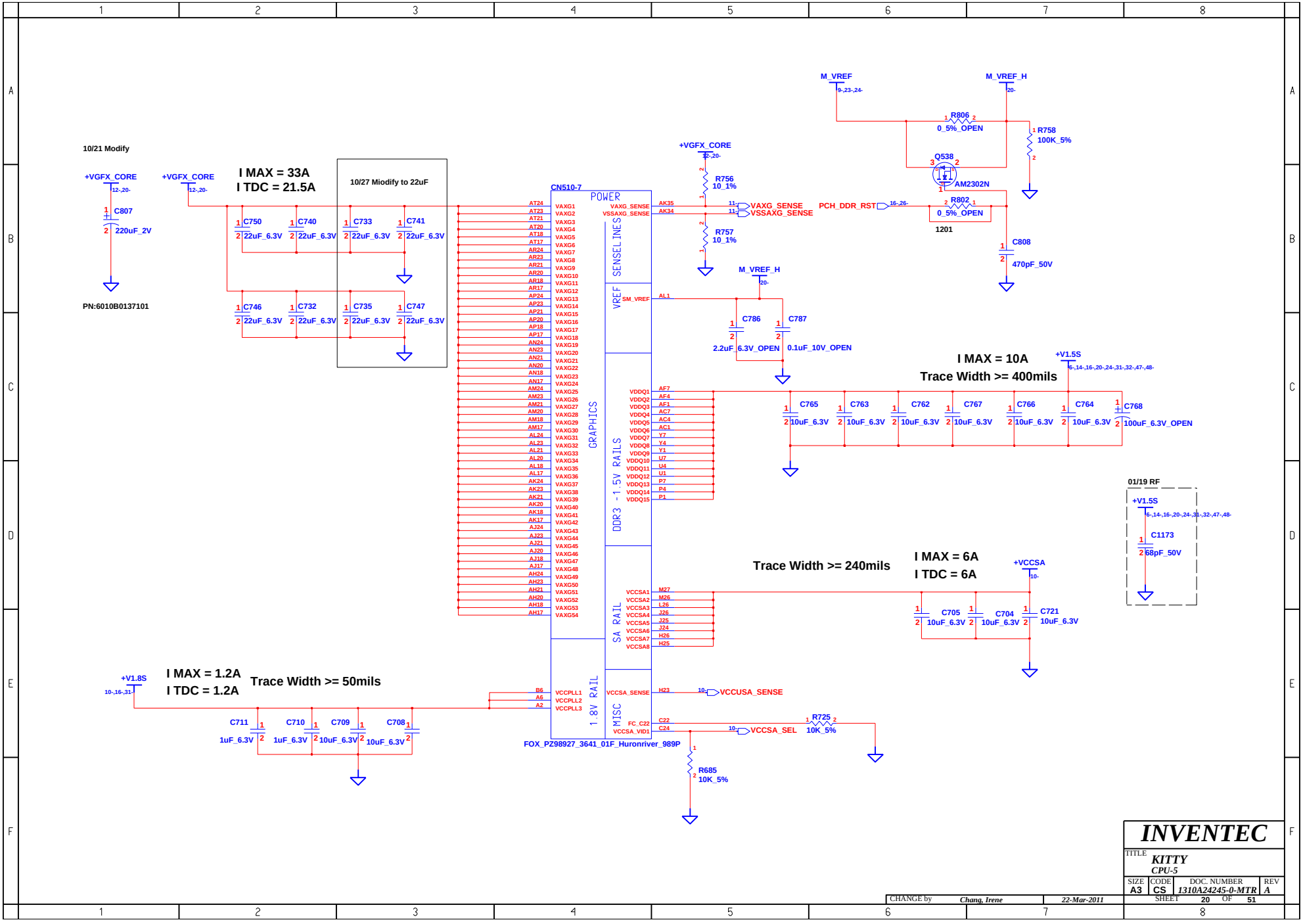
10/21 Modify
+VGFX_CORE
12-,20-
C807
220uF_2V
PN:6010B0137101
+VGFX_CORE
12-,20-
I MAX = 33A
I TDC = 21.5A
10/27 Miodify to 22uF
C750 22uF_6.3V
C740 22uF_6.3V
C733 22uF_6.3V
C741 22uF_6.3V
C746 22uF_6.3V
C732 22uF_6.3V
C735 22uF_6.3V
C747 22uF_6.3V
CN510-7
POWER
GRAPHICS
SENSELINES
VREF
DDR3 - 1.5V RAILS
SA RAIL
1.8V RAIL
MISC
VAXG_SENSE
VSSAXG_SENSE
SM_VREF
VCCSA_SENSE
FC_C22
VCCSA_VID1
FOX_PZ98927_3641_01F_Huronriver_989P
+VGFX_CORE
12-,20-
R756 10_1%
R757 10_1%
VAXG_SENSE
VSSAXG_SENSE
M_VREF
9-,23-,24-
M_VREF_H
20-
R806 0_5%_OPEN
R758 100K_5%
Q538
AM2302N
PCH_DDR_RST
16-,26-
R802 0_5%_OPEN
1201
C808 470pF_50V
M_VREF_H
20-
C786 2.2uF_6.3V_OPEN
C787 0.1uF_10V_OPEN
I MAX = 10A
Trace Width >= 400mils
+V1.5S
6-,14-,16-,20-,24-,31-,32-,47-,48-
C765 10uF_6.3V
C763 10uF_6.3V
C762 10uF_6.3V
C767 10uF_6.3V
C766 10uF_6.3V
C764 10uF_6.3V
C768 100uF_6.3V_OPEN
01/19 RF
+V1.5S
6-,14-,16-,20-,24-,31-,32-,47-,48-
C1173 68pF_50V
Trace Width >= 240mils
I MAX = 6A
I TDC = 6A
+VCCSA
10-
C705 10uF_6.3V
C704 10uF_6.3V
C721 10uF_6.3V
+V1.8S
10-,16-,31-
I MAX = 1.2A
I TDC = 1.2A
Trace Width >= 50mils
C711 1uF_6.3V
C710 1uF_6.3V
C709 10uF_6.3V
C708 10uF_6.3V
VCCSA_SENSE
VCCUSA_SENSE
VCCSA_SEL
R725 10K_5%
R685 10K_5%
INVENTEC
TITLE
KITTY
CPU-5
SIZE A3
CODE CS
DOC. NUMBER 1310A24245-0-MTR
REV A
SHEET 20 OF 51
CHANGE by Chang, Irene
22-Mar-2011

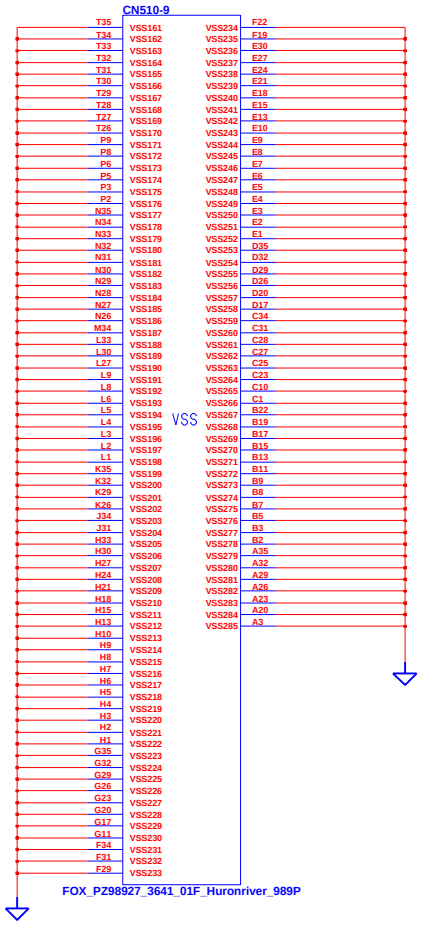

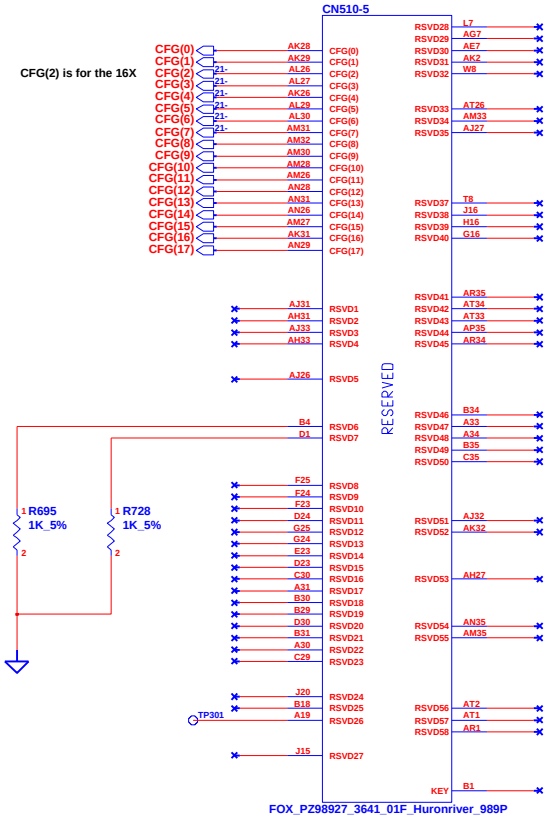

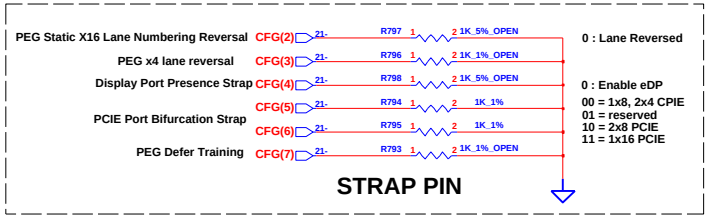

CHANGE by	Chang, Irene	22-Mar-2011	

INVENTEC

TITLE: KITTY CPU-6

SIZE	CODE	DOC. NUMBER	REV
A3	CS	1310A24245-0-MTR	A

SHEET 21 OF 51

*BOM
CN500 : 6012A0081607

FAN CONN

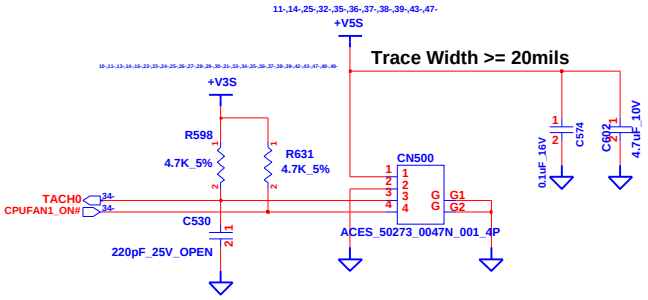

FOR UMA SKU

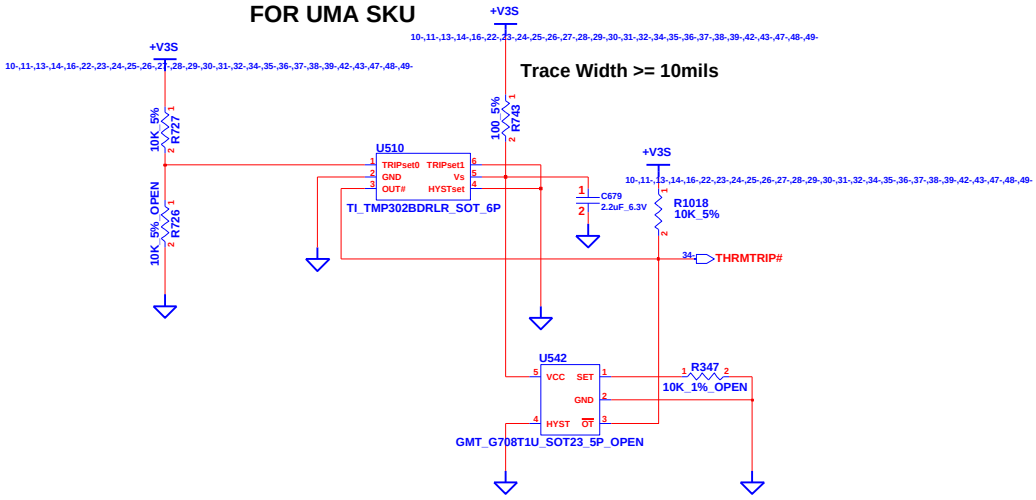

INVENTEC

TITLE
KITTY
Thermal, Fan & XDP

SIZE	CODE	DOC. NUMBER	REV
A3	CS	*1310A24245-0-MTR*	*A*

CHANGE by *Chang, Irene* *22-Mar-2011*

SHEET 22 OF 51

DDR3 SO-DIMM 1

Main : 6026B0179601
2nd : 6026B0157609

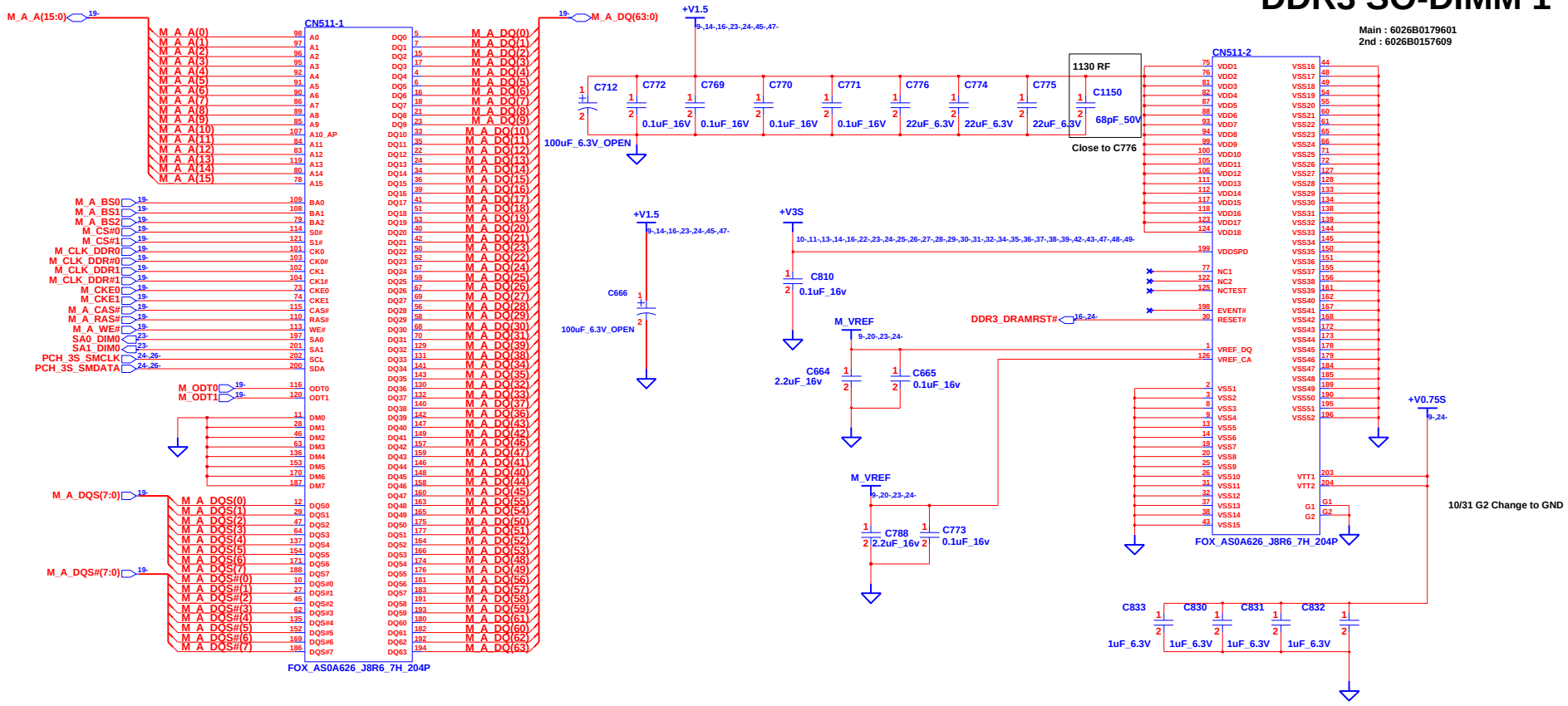

NOTE:

IF SA0_DIM0=0 , SA1_DIM0=0
SO-DIMMA SPD ADDRESS IS 0xA0
SO-DIMMA TS ADDRESS IS 0x30

IF SA0_DIM0=1 , SA1_DIM0=0
SO-DIMMA SPD ADDRESS IS 0xA2
SO-DIMMA TS ADDRESS IS 0x32

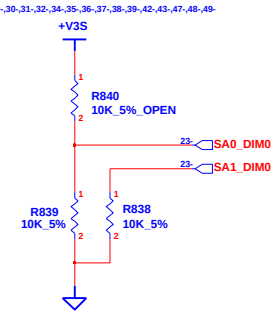

For SVTP test used.

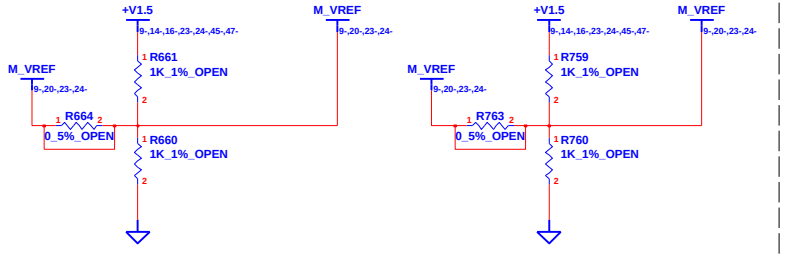

INVENTEC

TITLE: KITTY DDR3-1

SIZE	CODE	DOC. NUMBER	REV
A3	CS	1310A24245-0-MTR	A

SHEET 23 OF 51

CHANGE by Chang, Irene 22-Mar-2011

DDR3 SO-DIMM 2

CN1005 (lower) : 6026B0121102
*BOM

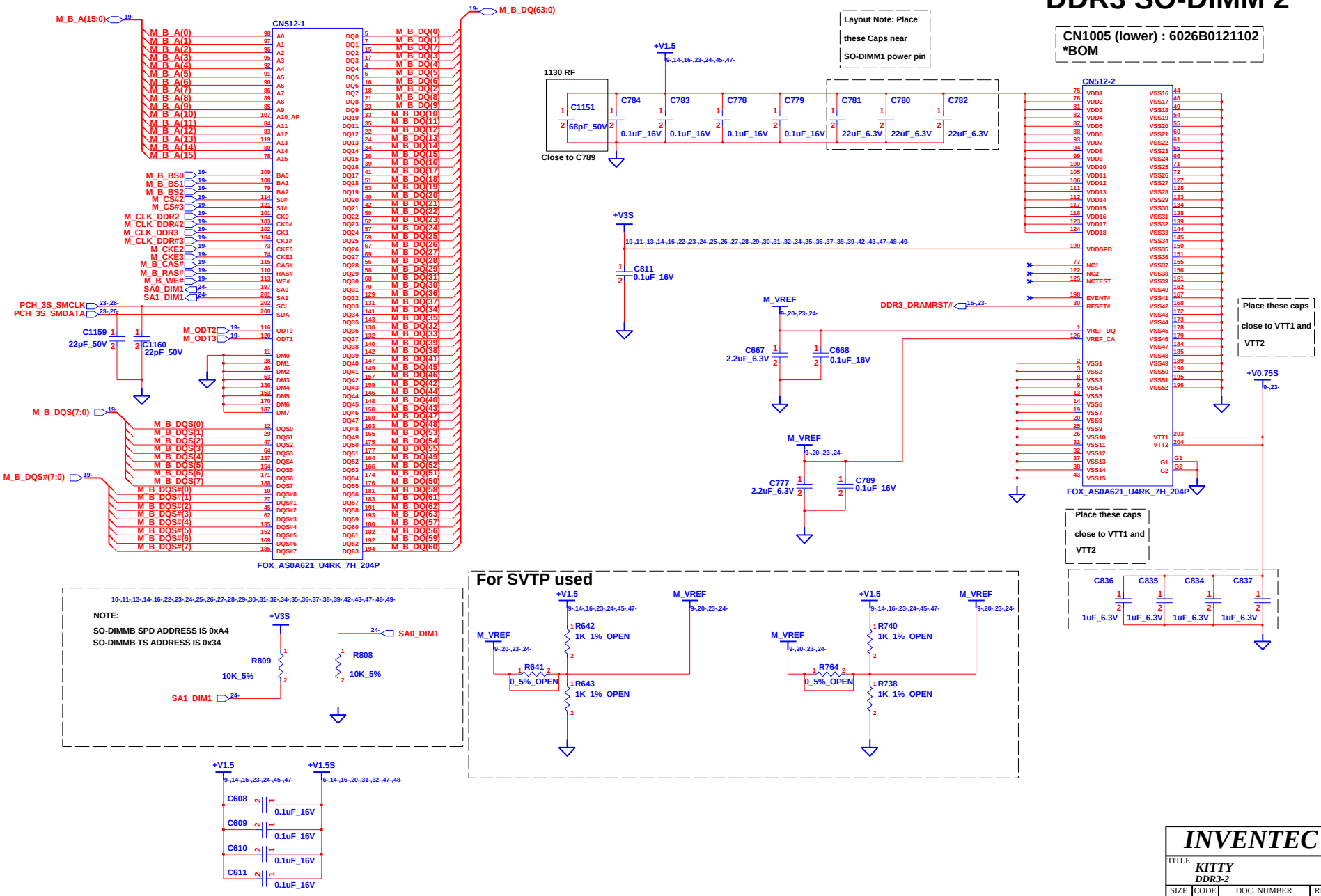

INVENTEC			
TITLE: KITTY DDR3-2			
SIZE A3	CODE CS	DOC. NUMBER 1310A24245-0-MTR	REV A
CHANGE by Chang, Irene	22-Mar-2011	SHEET 24 OF 51	

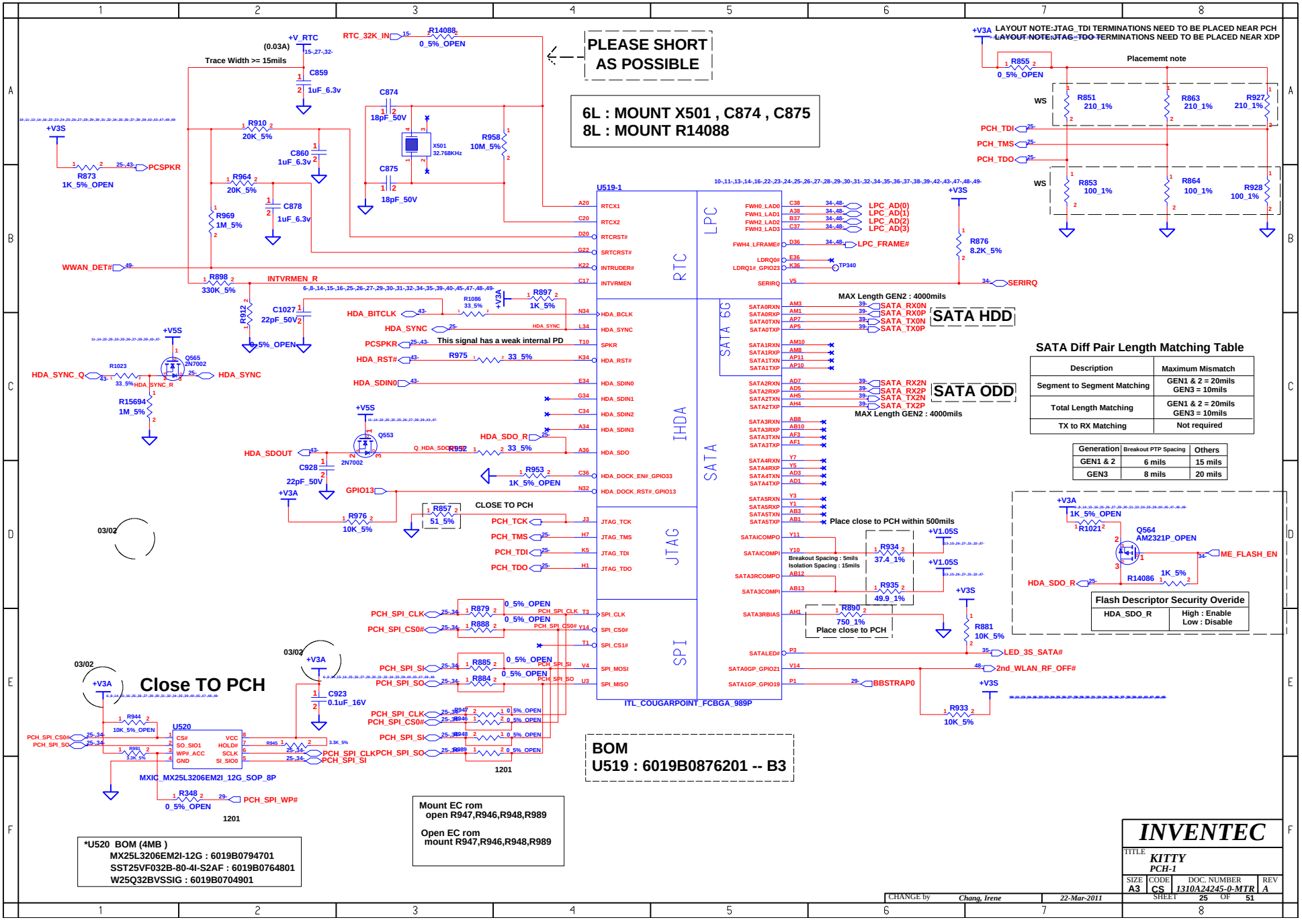

SATA Diff Pair Length Matching Table

Description	Maximum Mismatch
Segment to Segment Matching	GEN1 & 2 = 20mils GEN3 = 10mils
Total Length Matching	GEN1 & 2 = 20mils GEN3 = 10mils
TX to RX Matching	Not required

Generation	Breakout PTP Spacing	Others
GEN1 & 2	6 mils	15 mils
GEN3	8 mils	20 mils

Flash Descriptor Security Overide	
HDA_SDO_R	High : Enable Low : Disable

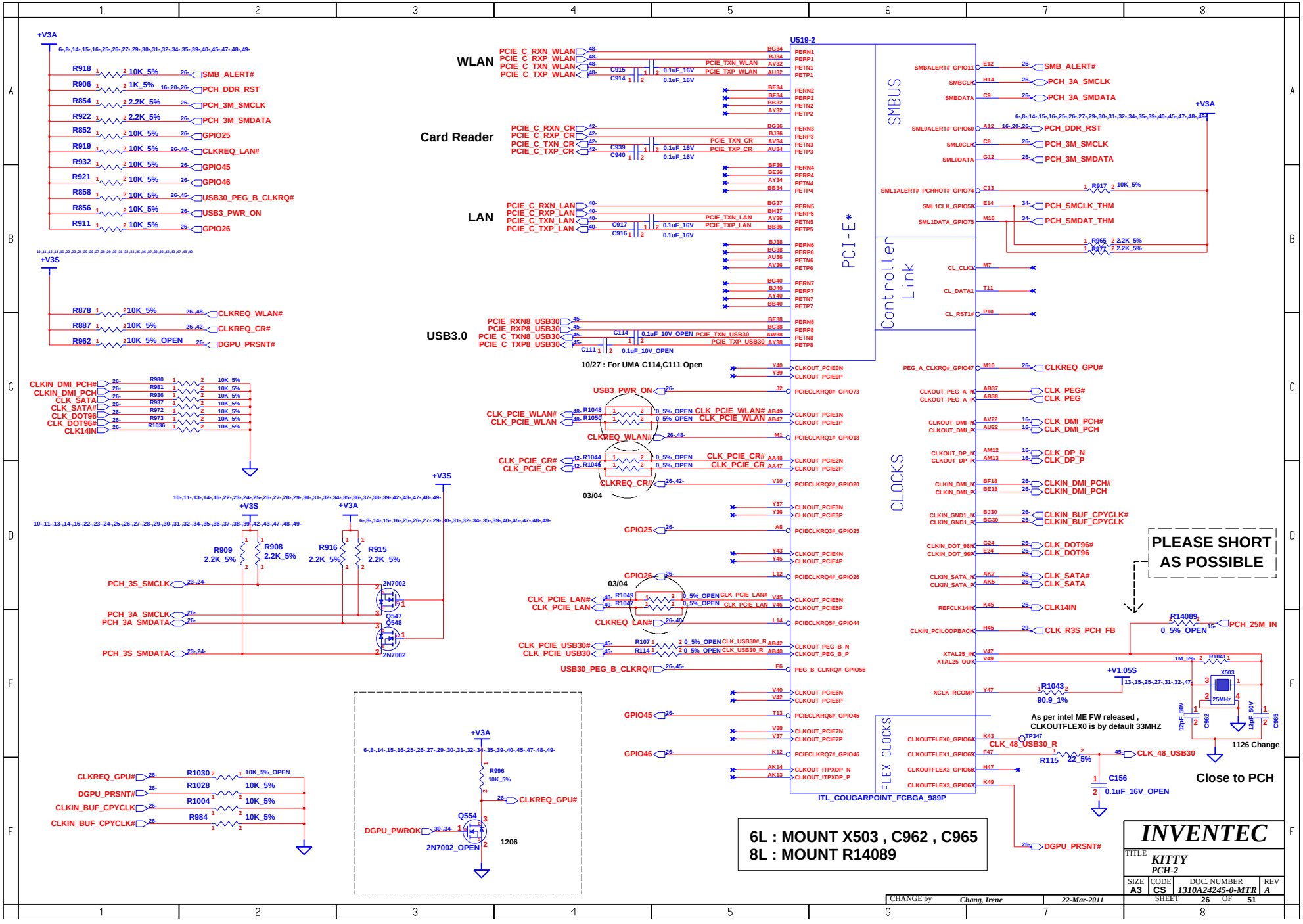
U519-2
WLAN
Card Reader
LAN
USB3.0
PCI-E*
Controller Link
SMBUS
CLOCKS
FLEX CLOCKS
ITL_COUGARPOINT_FCBGA_989P
10/27 : For UMA C114,C111 Open
03/04
PLEASE SHORT AS POSSIBLE
As per intel ME FW released , CLKOUTFLEX0 is by default 33MHZ
1126 Change
Close to PCH
6L : MOUNT X503 , C962 , C965
8L : MOUNT R14089
1206
2N7002_OPEN
INVENTEC
KITTY
PCH-2
SIZE A3
CODE CS
DOC. NUMBER 1310A24245-0-MTR
REV A
SHEET 26 OF 51
CHANGE by Chang, Irene
22-Mar-2011

Note: 1.SLP_SUS and SUSACK# are NC if DSW is not supported
2.DPWROK should connect to RSMRST# if DSW not supported
3.PCH_DPWROK pull up to +V3S enables DSW support. No install R5261 to disable DSW

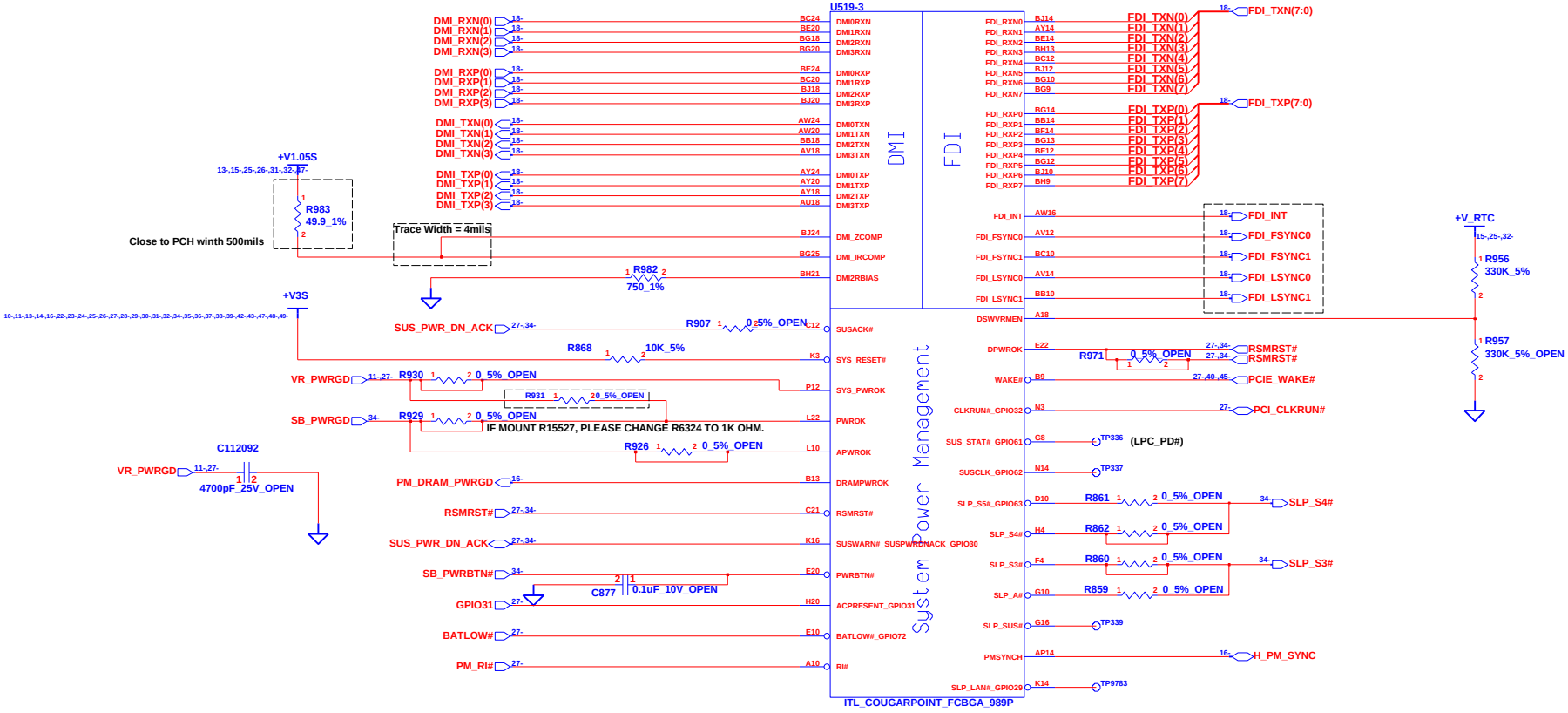

INVENTEC

TITLE KITTY
PCH-3

SIZE	CODE	DOC. NUMBER	REV
A3	CS	1310A24245-0-MTR	A

SHEET 27 OF 51

CHANGE by Chang, Irene 22-Mar-2011

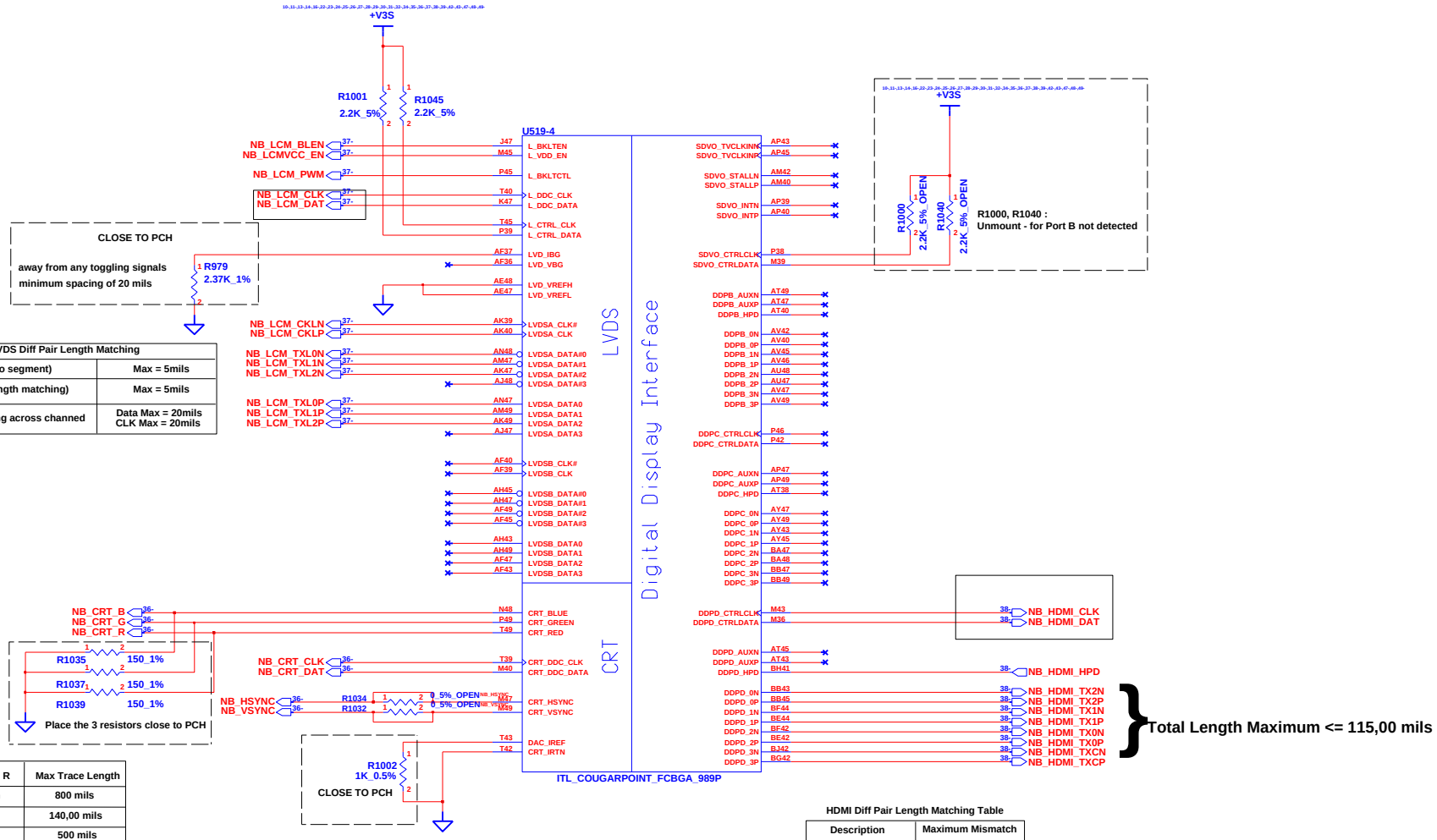

LVDS Diff Pair Length Matching	
Diff Pair (segment to segment)	Max = 5mils
Diff Pair (Overall length matching)	Max = 5mils
Pair to Pair Matching across channed	Data Max = 20mils CLK Max = 20mils

Parameter	Main Route R	Max Trace Length
LA (PCH Breakout)	37.5 ohm	800 mils
LB+LC (Main Route)	50 ohm	140,00 mils
LD (Filter Breakin)	50 ohm	500 mils
Total Motherboard trace		153,00 mils

HDMI Diff Pair Length Matching Table

Description	Maximum Mismatch
Intrapair Matching	+/- 5mils
Interpair (Pair to Pair)	Max = 500mils
CTRL_CLK & DATA	Max = 1000mils

INVENTEC

TITLE KITTY PCH-4

SIZE	CODE	DOC. NUMBER	REV
A3	CS	1310A24245-0-MTR	A

SHEET 28 OF 51

CHANGE by Chang, Irene 22-Mar-2011

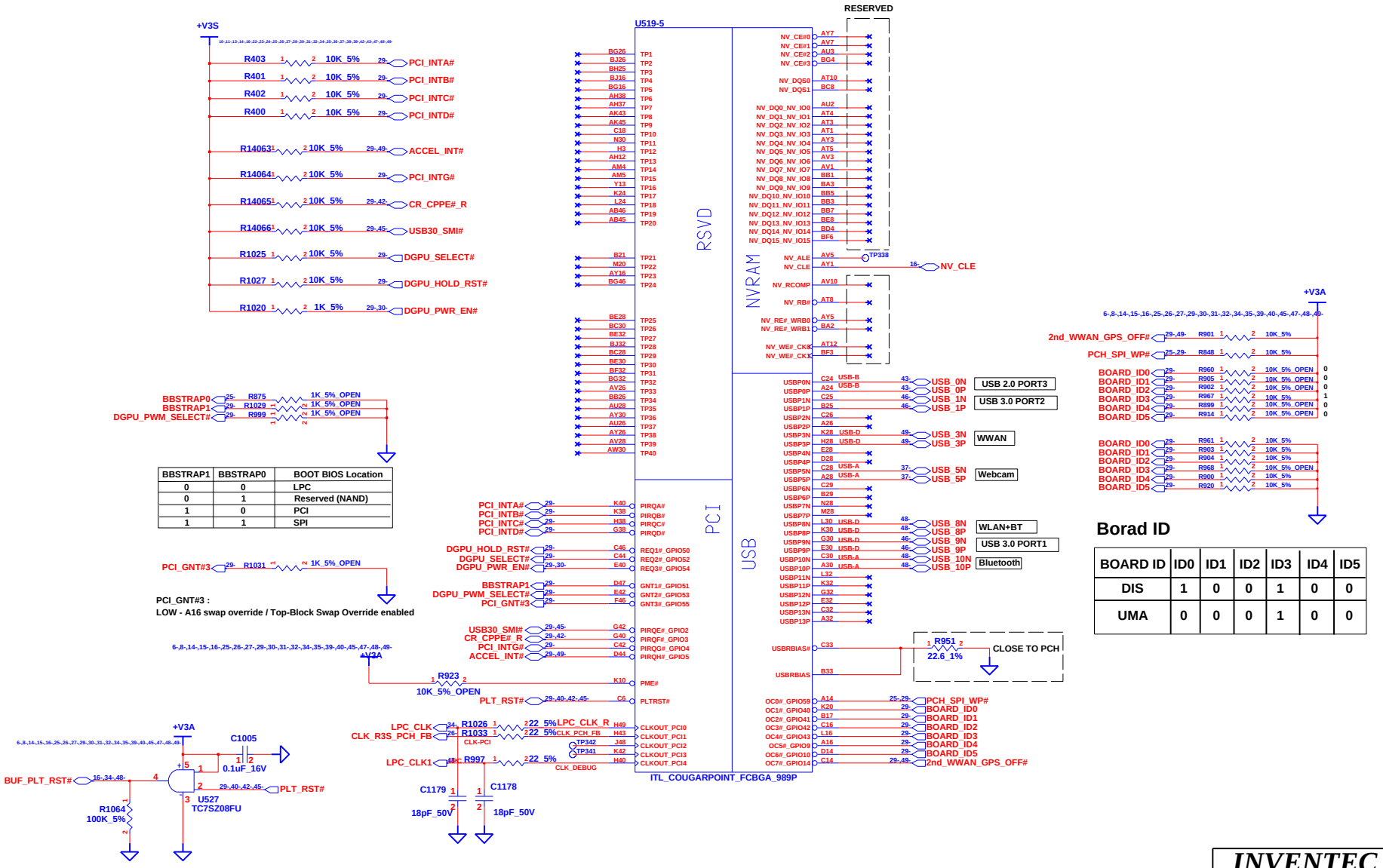

BBSTRAP1	BBSTRAP0	BOOT BIOS Location
0	0	LPC
0	1	Reserved (NAND)
1	0	PCI
1	1	SPI

Borad ID

BOARD ID	ID0	ID1	ID2	ID3	ID4	ID5
DIS	1	0	0	1	0	0
UMA	0	0	0	1	0	0

INVENTEC

TITLE KITTY PCH-5

SIZE	CODE	DOC. NUMBER	REV
A3	CS	1310A24245-0-MTR	A

SHEET 29 OF 51

CHANGE by Chang, Irene 22-Mar-2011

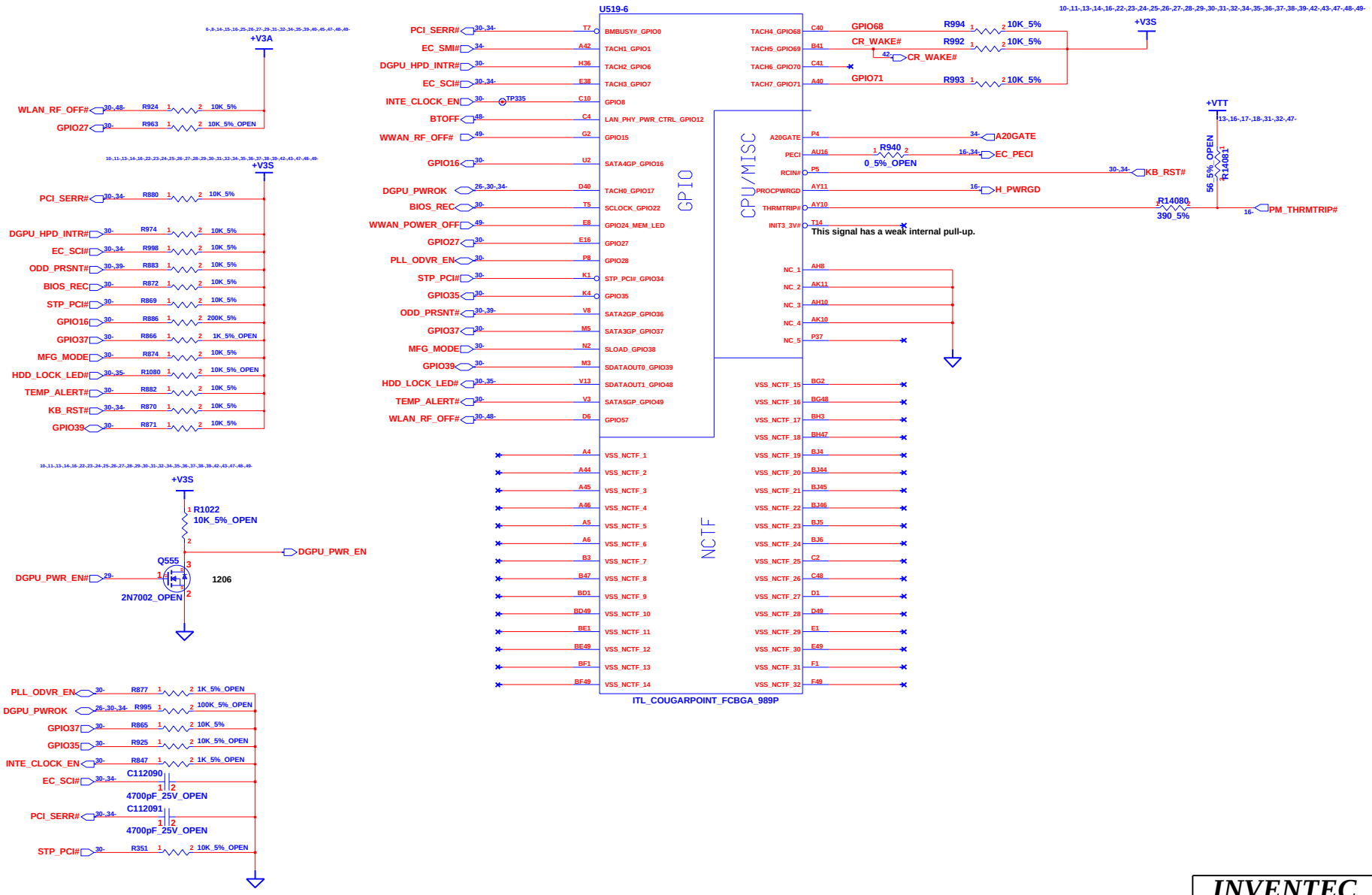

STP_PCI# (GPIO34)	HIGH (Default)	Webcam dual mic with IDT-TA7
	LOW	Webcam single mic with IDT-TA6

INVENTEC

TITLE KITTY PCH-6

SIZE	CODE	DOC. NUMBER	REV
A3	CS	1310A24245-0-MTR	A

SHEET 30 OF 51

CHANGE by Chang, Irene 22-Mar-2011

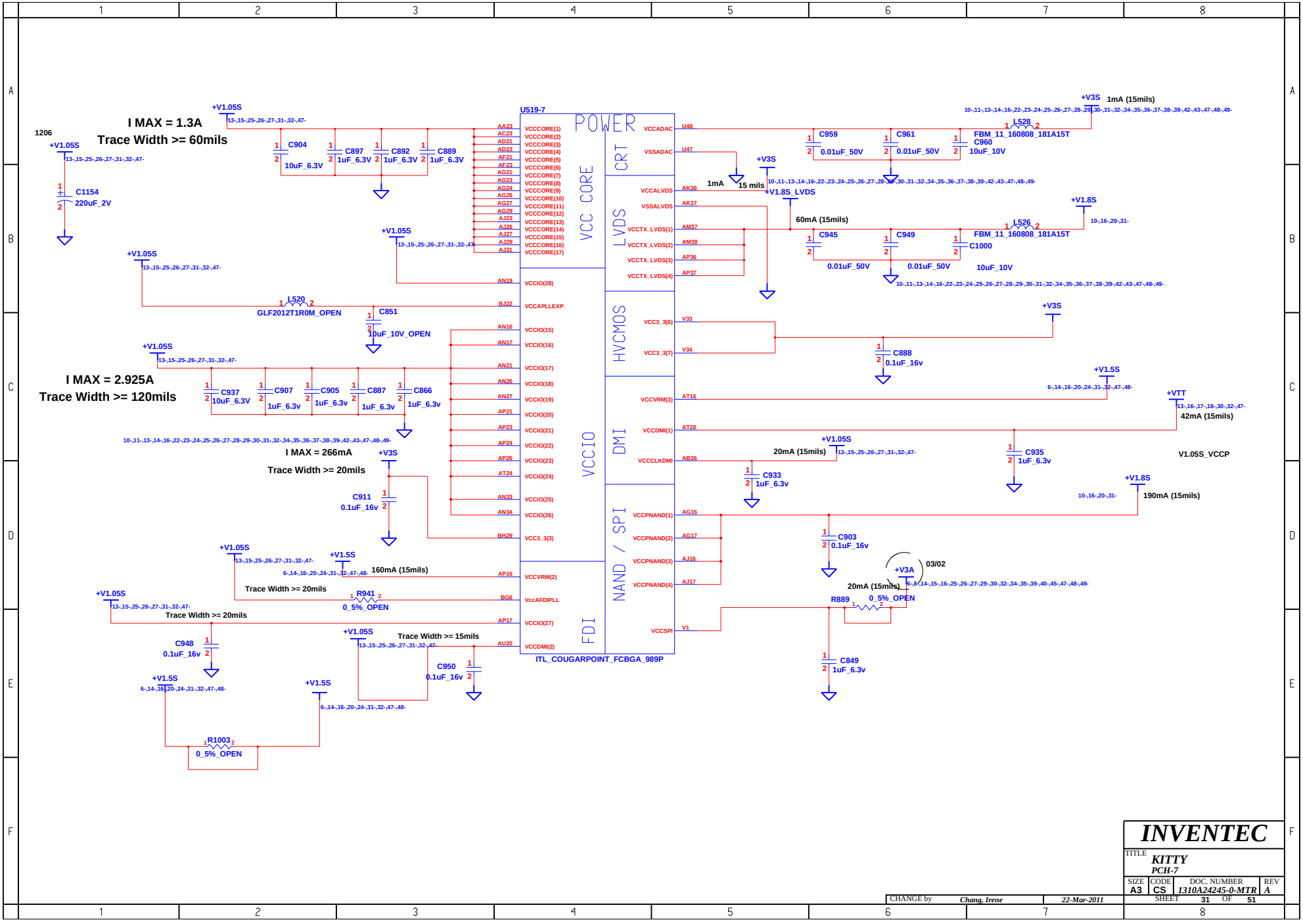

INVENTEC			
TITLE KITTY PCH-7			
SIZE A3	CODE CS	DOC. NUMBER 1310A24245-0-MTR	REV A
CHANGE by Chang, Irene	22-Mar-2011	SHEET 31 OF 51	

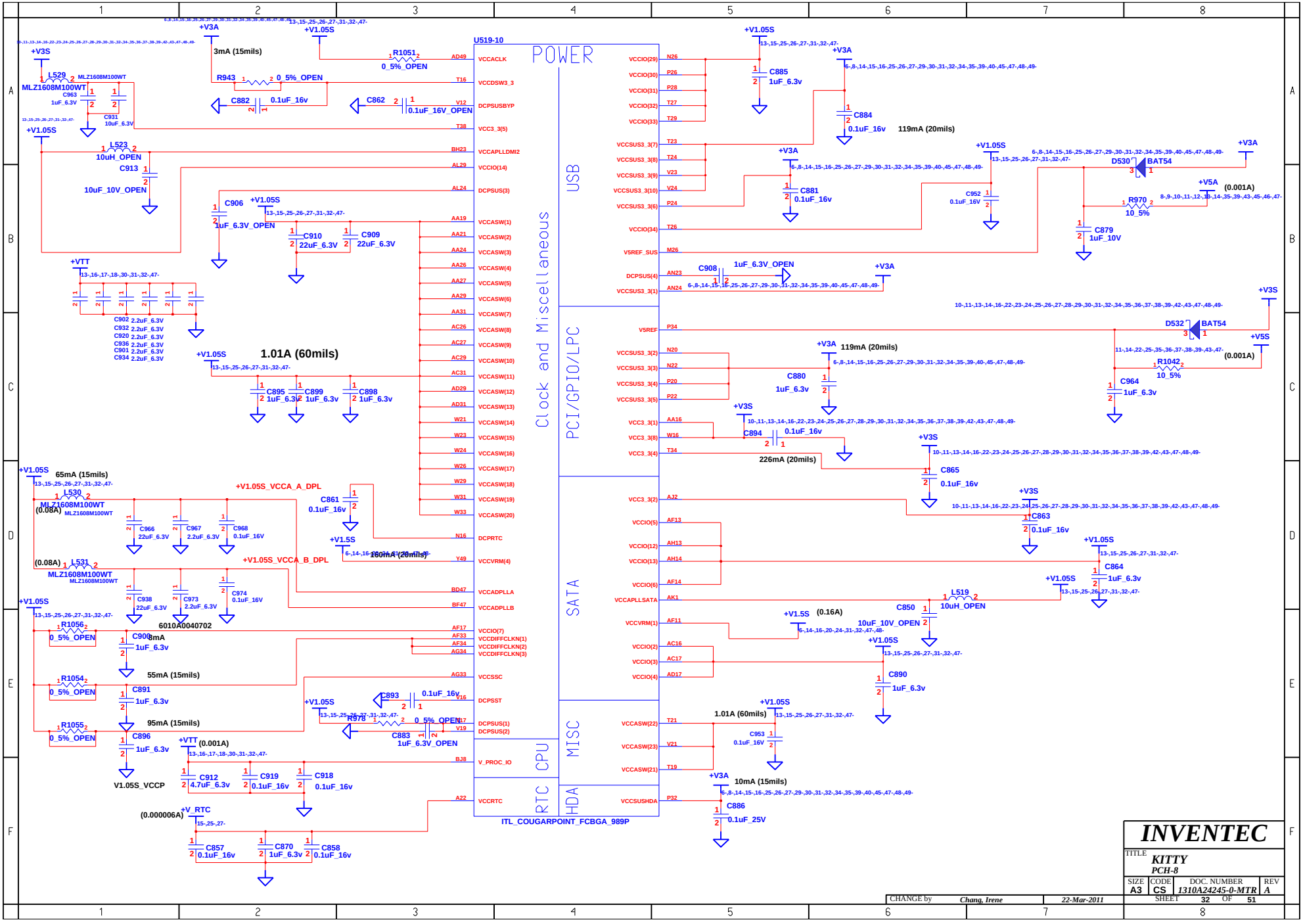
U519-10
POWER
Clock and Miscellaneous
USB
PCI/GPIO/LPC
SATA
MISC
CPU
RTC
HDA
ITL_COUGARPOINT_FCBGA_989P
VCCACLK
VCCDSW3_3
DCPSUSBYP
VCC3_3(5)
VCCAPLLDMI2
VCCIO(14)
DCPSUS(3)
VCCASW(1)
VCCASW(2)
VCCASW(3)
VCCASW(4)
VCCASW(5)
VCCASW(6)
VCCASW(7)
VCCASW(8)
VCCASW(9)
VCCASW(10)
VCCASW(11)
VCCASW(12)
VCCASW(13)
VCCASW(14)
VCCASW(15)
VCCASW(16)
VCCASW(17)
VCCASW(18)
VCCASW(19)
VCCASW(20)
DCPRTC
VCCVRM(4)
VCCADPLLA
VCCADPLLB
VCCIO(7)
VCCDIFFCLKN(1)
VCCDIFFCLKN(2)
VCCDIFFCLKN(3)
VCCSSC
DCPSST
DCPSUS(1)
DCPSUS(2)
V_PROC_IO
VCCRTC
VCCIO(29)
VCCIO(30)
VCCIO(31)
VCCIO(32)
VCCIO(33)
VCCSUS3_3(7)
VCCSUS3_3(8)
VCCSUS3_3(9)
VCCSUS3_3(10)
VCCSUS3_3(6)
VCCIO(34)
V5REF_SUS
DCPSUS(4)
VCCSUS3_3(1)
V5REF
VCCSUS3_3(2)
VCCSUS3_3(3)
VCCSUS3_3(4)
VCCSUS3_3(5)
VCC3_3(1)
VCC3_3(8)
VCC3_3(4)
VCC3_3(2)
VCCIO(5)
VCCIO(12)
VCCIO(13)
VCCIO(6)
VCCAPLLSATA
VCCVRM(1)
VCCIO(2)
VCCIO(3)
VCCIO(4)
VCCASW(22)
VCCASW(23)
VCCASW(21)
VCCSUSHDA
+V3S
+V3A
+V1.05S
+V5A
+V5S
+VTT
+V1.5S
+V1.05S_VCCA_A_DPL
+V1.05S_VCCA_B_DPL
+V_RTC
V1.05S_VCCP
L529 MLZ1608M100WT
L523 10uH_OPEN
L530 MLZ1608M100WT
L531 MLZ1608M100WT
R1051 0_5%_OPEN
R943 0_5%_OPEN
R1056 0_5%_OPEN
R1054 0_5%_OPEN
R1055 0_5%_OPEN
R878 0_5%_OPEN
R970 10_5%
R1042 10_5%
D530 BAT54
D532 BAT54
C885 1uF_6.3v
C884 0.1uF_16v
C881 0.1uF_16v
C952 0.1uF_16V
C879 1uF_10V
C908 1uF_6.3V_OPEN
C880 1uF_6.3v
C964 1uF_6.3v
C894 0.1uF_16v
C865 0.1uF_16v
C863 0.1uF_16v
C864 1uF_6.3v
C850 10uF_10V_OPEN
L519 10uH_OPEN
C890 1uF_6.3v
C953 0.1uF_16V
C886 0.1uF_25V
C913 10uF_10V_OPEN
C906 1uF_6.3V_OPEN
C910 22uF_6.3V
C909 22uF_6.3V
C902 2.2uF_6.3V
C932 2.2uF_6.3V
C920 2.2uF_6.3V
C936 2.2uF_6.3V
C901 2.2uF_6.3V
C934 2.2uF_6.3V
C895 1uF_6.3v
C899 1uF_6.3v
C898 1uF_6.3v
C861 0.1uF_16v
C966 22uF_6.3V
C967 2.2uF_6.3V
C968 0.1uF_16V
C938 22uF_6.3V
C973 2.2uF_6.3V
C974 0.1uF_16V
C900 1uF_6.3v
C891 1uF_6.3v
C896 1uF_6.3v
C893 0.1uF_16v
C883 1uF_6.3V_OPEN
C912 4.7uF_6.3v
C919 0.1uF_16v
C918 0.1uF_16v
C857 0.1uF_16v
C870 1uF_6.3v
C858 0.1uF_16v
C882 0.1uF_16v
C862 0.1uF_16V_OPEN
3mA (15mils)
1.01A (60mils)
119mA (20mils)
(0.001A)
(0.08A)
65mA (15mils)
180mA (20mils)
6010A0040702
8mA
55mA (15mils)
95mA (15mils)
(0.001A)
(0.000006A)
226mA (20mils)
(0.16A)
10mA (15mils)
INVENTEC
TITLE
KITTY
PCH-8
SIZE A3
CODE CS
DOC. NUMBER 1310A24245-0-MTR
REV A
SHEET 32 OF 51
CHANGE by Chang, Irene
22-Mar-2011

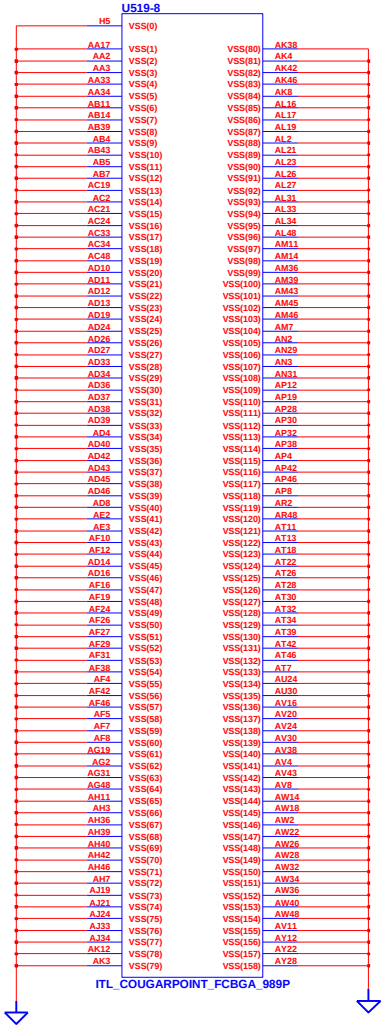

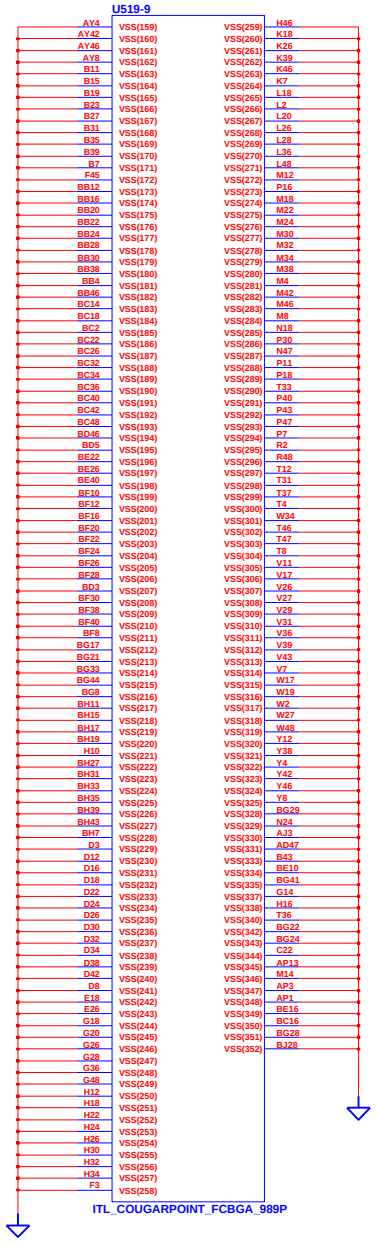

CHANGE by	Chang, Irene	22-Mar-2011	

INVENTEC

TITLE *KITTY PCH-9*

SIZE	CODE	DOC. NUMBER	REV
A3	CS	1310A24245-0-MTR	A

SHEET 33 OF 51

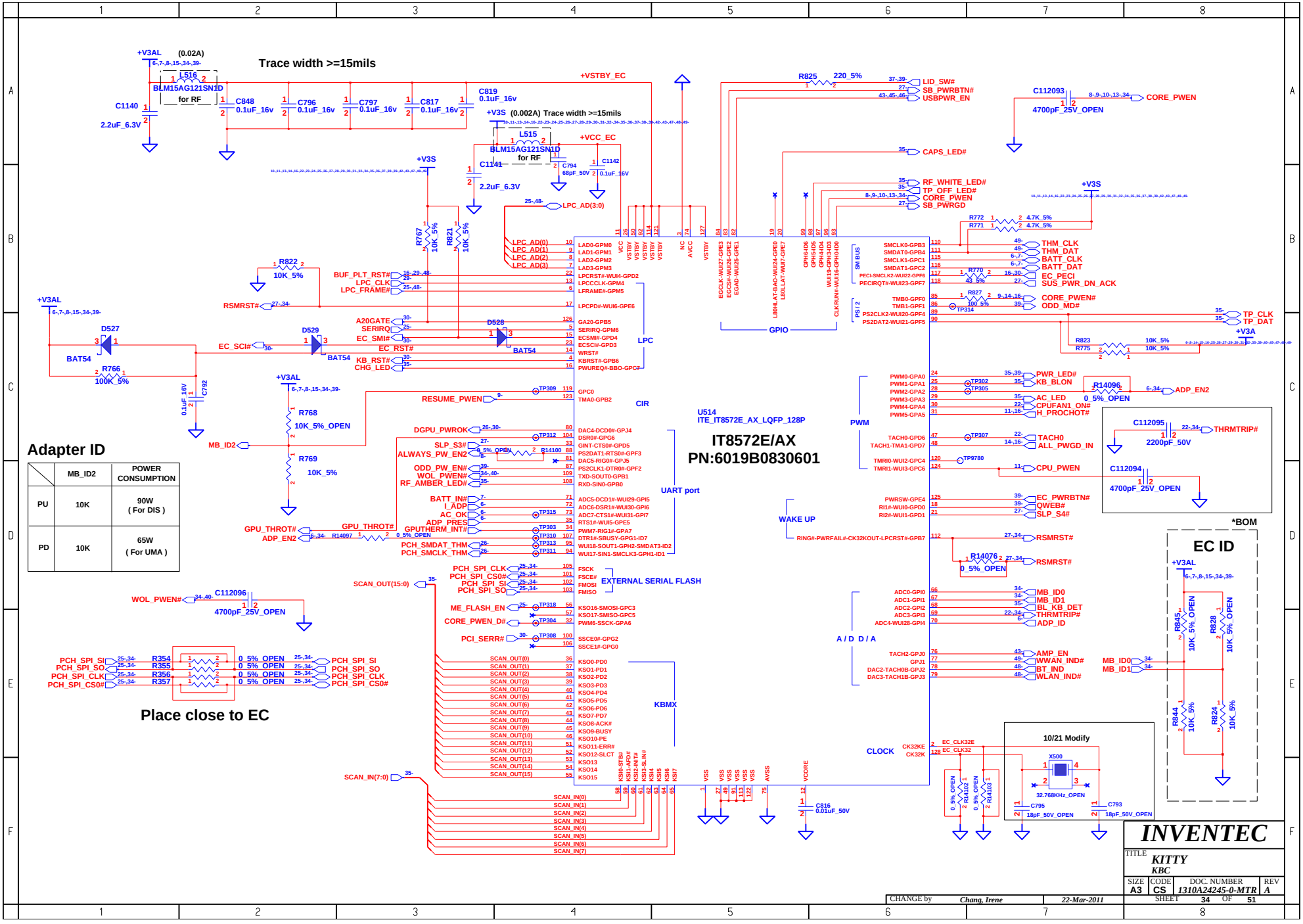
Trace width >=15mils
+V3AL (0.02A)
L516
BLM15AG121SN1D
for RF
C1140
2.2uF_6.3V
C848 0.1uF_16v
C796 0.1uF_16v
C797 0.1uF_16v
C817 0.1uF_16v
C819 0.1uF_16v
+V3S (0.002A) Trace width >=15mils
L515
BLM15AG121SN1D
for RF
C1141
2.2uF_6.3V
C794 68pF_50V
C1142 0.1uF_16V
+VSTBY_EC
+VCC_EC
+V3S
LPC_AD(3:0)
R767 10K_5%
R821 10K_5%
R822 10K_5%
BUF_PLT_RST#
LPC_CLK
LPC_FRAME#
RSMRST#
A20GATE
SERIRQ
EC_SMI#
EC_RST#
KB_RST#
CHG_LED
EC_SCI#
D527
D529
D528
BAT54
R766 100K_5%
C792 0.1uF_16V
R768 10K_5_OPEN
R769 10K_5%
MB_ID2
RESUME_PWEN
DGPU_PWROK
SLP_S3#
ALWAYS_PW_EN2
ODD_PW_EN#
WOL_PWEN#
RF_AMBER_LED#
BATT_IN#
I_ADP
AC_OK
ADP_PRES
GPUTHERM_INT#
GPU_THROT#
ADP_EN2
R14100 0_5%_OPEN
R14097 0_5%_OPEN
PCH_SMDAT_THM
PCH_SMCLK_THM
PCH_SPI_CLK
PCH_SPI_CS0#
PCH_SPI_SI
PCH_SPI_SO
SCAN_OUT(15:0)
ME_FLASH_EN
CORE_PWEN_D#
PCI_SERR#
SCAN_IN(7:0)
C112096 4700pF_25V_OPEN
WOL_PWEN#
R354 0_5%_OPEN
R355 0_5%_OPEN
R356 0_5%_OPEN
R357 0_5%_OPEN
Place close to EC
Adapter ID
MB_ID2
POWER CONSUMPTION
PU 10K 90W (For DIS)
PD 10K 65W (For UMA)
LPC
CIR
UART port
EXTERNAL SERIAL FLASH
KBMX
GPIO
PWM
WAKE UP
A / D D / A
CLOCK
U514
ITE_IT8572E_AX_LQFP_128P
IT8572E/AX
PN:6019B0830601
R825 220_5%
LID_SW#
SB_PWRBTN#
USBPWR_EN
CAPS_LED#
RF_WHITE_LED#
TP_OFF_LED#
CORE_PWEN
SB_PWRGD
C112093 4700pF_25V_OPEN
CORE_PWEN
R772 4.7K_5%
R771 4.7K_5%
THM_CLK
THM_DAT
BATT_CLK
BATT_DAT
EC_PECI
SUS_PWR_DN_ACK
R770 43_5%
R827 100_5%
CORE_PWEN#
ODD_MD#
TP314
TP_CLK
TP_DAT
R823 10K_5%
R775 10K_5%
PWR_LED#
KB_BLON
R14096 0_5%_OPEN
ADP_EN2
AC_LED
CPUFAN1_ON#
H_PROCHOT#
C112095 2200pF_50V
THRMTRIP#
C112094 4700pF_25V_OPEN
TACH0
ALL_PWGD_IN
CPU_PWEN
EC_PWRBTN#
QWEB#
SLP_S4#
RSMRST#
R14076 0_5%_OPEN
MB_ID0
MB_ID1
BL_KB_DET
THRMTRIP#
ADP_ID
AMP_EN
WWAN_IND#
BT_IND
WLAN_IND#
EC_CLK32E
EC_CLK32
R14102 0_5%_OPEN
R14103 0_5%_OPEN
10/21 Modify
X500
32.768KHz_OPEN
C795 18pF_50V_OPEN
C793 18pF_50V_OPEN
C816 0.01uF_50V
*BOM
EC ID
+V3AL
R845 10K_5%_OPEN
R828 10K_5%_OPEN
R844 10K_5%
R824 10K_5%
INVENTEC
TITLE KITTY KBC
SIZE A3
CODE CS
DOC. NUMBER 1310A24245-0-MTR
REV A
SHEET 34 OF 51
CHANGE by Chang, Irene
22-Mar-2011

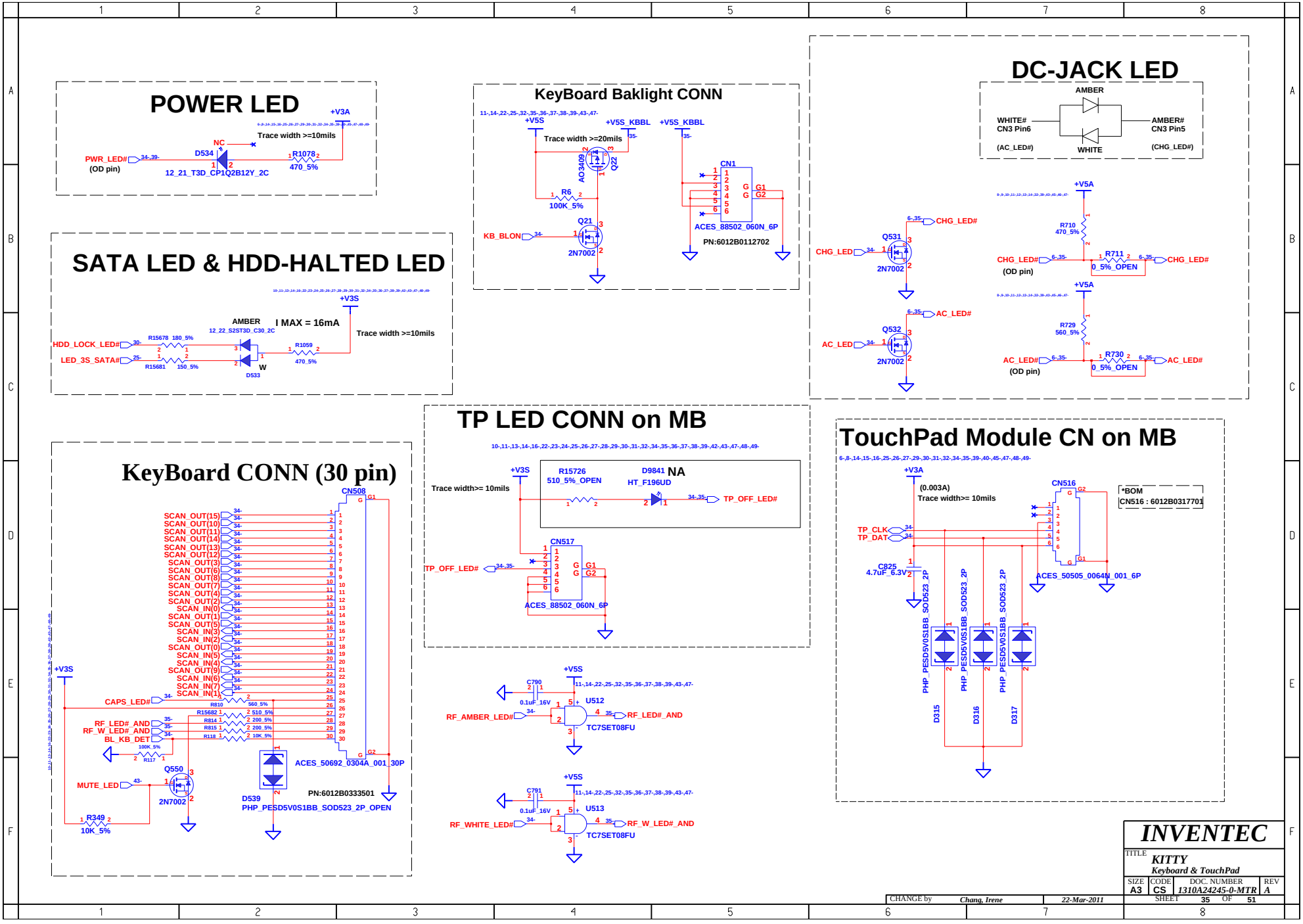
POWER LED
+V3A
Trace width >=10mils
NC
D534
PWR_LED#
(OD pin)
12_21_T3D_CP1Q2B12Y_2C
R1078
470_5%
KeyBoard Baklight CONN
+V5S
Trace width >=20mils
+V5S_KBBL
AO3409
Q22
R6
100K_5%
Q21
KB_BLON
2N7002
CN1
ACES_88502_060N_6P
PN:6012B0112702
DC-JACK LED
AMBER
WHITE# CN3 Pin6
AMBER# CN3 Pin5
(AC_LED#)
WHITE
(CHG_LED#)
+V5A
R710 470_5%
CHG_LED#
Q531
CHG_LED
2N7002
R711 0_5%_OPEN
(OD pin)
R729 560_5%
AC_LED#
Q532
AC_LED
R730 0_5%_OPEN
SATA LED & HDD-HALTED LED
+V3S
AMBER
I MAX = 16mA
12_22_S2ST3D_C30_2C
Trace width >=10mils
HDD_LOCK_LED#
LED_3S_SATA#
R15678 180_5%
R15681 150_5%
R1059 470_5%
W
D533
TP LED CONN on MB
+V3S
Trace width>= 10mils
R15726 510_5%_OPEN
D9841 NA
HT_F196UD
TP_OFF_LED#
CN517
ACES_88502_060N_6P
TouchPad Module CN on MB
+V3A
(0.003A)
Trace width>= 10mils
CN516
*BOM
CN516 : 6012B0317701
TP_CLK
TP_DAT
C825 4.7uF_6.3V
ACES_50505_0064N_001_6P
PHP_PESD5V0S1BB_SOD523_2P
D315
D316
D317
KeyBoard CONN (30 pin)
CN508
SCAN_OUT(15)
SCAN_OUT(10)
SCAN_OUT(11)
SCAN_OUT(14)
SCAN_OUT(13)
SCAN_OUT(12)
SCAN_OUT(3)
SCAN_OUT(6)
SCAN_OUT(8)
SCAN_OUT(7)
SCAN_OUT(4)
SCAN_OUT(2)
SCAN_IN(0)
SCAN_OUT(1)
SCAN_OUT(5)
SCAN_IN(3)
SCAN_IN(2)
SCAN_OUT(0)
SCAN_IN(5)
SCAN_IN(4)
SCAN_OUT(9)
SCAN_IN(6)
SCAN_IN(7)
SCAN_IN(1)
CAPS_LED#
R810 560_5%
R15682 510_5%
R814 200_5%
R815 200_5%
R118 10K_5%
RF_LED#_AND
RF_W_LED#_AND
BL_KB_DET
R117 100K_5%
Q550
MUTE_LED
2N7002
R349 10K_5%
D539
PHP_PESD5V0S1BB_SOD523_2P_OPEN
ACES_50692_0304A_001_30P
PN:6012B0333501
C790 0.1uF_16V
U512
RF_AMBER_LED#
TC7SET08FU
C791 0.1uF_16V
U513
RF_WHITE_LED#
INVENTEC
TITLE
KITTY
Keyboard & TouchPad
SIZE A3
CODE CS
DOC. NUMBER 1310A24245-0-MTR
REV A
SHEET 35 OF 51
CHANGE by Chang, Irene
22-Mar-2011

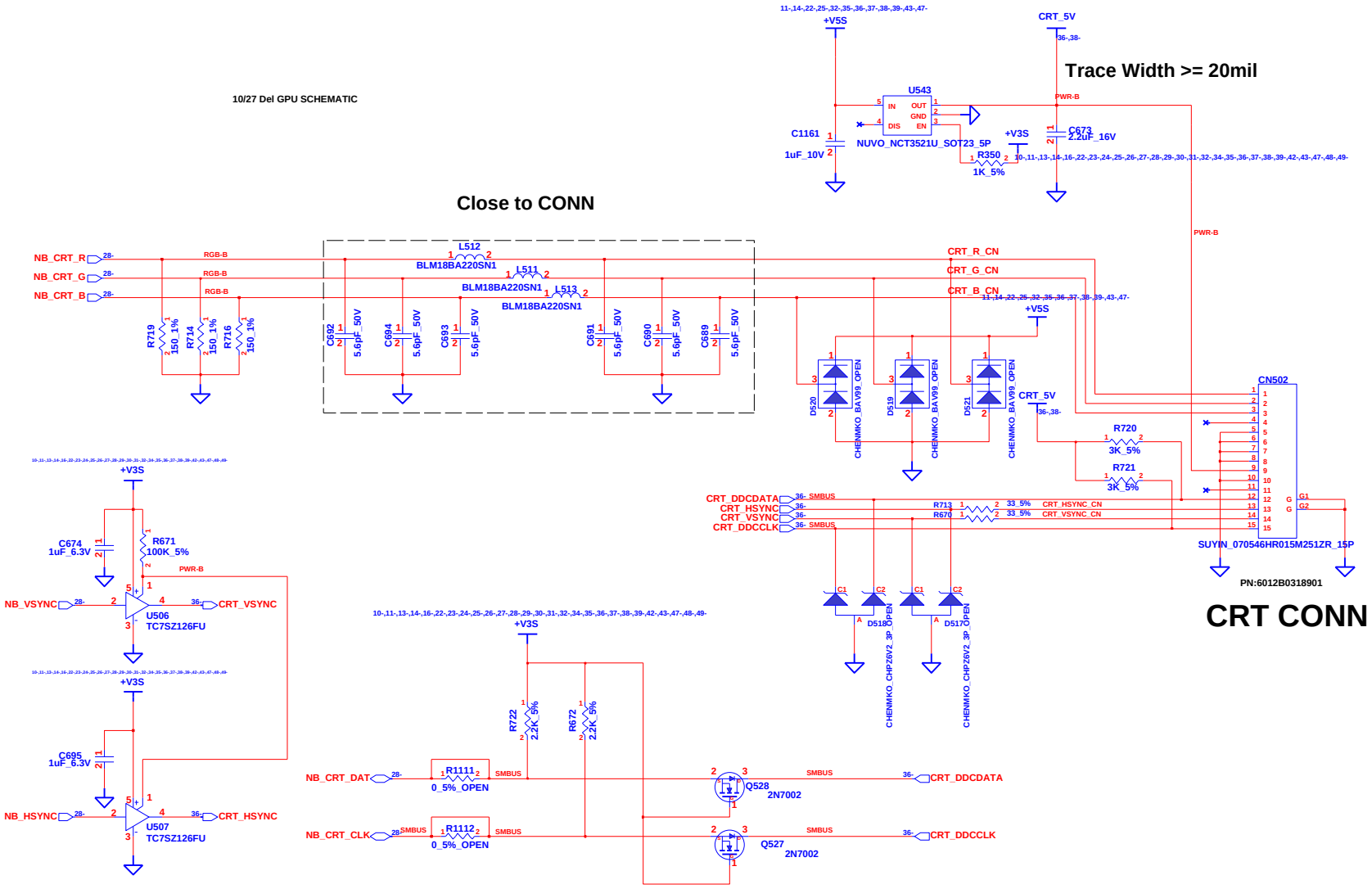

INVENTEC			
TITLE KITTY CRT			
SIZE A3	CODE CS	DOC. NUMBER 1310A24245-0-MTR	REV A
CHANGE by Chang, Irene	22-Mar-2011	SHEET 36 OF 51	

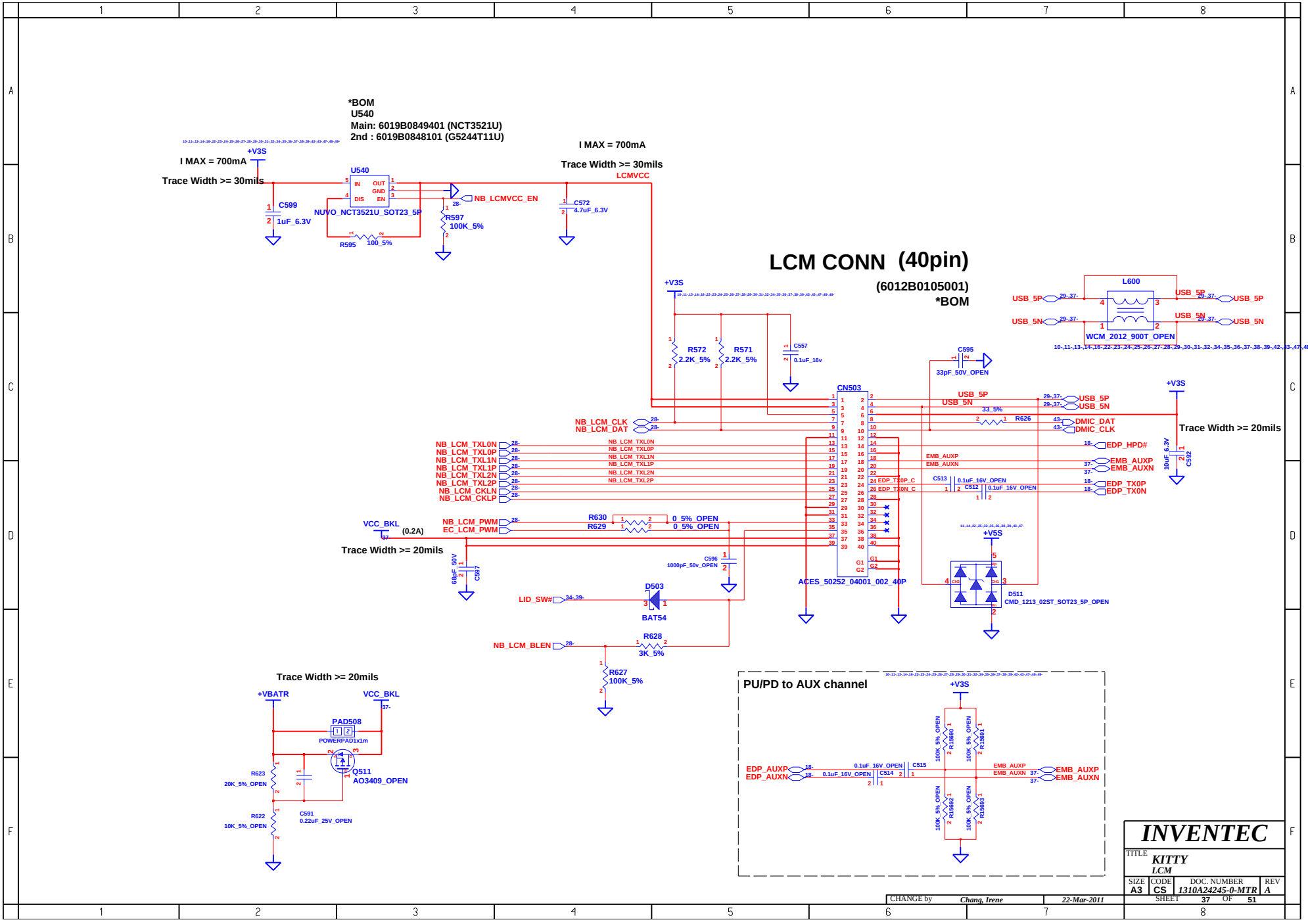
*BOM
U540
Main: 6019B0849401 (NCT3521U)
2nd : 6019B0848101 (G5244T11U)
+V3S
I MAX = 700mA
Trace Width >= 30mils
U540
IN
OUT
GND
DIS
EN
NUVO_NCT3521U_SOT23_5P
C599
1uF_6.3V
R595
100_5%
NB_LCMVCC_EN
R597
100K_5%
I MAX = 700mA
Trace Width >= 30mils
LCMVCC
C572
4.7uF_6.3V
LCM CONN (40pin)
(6012B0105001)
*BOM
+V3S
R572
2.2K_5%
R571
2.2K_5%
C557
0.1uF_16v
L600
USB_5P
USB_5N
WCM_2012_900T_OPEN
C595
33pF_50V_OPEN
CN503
NB_LCM_CLK
NB_LCM_DAT
NB_LCM_TXL0N
NB_LCM_TXL0P
NB_LCM_TXL1N
NB_LCM_TXL1P
NB_LCM_TXL2N
NB_LCM_TXL2P
NB_LCM_CKLN
NB_LCM_CKLP
NB_LCM_PWM
EC_LCM_PWM
R630
R629
0_5%_OPEN
0_5%_OPEN
VCC_BKL
(0.2A)
Trace Width >= 20mils
68pF_50V
C597
C596
1000pF_50v_OPEN
D503
BAT54
LID_SW#
NB_LCM_BLEN
R628
3K_5%
R627
100K_5%
ACES_50252_04001_002_40P
33_5%
R626
DMIC_DAT
DMIC_CLK
EDP_HPD#
EMB_AUXP
EMB_AUXN
EDP_TX0P
EDP_TX0N
EDP_TX0P_C
EDP_TX0N_C
C513
C512
0.1uF_16V_OPEN
+V3S
Trace Width >= 20mils
10uF_6.3V
C592
+V5S
D511
CMD_1213_02ST_SOT23_5P_OPEN
Trace Width >= 20mils
+VBATR
VCC_BKL
PAD508
POWERPAD1x1m
Q511
AO3409_OPEN
R623
20K_5%_OPEN
R622
10K_5%_OPEN
C591
0.22uF_25V_OPEN
PU/PD to AUX channel
+V3S
EDP_AUXP
EDP_AUXN
0.1uF_16V_OPEN
C514
C515
EMB_AUXP
EMB_AUXN
100K_5%_OPEN
R15690
R15691
R15692
R15693
INVENTEC
TITLE
KITTY
LCM
SIZE A3
CODE CS
DOC. NUMBER 1310A24245-0-MTR
REV A
SHEET 37 OF 51
CHANGE by Chang, Irene
22-Mar-2011

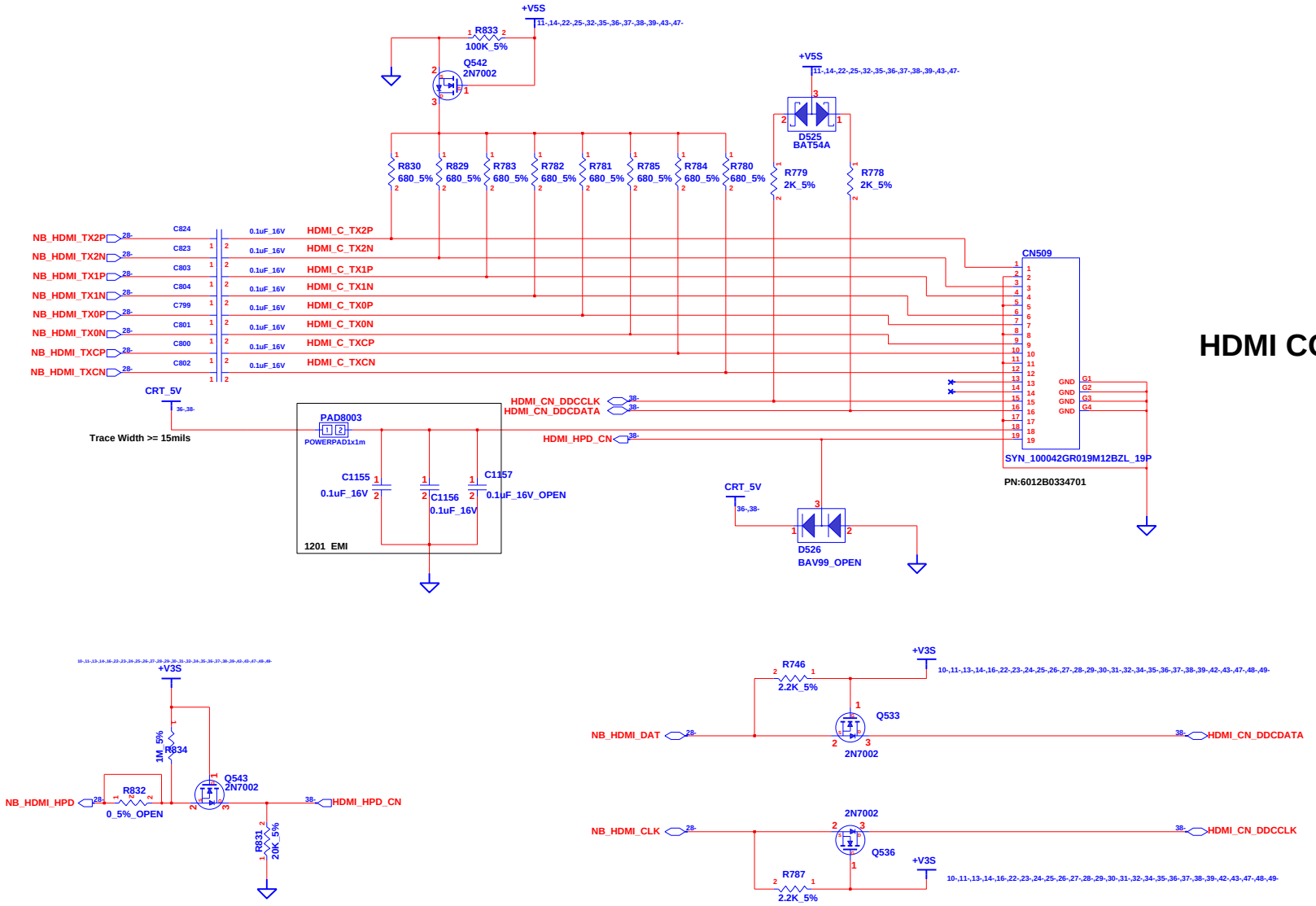

INVENTEC			
TITLE: KITTY HDMI Level-Shift			
SIZE: A3	CODE: CS	DOC. NUMBER: 1310A24245-0-MTR	REV: A
CHANGE by: Chang, Irene	22-Mar-2011	SHEET 38 OF 51	

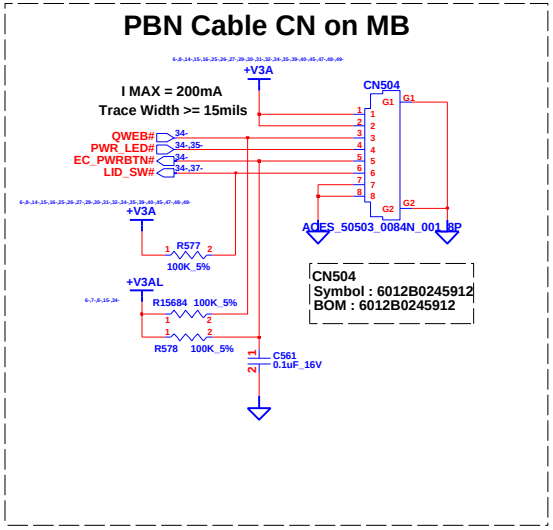

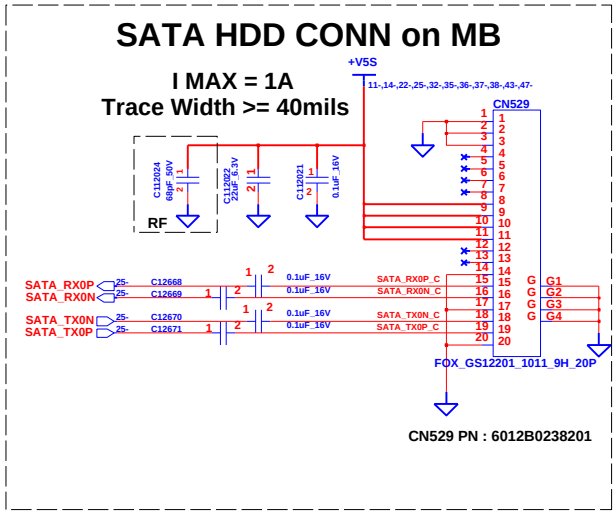

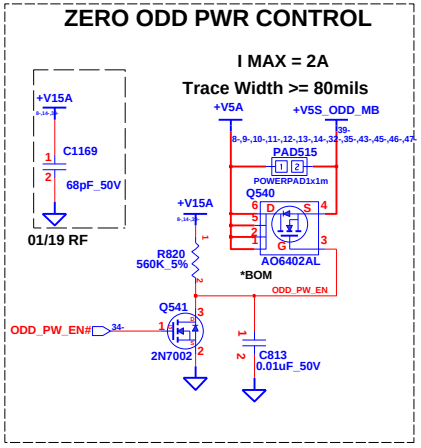

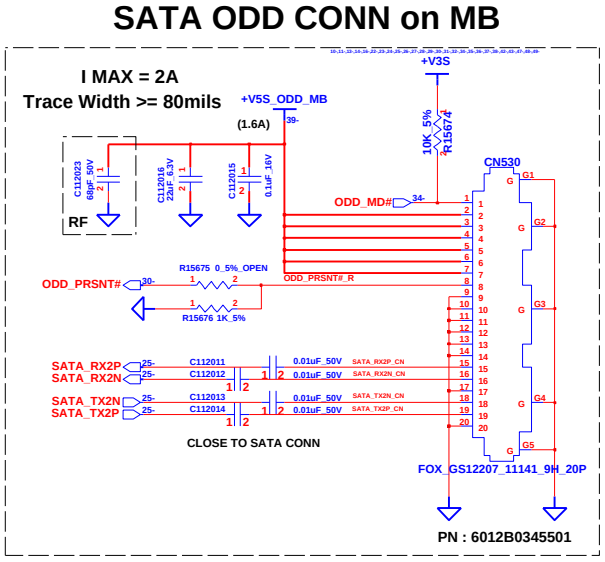

INVENTEC			
TITLE KITTY SATA HDD & ODD			
SIZE A3	CODE CS	DOC. NUMBER 1310A24245-0-MTR	REV A
CHANGE by Chang, Irene	22-Mar-2011	SHEET 39 OF 51	

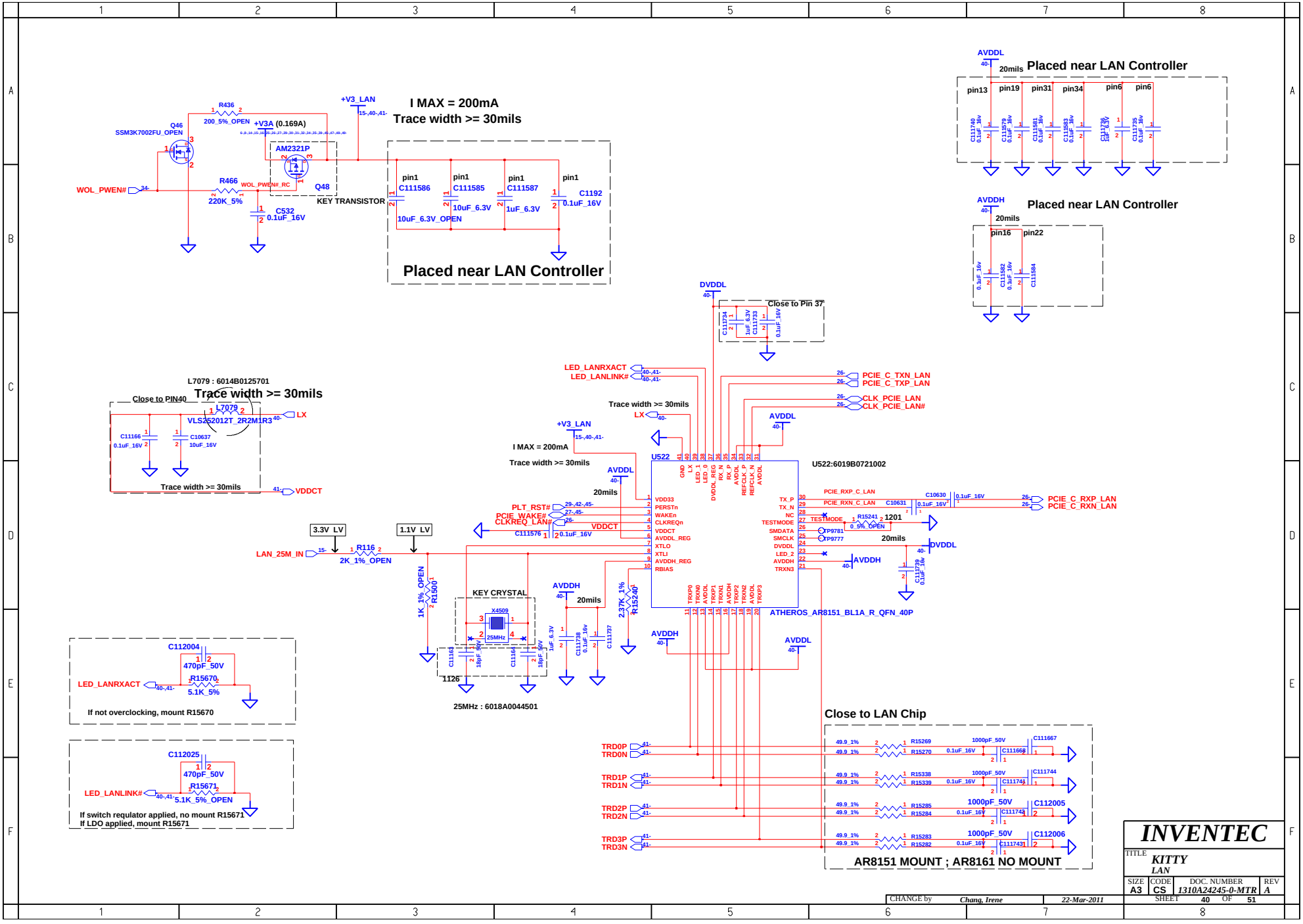
I MAX = 200mA
Trace width >= 30mils
+V3_LAN
15-,40-,41-
R436
200_5%_OPEN
+V3A (0.169A)
Q46
SSM3K7002FU_OPEN
AM2321P
Q48
KEY TRANSISTOR
WOL_PWEN#
R466
220K_5%
WOL_PWEN#_RC
C532
0.1uF_16V
C111586
10uF_6.3V_OPEN
C111585
10uF_6.3V
C111587
1uF_6.3V
C1192
0.1uF_16V
Placed near LAN Controller
AVDDL
20mils
Placed near LAN Controller
pin13
pin19
pin31
pin34
pin6
pin6
AVDDH
Placed near LAN Controller
pin16
pin22
DVDDL
Close to Pin 37
LED_LANRXACT
LED_LANLINK#
PCIE_C_TXN_LAN
PCIE_C_TXP_LAN
CLK_PCIE_LAN
CLK_PCIE_LAN#
L7079 : 6014B0125701
Trace width >= 30mils
Close to PIN40
L7079
VLS252012T_2R2M1R3
LX
C11166
0.1uF_16V
C10637
10uF_16V
Trace width >= 30mils
VDDCT
U522
U522:6019B0721002
PLT_RST#
PCIE_WAKE#
CLKREQ_LAN#
3.3V_LV
1.1V_LV
LAN_25M_IN
R116
2K_1%_OPEN
1K_1%_OPEN
R1501
KEY CRYSTAL
X4509
25MHz
1126
25MHz : 6018A0044501
2.37K_1%
R15240
ATHEROS_AR8151_BL1A_R_QFN_40P
PCIE_RXP_C_LAN
PCIE_RXN_C_LAN
PCIE_C_RXP_LAN
PCIE_C_RXN_LAN
TESTMODE
R15241
0_5%_OPEN
1201
C112004
470pF_50V
R15670
5.1K_5%
If not overclocking, mount R15670
C112025
470pF_50V
R15671
5.1K_5%_OPEN
If switch requlator applied, no mount R15671
If LDO applied, mount R15671
Close to LAN Chip
TRD0P
TRD0N
TRD1P
TRD1N
TRD2P
TRD2N
TRD3P
TRD3N
R15269
R15270
R15338
R15339
R15285
R15284
R15283
R15282
C111667
C111744
C112005
C112006
AR8151 MOUNT ; AR8161 NO MOUNT
INVENTEC
TITLE
KITTY
LAN
SIZE A3
CODE CS
DOC. NUMBER 1310A24245-0-MTR
REV A
SHEET 40 OF 51
CHANGE by Chang, Irene
22-Mar-2011

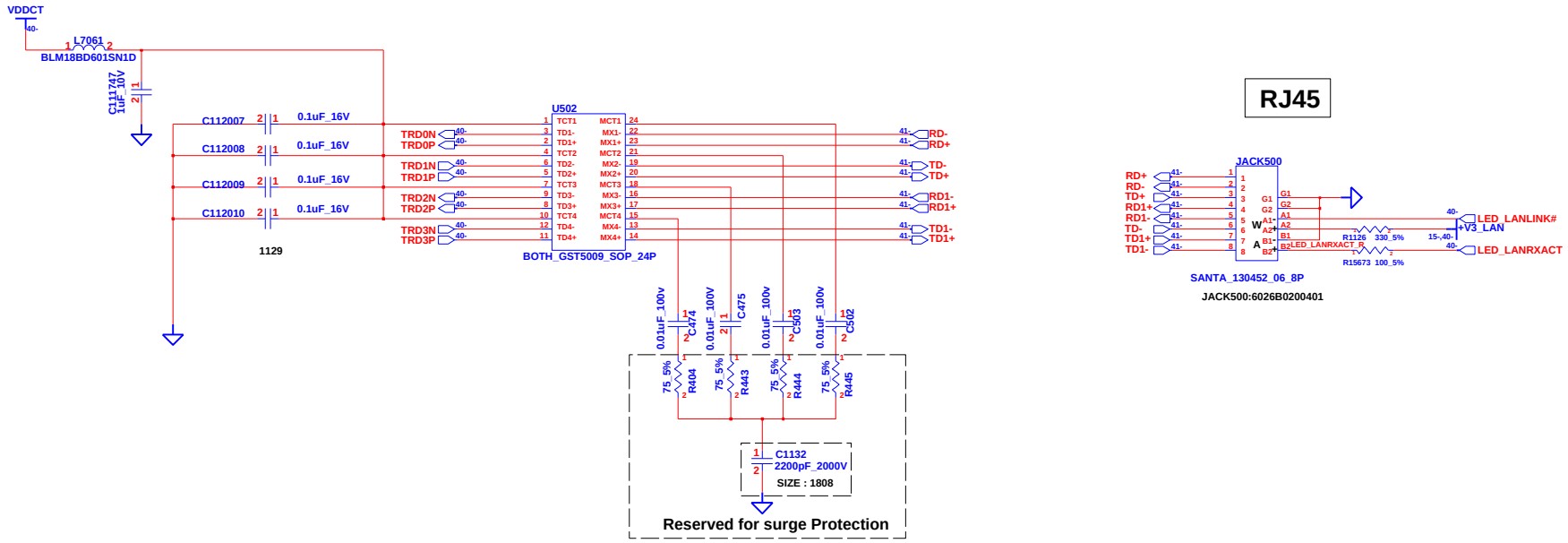

LAYOUT NOTE : Place termination resistors and caps as close to LAN controller as possible

CHANGE by	Chang, Irene	22-Mar-2011	

INVENTEC

TITLE *KITTY*
RJ-45

SIZE	CODE	DOC. NUMBER	REV
A3	CS	1310A24245-0-MTR	A

SHEET 41 OF 51

Layout Note :

C1051 CLOSE TO PIN5 (Trace width/length : 11mils/<100mils)
C715 Close to C1051 (Trace width/length : 20mils/<40mils)
C714 close to pin10 (Trace width/length : 11mils/<100mils)
APREXT trace width/length : 12mils/<250mils
C1057 close to pin18 (Trace width/length : 12mils/<100mils for internal REG)

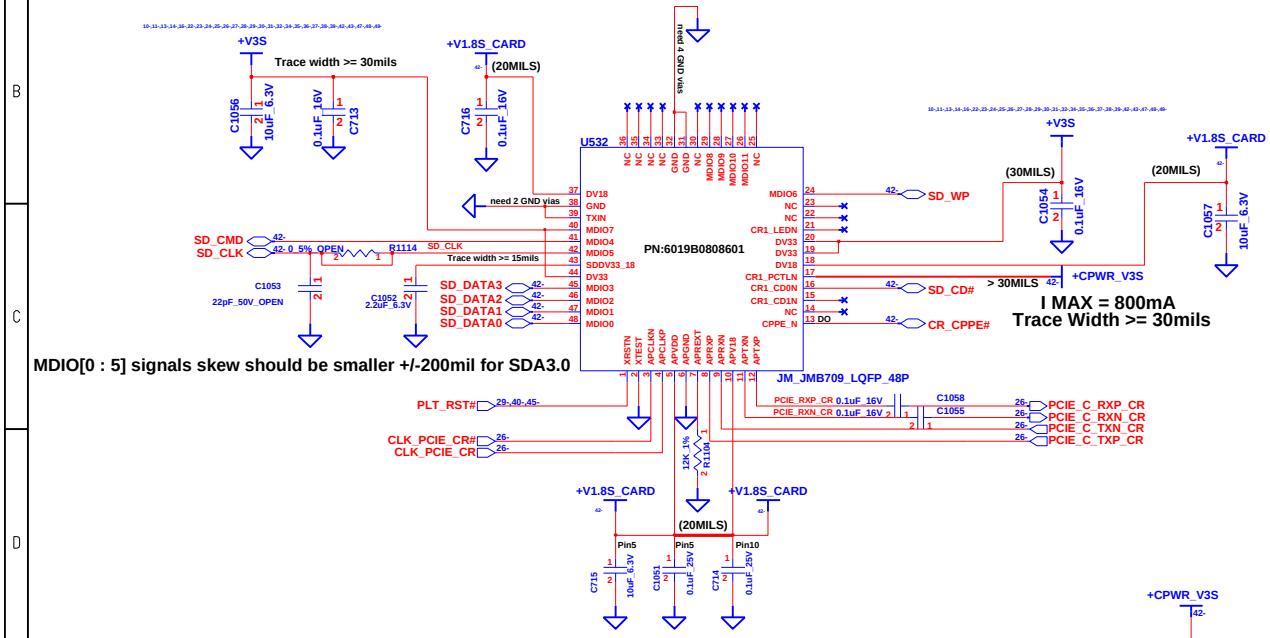

Card Reader CONN

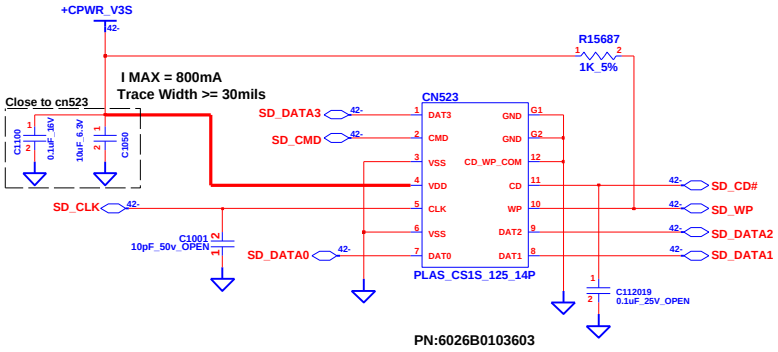

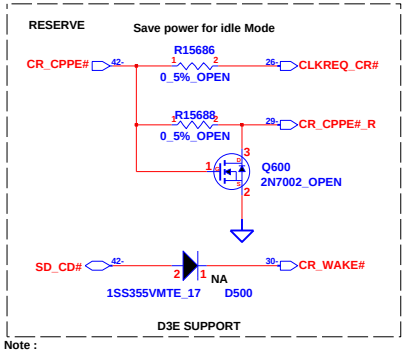

Note :

1. Add Q600 & R15688 NA, if JMB709 power domain is different with SB.
2. NA Q600 & mount R15688, if JMB709 power domain is same with SB.

CHANGE by	Chang, Irene	22-Mar-2011	

INVENTEC

TITLE *KITTY* *Card Reader*

SIZE	CODE	DOC. NUMBER	REV
A3	CS	1310A24245-0-MTR	A

SHEET 42 OF 51

*BOM 6019B0825801

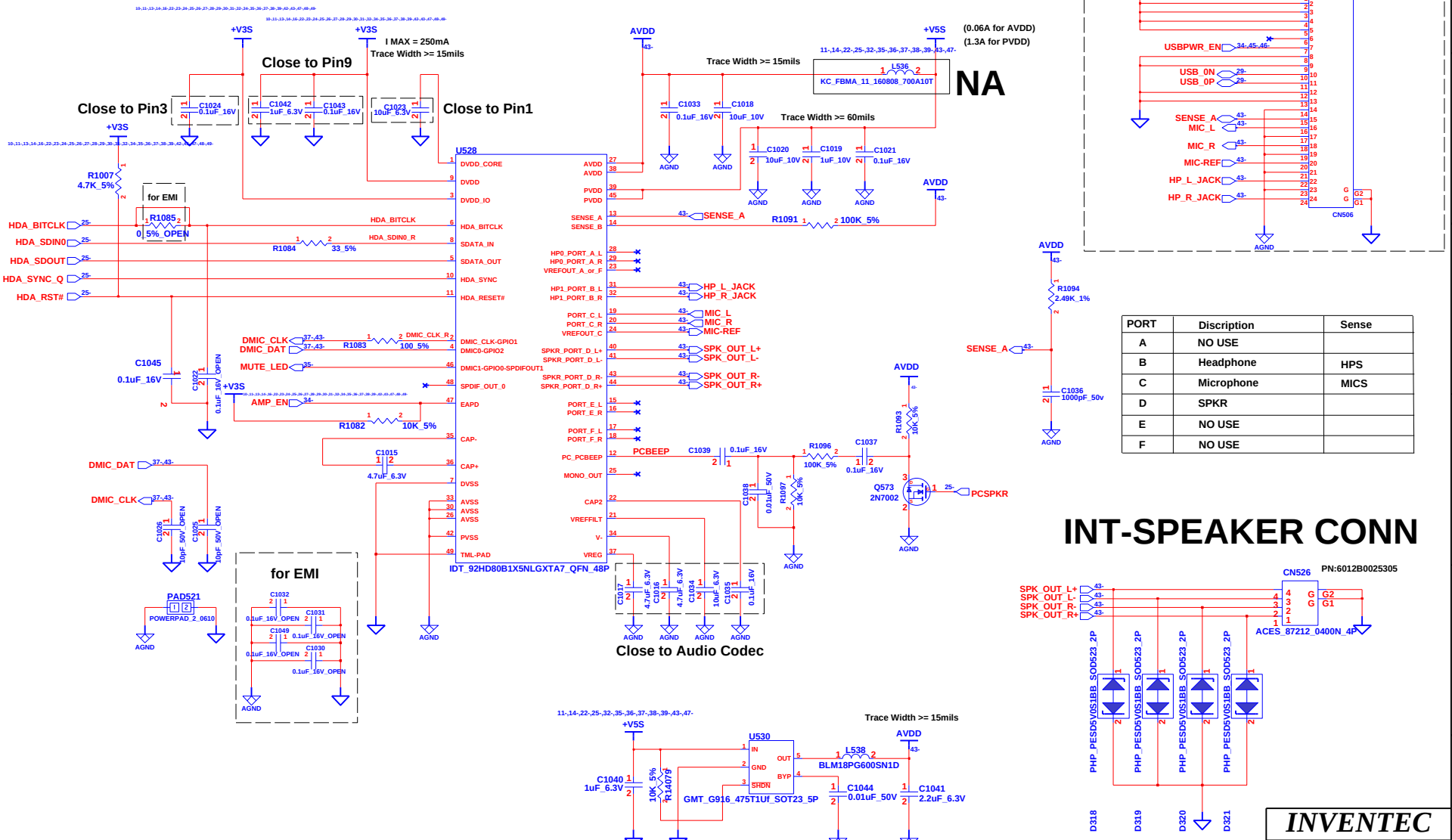

PORT	Discription	Sense
A	NO USE	
B	Headphone	HPS
C	Microphone	MICS
D	SPKR	
E	NO USE	
F	NO USE	

INVENTEC

TITLE: KITTY
Audio Codec

SIZE	CODE	DOC. NUMBER	REV
A3	CS	1310A24245-0-MTR	A

SHEET 43 OF 51

CHANGE by Chang, Irene 22-Mar-2011

1	2	3	4	5	6	7	8

A B C D E F

CHANGE by *Chang, Irene* *22-Mar-2011*

INVENTEC

TITLE
KITTY
HP JACK & MIC JACK

SIZE	CODE	DOC. NUMBER	REV
A3	CS	*1310A24245-0-MTR*	*A*

SHEET 44 OF 51

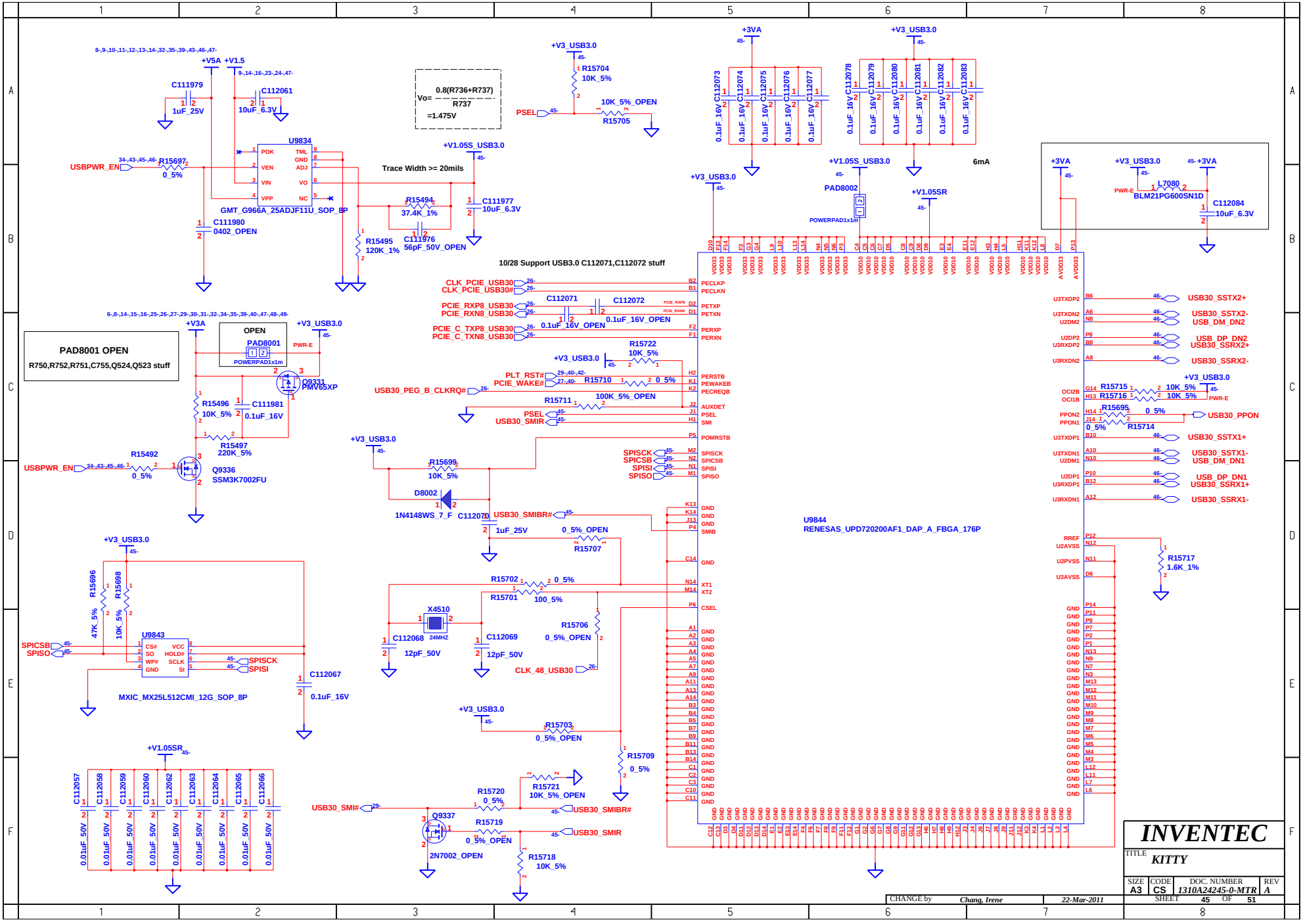
U9834
GMT_G966A_25ADJF11U_SOP_8P
Vo= 0.8(R736+R737) / R737 =1.475V
Trace Width >= 20mils
10/28 Support USB3.0 C112071,C112072 stuff
PAD8001 OPEN
R750,R752,R751,C755,Q524,Q523 stuff
U9844
RENESAS_UPD720200AF1_DAP_A_FBGA_176P
U9843
MXIC_MX25L512CMI_12G_SOP_8P
6mA
INVENTEC
TITLE KITTY
SIZE A3 CODE CS DOC. NUMBER 1310A24245-0-MTR REV A
SHEET 45 OF 51
CHANGE by Chang, Irene 22-Mar-2011

USB 3.0

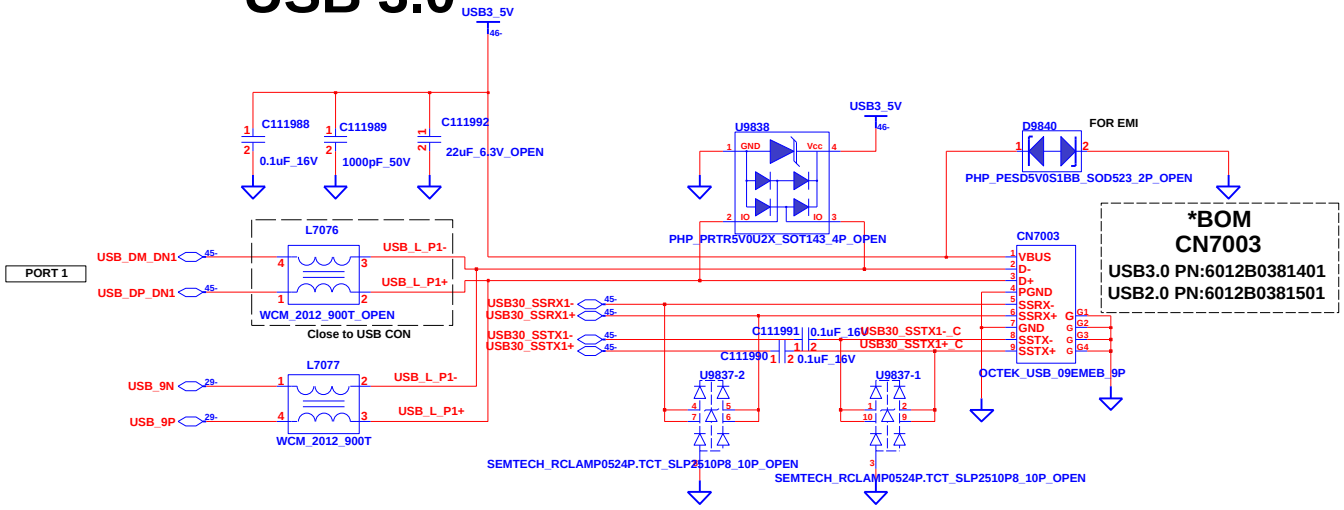

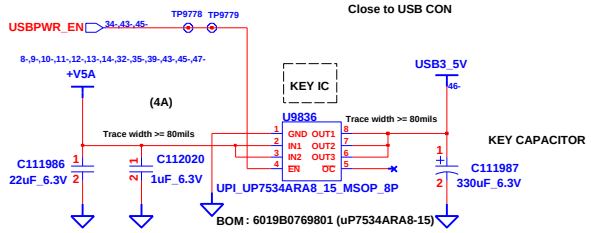

USB 3.0

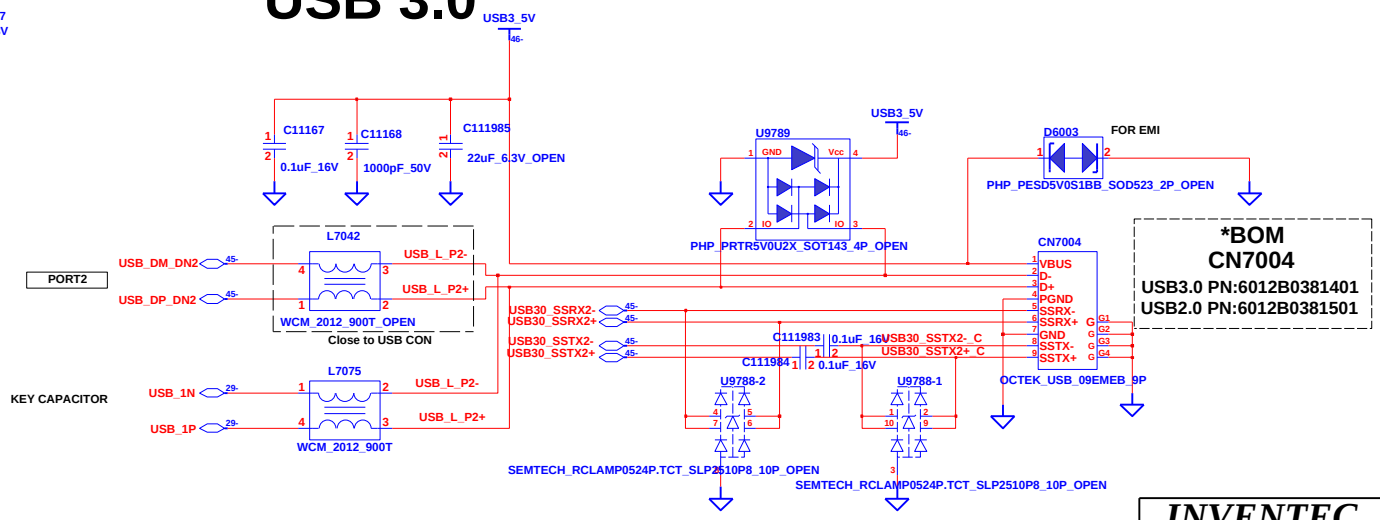

INVENTEC

TITLE KITTY

SIZE	CODE	DOC. NUMBER	REV
A3	CS	1310A24245-0-MTR	A

SHEET 46 OF 51

CHANGE by Chang, Irene 22-Mar-2011

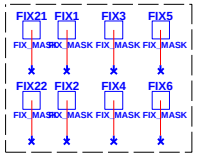

for MB

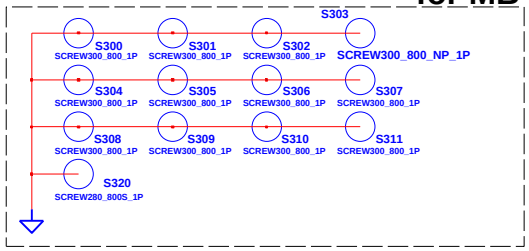

CPU's screws

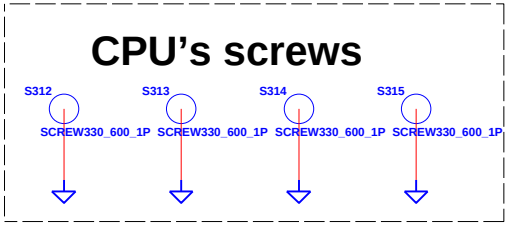

for PCH

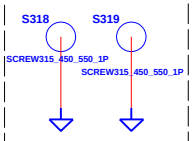

for THERMAL FAN

01/17

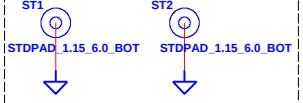

NUT P/N : 6052B0095601

*BOM

EMI

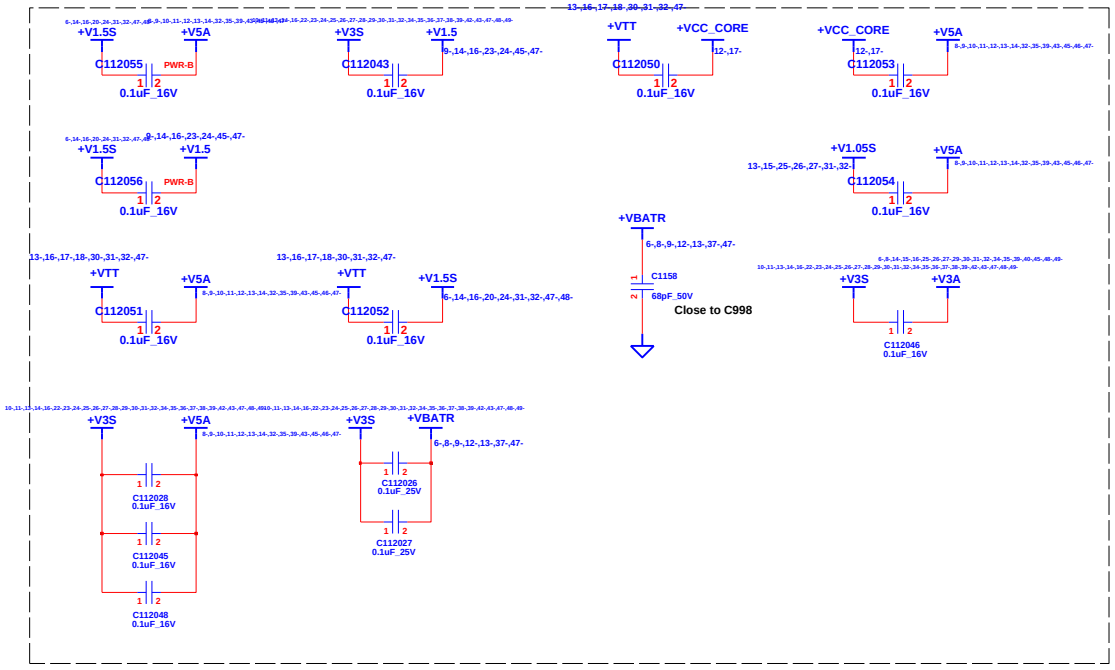

RF

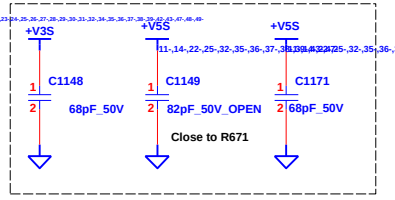

01/19 RF

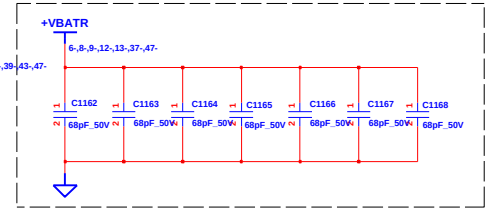

INVENTEC			
TITLE KITTY SCREW & CONN			
SIZE A3	CODE CS	DOC. NUMBER 1310A24245-0-MTR	REV A
CHANGE by Chang, Irene	22-Mar-2011	SHEET 47 OF 51	

WLAN CONN (MINICARD)

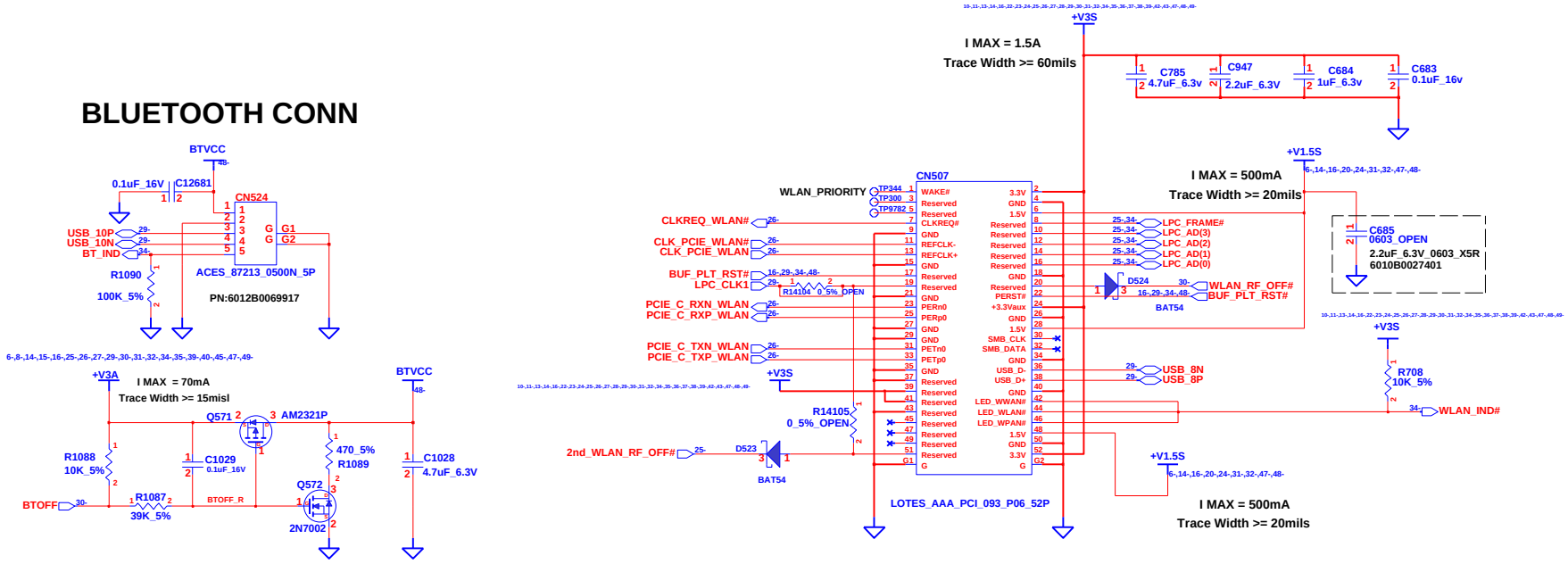

INVENTEC

TITLE
KITTY
WLAN, BT & WebCAM

SIZE	CODE	DOC. NUMBER	REV
A3	CS	1310A24245-0-MTR	A

SHEET 48 OF 51

CHANGE by Chang, Irene 22-Mar-2011

OPTION PART

WWAN

UMA WWAN stuff
Discrete WWAN NA

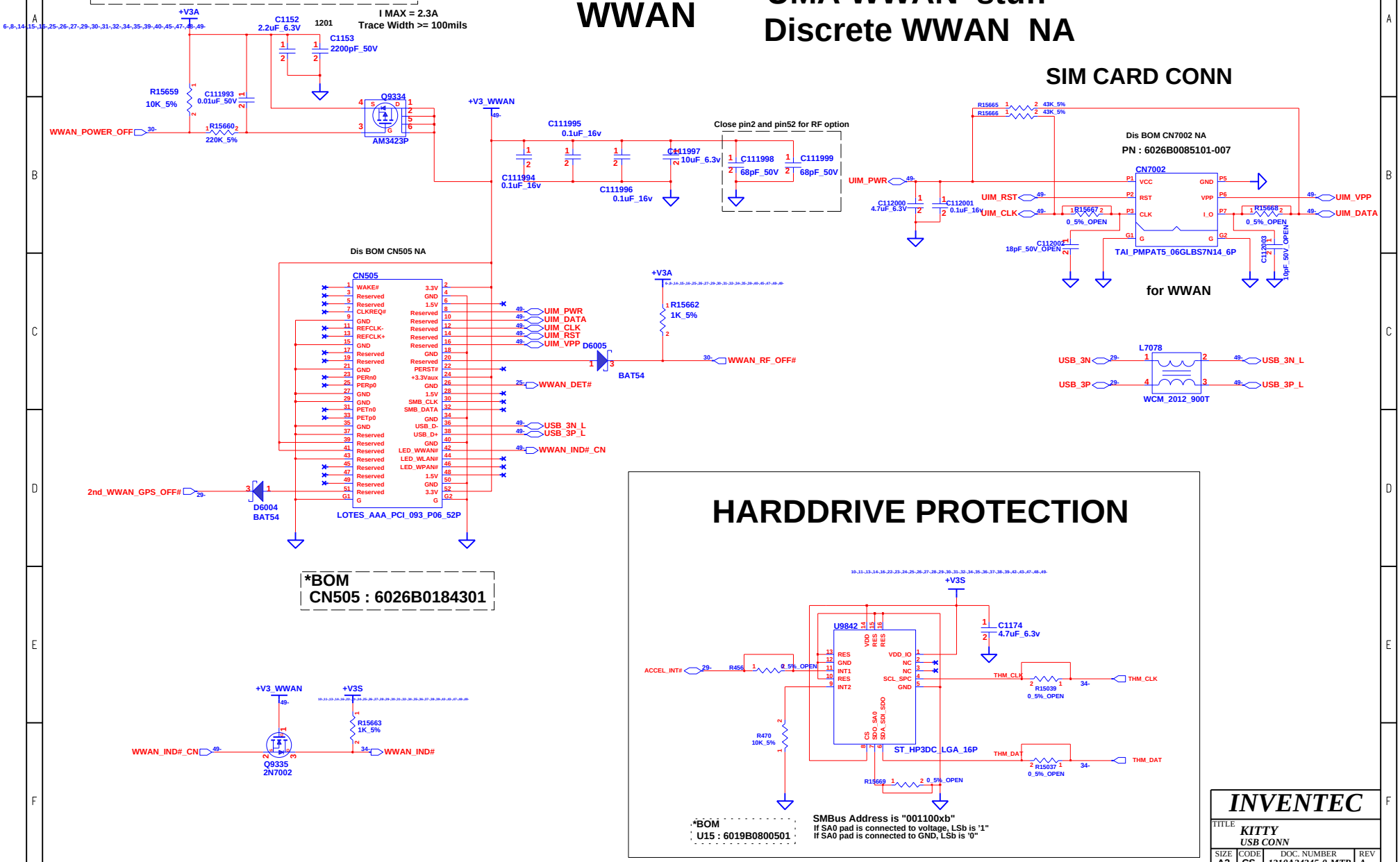

CHANGE by	Chang, Irene	22-Mar-2011	

INVENTEC

TITLE: KITTY USB CONN

SIZE	CODE	DOC. NUMBER	REV
A3	CS	1310A24245-0-MTR	A

SHEET 49 OF 51

USB + AUDIO BOARD

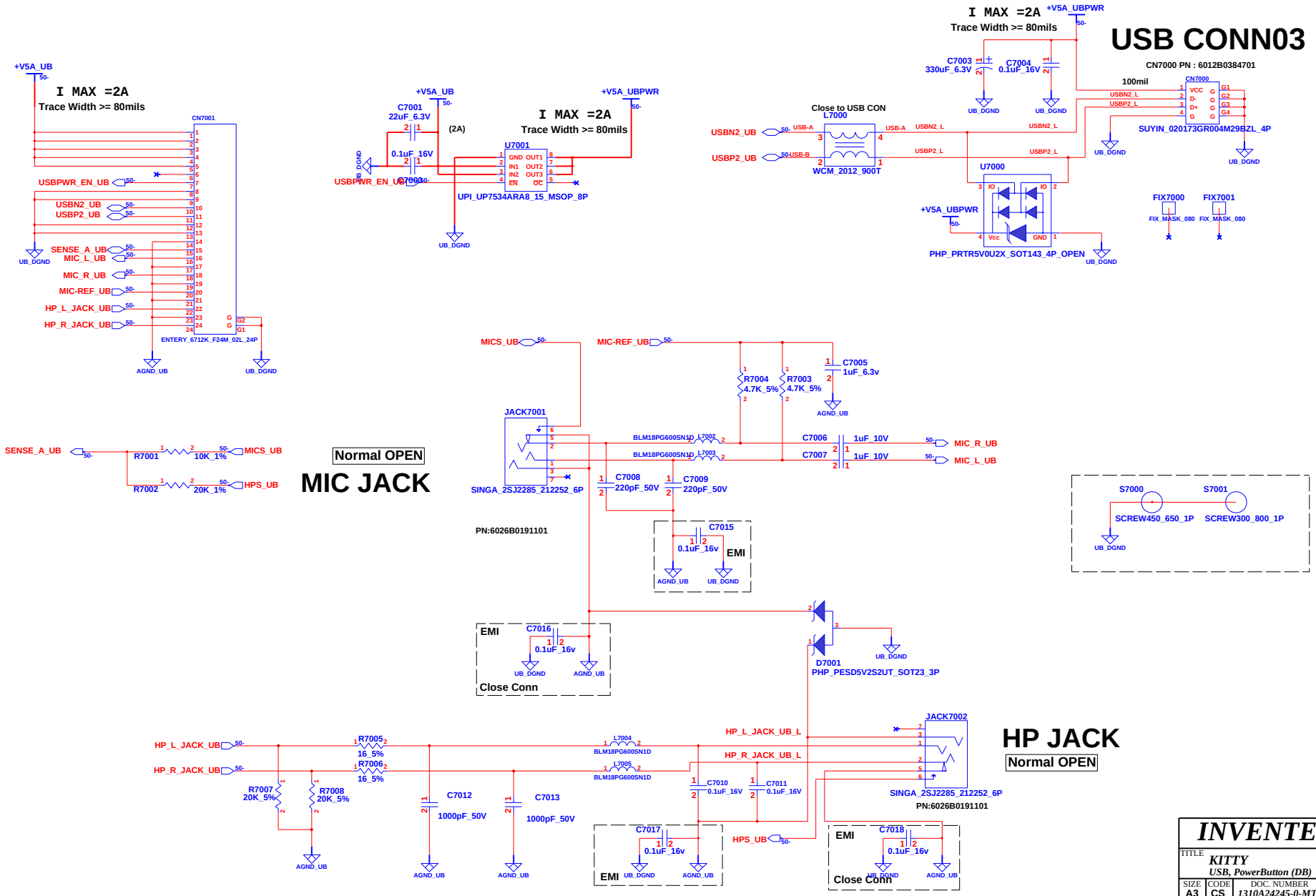

INVENTEC			
TITLE: KITTY USB, PowerButton (DB)			
SIZE: A3	CODE: CS	DOC. NUMBER: 1310A24245-0-MTR	REV: A
CHANGE by: Chang, Irene	22-Mar-2011	SHEET 50 OF 51	

POWER BOTTON BOARD

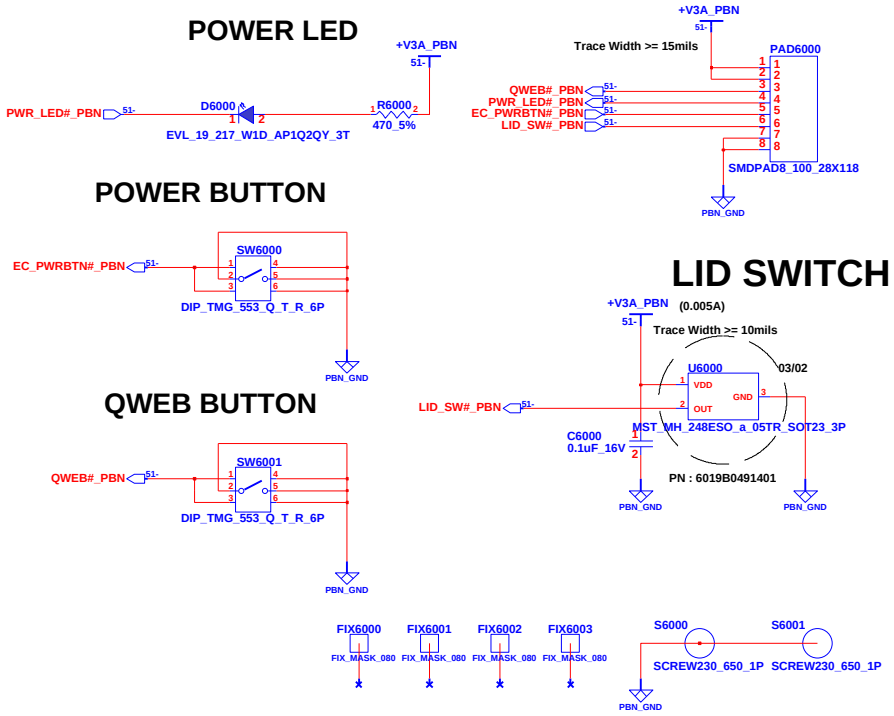

PICK BUTTON BOARD

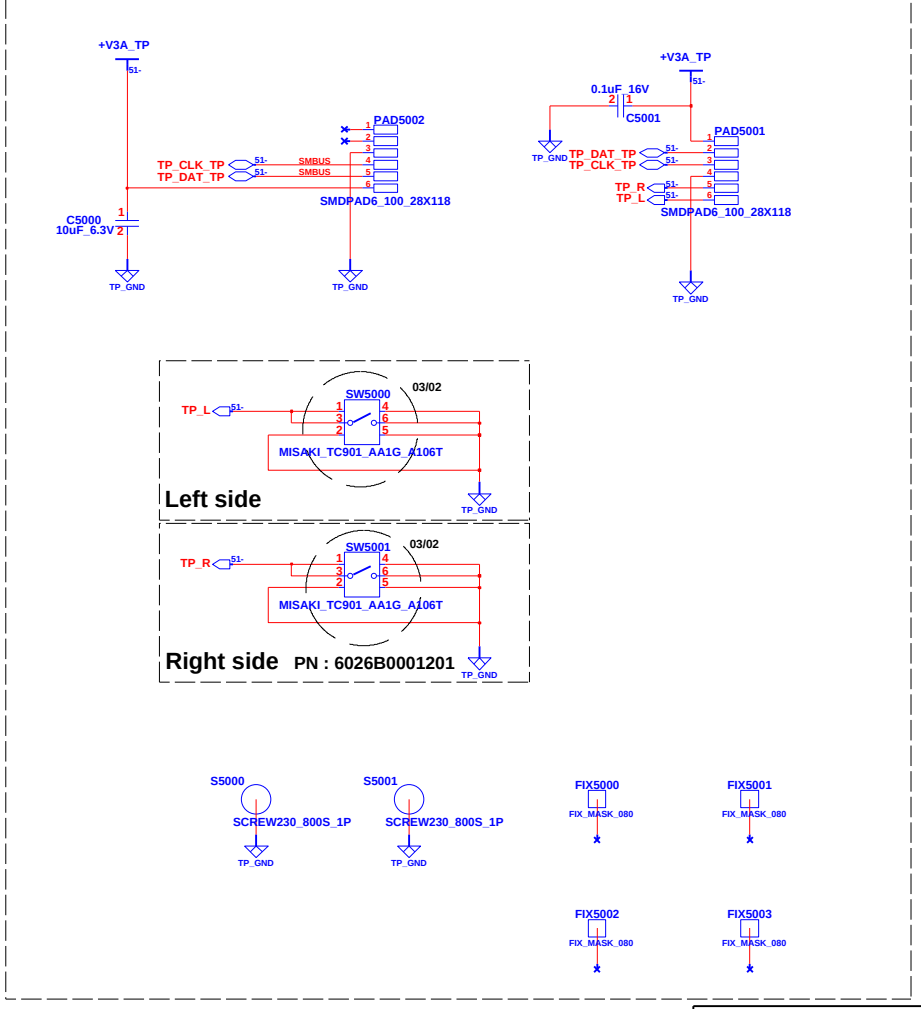

TP LED BOARD

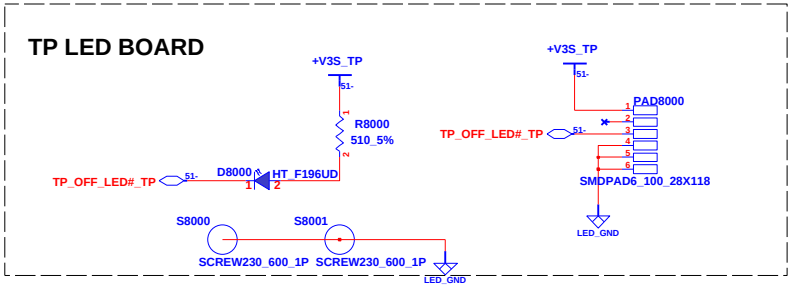

CHANGE by	Chang, Irene	22-Mar-2011	

INVENTEC

TITLE: KITTY

SIZE	CODE	DOC. NUMBER	REV
A3	CS	1310A24245-0-MTR	A

SHEET 51 OF 51