DIABLO 2.0

MP Build

2008.08.11

DATE	CHANGE NO.	REV

	EE	DATE	POWER	DATE
DRAWER				
DESIGN				
CHECK				
RESPONSIBLE				

SIZE = 3 VER :

FILE NAME : XXXX-XXXXXX-XX

P/N XXXXXXXXXXXX

INVENTEC

TITLE *DIABLO 2.0 MV*
Release version : MP 02

SIZE	CODE	DOC. NUMBER	REV
A3	CS	*1310A22155-0-MTR*	*A02*

SHEET 1 OF 61

http://hobi-elektronika.net

TABLE OF CONTENTS

PAGE
5- DC& BATTERY CHARGER
6- BATTERY CONN
7- SYSTEM POWER(3V/5V)
8- SYSTEM POWER(+V1.8/+VCCP)
9- GRAPHIC POWER(+VGFX_CORE)
10- SYSTEM POWER(+V1.5S)
11- CPU POWER(VCC_CORE)
12- DDR TERMINATION VOLTAGE
13- POWER(SLEEP)
14- POWER(SEQUENCE)

PAGE
15- CLOCK_ICS9LPRS397
16- PENRYN-1
17- PENRYN-2
18- PENRYN-3
19- THERMAL & FAN Conn
20- N/B Cantiga-1
21- N/B Cantiga-2
22- N/B Cantiga-3
23- N/B Cantiga-4
24- N/B Cantiga-5
25- N/B Cantiga-6
26- DDR2-DIMM0
27- DDR2-DIMM1
28- DDR2-DAMPING
29- CRT CONN
30- LCM CONN
31- S/B ICH9-1
32- S/B ICH9-2
33- S/B ICH9-3
34- S/B ICH9-4
35- S/B ICH9-5

PAGE
36-
37- HDD&ODD CONN & Accelerometer
38- USB & eSATA CONN
39- KBC & IR & SPI BIOS & T/P Conn
40- KB&TP Disable CONN
41- AUDIO CODEC
42- AUDIO AMP-HP MIC VOL
43- MDC CONN & Audio Jack
44- LAN CONTROLLER- RTL8111C
45- LAN POWER
46- RJ45 CONN
47- MINICARD CONN
48- HDMI CONN & NEW CARD CONN
49- LED & BUTTON
50- SCREW
51- TOUCHPAD BOARD
52- WEB CAM & FINGER PRINT Conn
53- AU6372 Cardreader & 5 IN 1 Conn
54- nVIDIA NB9MGS-1
55- nVIDIA NB9MGS-2
56- nVIDIA NB9MGS-3
57- nVIDIA NB9MGS-4
58- nVIDIA NB9MGS-5
59- VRAM-1
60- VRAM-2
61- Release Note

http://hobi-elektronika.net

INVENTEC			
TITLE DIABLO 2.0			
SIZE A3	CODE CS	DOC. NUMBER 1310A22155-0-MTRA02	REV A02
CHANGE by Wang, Alan	31-Jul-2008	SHEET 2 OF 61	

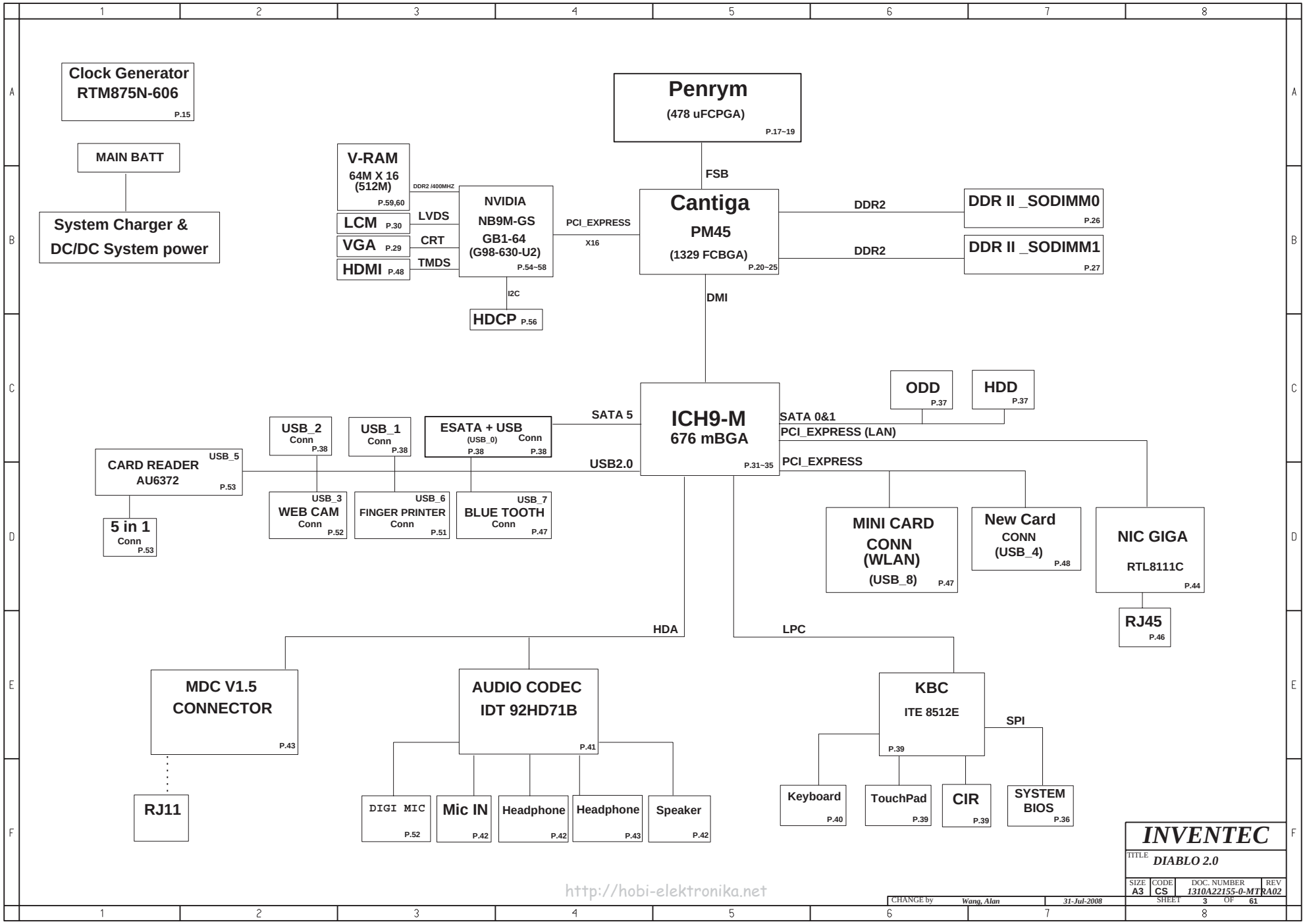

http://hobi-elektronika.net

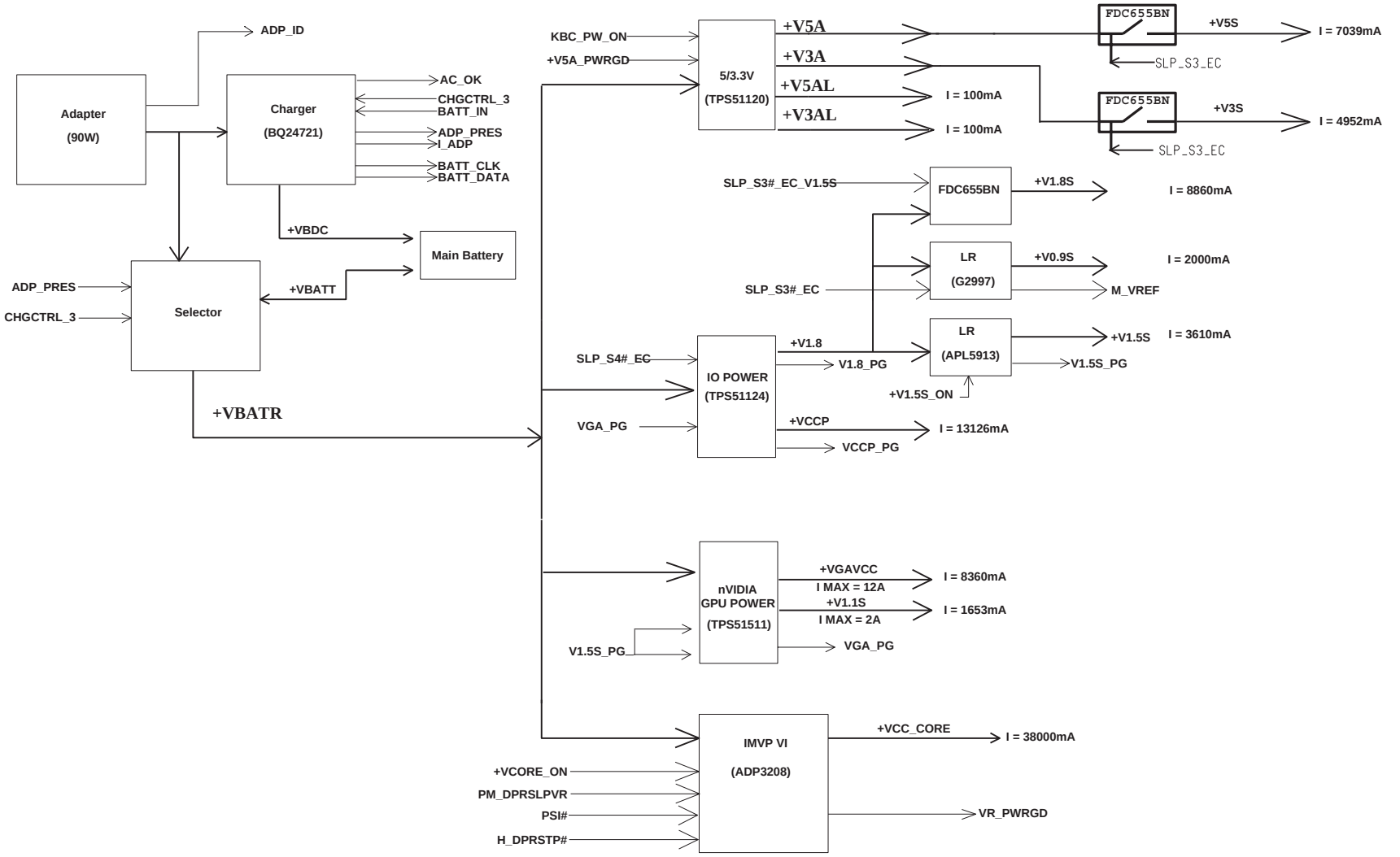

http://hobi-elektronika.net

CHANGE by	Wang, Alan	31-Jul-2008	

INVENTEC

TITLE *DIABLO 2.0*

SIZE	CODE	DOC. NUMBER	REV
A3	CS	1310A22155-0-MTRA02	

SHEET 4 OF 61

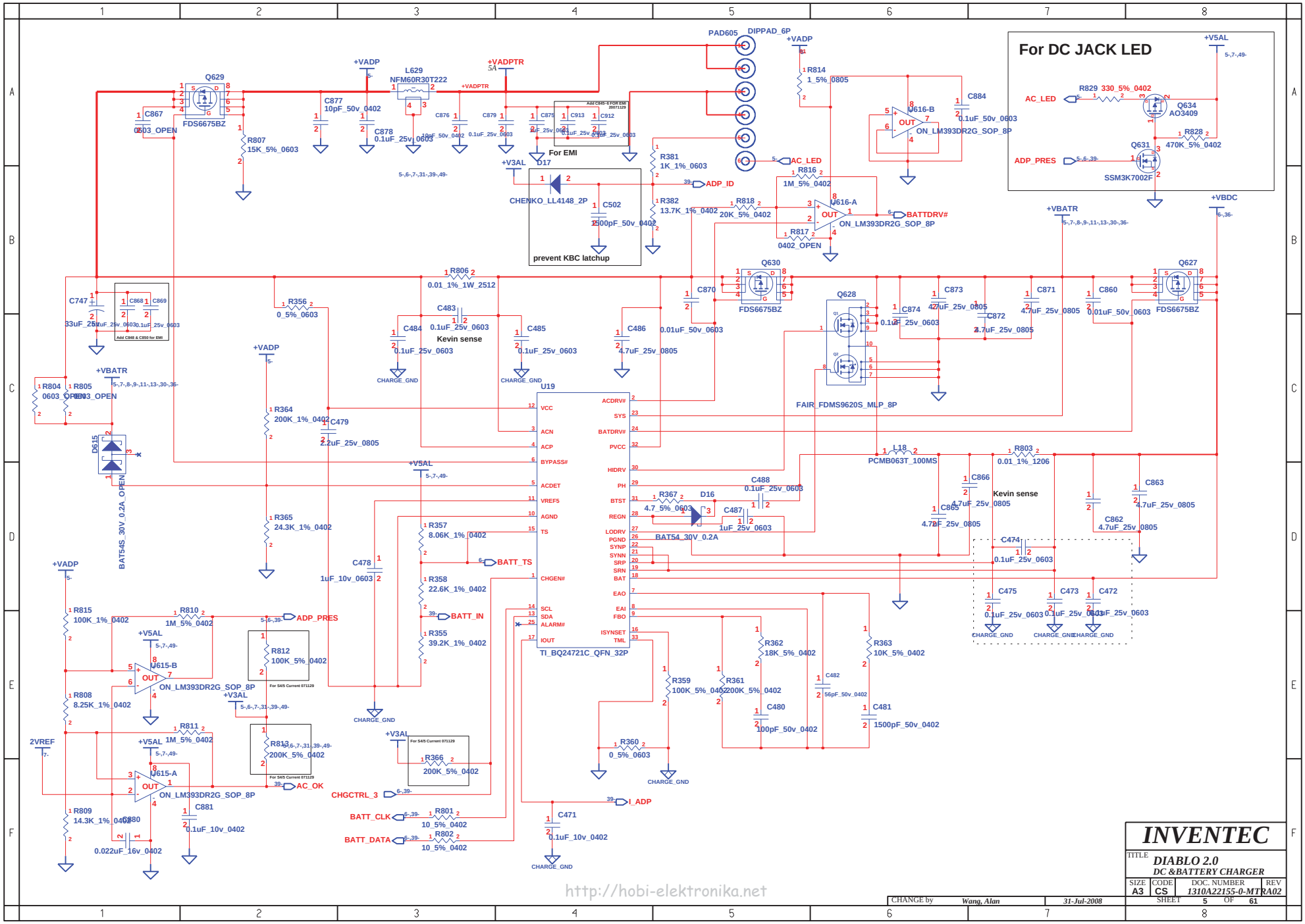
For DC JACK LED
PAD605
DIPPAD_6P
+VADP
+VADPTR
5A
L629
NFM60R30T222
Q629
FDS6675BZ
C867
0603_OPEN
R807
15K_5%_0603
C877
10pF_50v_0402
C878
0.1uF_25v_0603
C876
10uF_50v_0402
C879
0.1uF_25v_0603
C875
C913
C912
For EMI
+V3AL
D17
CHENKO_LL4148_2P
C502
1500pF_50v_0402
prevent KBC latchup
R381
1K_1%_0603
ADP_ID
R382
13.7K_1%_0402
R818
20K_5%_0402
R816
1M_5%_0402
R817
0402_OPEN
U616-A
ON_LM393DR2G_SOP_8P
BATTDRV#
AC_LED
R814
1_5%_0805
U616-B
C884
0.1uF_50v_0603
+V5AL
R829
330_5%_0402
Q634
AO3409
R828
470K_5%_0402
Q631
SSM3K7002F
ADP_PRES
+VBATR
+VBDC
R806
0.01_1%_1W_2512
Q630
FDS6675BZ
Q628
FAIR_FDMS9620S_MLP_8P
Q627
FDS6675BZ
C747
33uF_25v
C868
C869
0.1uF_25v_0603
Add C848 & C850 for EMI
R356
0_5%_0603
C483
0.1uF_25v_0603
Kevin sense
C484
0.1uF_25v_0603
C485
0.1uF_25v_0603
C486
4.7uF_25v_0805
0.01uF_50v_0603
C870
C874
0.1uF_25v_0603
C873
47uF_25v_0805
C872
4.7uF_25v_0805
C871
4.7uF_25v_0805
C860
0.01uF_50v_0603
R804
0603_OPEN
R805
0603_OPEN
D615
BAT54S_30V_0.2A_OPEN
R364
200K_1%_0402
C479
2.2uF_25v_0805
R365
24.3K_1%_0402
U19
TI_BQ24721C_QFN_32P
VCC
ACN
ACP
BYPASS#
ACDET
VREF5
AGND
TS
CHGEN#
SCL
SDA
ALARM#
IOUT
ACDRV#
SYS
BATDRV#
PVCC
HIDRV
PH
BTST
REGN
LODRV
PGND
SYNP
SYNN
SRP
SRN
BAT
EAO
EAI
FBO
ISYNSET
TML
R367
4.7_5%_0603
D16
BAT54_30V_0.2A
C487
1uF_25v_0603
C488
0.1uF_25v_0603
L18
PCMB063T_100MS
R803
0.01_1%_1206
C866
4.7uF_25v_0805
C865
4.7uF_25v_0805
Kevin sense
C863
4.7uF_25v_0805
C862
4.7uF_25v_0805
C474
0.1uF_25v_0603
C475
0.1uF_25v_0603
C473
0.1uF_25v_0603
C472
0.1uF_25v_0603
CHARGE_GND
C478
1uF_10v_0603
R357
8.06K_1%_0402
BATT_TS
R358
22.6K_1%_0402
BATT_IN
R355
39.2K_1%_0402
R815
100K_1%_0402
R810
1M_5%_0402
R812
100K_5%_0402
For 54/5 Current 071129
U615-B
ON_LM393DR2G_SOP_8P
R808
8.25K_1%_0402
R811
1M_5%_0402
R813
200K_5%_0402
U615-A
ON_LM393DR2G_SOP_8P
AC_OK
2VREF
R809
14.3K_1%_0402
C880
0.022uF_16v_0402
C881
0.1uF_10v_0402
CHGCTRL_3
BATT_CLK
BATT_DATA
R801
10_5%_0402
R802
10_5%_0402
R366
200K_5%_0402
R359
100K_5%_0402
R361
200K_5%_0402
R362
18K_5%_0402
R363
10K_5%_0402
C482
56pF_50v_0402
C480
100pF_50v_0402
C481
1500pF_50v_0402
R360
0_5%_0603
I_ADP
C471
0.1uF_10v_0402
http://hobi-elektronika.net
INVENTEC
TITLE
DIABLO 2.0
DC &BATTERY CHARGER
SIZE A3
CODE CS
DOC. NUMBER 1310A22155-0-MTRA02
REV
SHEET 5 OF 61
CHANGE by Wang, Alan
31-Jul-2008

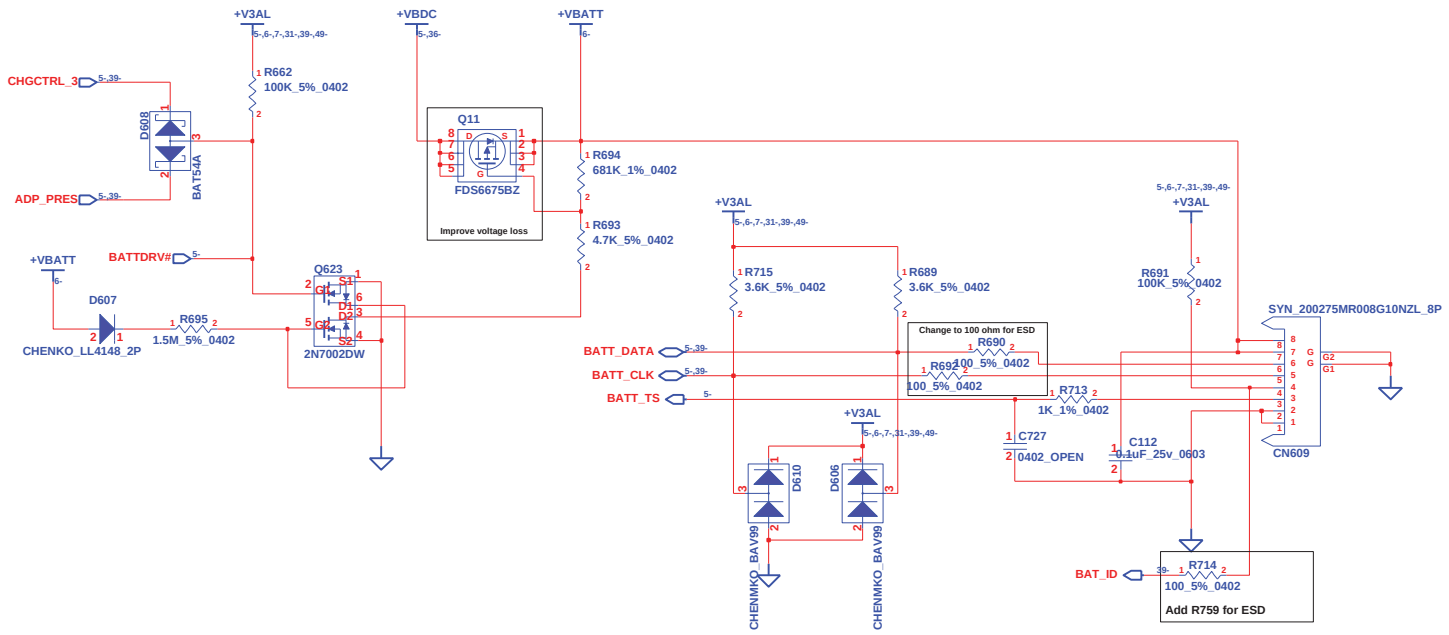

http://hobi-elektronika.net

CHANGE by	Wang, Alan	31-Jul-2008	

INVENTEC

TITLE: *DIABLO 2.0*
BATTERY CONN

SIZE	CODE	DOC. NUMBER	REV
A3	CS	1310A22155-0-MTRA02	

SHEET 6 OF 61

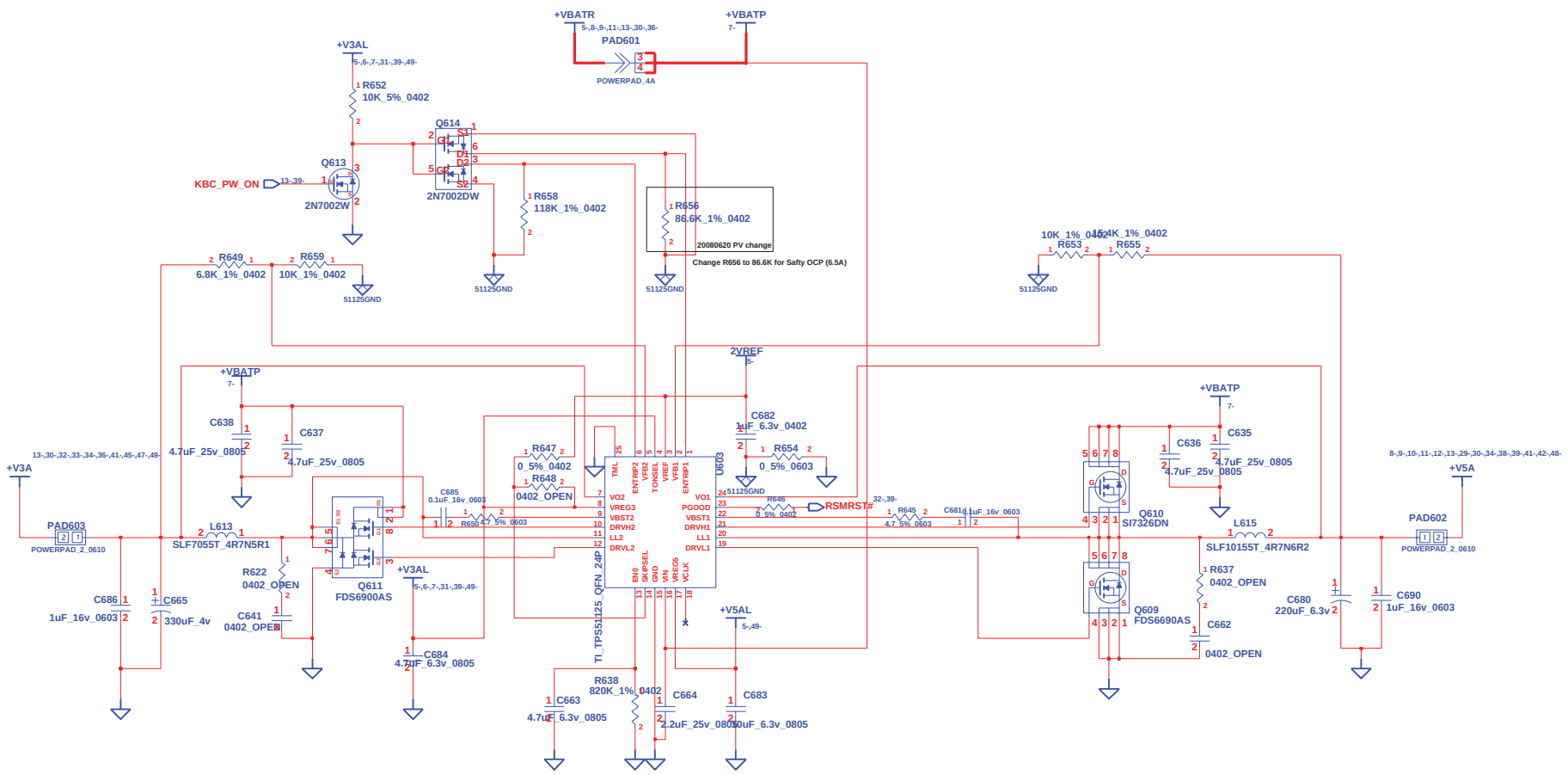

http://hobi-elektronika.net

CHANGE by	Wang, Alan	31-Jul-2008	

INVENTEC

TITLE: *DIABLO 2.0*
SYSTEM POWER(3V/5V/12V)

SIZE	CODE	DOC. NUMBER	REV
A3	CS	1310A22155-0-MTRA02	

SHEET 7 OF 61

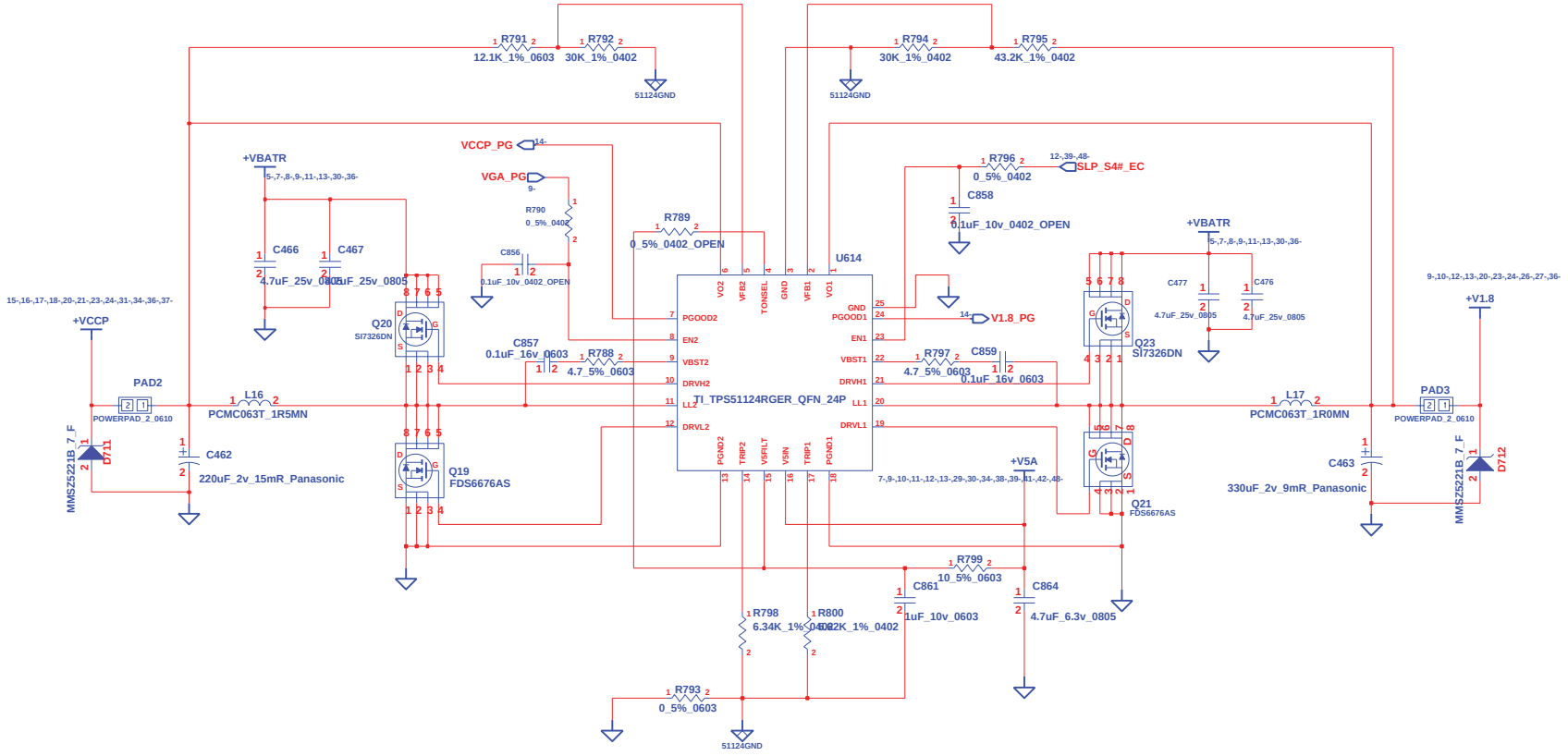

INVENTEC

TITLE
DIABLO 2.0
SYSTEM POWER(+V1.8/+V1.25S)

SIZE	CODE	DOC. NUMBER	REV
A3	CS	1310A22155-0-MTRA02	

CHANGE by Wang, Alan 11-Aug-2008

SHEET 8 OF 61

http://hobi-elektronika.net

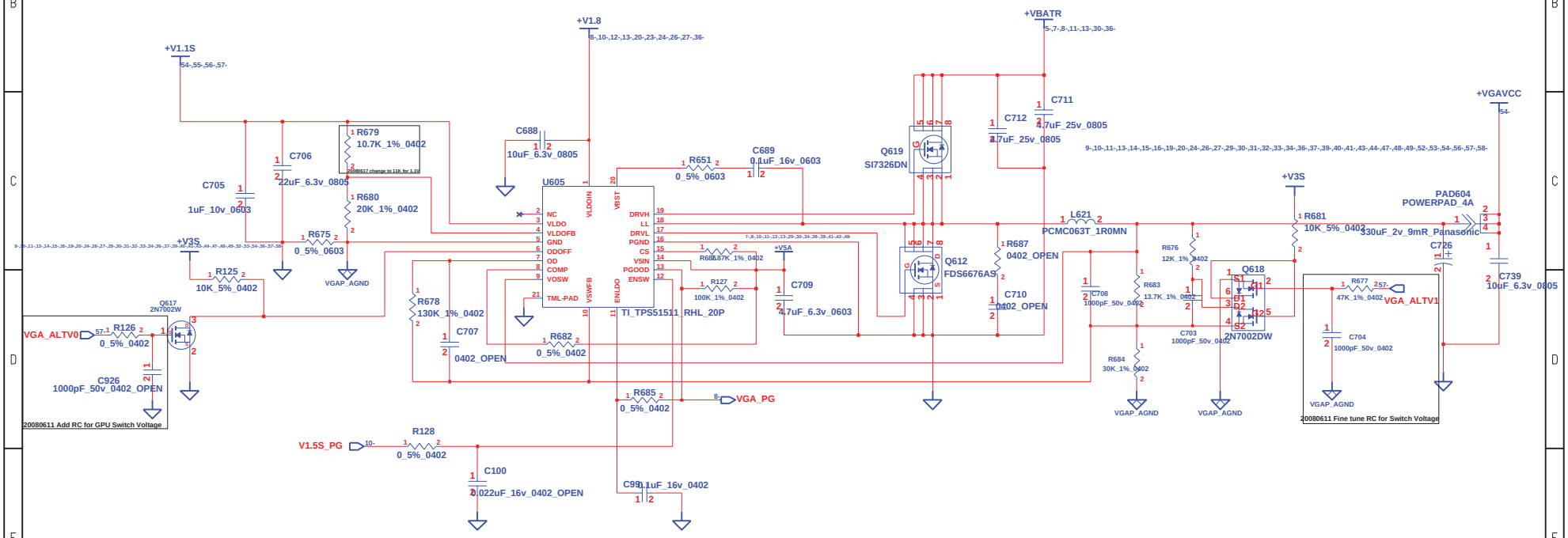

VGA_ALTV1 (GPIO6)	VGA_ALTV0 (GOIP5)	+VGAVCC
0	0	0.9
1	0	1.09
1	1	1.17

INVENTEC

TITLE: *DIABLO 2.0*
GRAPHIC POWER (+VGFX_CORE)

SIZE	CODE	DOC. NUMBER	REV
A3	CS	1310A22155-0-MTRA02	

SHEET 9 OF 61

CHANGE by *Wang, Alan* *31-Jul-2008*

http://hobi-elektronika.net

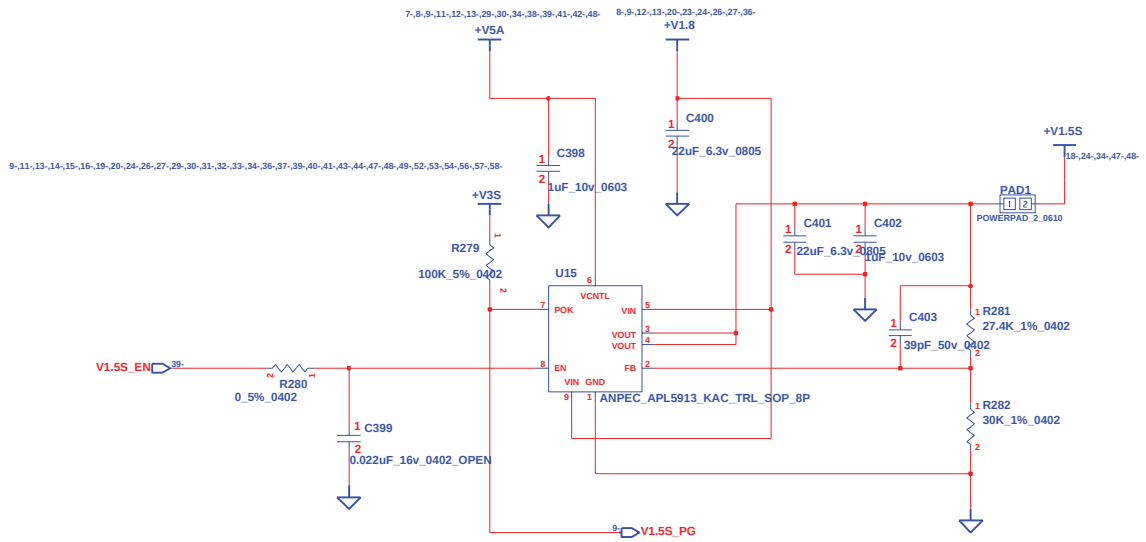

http://hobi-elektronika.net

CHANGE by	Wang, Alan	31-Jul-2008	

INVENTEC

TITLE: *DIABLO 2.0*
SYSTEM POWER(+VCCP/+V1.5S)

SIZE	CODE	DOC. NUMBER	REV
A3	CS	1310A22155-0-MTRA02	

SHEET 10 OF 61

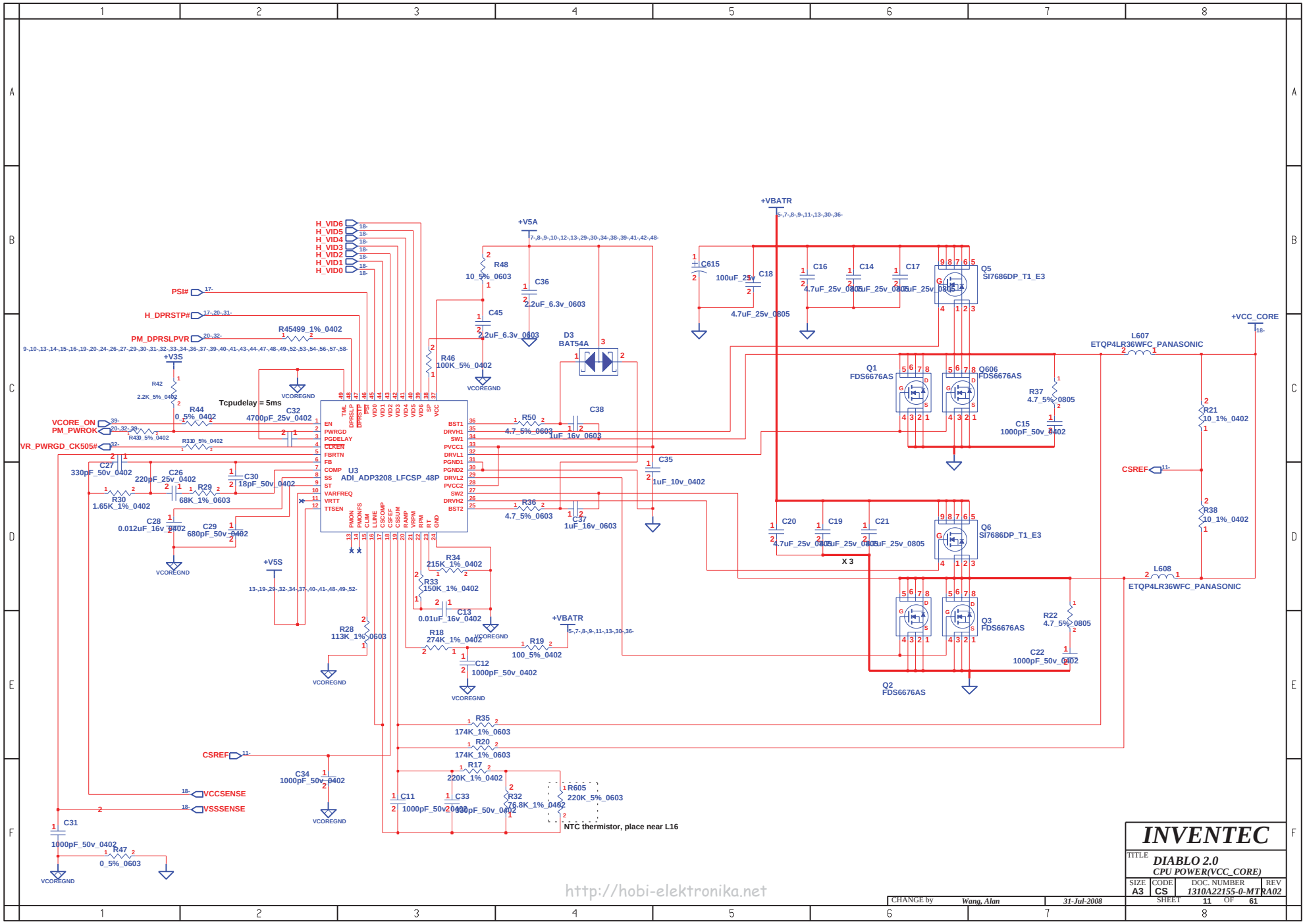

http://hobi-elektronika.net

CHANGE by	Wang, Alan	31-Jul-2008	

INVENTEC

TITLE: *DIABLO 2.0*
CPU POWER(VCC_CORE)

SIZE	CODE	DOC. NUMBER	REV
A3	CS	1310A22155-0-MTRA02	

SHEET 11 OF 61

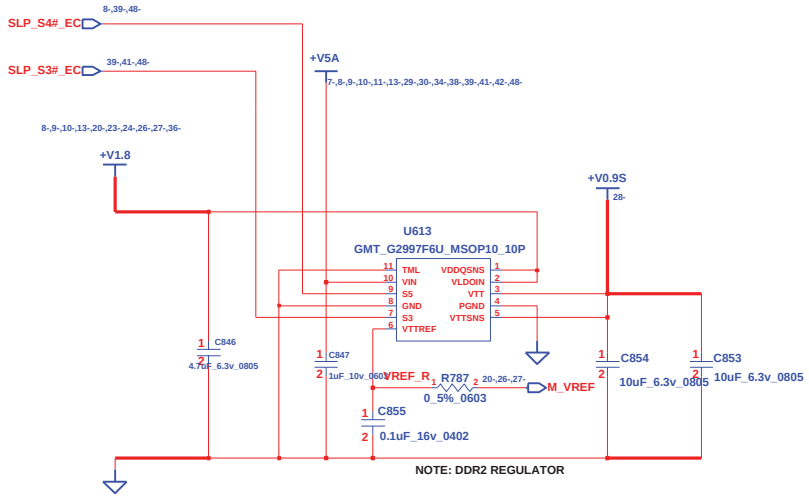

http://hobi-elektronika.net

CHANGE by	Wang, Alan	31-Jul-2008	

INVENTEC

TITLE: *DIABLO 2.0*
DDR TERMINATION VOLTAGE

SIZE	CODE	DOC. NUMBER	REV
A3	CS	1310A22155-0-MTRA02	

SHEET 12 OF 61

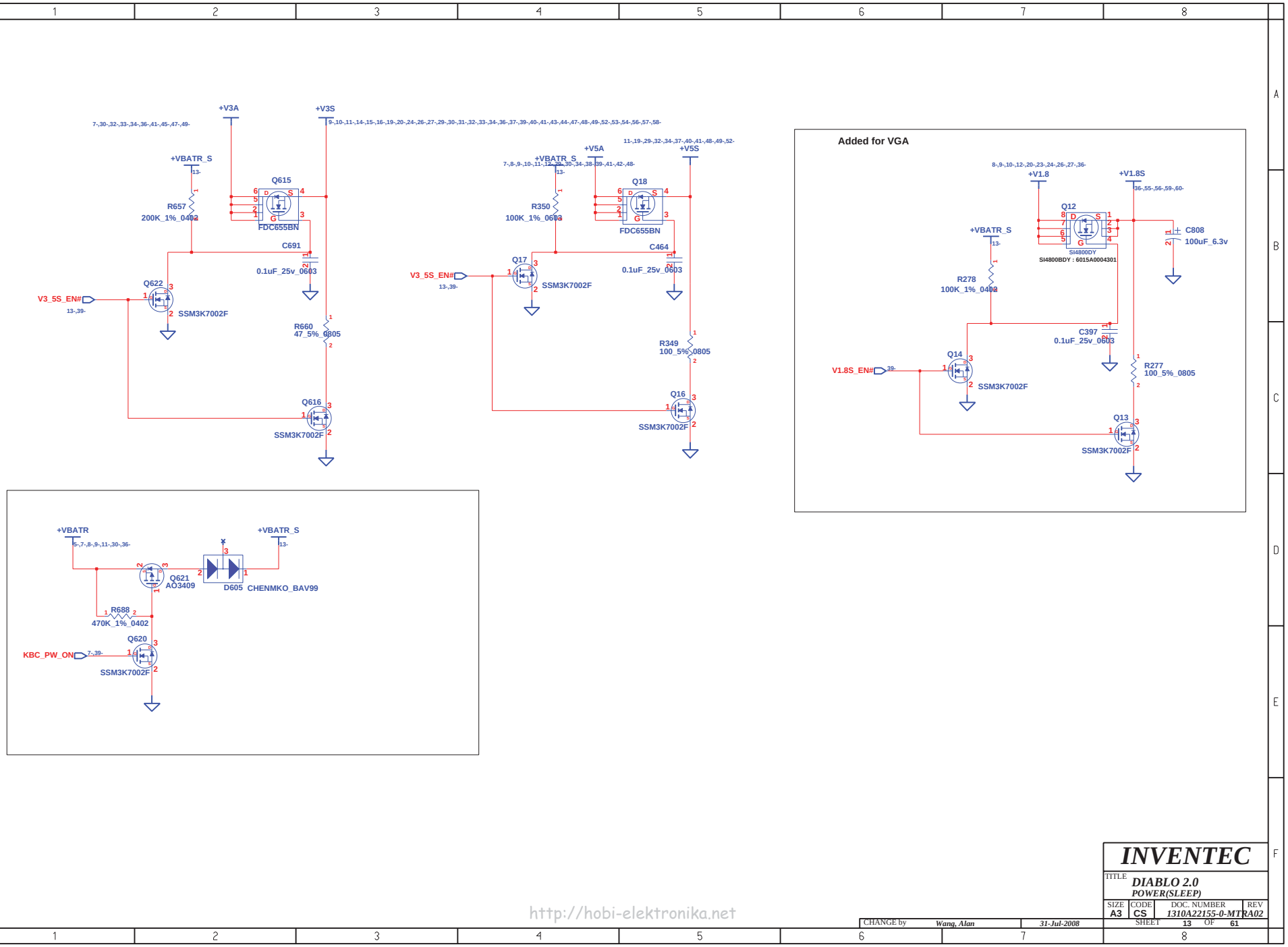

http://hobi-elektronika.net

CHANGE by	Wang, Alan	31-Jul-2008	

INVENTEC

TITLE: DIABLO 2.0
POWER(SLEEP)

SIZE	CODE	DOC. NUMBER	REV
A3	CS	1310A22155-0-MTRA02	

SHEET 13 OF 61

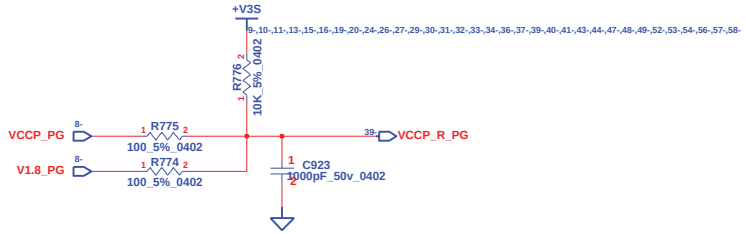

http://hobi-elektronika.net

CHANGE by	Wang, Alan	31-Jul-2008	

INVENTEC

TITLE *DIABLO 2.0*
POWER(SEQUENCE)

SIZE	CODE	DOC. NUMBER	REV
A3	CS	1310A22155-0-MTRA02	

SHEET 14 OF 61

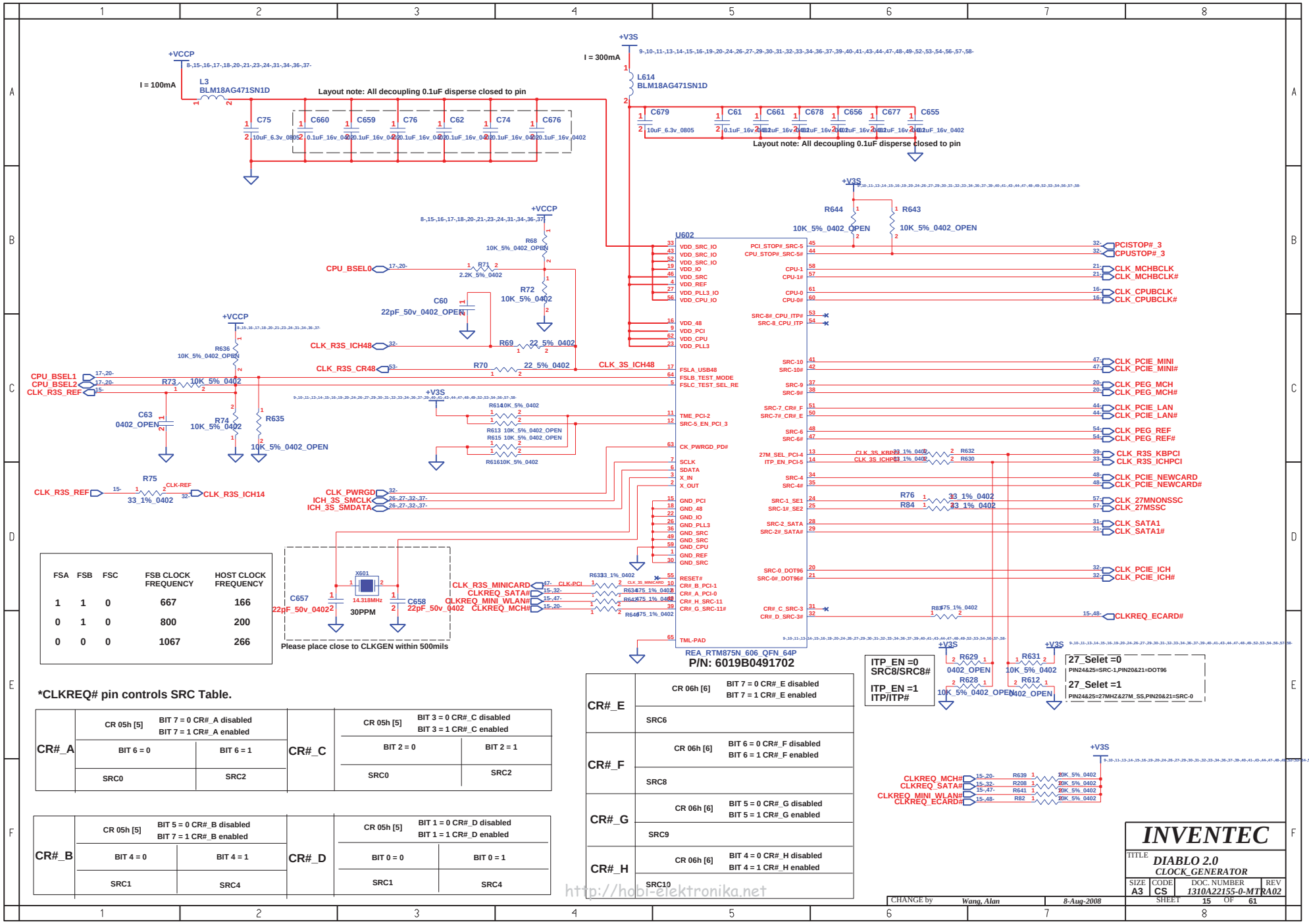

FSA	FSB	FSC	FSB CLOCK FREQUENCY	HOST CLOCK FREQUENCY
1	1	0	667	166
0	1	0	800	200
0	0	0	1067	266

*CLKREQ# pin controls SRC Table.

CR#_A	CR 05h [5]	BIT 7 = 0 CR#_A disabled BIT 7 = 1 CR#_A enabled	CR#_C	CR 05h [5]	BIT 3 = 0 CR#_C disabled BIT 3 = 1 CR#_C enabled
	BIT 6 = 0	BIT 6 = 1		BIT 2 = 0	BIT 2 = 1
	SRC0	SRC2		SRC0	SRC2

CR#_B	CR 05h [5]	BIT 5 = 0 CR#_B disabled BIT 7 = 1 CR#_B enabled	CR#_D	CR 05h [5]	BIT 1 = 0 CR#_D disabled BIT 1 = 1 CR#_D enabled
	BIT 4 = 0	BIT 4 = 1		BIT 0 = 0	BIT 0 = 1
	SRC1	SRC4		SRC1	SRC4

CR#_E	CR 06h [6]	BIT 7 = 0 CR#_E disabled BIT 7 = 1 CR#_E enabled
	SRC6	
CR#_F	CR 06h [6]	BIT 6 = 0 CR#_F disabled BIT 6 = 1 CR#_F enabled
	SRC8	
CR#_G	CR 06h [6]	BIT 5 = 0 CR#_G disabled BIT 5 = 1 CR#_G enabled
	SRC9	
CR#_H	CR 06h [6]	BIT 4 = 0 CR#_H disabled BIT 4 = 1 CR#_H enabled
	SRC10	

http://hobi-elektronika.net

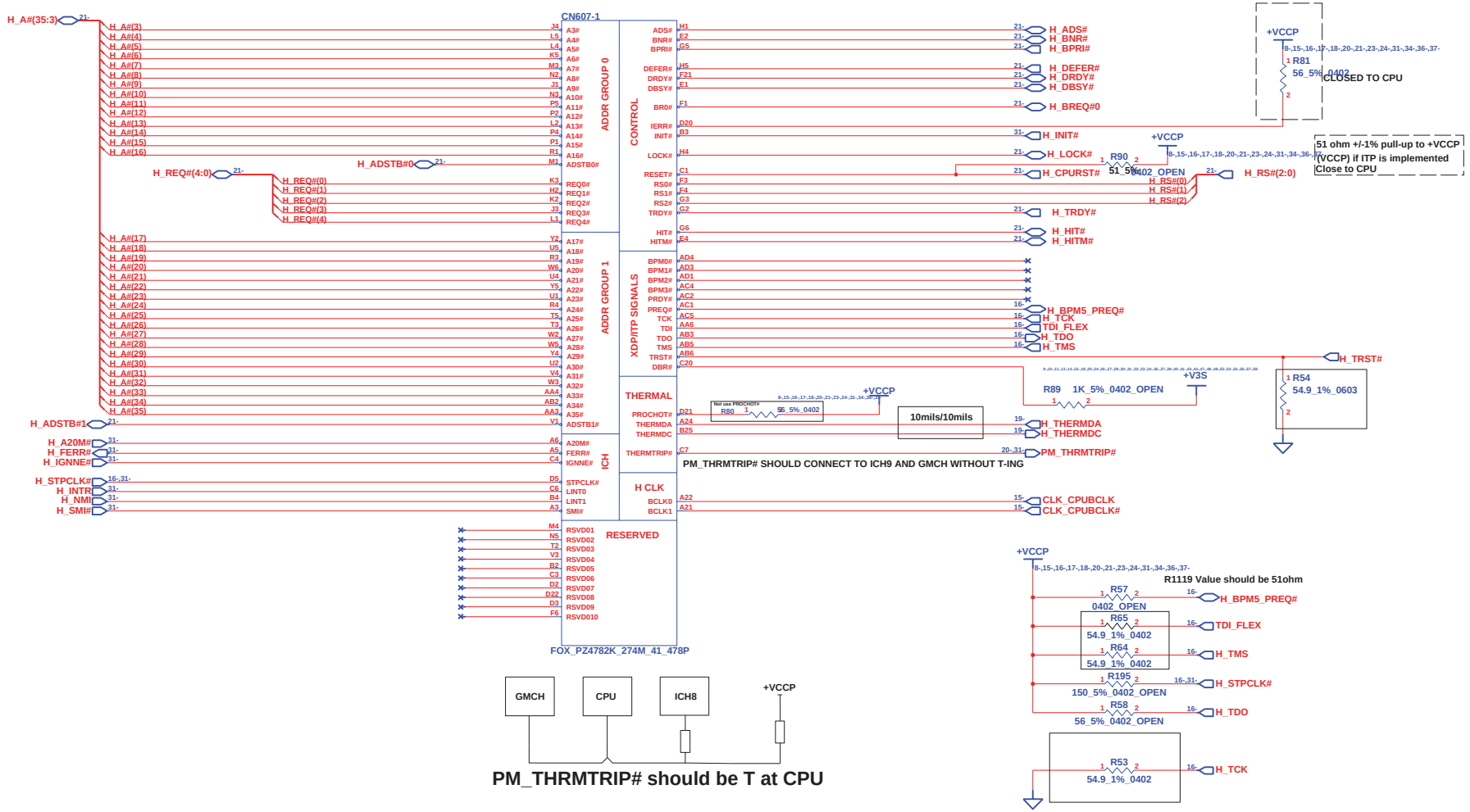

http://hobi-elektronika.net

INVENTEC			
TITLE DIABLO 2.0 PENRYN-1			
SIZE A3	CODE CS	DOC. NUMBER 1310A22155-0-MTRA02	REV
CHANGE by Wang, Alan	31-Jul-2008	SHEET 16 OF 61	

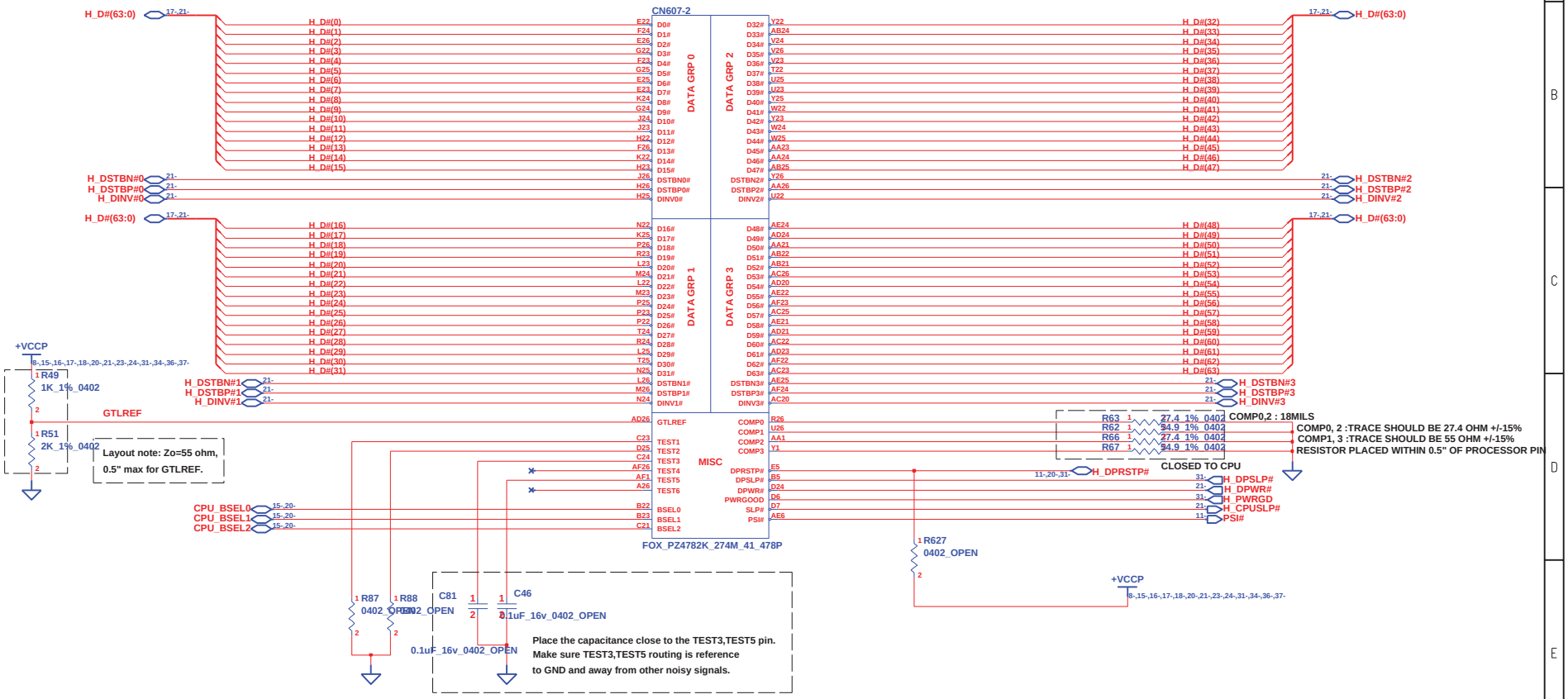

INVENTEC			
TITLE DIABLO 2.0 PENYN-2			
SIZE A3	CODE CS	DOC. NUMBER 1310A22155-0-MTRA02	REV
CHANGE by Wang, Alan	31-Jul-2008	SHEET 17 OF 61	

http://hobi-elektronika.net

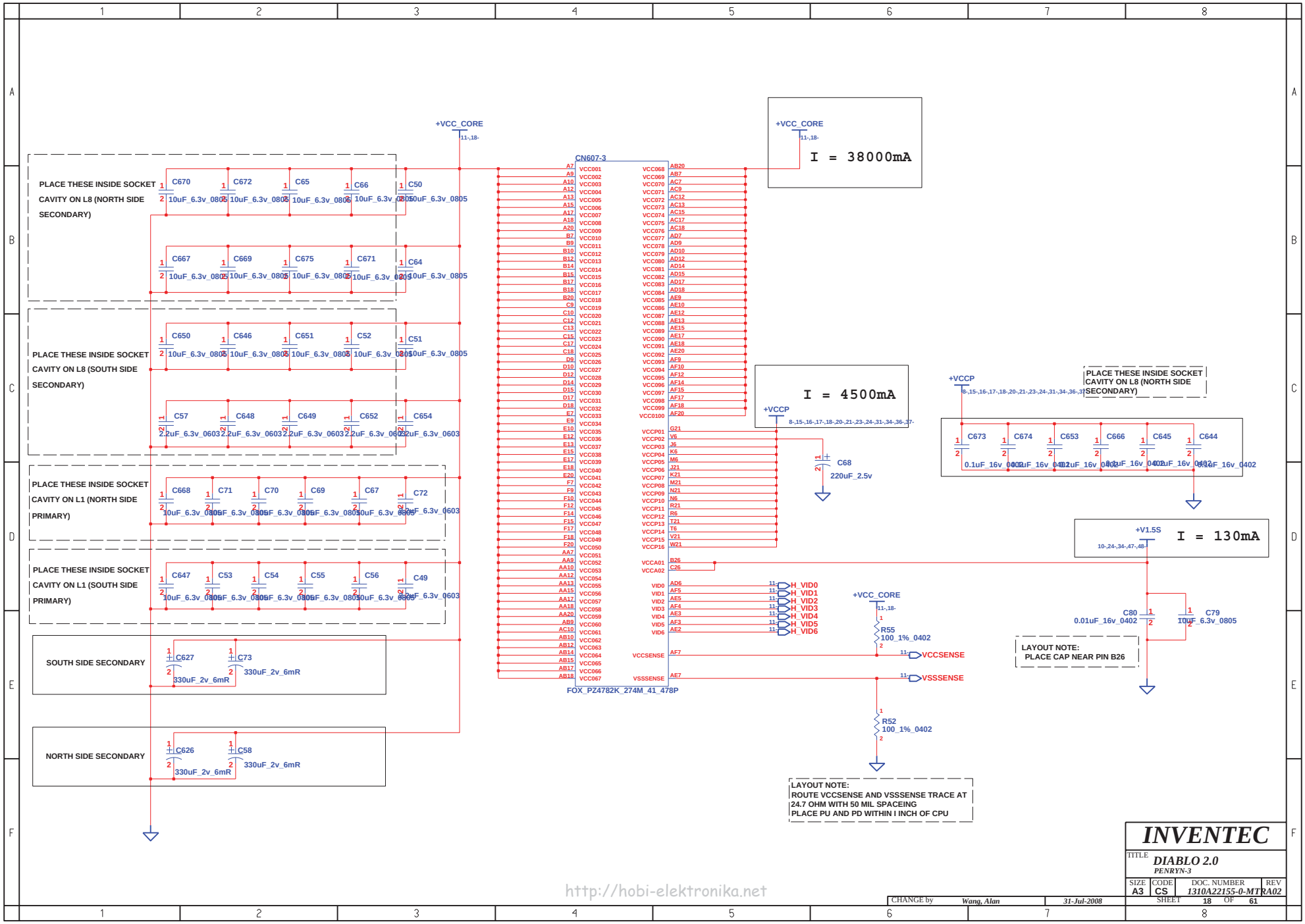
PLACE THESE INSIDE SOCKET CAVITY ON L8 (NORTH SIDE SECONDARY)
C670 10uF_6.3v_0805
C672 10uF_6.3v_0805
C65 10uF_6.3v_0805
C66 10uF_6.3v_0805
C50 10uF_6.3v_0805
C667 10uF_6.3v_0805
C669 10uF_6.3v_0805
C675 10uF_6.3v_0805
C671 10uF_6.3v_0805
C64 10uF_6.3v_0805
PLACE THESE INSIDE SOCKET CAVITY ON L8 (SOUTH SIDE SECONDARY)
C650 10uF_6.3v_0805
C646 10uF_6.3v_0805
C651 10uF_6.3v_0805
C52 10uF_6.3v_0805
C51 10uF_6.3v_0805
C57 2.2uF_6.3v_0603
C648 2.2uF_6.3v_0603
C649 2.2uF_6.3v_0603
C652 2.2uF_6.3v_0603
C654 2.2uF_6.3v_0603
PLACE THESE INSIDE SOCKET CAVITY ON L1 (NORTH SIDE PRIMARY)
C668 10uF_6.3v_0805
C71 10uF_6.3v_0805
C70 10uF_6.3v_0805
C69 10uF_6.3v_0805
C67 10uF_6.3v_0805
C72 2.2uF_6.3v_0603
PLACE THESE INSIDE SOCKET CAVITY ON L1 (SOUTH SIDE PRIMARY)
C647 10uF_6.3v_0805
C53 10uF_6.3v_0805
C54 10uF_6.3v_0805
C55 10uF_6.3v_0805
C56 10uF_6.3v_0805
C49 2.2uF_6.3v_0603
SOUTH SIDE SECONDARY
C627 330uF_2v_6mR
C73 330uF_2v_6mR
NORTH SIDE SECONDARY
C626 330uF_2v_6mR
C58 330uF_2v_6mR
+VCC_CORE
11-,18-
CN607-3
FOX_PZ4782K_274M_41_478P
I = 38000mA
I = 4500mA
+VCCP
8-,15-,16-,17-,18-,20-,21-,23-,24-,31-,34-,36-,37-
C68 220uF_2.5v
PLACE THESE INSIDE SOCKET CAVITY ON L8 (NORTH SIDE SECONDARY)
C673 0.1uF_16v_0402
C674 0.1uF_16v_0402
C653 0.1uF_16v_0402
C666 0.1uF_16v_0402
C645 0.1uF_16v_0402
C644 0.1uF_16v_0402
+V1.5S
10-,24-,34-,47-,48-
I = 130mA
H_VID0
H_VID1
H_VID2
H_VID3
H_VID4
H_VID5
H_VID6
R55 100_1%_0402
VCCSENSE
VSSSENSE
R52 100_1%_0402
C80 0.01uF_16v_0402
C79 10uF_6.3v_0805
LAYOUT NOTE:
PLACE CAP NEAR PIN B26
LAYOUT NOTE:
ROUTE VCCSENSE AND VSSSENSE TRACE AT 24.7 OHM WITH 50 MIL SPACEING
PLACE PU AND PD WITHIN I INCH OF CPU
INVENTEC
TITLE DIABLO 2.0
PENRYN-3
SIZE A3
CODE CS
DOC. NUMBER 1310A22155-0-MTRA02
REV A02
CHANGE by Wang, Alan
31-Jul-2008
SHEET 18 OF 61
http://hobi-elektronika.net

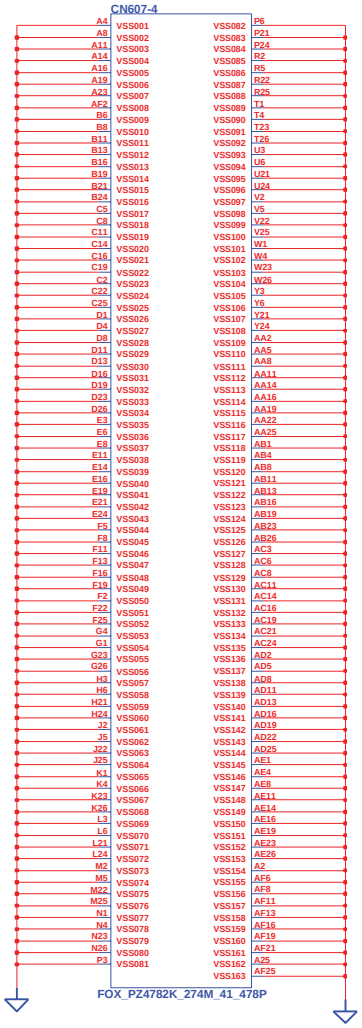

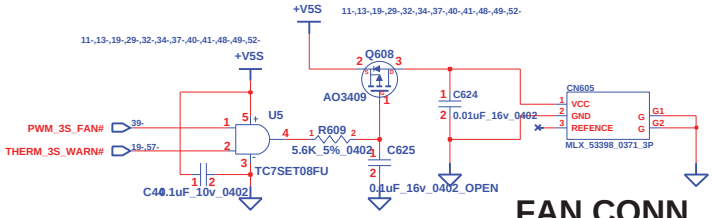

SI Change U5 from 6019A0092101 to 6019A0059801

FAN CONN

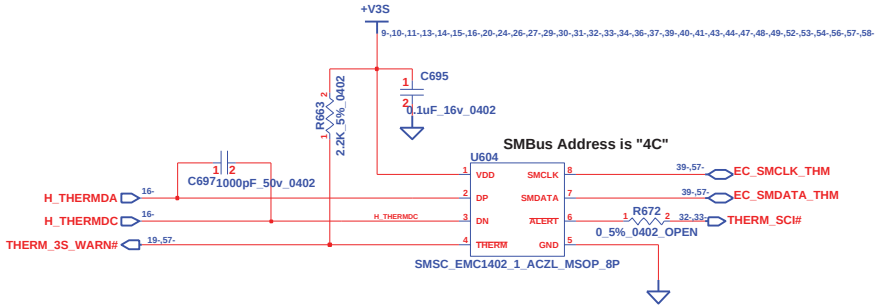

SMBus Address is "4C"

http://hobi-elektronika.net

INVENTEC			
TITLE: DIABLO 2.0 THERMAL&FAN			
SIZE A3	CODE CS	DOC. NUMBER 1310A22155-0-MTRA02	REV
CHANGE by Wang, Alan	31-Jul-2008	SHEET 19 OF 61	

MCH_CFG(5)	LOW=DMIx2 HIGH=DMIx4

MCH_CFG(7) (CPU Strap)	LOW=RSVD HIGH=Mobile CPU

MCH_CFG(9) PCIE Graphics Lane	LOW=Reverse Lane HIGH=Normal operation

MCH_CFG(13:12) XOR/ALLZ	00=PARTIAL CLOCK GATING DISABLE 01=XOR MODE ENABLE 10=ALL-Z MODE ENABLE 11=NORMAL OPERATION

MCH_CFG(16) (FSB Dynamic ODT)	LOW=Dynamic ODT Disable HIGH=Dynamic ODT Enable

NOTE: CFG[2:0] STRP : 011b : 667 MT/S
010 : 800 MT/S
000 : 1067 MT/S

NOTE : USE 4K-OHM RESISTOR WHEN INSTALLING PULL-UP/PULL-DOWN RESISTOR ON ANY MCH-CFG CONNECTION/PINS.

U606 : 6019B0407001

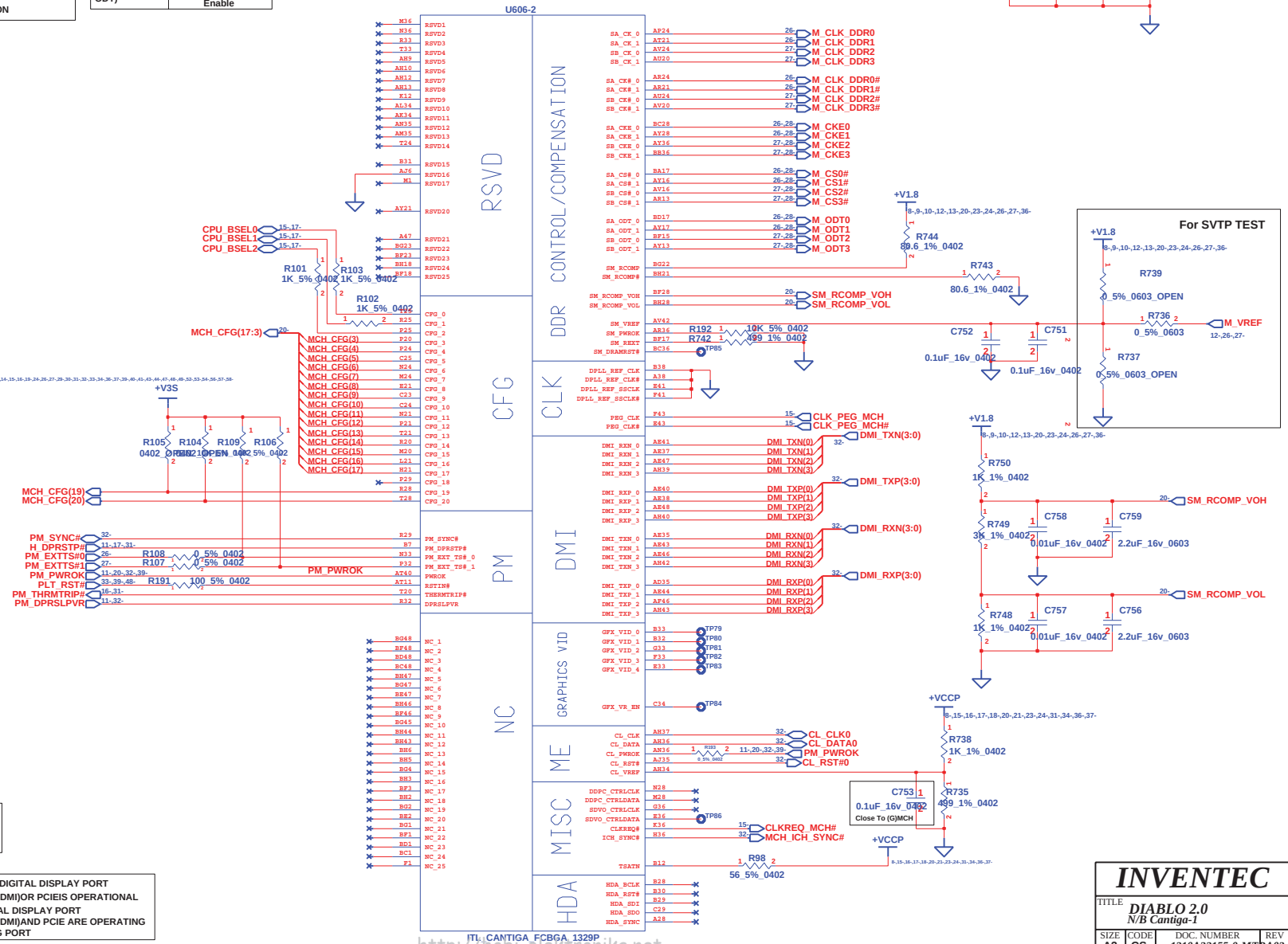

MCH_CFG(19) (DMI LANE REVERSAL)	LOW=NORMAL HIGH=LANES REVERSED

MCH_CFG(20) DIGIAL DISPLAY PORT(SDVO/DP/iHDMI) CONCURRENT WITH PCIE	LOW=ONLY DIGITAL DISPLAY PORT (SDVO/DP/iHDMI)OR PCIEIS OPERATIONAL HIGH=DIGITAL DISPLAY PORT (SDVO/DP/iHDMI)AND PCIE ARE OPERATING VIA THE PEG PORT

http://nobi-elektronika.net

CHANGE by	Wang, Alan	12-Aug-2008	

INVENTEC

TITLE: DIABLO 2.0
N/B Cantiga-1

SIZE	CODE	DOC. NUMBER	REV
A3	CS	1310A22155-0-MTRA02	

SHEET 20 OF 61

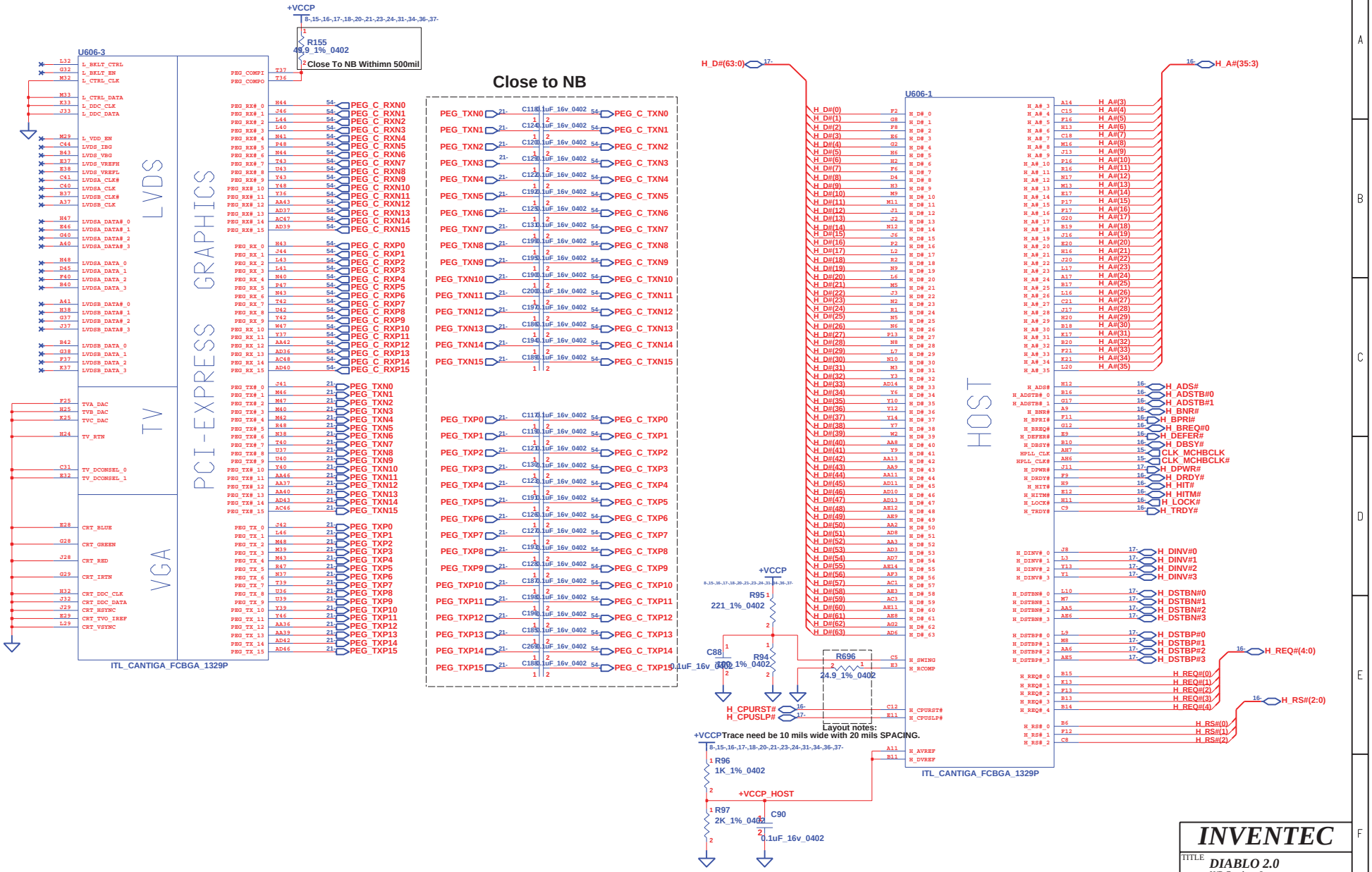

INVENTEC

TITLE: DIABLO 2.0
N/B Cantiga - 2

SIZE	CODE	DOC. NUMBER	REV
A3	CS	1310A22155-0-MTRA02	

SHEET 21 OF 61

CHANGE by Wang, Alan 31-Jul-2008

http://hobi-elektronika.net

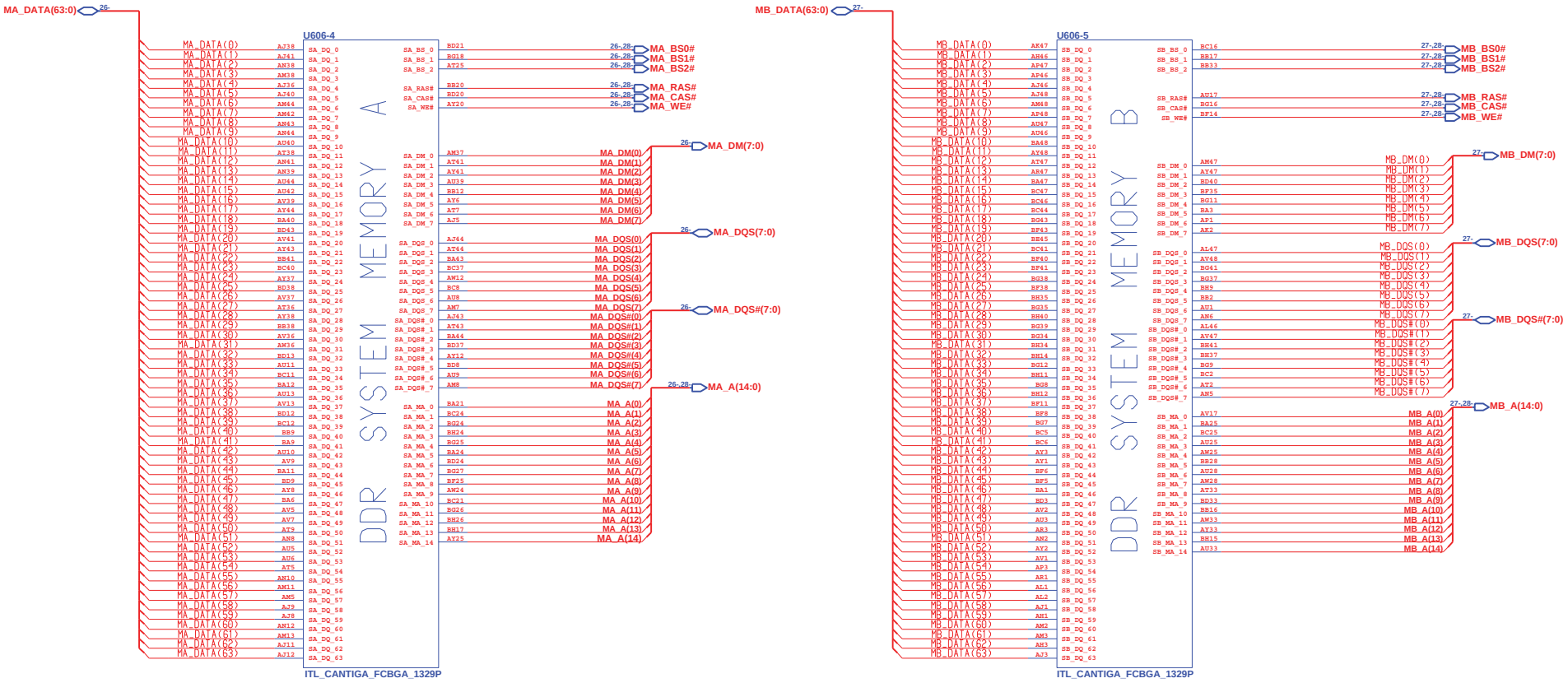

http://hobi-elektronika.net

CHANGE by	Wang, Alan	31-Jul-2008	

INVENTEC

TITLE: *DIABLO 2.0*
N/B Cantiga - 3

SIZE	CODE	DOC. NUMBER	REV
A3	CS	1310A22155-0-MTRA02	

SHEET 22 OF 61

667MHZ : I = 2600mA
800MHZ : I = 3000mA

+V1.8

U606-7

VCC SM POWER

VCC GFX NCTF

VCC GFX

VCC SM LF

ITL_CANTIGA_FCBGA_1329P

+VCCP I = 3060mA

C266 47uF 6.3v

C178 22uF_6.3v_0805

C179 0.22uF_16v_0402

C182 0.22uF_16v_0402

C184 0.1uF_16v_0402

308 mils from the Edge

Cavity Capacitors

+V1.8

C780 0.1uF_16v_0402

C265 220uF_2.5v

C761 22uF_6.3v_0805

C760 22uF_6.3v_0805

U606-6

VCC CORE POWER

VCC NCTF

ITL_CANTIGA_FCBGA_1329P

+VCCP

C259 0.1uF_16v_0402

C258 22uF_16v_0402

C257 22uF_16v_0402

C263 22uF_16v_0402

C268 22uF_6.3v_0805

C267 1uF_10v_0603

C762 1uF_10v_0603

http://hobi-elektronika.net

CHANGE by	Wang, Alan	31-Jul-2008	

INVENTEC

TITLE DIABLO 2.0
N/B Cantiga - 4

SIZE	CODE	DOC. NUMBER	REV
A3	CS	1310A22155-0-MTRA02	

SHEET 23 OF 61

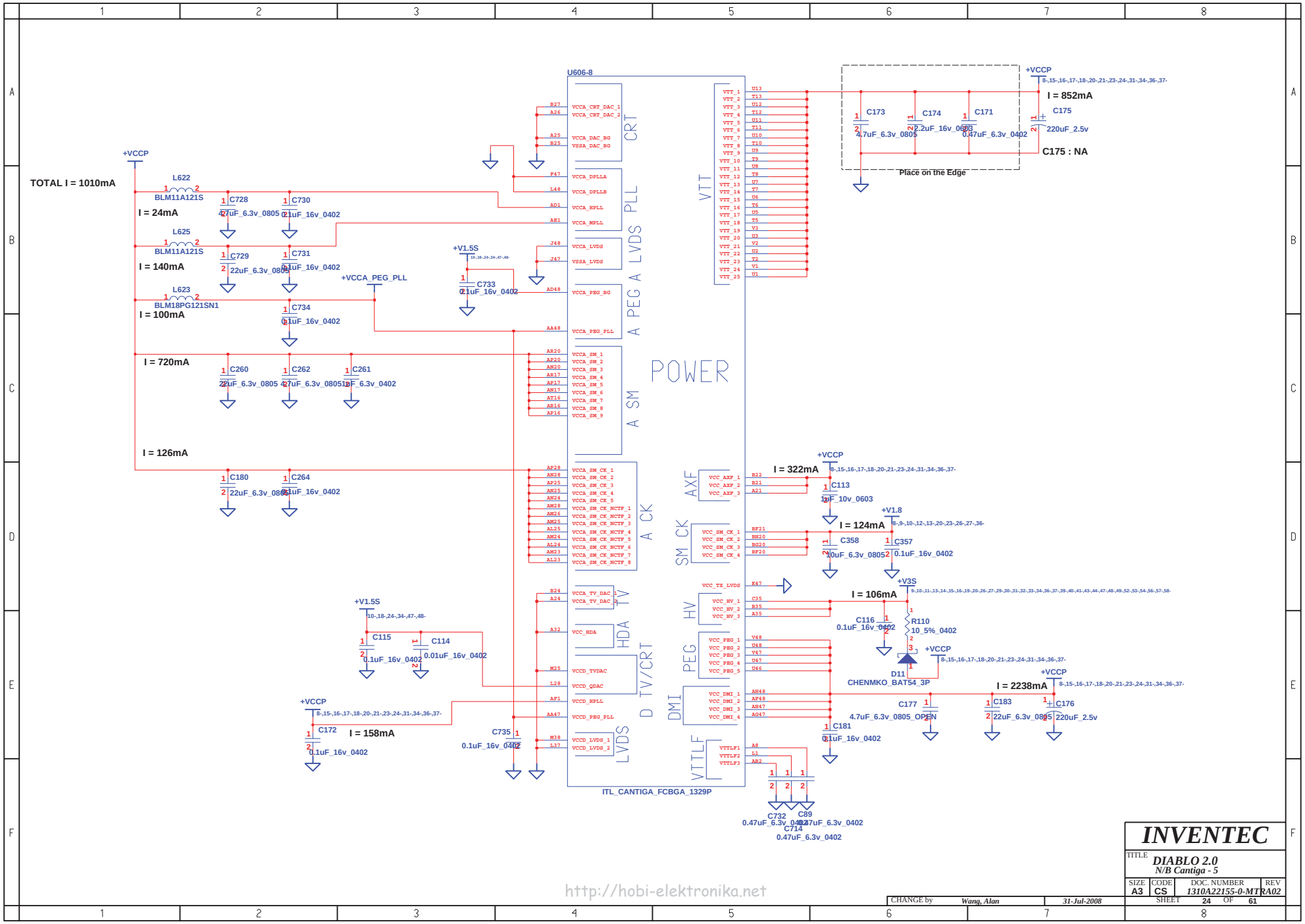

http://hobi-elektronika.net

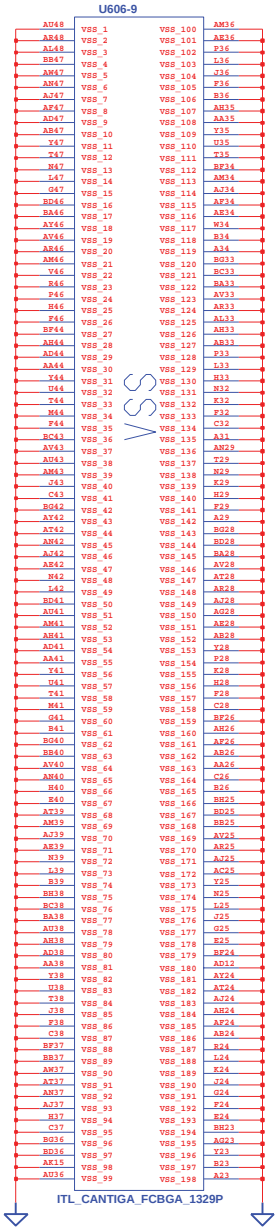

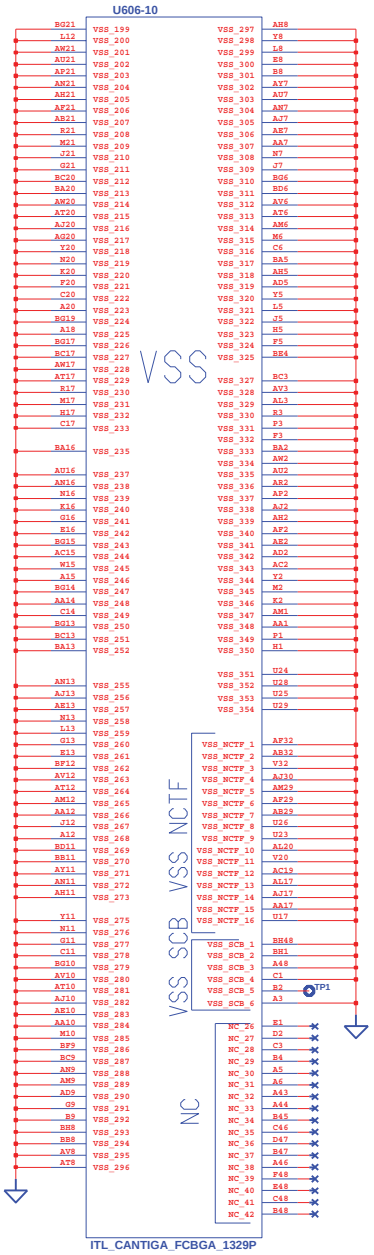

http://hobi-elektronika.net

CHANGE by	Wang, Alan	12-Aug-2008	

INVENTEC

TITLE: *DIABLO 2.0*
N/B Cantiga - 6

SIZE	CODE	DOC. NUMBER	REV
A3	CS	1310A22155-0-MTRA02	

SHEET 25 OF 61

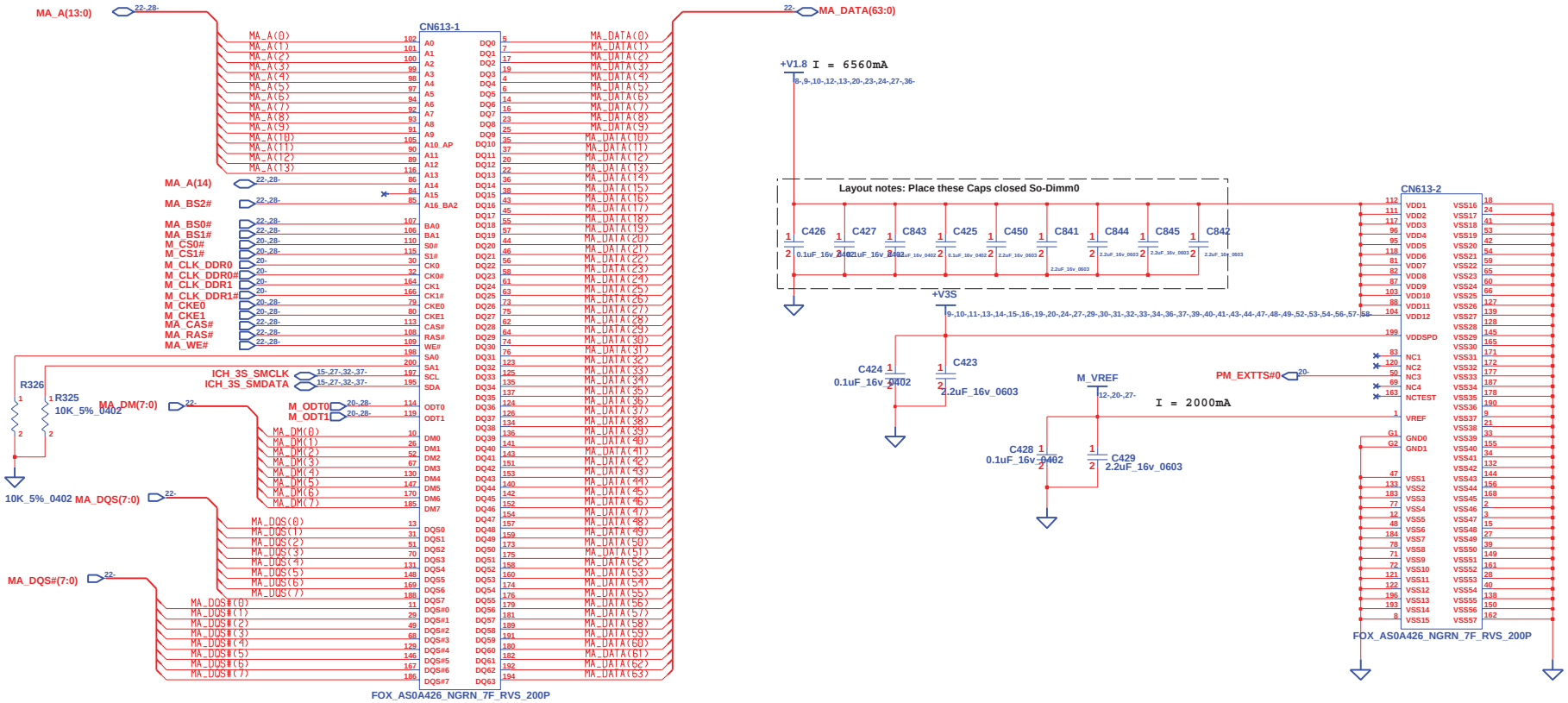

SO DIMM0_11mm

http://hobi-elektronika.net

CHANGE by	Wang, Alan	12-Aug-2008	

INVENTEC

TITLE: DIABLO 2.0
DDR2-DIMM-0

SIZE	CODE	DOC. NUMBER	REV
A3	CS	1310A22155-0-MTRA02	

SHEET 26 OF 61

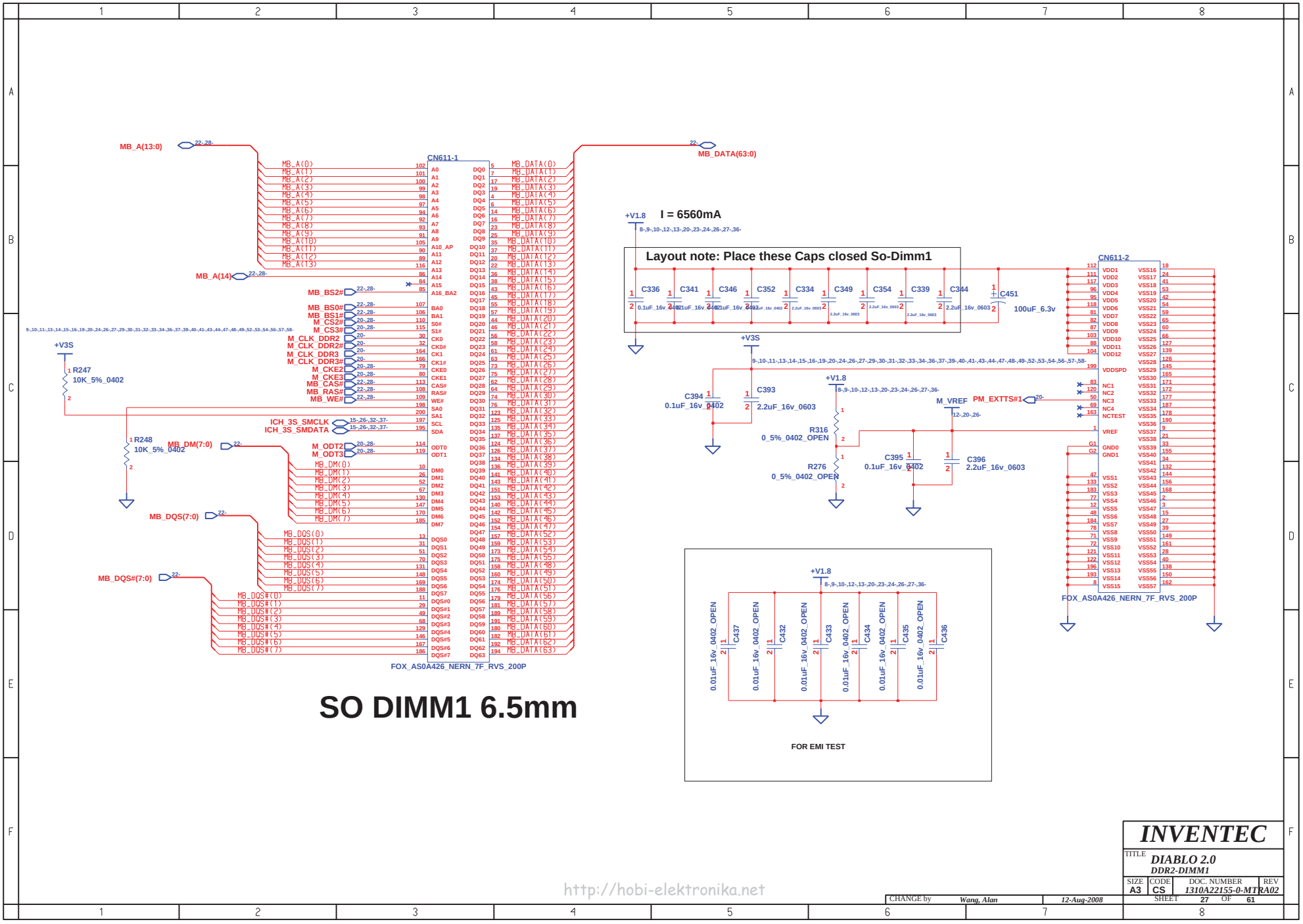

SO DIMM1 6.5mm

http://hobi-elektronika.net

CHANGE by	Wang, Alan	12-Aug-2008	

INVENTEC

TITLE: DIABLO 2.0
DDR2-DIMM1

SIZE	CODE	DOC. NUMBER	REV
A3	CS	1310A22155-0-MTRA02	

SHEET 27 OF 61

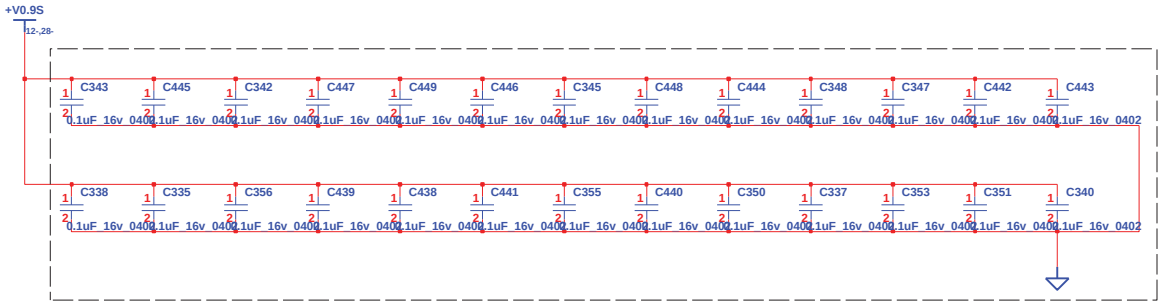

LAYOUT NOTES : PLACE ONE CAP CLOSE TO EVERY 2 PULL UP RESISTOR TERMINATED TO +V0.9S

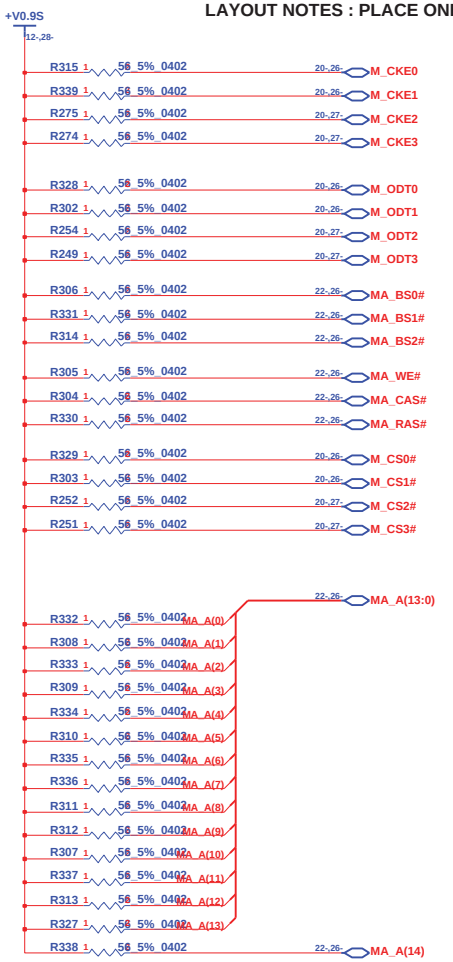

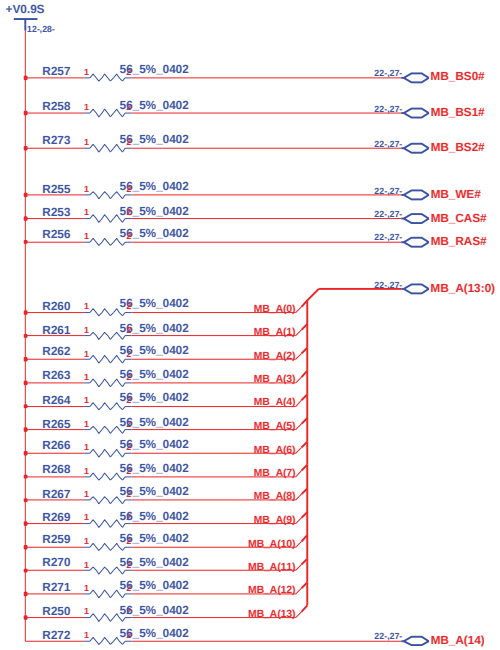

http://hobi-elektronika.net

CHANGE by	Wang, Alan	27-Sep-2003	

INVENTEC

TITLE: **DIABLO 2.0**
DDR2-DAMPING

SIZE	CODE	DOC. NUMBER	REV
A3	CS	1310A22155-0-MTRA02	

SHEET 28 OF 61

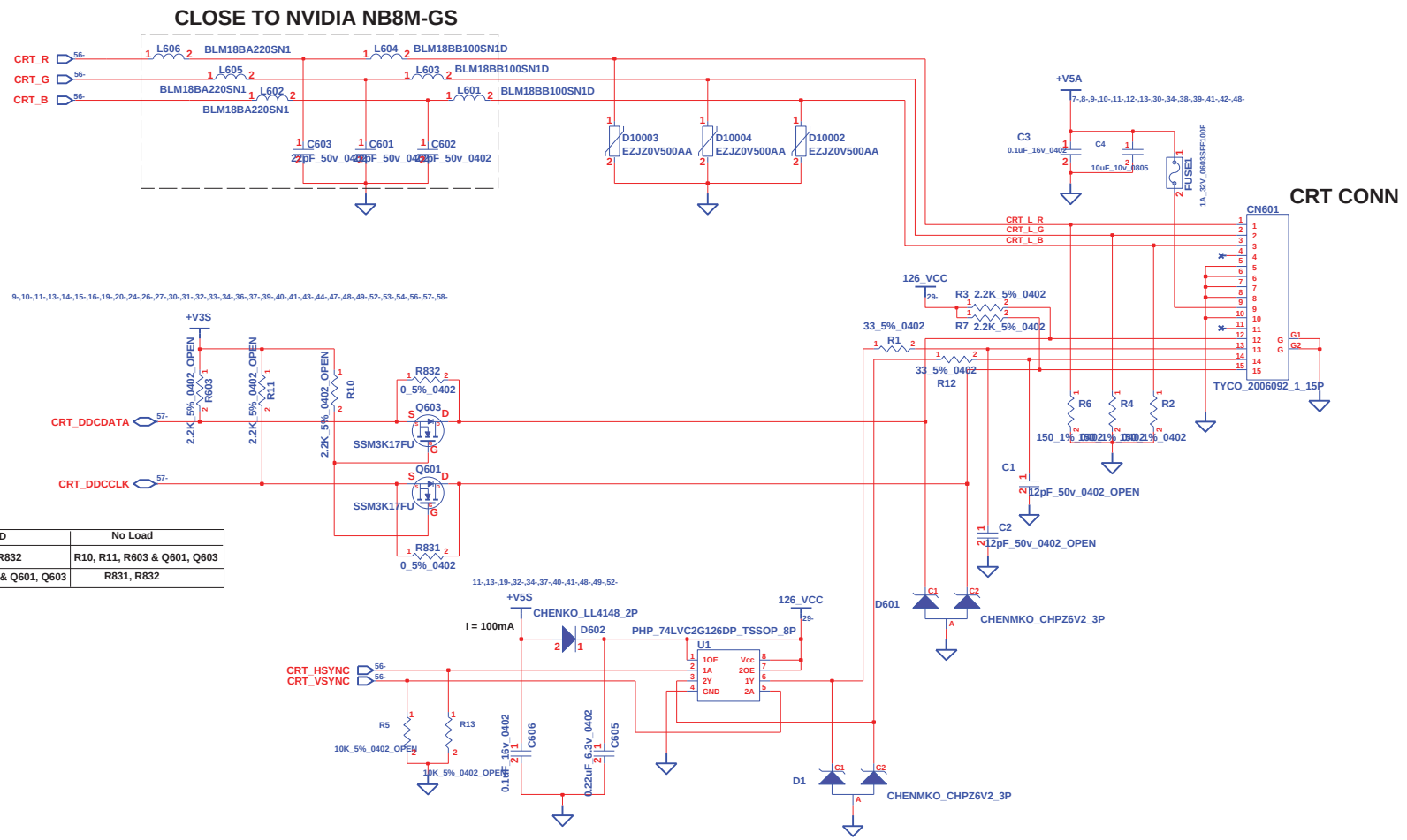

Option	LOAD	No Load
1	R831, R832	R10, R11, R603 & Q601, Q603
2	R10, R11, R603 & Q601, Q603	R831, R832

http://hobi-elektronika.net

INVENTEC

TITLE DIABLO 2.0
VGA CONN

SIZE	CODE	DOC. NUMBER	REV
A3	CS	1310A22155-0-MTRA02	

CHANGE by Wang, Alan 31-Jul-2008

SHEET 29 OF 61

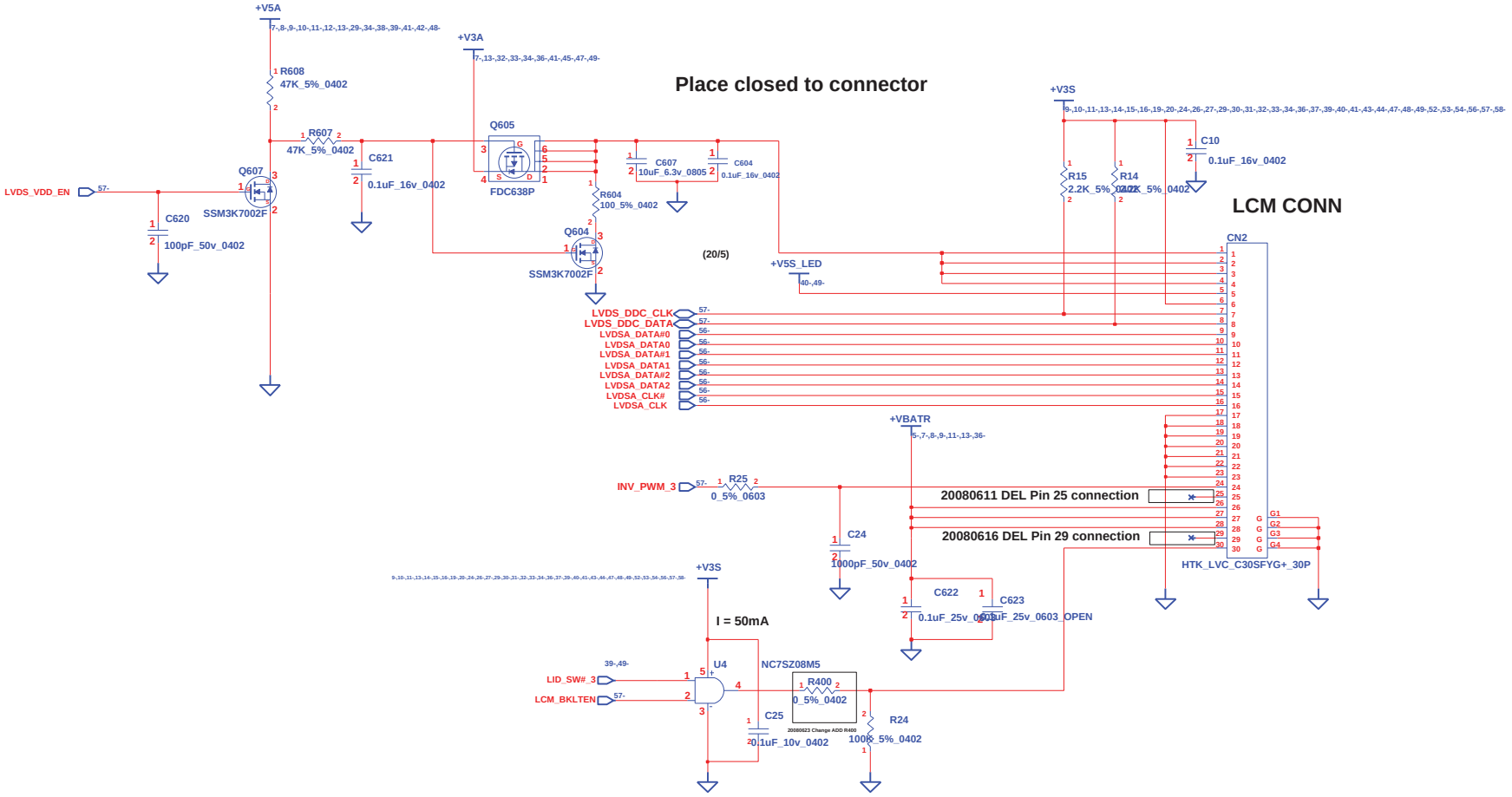

INVENTEC			
TITLE	DIABLO 2.0 LCM CONN		
SIZE A3	CODE CS	DOC. NUMBER 1310A22155-0-MTRA02	REV
CHANGE by Wang, Alan	31-Jul-2008	SHEET 30 OF 61	

http://hobi-elektronika.net

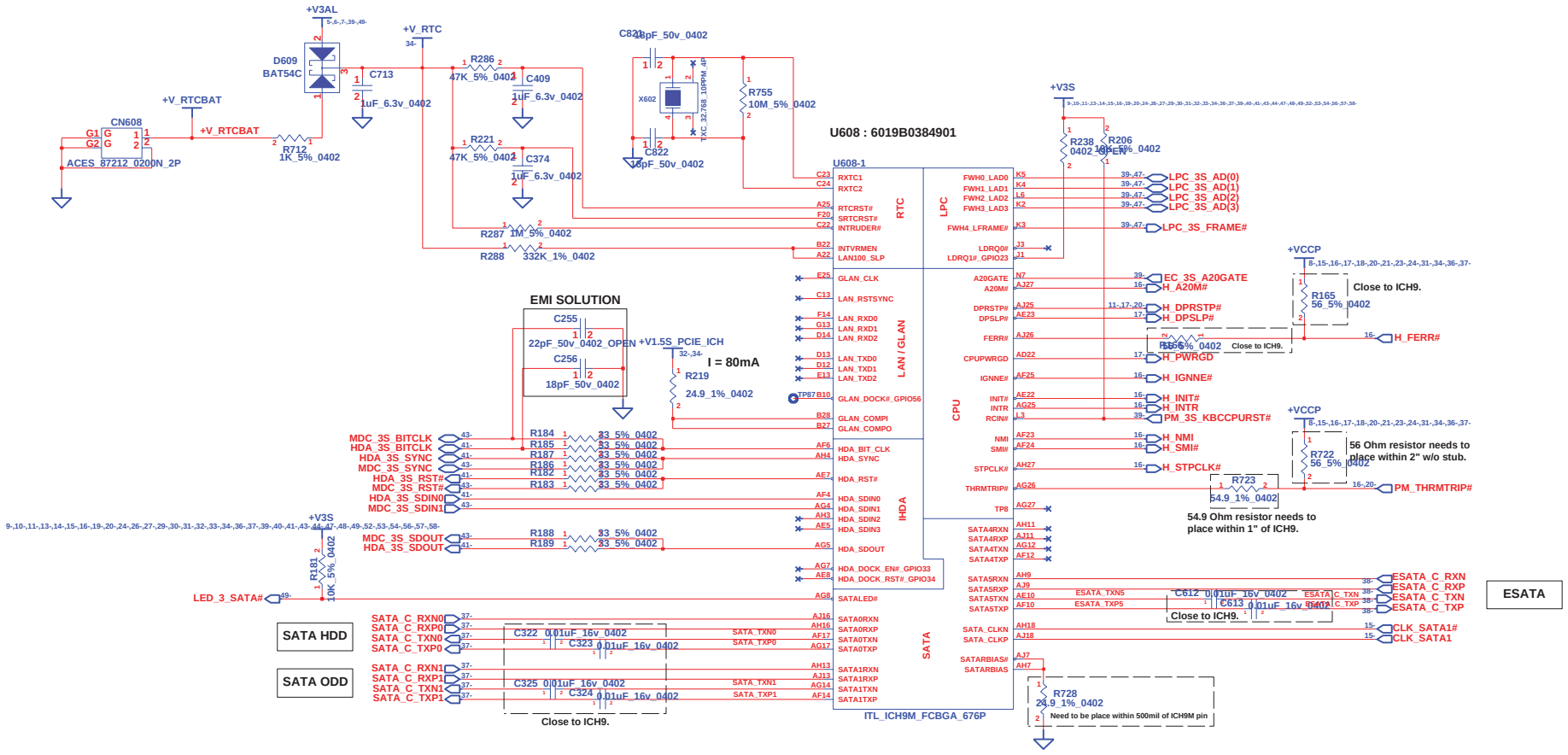

INVENTEC

TITLE: DIABLO 2.0
S/B ICH 9 - 1

SIZE	CODE	DOC. NUMBER	REV
A3	CS	1310A22155-0-MTRA02	

CHANGE by Wang, Alan 31-Jul-2008

SHEET 31 OF 61

http://hobi-elektronika.net

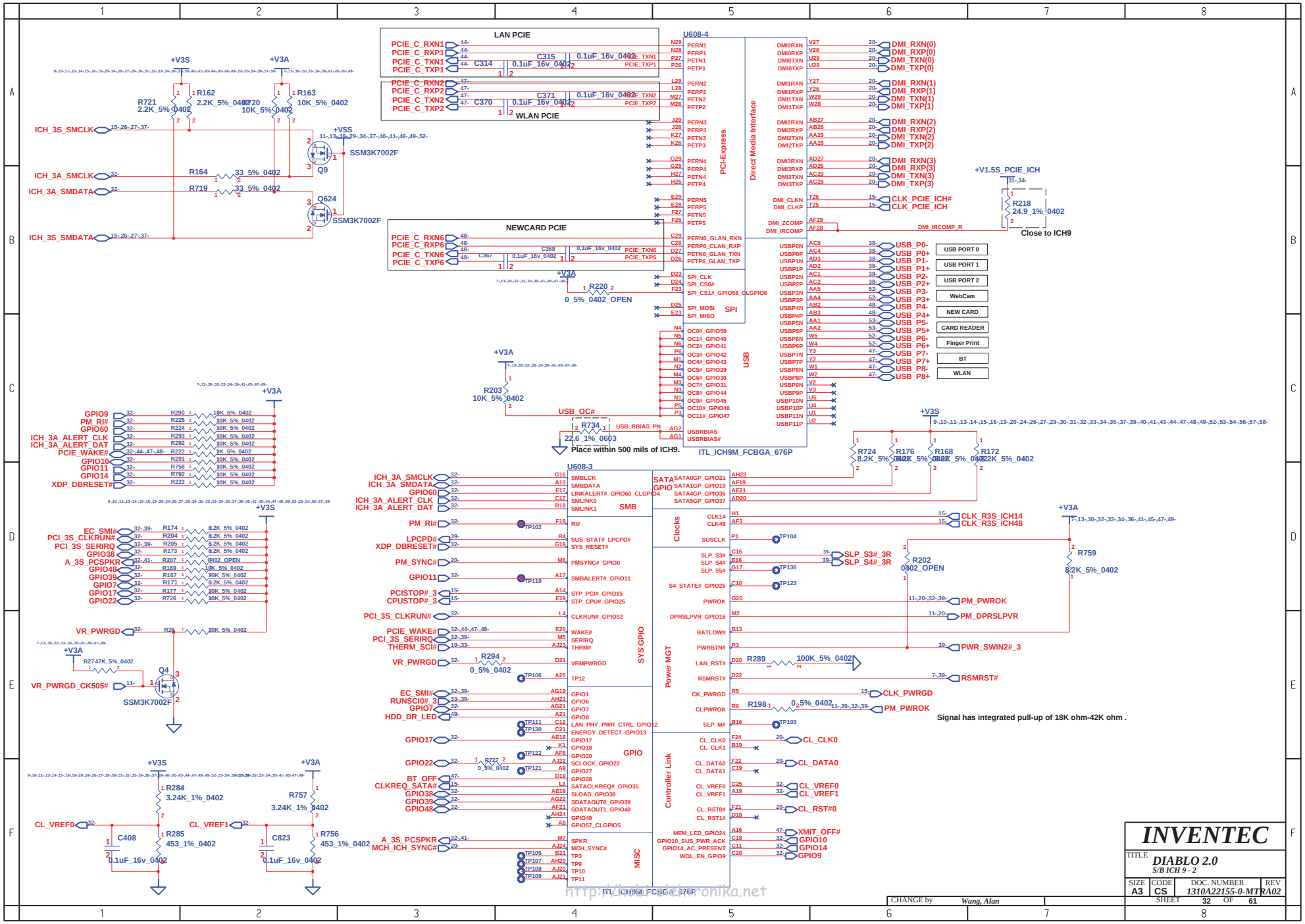
LAN PCIE
WLAN PCIE
NEWCARD PCIE
U608-4
U608-3
PCI-Express
Direct Media Interface
SPI
USB
SMB
SYS GPIO
GPIO
MISC
SATA GPIO
Clocks
Power MGT
Controller Link
ITL_ICH9M_FCBGA_676P
USB PORT 0
USB PORT 1
USB PORT 2
WebCam
NEW CARD
CARD READER
Finger Print
BT
WLAN
Close to ICH9
Place within 500 mils of ICH9.
Signal has integrated pull-up of 18K ohm-42K ohm .
INVENTEC
DIABLO 2.0
S/B ICH 9 - 2
SIZE A3
CODE CS
DOC. NUMBER 1310A22155-0-MTRA02
REV
SHEET 32 OF 61
CHANGE by Wang, Alan
http://www.elektronika.net

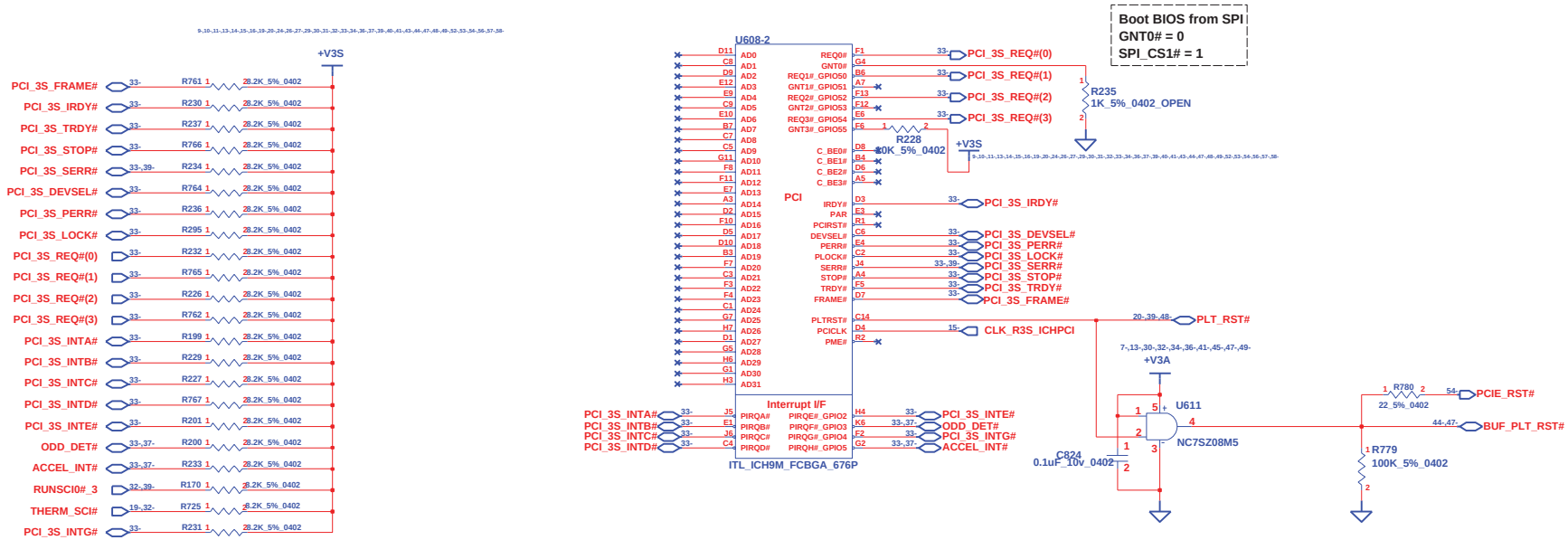

CHANGE by	Wang, Alan	31-Jul-2008	

INVENTEC

TITLE: DIABLO 2.0
S/B ICH9-3

SIZE	CODE	DOC. NUMBER	REV
A3	CS	1310A22155-0-MTRA02	

SHEET 33 OF 61

http://hobi-elektronika.net

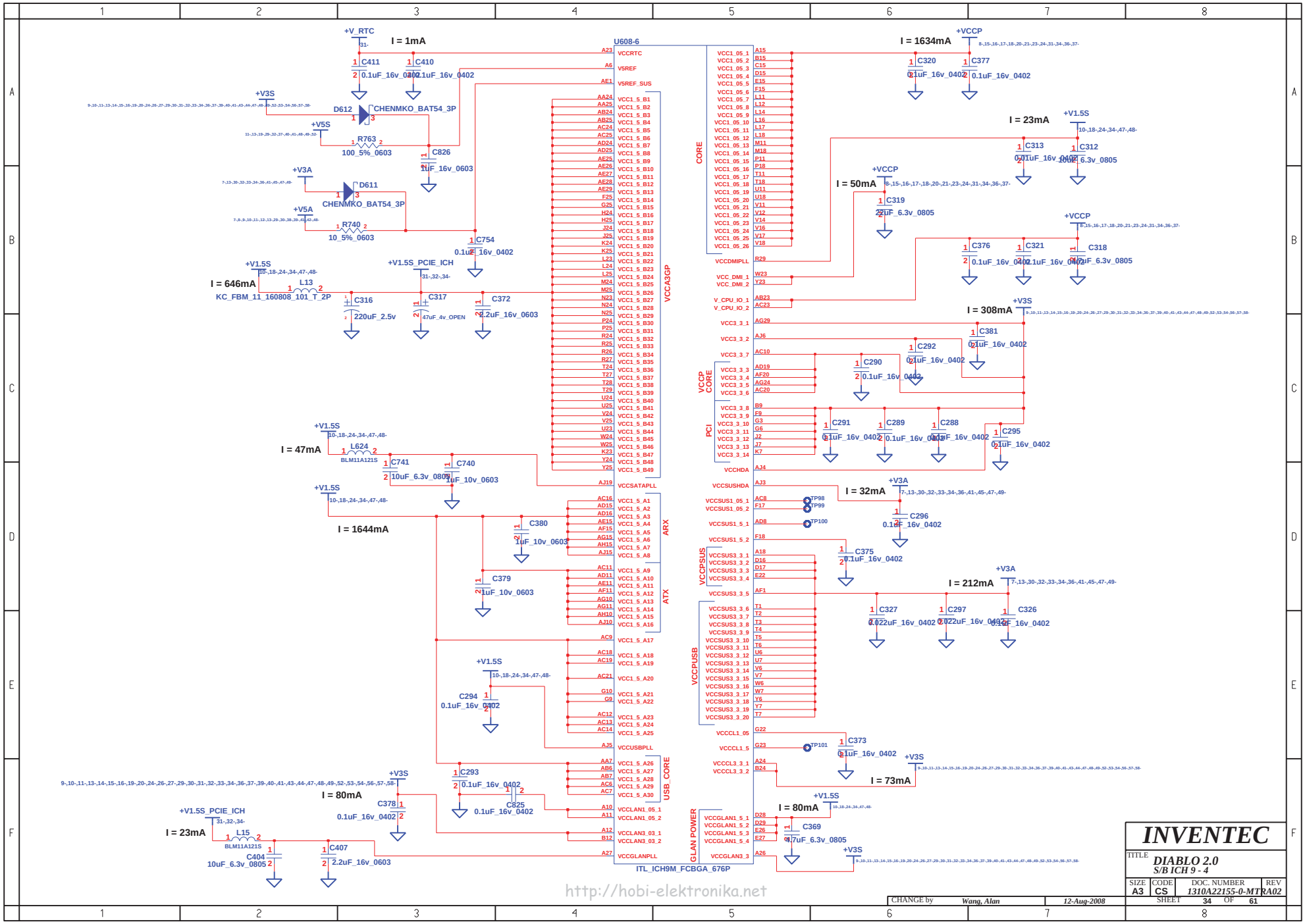

http://hobi-elektronika.net

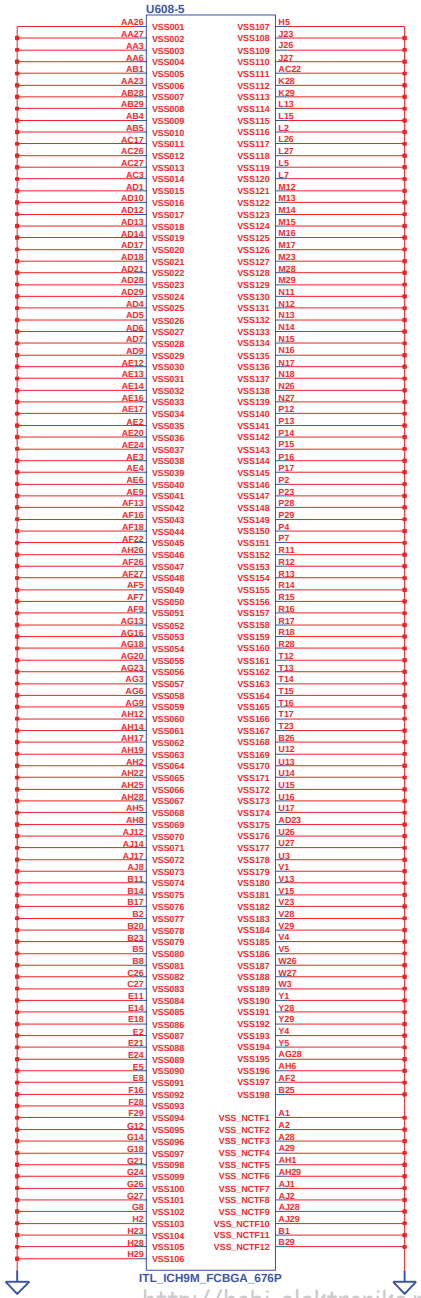

http://hobi-elektronika.net

CHANGE by	Wang, Alan	31-Jul-2008	

INVENTEC

TITLE: *DIABLO 2.0*
S/B ICH9 - 5

SIZE	CODE	DOC. NUMBER	REV
A3	CS	1310A22155-0-MTRA02	

SHEET 35 OF 61

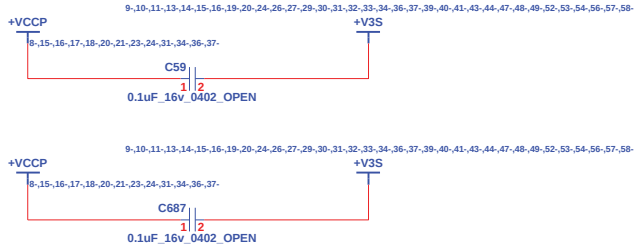

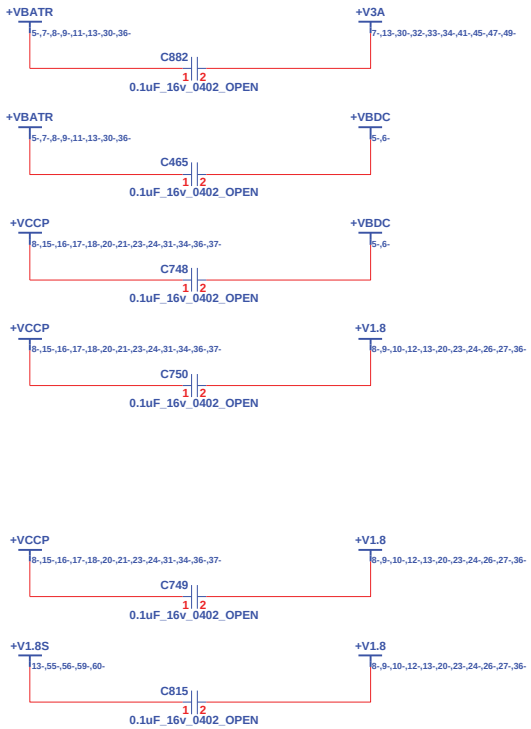

http://hobi-elektronika.net

CHANGE by	Wang, Alan	31-Jul-2008

INVENTEC

TITLE *DIABLO 2.0*
SYSTEM BIOS&ODD EXT/B

SIZE	CODE	DOC. NUMBER	REV
A3	CS	1310A22155-0-MTRA02	

SHEET 36 OF 61

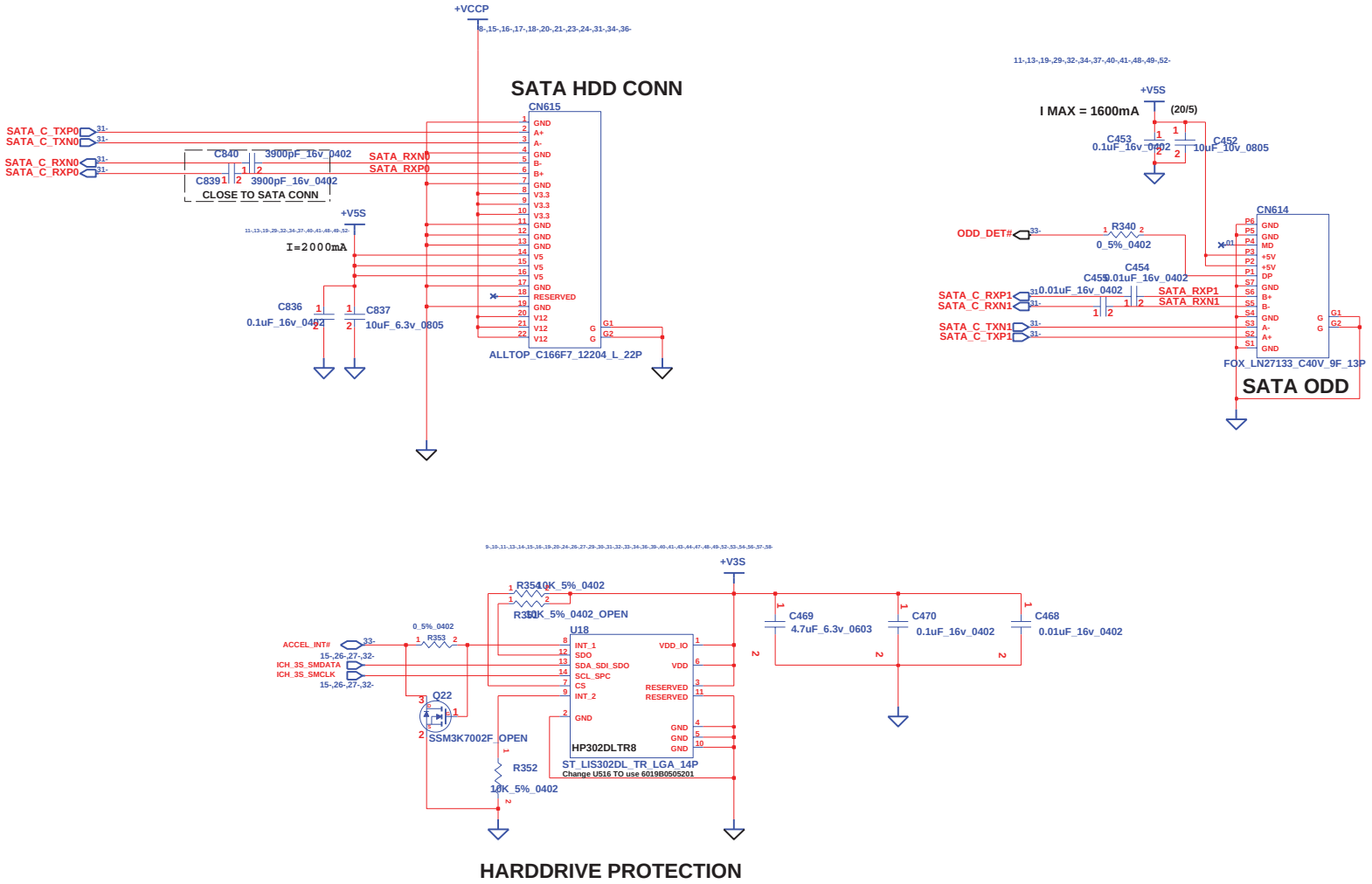

http://hobi-elektronika.net

INVENTEC			
TITLE	DIABLO 2.0 HDD & ODD CONN & Accelerometer		
SIZE A3	CODE CS	DOC. NUMBER 1310A22155-0-MTRA02	REV
CHANGE by Wang, Alan	31-Jul-2008	SHEET 37 OF 61	

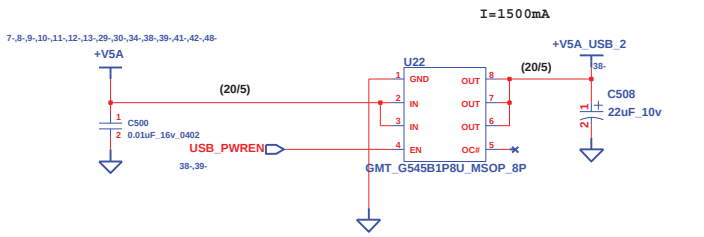

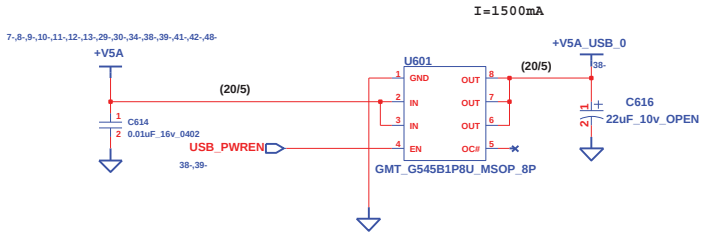

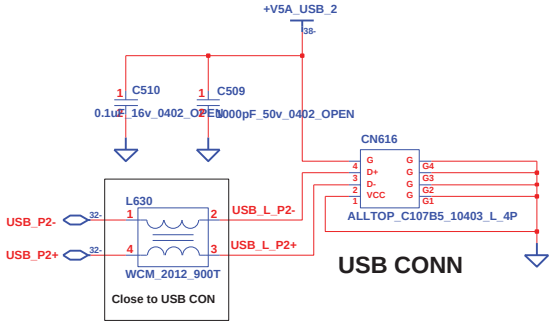

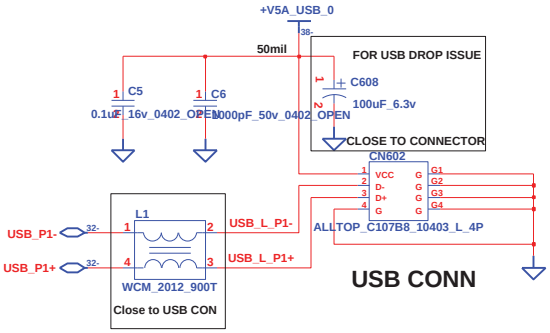

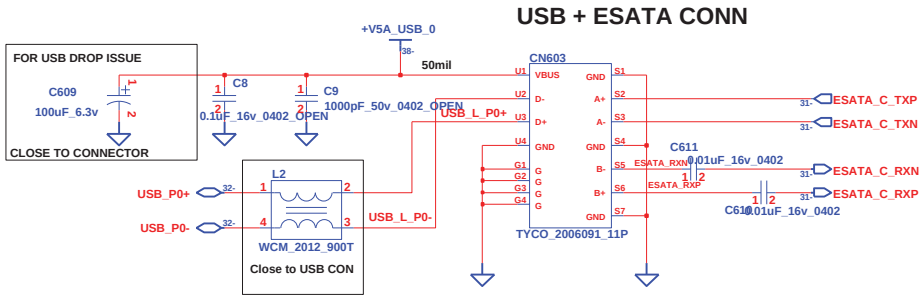

http://hobi-elektronika.net

CHANGE by	Wang, Alan	31-Jul-2008	

INVENTEC

TITLE: *DIABLO 2.0*
USB CONN

SIZE	CODE	DOC. NUMBER	REV
A3	CS	1310A22155-0-MTRA02	

SHEET 38 OF 61

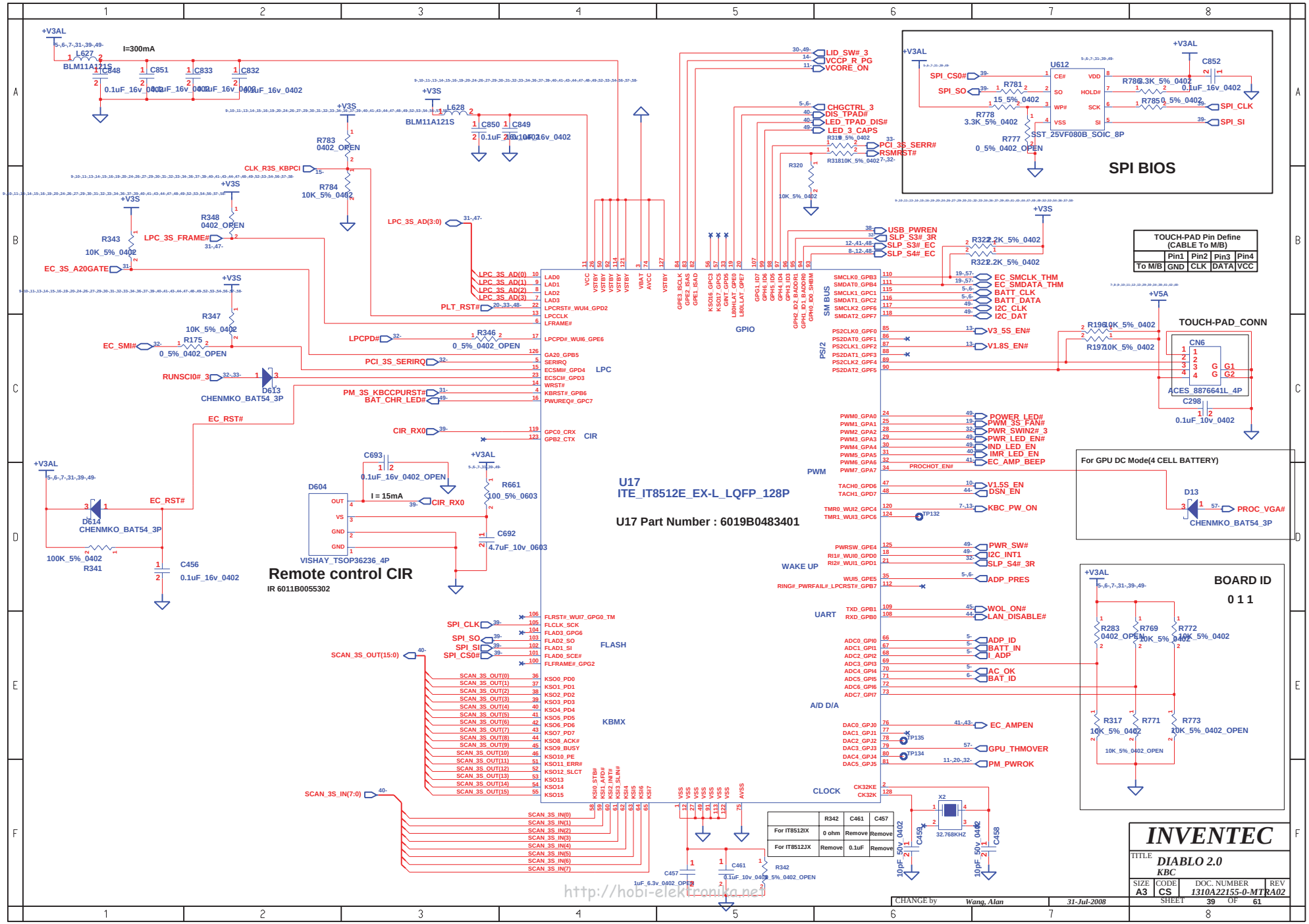
U17
ITE_IT8512E_EX-L_LQFP_128P
U17 Part Number : 6019B0483401
SPI BIOS
U612
SST_25VF080B_SOIC_8P
Remote control CIR
IR 6011B0055302
VISHAY_TSOP36236_4P
TOUCH-PAD_CONN
CN6
ACES_8876641L_4P
TOUCH-PAD Pin Define (CABLE To M/B)
For GPU DC Mode(4 CELL BATTERY)
BOARD ID
0 1 1
INVENTEC
DIABLO 2.0
KBC
1310A22155-0-MTRA02
http://hobi-elektronika.net

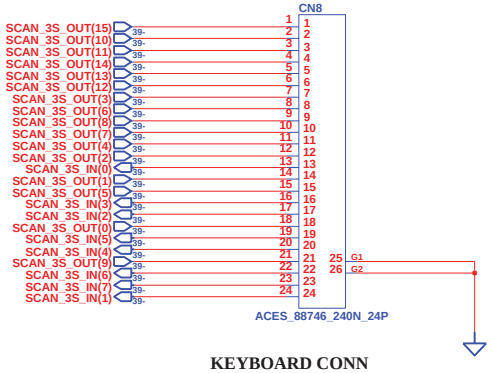

KEYBOARD CONN

TOUCHPAD LED CONN

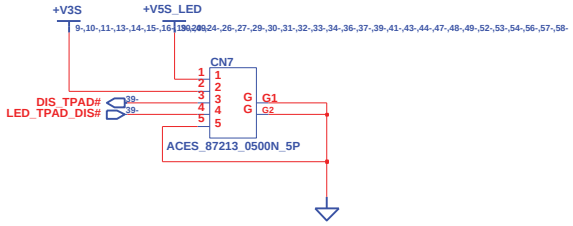

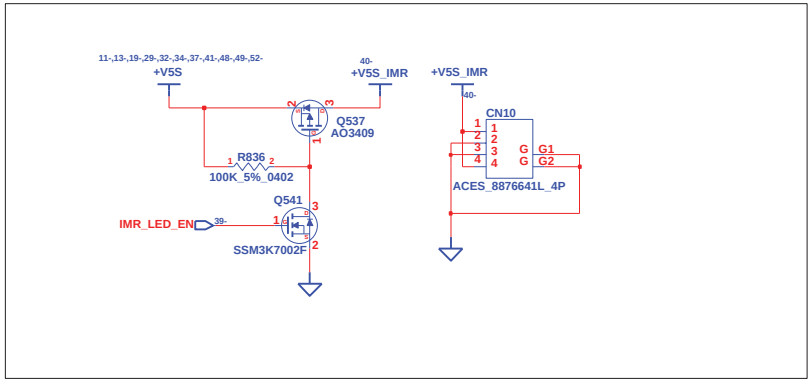

http://hobi-elektronika.net

CHANGE by	Wang, Alan	31-Jul-2008	

INVENTEC

TITLE: *DIABLO 2.0*
KB & TP CONN

SIZE	CODE	DOC. NUMBER	REV
A3	CS	1310A22155-0-MTRA02	

SHEET 40 OF 61

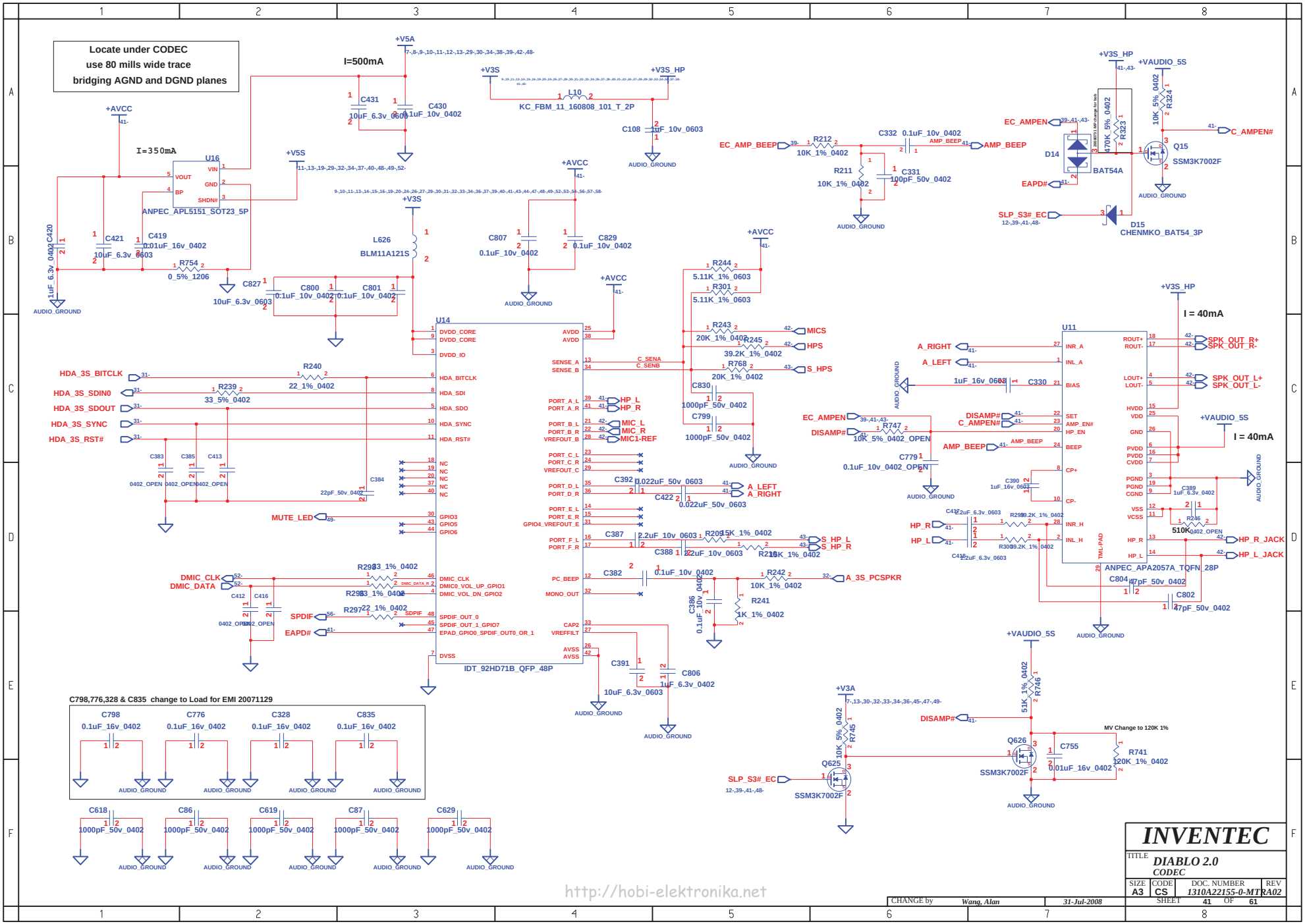
Locate under CODEC
use 80 mills wide trace
bridging AGND and DGND planes
I=500mA
I=350mA
U16
ANPEC_APL5151_SOT23_5P
U14
IDT_92HD71B_QFP_48P
U11
ANPEC_APA2057A_TQFN_28P
I = 40mA
C798,776,328 & C835 change to Load for EMI 20071129
C798 0.1uF_16v_0402
C776 0.1uF_16v_0402
C328 0.1uF_16v_0402
C835 0.1uF_16v_0402
C618 1000pF_50v_0402
C86 1000pF_50v_0402
C619 1000pF_50v_0402
C87 1000pF_50v_0402
C629 1000pF_50v_0402
AUDIO_GROUND
MV Change to 120K 1%
INVENTEC
TITLE DIABLO 2.0
CODEC
SIZE A3
CODE CS
DOC. NUMBER 1310A22155-0-MTRA02
REV
SHEET 41 OF 61
CHANGE by Wang, Alan
31-Jul-2008
http://hobi-elektronika.net

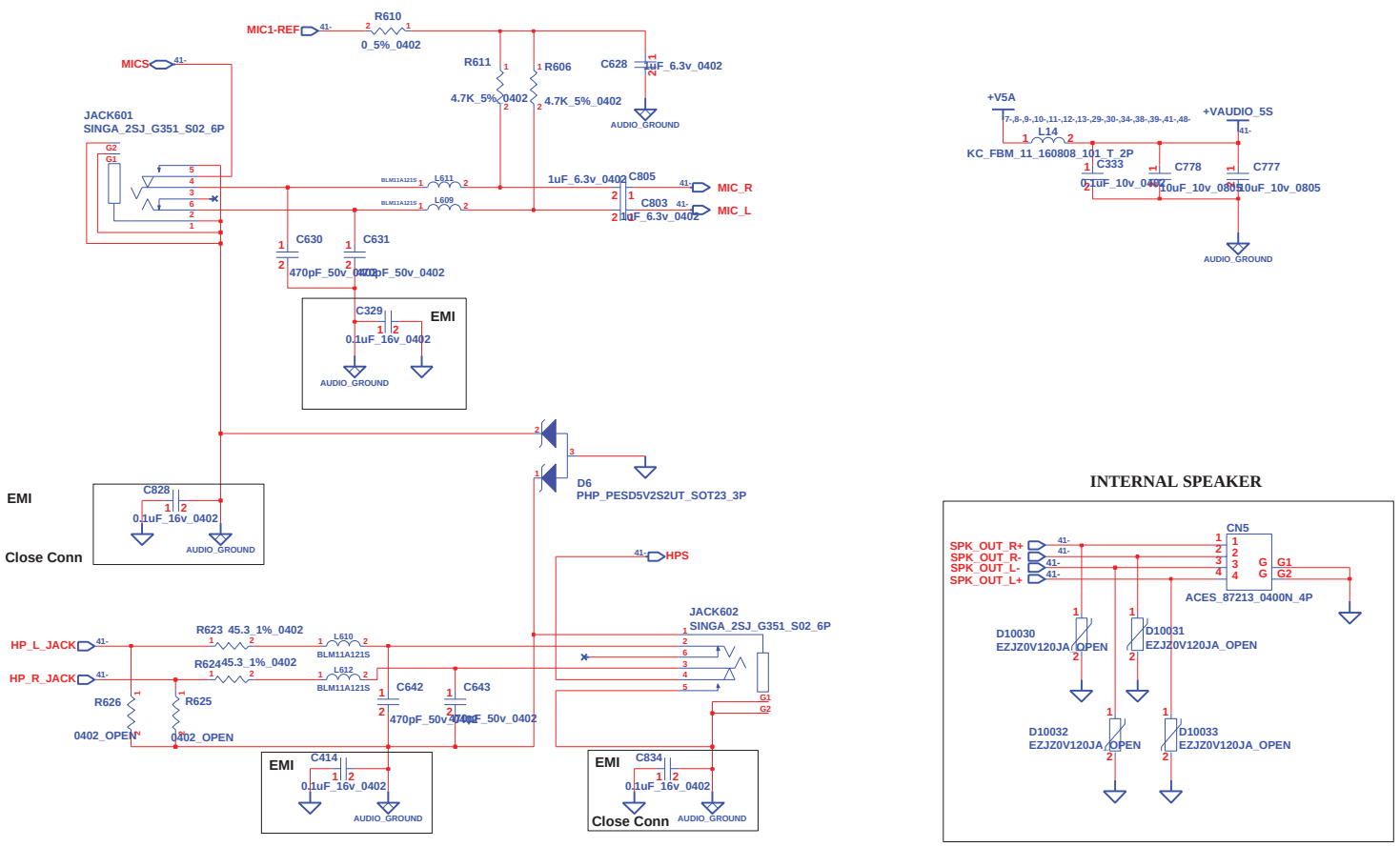

INTERNAL SPEAKER

http://hobi-elektronika.net

CHANGE by	Wang, Alan	31-Jul-2008	

INVENTEC

TITLE: *DIABLO 2.0*
AMP & MIC & HP

SIZE	CODE	DOC. NUMBER	REV
A3	CS	1310A22155-0-MTRA02	

SHEET 42 OF 61

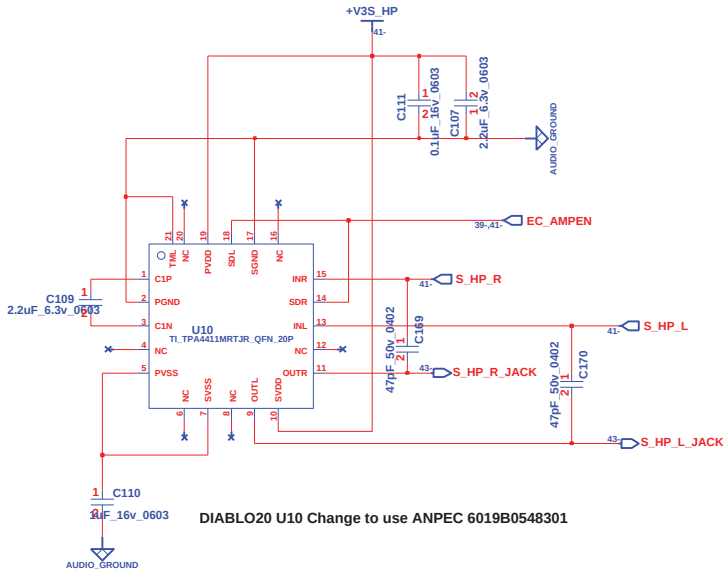

DIABLO20 U10 Change to use ANPEC 6019B0548301

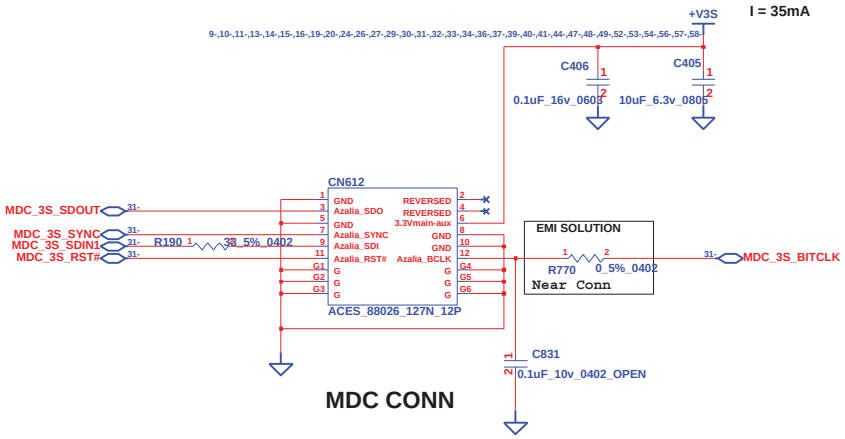

MDC CONN

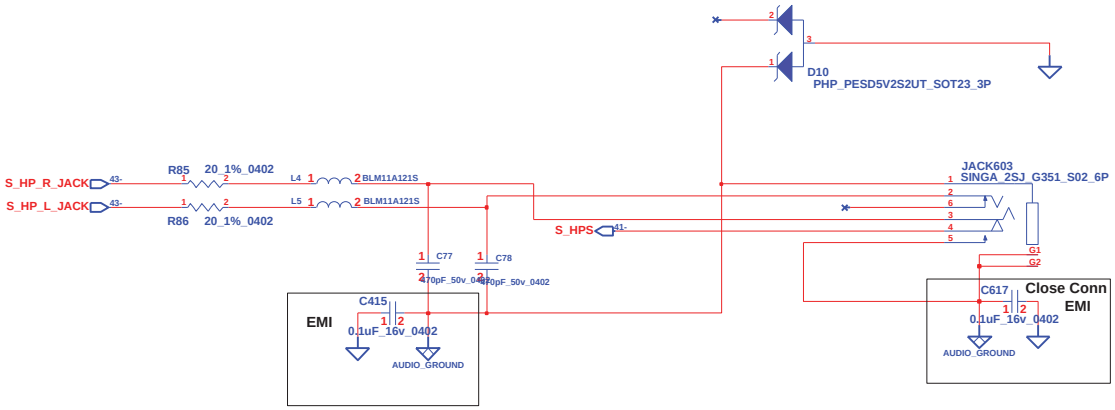

http://hobi-elektronika.net

CHANGE by	Wang, Alan	31-Jul-2008	

INVENTEC

TITLE DIABLO 2.0

SIZE	CODE	DOC. NUMBER	REV
A3	CS	1310A22155-0-MTRA02	

SHEET 43 OF 61

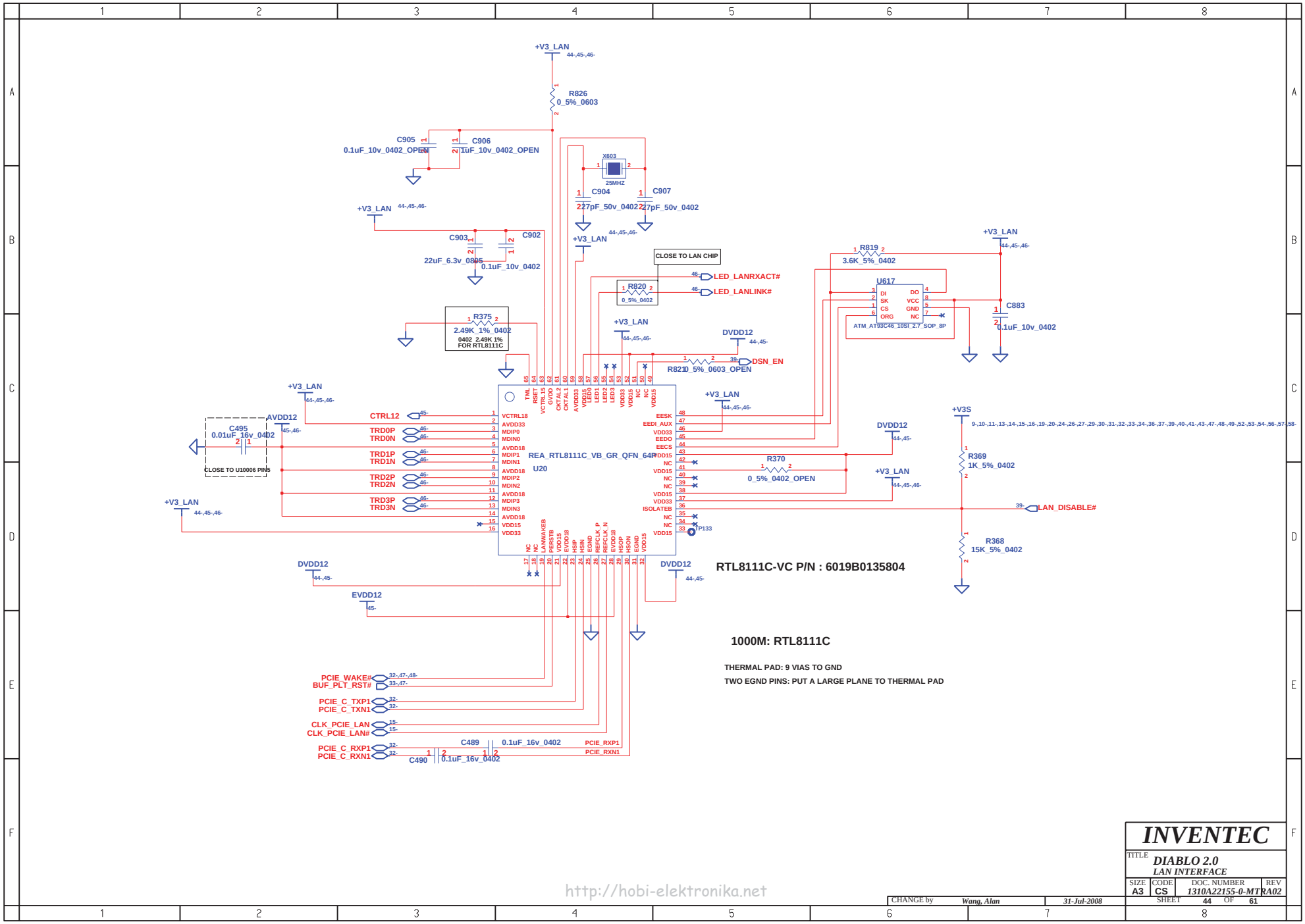
+V3_LAN
R826
0_5%_0603
C905
0.1uF_10v_0402_OPEN
C906
1uF_10v_0402_OPEN
X603
25MHZ
C904
27pF_50v_0402
C907
27pF_50v_0402
C903
22uF_6.3v_0805
C902
0.1uF_10v_0402
CLOSE TO LAN CHIP
R820
0_5%_0402
LED_LANRXACT#
LED_LANLINK#
R819
3.6K_5%_0402
U617
DI
SK
CS
ORG
DO
VCC
GND
NC
ATM_AT93C46_10SI_2.7_SOP_8P
C883
0.1uF_10v_0402
R375
2.49K_1%_0402
0402 2.49K 1%
FOR RTL8111C
DVDD12
DSN_EN
R821
0_5%_0603_OPEN
AVDD12
C495
0.01uF_16v_0402
CLOSE TO U10006 PIN5
CTRL12
TRD0P
TRD0N
TRD1P
TRD1N
TRD2P
TRD2N
TRD3P
TRD3N
REA_RTL8111C_VB_GR_QFN_64P
U20
R370
0_5%_0402_OPEN
+V3S
R369
1K_5%_0402
R368
15K_5%_0402
LAN_DISABLE#
TP133
EVDD12
PCIE_WAKE#
BUF_PLT_RST#
PCIE_C_TXP1
PCIE_C_TXN1
CLK_PCIE_LAN
CLK_PCIE_LAN#
PCIE_C_RXP1
PCIE_C_RXN1
C489
0.1uF_16v_0402
C490
0.1uF_16v_0402
PCIE_RXP1
PCIE_RXN1
RTL8111C-VC P/N : 6019B0135804
1000M: RTL8111C
THERMAL PAD: 9 VIAS TO GND
TWO EGND PINS: PUT A LARGE PLANE TO THERMAL PAD
INVENTEC
TITLE
DIABLO 2.0
LAN INTERFACE
SIZE A3
CODE CS
DOC. NUMBER 1310A22155-0-MTRA02
REV
CHANGE by Wang, Alan
31-Jul-2008
SHEET 44 OF 61
http://hobi-elektronika.net

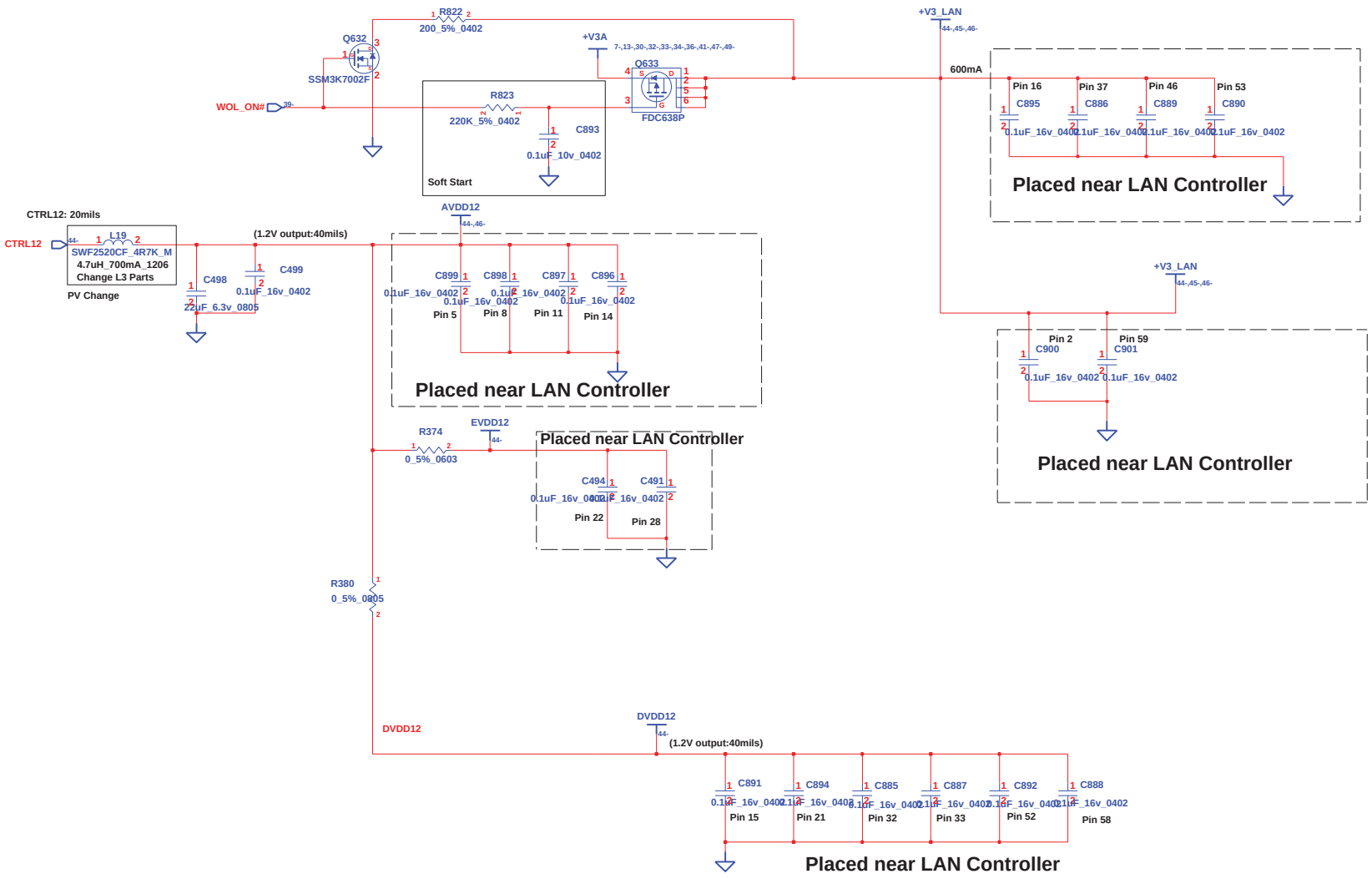

http://hobi-elektronika.net

CHANGE by	Wang, Alan	31-Jul-2008	

INVENTEC

TITLE: *DIABLO 2.0*
LAN POWER

SIZE	CODE	DOC. NUMBER	REV
A3	CS	1310A22155-0-MTRA02	

SHEET 45 OF 61

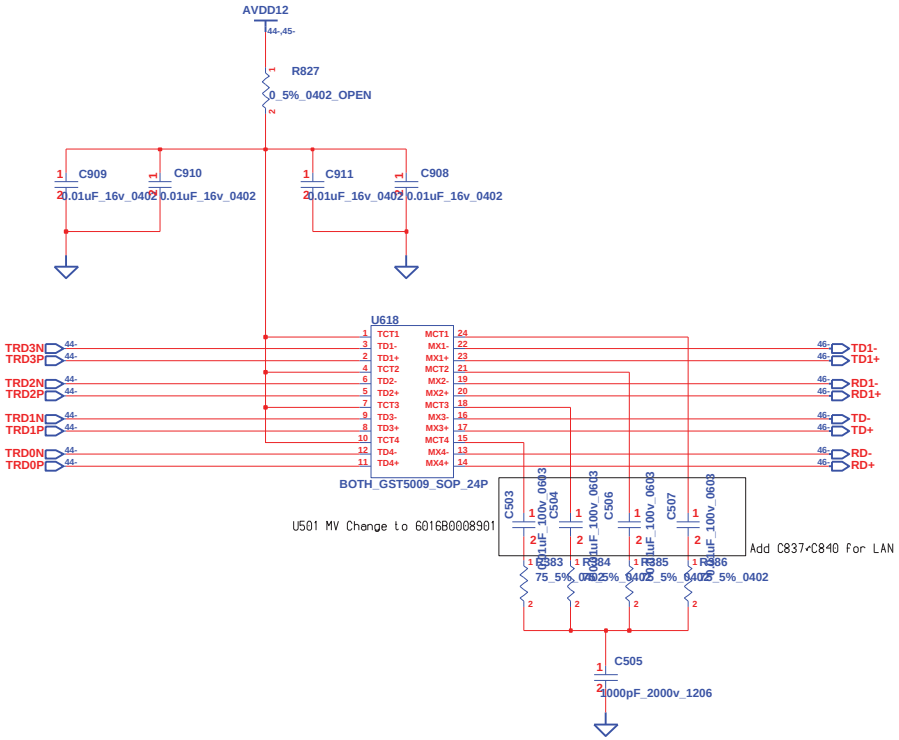

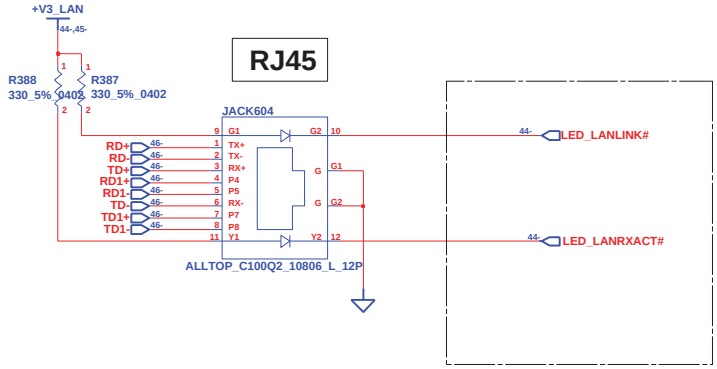

LAYOUT NOTE : Place termination resistors and caps as close to LAN controller as possible

http://hobi-elektronika.net

INVENTEC			
TITLE DIABLO 2.0 LAN RJ45 CONN			
SIZE A3	CODE CS	DOC. NUMBER 1310A22155-0-MTRA02	REV
CHANGE by Wang, Alan	31-Jul-2008	SHEET 46 OF 61	

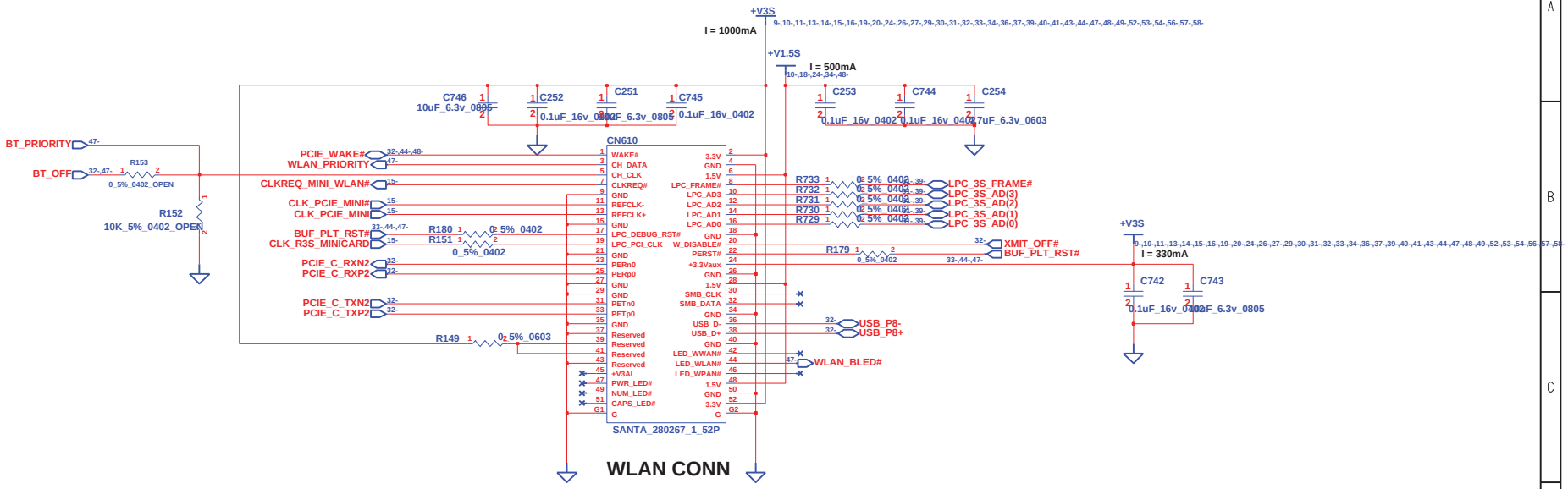

WLAN CONN

R729,R730,R731,R732,R733 place as close to LPC signal as possible to minimize stub length for LPC bus (will be NI for FCS)

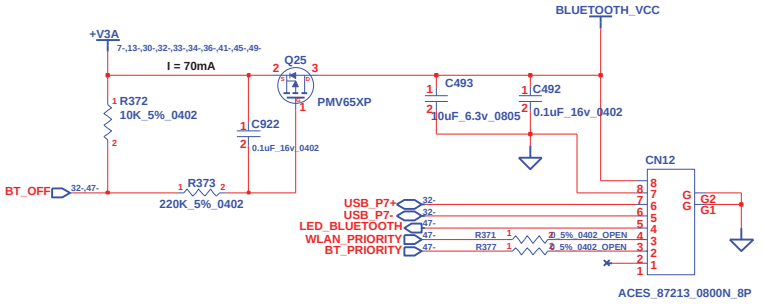

BLUETOOTH CONN

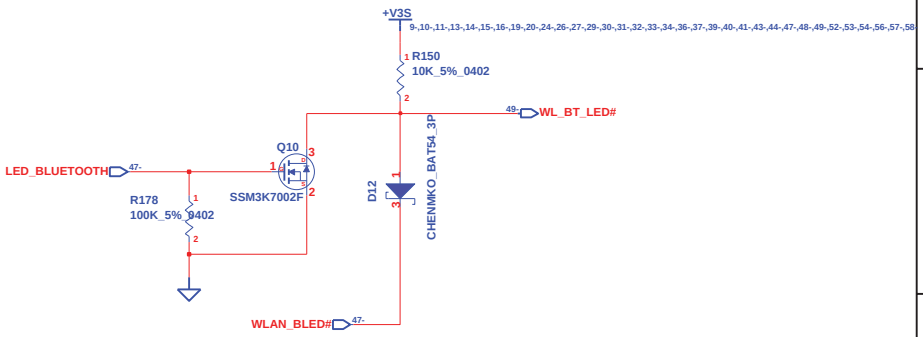

http://hobi-elektronika.net

INVENTEC			
TITLE: DIABLO 2.0 MINICARD CONN			
SIZE A3	CODE CS	DOC. NUMBER 1310A22155-0-MTRA02	REV
CHANGE by Wang, Alan	31-Jul-2008	SHEET 47 OF 61	

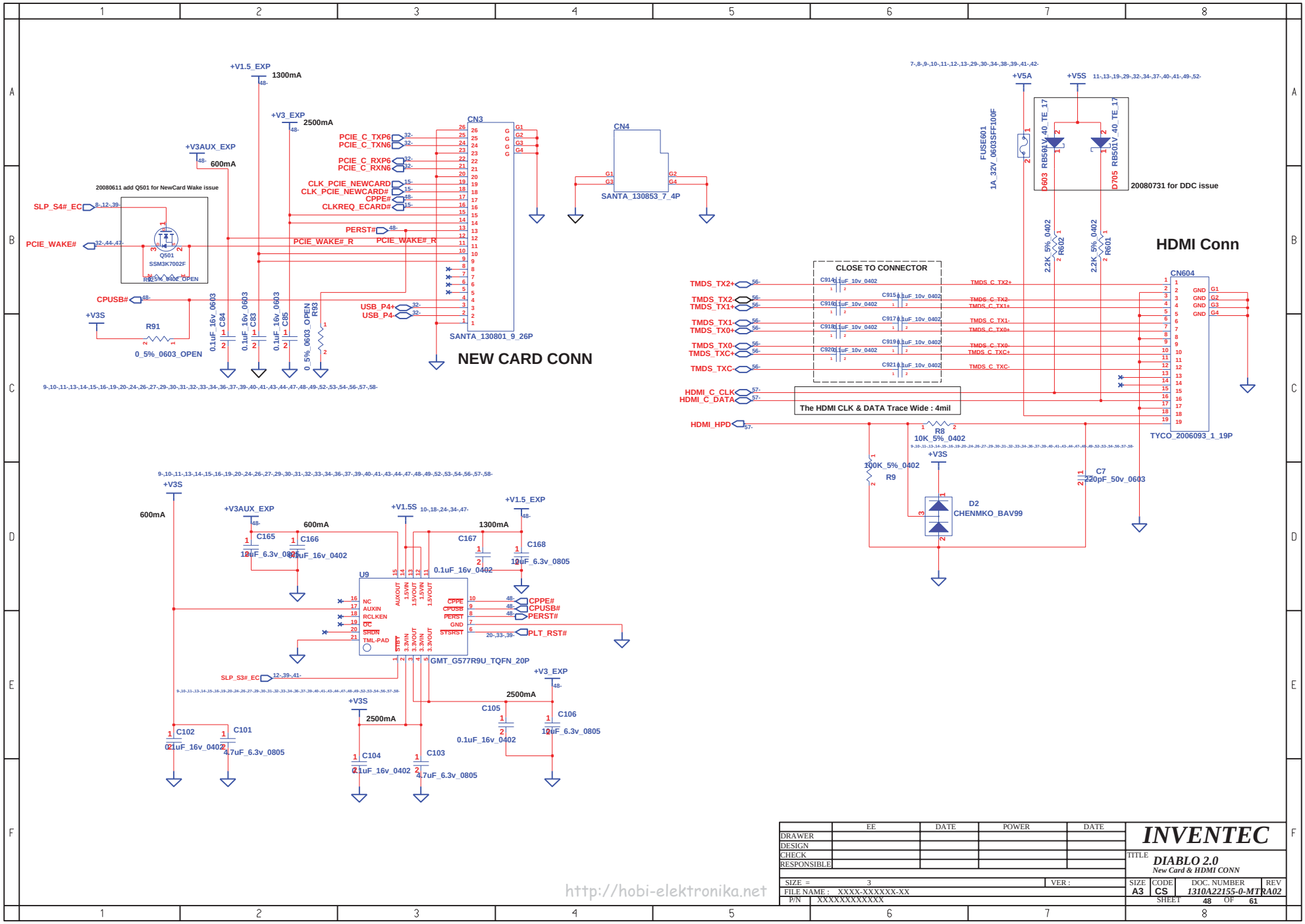

	EE	DATE	POWER	DATE
DRAWER				
DESIGN				
CHECK				
RESPONSIBLE				

SIZE = 3 VER :

FILE NAME : XXXX-XXXXXX-XX

P/N XXXXXXXXXXXX

INVENTEC

TITLE **DIABLO 2.0**
New Card & HDMI CONN

SIZE	CODE	DOC. NUMBER	REV
A3	CS	1310A22155-0-MTRA02	

SHEET 48 OF 61

LED P/N: 6011B0072901

BATTERY-CHARGE LED

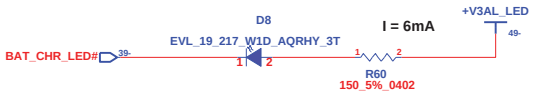

LID SWITCH

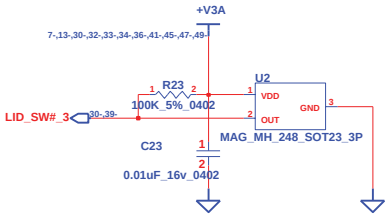

POWER LED

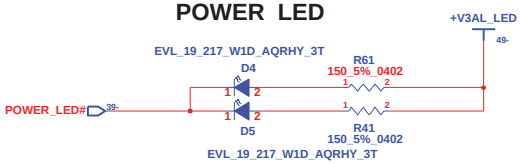

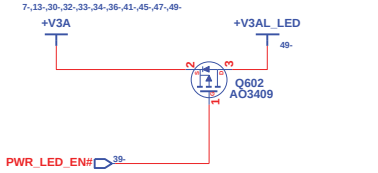

To INDICATOR Board

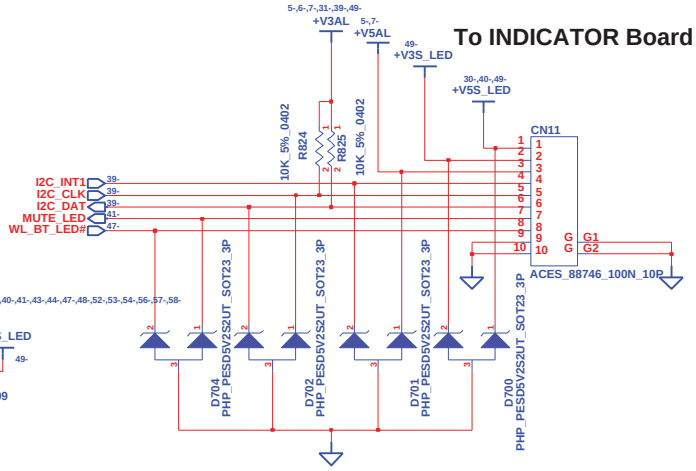

20080731 change to ESD Diode

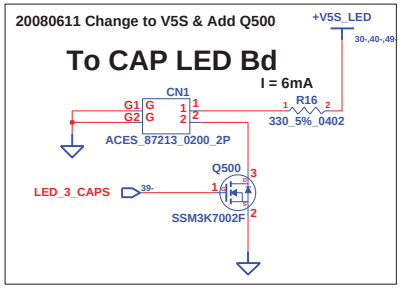

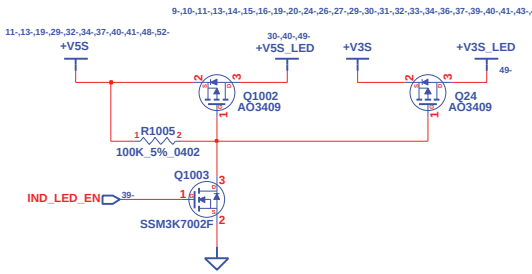

SATA LED & HDD-HALTED LED

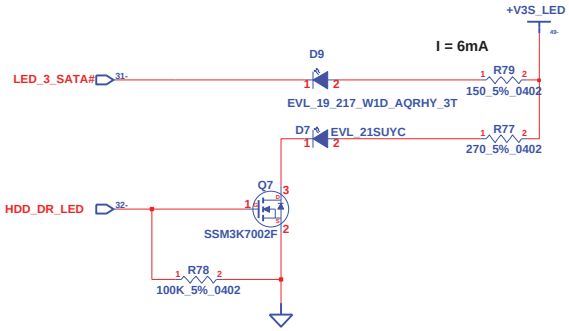

SW1 SI USE : 6026B0154801

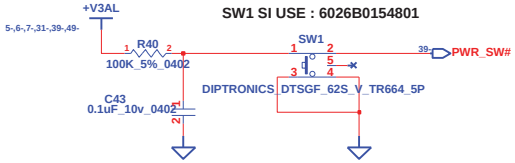

POWER BUTTON

http://hobi-elektronika.net

INVENTEC			
TITLE: DIABLO 2.0 BUTTON & LED			
SIZE A3	CODE CS	DOC. NUMBER 1310A22155-0-MTRA02	REV
CHANGE by Wang, Alan	31-Jul-2008	SHEET 49 OF 61	

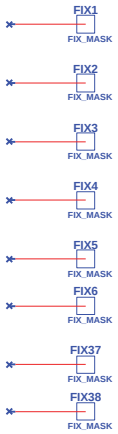

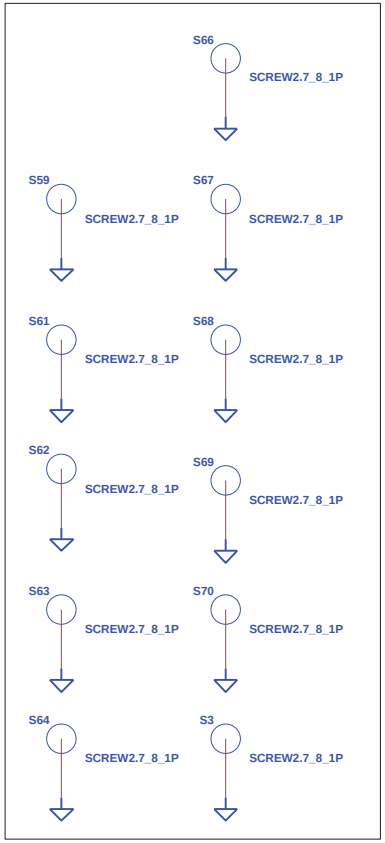

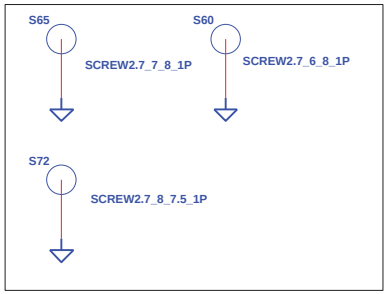

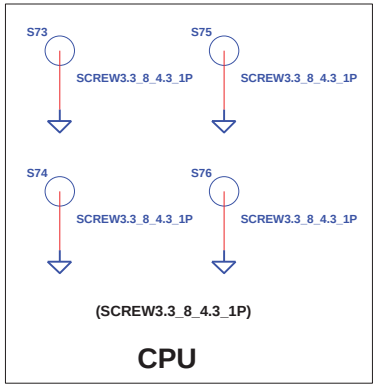

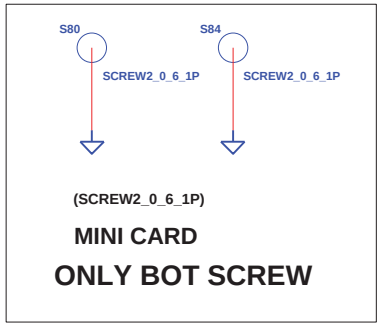

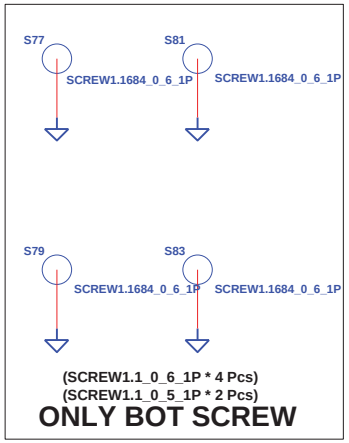

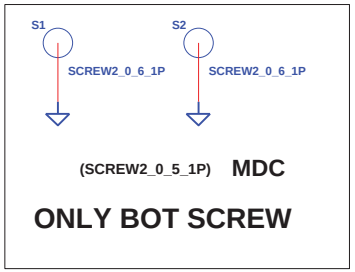

http://hobi-elektronika.net

CHANGE by	Wang, Alan	31-Jul-2008	

INVENTEC

TITLE *DIABLO 2.0*
SCREW

SIZE	CODE	DOC. NUMBER	REV
A3	CS	1310A22155-0-MTRA02	

SHEET 50 OF 61

TOUCHPAD-DISABLE BUTTOM_DB

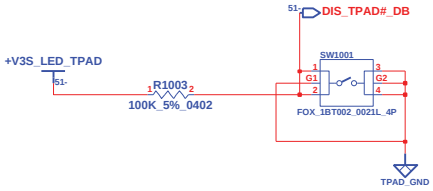

TOUCHPAD ACTIVE LED

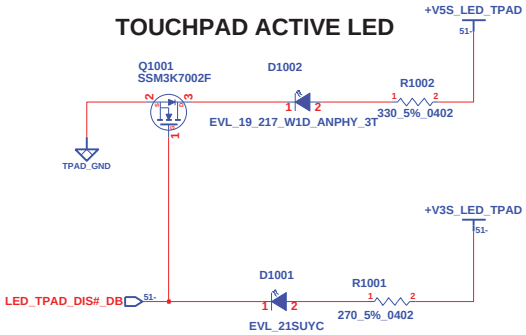

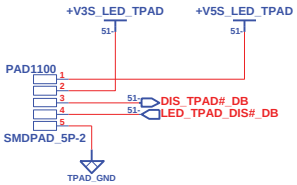

TouchPad Disable DB

http://hobi-elektronika.net

CHANGE by	Wang, Alan	31-Jul-2008	

INVENTEC

TITLE: DIABLO 2.0
FINGER PRINTER CONN.

SIZE	CODE	DOC. NUMBER	REV
A3	CS	1310A22192-0-MTRA02	

SHEET 51 OF 61

To Finger Print Reader Board

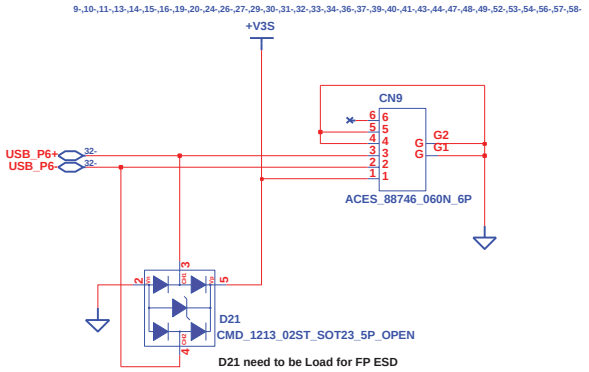

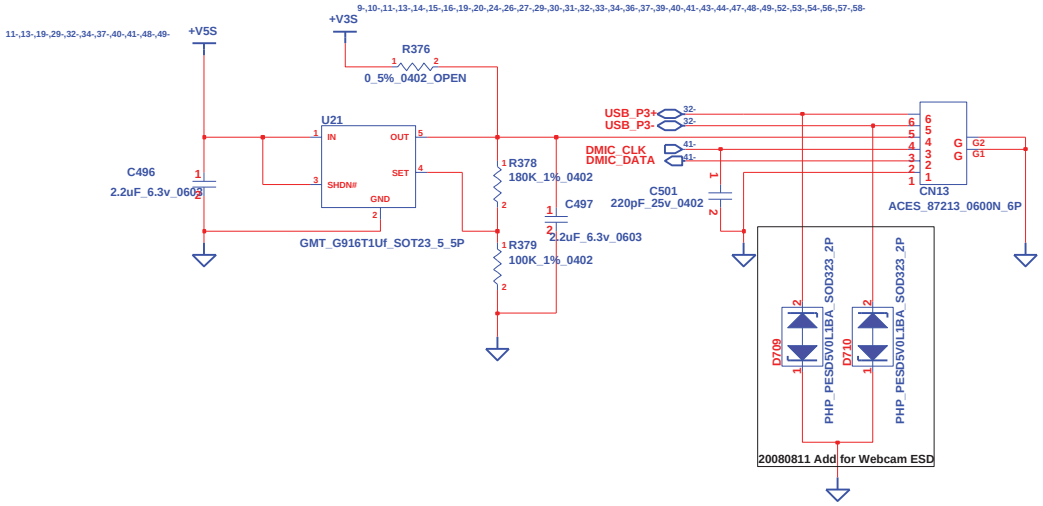

Webcam CONN & DIGITAL MIC

http://hobi-elektronika.net

CHANGE by	Wang, Alan	11-Aug-2008	

INVENTEC

TITLE: *DIABLO 2.0*
WEB CAM & FP CONN

SIZE	CODE	DOC. NUMBER	REV
A3	CS	1310A22155-0-MTRA02	

SHEET 52 OF 61

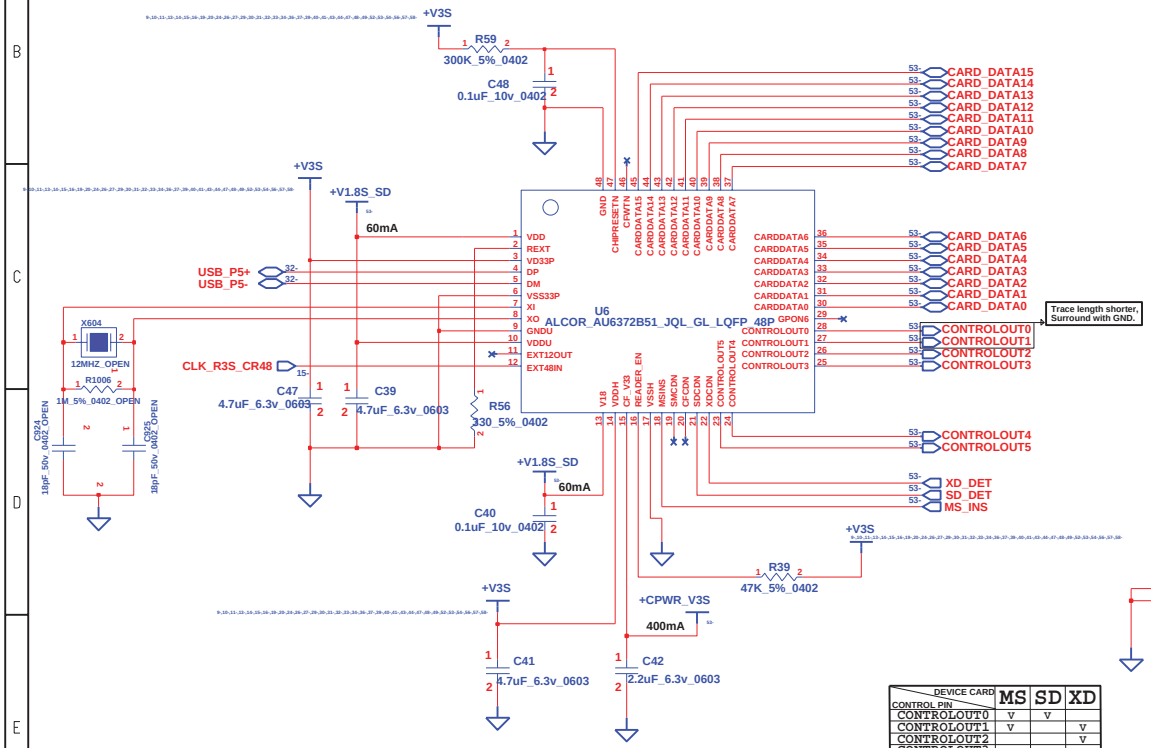

Cardreader Conn

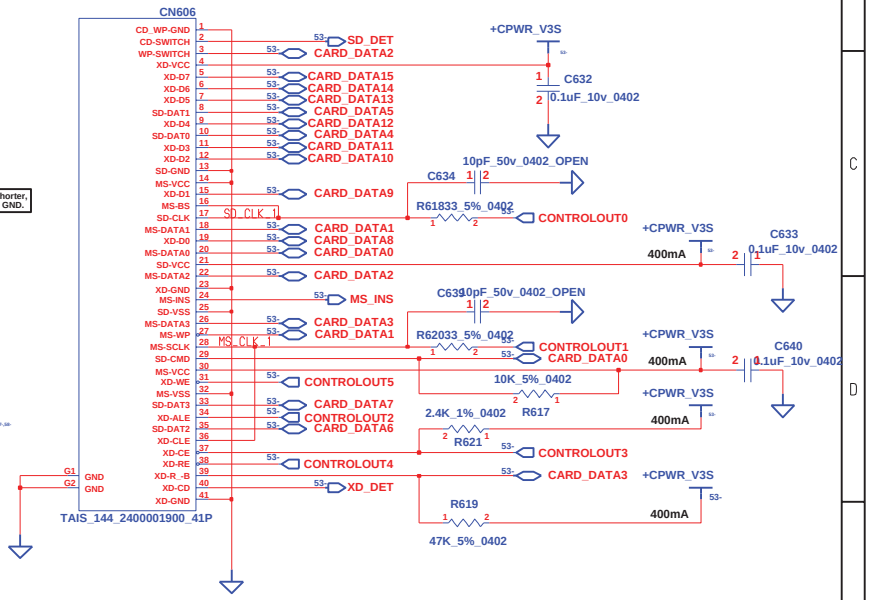

CONTROL PIN \ DEVICE CARD	MS	SD	XD
CONTROLOUT0	V	V	
CONTROLOUT1	V		V
CONTROLOUT2			V
CONTROLOUT3			V
CONTROLOUT4			V
CONTROLOUT5			V

DATA PIN \ DEVICE CARD	MS	SD	XD
CARDDATA0	V	V	
CARDDATA1	V		V
CARDDATA2	V	V	
CARDDATA3	V		V
CARDDATA4		V	
CARDDATA5		V	
CARDDATA6		V	
CARDDATA7		V	
CARDDATA8			V
CARDDATA9			V
CARDDATA10			V
CARDDATA11			V
CARDDATA12			V
CARDDATA13			V
CARDDATA14			V
CARDDATA15			V

http://hobi-elektronika.net

INVENTEC

TITLE DIABLO 2.0
5 in 1 Card Reader CONN

SIZE	CODE	DOC. NUMBER	REV
A3	CS	1310A22155-0-MTRA02	

CHANGE by Wang, Alan 31-Jul-2008

SHEET 53 OF 61

For dynamic load : VGAVCC, FBVDDQ & PEX_VDD ,two to three vias per amperer are recommended

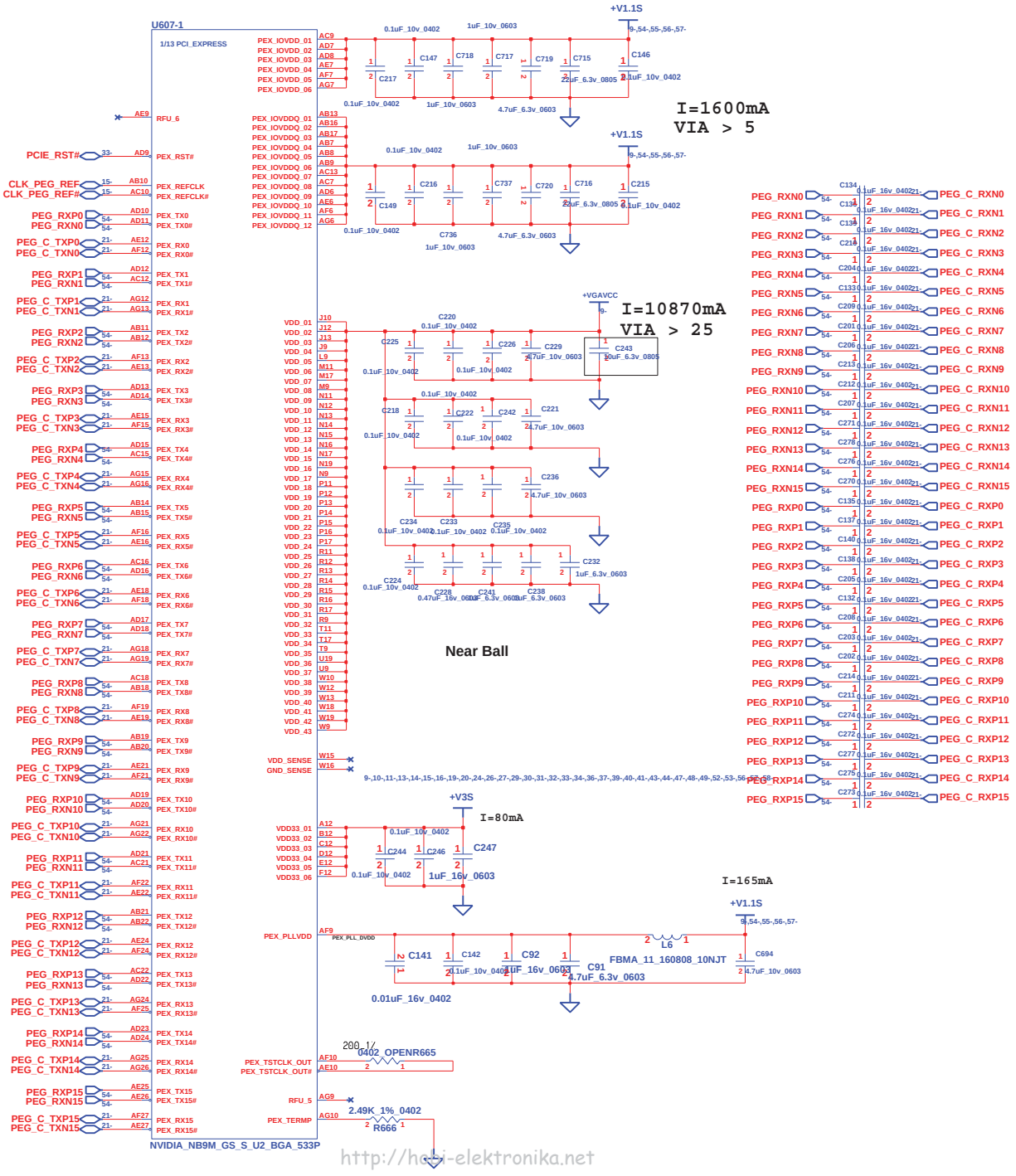

CHANGE by	Wong Alan
	31-Jul-2008
TITLE	DIABLO 2.0 nVIDIA NB9M GS - 1
SIZE	A3
CODE	CS
DOC. NUMBER	13103A22155-0-MTR
REV	A02
SHEET	54 OF 61

INVENTEC

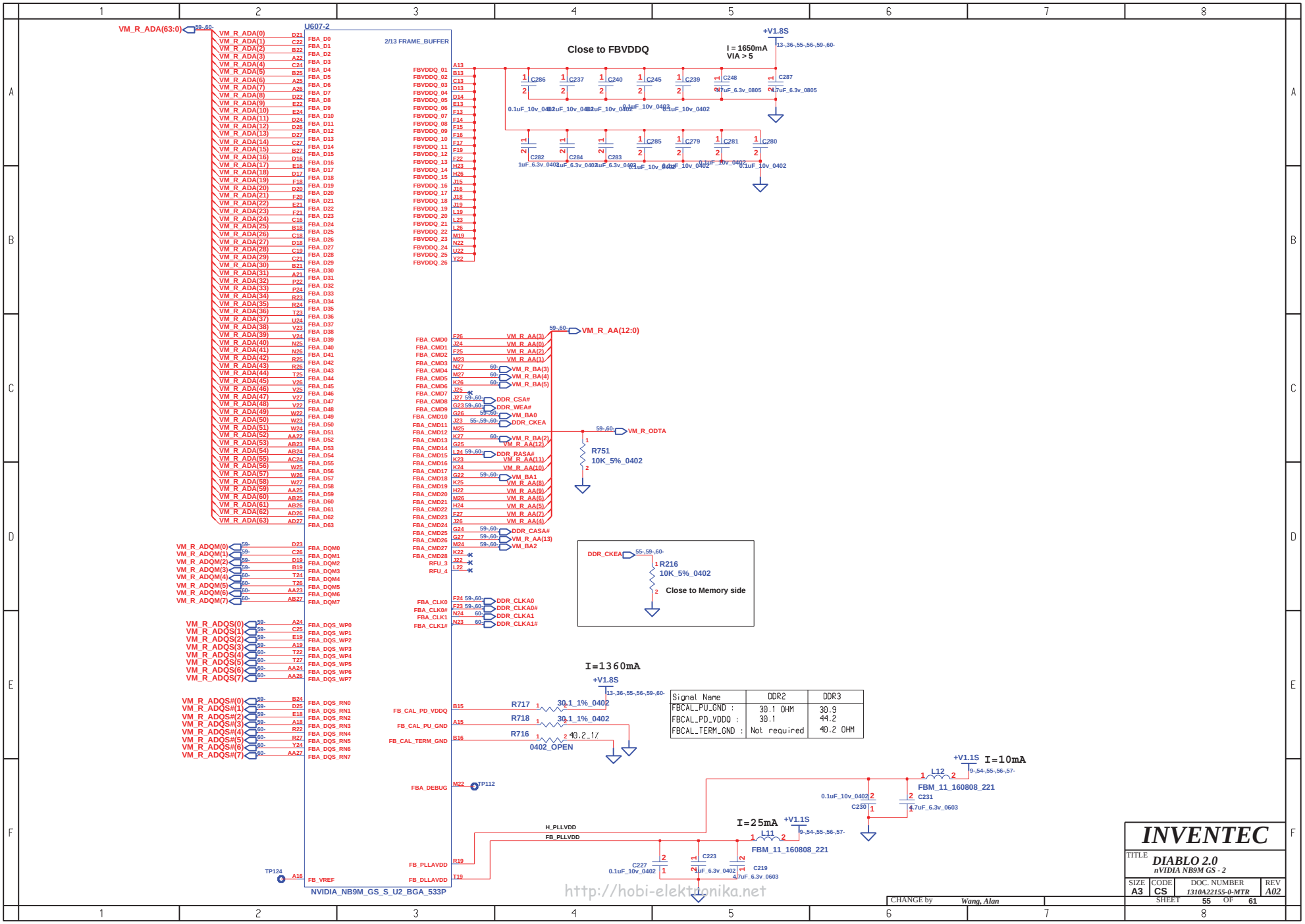

Signal Name	DDR2	DDR3
FBCAL_PU_GND :	30.1 OHM	30.9
FBCAL_PD_VDDQ :	30.1	44.2
FBCAL_TERM_GND :	Not required	40.2 OHM

INVENTEC

TITLE: DIABLO 2.0
nVIDIA NB9M GS - 2

SIZE	CODE	DOC. NUMBER	REV
A3	CS	1310A22155-0-MTR	A02

CHANGE by Wang, Alan

SHEET 55 OF 61

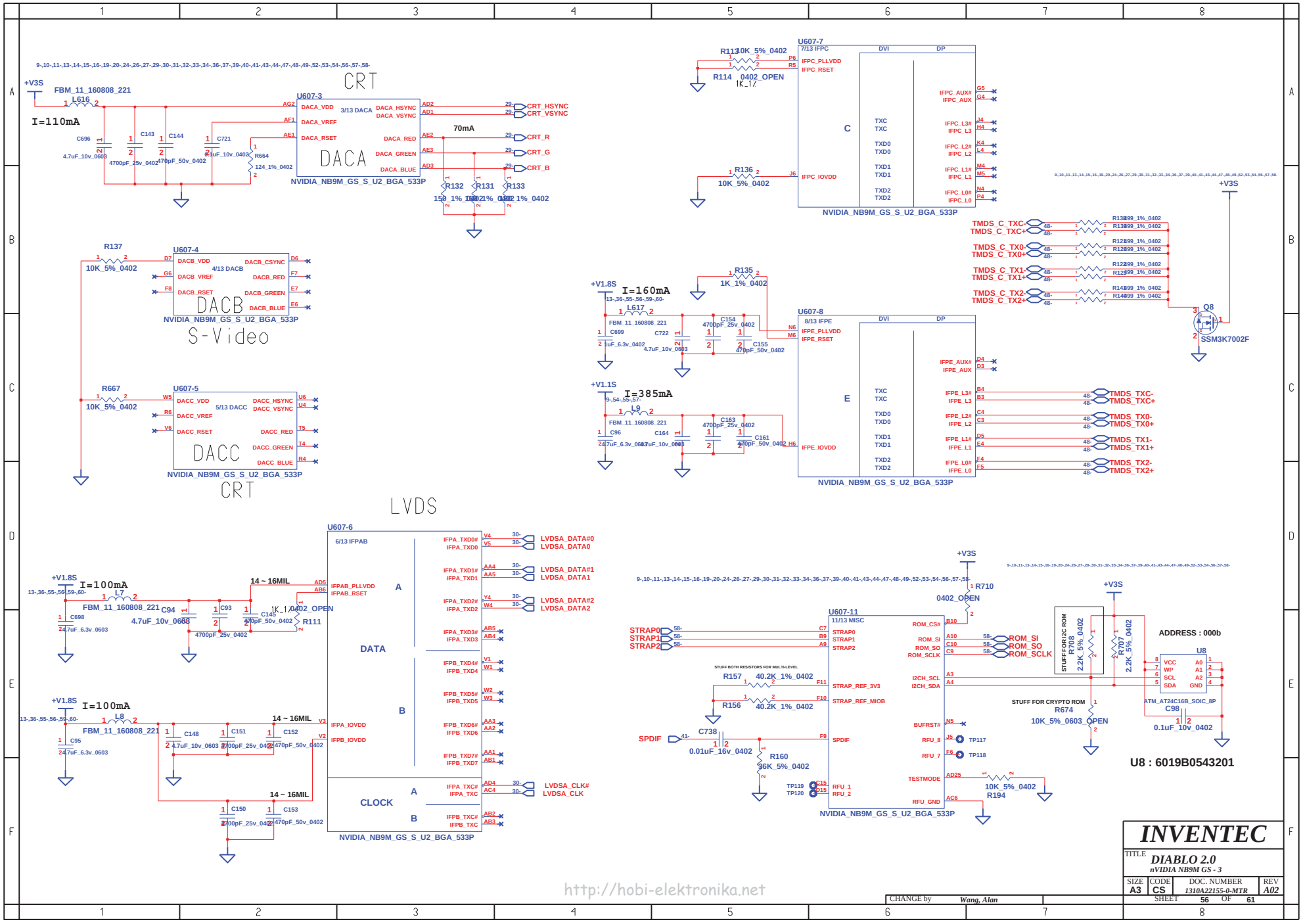
CRT
U607-3
DACA
3/13 DACA
NVIDIA_NB9M_GS_S_U2_BGA_533P
+V3S
FBM_11_160808_221
L616
I=110mA
70mA
CRT_HSYNC
CRT_VSYNC
CRT_R
CRT_G
CRT_B
R113 10K_5%_0402
R114 0402_OPEN
1K_1%
U607-7
7/13 IFPC
C
R136 10K_5%_0402
U607-4
DACB
4/13 DACB
S-Video
R137 10K_5%_0402
U607-5
DACC
5/13 DACC
R667 10K_5%_0402
CRT
+V1.8S
I=160mA
L617
R135 1K_1%_0402
U607-8
8/13 IFPE
E
+V1.1S
I=385mA
L9
TMDS_C_TXC-
TMDS_C_TXC+
TMDS_C_TX0-
TMDS_C_TX0+
TMDS_C_TX1-
TMDS_C_TX1+
TMDS_C_TX2-
TMDS_C_TX2+
Q8
SSM3K7002F
LVDS
U607-6
6/13 IFPAB
DATA
CLOCK
LVDSA_DATA#0
LVDSA_DATA0
LVDSA_DATA#1
LVDSA_DATA1
LVDSA_DATA#2
LVDSA_DATA2
LVDSA_CLK#
LVDSA_CLK
L7
L8
14 ~ 16MIL
R111 0402_OPEN
1K_1%
U607-11
11/13 MISC
STRAP0
STRAP1
STRAP2
ROM_SI
ROM_SO
ROM_SCLK
R710 0402_OPEN
R157 40.2K_1%_0402
R156 40.2K_1%_0402
SPDIF
C738 0.01uF_16v_0402
R160 36K_5%_0402
R194 10K_5%_0402
TP117
TP118
TP119
TP120
STUFF FOR I2C ROM
R708 2.2K_5%_0402
R707 2.2K_5%_0402
ADDRESS : 000b
U8
ATM_AT24C16B_SOIC_8P
C98 0.1uF_10v_0402
STUFF FOR CRYPTO ROM
R674 10K_5%_0603_OPEN
U8 : 6019B0543201
http://hobi-elektronika.net
INVENTEC
TITLE
DIABLO 2.0
nVIDIA NB9M GS - 3
SIZE A3
CODE CS
DOC. NUMBER 1310A22155-0-MTR
REV A02
CHANGE by Wang, Alan
SHEET 56 OF 61

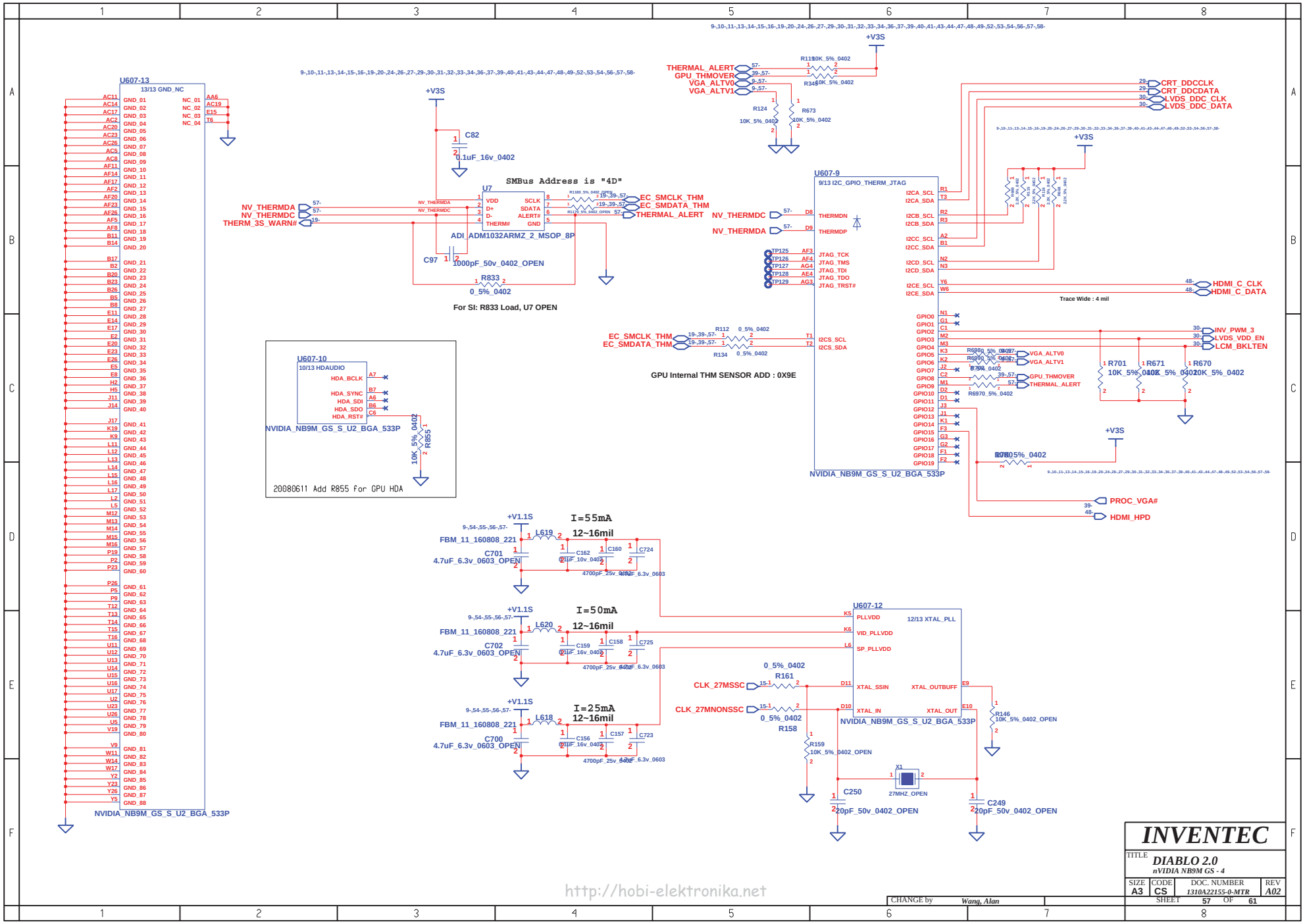
U607-13
13/13 GND_NC
NVIDIA_NB9M_GS_S_U2_BGA_533P
U7
ADI_ADM1032ARMZ_2_MSOP_8P
SMBus Address is "4D"
NV_THERMDA
NV_THERMDC
THERM_3S_WARN#
EC_SMCLK_THM
EC_SMDATA_THM
THERMAL_ALERT
C82
0.1uF_16v_0402
C97
1000pF_50v_0402_OPEN
R833
0_5%_0402
For SI: R833 Load, U7 OPEN
U607-9
9/13 I2C_GPIO_THERM_JTAG
THERMAL_ALERT
GPU_THMOVER
VGA_ALTV0
VGA_ALTV1
CRT_DDCCLK
CRT_DDCDATA
LVDS_DDC_CLK
LVDS_DDC_DATA
HDMI_C_CLK
HDMI_C_DATA
Trace Wide : 4 mil
INV_PWM_3
LVDS_VDD_EN
LCM_BKLTEN
R701 10K_5%_0402
R671 10K_5%_0402
R670 10K_5%_0402
PROC_VGA#
HDMI_HPD
GPU Internal THM SENSOR ADD : 0X9E
U607-10
10/13 HDAUDIO
NVIDIA_NB9M_GS_S_U2_BGA_533P
R855 10K_5%_0402
20080611 Add R855 for GPU HDA
I=55mA
12~16mil
I=50mA
12~16mil
I=25mA
12~16mil
FBM_11_160808_221
C701 4.7uF_6.3v_0603_OPEN
C702 4.7uF_6.3v_0603_OPEN
C700 4.7uF_6.3v_0603_OPEN
U607-12
12/13 XTAL_PLL
NVIDIA_NB9M_GS_S_U2_BGA_533P
CLK_27MSSC
CLK_27MNONSSC
R161 0_5%_0402
R158 0_5%_0402
R159 10K_5%_0402_OPEN
R146 10K_5%_0402_OPEN
X1 27MHZ_OPEN
C250 20pF_50v_0402_OPEN
C249 20pF_50v_0402_OPEN
INVENTEC
TITLE DIABLO 2.0
nVIDIA NB9M GS - 4
SIZE A3
CODE CS
DOC. NUMBER 1310A22155-0-MTR
REV A02
CHANGE by Wang, Alan
SHEET 57 OF 61
http://hobi-elektronika.net

GB1 Family GPU Strap Options

Physical Strapping Pin	Power Rail	Logical Strapping Bit 3	Logical Strapping Pin 2	Logical Strapping Pin 1	Logical Strapping Pin 0
ROM_SO	+V3S	XCLK_277	TVMODE [2]	TVMODE [1]	TVMODE [0]
ROM_SCLK	+V3S	PCI_DEVID [4]	SUB_VENDOR	SLOT_CLK_CFG	PEX_PLL_EN_TERM100
ROM_SI	+V3S	RAMCFG [3]	RAMCFG [2]	RAMCFG [1]	RAMCFG [0]
STRAP2	+V3S	PCI_DEVID [3]	PCI_DEVID [2]	PCI_DEVID [1]	PCI_DEVID [0]
STRAP1	+V3S	3GIO_PADCFG [3]	3GIO_PADCFG [2]	3GIO_PADCFG [1]	3GIO_PADCFG [0]
STRAP0	+V3S	USER [3]	USER [2]	USER [1]	USER [0]

GB1 Family GPU Strap Options (DIABLO 2.0) with Samsung GDDR2 64M X 16

Physical Strapping Pin	Power Rail	Logical Strapping Bit 3	Logical Strapping Pin 2	Logical Strapping Pin 1	Logical Strapping Pin 0
ROM_SO	+V3S	1	1	1	0
ROM_SCLK	+V3S	0	0	1	0
ROM_SI	+V3S	0	0	0	1
STRAP2	+V3S	1	0	0	1
STRAP1	+V3S	0	0	0	1
STRAP0	+V3S	1	1	1	1

Logical Strap Bit Mapping

Resistor Values	Pull - up to VDD	Pull - down to GND
5K ohm	1000	0000
10K ohm	1001	0001
15K ohm	1010	0010
20K ohm	1011	0011
25K ohm	1100	0100
30K ohm	1101	0101
35K ohm	1110	0110
45K ohm	1111	0111

NB9M-GS RAMCFG[3:0]

32M X 16 GDDR2	RAMCFG [3]	RAMCFG [2]	RAMCFG [1]	RAMCFG [0]
Samsung	0	1	0	1
Qimonda	0	1	1	0
Hynix	0	1	1	1

64M X 16 GDDR2	RAMCFG [3]	RAMCFG [2]	RAMCFG [1]	RAMCFG [0]
Samsung	0	0	0	1
Qimonda	0	0	1	0
Hynix	0	0	0	0

GB1 Family GPU Strap Options (DIABLO 2.0) with Hynix GDDR2 64M X 16

Physical Strapping Pin	Power Rail	Logical Strapping Bit 3	Logical Strapping Pin 2	Logical Strapping Pin 1	Logical Strapping Pin 0
ROM_SO	+V3S	1	1	1	0
ROM_SCLK	+V3S	0	0	1	0
ROM_SI	+V3S	0	0	0	0
STRAP2	+V3S	1	0	0	1
STRAP1	+V3S	0	0	0	1
STRAP0	+V3S	1	1	1	1

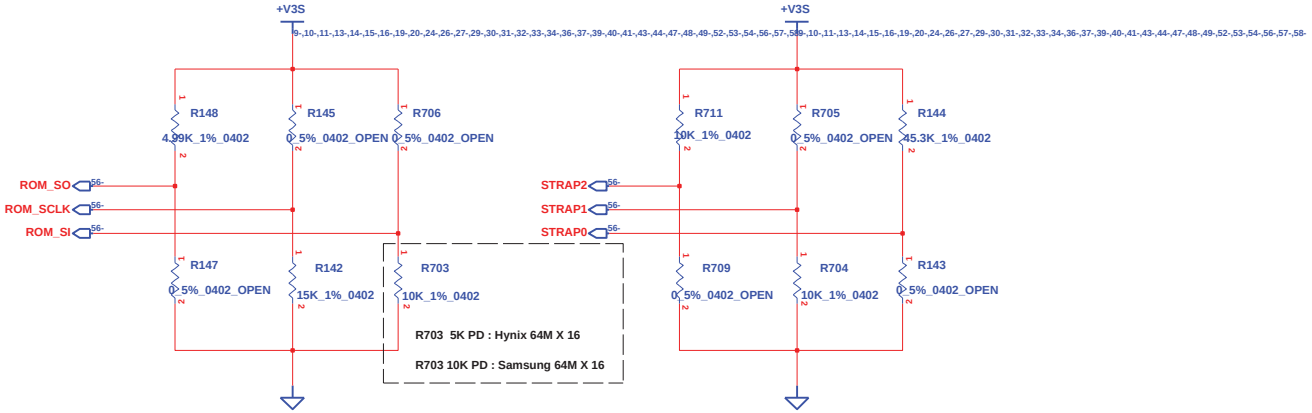

http://hobi-elektronika.net

INVENTEC			
TITLE DIABLO 2.0 nVIDIA NB9M GS - 5			
SIZE A3	CODE CS	DOC. NUMBER 1310A22155-0-MTR	REV A02
CHANGE by Wang, Alan		SHEET 58 OF 61	

DIABLO 2.0 USE MEMORY RVL
SANSUNG K4N56163QG_HC25
HYNIX HY5PS121621CFP-25

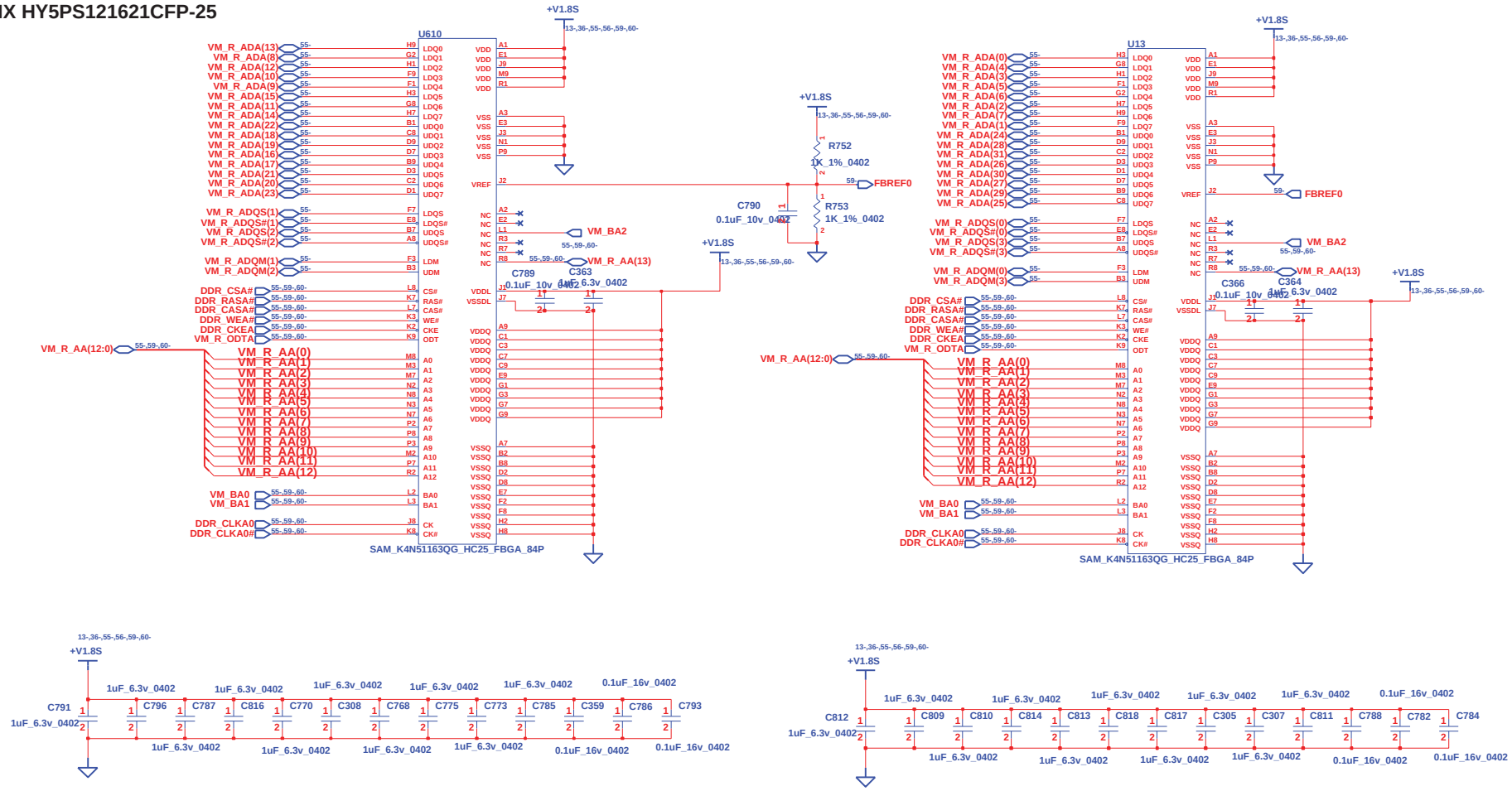

INVENTEC			
TITLE	DIABLO 2.0 VRAM (1/2)		
SIZE A3	CODE CS	DOC. NUMBER 1310A22155-0-MTR	REV A02
CHANGE by Wang, Alan		SHEET 59 OF 61	

http://hobi-elektronika.net

DIABLO 2.0 USE MEMORY RVL
SANSUNG K4N56163QG_HC25
HYNIX HY5PS121621CFP-25

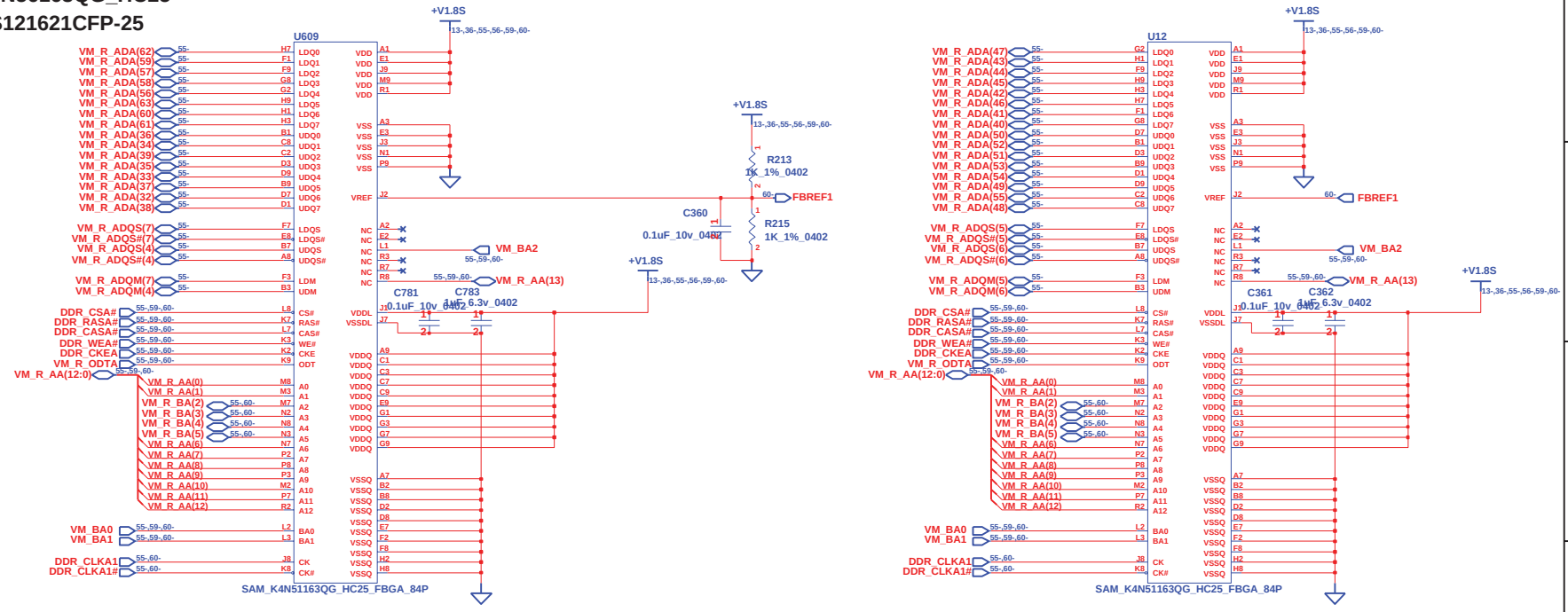

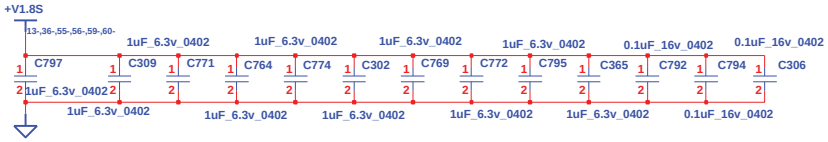

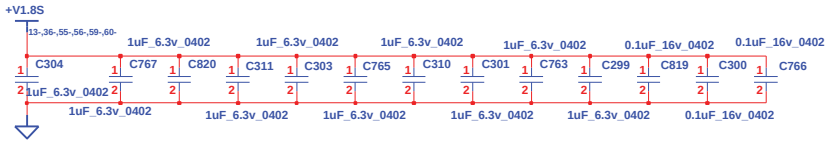

Layou Note: Put these resisters close to the V-RAM.

http://hobi-elektronika.net

INVENTEC			
TITLE: DIABLO 2.0 VRAM (2/2)			
SIZE A3	CODE CS	DOC. NUMBER 1310A22155-0-MTR	REV A02
CHANGE by Wang, Alan		SHEET 60 OF 61	