ZZZ

PCB DAZ@
DA8000WX000
PCB 10G LA-A401P REV0 M/B HDI 1

S1

FRAME
EC0MV000200

@

S4

FRAME
EC0MV000200
for GLONASS
@

Compal Confidential

Schematics Document

ZSJVV

LA-A401P

2013-02-26

REV:0.1

Security Classification	Compal Secret Data		
Issued Date	2012/11/09	Deciphered Date	2014/11/09

THIS SHEET OF ENGINEERING DRAWING IS THE PROPRIETARY PROPERTY OF COMPAL ELECTRONICS, INC. AND CONTAINS CONFIDENTIAL AND TRADE SECRET INFORMATION. THIS SHEET MAY NOT BE TRANSFERED FROM THE CUSTODY OF THE COMPETENT DIVISION OF R&D DEPARTMENT EXCEPT AS AUTHORIZED BY COMPAL ELECTRONICS, INC. NEITHER THIS SHEET NOR THE INFORMATION IT CONTAINS MAY BE USED BY OR DISCLOSED TO ANY THIRD PARTY WITHOUT PRIOR WRITTEN CONSENT OF COMPAL ELECTRONICS, INC.

Compal Electronics, Inc.

Title: *Cover Page*

Size: Custom | Document Number: *ZSJVV -LA-A401P* | Rev: 0.1

Date: Wednesday, April 17, 2013 | Sheet 1 of 28

giordano2 block diagram

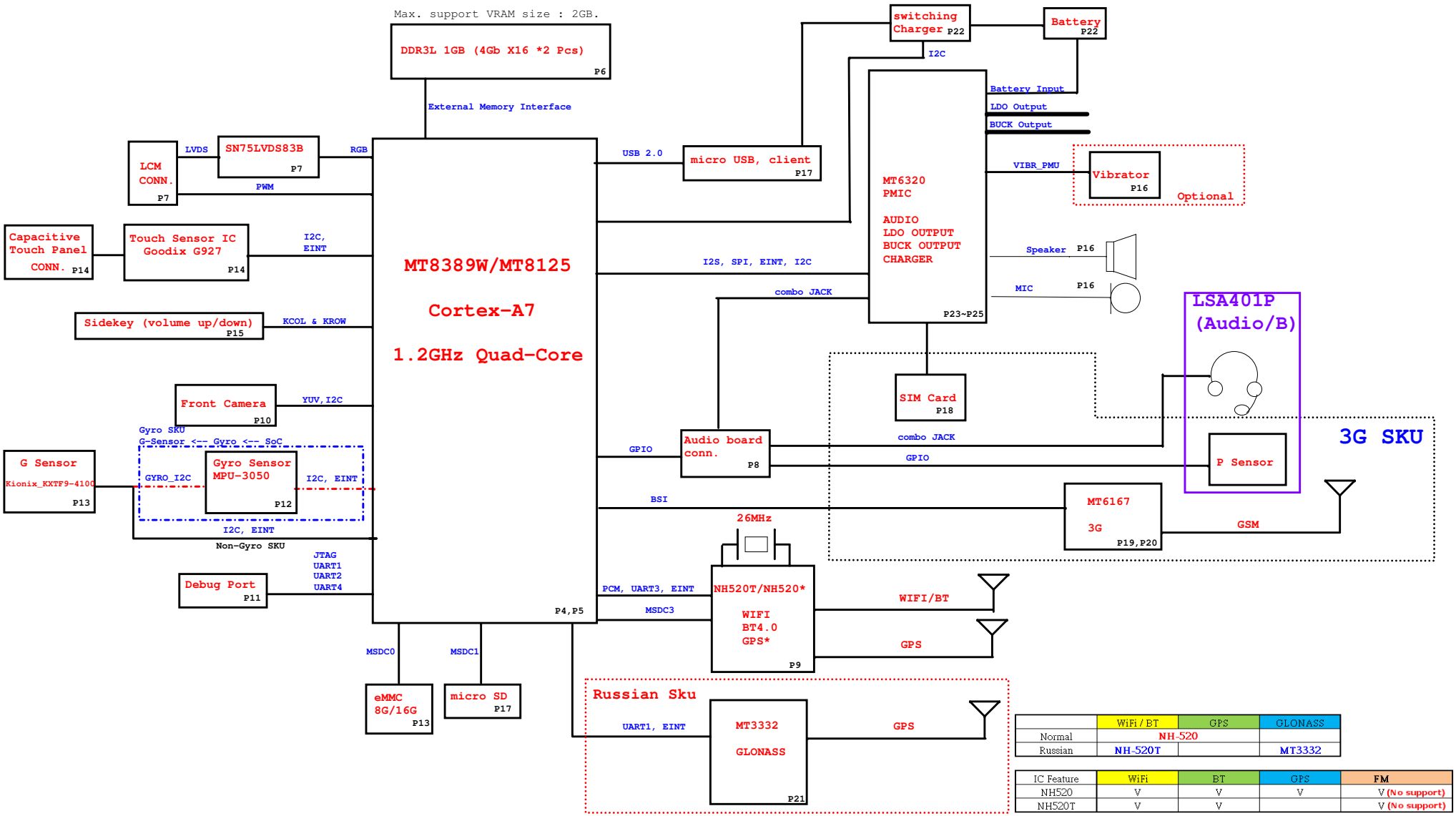

	WiFi / BT	GPS	GLONASS
Normal	NH-520		
Russian	NH-520T		MT3332

IC Feature	WiFi	BT	GPS	FM
NH520	V	V	V	V (No support)
NH520T	V	V		V (No support)

Security Classification	Compal Secret Data		
Issued Date	2012/11/03	Deciphered Date	2013/11/03

THIS SHEET OF ENGINEERING DRAWING IS THE PROPRIETARY PROPERTY OF COMPAL ELECTRONICS, INC. AND CONTAINS CONFIDENTIAL AND TRADE SECRET INFORMATION. THIS SHEET MAY NOT BE TRANSFERED FROM THE CUSTODY OF THE COMPETENT DIVISION OF R&D DEPARTMENT EXCEPT AS AUTHORIZED BY COMPAL ELECTRONICS, INC. NEITHER THIS SHEET NOR THE INFORMATION IT CONTAINS MAY BE USED BY OR DISCLOSED TO ANY THIRD PARTY WITHOUT PRIOR WRITTEN CONSENT OF COMPAL ELECTRONICS, INC.

Compal Electronics, Inc.

Title: Block Diagram

Size: C | Document Number: ZSJVV -LA-A401P | Rev: 0.1

Date: Wednesday, April 17, 2013 | Sheet 2 of 28

Voltage Rails

MT6320 Power Plane	Function	Power Level	IDLE	Sleep mode
VCORE_PMU	VCORE switching output	0.75 ~ 1.3	ON	Low voltage
VPROC_PMU	VPROC switching output	0.75 ~ 1.3	ON	Low voltage
VTCXO_1_PMU	LDO output for TCXO	2.8V	ON	OFF
VCAMA_PMU	LDO output for camaera analog	2.8V	ON	Gating by SW
VSRAM_PMU	LDO output used for 1.2V SRAM	1.2V	ON	Low voltage
VDD28_6583	LDO output used for 2.8V IO	2.8V	ON	Gating by SW
VGP2_PMU	LDO output for camaera 1.8V	1.8V	ON	Gating by SW
VEMC_3V3_PMU	LDO output for eMMC&P-sensor	3.3V	ON	Gating by SW
VMCH_PMU	LDO output for SD card	3.3V	ON	Gating by SW
VGP5_PMU	LDO output for Touch panel	2.8V	ON	Gating by SW
DDR3VCCIO	LDO output for DDR3L	1.35V	ON	Gating by SW
VDD33_6583	LCD & Bridge power	3.3V	ON	Gating by SW
VDD18_6583	LDO output used for 1.8V IO	1.8V	ON	Gating by SW
VRF18_PMU	LDO output for RF_MT6167	1.8V	ON	Gating by SW

I2C address

Device	Address(7 bit)	Address(8bit)	
		Write	Read
Gyro (MPU-3050)	0x68	0xD0	0xD1
G-sensor (KXTIK-1004)	0x0F	0x1E	0x1F
Touch screen (GT927)	0x5D	0xBA	0xBB
Camera (OV7675)	0x21	0x42	0x43
Charge (BQ24196)	0x6B	0xD6	0xD7
G-sensor(KXTIK-1004)	0x0F	0x1E	0x1F
PMU(MT6320)			

Main board ID

MB_ID0	MB_ID1	
0	0	EVT
0	1	DVT
1	0	PVT
1	1	MP

BOM structure

Name	Function	
3G@	3G only	
WIFI_ONLY@	WIFI ONLY	
DAZ@	PCB	
EMC@	for EMC request	
NH520@	AW-NH520	
NH520_EMC@	GPS EMC	
GLONASS@	MT3332	

Security Classification	Compal Secret Data		
Issued Date	2012/11/03	Deciphered Date	2013/11/03

THIS SHEET OF ENGINEERING DRAWING IS THE PROPRIETARY PROPERTY OF COMPAL ELECTRONICS, INC. AND CONTAINS CONFIDENTIAL AND TRADE SECRET INFORMATION. THIS SHEET MAY NOT BE TRANSFERED FROM THE CUSTODY OF THE COMPETENT DIVISION OF R&D DEPARTMENT EXCEPT AS AUTHORIZED BY COMPAL ELECTRONICS, INC. NEITHER THIS SHEET NOR THE INFORMATION IT CONTAINS MAY BE USED BY OR DISCLOSED TO ANY THIRD PARTY WITHOUT PRIOR WRITTEN CONSENT OF COMPAL ELECTRONICS, INC.

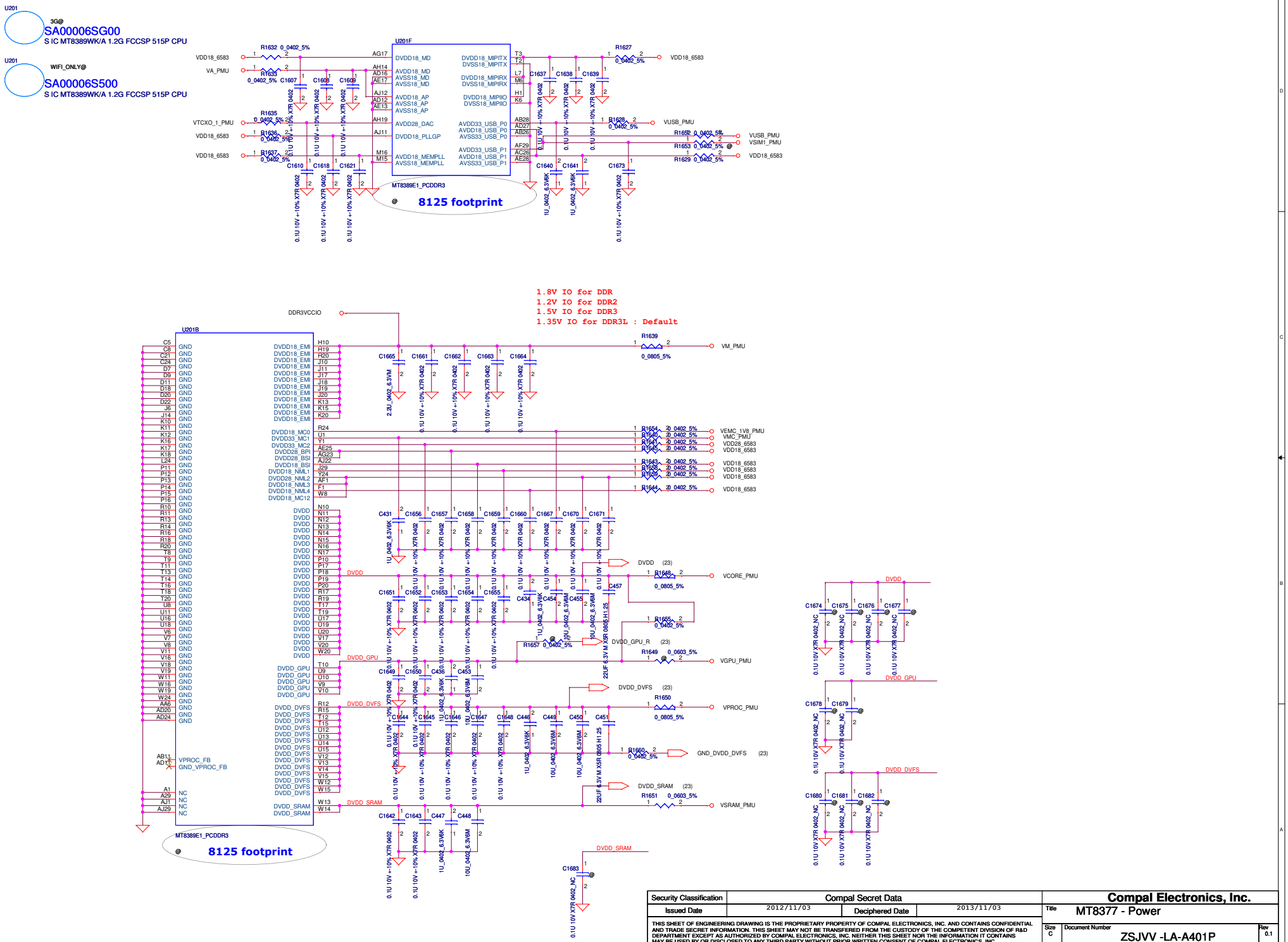

Security Classification	Compal Secret Data		
Issued Date	2012/11/03	Deciphered Date	2013/11/03

THIS SHEET OF ENGINEERING DRAWING IS THE PROPRIETARY PROPERTY OF COMPAL ELECTRONICS, INC. AND CONTAINS CONFIDENTIAL AND TRADE SECRET INFORMATION. THIS SHEET MAY NOT BE TRANSFERED FROM THE CUSTODY OF THE COMPETENT DIVISION OF R&D DEPARTMENT EXCEPT AS AUTHORIZED BY COMPAL ELECTRONICS, INC. NEITHER THIS SHEET NOR THE INFORMATION IT CONTAINS MAY BE USED BY OR DISCLOSED TO ANY THIRD PARTY WITHOUT PRIOR WRITTEN CONSENT OF COMPAL ELECTRONICS, INC.

Compal Electronics, Inc.

Title: MT8377 - Power

Size: C | Document Number: ZSJVV -LA-A401P | Rev: 0.1

Date: Thursday, April 18, 2013 | Sheet 4 of 28

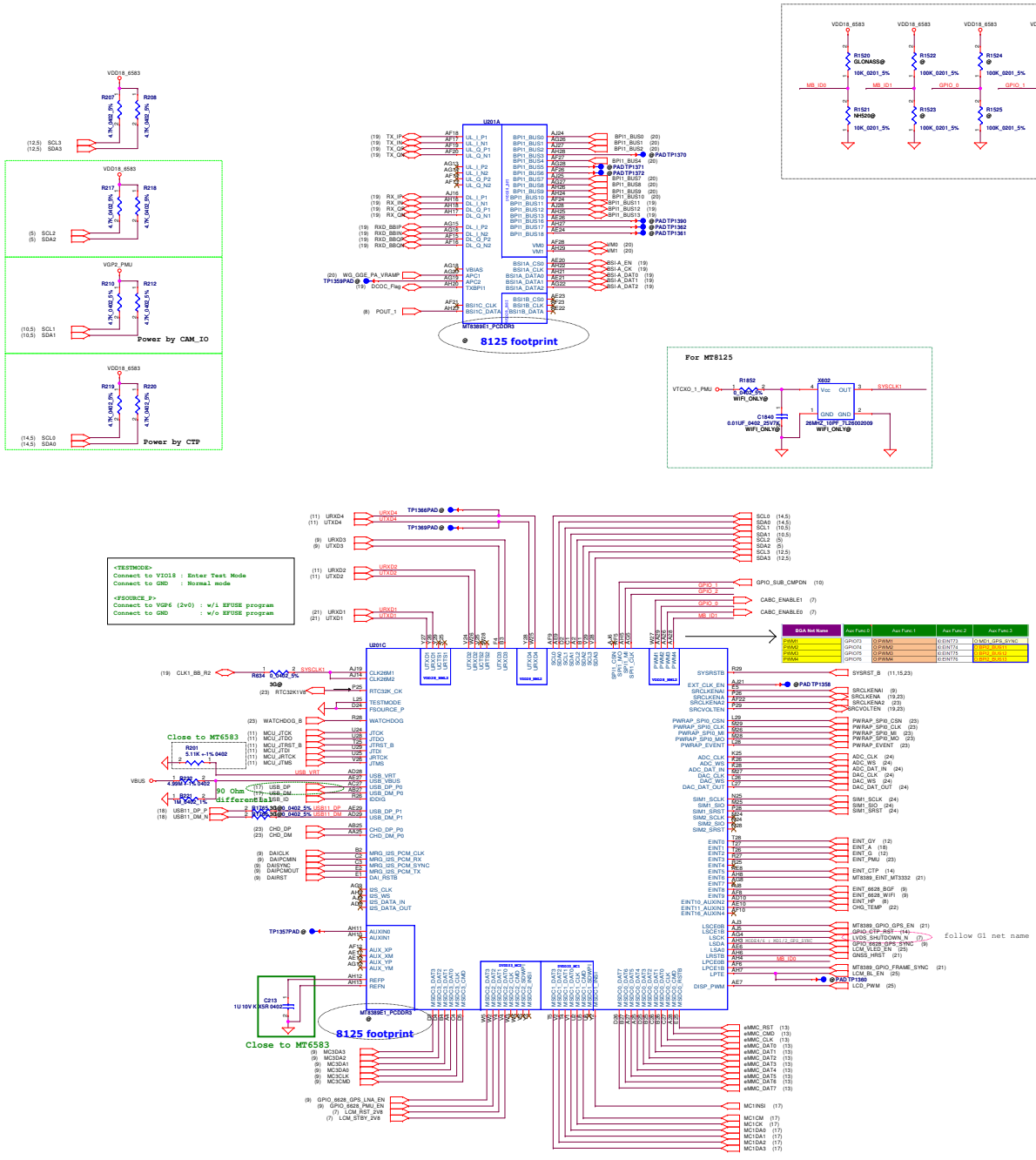

Security Classification	Compal Secret Data			Compal Electronics, Inc.
Issued Date	2012/11/03	Deciphered Date	2013/11/03	Title: MT8377 - Baseband
THIS SHEET OF ENGINEERING DRAWING IS THE PROPRIETARY PROPERTY OF COMPAL ELECTRONICS, INC. AND CONTAINS CONFIDENTIAL AND TRADE SECRET INFORMATION. THIS SHEET MAY NOT BE TRANSFERRED FROM THE CUSTODY OF THE COMPETENT DIVISION OF R&D DEPARTMENT EXCEPT AS AUTHORIZED BY COMPAL ELECTRONICS, INC. NEITHER THIS SHEET NOR THE INFORMATION IT CONTAINS MAY BE USED BY OR DISCLOSED TO ANY THIRD PARTY WITHOUT PRIOR WRITTEN CONSENT OF COMPAL ELECTRONICS, INC.				Size: D / Document Number: ZSJVV -LA-A401P / Rev: 0.1
				Date: Wednesday, April 17, 2013 / Sheet 5 of 28

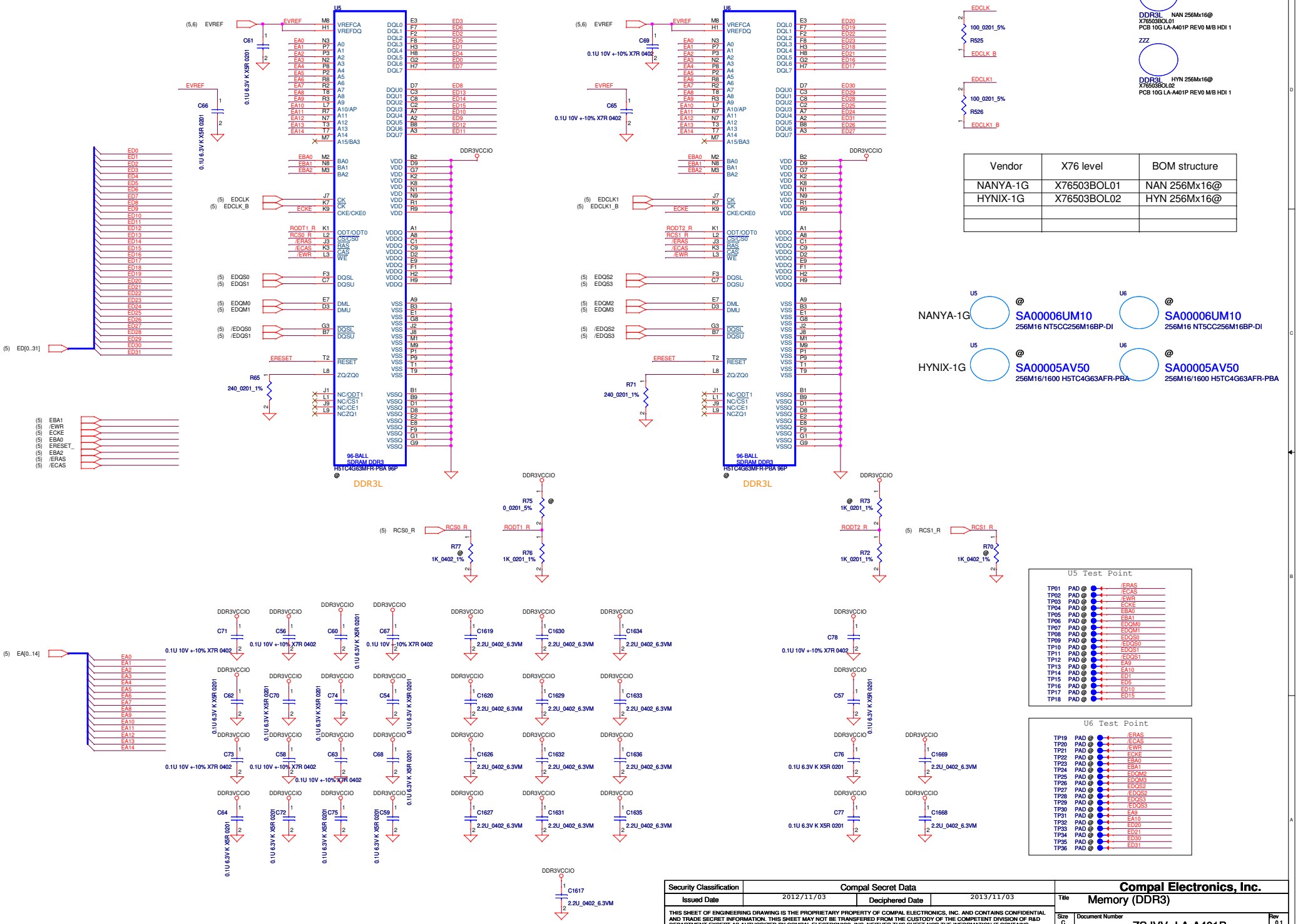

Vendor	X76 level	BOM structure
NANYA-1G	X76503BOL01	NAN 256Mx16@
HYNIX-1G	X76503BOL02	HYN 256Mx16@

Security Classification	Compal Secret Data			Compal Electronics, Inc.
Issued Date	2012/11/03	Deciphered Date	2013/11/03	Title: Memory (DDR3)

THIS SHEET OF ENGINEERING DRAWING IS THE PROPRIETARY PROPERTY OF COMPAL ELECTRONICS, INC. AND CONTAINS CONFIDENTIAL AND TRADE SECRET INFORMATION. THIS SHEET MAY NOT BE TRANSFERED FROM THE CUSTODY OF THE COMPETENT DIVISION OF R&D DEPARTMENT EXCEPT AS AUTHORIZED BY COMPAL ELECTRONICS, INC. NEITHER THIS SHEET NOR THE INFORMATION IT CONTAINS MAY BE USED BY OR DISCLOSED TO ANY THIRD PARTY WITHOUT PRIOR WRITTEN CONSENT OF COMPAL ELECTRONICS, INC.

Size	Document Number	Rev
C	ZSJVV -LA-A401P	0.1

Date: Wednesday, April 17, 2013 Sheet 6 of 28

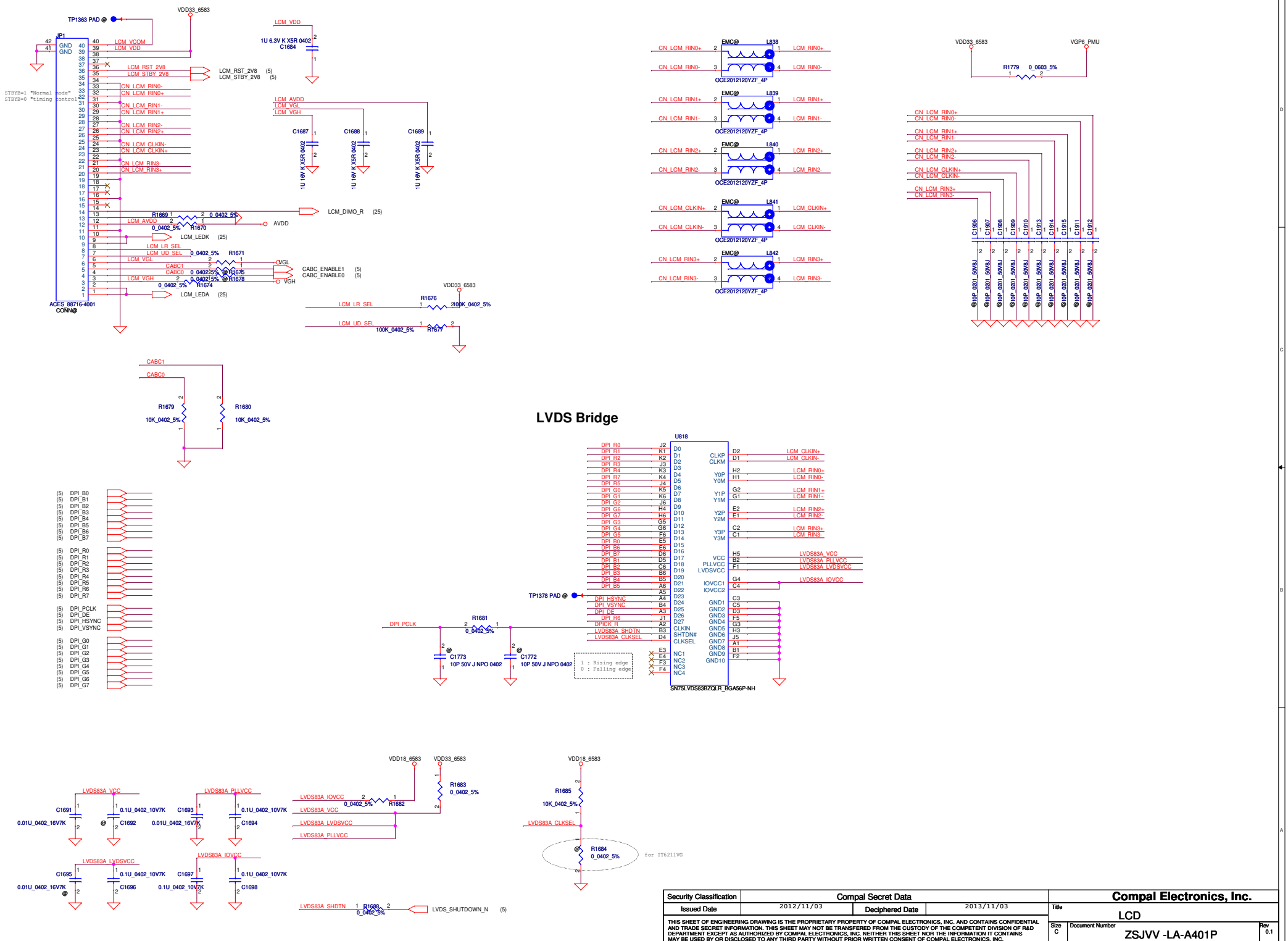
LVDS Bridge
JP1
ACES_88716-4001
CONN@
TP1363 PAD @
VDD33_6583
LCM_VDD
1U 6.3V K X5R 0402
C1684
LCM_RST_2V8 (5)
LCM_STBY_2V8 (5)
STBYB=1 "Normal mode"
STBYB=0 "timing control"
LCM_AVDD
LCM_VGL
LCM_VGH
C1687
C1688
C1689
1U 16V K X5R 0402
LCM_DIMO_R (25)
R1669 0_0402_5%
R1670 0_0402_5%
AVDD
LCM_LEDK (25)
LCM_LR_SEL
LCM_UD_SEL
R1671 0_0402_5%
VGL
CABC1
CABC0
R1675 0_0402_5%
R1678 0_0402_5%
VGH
CABC_ENABLE1 (5)
CABC_ENABLE0 (5)
R1674 0_0402_5%
LCM_LEDA (25)
R1676 100K_0402_5%
R1677 100K_0402_5%
R1679 10K_0402_5%
R1680 10K_0402_5%
EMC@
L838
L839
L840
L841
L842
OCE2012120YZF_4P
CN_LCM_RIN0+
CN_LCM_RIN0-
CN_LCM_RIN1+
CN_LCM_RIN1-
CN_LCM_RIN2+
CN_LCM_RIN2-
CN_LCM_CLKIN+
CN_LCM_CLKIN-
CN_LCM_RIN3+
CN_LCM_RIN3-
LCM_RIN0+
LCM_RIN0-
LCM_RIN1+
LCM_RIN1-
LCM_RIN2+
LCM_RIN2-
LCM_CLKIN+
LCM_CLKIN-
LCM_RIN3+
LCM_RIN3-
VGP6_PMU
R1779 0_0603_5%
C1906
C1907
C1908
C1909
C1910
C1913
C1914
C1915
C1911
C1912
@0P_0201_50V8J
U818
SN75LVDS83BZQLR_BGA56P-NH
DPI_R0
DPI_R1
DPI_R2
DPI_R3
DPI_R4
DPI_R7
DPI_R5
DPI_G0
DPI_G1
DPI_G2
DPI_G6
DPI_G7
DPI_G3
DPI_G4
DPI_G5
DPI_B0
DPI_B6
DPI_B7
DPI_B1
DPI_B2
DPI_B3
DPI_B4
DPI_B5
DPI_HSYNC
DPI_VSYNC
DPI_DE
DPI_R6
DPICK_R
LVDS83A_SHDTN
LVDS83A_CLKSEL
DPI_PCLK
TP1378 PAD @
R1681 0_0402_5%
C1773 10P 50V J NPO 0402
C1772 10P 50V J NPO 0402
1 : Rising edge
0 : Falling edge
LVDS83A_VCC
LVDS83A_PLLVCC
LVDS83A_IOVCC
LVDS83A_LVDSVCC
LVDS83A_CLKSEL
LVDS83A_SHDTN
LVDS83A_IOVCC
LVDS83A_VCC
LVDS83A_PLLVCC
LVDS83A_LVDSVCC
LVDS83A_IOVCC
C1691
C1692
C1693
C1694
C1695
C1696
C1697
C1698
0.01U_0402_16V7K
0.1U_0402_10V7K
R1682 0_0402_5%
R1683 0_0402_5%
R1685 10K_0402_5%
R1684 0_0402_5%
for IT6211VG
LVDS_SHUTDOWN_N (5)
Security Classification
Compal Secret Data
Issued Date
2012/11/03
Deciphered Date
2013/11/03
Compal Electronics, Inc.
Title
LCD
Size
C
Document Number
ZSJVV -LA-A401P
Rev
0.1
Date: Thursday, April 18, 2013
Sheet 7 of 28
THIS SHEET OF ENGINEERING DRAWING IS THE PROPRIETARY PROPERTY OF COMPAL ELECTRONICS, INC. AND CONTAINS CONFIDENTIAL AND TRADE SECRET INFORMATION. THIS SHEET MAY NOT BE TRANSFERED FROM THE CUSTODY OF THE COMPETENT DIVISION OF R&D DEPARTMENT EXCEPT AS AUTHORIZED BY COMPAL ELECTRONICS, INC. NEITHER THIS SHEET NOR THE INFORMATION IT CONTAINS MAY BE USED BY OR DISCLOSED TO ANY THIRD PARTY WITHOUT PRIOR WRITTEN CONSENT OF COMPAL ELECTRONICS, INC.

Earphone RECEIVER

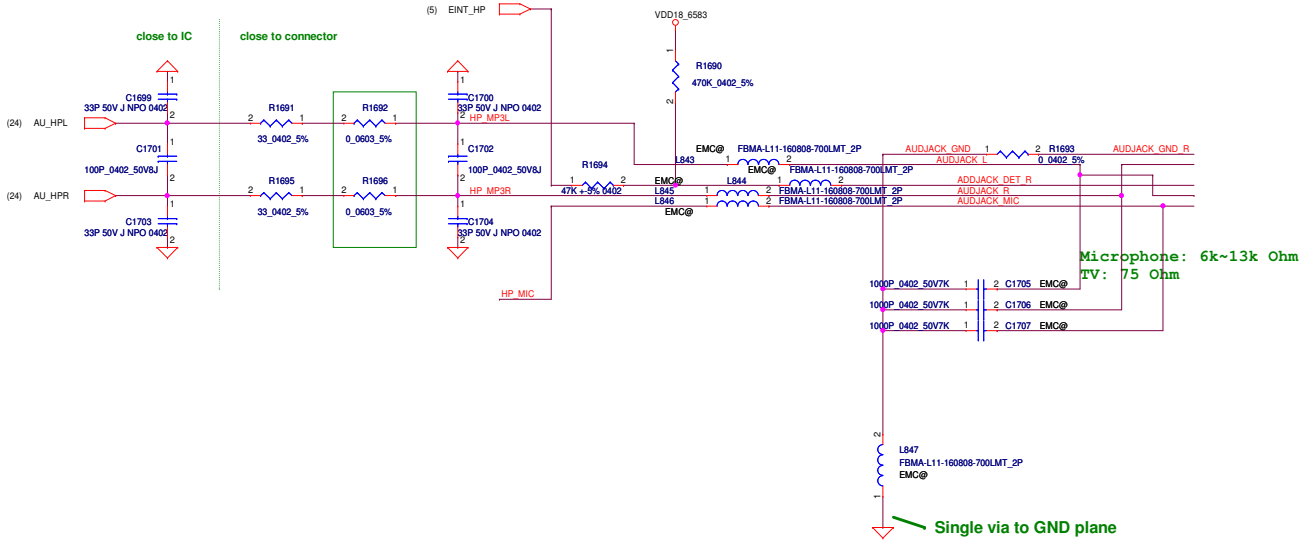

To Audio board

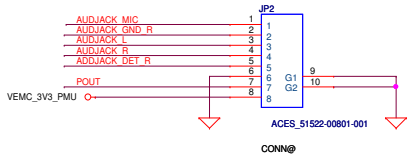

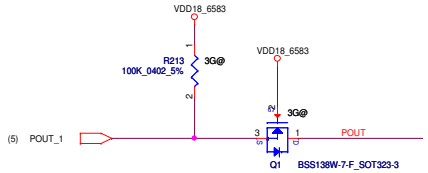

Earphone MICPHONE

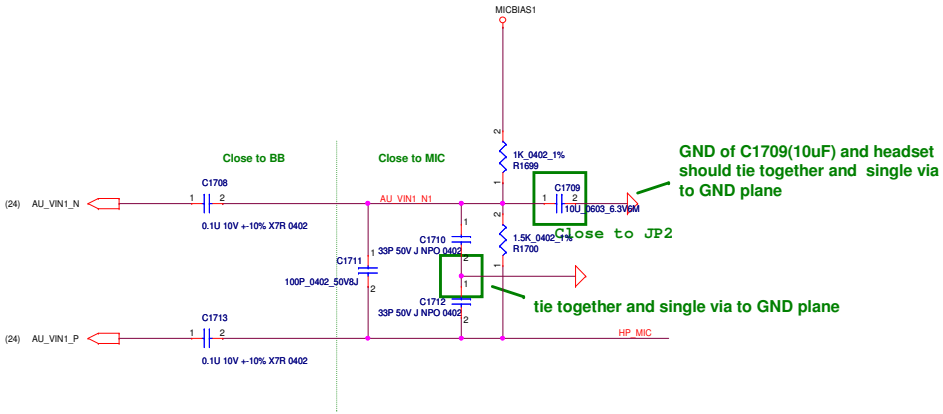

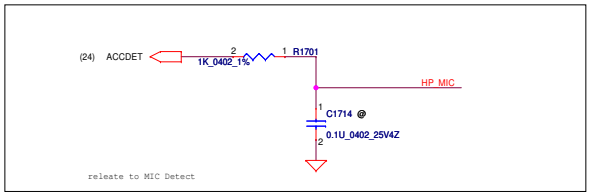

Security Classification	Compal Secret Data			Compal Electronics, Inc.
Issued Date	2012/11/03	Deciphered Date	2013/11/03	Title: Audio,I/O,Audio board Conn.
				Size: C; Document Number: ZSJVV -LA-A401P; Rev: 0.1
				Date: Wednesday, April 17, 2013; Sheet 8 of 28

THIS SHEET OF ENGINEERING DRAWING IS THE PROPRIETARY PROPERTY OF COMPAL ELECTRONICS, INC. AND CONTAINS CONFIDENTIAL AND TRADE SECRET INFORMATION. THIS SHEET MAY NOT BE TRANSFERED FROM THE CUSTODY OF THE COMPETENT DIVISION OF R&D DEPARTMENT EXCEPT AS AUTHORIZED BY COMPAL ELECTRONICS, INC. NEITHER THIS SHEET NOR THE INFORMATION IT CONTAINS MAY BE USED BY OR DISCLOSED TO ANY THIRD PARTY WITHOUT PRIOR WRITTEN CONSENT OF COMPAL ELECTRONICS, INC.

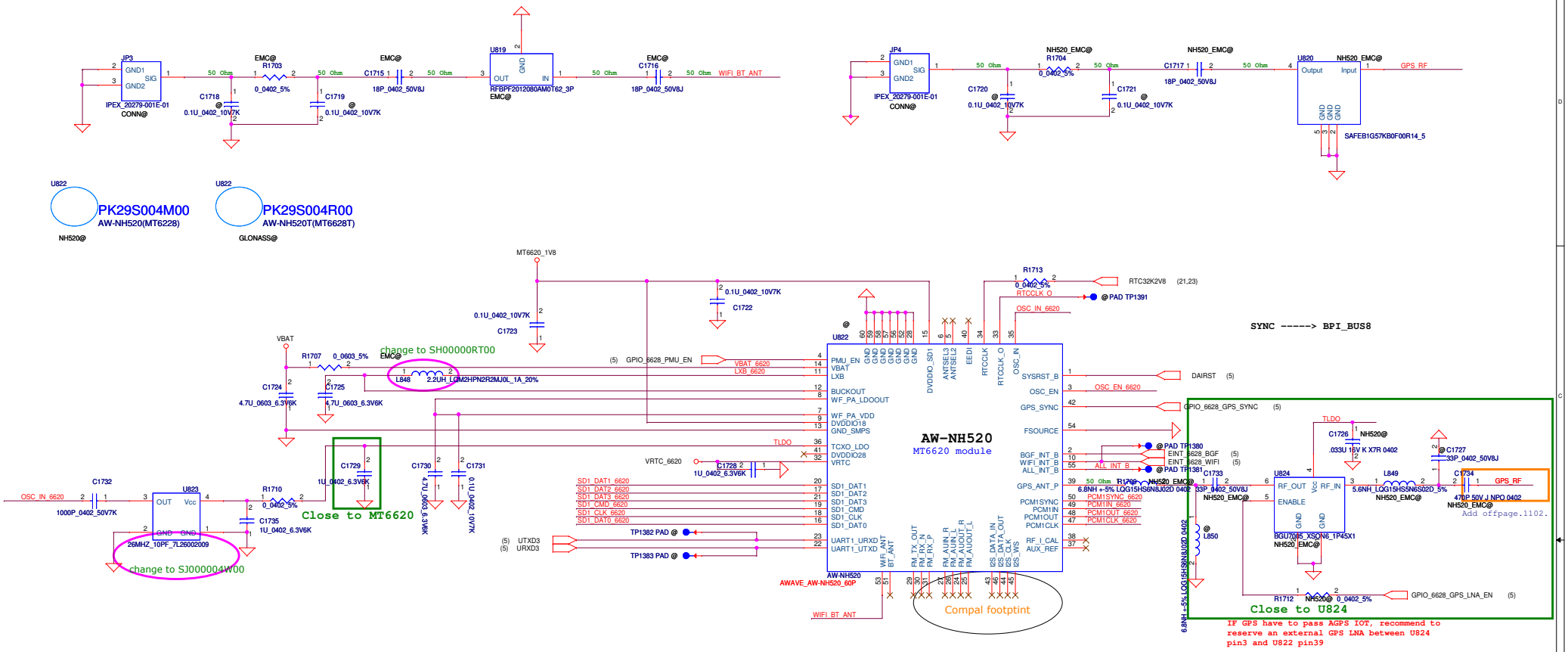

		XTEST	EEDI	ANTSEL_3	
clock setting	2.8V TCXO or OSC	0	0	0	Default
	1.8V TCXO or OSC	0	1	0	
	XTAL	0	0	1	
	external clock mode	0	1	1	

		XTEST	ANTSEL_2	ANTSEL_1	
WIFI host interface	WIFI :SDIO1	0	0	0	Default
	WIFI :SDIO2	0	0	1	
	WIFI :SPI	0	1	0	
	WIFI :reserved	0	1	1	

		XTEST	ANTSEL_0		
BT/common host interface	UART1	0	0		Default
	SDIO2	0	1		

Security Classification	Compal Secret Data		Compal Electronics, Inc.
Issued Date	2012/11/03	Deciphered Date 2013/11/03	Title BT, FM, GPS, WiFi (MT6628)
Size C	Document Number ZSJVV -LA-A401P		Rev 0.1
Date: Wednesday, April 17, 2013	Sheet 9 of 28		

THIS SHEET OF ENGINEERING DRAWING IS THE PROPRIETARY PROPERTY OF COMPAL ELECTRONICS, INC. AND CONTAINS CONFIDENTIAL AND TRADE SECRET INFORMATION. THIS SHEET MAY NOT BE TRANSFERED FROM THE CUSTODY OF THE COMPETENT DIVISION OF R&D DEPARTMENT EXCEPT AS AUTHORIZED BY COMPAL ELECTRONICS, INC. NEITHER THIS SHEET NOR THE INFORMATION IT CONTAINS MAY BE USED BY OR DISCLOSED TO ANY THIRD PARTY WITHOUT PRIOR WRITTEN CONSENT OF COMPAL ELECTRONICS, INC.

Sub Camera

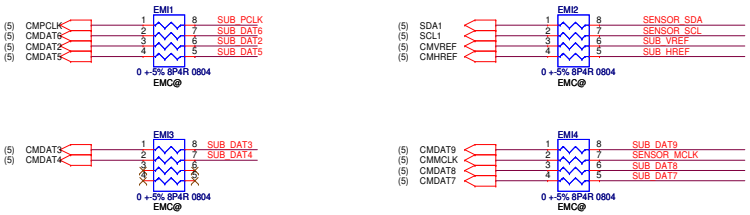

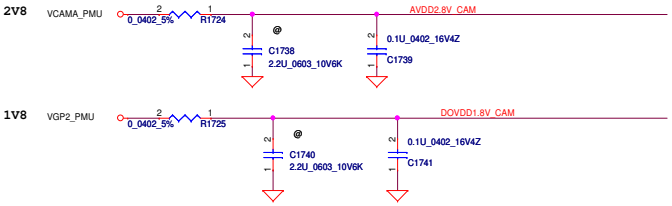

Acer reserve

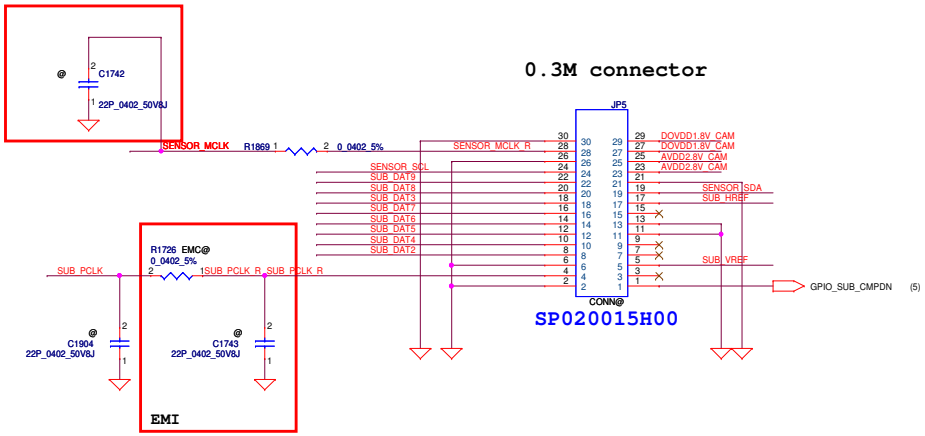

Security Classification	Compal Secret Data			Compal Electronics, Inc.
Issued Date	2012/11/03	Deciphered Date	2013/11/03	Title: Camera
				Size: C; Document Number: ZSJVV -LA-A401P; Rev: 0.1
				Date: Wednesday, April 17, 2013; Sheet 10 of 28

THIS SHEET OF ENGINEERING DRAWING IS THE PROPRIETARY PROPERTY OF COMPAL ELECTRONICS, INC. AND CONTAINS CONFIDENTIAL AND TRADE SECRET INFORMATION. THIS SHEET MAY NOT BE TRANSFERED FROM THE CUSTODY OF THE COMPETENT DIVISION OF R&D DEPARTMENT EXCEPT AS AUTHORIZED BY COMPAL ELECTRONICS, INC. NEITHER THIS SHEET NOR THE INFORMATION IT CONTAINS MAY BE USED BY OR DISCLOSED TO ANY THIRD PARTY WITHOUT PRIOR WRITTEN CONSENT OF COMPAL ELECTRONICS, INC.

Common Debug

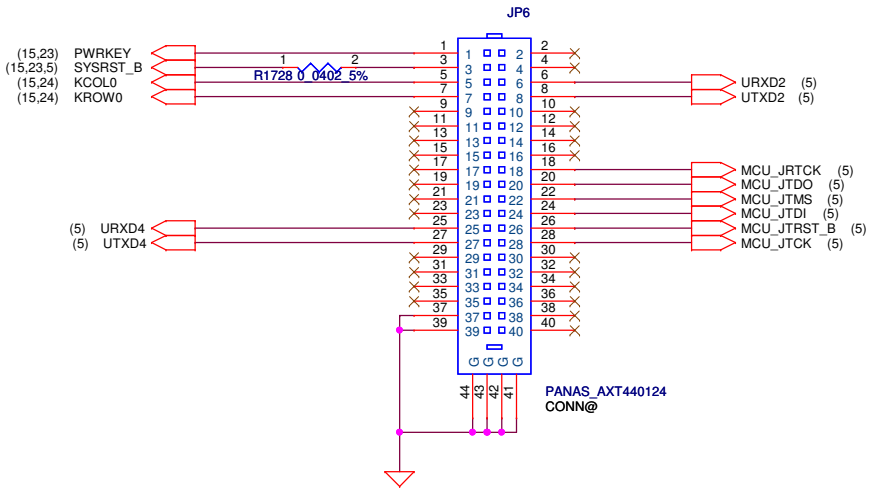

Security Classification	Compal Secret Data			Compal Electronics, Inc.
Issued Date	2012/11/03	Deciphered Date	2013/11/03	Title: SD Card,Debug,USB
				Size: B; Document Number: ZSJVV -LA-A401P; Rev: 0.1
				Date: Wednesday, April 17, 2013; Sheet 11 of 28

THIS SHEET OF ENGINEERING DRAWING IS THE PROPRIETARY PROPERTY OF COMPAL ELECTRONICS, INC. AND CONTAINS CONFIDENTIAL AND TRADE SECRET INFORMATION. THIS SHEET MAY NOT BE TRANSFERED FROM THE CUSTODY OF THE COMPETENT DIVISION OF R&D DEPARTMENT EXCEPT AS AUTHORIZED BY COMPAL ELECTRONICS, INC. NEITHER THIS SHEET NOR THE INFORMATION IT CONTAINS MAY BE USED BY OR DISCLOSED TO ANY THIRD PARTY WITHOUT PRIOR WRITTEN CONSENT OF COMPAL ELECTRONICS, INC.

G-Sensor

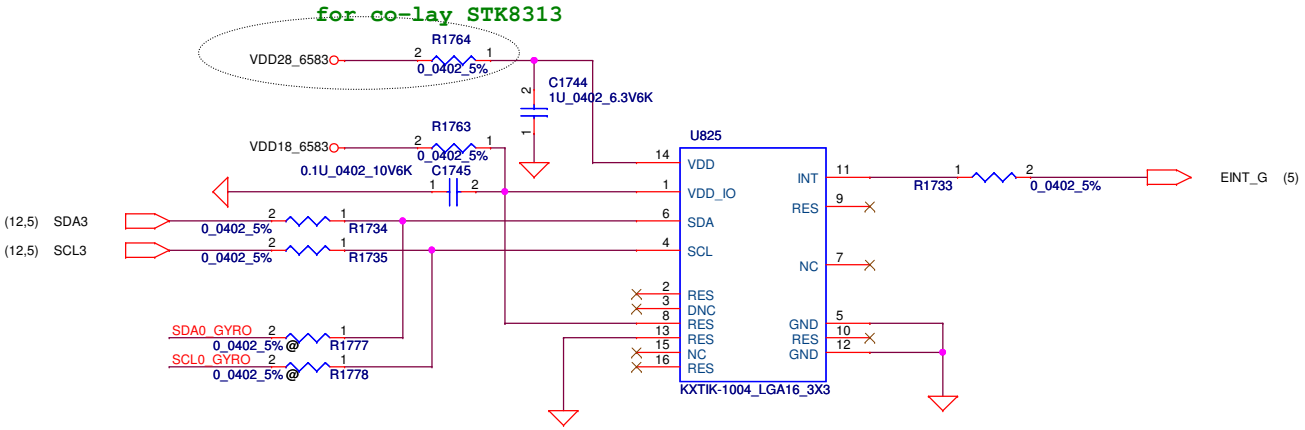

Gyro Sensor

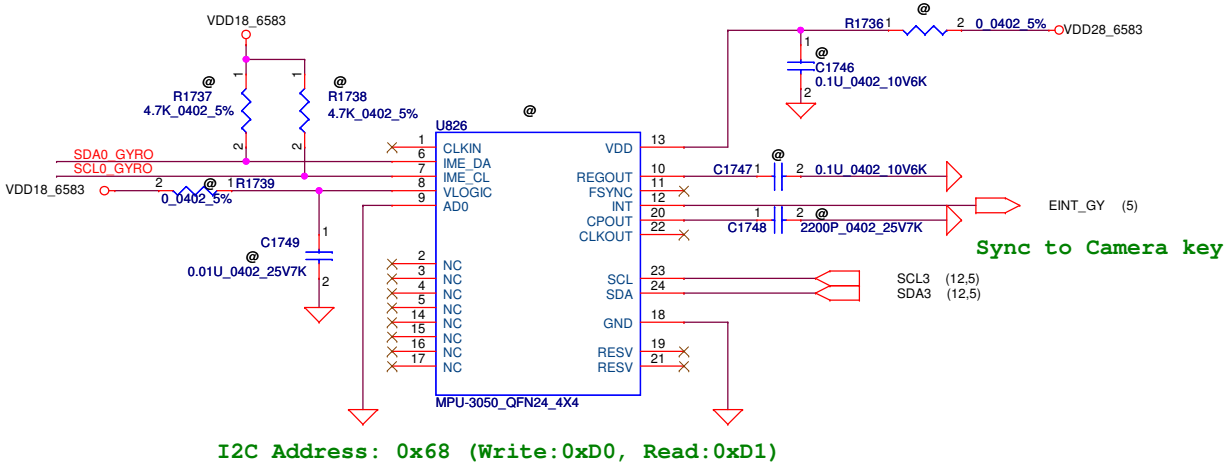

Security Classification	Compal Secret Data			Compal Electronics, Inc.
Issued Date	2012/11/03	Deciphered Date	2013/11/03	Title: Sensors
THIS SHEET OF ENGINEERING DRAWING IS THE PROPRIETARY PROPERTY OF COMPAL ELECTRONICS, INC. AND CONTAINS CONFIDENTIAL AND TRADE SECRET INFORMATION. THIS SHEET MAY NOT BE TRANSFERED FROM THE CUSTODY OF THE COMPETENT DIVISION OF R&D DEPARTMENT EXCEPT AS AUTHORIZED BY COMPAL ELECTRONICS, INC. NEITHER THIS SHEET NOR THE INFORMATION IT CONTAINS MAY BE USED BY OR DISCLOSED TO ANY THIRD PARTY WITHOUT PRIOR WRITTEN CONSENT OF COMPAL ELECTRONICS, INC.				Size: B / Document Number: ZSJVV -LA-A401P / Rev: 0.1
				Date: Wednesday, April 17, 2013 / Sheet 12 of 28

169 ball eMMC

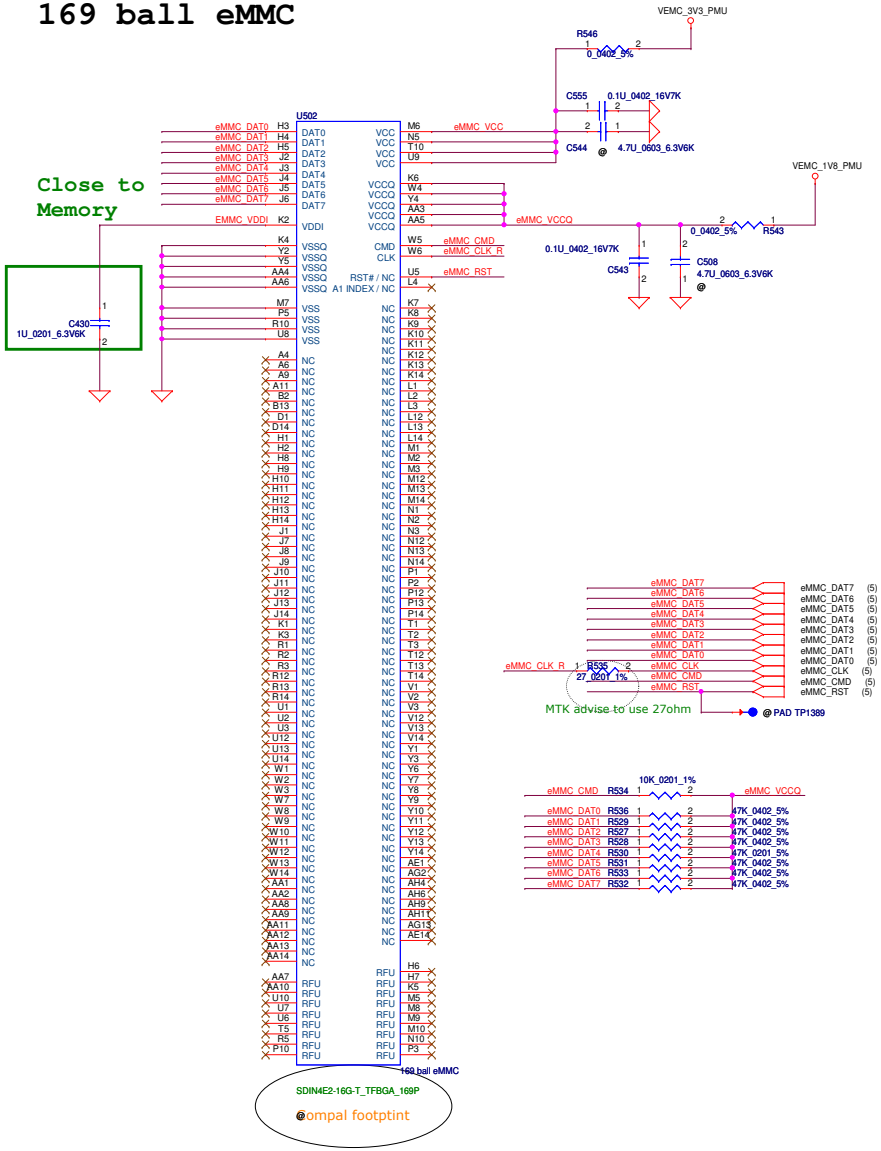

SCREW HOLE

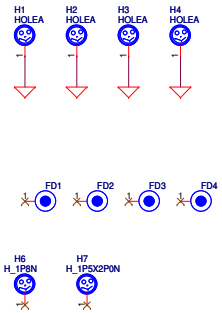

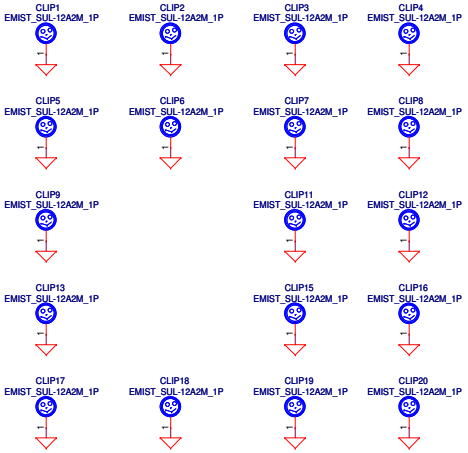

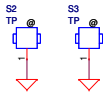

Security Classification	Compal Secret Data			Compal Electronics, Inc.
Issued Date	2012/11/03	Deciphered Date	2013/11/03	Title: eMMC, SCREW HOLE
				Size: C; Document Number: ZSJVV -LA-A401P; Rev: 0.1
				Date: Wednesday, April 17, 2013; Sheet 13 of 28

THIS SHEET OF ENGINEERING DRAWING IS THE PROPRIETARY PROPERTY OF COMPAL ELECTRONICS, INC. AND CONTAINS CONFIDENTIAL AND TRADE SECRET INFORMATION. THIS SHEET MAY NOT BE TRANSFERED FROM THE CUSTODY OF THE COMPETENT DIVISION OF R&D DEPARTMENT EXCEPT AS AUTHORIZED BY COMPAL ELECTRONICS, INC. NEITHER THIS SHEET NOR THE INFORMATION IT CONTAINS MAY BE USED BY OR DISCLOSED TO ANY THIRD PARTY WITHOUT PRIOR WRITTEN CONSENT OF COMPAL ELECTRONICS, INC.

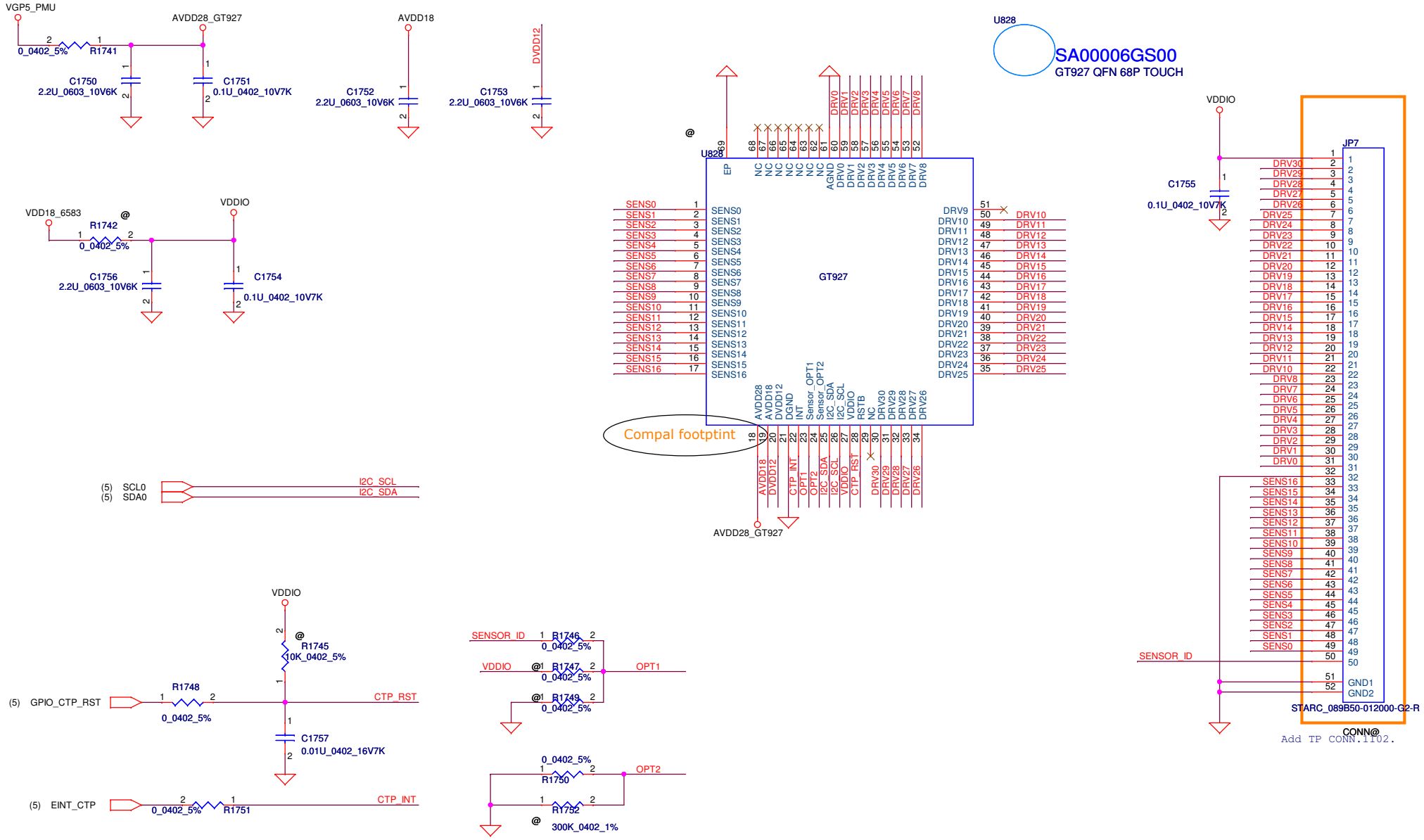

Security Classification	Compal Secret Data		
Issued Date	2012/11/03	Deciphered Date	2013/11/03

THIS SHEET OF ENGINEERING DRAWING IS THE PROPRIETARY PROPERTY OF COMPAL ELECTRONICS, INC. AND CONTAINS CONFIDENTIAL AND TRADE SECRET INFORMATION. THIS SHEET MAY NOT BE TRANSFERED FROM THE CUSTODY OF THE COMPETENT DIVISION OF R&D DEPARTMENT EXCEPT AS AUTHORIZED BY COMPAL ELECTRONICS, INC. NEITHER THIS SHEET NOR THE INFORMATION IT CONTAINS MAY BE USED BY OR DISCLOSED TO ANY THIRD PARTY WITHOUT PRIOR WRITTEN CONSENT OF COMPAL ELECTRONICS, INC.

Compal Electronics, Inc.

Title: Touch Panel

Size: B | Document Number: ZSJVV -LA-A401P | Rev: 0.1

Date: Wednesday, April 17, 2013 | Sheet 14 of 28

Power-on Button

MTK comment don't pull up R on PWRKEY.1101.

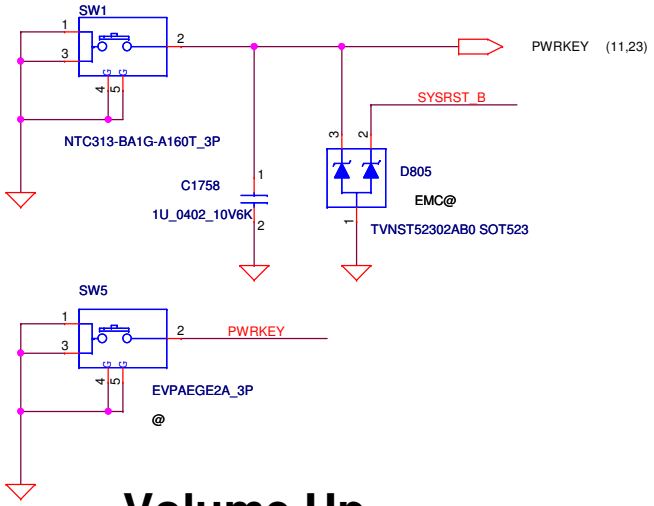

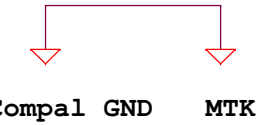

RESET

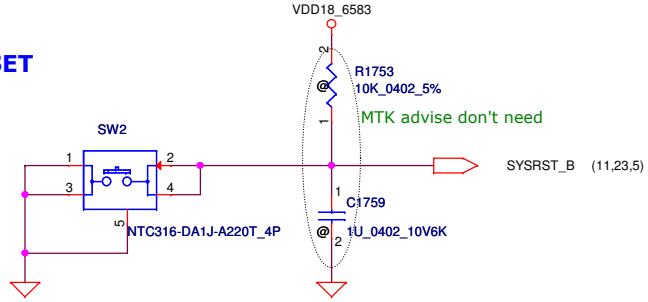

Volume Up (Download Key)

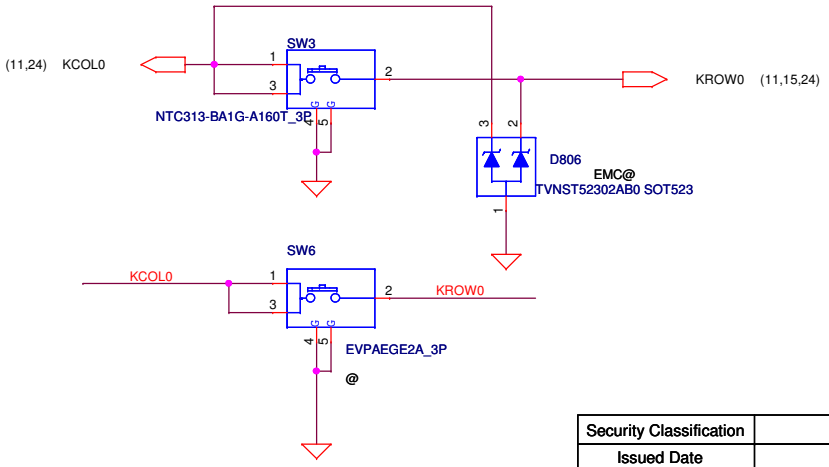

Volume Down

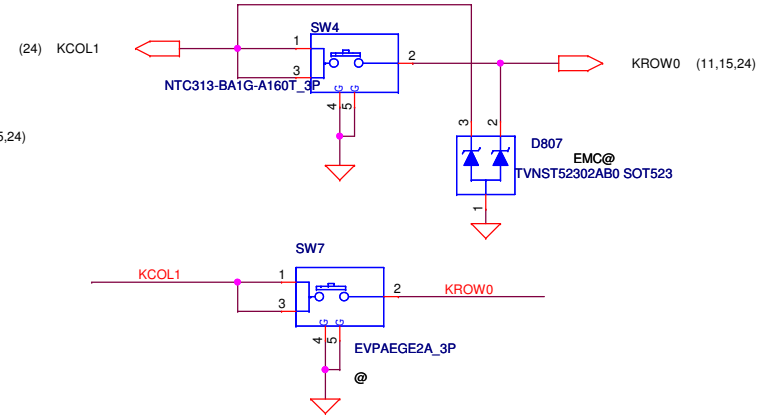

Security Classification	Compal Secret Data		
Issued Date	2012/11/03	Deciphered Date	2013/11/03

THIS SHEET OF ENGINEERING DRAWING IS THE PROPRIETARY PROPERTY OF COMPAL ELECTRONICS, INC. AND CONTAINS CONFIDENTIAL AND TRADE SECRET INFORMATION. THIS SHEET MAY NOT BE TRANSFERED FROM THE CUSTODY OF THE COMPETENT DIVISION OF R&D DEPARTMENT EXCEPT AS AUTHORIZED BY COMPAL ELECTRONICS, INC. NEITHER THIS SHEET NOR THE INFORMATION IT CONTAINS MAY BE USED BY OR DISCLOSED TO ANY THIRD PARTY WITHOUT PRIOR WRITTEN CONSENT OF COMPAL ELECTRONICS, INC.

Compal Electronics, Inc.

Title: Button

Size: B | Document Number: ZSJVV -LA-A401P | Rev: 0.1

Date: Wednesday, April 17, 2013 | Sheet 15 of 28

MIC

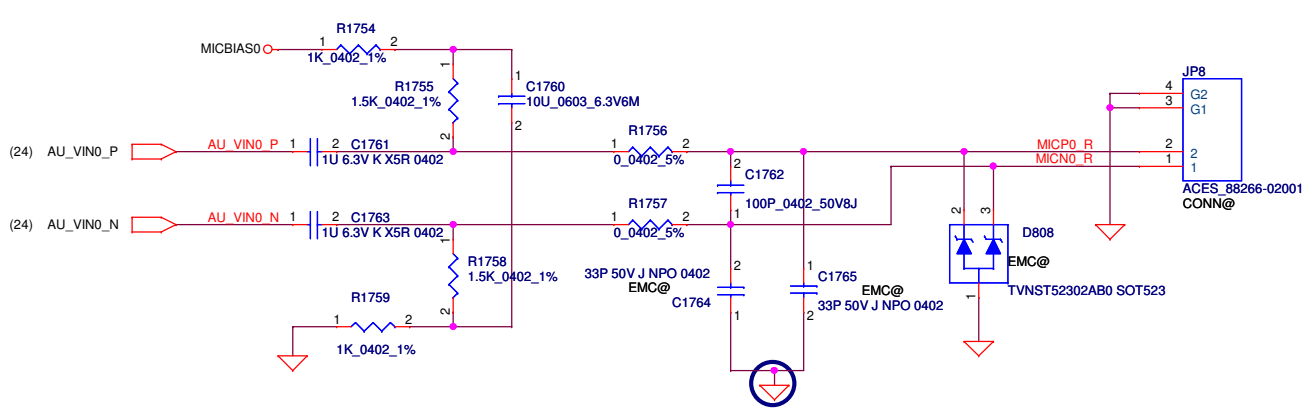

Compal GND MTK GND

Modify MIC CONN SCH.1102.

SPAKER

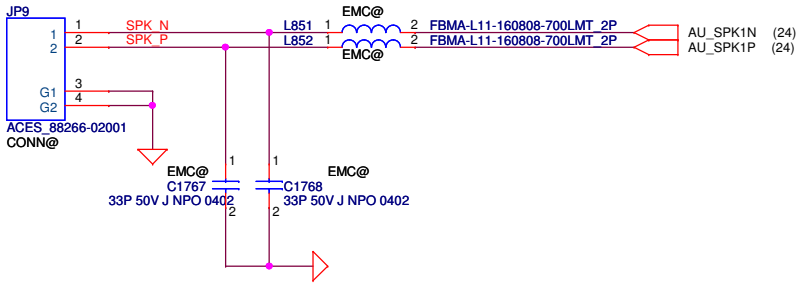

Vibrator

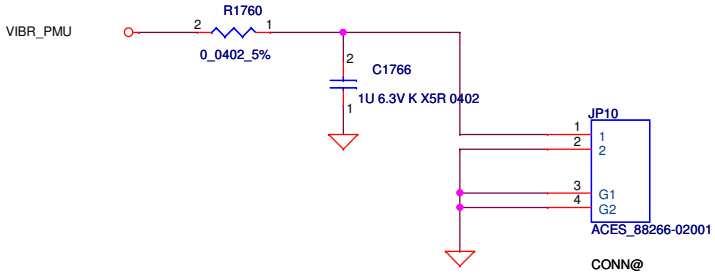

Security Classification	Compal Secret Data		
Issued Date	2012/11/03	Deciphered Date	2013/11/03

THIS SHEET OF ENGINEERING DRAWING IS THE PROPRIETARY PROPERTY OF COMPAL ELECTRONICS, INC. AND CONTAINS CONFIDENTIAL AND TRADE SECRET INFORMATION. THIS SHEET MAY NOT BE TRANSFERED FROM THE CUSTODY OF THE COMPETENT DIVISION OF R&D DEPARTMENT EXCEPT AS AUTHORIZED BY COMPAL ELECTRONICS, INC. NEITHER THIS SHEET NOR THE INFORMATION IT CONTAINS MAY BE USED BY OR DISCLOSED TO ANY THIRD PARTY WITHOUT PRIOR WRITTEN CONSENT OF COMPAL ELECTRONICS, INC.

Compal Electronics, Inc.

Title: Connector(MIC/SPK/HP)

Size: B | Document Number: ZSJVV -LA-A401P | Rev: 0.1

Date: Wednesday, April 17, 2013 | Sheet 16 of 28

Micro-USB

If mini-A connector insert => CID < 0V => Low
If mini-B connector insert => CID > 1.2V => High

IDPULLUP pin is replaced by 1.2V power source.

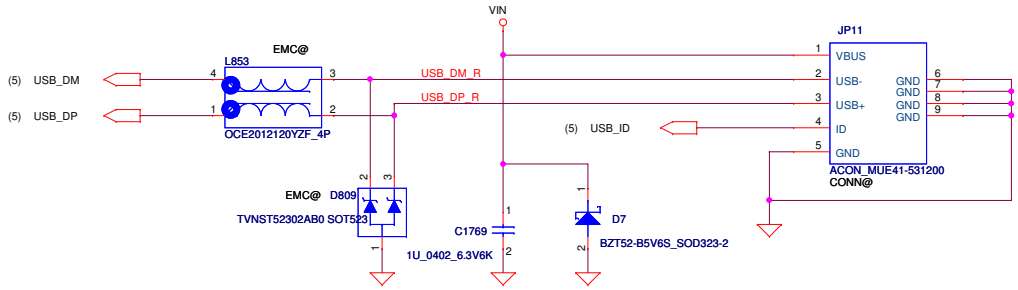

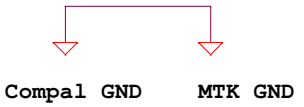

SD card

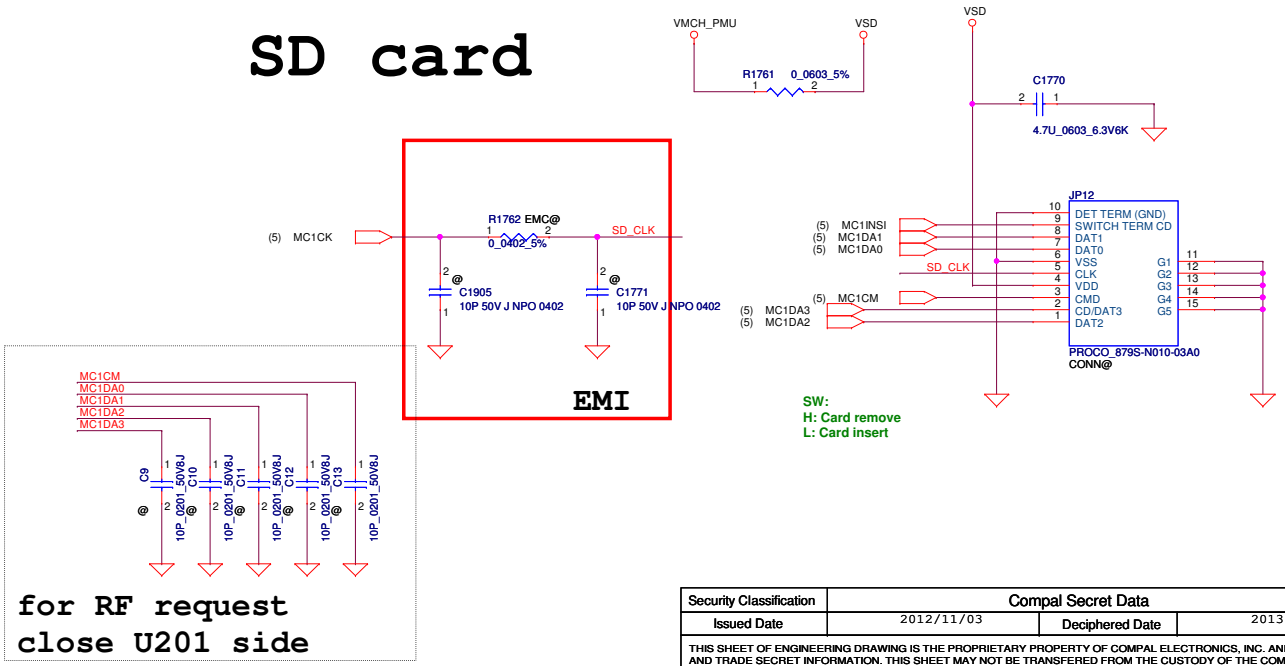

Security Classification	Compal Secret Data		Compal Electronics, Inc.
Issued Date	2012/11/03	Deciphered Date 2013/11/03	Title Connector-2(SD card/G-se)
THIS SHEET OF ENGINEERING DRAWING IS THE PROPRIETARY PROPERTY OF COMPAL ELECTRONICS, INC. AND CONTAINS CONFIDENTIAL AND TRADE SECRET INFORMATION. THIS SHEET MAY NOT BE TRANSFERED FROM THE CUSTODY OF THE COMPETENT DIVISION OF R&D DEPARTMENT EXCEPT AS AUTHORIZED BY COMPAL ELECTRONICS, INC. NEITHER THIS SHEET NOR THE INFORMATION IT CONTAINS MAY BE USED BY OR DISCLOSED TO ANY THIRD PARTY WITHOUT PRIOR WRITTEN CONSENT OF COMPAL ELECTRONICS, INC.			Size Custom / Document Number ZSJVV -LA-A401P / Rev 0.1
			Date: Wednesday, April 17, 2013 / Sheet 17 of 28

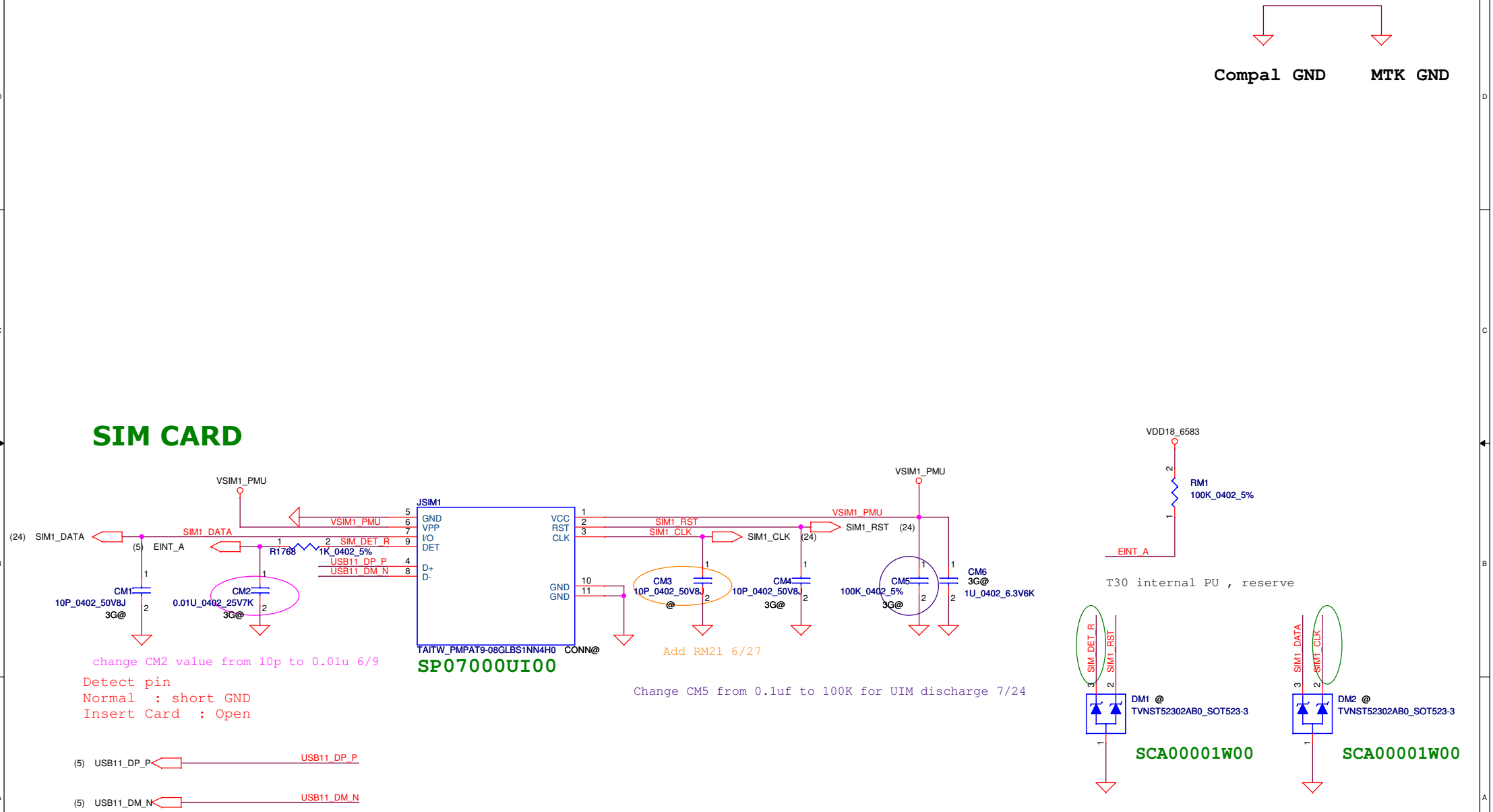

Security Classification	Compal Secret Data		
Issued Date	2012/11/03	Deciphered Date	2013/11/03

THIS SHEET OF ENGINEERING DRAWING IS THE PROPRIETARY PROPERTY OF COMPAL ELECTRONICS, INC. AND CONTAINS CONFIDENTIAL AND TRADE SECRET INFORMATION. THIS SHEET MAY NOT BE TRANSFERED FROM THE CUSTODY OF THE COMPETENT DIVISION OF R&D DEPARTMENT EXCEPT AS AUTHORIZED BY COMPAL ELECTRONICS, INC. NEITHER THIS SHEET NOR THE INFORMATION IT CONTAINS MAY BE USED BY OR DISCLOSED TO ANY THIRD PARTY WITHOUT PRIOR WRITTEN CONSENT OF COMPAL ELECTRONICS, INC.

Compal Electronics, Inc.

Title: SIM

Size: B | Document Number: ZSJVV -LA-A401P | Rev: 0.1

Date: Wednesday, April 17, 2013 | Sheet 18 of 28

	SKY13380	CTRL1	CTRL2	CTL	XM0831SZ
WS1940-1	switch path	RXD1	RXD2	RXD3	switch path
B2	ANT~RF1	L	L	X	X
B8	ANT~RF2	L	H	L	RF1~RF2
B1	ANT~RF3	H	L	X	X
B5	ANT~RF4	H	H	H	RF1~RF3

SP4T Control Truth Table_SKY13380

	Vct1	Vct2
RF1	L	L
RF2	L	H
RF3	H	L
RF4	H	H

Note : Use RX Co-banding
GSM850 = 3G B5
GSM900 = 3G B8
GSM1900= 3G B2

RXD3 H= 1->3

C646 need updat P/N

R604 close to 3G PA

Note : VXODIG
VXODIG = VIO18 ==> (VCTCXO or DCXO) + 32K XO
VXODIG = VTCXO28 ==> DCXO + 32K Less

Note : Xmode
Xmode = 0 ==> VCTCXO + 32K XO
Xmode = 1(VIO18) ==> DCXO + 32K XO
Xmode = 1(VTCX28) ==> DCXO + 32K Less

Note : EN32k (2012/02/08, Checked PMU POR)
EN32k = 0 ==> MT6320 is 32K XO
EN32k = 1(VTCXO28) ==> MT6320 is 32K Less

Reserved LC filter

Place close X604 side

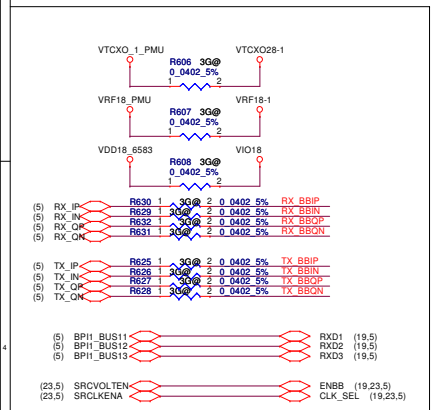

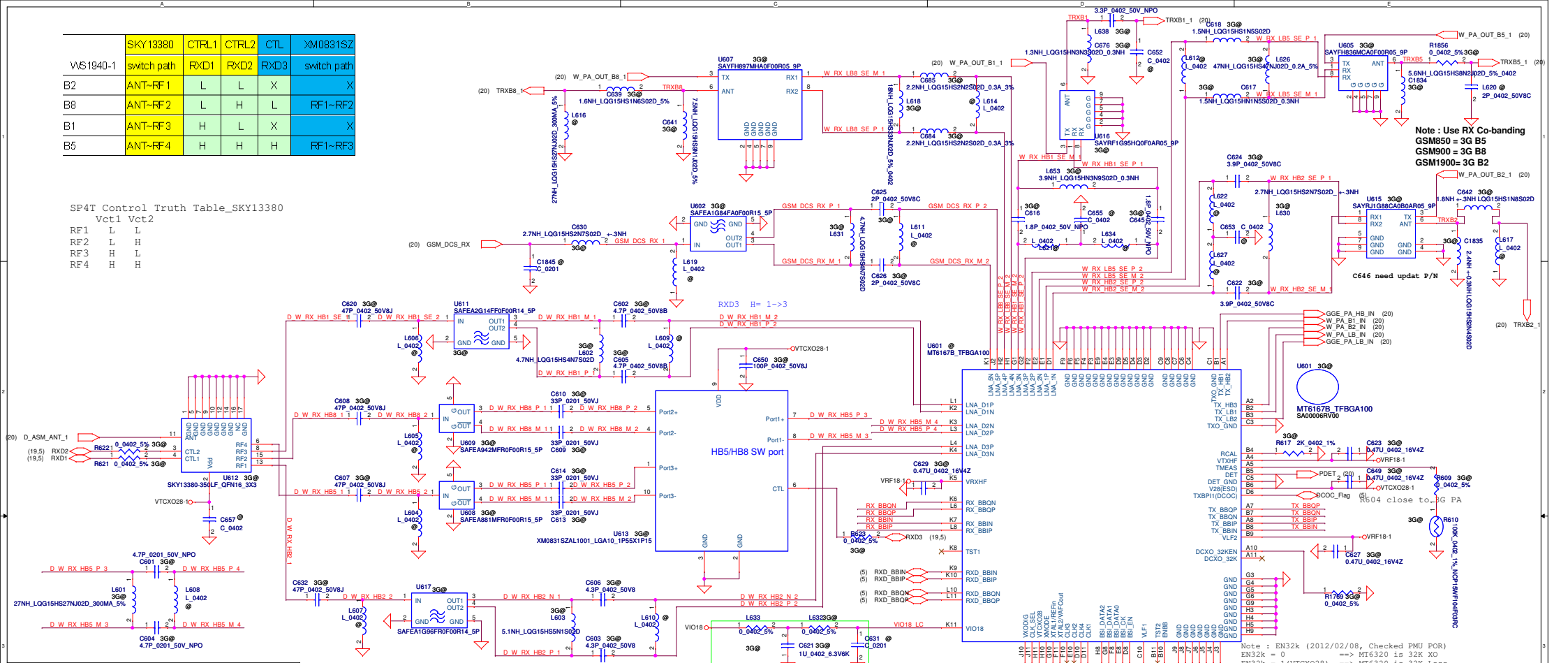

Security Classification	Compal Secret Data		
Issued Date	2013/01/30	Deciphered Date	2014/01/30

Title: *Compal Electronics, Inc.* — *RF_MT6167_RX_B1B8*

Size: Custom | Document Number: *ZSJVV -LA-A401P* | Rev: 0.1

Date: Wednesday, April 17, 2013 | Sheet 19 of 28

THIS SHEET OF ENGINEERING DRAWING IS THE PROPRIETARY PROPERTY OF COMPAL ELECTRONICS, INC. AND CONTAINS CONFIDENTIAL AND TRADE SECRET INFORMATION. THIS SHEET MAY NOT BE TRANSFERED FROM THE CUSTODY OF THE COMPETENT DIVISION OF R&D DEPARTMENT EXCEPT AS AUTHORIZED BY COMPAL ELECTRONICS, INC. NEITHER THIS SHEET NOR THE INFORMATION IT CONTAINS MAY BE USED BY OR DISCLOSED TO ANY THIRD PARTY WITHOUT PRIOR WRITTEN CONSENT OF COMPAL ELECTRONICS, INC.

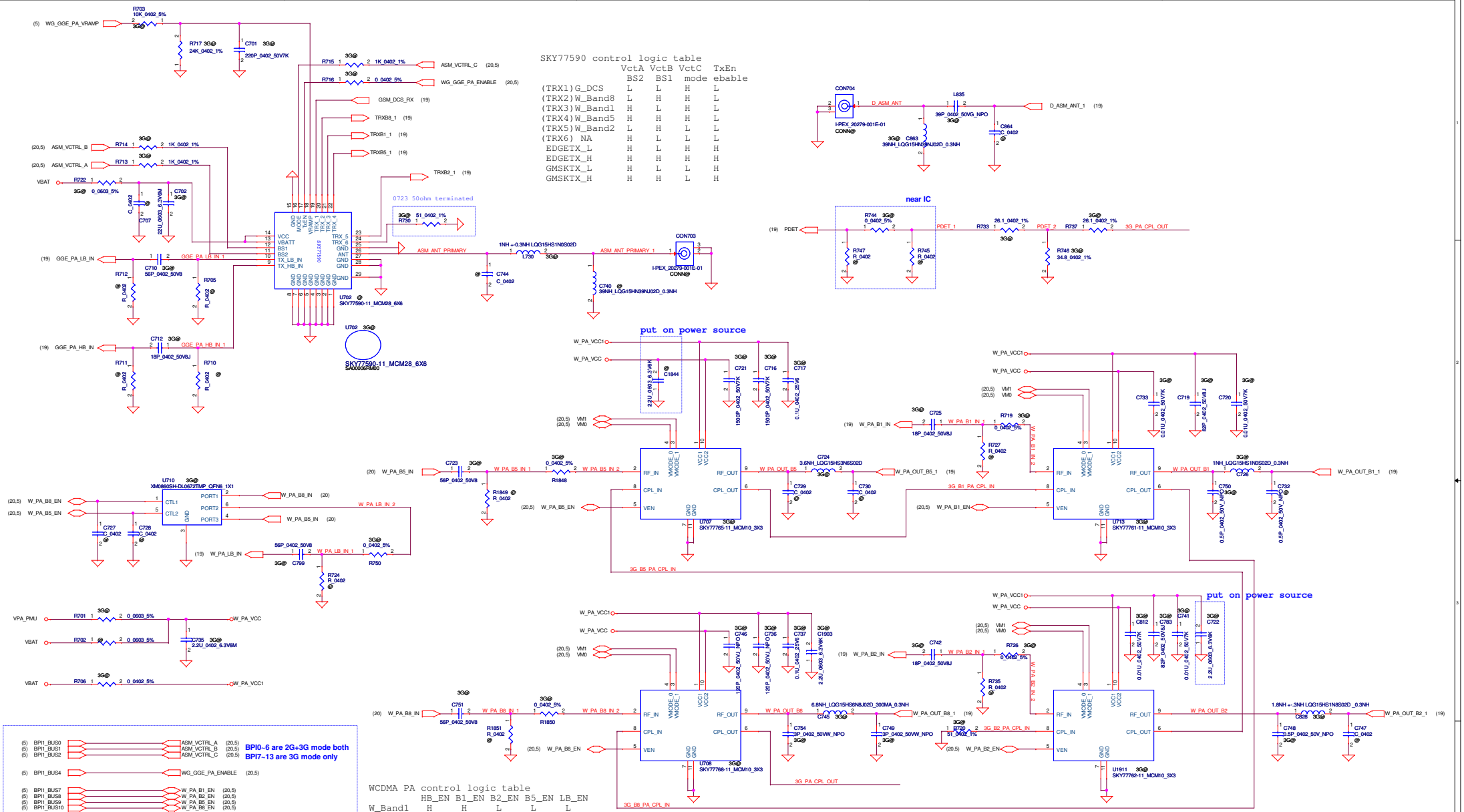

Security Classification	Compal Secret Data		
Issued Date	2012/11/09	Deciphered Date	2014/11/09

THIS SHEET OF ENGINEERING DRAWING IS THE PROPRIETARY PROPERTY OF COMPAL ELECTRONICS, INC. AND CONTAINS CONFIDENTIAL AND TRADE SECRET INFORMATION. THIS SHEET MAY NOT BE TRANSFERED FROM THE CUSTODY OF THE COMPETENT DIVISION OF R&D DEPARTMENT EXCEPT AS AUTHORIZED BY COMPAL ELECTRONICS, INC. NEITHER THIS SHEET NOR THE INFORMATION IT CONTAINS MAY BE USED BY OR DISCLOSED TO ANY THIRD PARTY WITHOUT PRIOR WRITTEN CONSENT OF COMPAL ELECTRONICS, INC.

Compal Electronics, Inc.

Title: **RF_TX_ASM**

Document Number: **ZSJVV -LA-A401P** Rev: 0.1

Date: Wednesday, April 17, 2013 Sheet 20 of 28

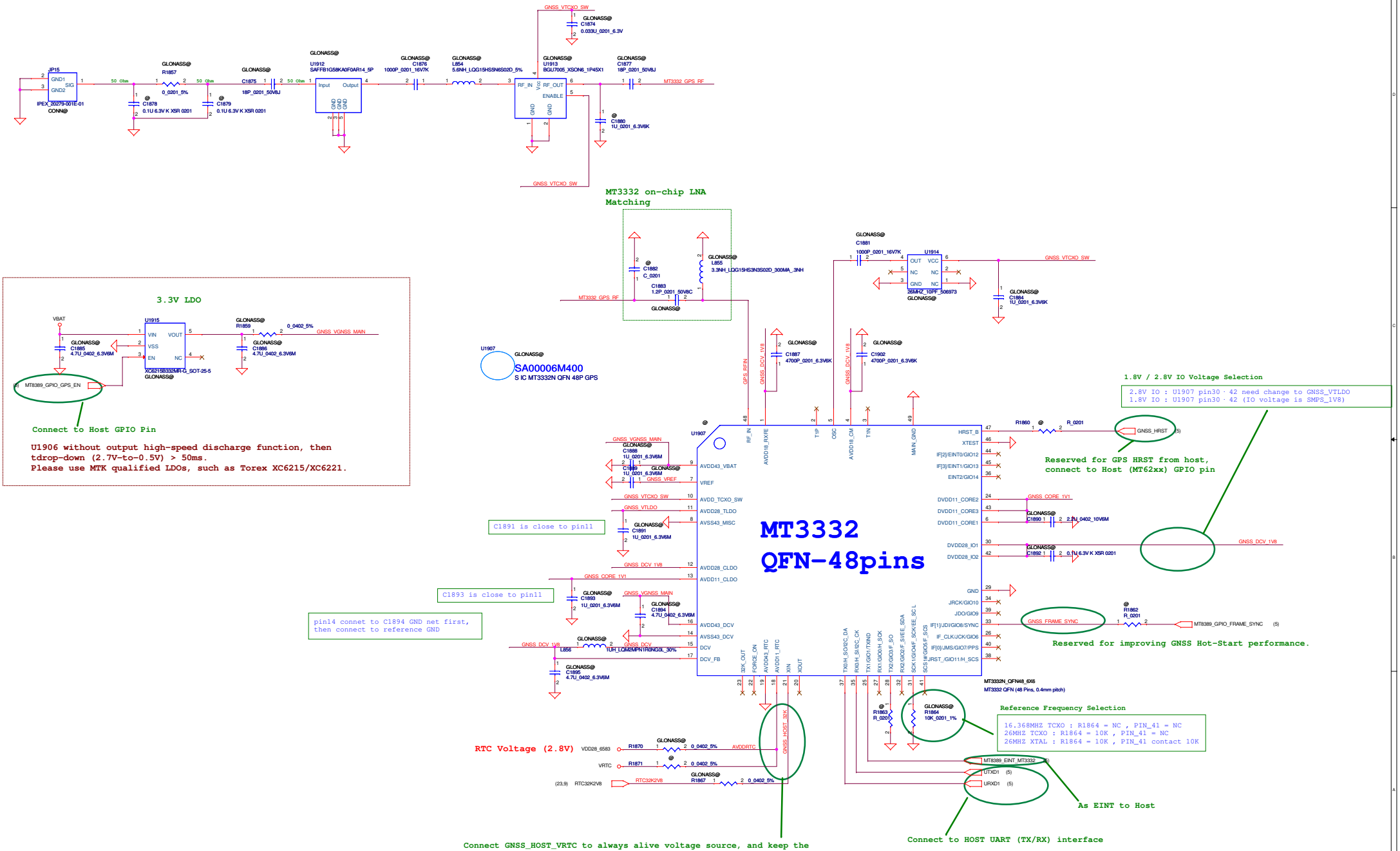

Security Classification	Compal Secret Data			Compal Electronics, Inc.
Issued Date	2012/11/09	Deciphered Date	2014/11/09	Title: MT3332

THIS SHEET OF ENGINEERING DRAWING IS THE PROPRIETARY PROPERTY OF COMPAL ELECTRONICS, INC. AND CONTAINS CONFIDENTIAL AND TRADE SECRET INFORMATION. THIS SHEET MAY NOT BE TRANSFERED FROM THE CUSTODY OF THE COMPETENT DIVISION OF R&D DEPARTMENT EXCEPT AS AUTHORIZED BY COMPAL ELECTRONICS, INC. NEITHER THIS SHEET NOR THE INFORMATION IT CONTAINS MAY BE USED BY OR DISCLOSED TO ANY THIRD PARTY WITHOUT PRIOR WRITTEN CONSENT OF COMPAL ELECTRONICS, INC.

Document Number	Rev
ZSJVV -LA-A401P	0.1

Date: Wednesday, April 17, 2013 | Sheet 21 of 28

Charger

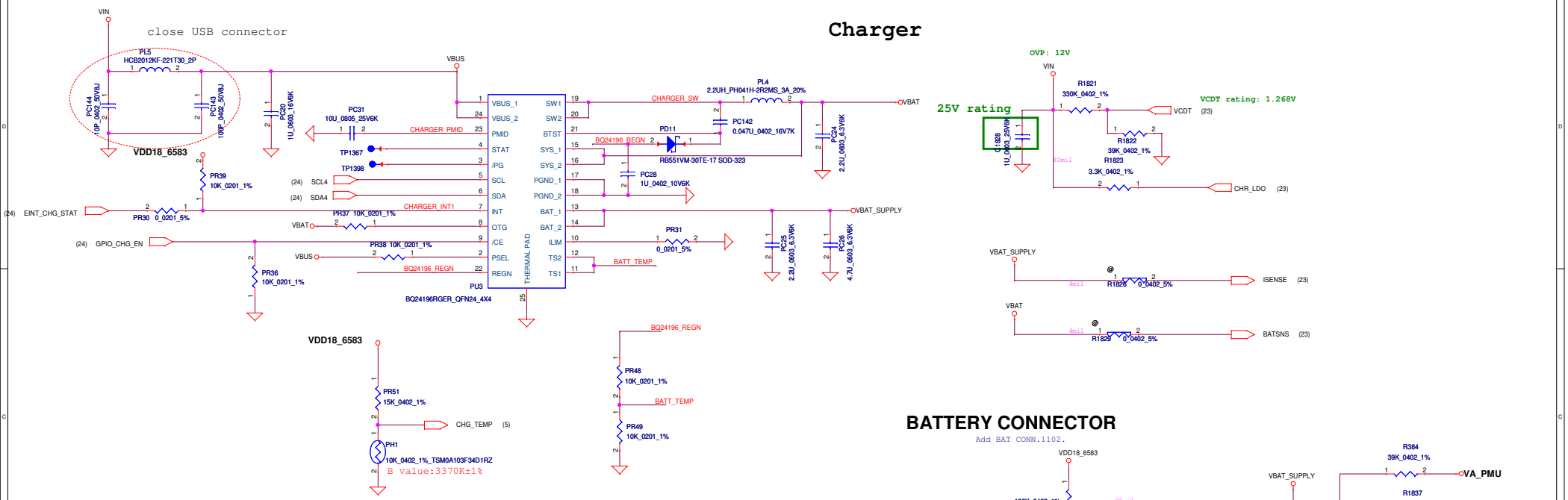

BATTERY CONNECTOR

Add BAT CONN.1102.

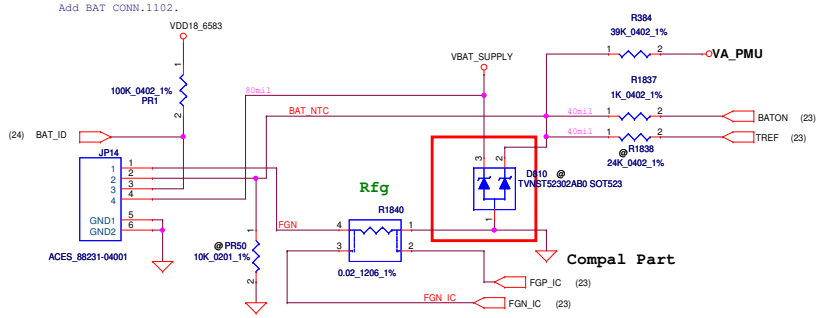

Security Classification	Compal Secret Data			Compal Electronics, Inc.
Issued Date	2012/11/03	Deciphered Date	2013/11/03	Title: Charger
				Size: C; Document Number: LA-031P; Rev: 0.1
				Date: Wednesday, April 17, 2013; Sheet 22 of 28

THIS SHEET OF ENGINEERING DRAWING IS THE PROPRIETARY PROPERTY OF COMPAL ELECTRONICS, INC. AND CONTAINS CONFIDENTIAL AND TRADE SECRET INFORMATION. THIS SHEET MAY NOT BE TRANSFERED FROM THE CUSTODY OF THE COMPETENT DIVISION OF R&D DEPARTMENT EXCEPT AS AUTHORIZED BY COMPAL ELECTRONICS, INC. NEITHER THIS SHEET NOR THE INFORMATION IT CONTAINS MAY BE USED BY OR DISCLOSED TO ANY THIRD PARTY WITHOUT PRIOR WRITTEN CONSENT OF COMPAL ELECTRONICS, INC.

PMIC

	LPDDR2/1.2V	DDR3U/1.25V	DDR3L/1.35V	DDR3/1.5V
VMSEL2	L	L	H	H
VMSEL1	L	H	L	H

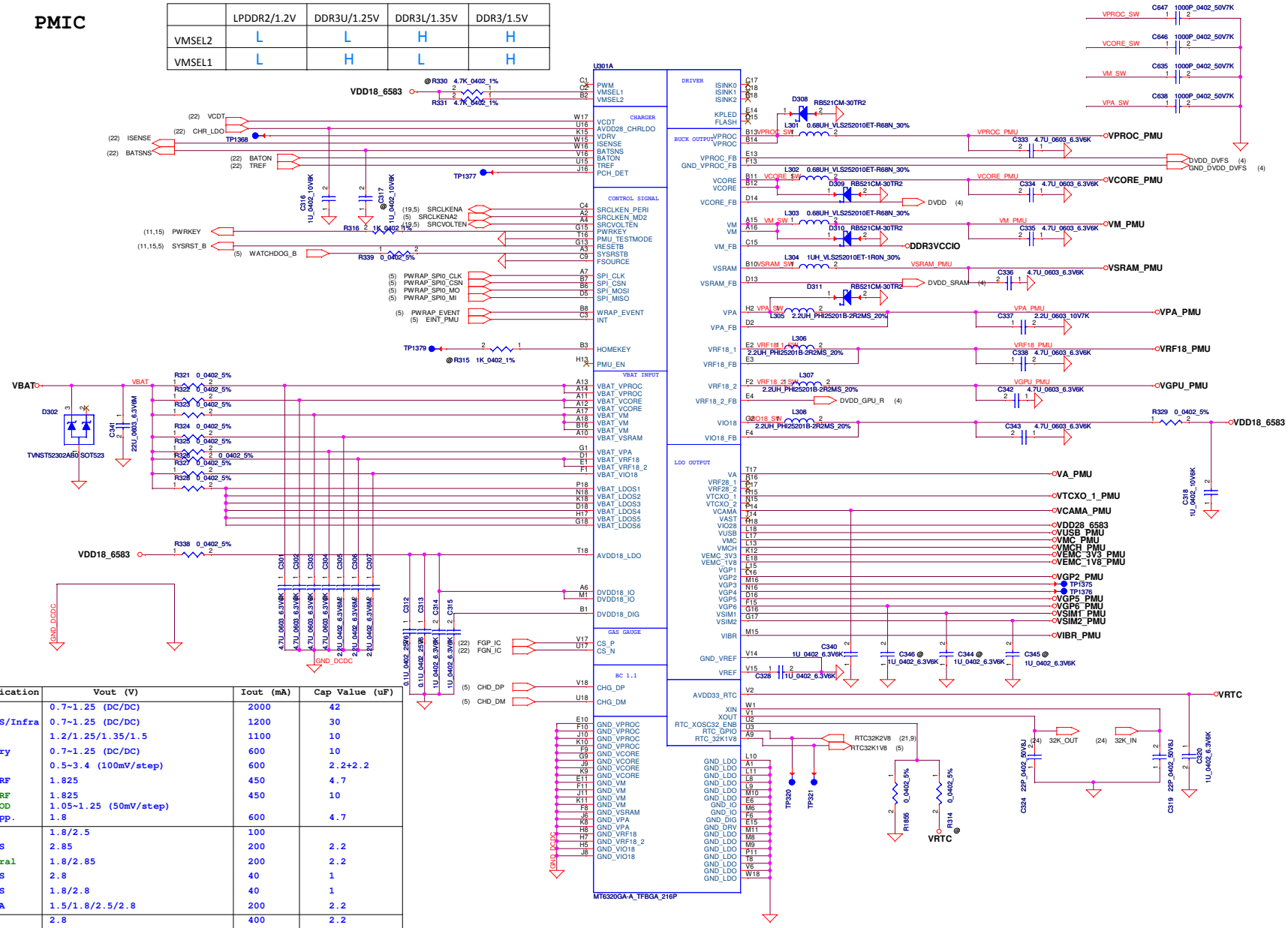

	Symbol	Application	Vout (V)	Iout (mA)	Cap Value (uF)
Buck	VPROC	CPU	0.7~1.25 (DC/DC)	2000	42
	VCORE	MDSYS/Infra	0.7~1.25 (DC/DC)	1200	30
	VM	VM	1.2/1.25/1.35/1.5	1100	10
	VSRAM	Memory	0.7~1.25 (DC/DC)	600	10
	VPA	3GPA	0.5~3.4 (100mV/step)	600	2.2+2.2
	VRF18	1st RF	1.825	450	4.7
	VRF18_2	2nd RF	1.825	450	10
		GPU OD	1.05~1.25 (50mV/step)		
	VIO18	IO App.	1.8	600	4.7
Analog LDO	VA		1.8/2.5	100	
	VRF28_1	MDSYS	2.85	200	2.2
	VRF28_2	General	1.8/2.85	200	2.2
	VTCXO_1	MDSYS	2.8	40	1
	VTCXO_2	MDSYS	1.8/2.8	40	1
	VCAMA	VCAMA	1.5/1.8/2.5/2.8	200	2.2
Digital LDO	VIO28		2.8	400	2.2
	VAST	MT6168	0.9/1.0/1.1/1.2	300	2.2
	VUSB		3.3	200	1
	VMC	T-Card	1.8/3.3	200	1
	VMCH	T-Card	3.0/3.3	800	4.7
	VEMC_3V3	eMMC (Core)	3.0/3.3	800	4.7
	VEMC_1V8	eMMC	1.2/1.3/1.5/1.8/2.5/2.8/3.0/3.3	200	2.2
	VGP1	VCAMD	1.2/1.3/1.5/1.8/2.5/2.8/3.0/3.3	400	2.2
	VGP2	VCAM_IO	1.2/1.3/1.5/1.8/2.5/2.8/3.0/3.3	200	1
	VGP3	VCAM_AF	1.2/1.3/1.5/1.8/2.5/2.8/3.0/3.3	200	1
	VGP4	CTP/CMMB	1.2/1.3/1.5/1.8/2.5/2.8/3.0/3.3	200	1
	VGP5	CTP/CMMB	1.2/1.3/1.5/1.8/2.5/2.8/3.0/3.3	200	1
	VGP6	CTP/CMMB	1.2/1.3/1.5/1.8/2.5/2.8/3.0/3.3	200	1
	VSIM1	VSIM1	1.2/1.3/1.5/1.8/2.5/2.8/3.0/3.3	200	1
	VSIM2	VSIM2	1.2/1.3/1.5/1.8/2.5/2.8/3.0/3.3	200	1
Vibrator	VIBR	Vibrator	1.2/1.3/1.5/1.8/2.5/2.8/3.0/3.3	200	1
RTC	VRTC	RTC Block	2.8	2	1~22

Security Classification	Compal Secret Data		
Issued Date	2012/11/03	Deciphered Date	2013/11/03

THIS SHEET OF ENGINEERING DRAWING IS THE PROPRIETARY PROPERTY OF COMPAL ELECTRONICS, INC. AND CONTAINS CONFIDENTIAL AND TRADE SECRET INFORMATION. THIS SHEET MAY NOT BE TRANSFERED FROM THE CUSTODY OF THE COMPETENT DIVISION OF R&D DEPARTMENT EXCEPT AS AUTHORIZED BY COMPAL ELECTRONICS, INC. NEITHER THIS SHEET NOR THE INFORMATION IT CONTAINS MAY BE USED BY OR DISCLOSED TO ANY THIRD PARTY WITHOUT PRIOR WRITTEN CONSENT OF COMPAL ELECTRONICS, INC.

Compal Electronics, Inc.

Title: MT6329 PMIC

Size: Custom | Document Number: LA-A031P | Rev: 0.1

Date: Wednesday, April 17, 2013 | Sheet 23 of 28

PMIC

Digital

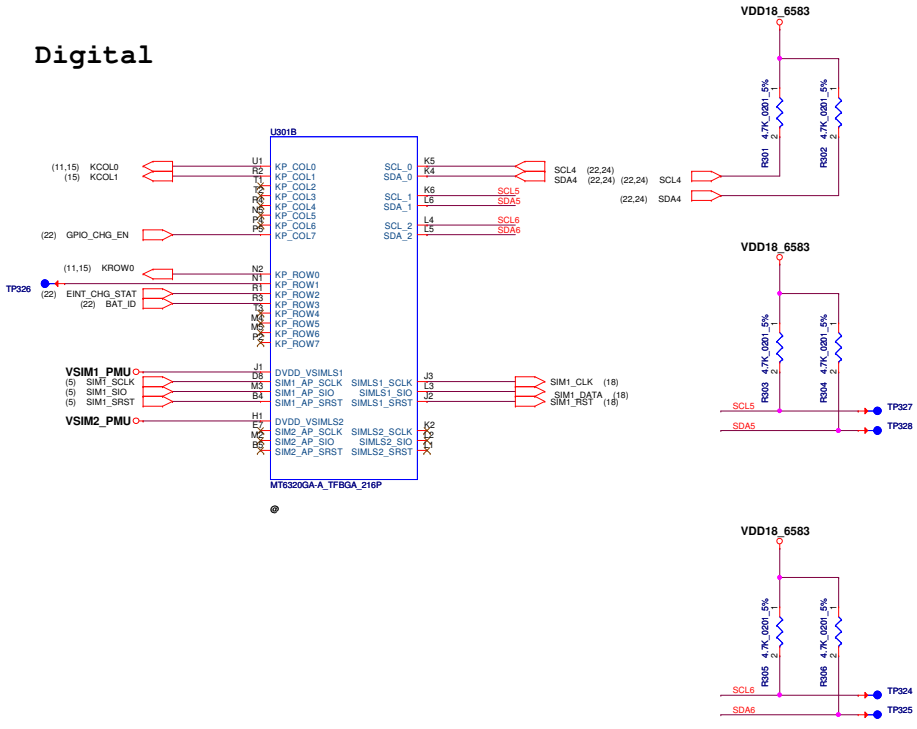

Audio

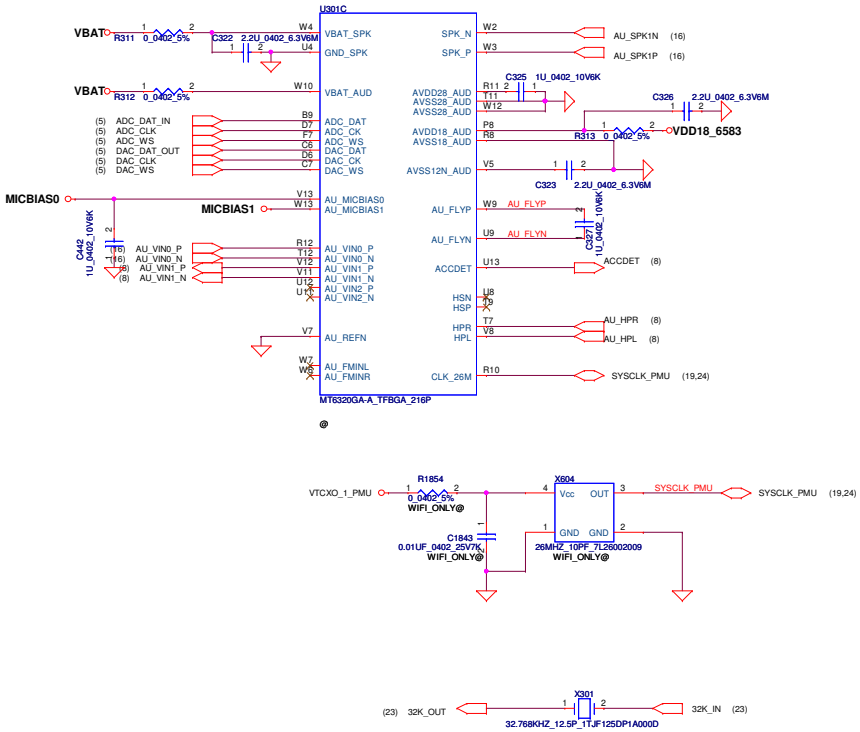

Security Classification	Compal Secret Data		
Issued Date	2012/11/03	Deciphered Date	2013/11/03

THIS SHEET OF ENGINEERING DRAWING IS THE PROPRIETARY PROPERTY OF COMPAL ELECTRONICS, INC. AND CONTAINS CONFIDENTIAL AND TRADE SECRET INFORMATION. THIS SHEET MAY NOT BE TRANSFERED FROM THE CUSTODY OF THE COMPETENT DIVISION OF R&D DEPARTMENT EXCEPT AS AUTHORIZED BY COMPAL ELECTRONICS, INC. NEITHER THIS SHEET NOR THE INFORMATION IT CONTAINS MAY BE USED BY OR DISCLOSED TO ANY THIRD PARTY WITHOUT PRIOR WRITTEN CONSENT OF COMPAL ELECTRONICS, INC.

Compal Electronics, Inc.

Title: MT6329 PMIC

Size: Custom | Document Number: LA-A031P | Rev: 0.1

Date: Wednesday, April 17, 2013 | Sheet 24 of 28

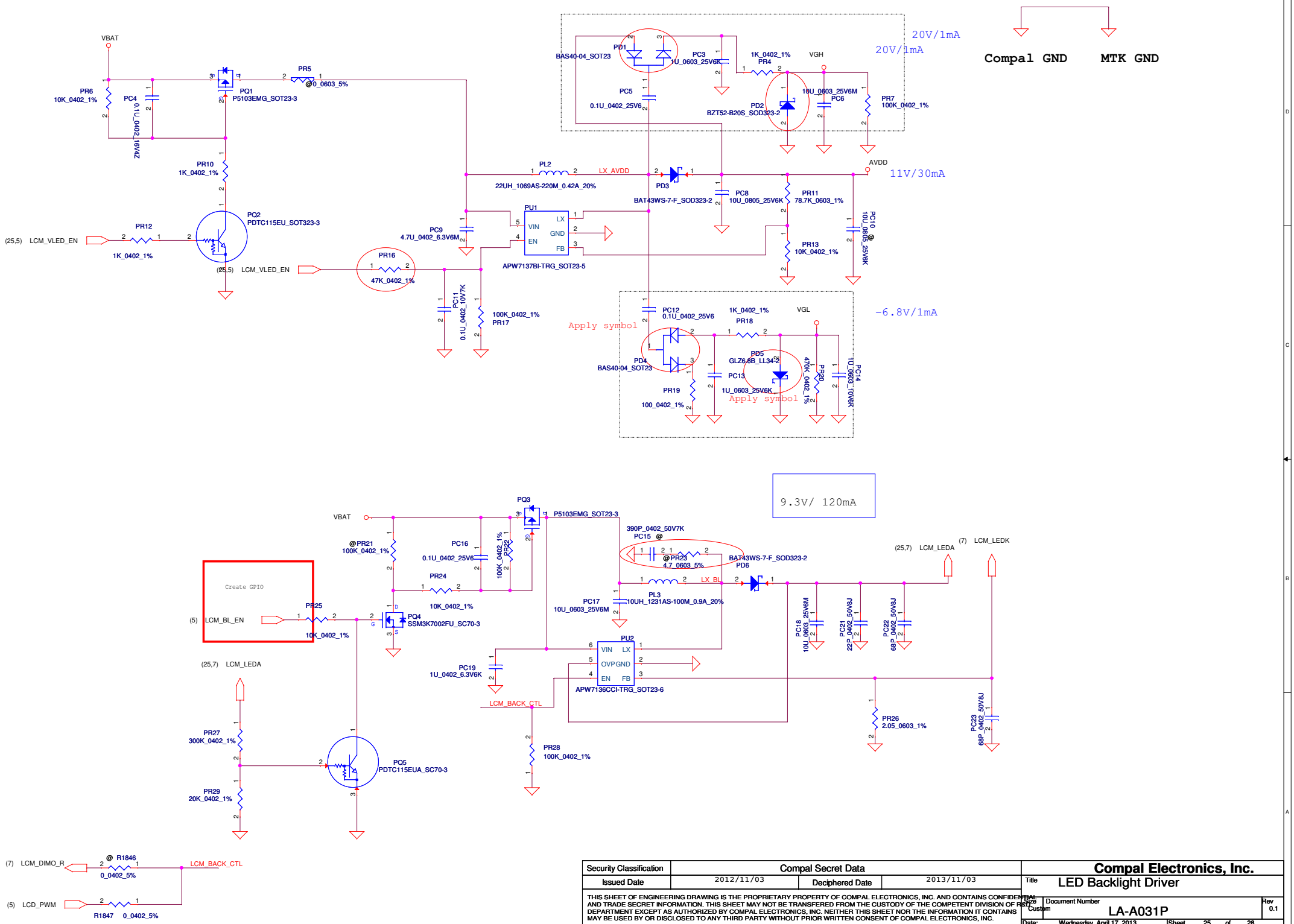

Security Classification	Compal Secret Data			Compal Electronics, Inc.
Issued Date	2012/11/03	Deciphered Date	2013/11/03	Title: LED Backlight Driver

THIS SHEET OF ENGINEERING DRAWING IS THE PROPRIETARY PROPERTY OF COMPAL ELECTRONICS, INC. AND CONTAINS CONFIDENTIAL AND TRADE SECRET INFORMATION. THIS SHEET MAY NOT BE TRANSFERED FROM THE CUSTODY OF THE COMPETENT DIVISION OF R&D DEPARTMENT EXCEPT AS AUTHORIZED BY COMPAL ELECTRONICS, INC. NEITHER THIS SHEET NOR THE INFORMATION IT CONTAINS MAY BE USED BY OR DISCLOSED TO ANY THIRD PARTY WITHOUT PRIOR WRITTEN CONSENT OF COMPAL ELECTRONICS, INC.

Size	Document Number	Rev
Custom	LA-A031P	0.1

Date: Wednesday, April 17, 2013 Sheet 25 of 28

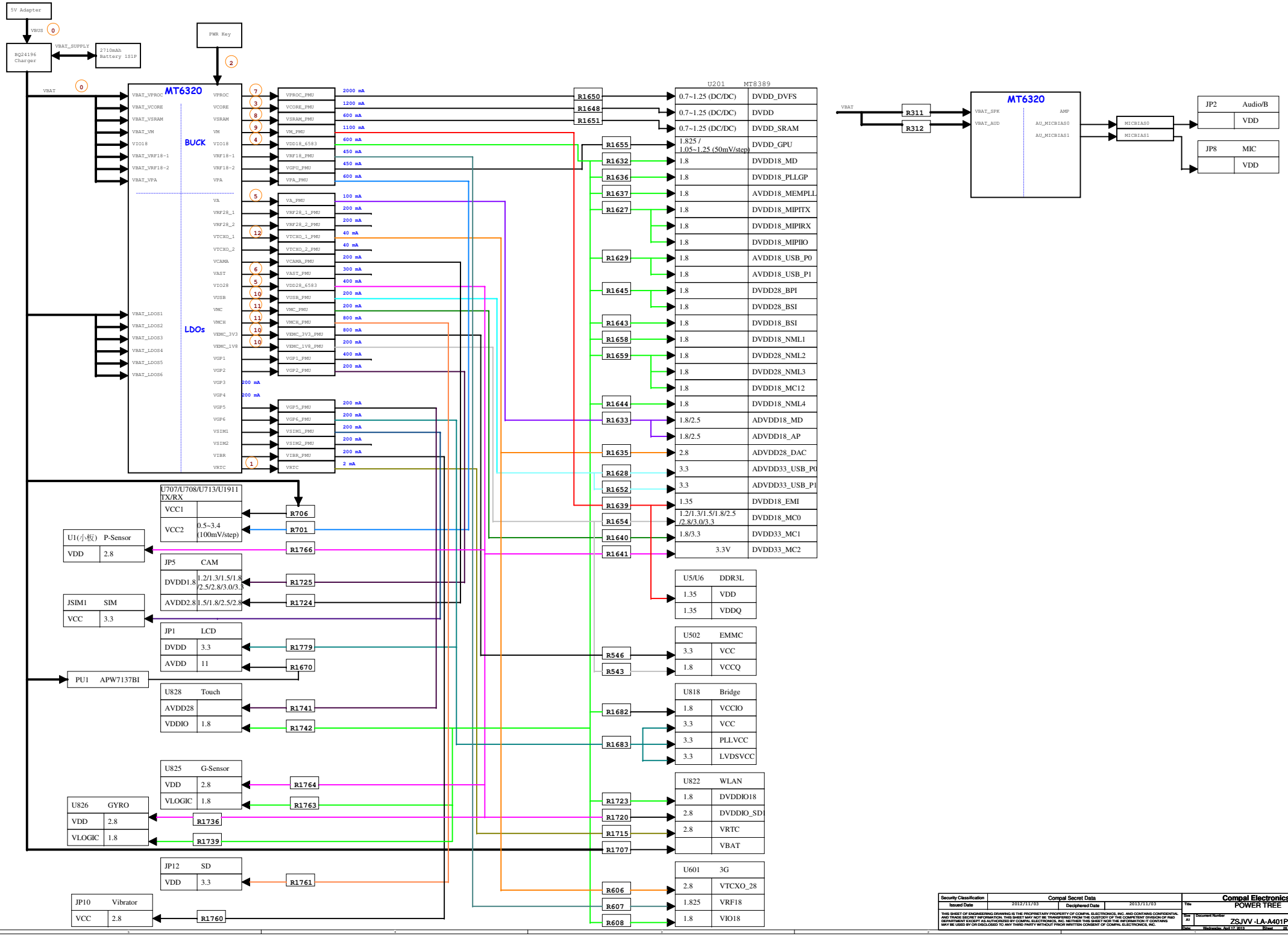

Security Classification	Compal Secret Data		
Issued Date	2012/11/03	Deciphered Date	2013/11/03

THIS SHEET OF ENGINEERING DRAWING IS THE PROPRIETARY PROPERTY OF COMPAL ELECTRONICS, INC. AND CONTAINS CONFIDENTIAL AND TRADE SECRET INFORMATION. THIS SHEET MAY NOT BE TRANSFERED FROM THE CUSTODY OF THE COMPETENT DIVISION OF R&D DEPARTMENT EXCEPT AS AUTHORIZED BY COMPAL ELECTRONICS, INC. NEITHER THIS SHEET NOR THE INFORMATION IT CONTAINS MAY BE USED BY OR DISCLOSED TO ANY THIRD PARTY WITHOUT PRIOR WRITTEN CONSENT OF COMPAL ELECTRONICS, INC.

Compal Electronics, Inc.

Title: POWER TREE

Size: A1 | Document Number: ZSJVV -LA-A401P | Rev: 0.1

Date: Wednesday, April 17, 2013 | Sheet 28 of 28

2013/3/11
Update PD11 , D308 , D309 , D310 , D311 , L301 ,
  L302 , L303 , L304 , L307 , C647 , C646 , C635 ,
  C638 compal P/N
Change to un-pop : PR50 , R1838 , R314 ,R315
Change to pop : R1855

2013/3/13
Add C318

2013/3/14
Del R332,R348

2013/4/1
add R1847
reserve 0-ohm for panel design

2013/4/10
reserve C346 for VGP6_PMU
PR51 change to 15K_0402_1%
PH1 change to 10K_0402_1%

2013/4/15
Add PL5 , PC143 ,PC144 for EMI request
Add PC21 , PC22 ,PC23 for RF request

Security Classification	Compal Secret Data		
Issued Date	2012/11/03	Deciphered Date	2013/11/03

THIS SHEET OF ENGINEERING DRAWING IS THE PROPRIETARY PROPERTY OF COMPAL ELECTRONICS, INC. AND CONTAINS CONFIDENTIAL AND TRADE SECRET INFORMATION. THIS SHEET MAY NOT BE TRANSFERED FROM THE CUSTODY OF THE COMPETENT DIVISION OF R&D DEPARTMENT EXCEPT AS AUTHORIZED BY COMPAL ELECTRONICS, INC. NEITHER THIS SHEET NOR THE INFORMATION IT CONTAINS MAY BE USED BY OR DISCLOSED TO ANY THIRD PARTY WITHOUT PRIOR WRITTEN CONSENT OF COMPAL ELECTRONICS, INC.

Compal Electronics, Inc.

Title: POWER PIR

Size: Custom | Document Number: ZSJVV -LA-A401P | Rev: 0.1

Date: Wednesday, April 17, 2013 | Sheet 27 of 28

2013/2/25
P04. NC parts change to 0.1uF_0402_NC
  R1648~R1651 to 0_0603
  R1639 to 0_0805
P05. R634 from P19 to P05
  update X602 symbol
  del no funcitn net :
  U201C_AF10, U201D_C29~J25, U201E_G2
P06. DEL TP1392PAD~TP1395PAD
P07. DEL R1672,R1673,net cabc_enable1/0
  C1687~C1689 change to 1U_16V
  C1691~C1698 change to 0.1U_10V&0.01U_16V
  C1692,C1695 to @
P08. DEL R1702,net ADC1_ACCESSORY
  JP2_PIN.8 change to VEMC_3V3_PMU
  JP2_PIN.6 change to GND
P09. R1711,R1716~R1719,R1721,R1722 to 0_0201
P11. DEL R1731,R1732, net UTXD1/URXD1_DEBUG
  R1729,R1730 to short
  R1728,R1727 del @
P12. R1764 to short
  U825 VDD28_6583 change to VDD18_6583
P13. DEL R1740, net VDD28_6583
  H7 change to H_1P5X2P0N
P14. R1743,R1744 to short
P15. SW3 PIN.3 to KCOL0
  SW4 PIN.3 to KCOL1
P16. JP10 PIN.2 to GND
P17. ADD D7
  ADD C9~C12 for RF request
P18. DEL RM2
  R1765,R1766 move to U201 side
Update 3G schematic:
1.change size from 0402 to 0201 of R633,C631,R612,R1771
2.Add shunt cap in RX matching circuit.
3.Remove R645,U614,C644,R643
  Change C656,C643 bom structure to @
4.remove R613
5.change C610,C609,C614,C613 footprint from 0402 to 0201
6. change C601,C604 footprint from 0402 to 0201
  (need update P/N)
7 .Del R634 (change to P5)

2013/2/26
Update Block diagram,Notes list
P05. DEL net URXD2,UTXD2,BPI1_BUS5/6,VBIAS
  R1765 pin2 contact USB11_DP_P
  R1766 pin2 contact USB11_DM_N
P06. C64 , C70 , C 68 change to 0201
P08. JP2_PIN2. del GND
P09. Del net MT6620_EEDI,MT6620_SDIO1
  RTCCLK_6620,SYSRST_B_6620,PMU_EN_6620
  GPS_SYNC_6620
P12. ADD R1764 for co-lay STK8313
Update 3G schematic:
1.Update C601,C604 P/N to SE000010K00
2.C754,C749,C748,C750: @ to 3G@
3.Change C733 to 0.01u
4.add remind as below in C1844 and C722

2013/2/27
P04. R1639 to 0805 short pad
P05. R1765,R1766 change to 3G@
P10. JP5 mirror horizonally
P13. PAD1~3 change to S2~4
P17. ADD C13
 C9~C12 change to @

2013/3/1
P04. change R1639 footprint from 0805-s to 0805
  R1648,R1650 change to 0603 short pad
update PWR schematic
update 3G schematic
Due to RX trace "交錯線"
Change W_RX_HB1_SE_M_1 to U616.8
            W_RX_HB1_SE_P_1 to U616.1

2013/3/1_A
P05. U201_AH4,AF6 change to MB_ID0/1
  U201_AJ3,AH5,AG5 change to GPIO_0~3
  ADD R1520~R1529,net CHG_TEMP
P11. DEL R1727
update PWR schematic

2013/3/1_B
P04. R1648,R1650 change to 0805 short pad
P21. update PU3 footprint
P24. DEL PR3

2013/3/2
update 3G schematic
P19. U613.7 contact to D_W_RX_HB5_P_3
        U613.8 contact to D_W_RX_HB5_M_3
update PWR schematic
P22. GND_DCDC contact to GND

2013/3/3
update PWR schematic

2013/3/4
P03. update MB_ID table
fix DRC error

2013/3/5
update 3G schematic.
Del TP1396,TP1397
update PWR schemaitc
fix DRC error

2013/3/6
P05. net MB_ID1 change to U201_AA28
  net GPIO_0 change to U201_AA29

2013/3/7
P07. ADD R1684 for IT6211VG
  ADD R1675,R1678, net CABC_ENABLE0/1
P09. U822_PIN15 change to net MT6620_1V8
  remove R1720, C1736
  Add P21. for GPS MT3332 circuit
update 3G schematic
  P19. Add C1896~C1901
  del R633,R619,R620,R611

2013/3/8
P13. DEL CLIP10,14, S4
Update 3G schematic
  U601.A11 ---> NC

2013/3/8A
P09. ADD R1713
Update MT3332 schematic
 remove R1858,R1861,R1863,R1865
  R1866,R1868

2013/3/9a
Update 3G schematic
  modify C1898,C1899 net name

2013/3/11
Add P26 POWER PIR
P21. Update L856 LIB & P/N
update PWR schematic

2013/3/12
update block diagram
add power tree page

2013/3/13
ADD NH520@,NH520_EMC@
modify RAM BOM structure
P01 Add S4 for GLONASS frame
P05. Del TP1373
P07 R1675,R1678 to @
 ADD C1772,C1773 for RF request
P09. update U823 symbol
P13. R535 to 27ohm(MTK advice)
P15. R1753,C1759 to @ (MTK advice)
P17. ADD TP1364,TP1365 for RF request
update 3G schematic
 delete C643,C656,TP601,TP602

2013/3/14
P05. ADD TP1366,TP1369
P21. C1887,C1902-->SE00000WN00
C1888,C1889,C1891,C1893-->SE000000UC00
C1890-->SE00000V600
  update 3G schematic
Add C1903 for U708.

2013/3/18
L838,L839,L840,L841,L842,L853
change to SM070001R00

Security Classification	Compal Secret Data			Compal Electronics, Inc.
Issued Date	2012/11/03	Deciphered Date	2013/11/03	Title HW PIR

THIS SHEET OF ENGINEERING DRAWING IS THE PROPRIETARY PROPERTY OF COMPAL ELECTRONICS, INC. AND CONTAINS CONFIDENTIAL AND TRADE SECRET INFORMATION. THIS SHEET MAY NOT BE TRANSFERED FROM THE CUSTODY OF THE COMPETENT DIVISION OF R&D DEPARTMENT EXCEPT AS AUTHORIZED BY COMPAL ELECTRONICS, INC. NEITHER THIS SHEET NOR THE INFORMATION IT CONTAINS MAY BE USED BY OR DISCLOSED TO ANY THIRD PARTY WITHOUT PRIOR WRITTEN CONSENT OF COMPAL ELECTRONICS, INC.

Size	Document Number	Rev
Custom	ZSJVV -LA-A401P	0.1

Date: Wednesday, April 17, 2013 Sheet 28 of 28