Service schematics

Nokia Lumia 1020

RM-877

18.07.2013

v1.0

IMPORTANT

This document is intended for use by authorized Nokia service centers only. Please use the document together with other documents such as the Service Manual and Service Bulletins.

Version information

While every effort has been made to ensure that the document is accurate, some errors may exist. Please always check for the latest published version for this document.

If you find any errors in the document please send email to: service.manuals@nokia.com

1.0 First approved version.

Contents

1 Front page
2 PM8921, Power, Wireless charging flex, Side key flex, NFC, SIM
3 PM8921, MSM8960
4 MSM8960, Memory, Display, Touch, Camera, Front camera flex, Flash, Sensors
5 Audio, AV flex, USB flex
6 RF Transceiver, GPS, BT/WLAN/FM
7 RF Transceiver
8 Component finder top
9 Component finder bottom
10 Component finder flex boards

Nokia Internal Use only | Copyright © 2013 Nokia, Only for training and service purposes

Nokia Care Academy

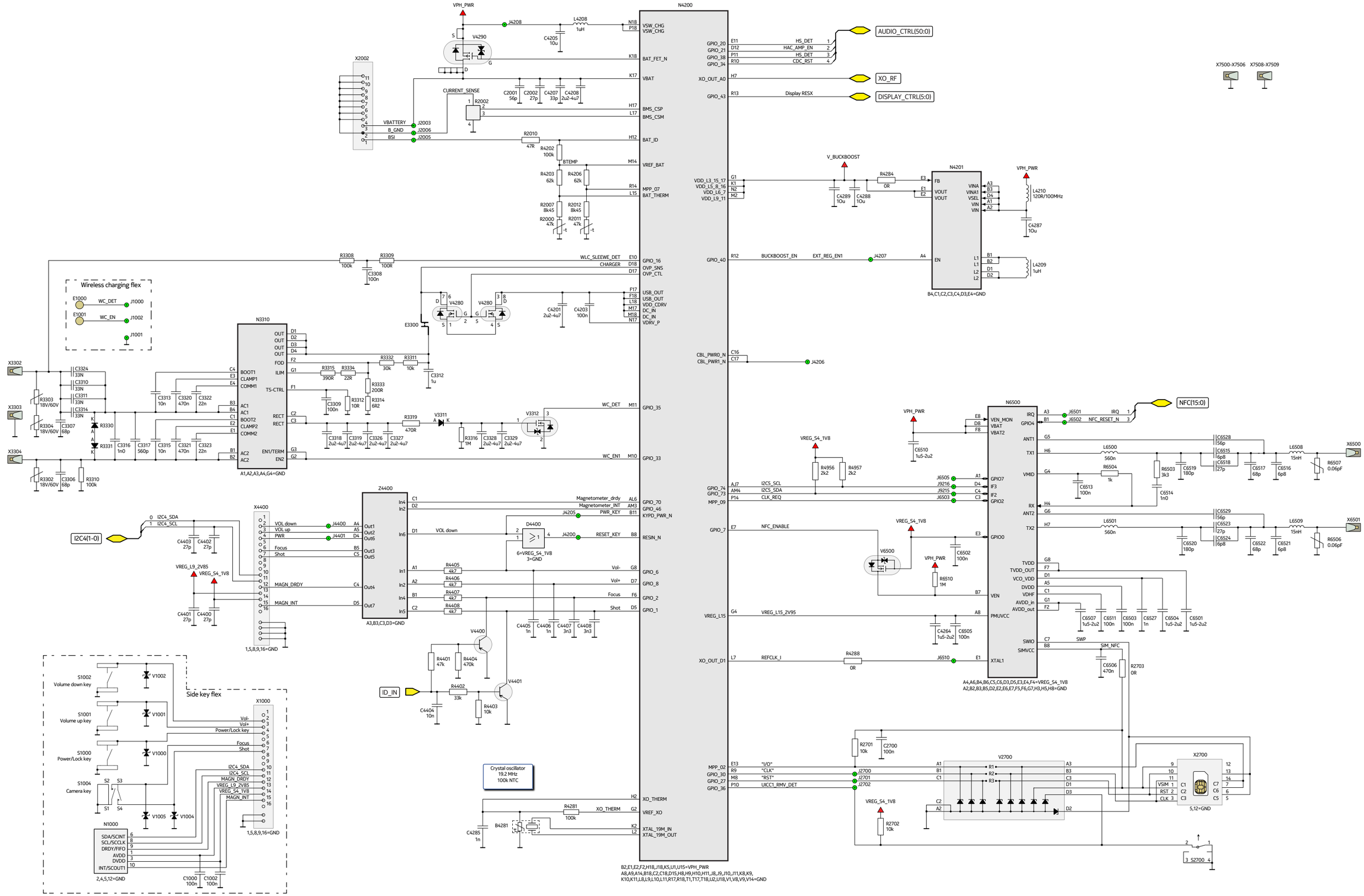

Nokia Internal Use only | Copyright © 2013 Nokia, Only for training and service purposes

Nokia Care Academy

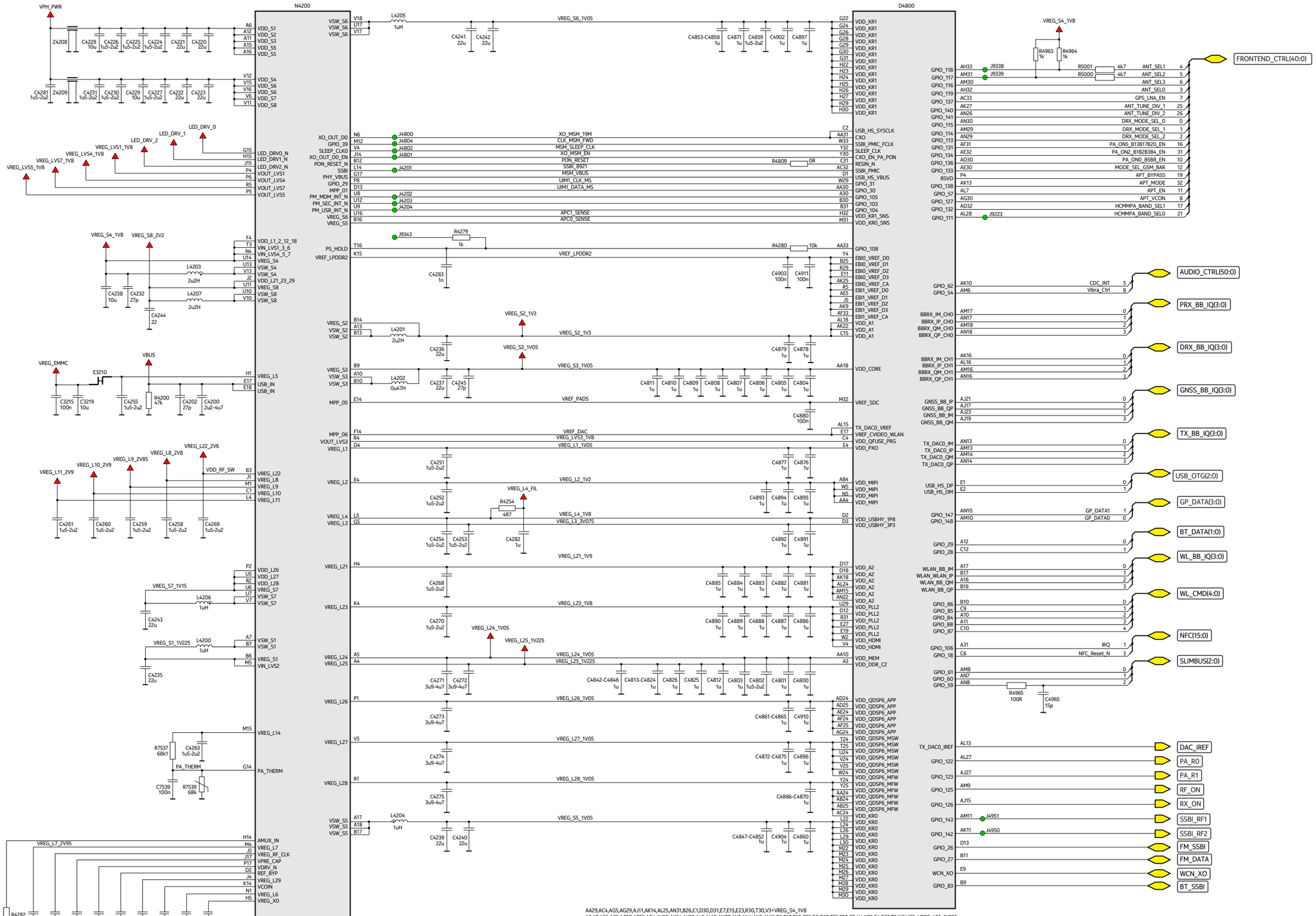

Nokia Internal Use only | Copyright © 2013 Nokia, Only for training and service purposes

Nokia Care Academy

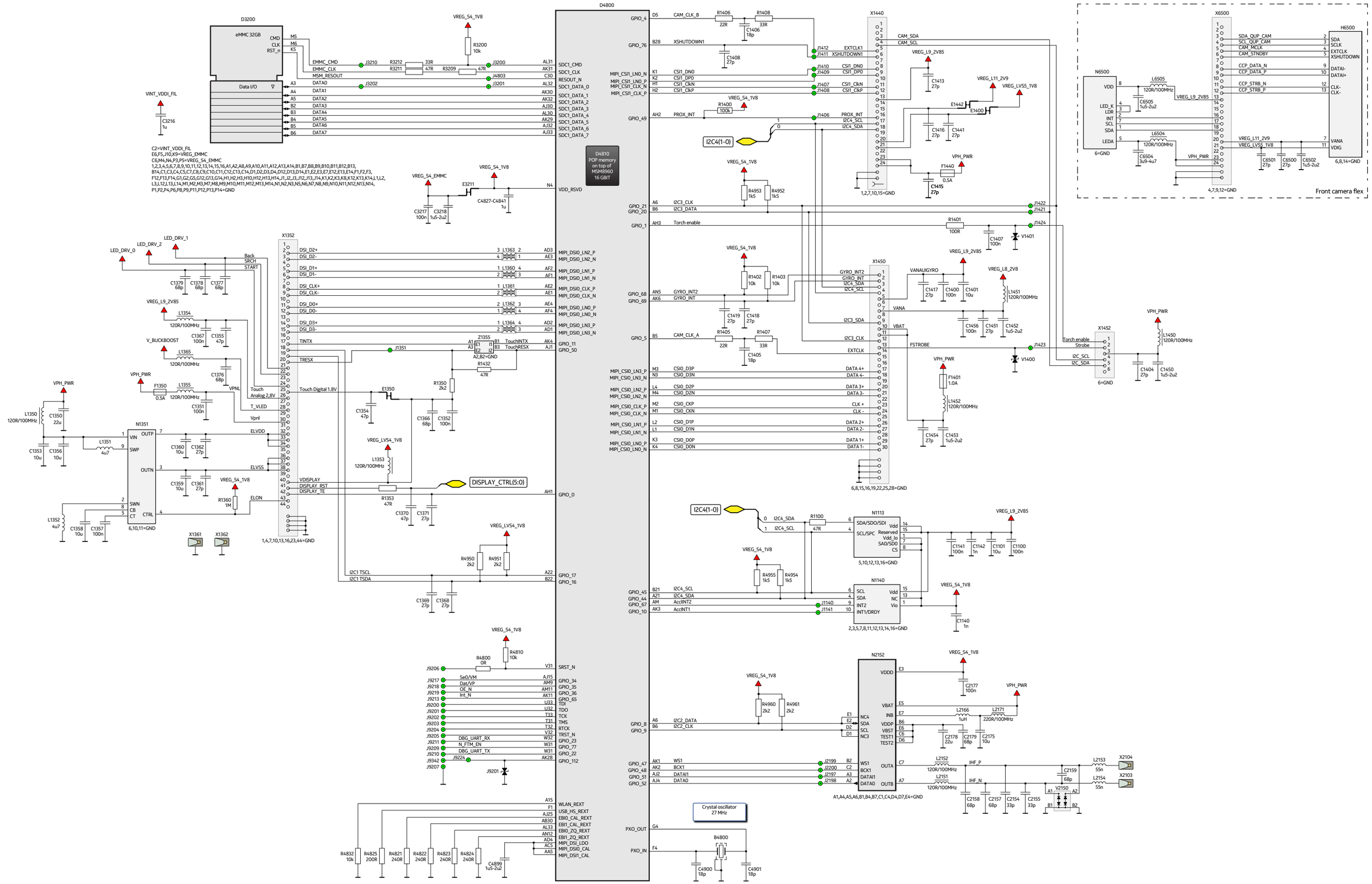

Nokia Internal Use only | Copyright © 2013 Nokia, Only for training and service purposes

Nokia Care Academy

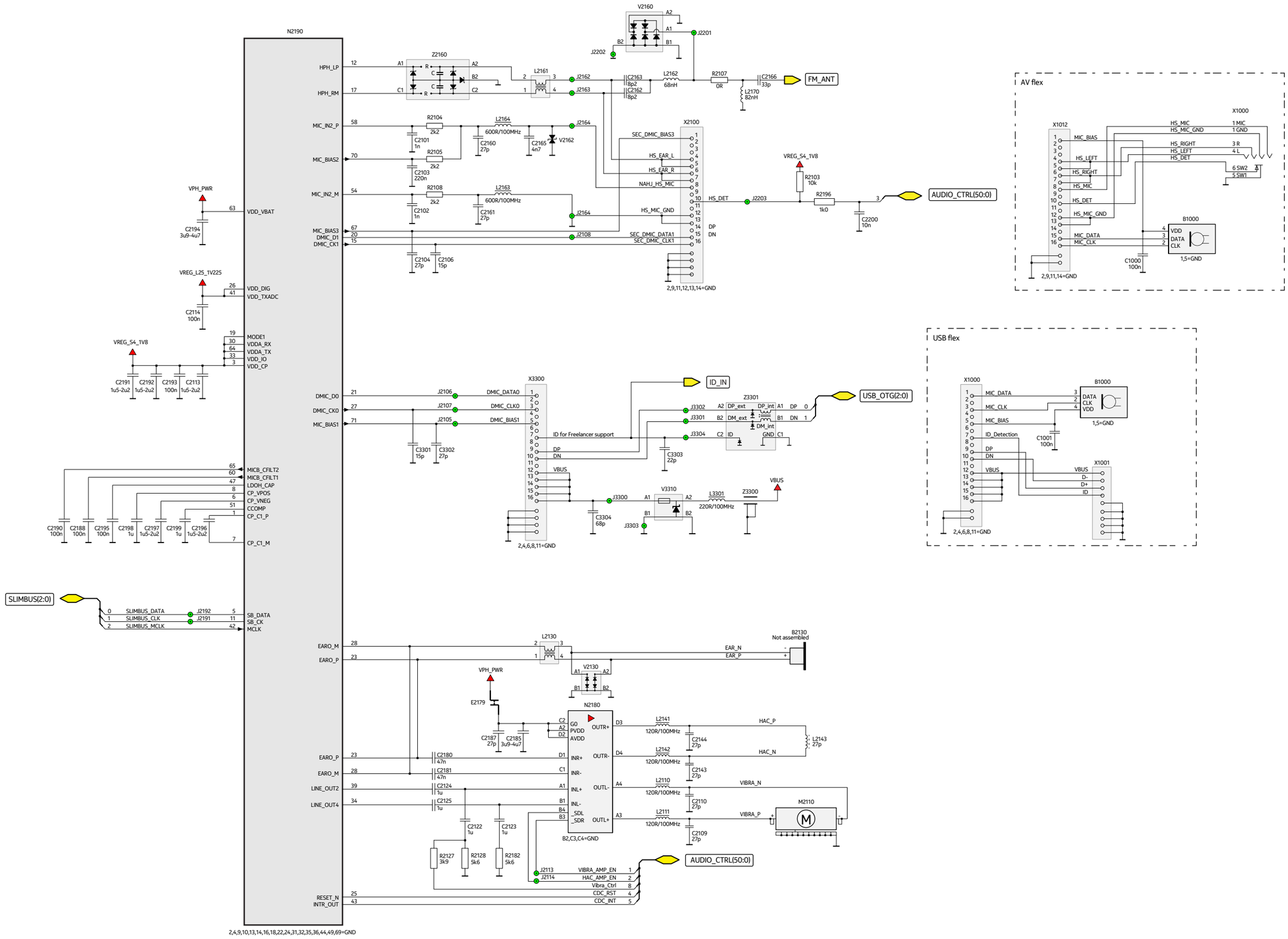

Nokia Internal Use only | Copyright © 2013 Nokia, Only for training and service purposes

Nokia Care Academy

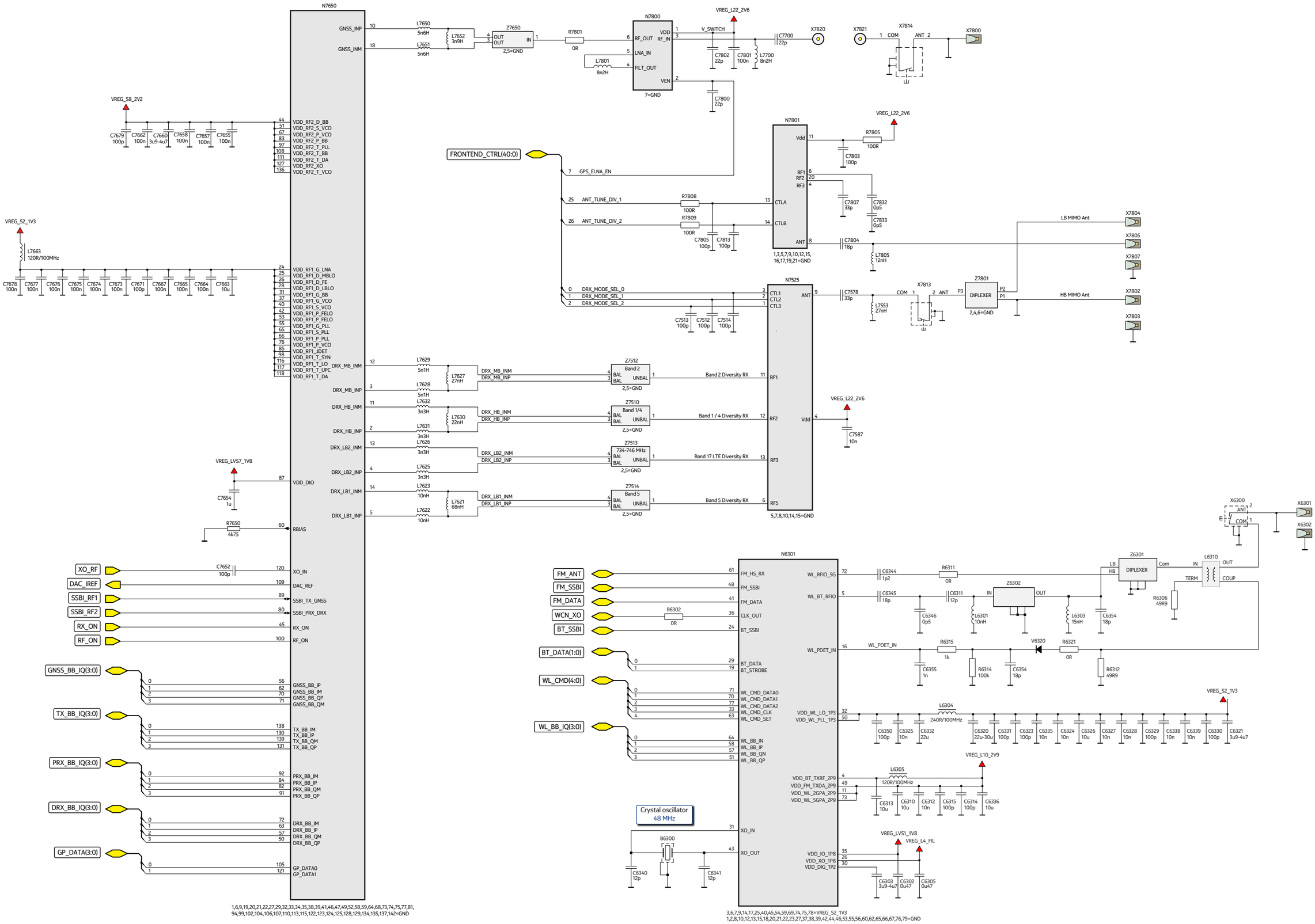

Nokia Internal Use only | Copyright © 2013 Nokia, Only for training and service purposes

Nokia Care Academy

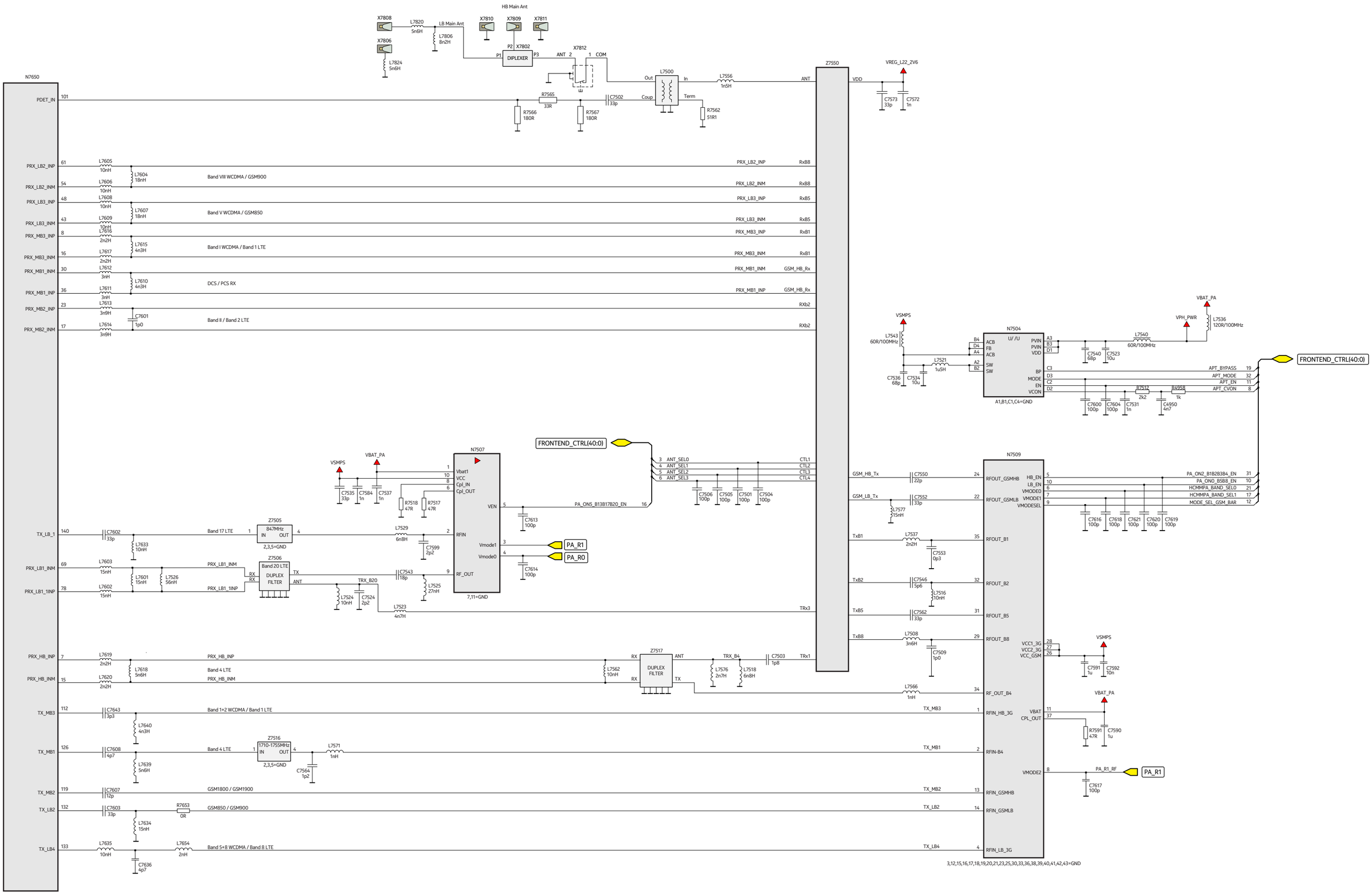

Nokia Internal Use only | Copyright © 2013 Nokia, Only for training and service purposes

Nokia Care Academy

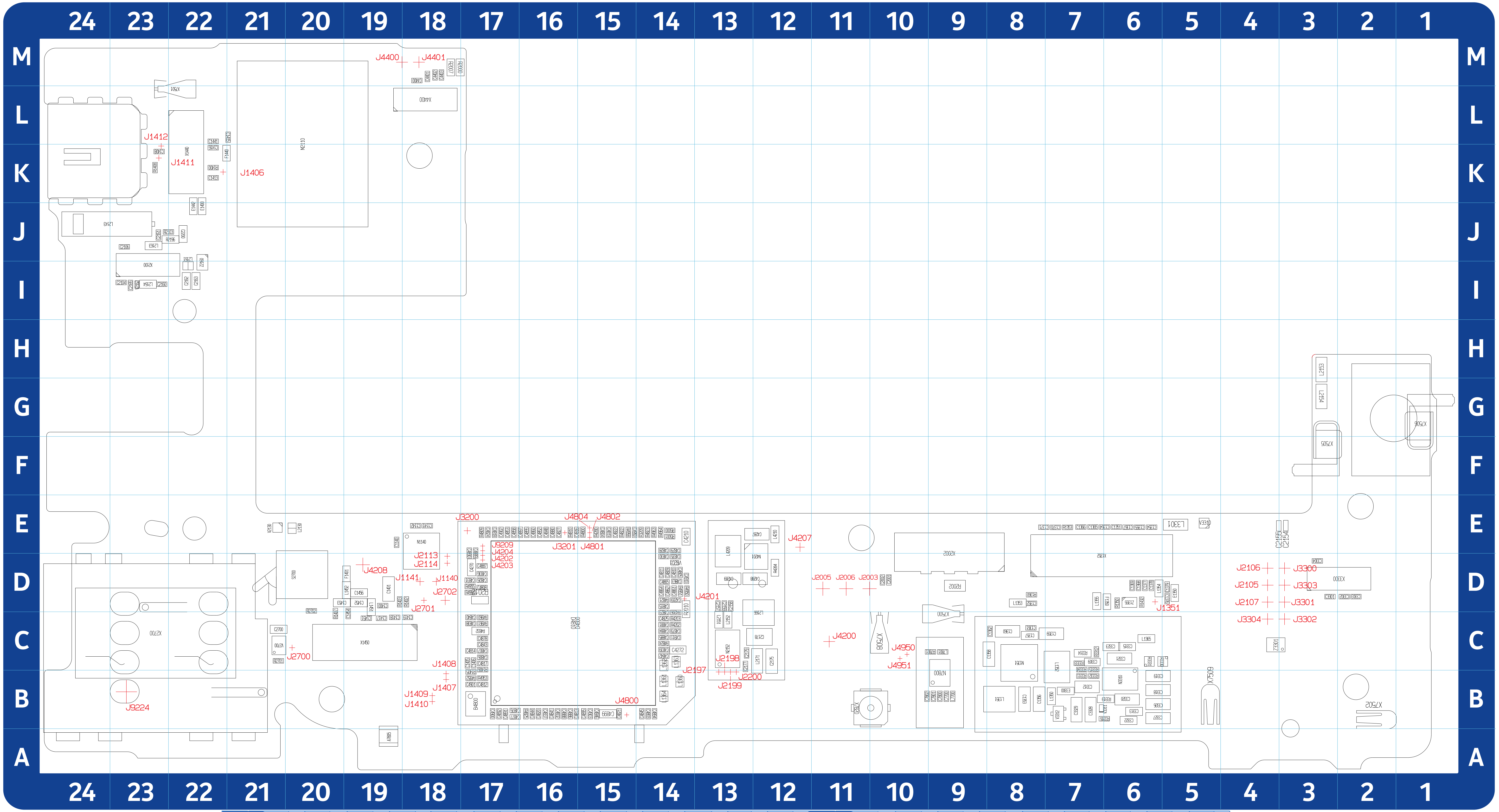

B		C1361	C8	C1405	C17	C2002	D10	C2179	C13	C3323	C6	C4804	E15	C4820	B16
B4800	B17	C1362	C8	C1406	C17	C2104	I23	C2200	J22	C3326	B6	C4805	D14	C4821	B15
B		C1364	E6	C1408	K23	C2106	J23	C2700	C21	C3327	B6	C4806	C17	C4822	E15
C1140	E19	C1365	E7	C1413	K22	C2154	E3	C3301	D3	C3328	B7	C4807	C17	C4823	C14
C1141	E18	C1366	E7	C1415	L21	C2155	E4	C3302	D2	C3329	B7	C4808	D17	C4824	E17
C1142	E18	C1367	E6	C1416	K22	C2157	D13	C3303	D2	C4209	D14	C4809	D14	C4825	C14
C1351	E6	C1368	D6	C1417	C19	C2158	D13	C3304	D3	C4210	E14	C4810	D14	C4826	D17
C1352	D8	C1369	D6	C1418	C19	C2159	D13	C3309	C7	C4270	D17	C4811	D14	C4827	E16
C1353	B8	C1370	E7	C1419	C18	C2160	I23	C3312	B7	C4272	C14	C4812	B17	C4828	E14
C1354	E6	C1371	E8	C1441	L22	C2161	J23	C3313	B6	C4287	E12	C4813	B16	C4829	E14
C1355	E6	C1376	D5	C1451	C19	C2162	I22	C3315	C6	C4288	D12	C4814	C17	C4830	D14
C1356	B8	C1377	D6	C1452	D19	C2163	I22	C3318	B6	C4289	D13	C4815	D14	C4831	D17
C1357	C8	C1378	D6	C1453	D20	C2165	I23	C3319	B6	C4400	M18	C4816	E16	C4832	B16
C1358	C8	C1379	D5	C1454	C19	C2175	C12	C3320	B6	C4401	M18	C4817	C17	C4835	D14
C1359	C7	C1400	D19	C1456	D19	C2177	C13	C3321	C6	C4402	M18	C4818	E17	C4836	D17
C1360	C8	C1401	D19	C2001	D10	C2178	C12	C3322	B6	C4403	M18	C4819	E15	C4837	B16

C4838	C17	C4862	D14	C4890	E17	C7800	B9	L1350	B7	L2151	C13	**N**		R1407	C20
C4839	C14	C4863	D14	C4891	B17	C7801	B9	L1351	B8	L2152	C13	N1140	E18	R1408	K23
C4840	C17	C4864	D14	C4892	B17	C7802	B10	L1352	C7	L2153	H3	N1351	C8	R1432	D6
C4841	B16	C4865	D14	C4893	B14	**D**		L1353	D8	L2154	G3	N2152	C13	R2000	M18
C4842	C14	C4876	B17	C4894	B14	D4800	C16	L1354	D6	L2161	I22	N3310	B6	R2002	D9
C4843	C17	C4877	B17	C4895	B15	D4810	C16	L1355	D7	L2163	J23	N4201	D12	R2007	M18
C4844	B16	C4878	C17	C4897	E16	**E**		L1360	B14	L2164	I23	N7800	B9	R2010	D14
C4845	B14	C4879	C14	C4899	B15	E1350	D5	L1361	B14	L2166	C12	**R**		R2012	D17
C4846	B15	C4880	E16	C4900	B17	E1400	J22	L1362	C14	L2171	C12	R1350	D6	R2103	J23
C4848	E16	C4881	C14	C4901	B17	E1442	J22	L1363	C14	L3301	E5	R1353	E7	R2196	J22
C4852	E16	C4884	C14	C4902	E17	E3300	B7	L1364	B14	L4209	E13	R1360	D8	R2701	C21
C4853	E17	C4885	C14	C4903	B15	**F**		L1365	C6	L4210	E12	R1400	K22	R2702	D20
C4855	E16	C4886	B16	C4910	D14	F1350	D6	L1451	D19	L7700	B9	R1402	D18	R3209	E14
C4858	E17	C4887	D17	C4911	C14	F1401	D19	L1452	D19	L7801	C9	R1403	D19	R3311	B7
C4860	E16	C4888	B16	C4950	E15	F1440	K22	L2130	E20	**M**		R1405	B17	R3312	C7
C4861	D14	C4889	E17	C7700	B9	**L**		L2143	J24	M2110	L20	R1406	C17	R3314	C7

R3315	C7	R4821	D14	R4964	E14	X1440	K22	Z1355	D6	J2006	D11	J3301	D3	J4804	E15
R3316	B6	R4822	E15	R5000	E14	X1450	C19	Z2160	I22	J2105	D4	J3302	C3	J4950	C10
R3319	B6	R4823	E14	R5001	E14	X2002	E9	Z3301	C4	J2106	D4	J3303	D3	J4951	C10
R3330	C5	R4824	C14	R7801	C9	X2100	I23	**TST points**		J2107	D4	J3304	C4	J9209	E17
R3331	C6	R4825	B16	**S**		X2700	C23	J1140	D18	J2113	D18	J4200	C11	J9224	B23
R3332	B7	R4832	C17	S2700	D20	X3300	D2	J1141	D18	J2114	D18	J4201	D14		
R3333	C7	R4950	D14	**V**		X4400	L18	J1351	D6	J2197	B13	J4202	D17		
R3334	C7	R4951	D14	V2130	E21	X7500	C9	J1406	K22	J2198	B13	J4203	D17		
R4202	C14	R4952	B17	V2162	I23	X7501	L22	J1407	B18	J2199	B13	J4204	E17		
R4203	C14	R4953	B17	V2700	C21	X7502	B2	J1408	B18	J2200	B13	J4207	E12		
R4206	C14	R4954	D17	V3310	E5	X7505	F3	J1409	B18	J2700	C20	J4208	D19		
R4280	E15	R4955	D17	V3311	B7	X7506	G1	J1410	B18	J2701	D18	J4400	M19		
R4284	D12	R4958	E15	V3312	B7	X7508	C10	J1411	K23	J2702	D18	J4401	M18		
R4800	E15	R4960	C17	V9201	D14	X7509	B5	J1412	K23	J3200	E17	J4800	B15		
R4809	E17	R4961	C17	**X**		X7820	B10	J2003	D11	J3201	E16	J4801	E15		
R4810	E16	R4963	E14	X1352	D7	**Z**		J2005	D11	J3300	D3	J4802	E15		

Nokia Lumia 1020 RM-877 | Board: 3WB_17z | v1.0 | 18.07.2013 | Upknowledge

Nokia Internal Use only | Copyright © 2013 Nokia, Only for training and service purposes

Nokia Care Academy

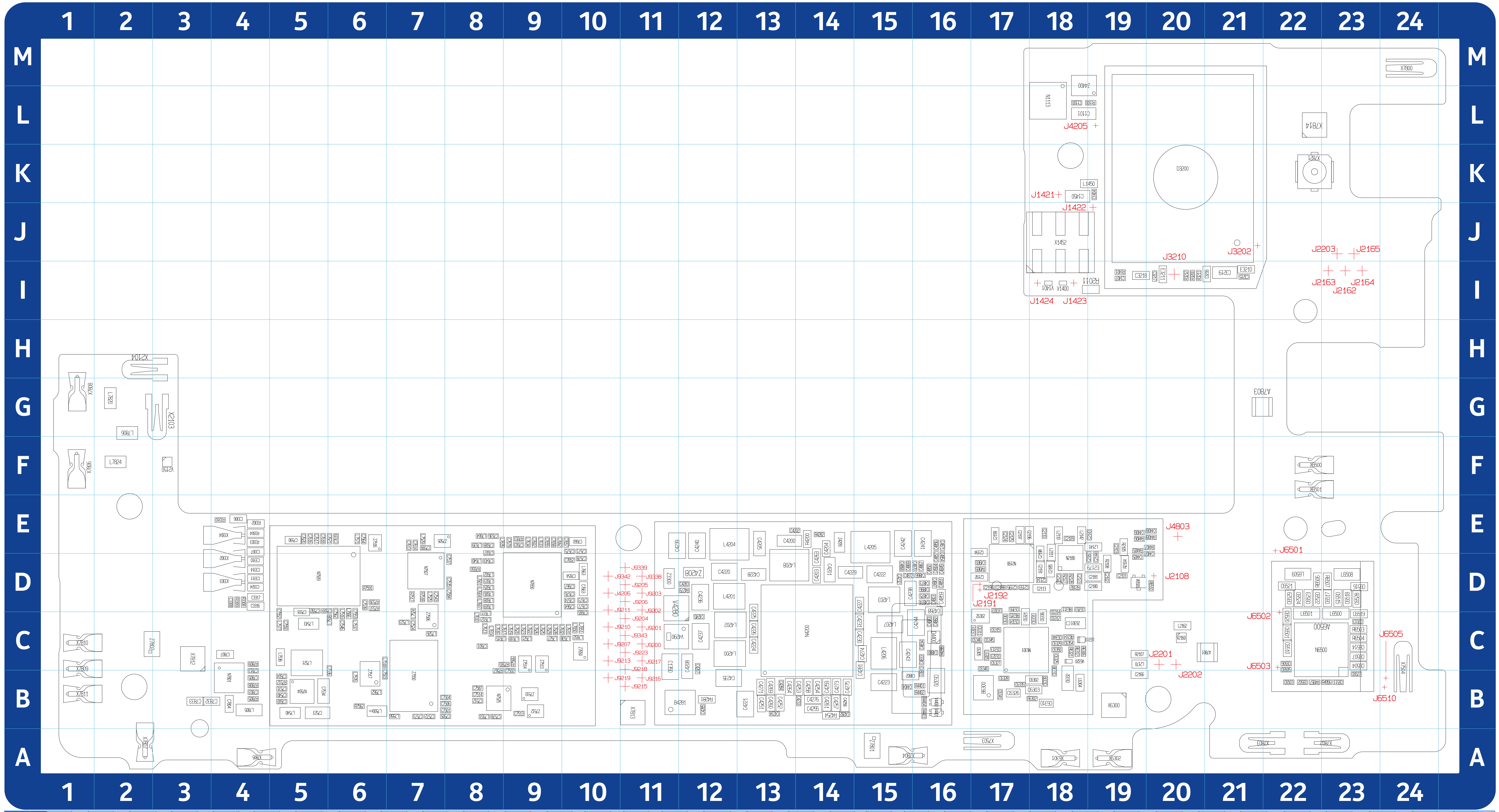

B		C2114	D18	C2193	D17	C3311	D4	C4223	B15	C4239	E11	C4260	B13	C4404	B15	C4856	E16	C4904	D16	C6326	B17	C6350	C18	C6516	D23	C7505	B8	C7546	C6	C7601	C8	C7652	D10	C7677	D10	E3211	I20	L4207	C15	L7523	C7	L7601	D8	L7617	C9	L7634	E9	N2190	D17	R2107	C19	R4279	D12	R6306	C18	R7562	B6	V4290	C11	X6501	F22	X7814	L22	Z4400	M18	Z7803	M22	J2203	J23	J9205	D11
B4281	B12	C2122	D18	C2194	E17	C3314	D4	C4224	C13	C4240	E12	C4261	B14	C4405	D19	C4857	D16	C4965	D17	C6327	C17	C6353	D18	C6517	D23	C7506	B8	C7550	C5	C7602	E9	C7654	D10	C7678	D10	**L**		L4208	D13	L7524	C7	L7602	D8	L7618	C9	L7635	E8	N4200	C14	R2108	D19	R4281	B12	R6311	D18	R7565	C9	V4400	B16	X7503	A17	X7821	K22	Z6301	C18	Z7804	B24	J3202	J21	J9206	D11
B6300	B17	C2123	D18	C2195	D17	C3316	D4	C4225	C13	C4241	E16	C4263	D14	C4406	E19	C4859	D16	C6302	B18	C6328	B17	C6354	C18	C6518	D23	C7509	D5	C7552	C5	C7603	E9	C7655	E9	C7679	E9	L1450	K19	L6301	C17	L7525	D7	L7603	D8	L7619	C9	L7639	E8	N6301	C17	R2127	D18	R4282	E14	R6312	C18	R7566	C9	V4401	B16	X7504	B24	**Z**		Z6302	C17	**TST points**		J3210	I20	J9207	C10
C		C2124	E17	C2196	E18	C3317	D4	C4226	C13	C4242	E15	C4264	B13	C4407	D20	C4866	D16	C6303	B18	C6329	C18	C6355	D17	C6519	C23	C7512	B8	C7553	C6	C7604	B5	C7657	E10	C7803	B4	L2110	E18	L6303	D17	L7526	C7	L7604	D8	L7620	C9	L7640	D8	N6500	C22	R2128	D18	R4288	C16	R6314	C18	R7567	B8	V6320	C18	X7800	M24	Z2181	J23	Z6303	A17	J1421	K18	J4205	L19	J9210	C10
C1100	L18	C2125	E17	C2197	E17	C3324	D4	C4227	D15	C4243	C15	C4268	D16	C4408	E20	C4867	D16	C6305	C17	C6330	C17	C6501	C22	C6520	C22	C7513	B9	C7562	C6	C7607	E8	C7658	E9	C7804	B4	L2111	E18	L6304	B18	L7529	E7	L7605	D8	L7621	C9	L7650	C10	N7504	B5	R2182	D18	R4401	B16	R6315	C17	R7591	D6	V6500	D19	X7802	A23	Z3300	D11	Z7505	E7	J1422	J19	J4206	D10	J9211	D10
C1101	L18	C2143	E19	C2198	D18	C4200	E13	C4228	D13	C4244	C16	C4269	B13	C4800	C16	C4868	D15	C6310	B18	C6331	C18	C6502	B22	C6521	D22	C7514	B8	C7564	E6	C7608	E8	C7660	E10	C7805	B4	L2141	E19	L6305	C17	L7536	C5	L7606	D8	L7622	C9	L7651	C10	N7507	D7	R3200	I20	R4402	B16	R6321	C18	R7650	D8	**X**		X7803	A21	Z4200	B12	Z7506	C7	J1423	I18	J4803	E20	J9213	C10
C1350	C11	C2144	D19	C2199	E17	C4201	D14	C4229	D14	C4245	C12	C4271	B13	C4801	B16	C4869	D15	C6311	C17	C6332	B18	C6503	B22	C6522	D22	C7523	B5	C7572	B7	C7613	E7	C7662	E9	C7807	C4	L2142	E18	L6310	C18	L7537	C6	L7607	D8	L7623	C9	L7652	C10	N7509	D5	R3211	I20	R4403	B16	R6503	C23	R7653	E9	X1452	J18	X7804	A15	Z4201	D13	Z7510	B9	J1424	I18	J6501	E22	J9215	B11
C1404	K19	C2166	B19	C3215	I21	C4202	E13	C4230	C15	C4251	B13	C4273	B14	C4802	B15	C4870	D16	C6312	C18	C6335	B17	C6504	C23	C6523	D22	C7524	C7	C7573	B7	C7614	E7	C7663	D10	C7813	B4	L2162	C20	L6500	C23	L7540	B5	L7608	D8	L7625	C9	L7663	D10	N7525	B8	R3212	I20	R4404	B16	R6504	C23	R7805	B4	X2103	G3	X7805	A4	Z4202	C12	Z7512	B9	J2108	D20	J6502	C22	J9216	B11
C1407	I19	C2180	D19	C3216	I21	C4203	D14	C4231	C15	C4252	B13	C4274	C15	C4803	D16	C4871	E16	C6313	C17	C6336	C18	C6505	C22	C6524	D22	C7531	B5	C7578	B8	C7616	E5	C7664	D10	C7832	B4	L2170	C19	L6501	C22	L7543	C5	L7609	D8	L7626	C9	L7664	E8	N7650	D9	R3302	E4	R4405	E19	R6506	D22	R7808	B4	X2104	H2	X7806	F1	Z4203	D16	Z7513	C9	J2162	I23	J6503	C22	J9217	C11
C1450	K18	C2181	D19	C3217	I20	C4204	E14	C4232	D15	C4253	B14	C4275	B14	C4833	C16	C4872	D15	C6314	C18	C6338	B18	C6506	C22	C6527	B23	C7534	B5	C7584	D8	C7617	E5	C7665	C10	C7833	B3	L4200	C12	L6508	D23	L7553	B8	L7610	C8	L7627	C9	L7805	B4	N7801	B4	R3303	E4	R4406	E19	R6507	D23	R7809	C4	X3302	D4	X7807	A2	Z4204	D12	Z7514	C9	J2163	I23	J6505	B24	J9218	C11
C2101	D19	C2185	D18	C3218	I19	C4205	E13	C4233	B14	C4254	B14	C4276	B14	C4834	C16	C4873	D16	C6315	C17	C6339	B18	C6507	C23	C6528	D23	C7535	D8	C7587	B8	C7618	E5	C7667	D10	**D**		L4201	D12	L6509	D22	L7556	B7	L7611	C8	L7628	C9	L7806	G2	**R**		R3304	E4	R4407	E20	R6510	D20	**V**		X3303	D4	X7808	G1	Z4205	E16	Z7516	E6	J2164	I23	J6510	B24	J9219	B10
C2102	D19	C2187	D19	C3219	I21	C4207	C12	C4234	B13	C4255	B14	C4281	C15	C4847	D16	C4874	D16	C6320	B16	C6340	C17	C6510	C22	C6529	D22	C7536	B6	C7590	E5	C7619	E6	C7671	E10	D3200	K20	L4202	C12	L7500	B6	L7562	B6	L7612	C8	L7629	C9	L7820	G2	R1100	L19	R3308	D4	R4408	E20	R7512	B5	V1400	I18	X3304	E4	X7809	C1	Z4206	C15	Z7517	B6	J2165	J23	J9200	C11	J9223	C11
C2103	E19	C2188	D17	C3306	E4	C4208	C12	C4235	B12	C4256	B14	C4282	B14	C4849	D16	C4875	D16	C6321	C17	C6341	B17	C6511	B23	C7501	B8	C7537	D8	C7591	C5	C7620	E5	C7673	D10	D4400	C16	L4203	D15	L7508	C6	L7566	C6	L7613	C8	L7630	C10	L7824	F2	R1401	I19	R3309	D4	R4956	B23	R7517	D7	V1401	I18	X6300	B19	X7810	C1	Z4207	C15	Z7550	B7	J2191	D17	J9201	C11	J9338	D11
C2109	E18	C2190	D17	C3307	E4	C4220	D12	C4236	D12	C4257	B14	C4283	D12	C4850	D16	C4882	C16	C6323	C17	C6344	C18	C6513	C23	C7502	B9	C7539	D6	C7592	D5	C7621	E6	C7674	D10	**E**		L4204	E12	L7516	C6	L7571	E6	L7614	C8	L7631	C10	**N**		R2011	I19	R3310	E4	R4957	B22	R7518	D7	V2150	F3	X6301	A18	X7811	B1	Z4208	D12	Z7650	C10	J2192	D17	J9202	D11	J9339	D11
C2110	E18	C2191	D18	C3308	D4	C4221	B13	C4237	C12	C4258	B14	C4284	B13	C4851	D16	C4883	C16	C6324	C17	C6345	C17	C6514	C23	C7503	B6	C7540	B5	C7599	E7	C7636	E8	C7675	E10	E2179	D19	L4205	E15	L7518	C6	L7576	B6	L7615	C8	L7632	C10	N1113	L18	R2104	D19	R4200	E14	R4965	D17	R7537	D6	V2160	C20	X6302	A19	X7812	C3	Z4209	E14	Z7801	A15	J2201	C20	J9203	D11	J9342	D10
C2113	D18	C2192	D17	C3310	D4	C4222	D15	C4238	D15	C4259	B14	C4285	B12	C4854	D16	C4896	D16	C6325	C18	C6346	C17	C6515	D23	C7504	B8	C7543	D7	C7600	B5	C7643	D8	C7676	D10	E3210	I21	L4206	C15	L7521	C5	L7577	C5	L7616	C8	L7633	E9	N2180	D18	R2105	E19	R4254	B14	R6302	B18	R7539	D6	V4280	D11	X6500	F22	X7813	B11	Z4280	C14	Z7802	C2	J2202	C20	J9204	C11	J9343	C11

Nokia Lumia 1020 RM-877 | Board: 3WB_17z | v1.0 | 18.07.2013 | Upknowledge

Nokia Internal Use only | Copyright © 2013 Nokia, Only for training and service purposes

Nokia Care Academy

Primary MIC flex board (Board: 3XU_10)

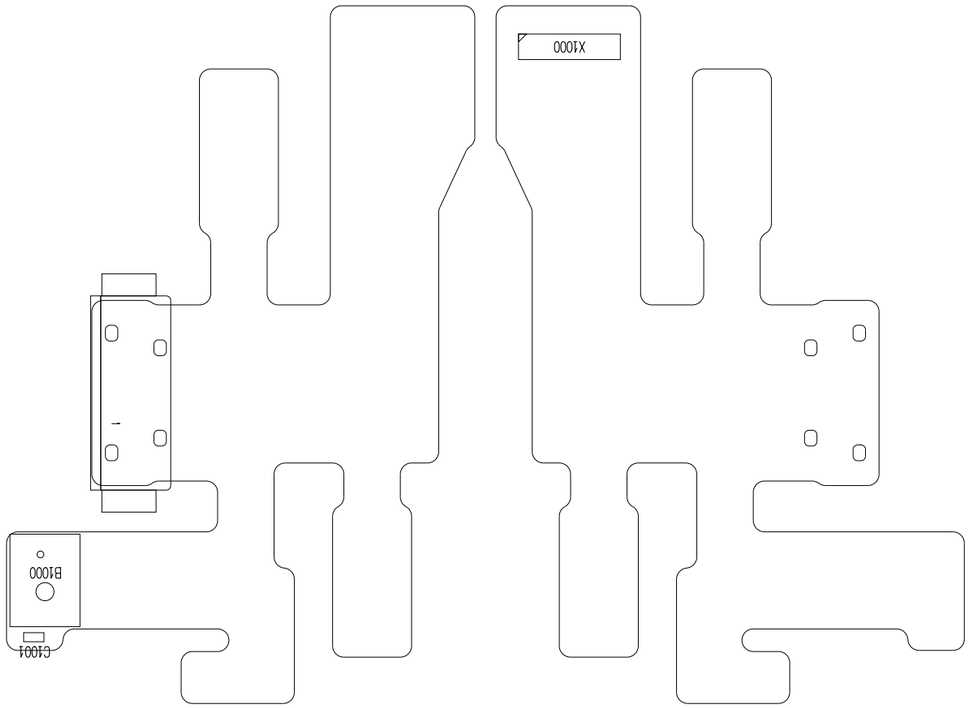

Sidekey flex board (Board: 3XV_12)

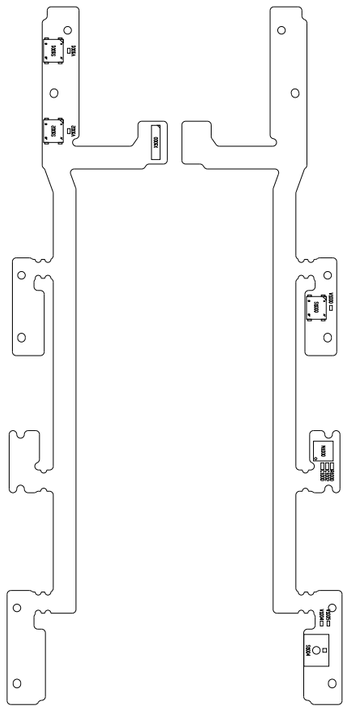

2nd Camera flex board (Board: 3YD_12)

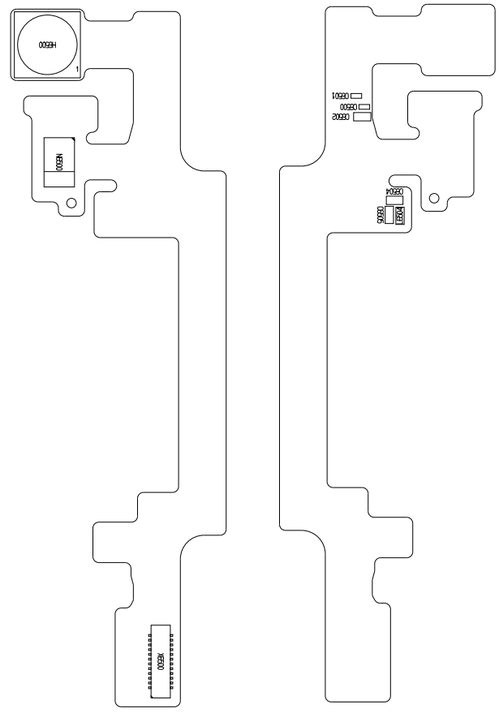

AV flex board (Board: 3YC_12)

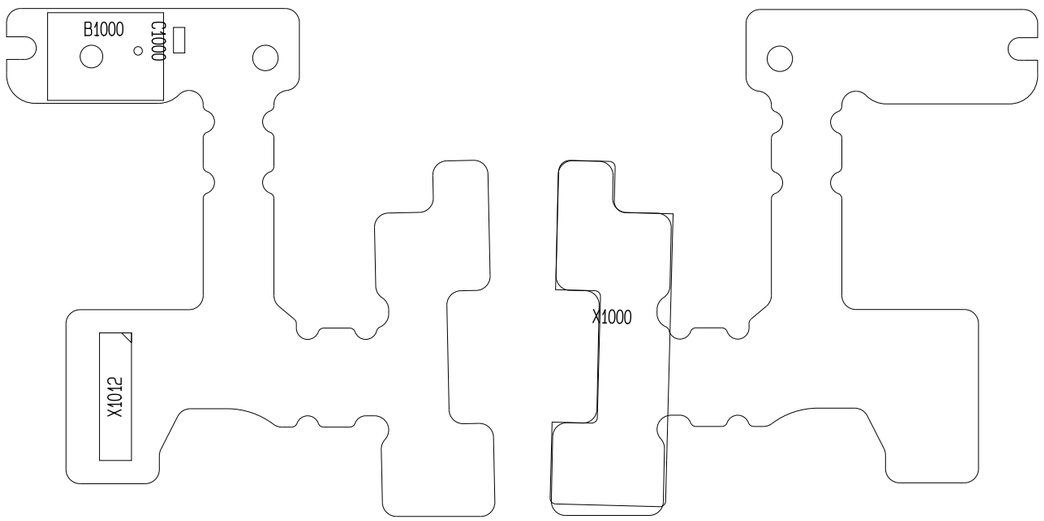

Nokia Internal Use only | Copyright © 2013 Nokia, Only for training and service purposes