Service Schematics

NOKIA
C3-01
RM-640

NOKIA
C3-01m
RM-662

IMPORTANT

This document is intended for use by authorized Nokia service centers only. Please use the document together with other documents such as the Service Manual and Service Bulletins.

Measurements

All measurements were made using the following equipment:

Nokia repair SW	:	Phoenix 2010.24.003.43250
Oscilloscope	:	PicoScope 3206
Spectrum Analyzer	:	Advantest R3162
Multimeter	:	Fluke 175

The measurement points in the schematics are linked to the oscillograms on the signal overview page. The links cycle between the measurement point in the schematics, the oscillogram and the measurement point in the component finder.

This material,including documentation and any related computer programs is protected by copyright, controlled by Nokia. All rights are reserved. Copying, including reproducing, modifying, storing, adapting or translating any or all of this material requires the prior written consent of Nokia. This material also contains company confidential information, which may not be disclosed to others without the prior written consent of Nokia.

Version information

While every effort has been made to ensure that the document is accurate, some errors may exist. Please always check for the latest published version for this document.

If you find any errors in the document please send email to: service.manuals@nokia.com

1.0 First approved version.

Contents

Front page	1
RAPUYAMA, BOB, Display UI, Digital mic, Combo memory	2
PEARLJ, Battery, UI PWB conn	3
PEARLJ, USB transceiver, Audio, IHF speaker, Connector PWB ACF bonding	4
Conn PWB, Battery, AV conn, USB conn, Touch UI, Earpiece, Vibra, Flash PWB	5
UI PWB, Keypad, Keypad LEDs, Reminder LED, MMC, SIM	6
RF part	7
Signal overview	8
Component finder Main board top	9
Component finder Main board bottom	10
Component finder Connector PWB top	11
Component finder Connector PWB bottom	12
Component finder UI PWB	13

NOKIA Care Academy

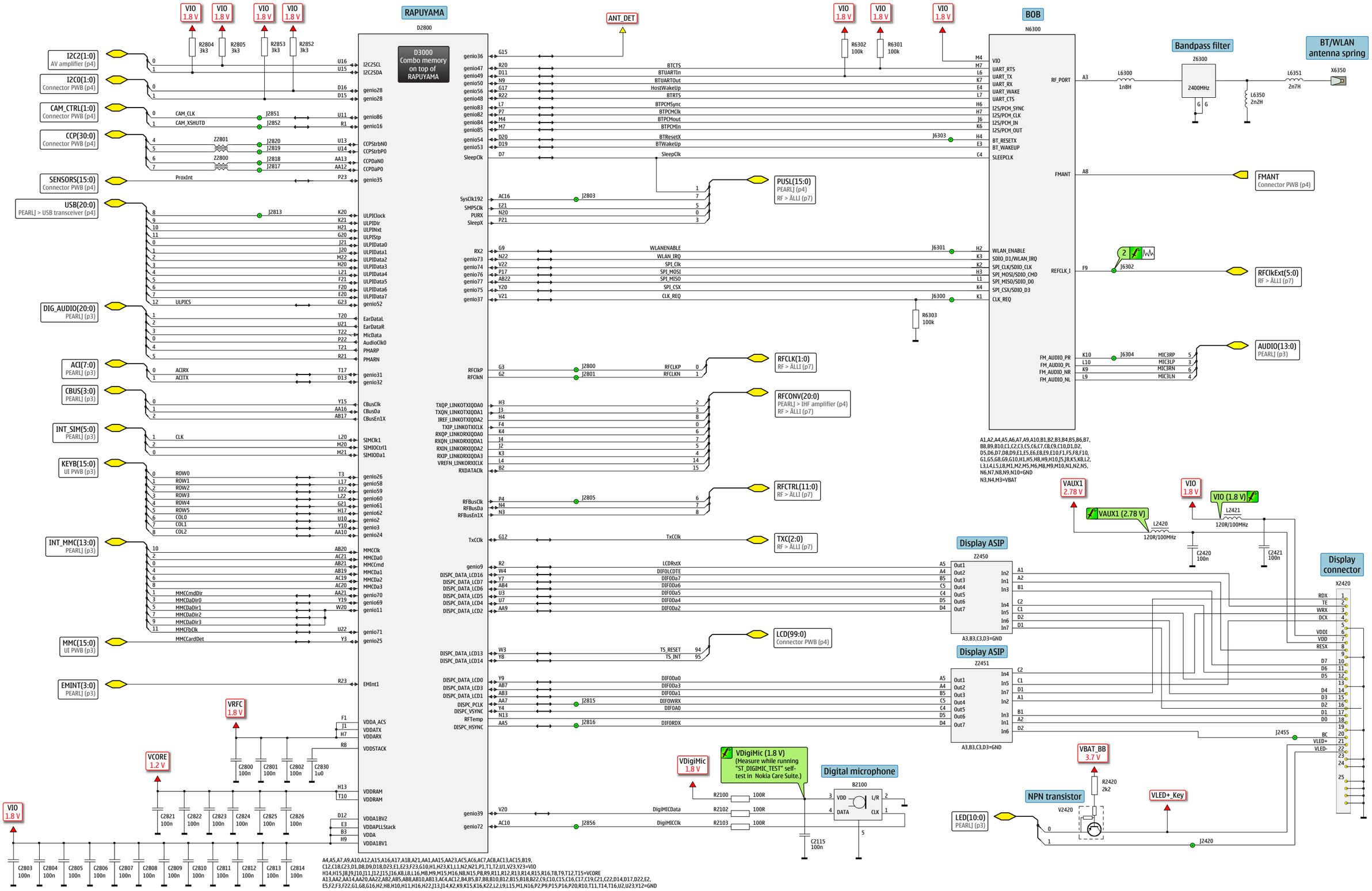

NOKIA Care Academy

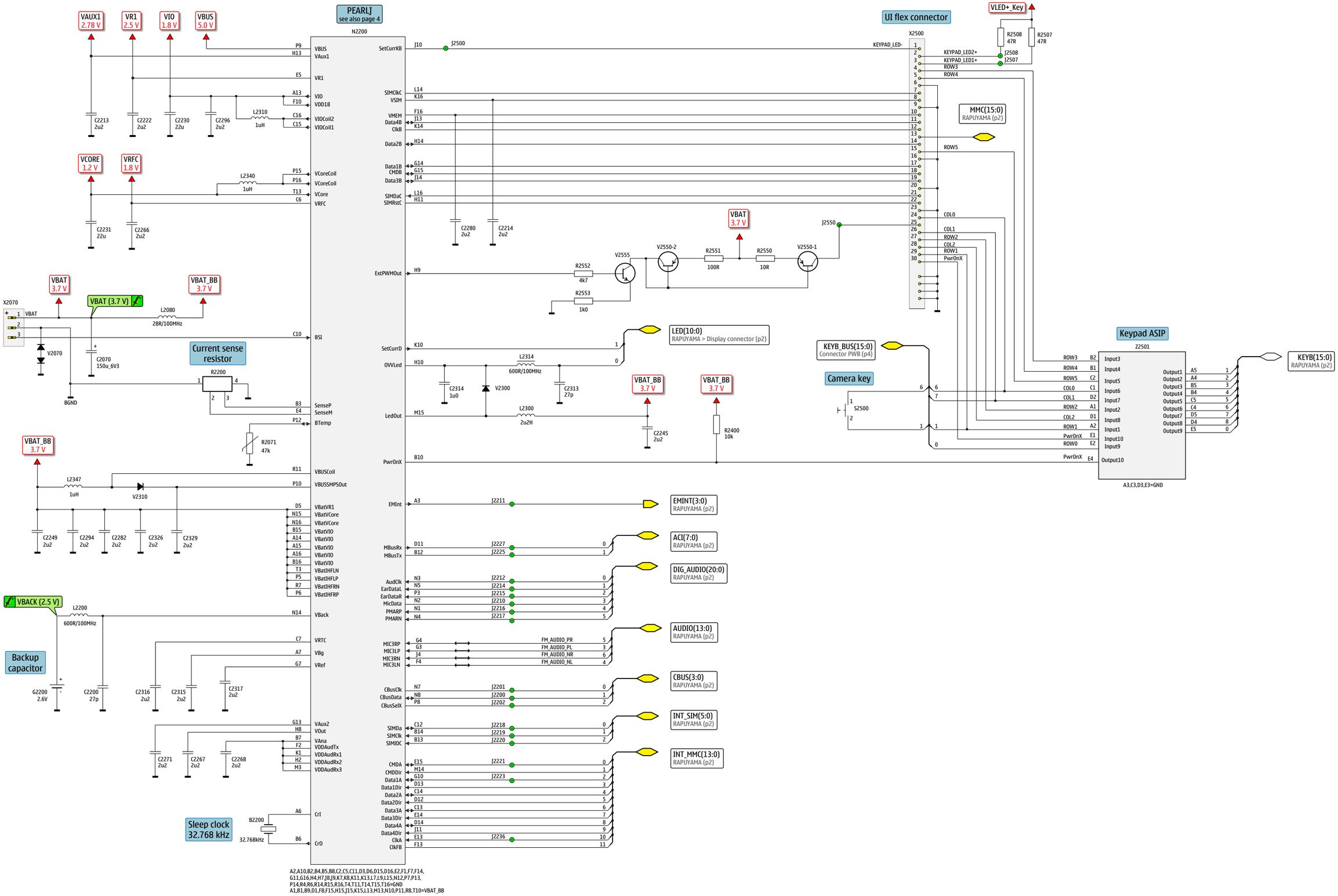

NOKIA Care Academy

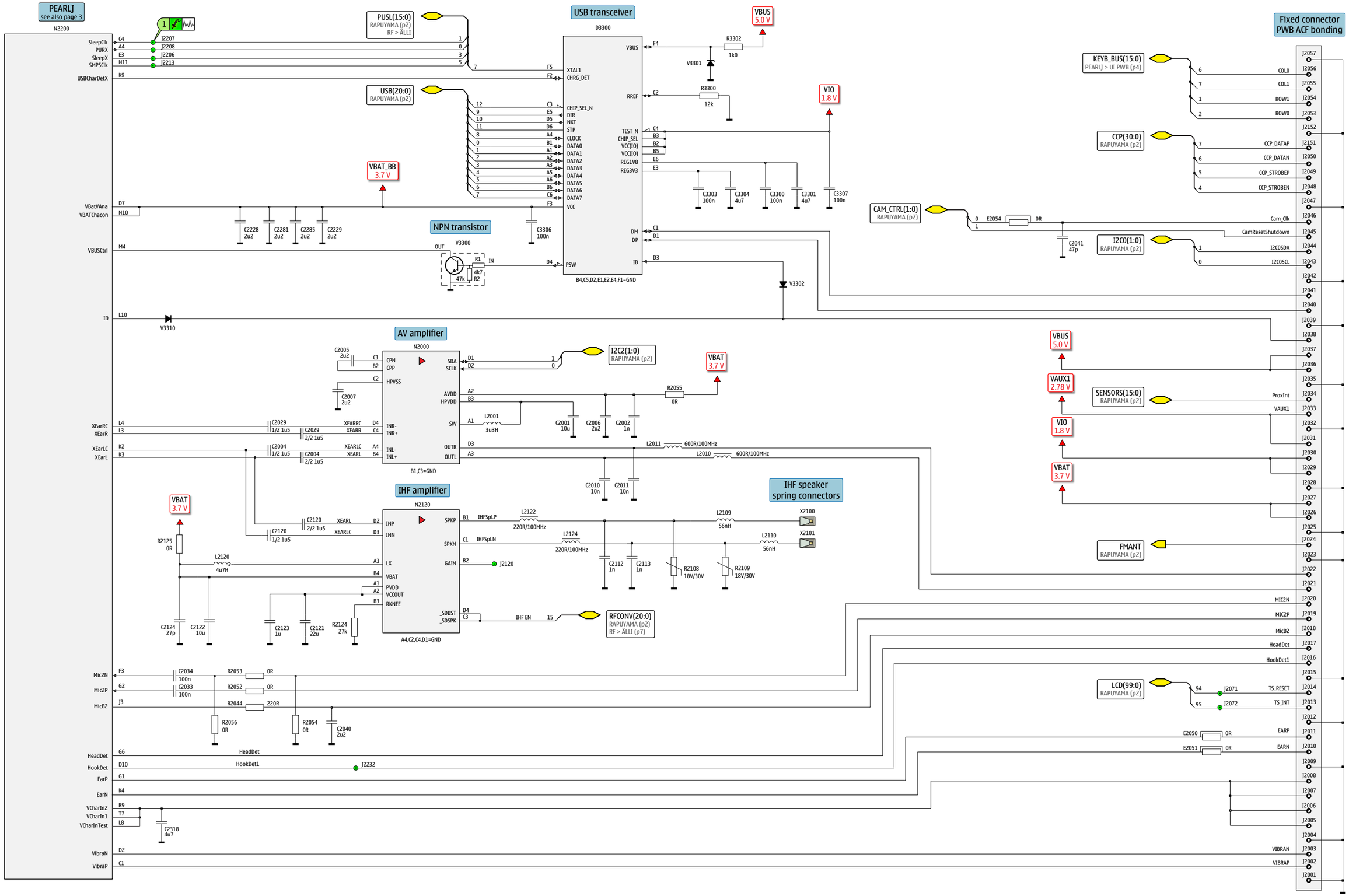

Confidential Copyright © 2010 Nokia. Only for training and service purposes

NOKIA Care Academy

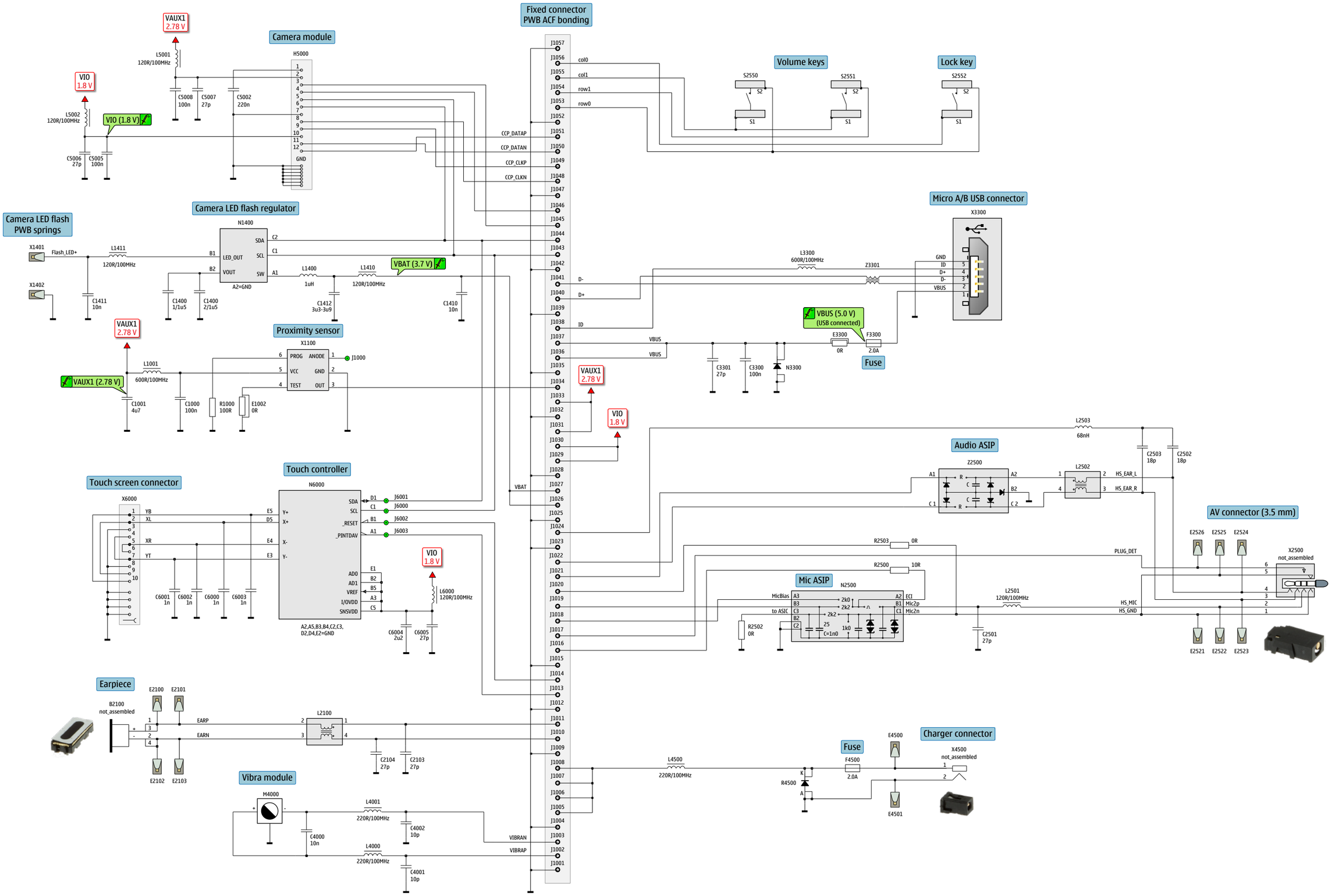

NOKIA Care Academy

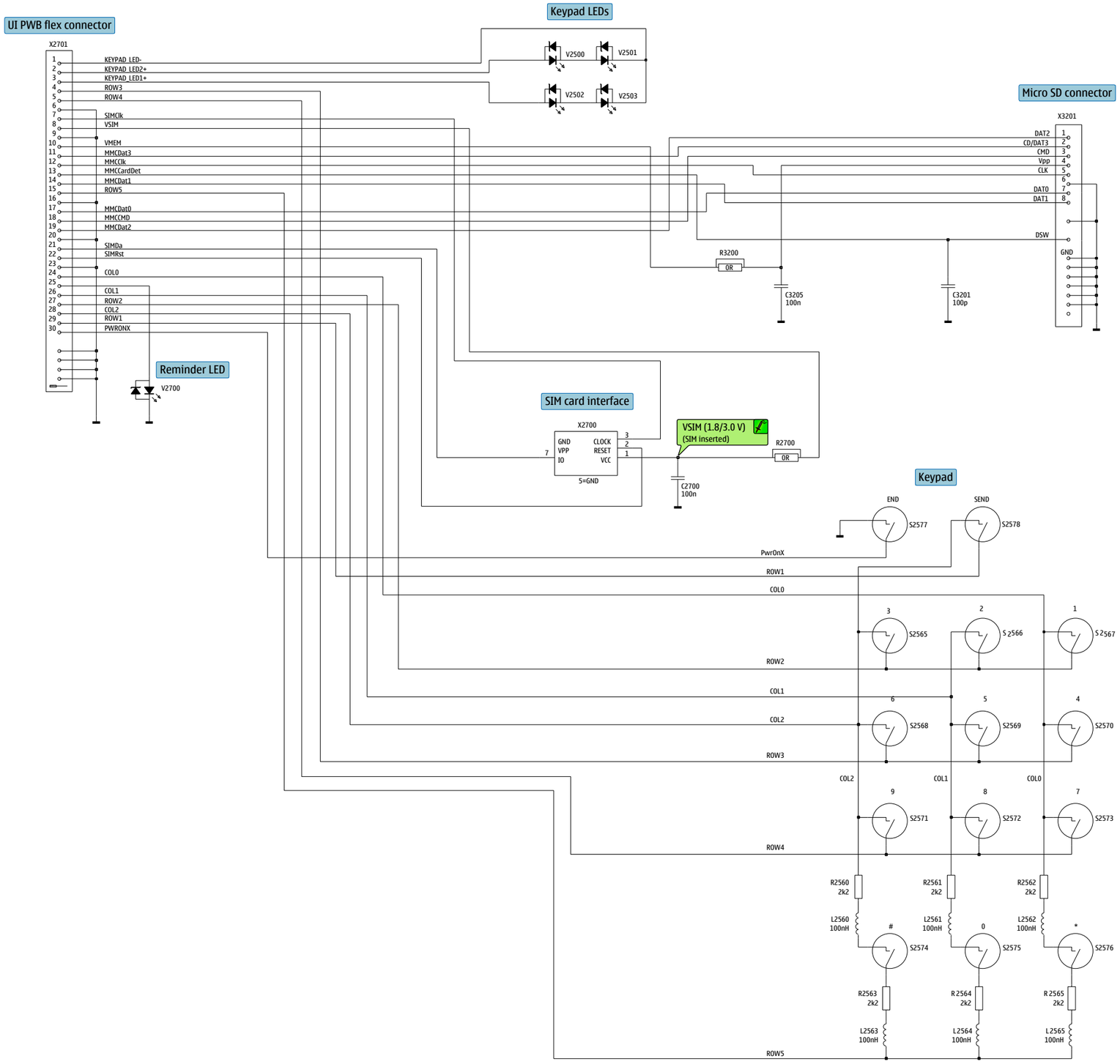

Confidential Copyright © 2010 Nokia. Only for training and service purposes

NOKIA Care
Academy

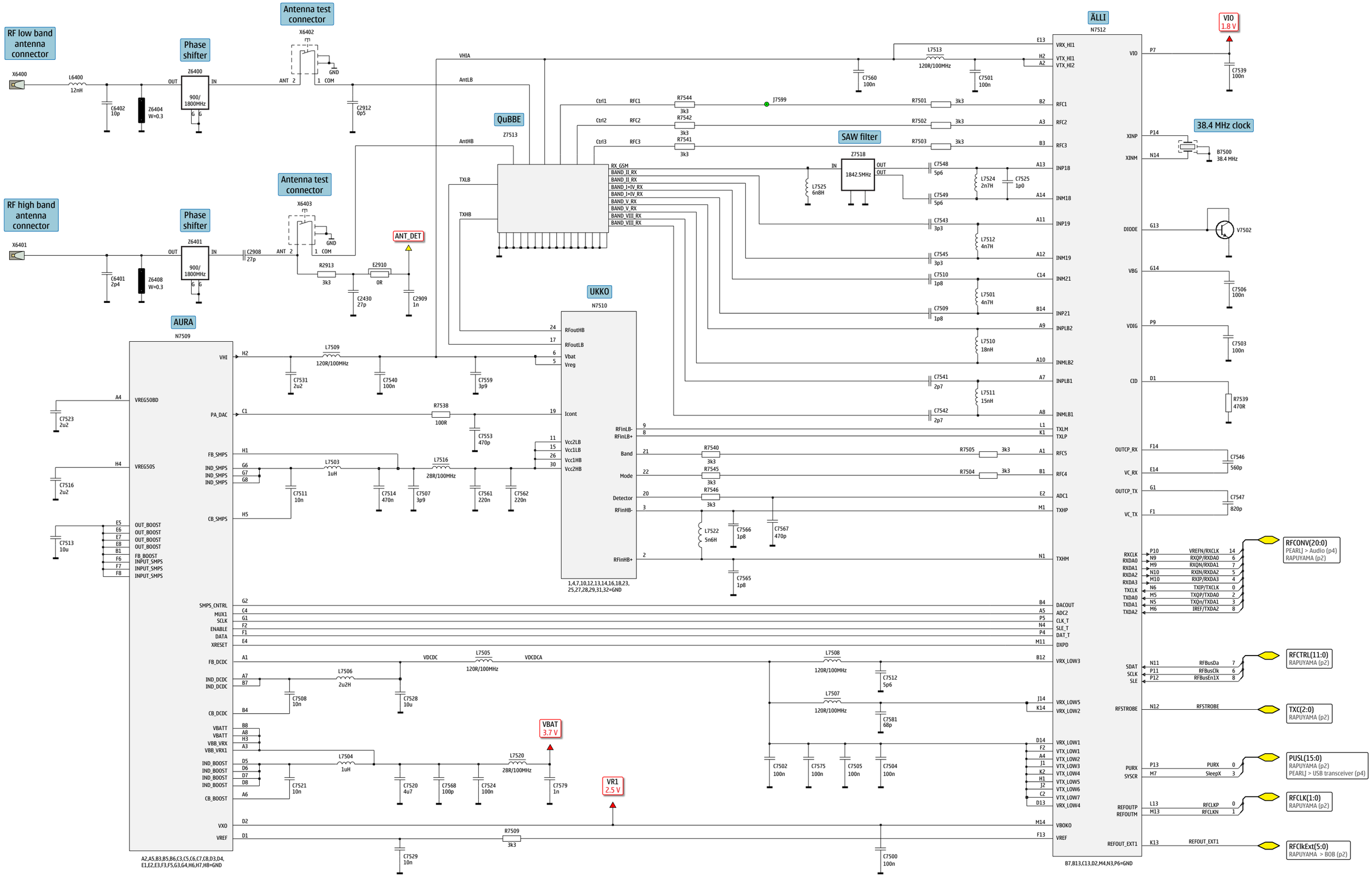

NOKIA Care Academy

1) SleepClk clock at J2207

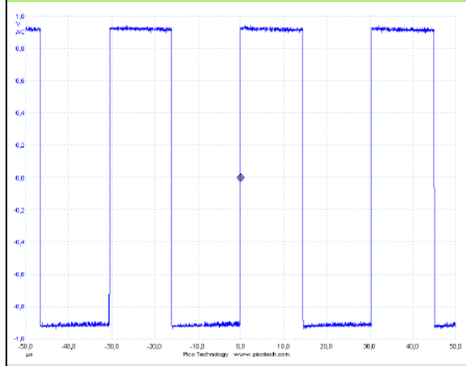

Average 32.768 kHz
10 µs/div, 0.2 V/div, probe x10

2) RefClk_I clock at J6302

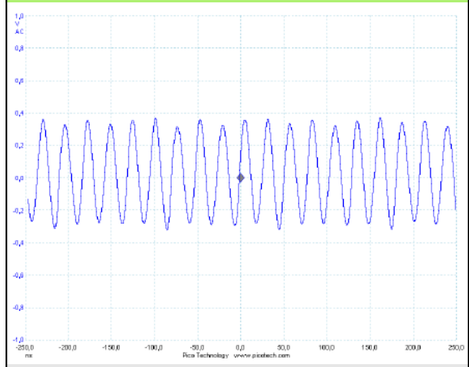

Average 38.4 Mhz
50 ns/div, 0.2 V/div, probe x10
Measure while running “WLAN_TEST” self-test in Nokia Care Suite.

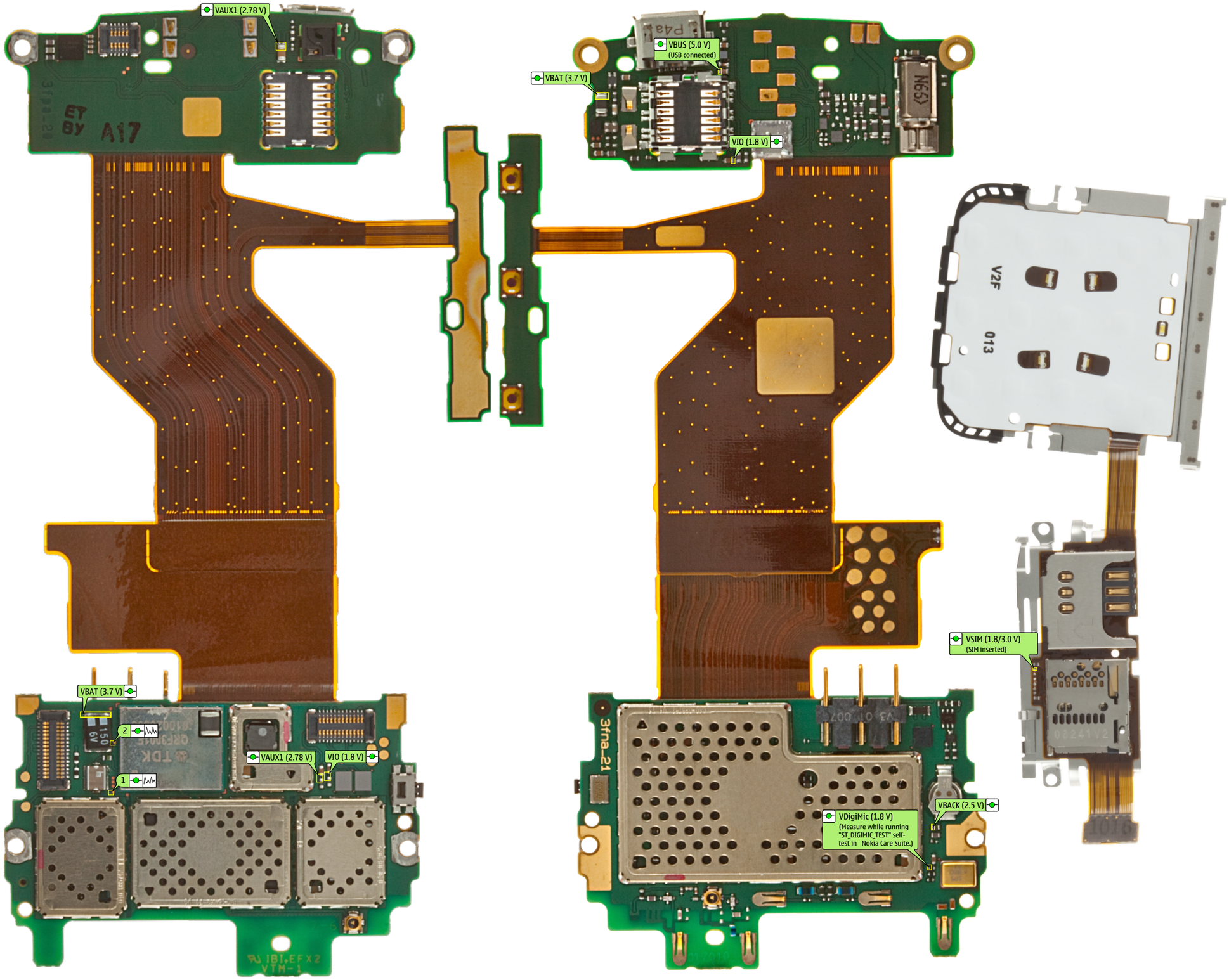

Confidential Copyright © 2010 Nokia. Only for training and service purposes

NOKIA Care Academy

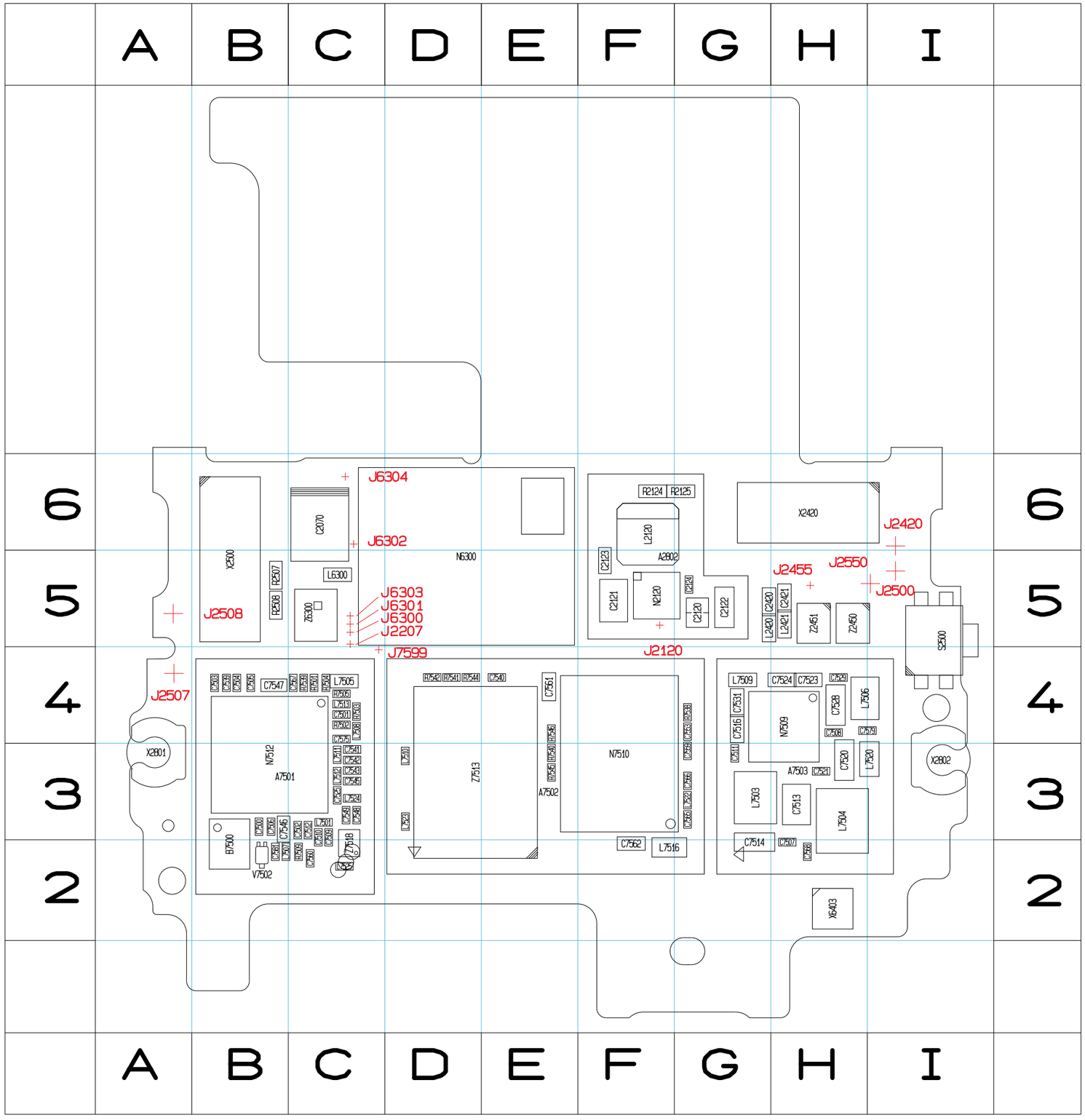

A		C7510	C3	C7560	C2	L7513	C4	R7540	E3
A2802	F5	C7511	G3	C7561	E4	L7516	F2	R7541	D4
A7501	B3	C7512	C3	C7562	F2	L7520	I3	R7542	D4
A7502	E3	C7513	H3	C7565	G3	L7522	G3	R7544	D4
A7503	H3	C7514	G2	C7566	G3	L7523	D3	R7545	E3
B		C7516	G4	C7567	C4	L7524	C3	R7546	E4
B7500	B2	C7520	H3	C7568	H2	L7525	C2	**S**	
C		C7521	H3	C7575	C4	**N**		S2500	I5
C2070	C6	C7523	H4	C7579	I4	N2120	F5	**V**	
C2120	G5	C7524	H4	C7581	B2	N6300	D5	V7502	B2
C2121	F5	C7525	C3	**L**		N7509	H4	**X**	
C2122	G5	C7528	H4	L2120	F6	N7510	F3	X2420	H6
C2123	F5	C7529	H4	L2420	G5	N7512	B3	X2500	B5
C2124	G5	C7531	G4	L2421	H5	**R**		X2801	A3
C2420	G5	C7539	B4	L6300	C5	R2124	F6	X2802	I3
C2421	H5	C7540	E4	L7501	C3	R2125	G6	X6403	H2
C7500	B3	C7541	C3	L7503	G3	R2507	B5	**Z**	
C7501	C4	C7542	C3	L7504	H3	R2508	B5	Z2450	H5
C7502	C3	C7543	C3	L7505	C4	R7501	C4	Z2451	H5
C7503	B4	C7545	C3	L7506	H4	R7502	C4	Z6300	C5
C7504	B4	C7546	B3	L7507	B2	R7503	C4	Z7513	D3
C7505	B4	C7547	B4	L7508	C4	R7504	C4	Z7518	C2
C7506	B3	C7548	C3	L7509	G4	R7505	C4		
C7507	H2	C7549	C3	L7510	D3	R7509	C2		
C7508	H4	C7553	G4	L7511	C3	R7538	G4		
C7509	C3	C7559	G3	L7512	C3	R7539	C4		

Confidential Copyright © 2010 Nokia. Only for training and service purposes

NOKIA Care Academy

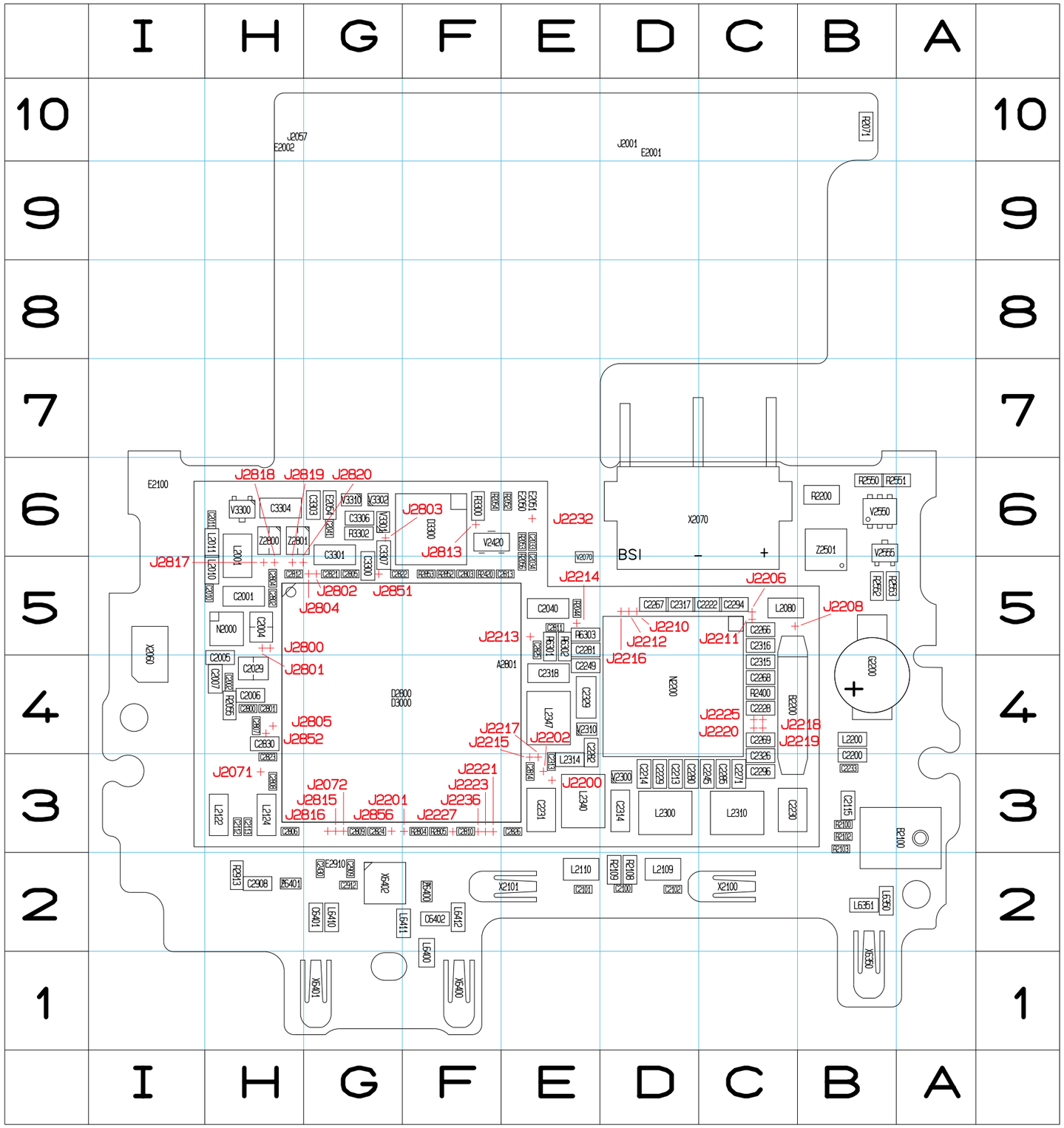

A		C2229	D3	C2804	H5	D2800	G4	R2044	E5	V2070	E5
A2801	E4	C2230	C3	C2805	G5	D3000	G4	R2052	E6	V2300	D3
B		C2231	E3	C2806	H3	D3300	F6	R2053	E6	V2310	E4
B2100	B3	C2233	B3	C2807	H4	**G**		R2054	F6	V2420	F6
B2200	C4	C2245	C3	C2808	H3	G2200	B4	R2055	H4	V2550	B6
C		C2249	E4	C2809	G3	**L**		R2056	E5	V2555	B6
C2001	H5	C2266	C5	C2810	F3	L2001	H6	R2071	B10	V3300	H6
C2002	H4	C2267	D5	C2811	E5	L2010	H5	R2100	B3	V3301	G6
C2004	H5	C2268	C4	C2812	H5	L2011	H6	R2102	B3	V3302	G6
C2005	H4	C2269	C4	C2813	E5	L2080	C5	R2103	B3	V3310	G6
C2006	H4	C2271	C3	C2814	E3	L2109	D2	R2108	D2	**X**	
C2007	H4	C2280	D3	C2821	G5	L2110	E2	R2109	D2	X2060	I5
C2010	H5	C2281	E5	C2822	G5	L2122	H3	R2200	B6	X2070	D6
C2011	H6	C2282	E4	C2823	H3	L2124	H3	R2400	C4	X2100	C2
C2029	H4	C2285	C3	C2824	G3	L2200	B4	R2420	F5	X2101	E2
C2033	E6	C2294	C5	C2825	E5	L2300	D3	R2550	B6	X6350	B1
C2034	E5	C2296	C3	C2826	E3	L2310	C3	R2551	B6	X6400	F1
C2040	E5	C2313	E3	C2830	H4	L2314	E3	R2552	B5	X6401	G1
C2041	G6	C2314	D3	C2908	H2	L2340	E3	R2553	B5	X6402	G2
C2100	D2	C2315	C4	C2909	G2	L2347	E4	R2804	F3	**Z**	
C2101	E2	C2316	C5	C2912	G2	L6350	B2	R2805	F3	Z2501	B6
C2102	D2	C2317	D5	C3300	G5	L6351	B2	R2852	F5	Z2800	H6
C2112	H3	C2318	E4	C3301	G6	L6400	F1	R2853	F5	Z2801	H6
C2113	H3	C2326	C3	C3303	G6	L6410	G2	R2913	H2	Z6400	F2
C2115	B3	C2329	E4	C3304	H6	L6411	F2	R3300	F6	Z6401	H2
C2200	B3	C2430	G2	C3306	G6	L6412	F2	R3302	G6		
C2213	D3	C2800	H4	C3307	G6	**N**		R6301	E5		
C2214	D3	C2801	H4	C6401	G2	N2000	H5	R6302	E5		
C2222	C5	C2802	H5	C6402	F2	N2200	D4	R6303	E5		
C2228	C4	C2803	F5	**D**		**R**		**V**			

Confidential Copyright © 2010 Nokia. Only for training and service purposes

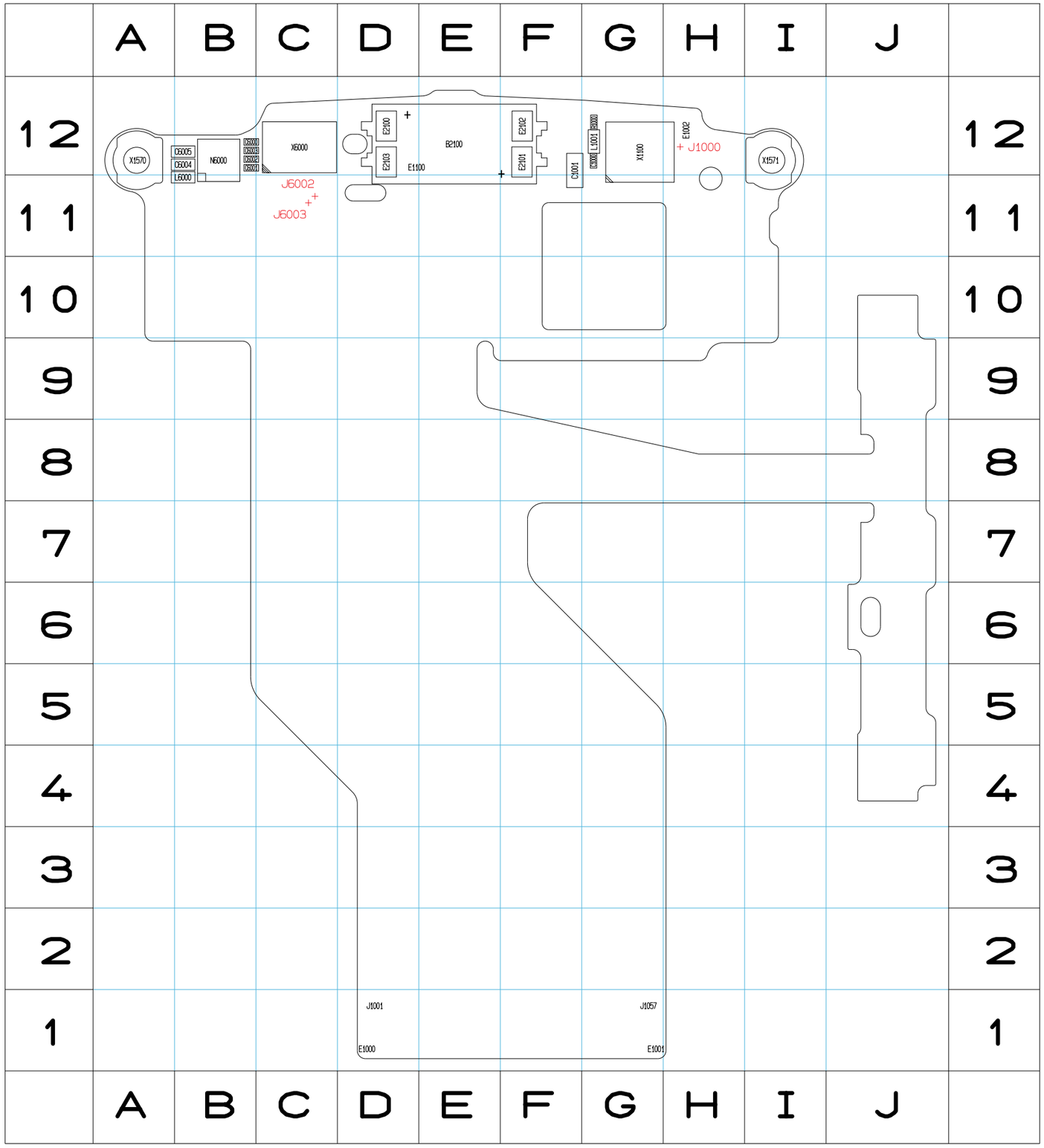

B		E2102	F12
B2100	E12	E2103	D12
C		**L**	
C1000	G12	L1001	G12
C1001	F12	L6000	B11
C6000	B12	**N**	
C6001	B12	N6000	B12
C6002	B12	**R**	
C6003	B12	R1000	G12
C6004	B12	**X**	
C6005	B12	X1100	G12
E		X1570	A12
E2100	D12	X1571	I12
E2101	F12	X6000	C12

Confidential Copyright © 2010 Nokia. Only for training and service purposes

NOKIA Care Academy

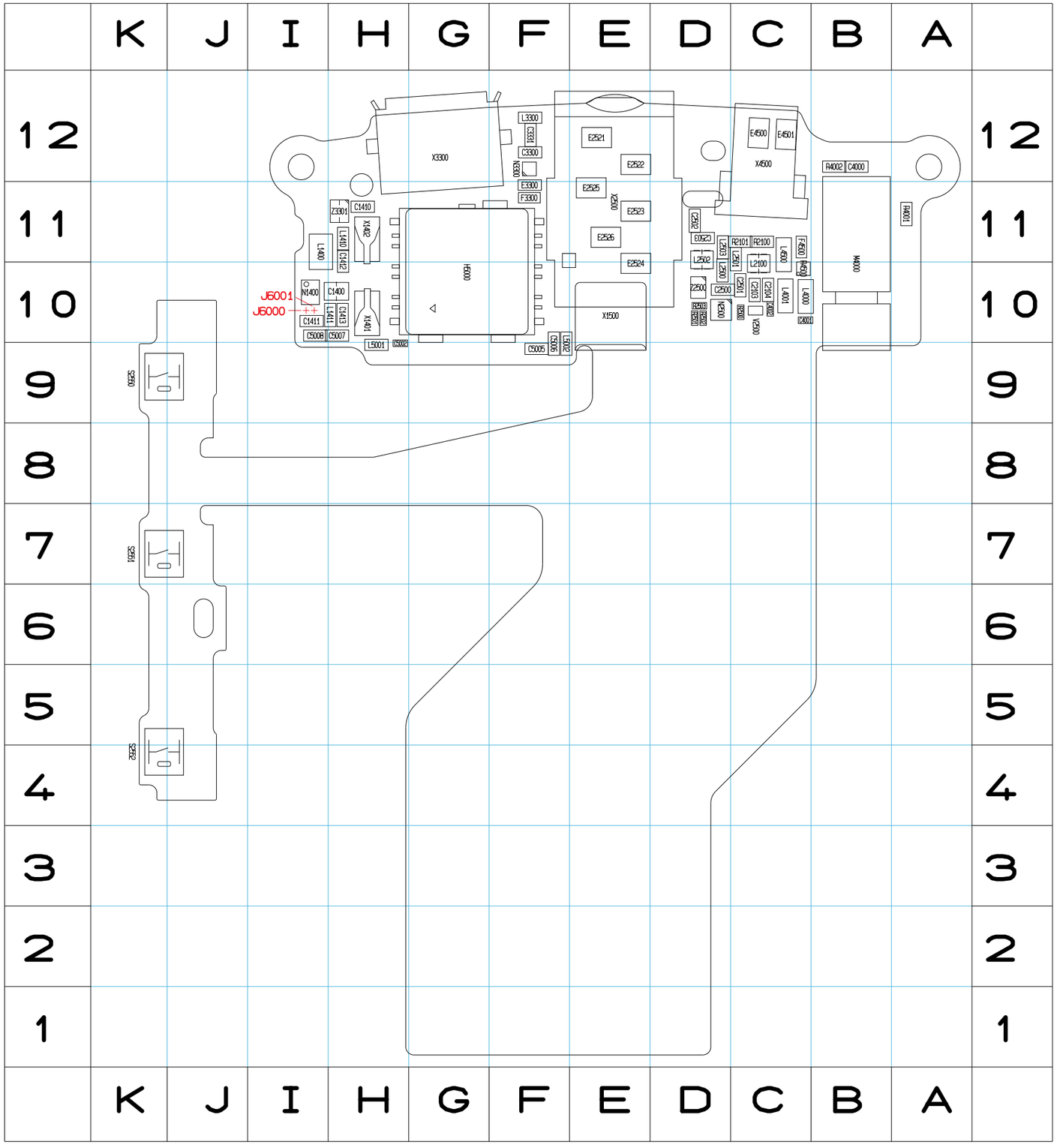

C		E4500	C12	N3300	F12
C1400	H10	E4501	C12	**R**	
C1410	H11	**F**		R2500	C10
C1411	I10	F3300	F11	R2501	D10
C1412	H11	F4500	C11	R2502	D10
C2103	C10	**H**		R2503	D10
C2104	C10	H5000	G10	R4500	C10
C2501	C10	**L**		**S**	
C2502	D11	L1400	I11	S2550	K9
C2503	D11	L1410	H11	S2551	K7
C3300	F12	L1411	H10	S2552	K4
C3331	F12	L2100	C10	**V**	
C4000	B12	L2500	D10	V2500	C10
C4001	C10	L2501	C11	**X**	
C4002	C10	L2502	D11	X1401	H10
C5002	H9	L2503	D11	X1402	H11
C5005	F9	L3300	F12	X1500	E10
C5006	F9	L4000	C10	X2500	E11
C5007	H10	L4001	C10	X3300	G12
C5008	I10	L4500	C11	X4500	C12
E		L5001	H9	**Z**	
E2521	E12	L5002	F9	Z2500	D10
E2522	E12	**M**		Z3301	H11
E2523	E11	M4000	B11		
E2524	E10	**N**			
E2525	E11	N1400	I10		
E2526	E11	N2500	D10		

Confidential Copyright © 2010 Nokia. Only for training and service purposes

NOKIA Care Academy

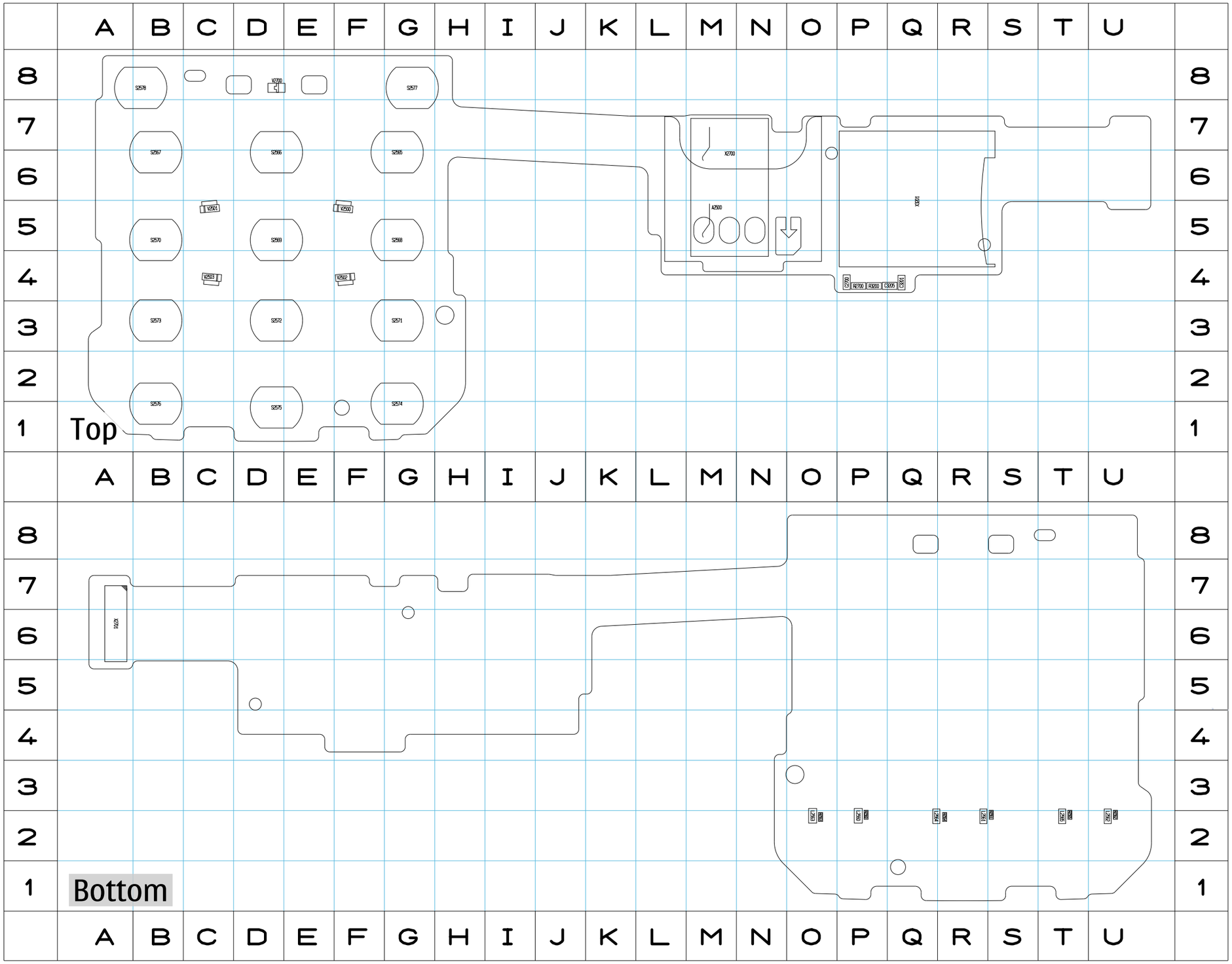

A		R2561	S2
A2500	N6	R2562	U2
C		R2563	z
C2700	P4	R2564	R2
C3201	Q4	R2565	T2
C3205	Q4	**V**	
L		V2500	F5
L2560	P2	V2501	C5
L2561	R2	V2502	F4
L2562	U2	V2503	C4
L2563	O2	V2700	D8
L2564	Q2	**X**	
L2565	T2	X2700	M6
R		X2701	A6
R2560	P2	X3201	Q6

Confidential Copyright © 2010 Nokia. Only for training and service purposes