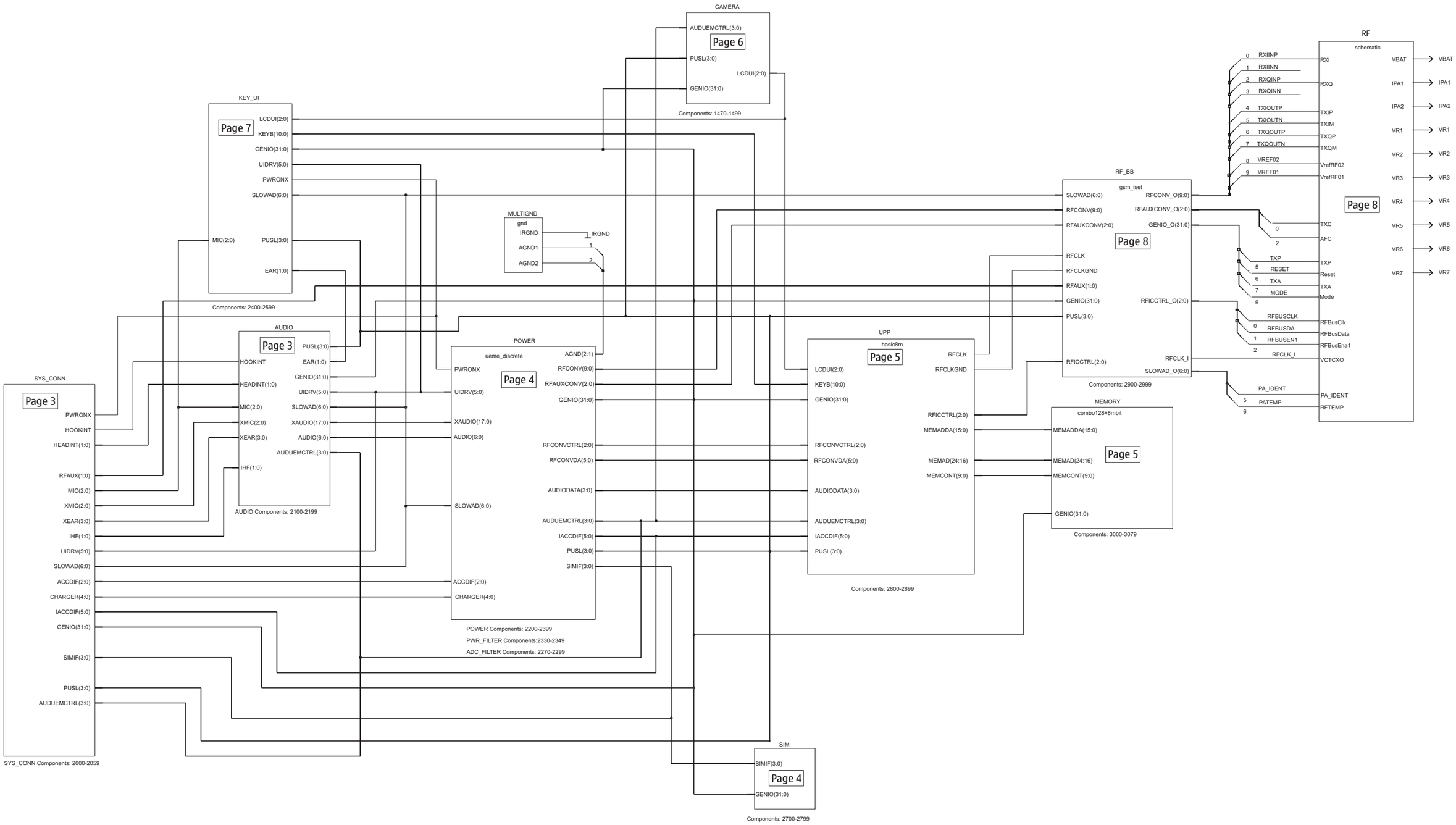

Copyright © 2004 NOKIA Only for training and service purposes

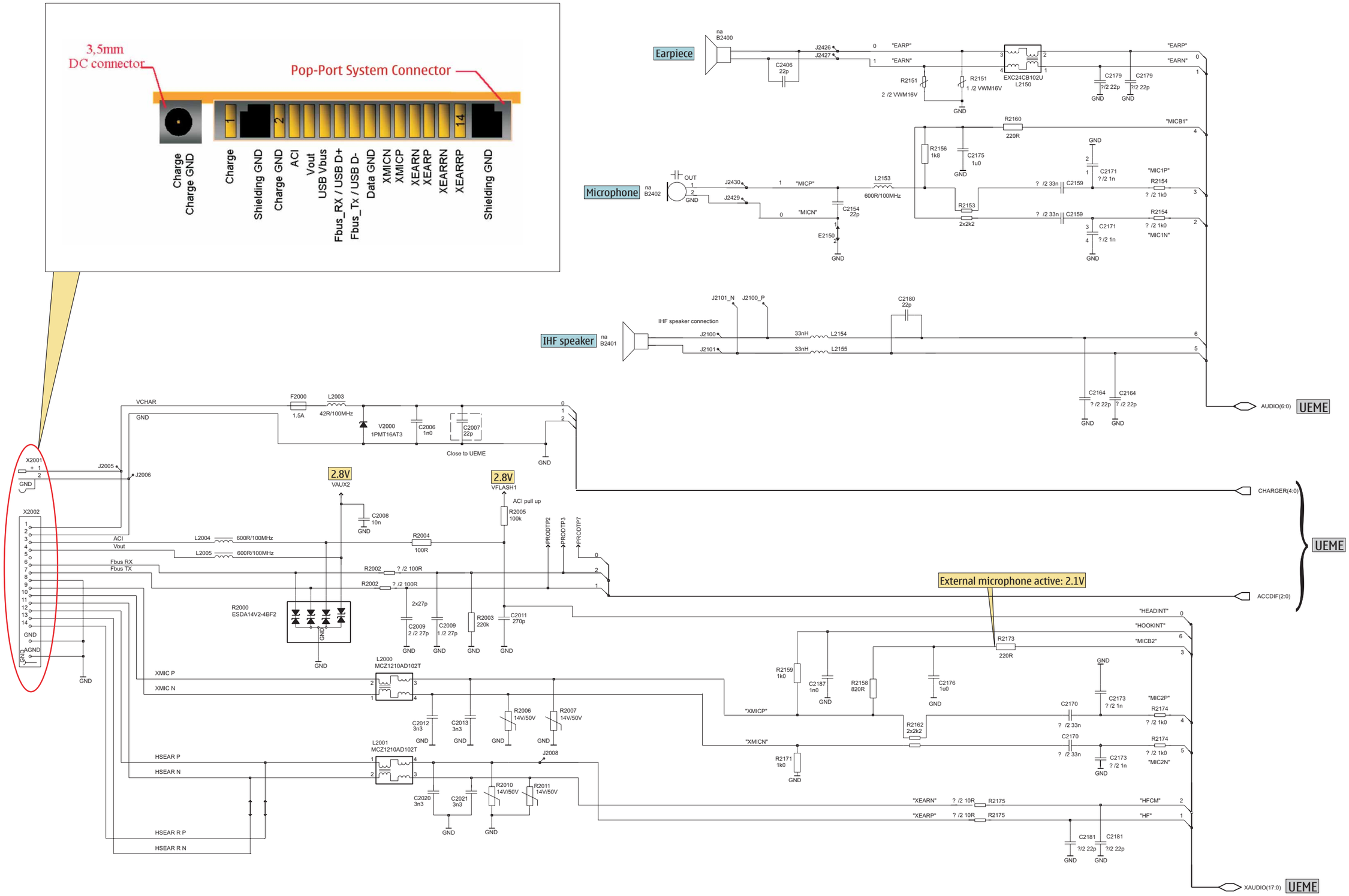

Copyright © 2004 NOKIA Only for training and service purposes

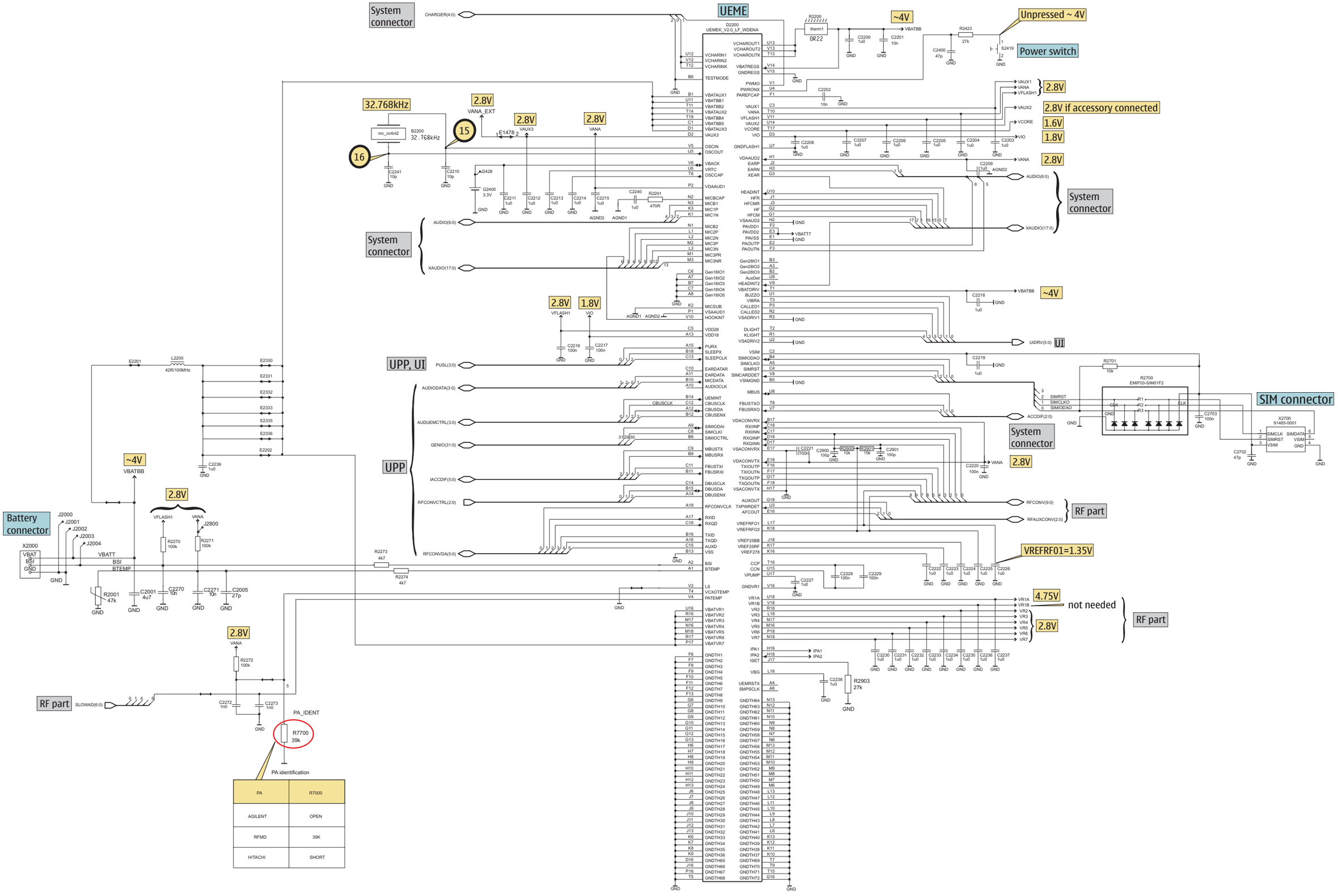

PA	R7000
AGILENT	OPEN
RFMD	39K
HITACHI	SHORT

Copyright © 2004 NOKIA Only for training and service purposes

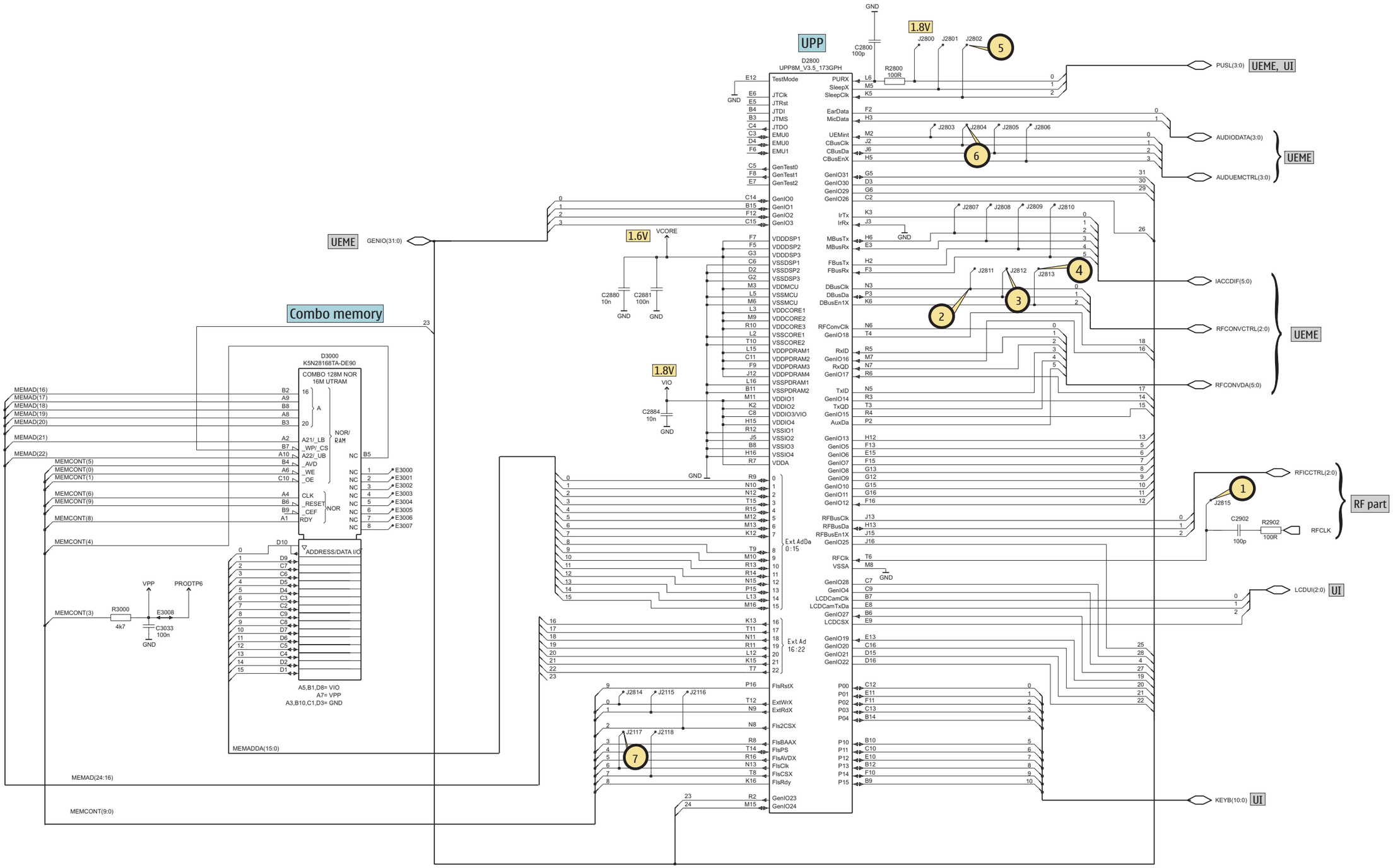

Copyright © 2004 NOKIA Only for training and service purposes

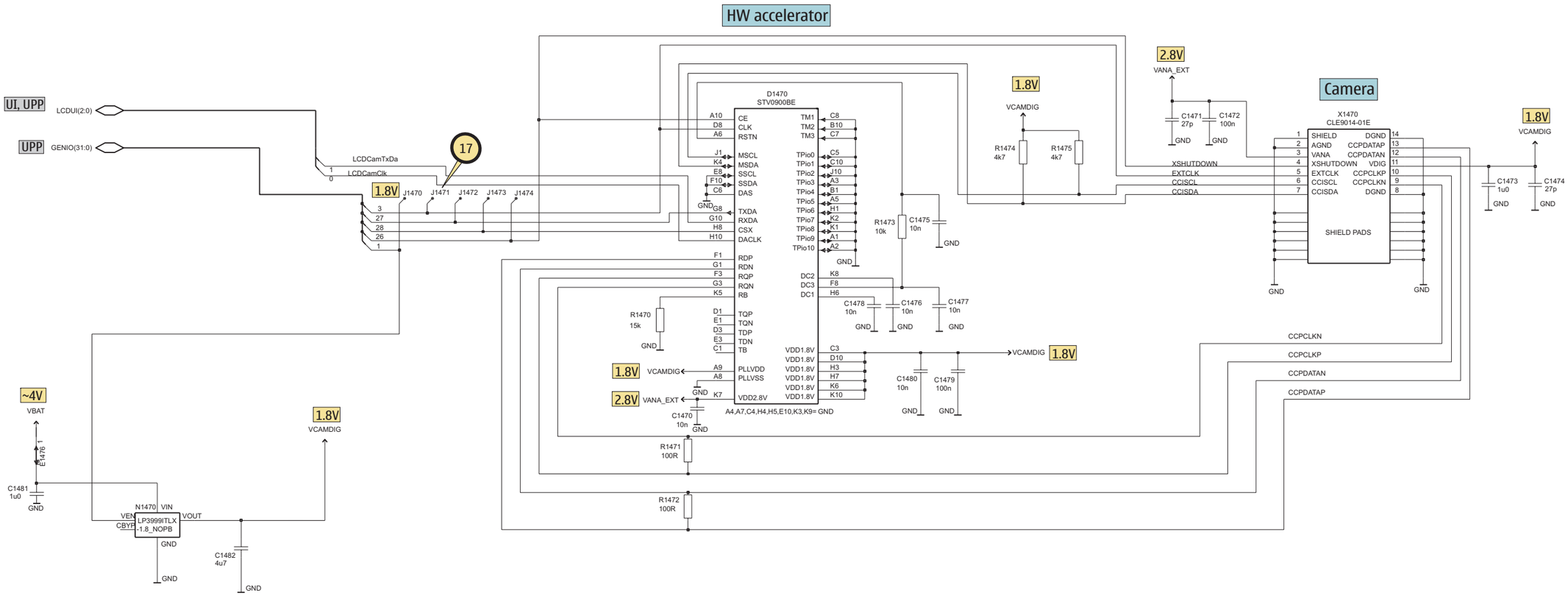

Copyright © 2004 NOKIA Only for training and service purposes

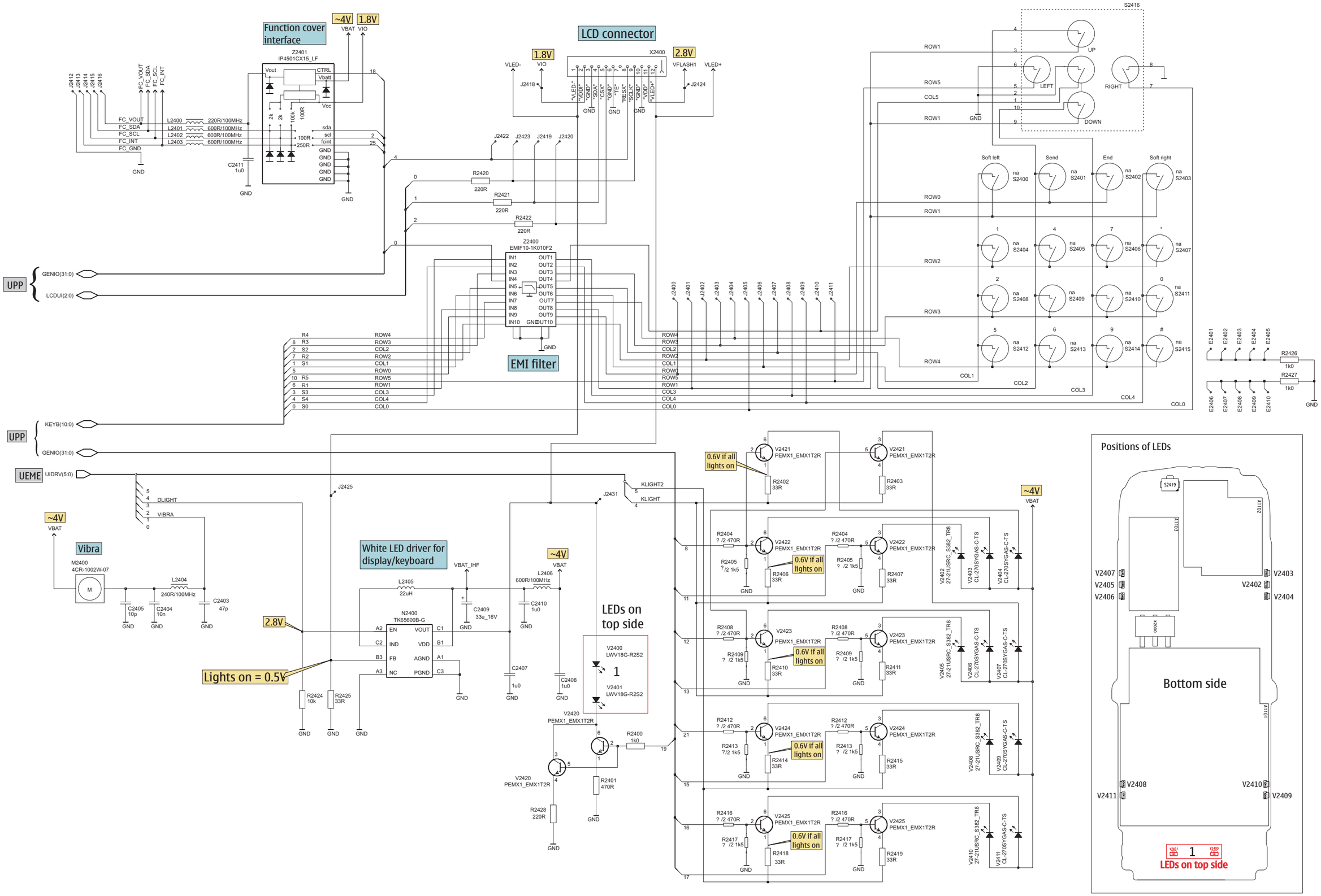

Copyright © 2004 NOKIA Only for training and service purposes