3585i Top Level Overview

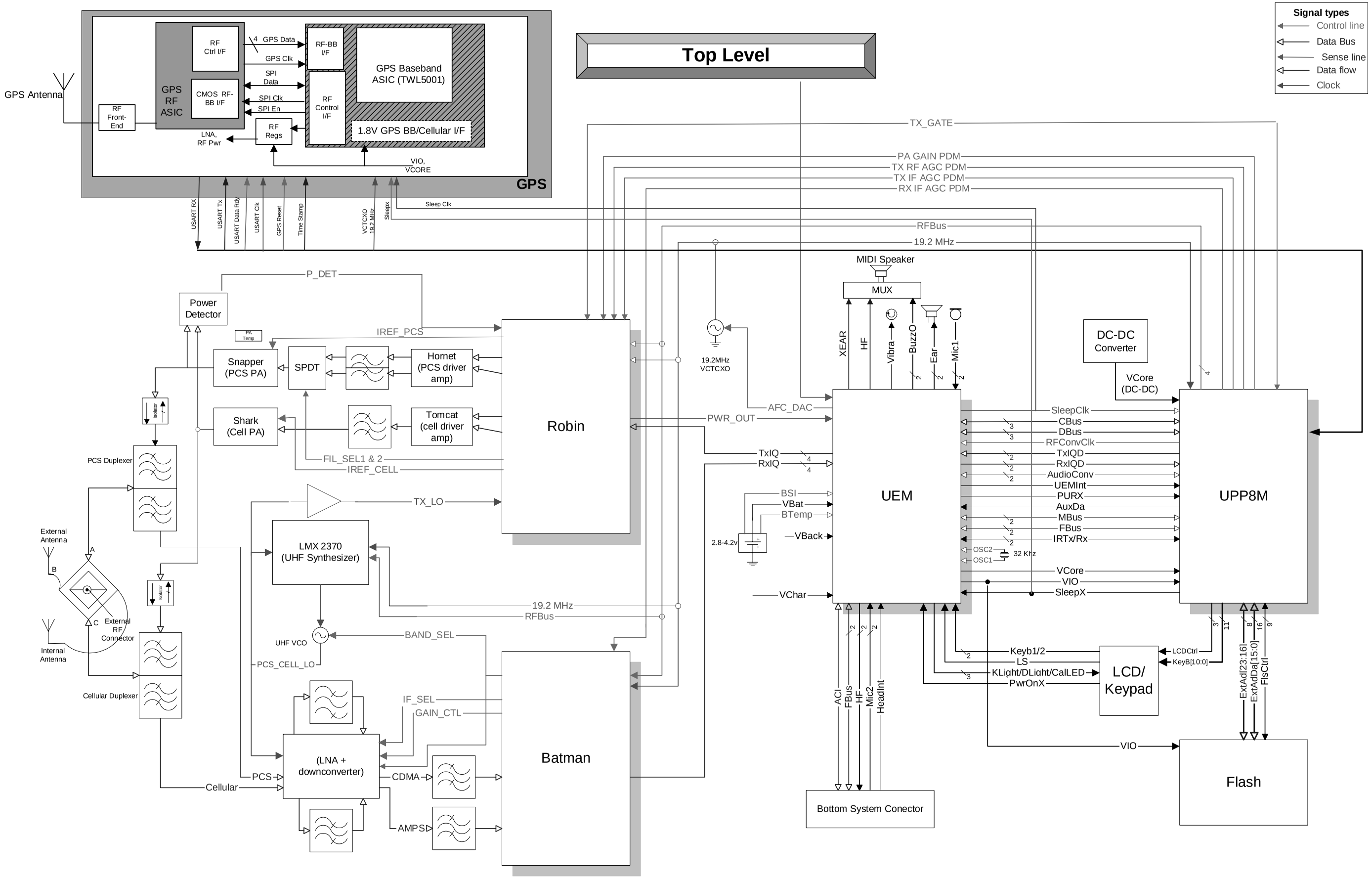

Audio

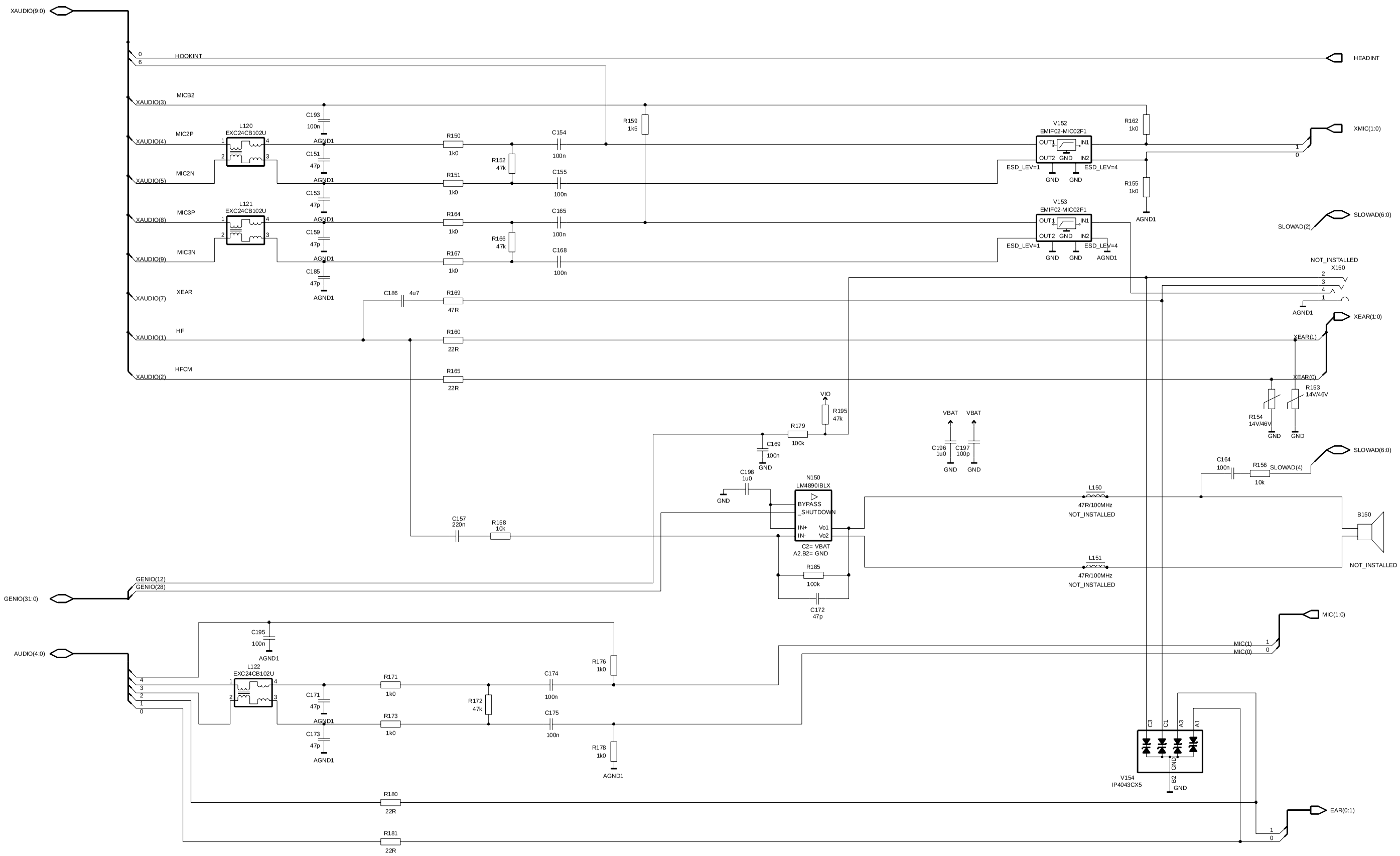
XAUDIO(9:0)
HOOKINT
HEADINT
MICB2
XAUDIO(3)
MIC2P
XAUDIO(4)
MIC2N
XAUDIO(5)
MIC3P
XAUDIO(8)
MIC3N
XAUDIO(9)
XEAR
XAUDIO(7)
HF
XAUDIO(1)
HFCM
XAUDIO(2)
L120
EXC24CB102U
L121
EXC24CB102U
C193
100n
C151
47p
C153
47p
C159
47p
C185
47p
AGND1
R150
1k0
R151
1k0
R164
1k0
R167
1k0
R152
47k
R166
47k
C154
100n
C155
100n
C165
100n
C168
100n
R159
1k5
V152
EMIF02-MIC02F1
V153
EMIF02-MIC02F1
OUT1
IN1
OUT2
GND
IN2
ESD_LEV=1
ESD_LEV=4
R162
1k0
R155
1k0
XMIC(1:0)
SLOWAD(6:0)
SLOWAD(2)
NOT_INSTALLED
X150
C186
4u7
R169
47R
R160
22R
R165
22R
XEAR(1:0)
XEAR(1)
XEAR(0)
R153
14V/46V
R154
14V/46V
GND
VIO
R195
47k
R179
100k
C169
100n
VBAT
C196
1u0
C197
100p
C198
1u0
N150
LM4890IBLX
BYPASS
_SHUTDOWN
IN+
IN-
Vo1
Vo2
C2= VBAT
A2,B2= GND
C164
100n
R156
10k
SLOWAD(4)
L150
47R/100MHz
NOT_INSTALLED
L151
47R/100MHz
NOT_INSTALLED
B150
C157
220n
R158
10k
R185
100k
C172
47p
GENIO(12)
GENIO(28)
GENIO(31:0)
AUDIO(4:0)
C195
100n
L122
EXC24CB102U
C171
47p
C173
47p
R171
1k0
R173
1k0
R172
47k
C174
100n
C175
100n
R176
1k0
R178
1k0
MIC(1:0)
MIC(1)
MIC(0)
V154
IP4043CX5
C3
C1
A3
A1
B2
R180
22R
R181
22R
EAR(0:1)

DCT4 Common Baseband

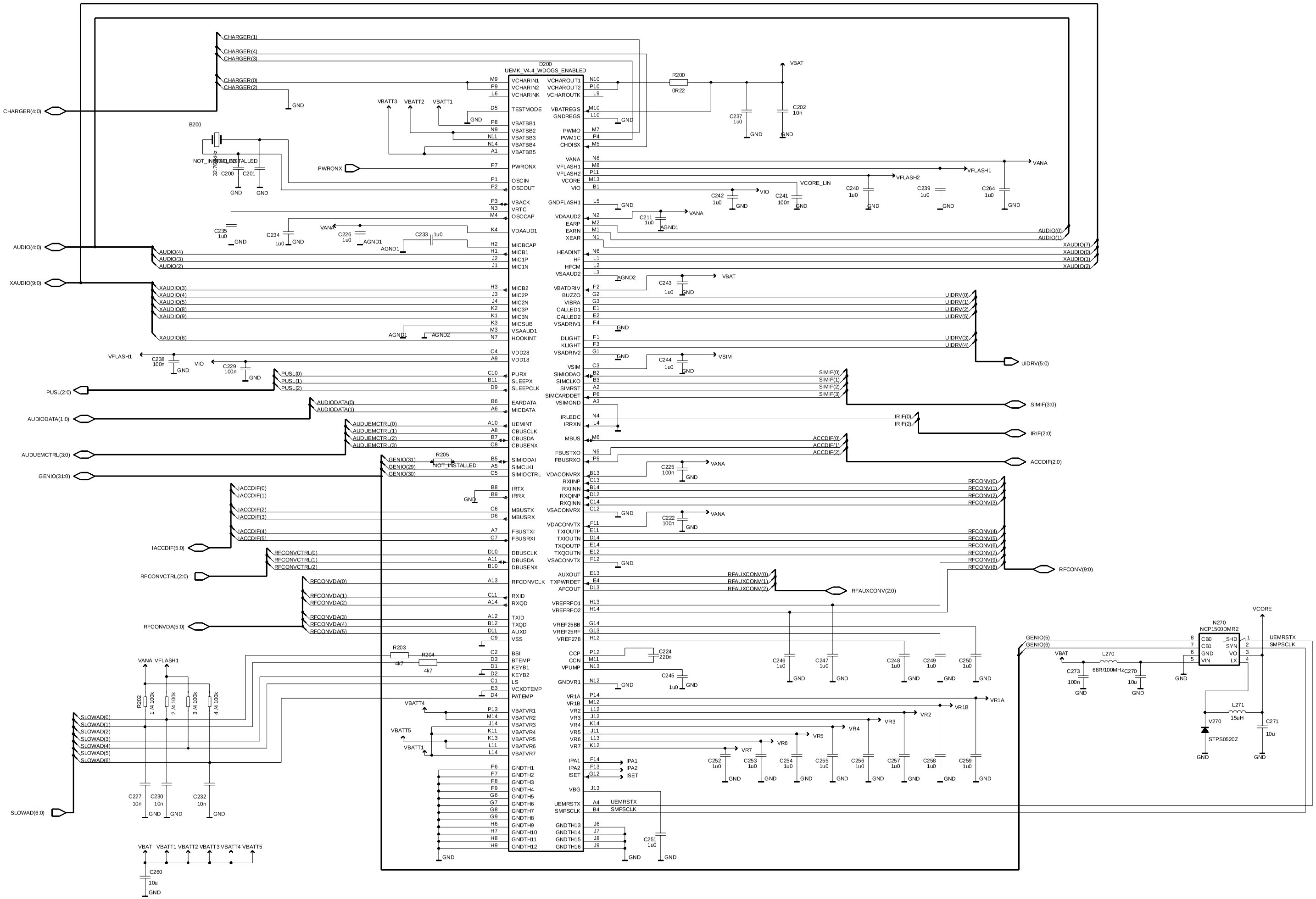

GPS RF Circuit Diagram

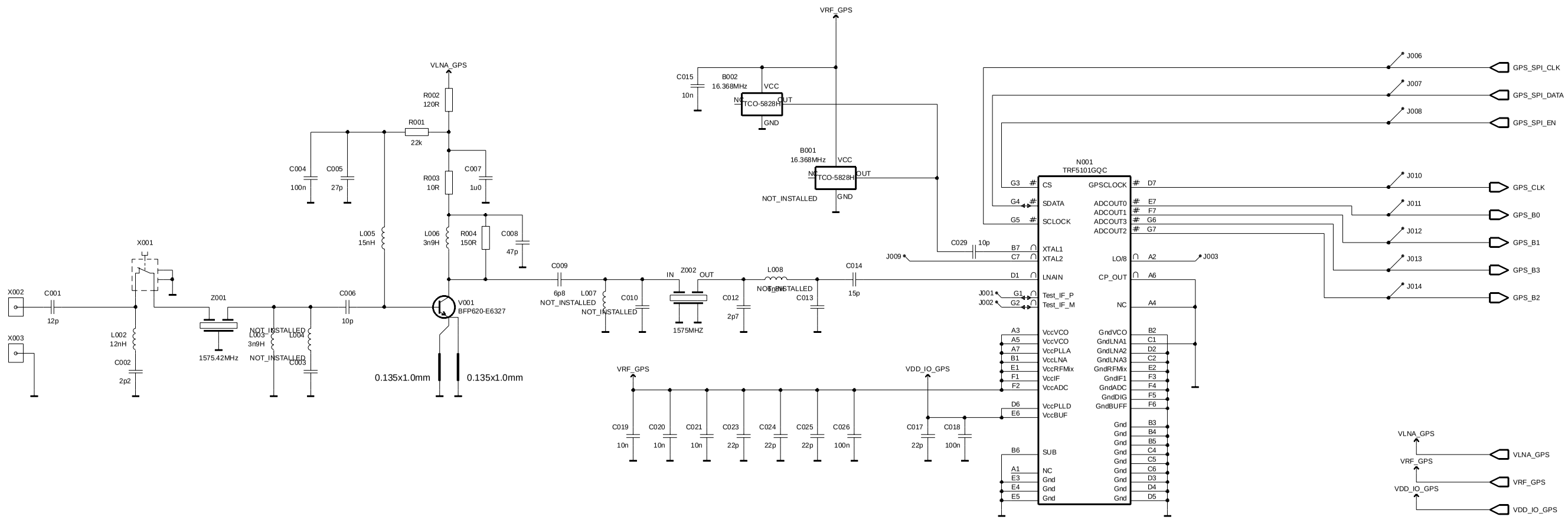

GPS Baseband Circuit Diagram

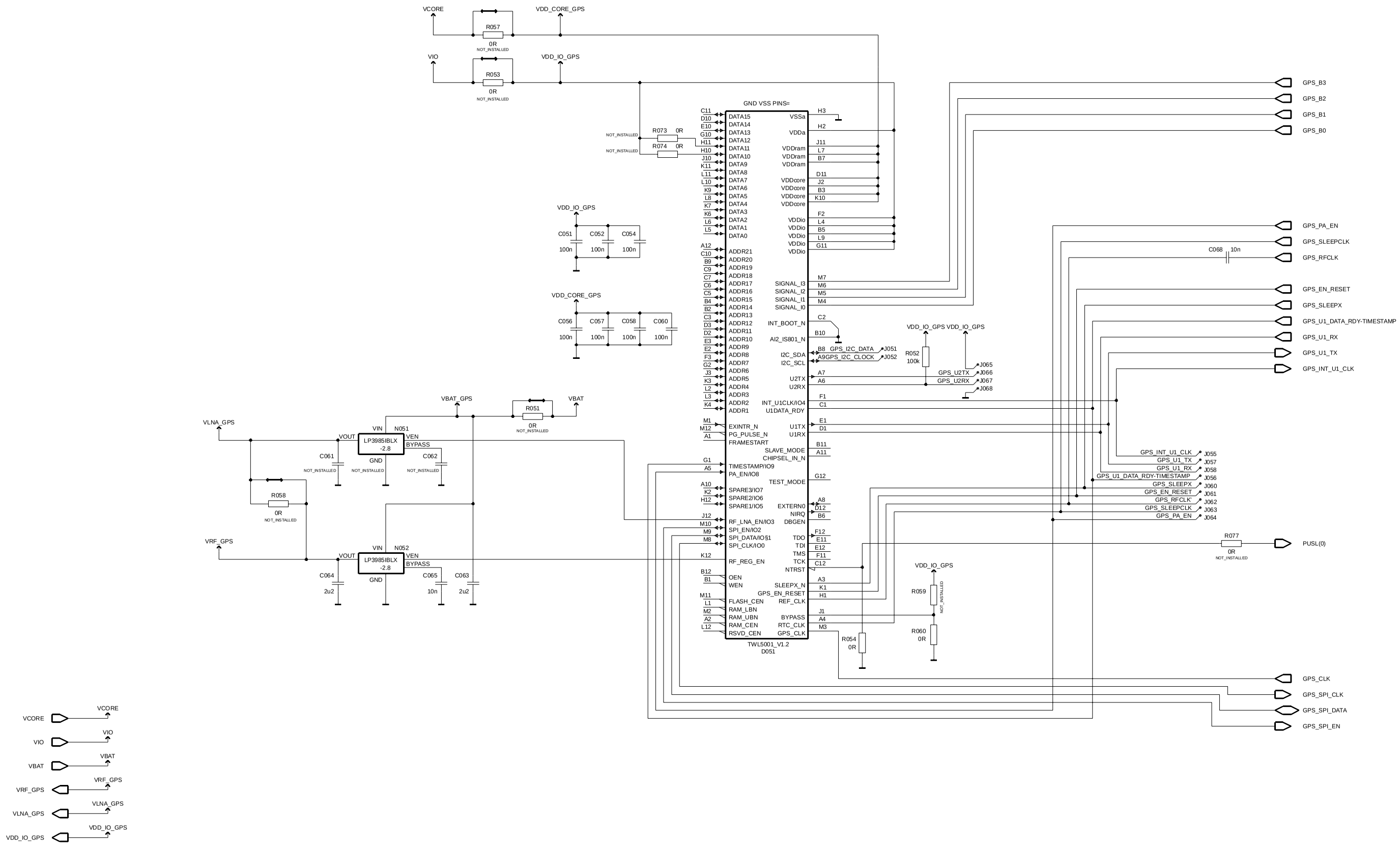

GPS RF-BB Interface

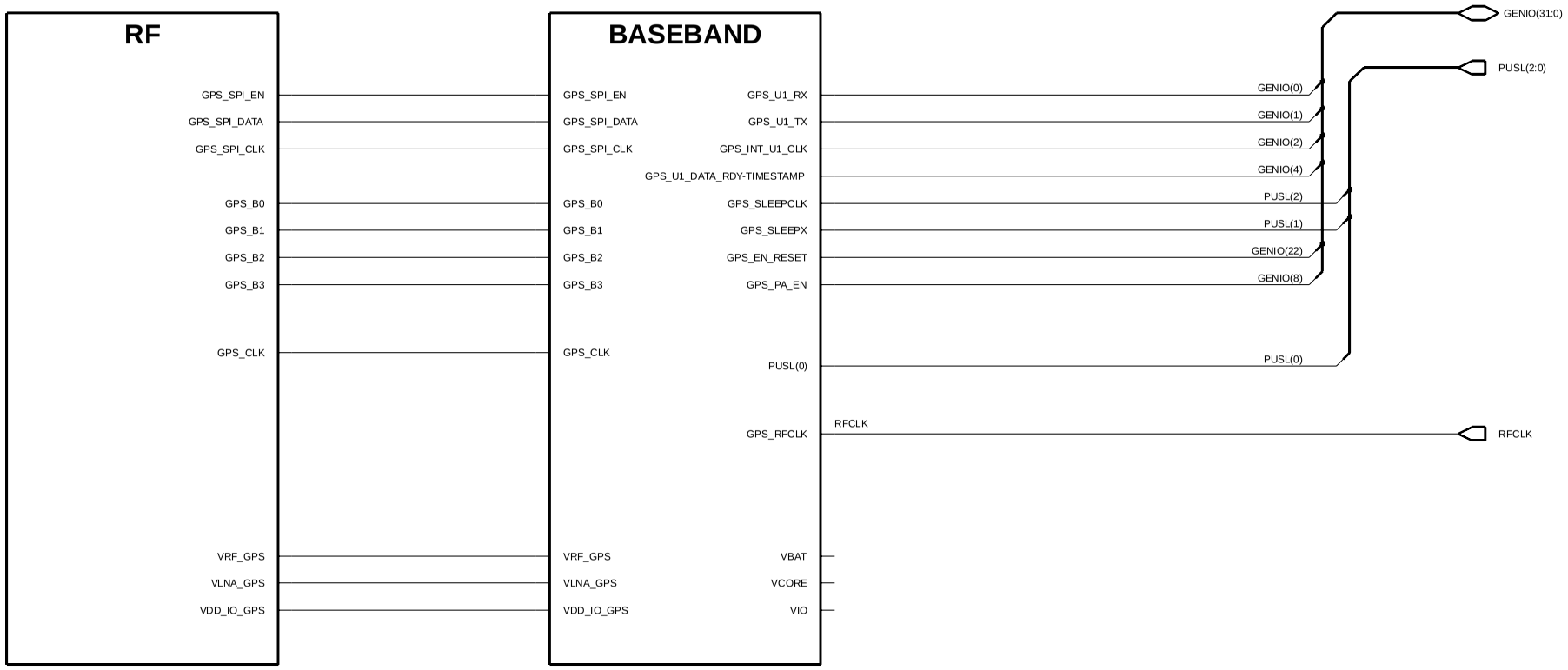

Circuit Diagram - UPP 8M

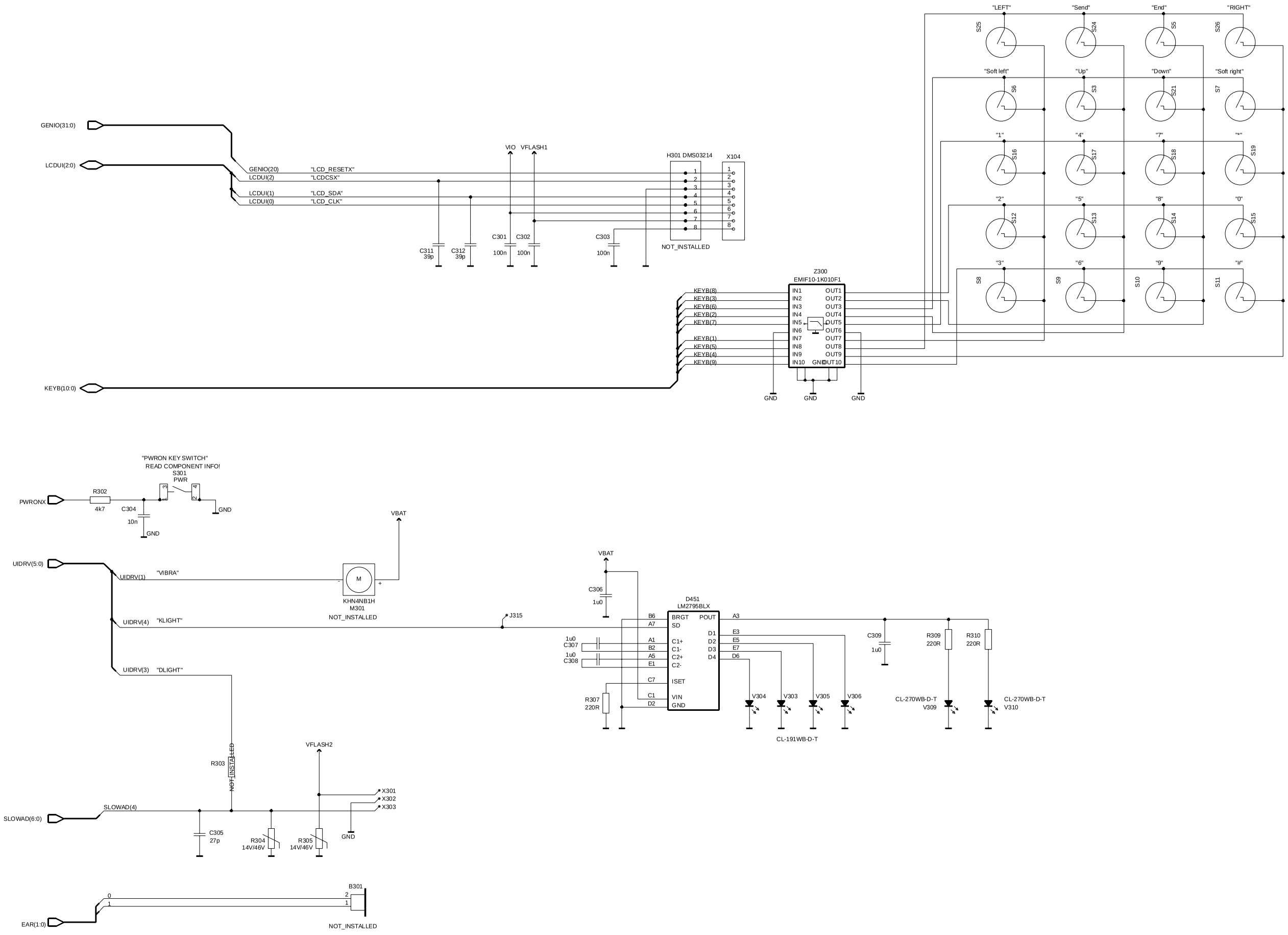

Circuit Diagram - User Interface

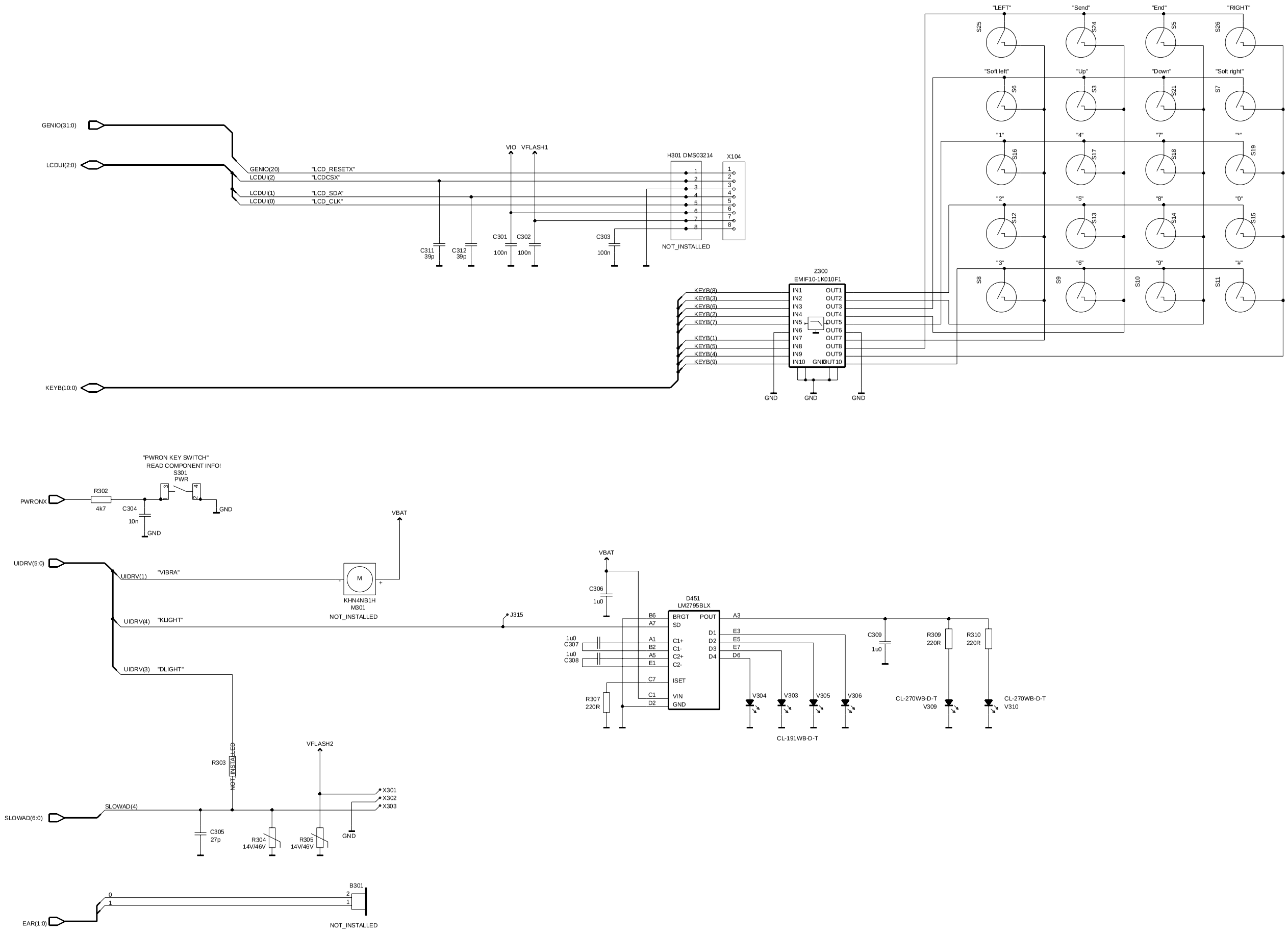

BB-RF Interface

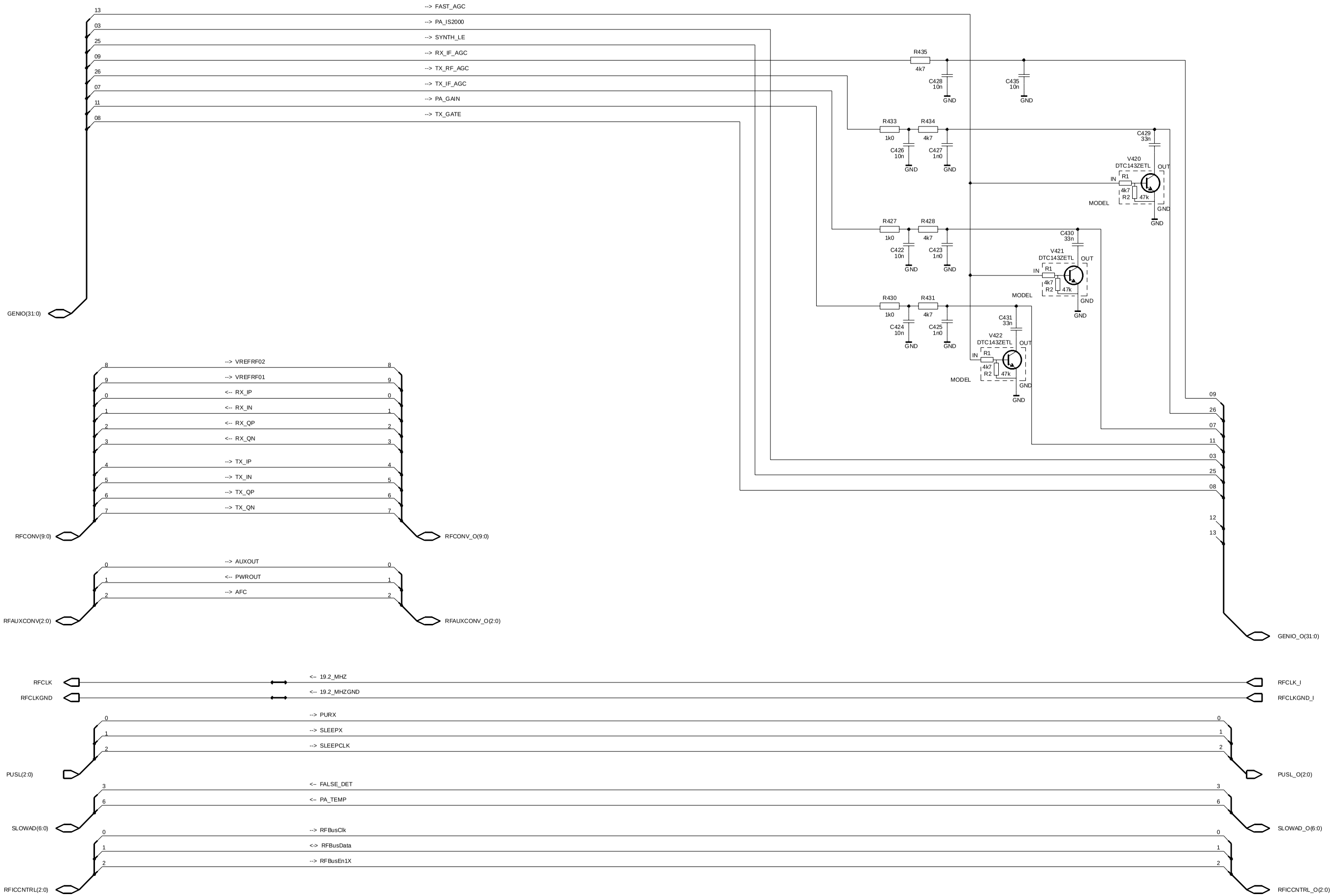

System Connector

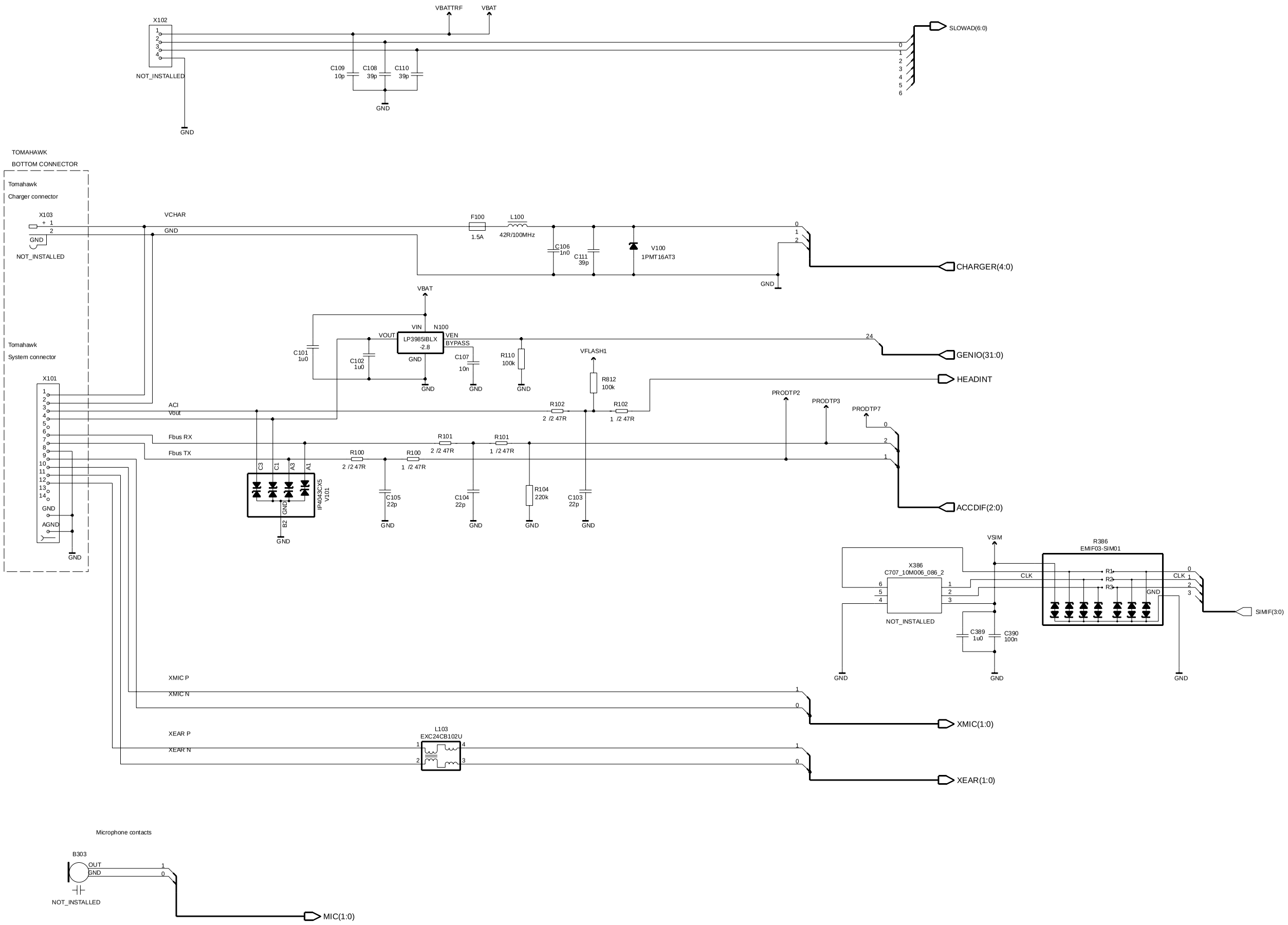

AMD 64 Mbit

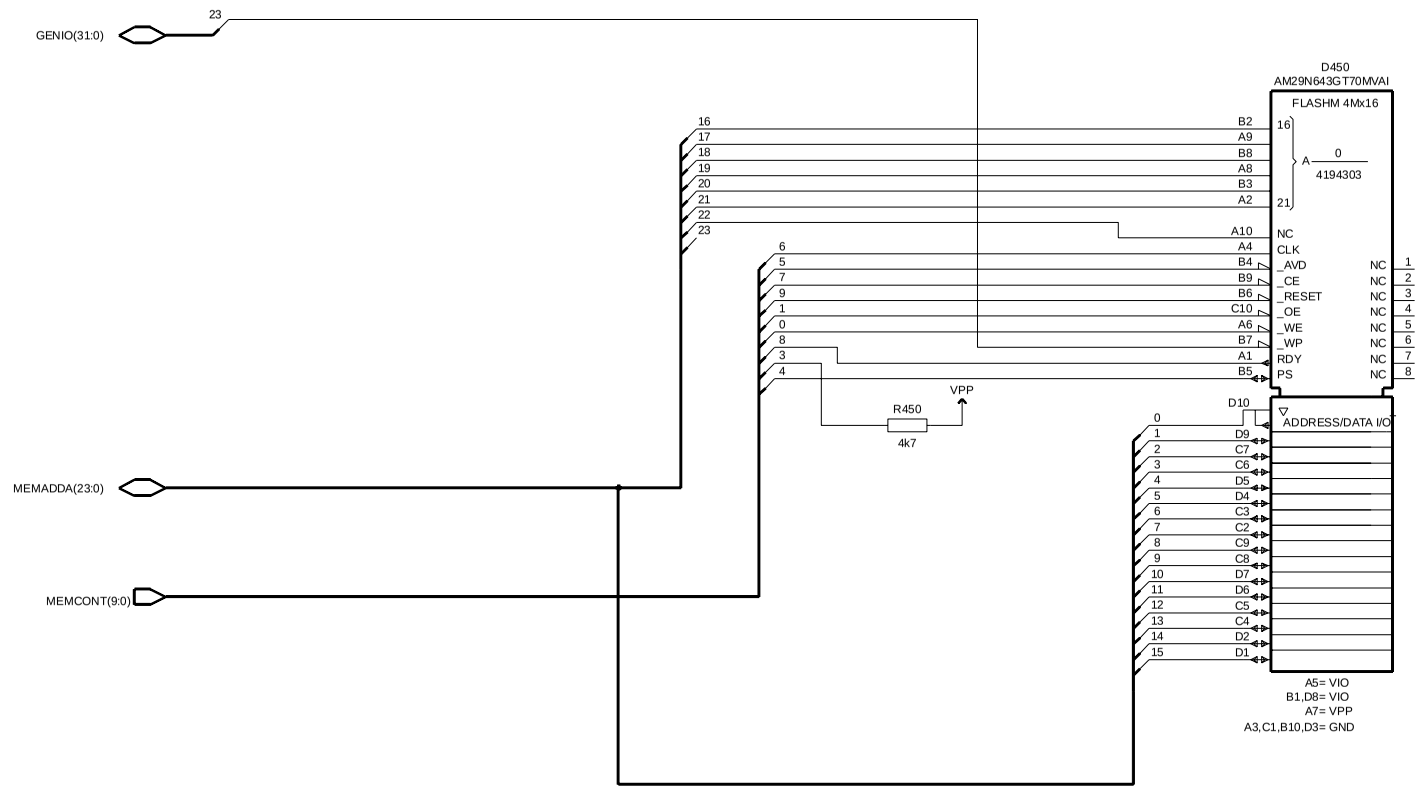
GENIO(31:0)
23
D450
AM29N643GT70MVAI
FLASHM 4Mx16
16
A
0
4194303
21
B2
A9
B8
A8
B3
A2
A10
A4
B4
B9
B6
C10
A6
B7
A1
B5
NC
CLK
_AVD
_CE
_RESET
_OE
_WE
_WP
RDY
PS
NC 1
NC 2
NC 3
NC 4
NC 5
NC 6
NC 7
NC 8
D10
ADDRESS/DATA I/O
D9
C7
C6
D5
D4
C3
C2
C9
C8
D7
D6
C5
C4
D2
D1
VPP
R450
4k7
MEMADDA(23:0)
MEMCONT(9:0)
A5= VIO
B1,D8= VIO
A7= VPP
A3,C1,B10,D3= GND

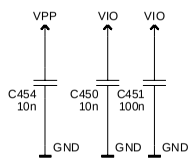
VPP
VIO
VIO
C454
10n
C450
10n
C451
100n
GND
GND
GND

DCT4 Common Baseband - Top Level

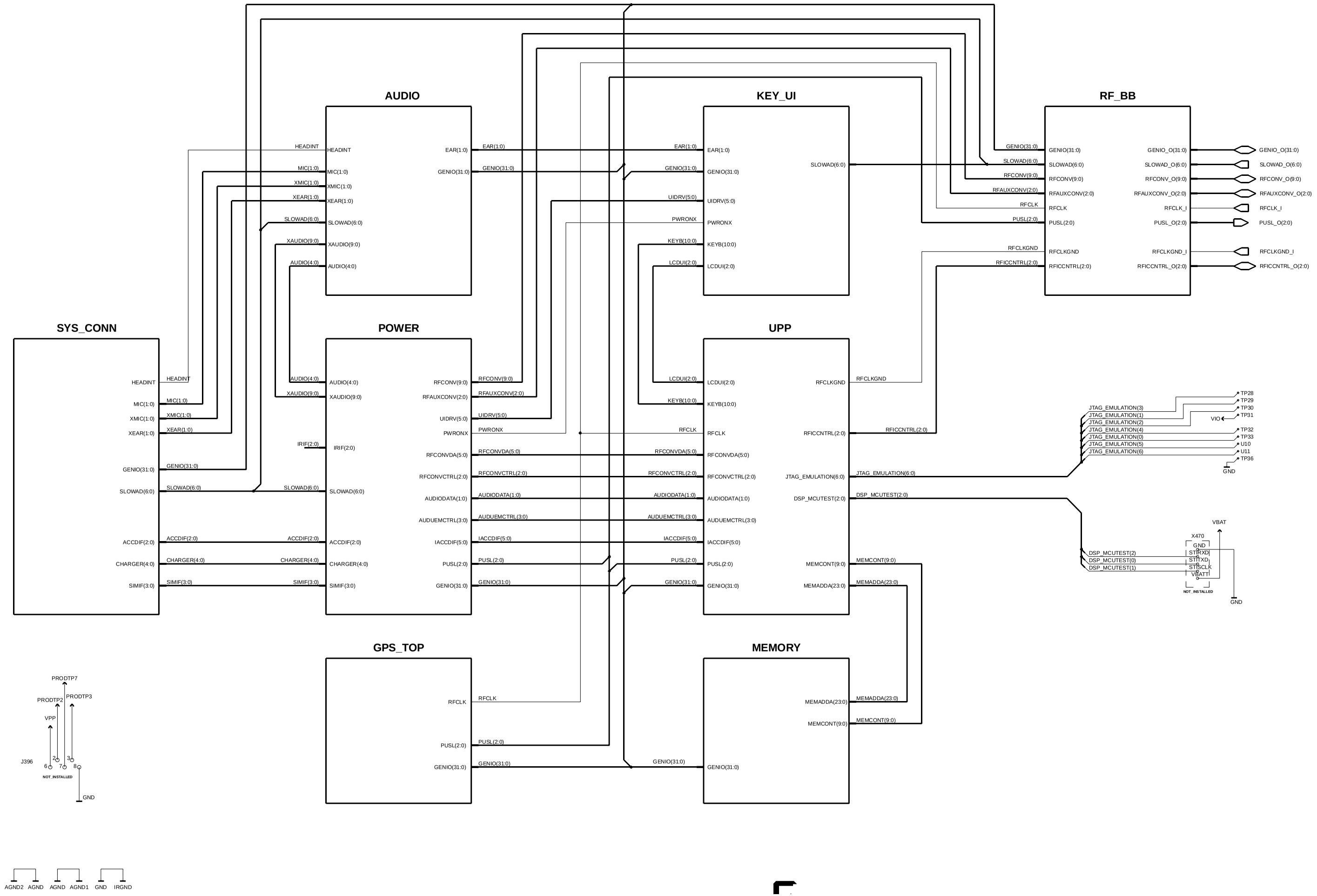

Circuit Diagram - Batman

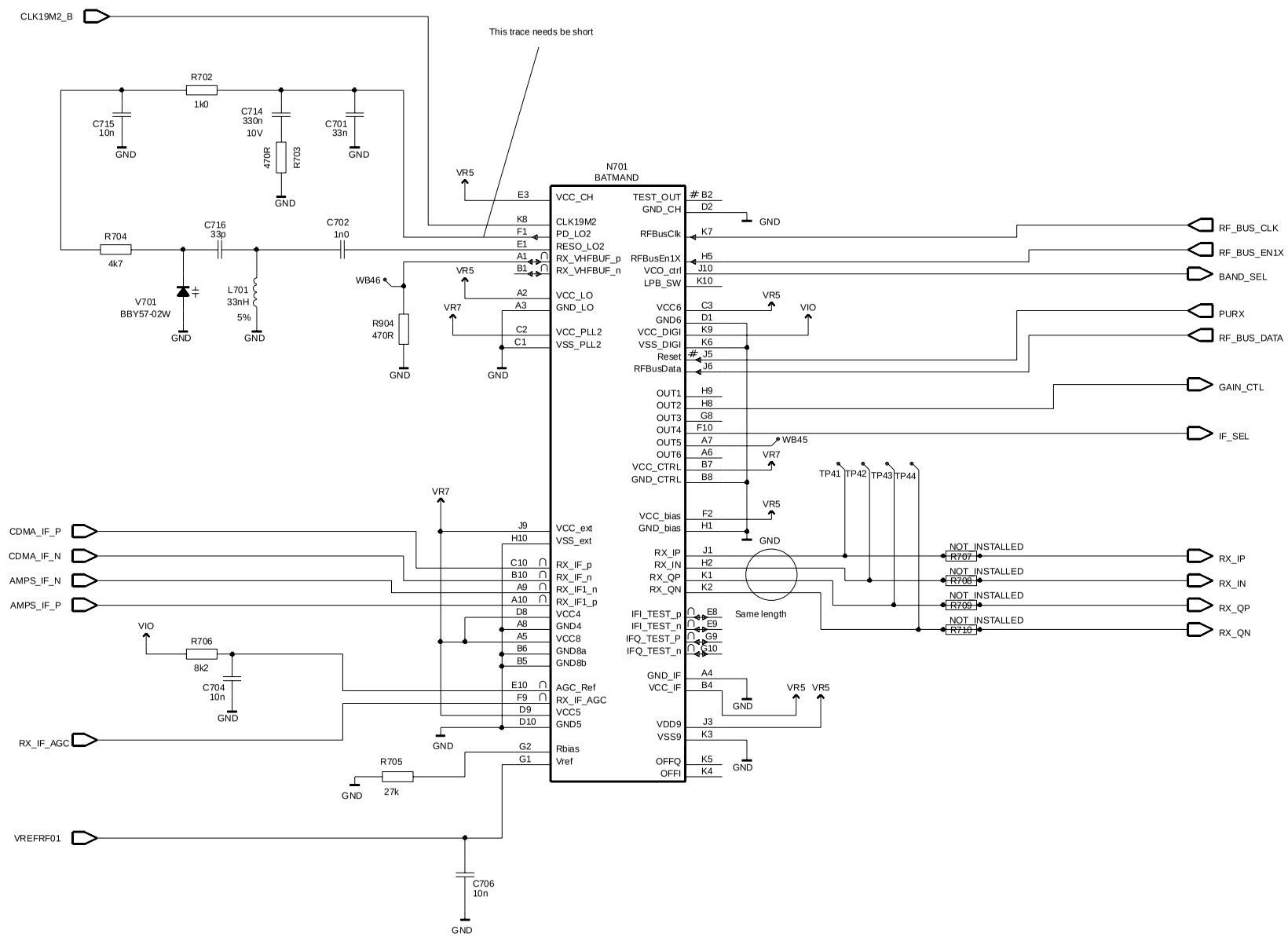

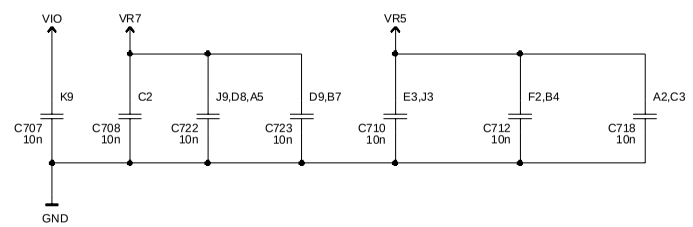

Circuit Diagram - UHF Synth

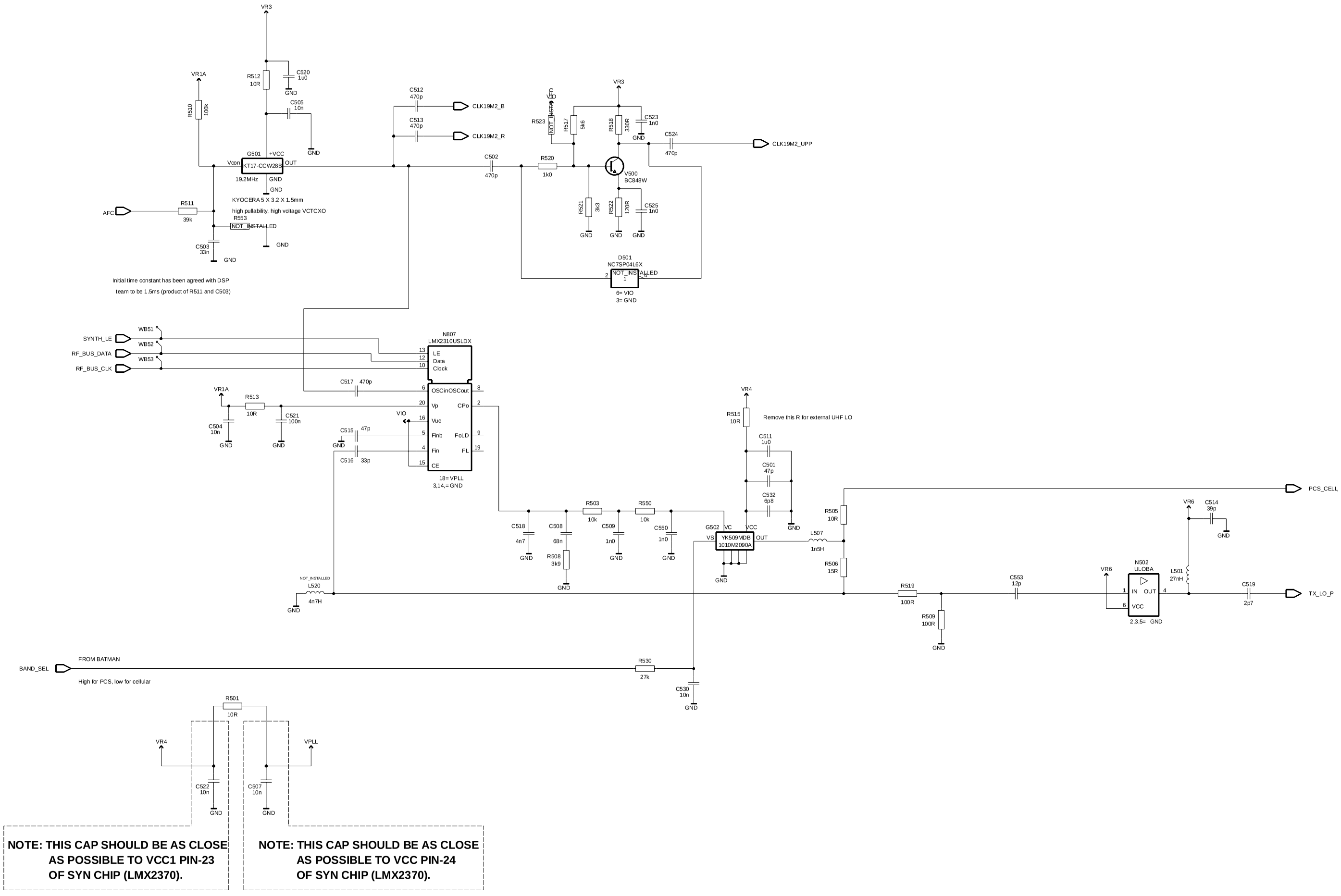

Circuit Diagram - Front End

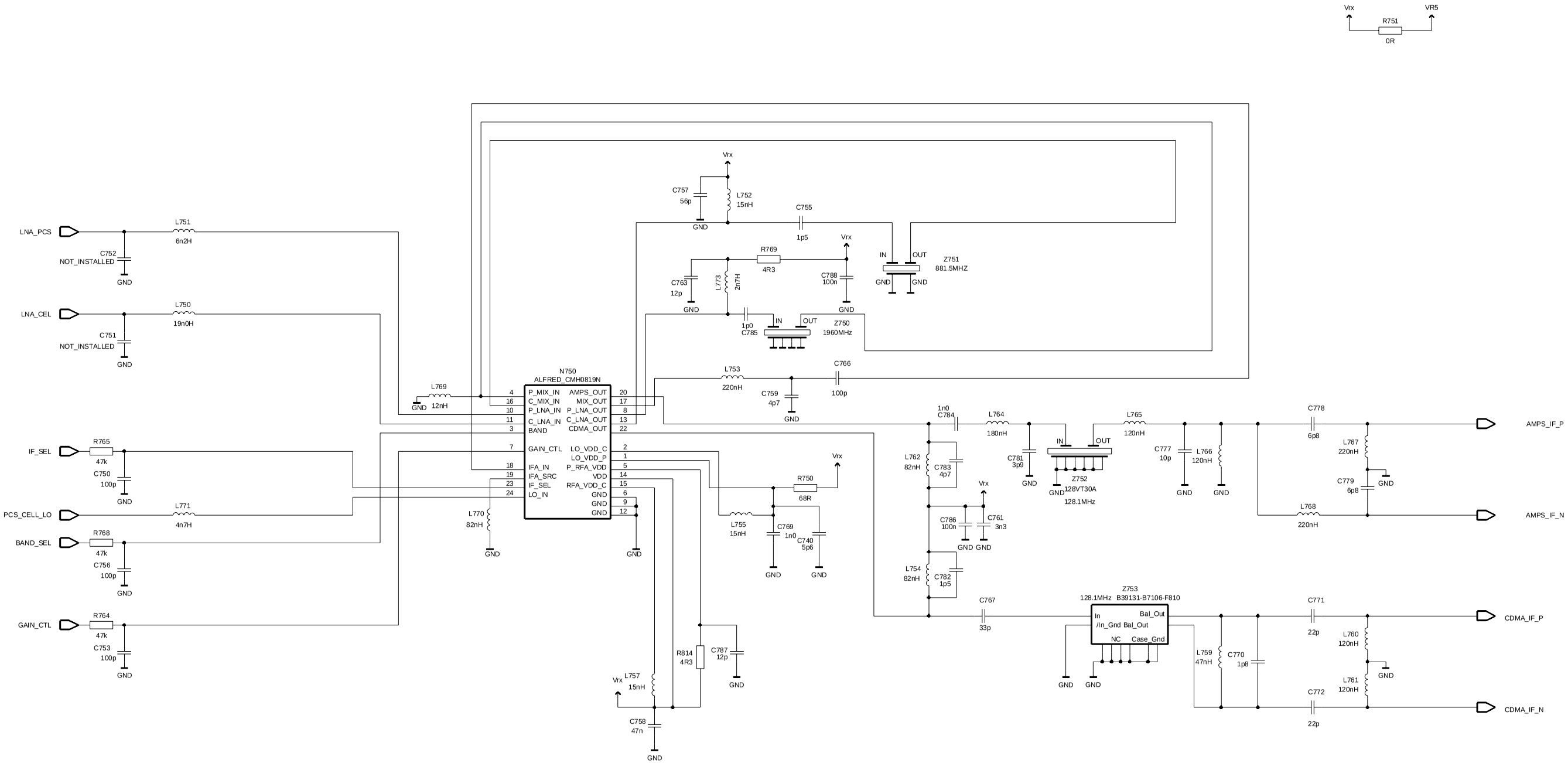

	LOGIC INPUTS		
MODES	BAND	GAIN_CTL	IF_SEL
CEL CDMA Hi Gain	0	1	0
CEL CDMA Lo Gain	0	0	0
PCS CDMA Hi Gain	1	1	0
PCS CDMA Lo Gain	1	0	0
AMPS Hi Gain	0	1	1
AMPS Lo Gain	0	0	1

Circuit Diagram - Robin

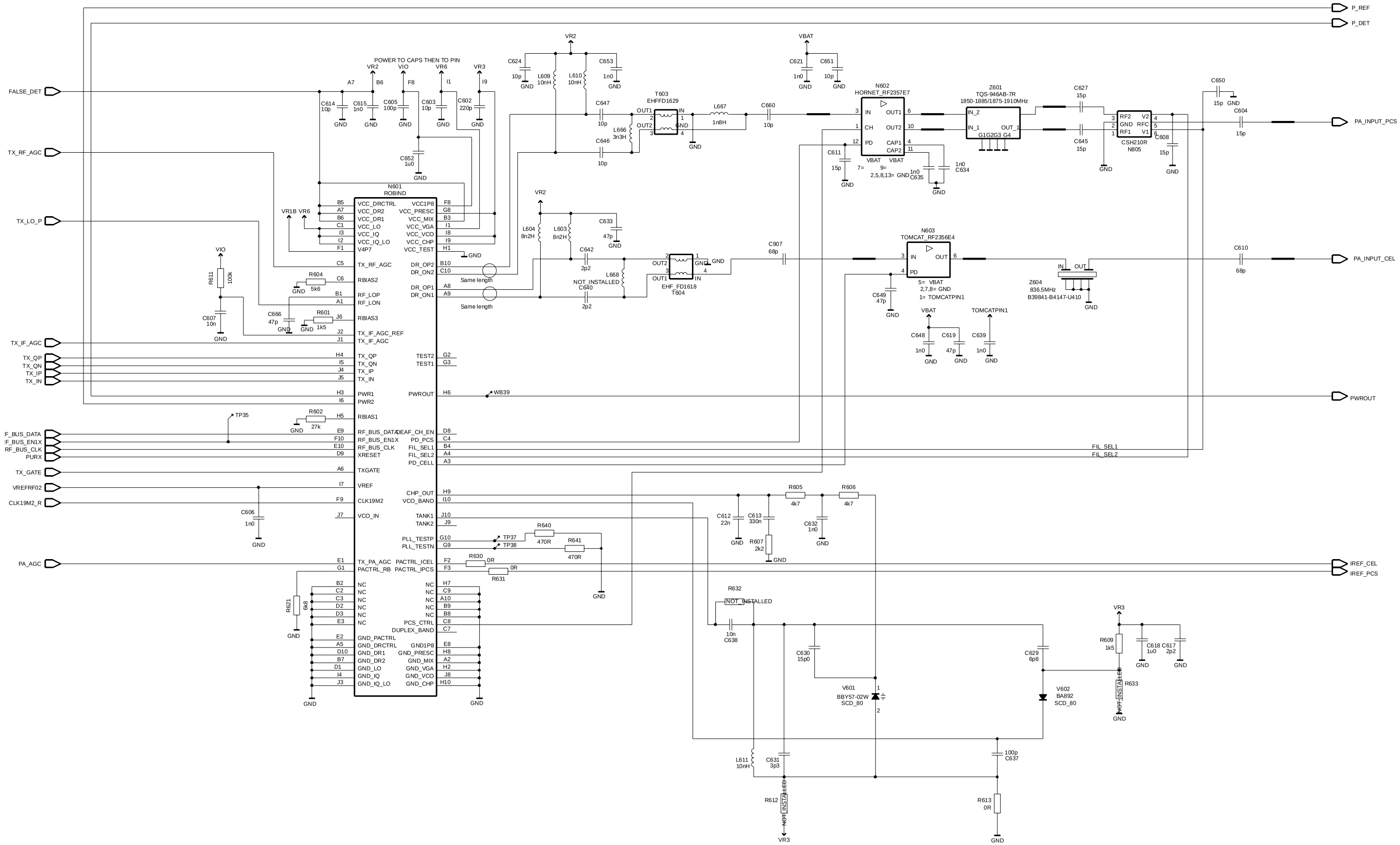

Circuit Diagram - PA

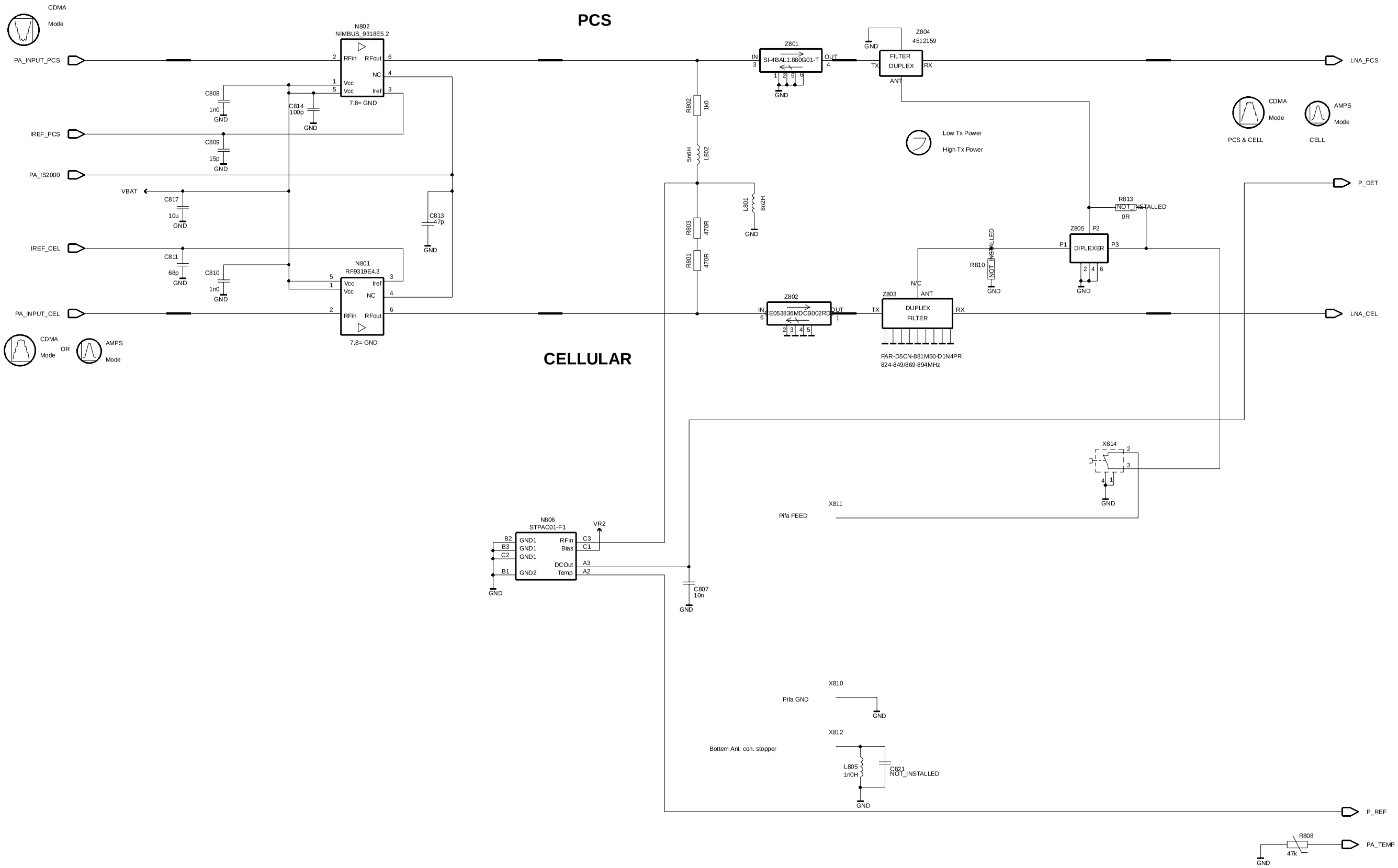

Circuit Diagram - Top Levell

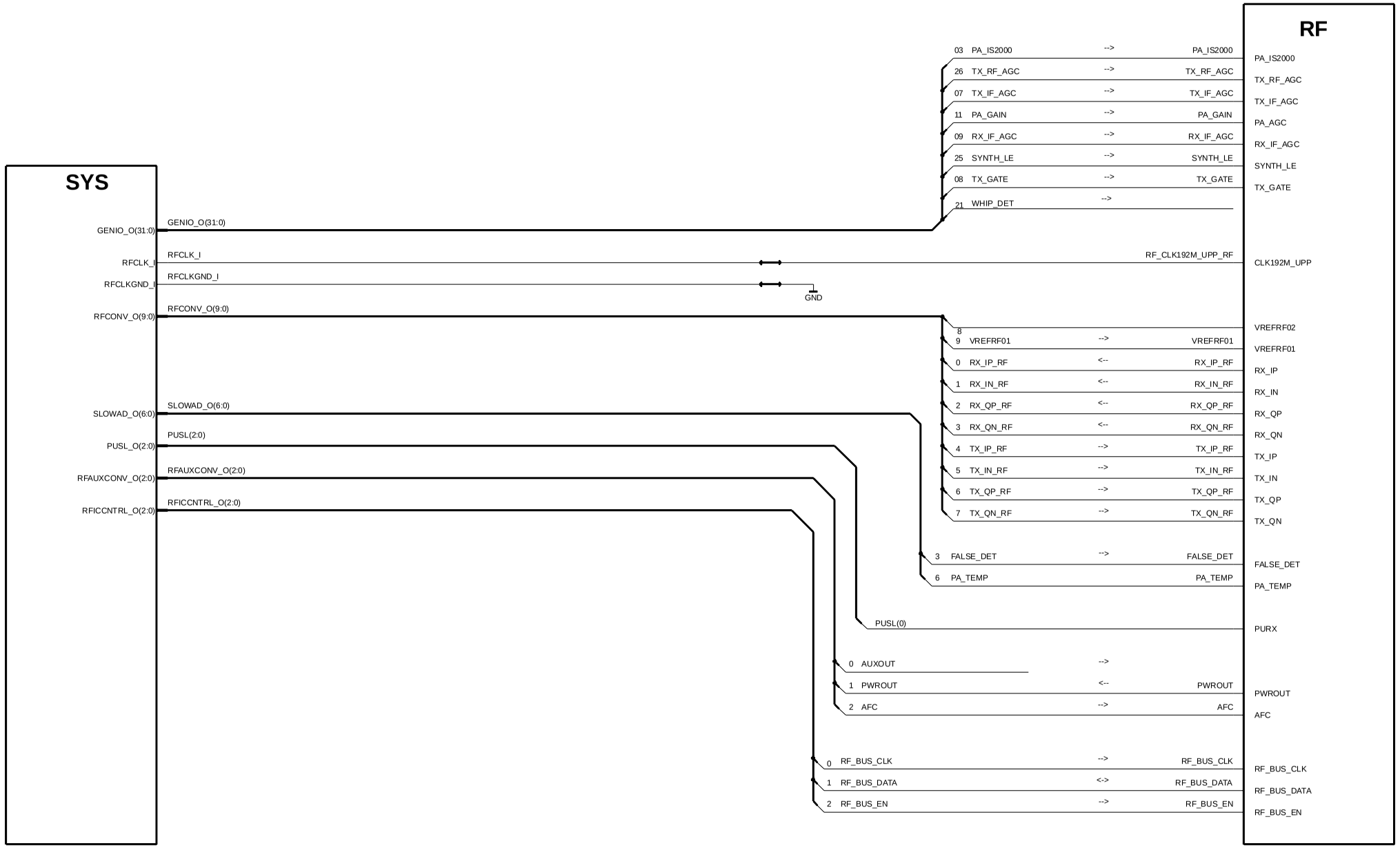

Shields

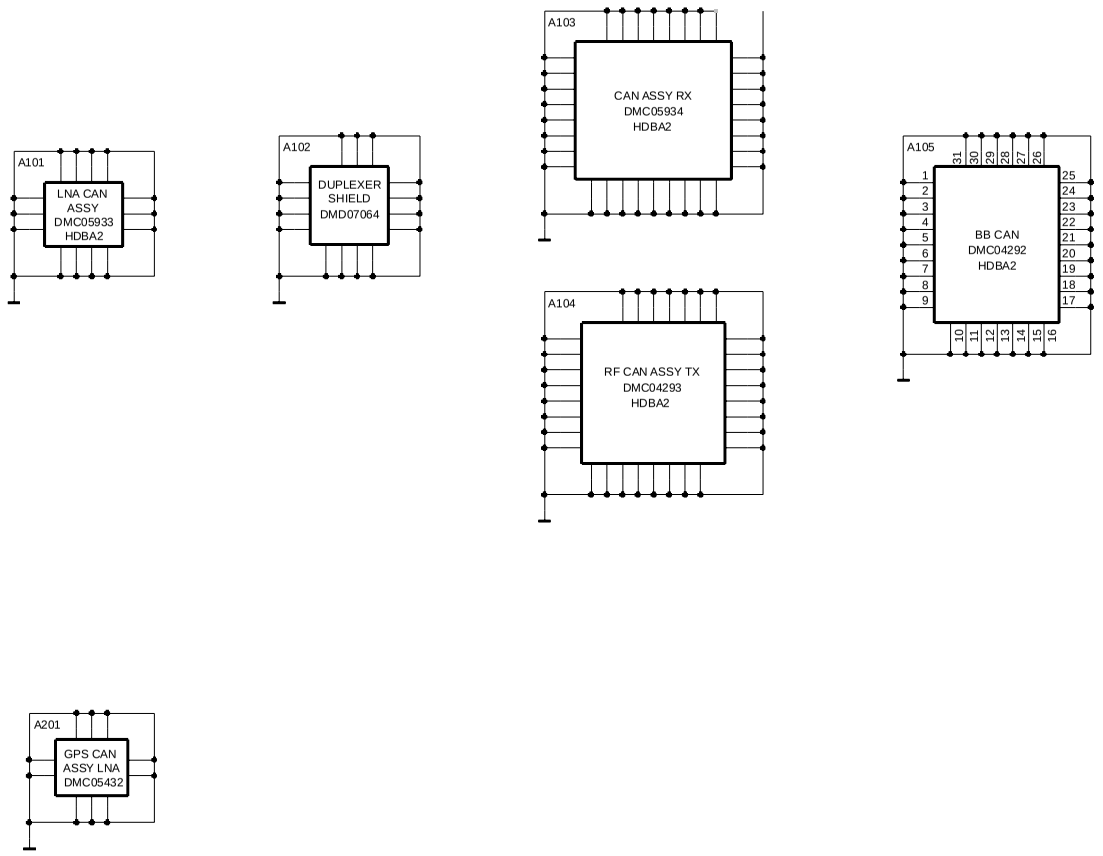
A101
LNA CAN
ASSY
DMC05933
HDBA2
A102
DUPLEXER
SHIELD
DMD07064
A103
CAN ASSY RX
DMC05934
HDBA2
A104
RF CAN ASSY TX
DMC04293
HDBA2
A105
BB CAN
DMC04292
HDBA2
A201
GPS CAN
ASSY LNA
DMC05432

Component Layout (3586i)- Top

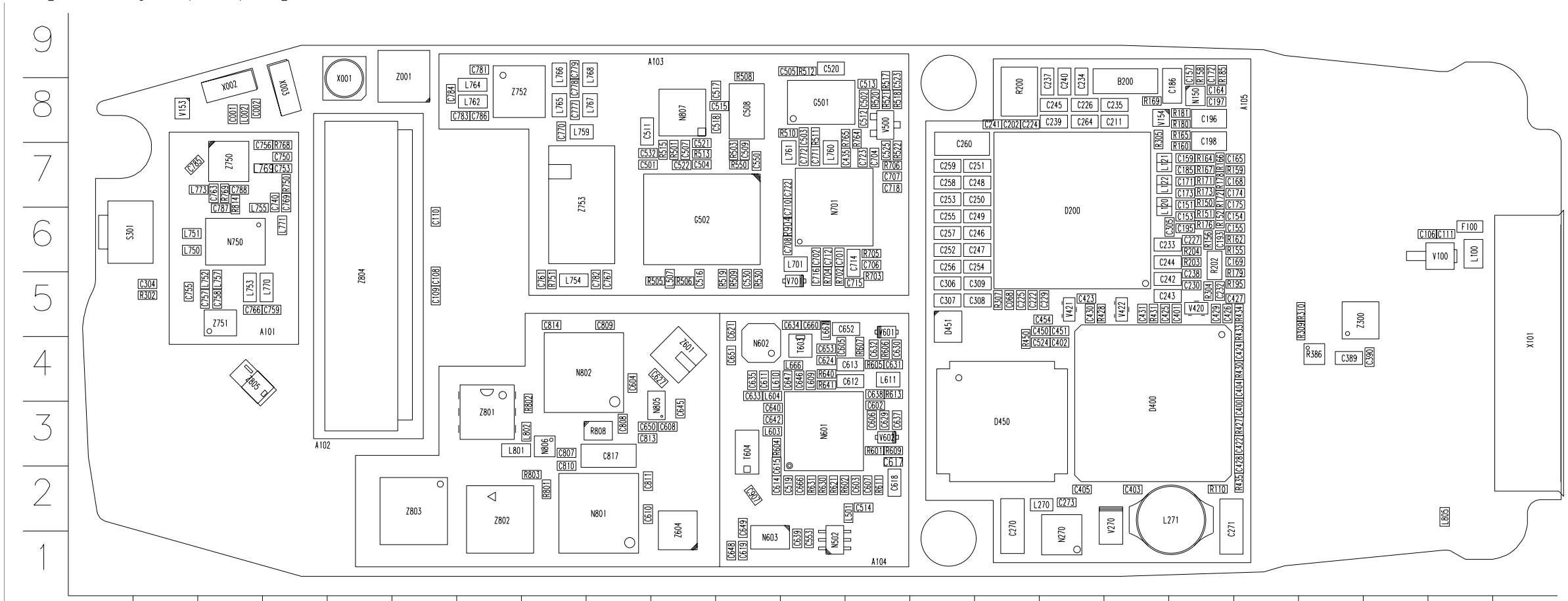
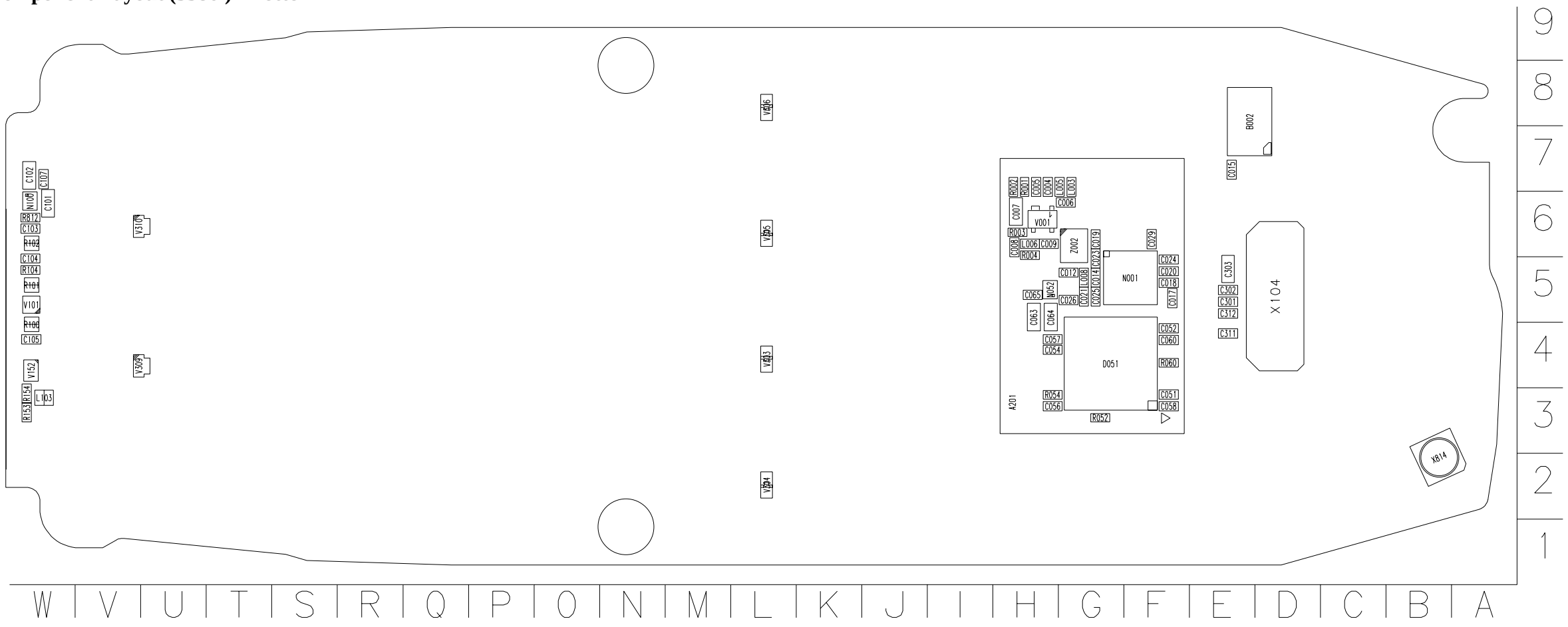
Component Layout (3586i) - Bottom