COMPAL CONFIDENTIAL

MODEL NAME : *NAL20*

PCB NO : *LA-5571P (DA80000FP00)*

BOM P/N : *43176531LXX*

M10 Margaux UMA

rPGA Auburndale +
FCBGA PCH IBEXPEAK-M

2010-01-21

REV : 1.0(A00)

@ : Nopop Component

MB Type	BOM P/N	TCM		TPM		BOM CONFIG
		W(3@)	W/O(4@)	W(5@)	W/O(6@)	
TPM EN,TCM DIS	43176531L01		*	*		4@,5@
ALL TPM DISABLE	43176531L02		*		*	4@,6@
TCM EN,TPM DIS	43176531L03	*			*	3@,6@

MB PCB

Part Number	Description
DA80000FP00	PCB 0AF LA-5571P REV0 M/B UMA

PROPRIETARY NOTE: THIS SHEET OF ENGINEERING DRAWING AND SPECIFICATIONS CONTAINS CONFIDENTIAL TRADE SECRET AND OTHER PROPRIETARY INFORMATION OF DELL INC. ("DELL") THIS DOCUMENT MAY NOT BE TRANSFERRED OR COPIED WITHOUT THE EXPRESS WRITTEN AUTHORIZATION OF DELL. IN ADDITION, NEITHER THIS SHEET NOR THE INFORMATION IT CONTAINS WAY BE USED BY OR DISCLOSED TO ANY THIRD PARTY WITHOUT DELL'S EXPRESS WRITTEN CONSENT.

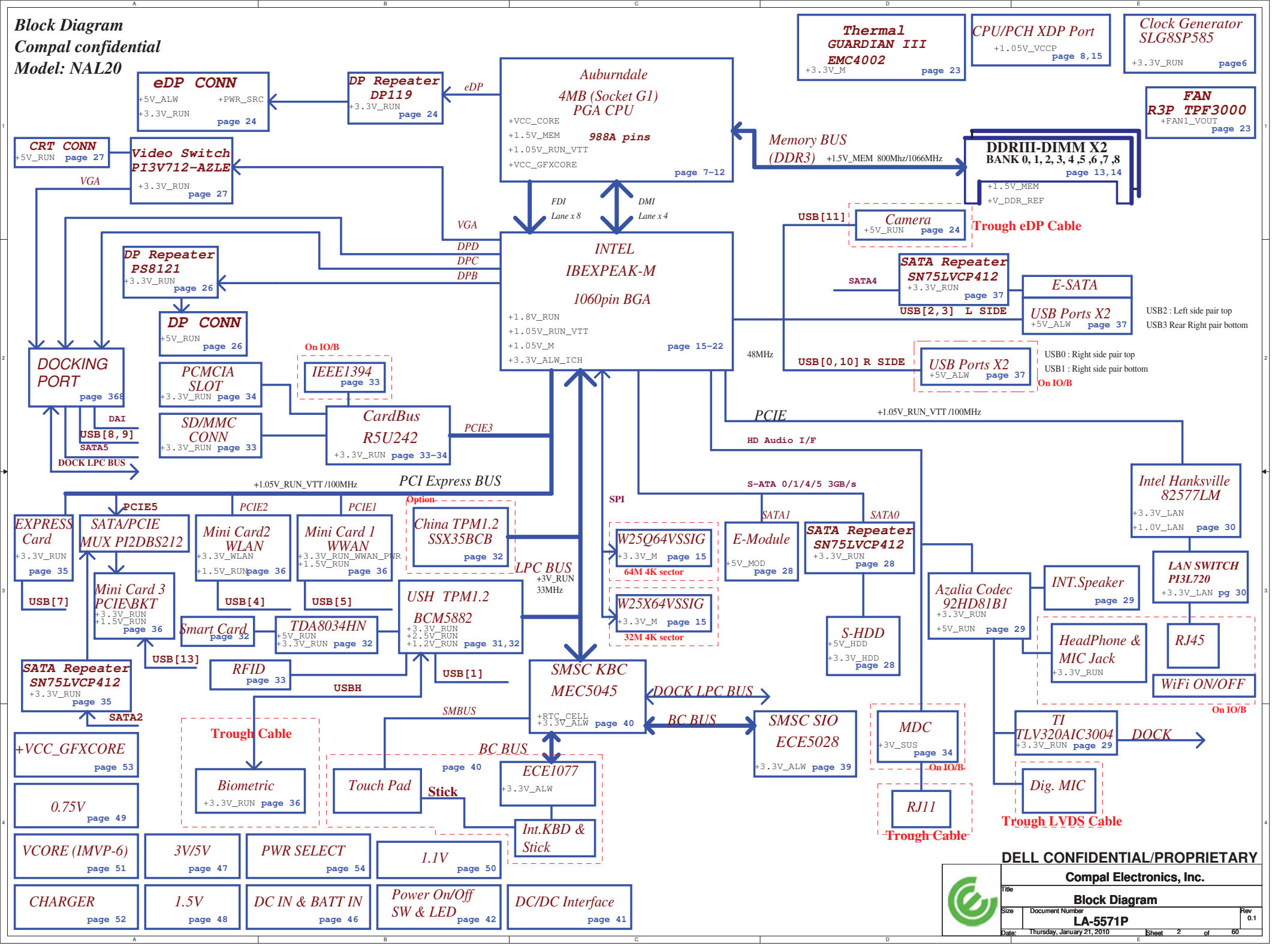
Block Diagram
Compal confidential
Model: NAL20
Thermal GUARDIAN III EMC4002 +3.3V_M page 23
CPU/PCH XDP Port +1.05V_VCCP page 8,15
Clock Generator SLG8SP585 +3.3V_RUN page6
eDP CONN +5V_ALW +PWR_SRC +3.3V_RUN page 24
DP Repeater DP119 +3.3V_RUN page 24
eDP
Auburndale 4MB (Socket G1) PGA CPU
+VCC_CORE
+1.5V_MEM
988A pins
+1.05V_RUN_VTT
+VCC_GFXCORE
page 7-12
FAN R3P TPF3000 +FAN1_VOUT page 23
Memory BUS (DDR3) +1.5V_MEM 800Mhz/1066MHz
DDRIII-DIMM X2
BANK 0, 1, 2, 3, 4 ,5 ,6 ,7 ,8
page 13,14
+1.5V_MEM
+V_DDR_REF
CRT CONN +5V_RUN page 27
Video Switch PI3V712-AZLE +3.3V_RUN page 27
VGA
FDI Lane x 8
DMI Lane x 4
USB[11]
Camera +5V_RUN page 24
Trough eDP Cable
DP Repeater PS8121 +3.3V_RUN page 26
DPD
DPC
DPB
INTEL IBEXPEAK-M 1060pin BGA
+1.8V_RUN
+1.05V_RUN_VTT
+1.05V_M
+3.3V_ALW_ICH
page 15-22
SATA Repeater SN75LVCP412 +3.3V_RUN page 37
SATA4
E-SATA
USB[2,3] L SIDE
USB Ports X2 +5V_ALW page 37
USB2 : Left side pair top
USB3 Rear Right pair bottom
DP CONN +5V_RUN page 26
48MHz
USB[0,10] R SIDE
USB Ports X2 +5V_ALW page 37
USB0 : Right side pair top
USB1 : Right side pair bottom
On IO/B
DOCKING PORT page 368
On IO/B
IEEE1394 page 33
PCMCIA SLOT +3.3V_RUN page 34
SD/MMC CONN +3.3V_RUN page 33
CardBus R5U242 +3.3V_RUN page 33-34
PCIE3
DAI
USB[8,9]
SATA5
DOCK LPC BUS
PCIE
+1.05V_RUN_VTT /100MHz
HD Audio I/F
+1.05V_RUN_VTT /100MHz
PCI Express BUS
S-ATA 0/1/4/5 3GB/s
Intel Hanksville 82577LM +3.3V_LAN +1.0V_LAN page 30
PCIE5
PCIE2
PCIE1
Option
SPI
SATA1
SATA0
EXPRESS Card +3.3V_RUN page 35
SATA/PCIE MUX PI2DBS212
Mini Card2 WLAN +3.3V_WLAN +1.5V_RUN page 36
Mini Card 1 WWAN +3.3V_RUN_WWAN_PWR +1.5V_RUN page 36
China TPM1.2 SSX35BCB page 32
W25Q64VSSIG +3.3V_M page 15 64M 4K sector
E-Module +5V_MOD page 28
SATA Repeater SN75LVCP412 +3.3V_RUN page 28
LPC BUS +3V_RUN 33MHz
Azalia Codec 92HD81B1 +3.3V_RUN +5V_RUN page 29
INT.Speaker page 29
LAN SWITCH PI3L720 +3.3V_LAN pg 30
USB[7]
Mini Card 3 PCIE\BKT +3.3V_RUN +1.5V_RUN page 36
USB[4]
USB[5]
USH TPM1.2 BCM5882 +3.3V_RUN +2.5V_RUN +1.2V_RUN page 31,32
W25X64VSSIG +3.3V_M page 15 32M 4K sector
S-HDD +5V_HDD +3.3V_HDD page 28
HeadPhone & MIC Jack +3.3V_RUN
RJ45
Smart Card page 32
TDA8034HN +5V_RUN +3.3V_RUN page 32
USB[13]
SATA Repeater SN75LVCP412 +3.3V_RUN page 35
RFID page 33
USBH
USB[1]
SMSC KBC MEC5045 +RTC_CELL +3.3V_ALW page 40
DOCK LPC BUS
WiFi ON/OFF
On IO/B
SATA2
SMBUS
BC BUS
SMSC SIO ECE5028 +3.3V_ALW page 39
MDC +3V_SUS page 34
On IO/B
TI TLV320AIC3004 +3.3V_RUN page 29
DOCK
+VCC_GFXCORE page 53
Trough Cable
Biometric +3.3V_RUN page 36
Touch Pad
Stick
page 40
ECE1077 +3.3V_ALW
Int.KBD & Stick
RJ11
Trough Cable
Dig. MIC
Trough LVDS Cable
0.75V page 49
VCORE (IMVP-6) page 51
3V/5V page 47
PWR SELECT page 54
1.1V page 50
CHARGER page 52
1.5V page 48
DC IN & BATT IN page 46
Power On/Off SW & LED page 42
DC/DC Interface page 41
DELL CONFIDENTIAL/PROPRIETARY
Compal Electronics, Inc.
Title
Block Diagram
Size
Document Number
LA-5571P
Rev 0.1
Date: Thursday, January 21, 2010
Sheet 2 of 60

POWER STATES

State \ Signal	SLP S3#	SLP S4#	SLP S5#	S4 STATE#	SLP M#	ALWAYS PLANE	M PLANE	SUS PLANE	RUN PLANE	CLOCKS
S0 (Full ON) / M0	HIGH	HIGH	HIGH	HIGH	HIGH	ON	ON	ON	ON	ON
S3 (Suspend to RAM) / M1	LOW	HIGH	HIGH	HIGH	HIGH	ON	ON	ON	OFF	OFF
S4 (Suspend to DISK) / M1	LOW	LOW	HIGH	LOW	HIGH	ON	ON	OFF	OFF	OFF
S5 (SOFT OFF) / M1	LOW	LOW	LOW	LOW	HIGH	ON	ON	OFF	OFF	OFF
S3 (Suspend to RAM) / M-OFF	LOW	HIGH	HIGH	HIGH	LOW	ON	OFF	ON	OFF	OFF
S4 (Suspend to DISK) / M-OFF	LOW	LOW	HIGH	LOW	LOW	ON	OFF	OFF	OFF	OFF
S5 (SOFT OFF) / M-OFF	LOW	LOW	LOW	LOW	LOW	ON	OFF	OFF	OFF	OFF

PM TABLE

State \ power plane	+15V_ALW +5V_ALW +3.3V_ALW_PCH +3.3V_RTC_LDO	+3.3V_SUS +1.5V_MEM	+5V_RUN +3.3V_RUN +1.8V_RUN +1.5V_RUN +0.75V_DDR_VTT +VCC_CORE +1.05V_RUN_VTT +1.05V_RUN	+3.3V_M +1.05V_M	+3.3V_M +1.05V_M (M-OFF)
S0	ON	ON	ON	ON	ON
S3	ON	ON	OFF	ON	OFF
S5 S4/AC	ON	OFF	OFF	ON	OFF
S5 S4/AC don't exist	OFF	OFF	OFF	OFF	OFF

	USB PORT#	DESTINATION
PCH	0	JUSB1 (Ext Right Side Bottom)
	1	JUSB1 (Ext Right Side Top)
	2	JESA1 (Ext Left Side Top)
	3	JESA1 (Ext Left Side Bottom)
	4	WLAN
	5	WWAN
	6	Bluetooth
	7	USH->BIO
	8	DOCKING
	9	DOCKING
	10	Express card
	11	Camera
	12	NA
	13	WPAN/NVMHCI

PCI EXPRESS	DESTINATION
Lane 1	MINI CARD-1 WWAN
Lane 2	MINI CARD-2 WLAN
Lane 3	Card Bus
Lane 4	EXPRESS CARD
Lane 5	MINI CARD-3 PCIE/BKT
Lane 6	10/100/1G LAN
Lane 7	None
Lane 8	None

PROPRIETARY NOTE: THIS SHEET OF ENGINEERING DRAWING AND SPECIFICATIONS CONTAINS CONFIDENTIAL TRADE SECRET AND OTHER PROPRIETARY INFORMATION OF DELL INC. ("DELL") THIS DOCUMENT MAY NOT BE TRANSFERRED OR COPIED WITHOUT THE EXPRESS WRITTEN AUTHORIZATION OF DELL. IN ADDITION, NEITHER THIS SHEET NOR THE INFORMATION IT CONTAINS WAY BE USED BY OR DISCLOSED TO ANY THIRD PARTY WITHOUT DELL'S EXPRESS WRITTEN CONSENT.

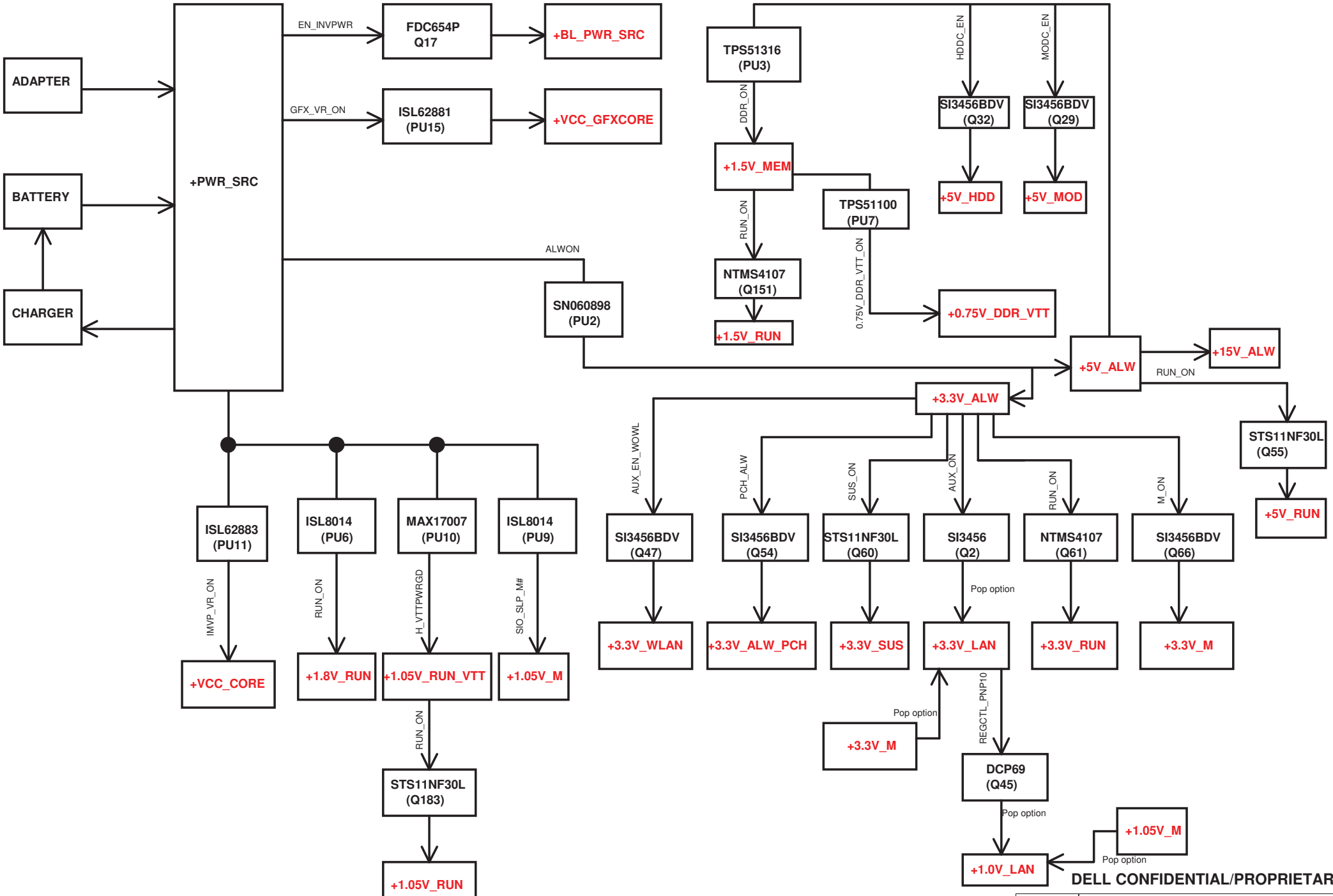

DELL CONFIDENTIAL/PROPRIETARY

PROPRIETARY NOTE: THIS SHEET OF ENGINEERING DRAWING AND SPECIFICATIONS CONTAINS CONFIDENTIAL TRADE SECRET AND OTHER PROPRIETARY INFORMATION OF DELL INC. ("DELL") THIS DOCUMENT MAY NOT BE TRANSFERRED OR COPIED WITHOUT THE EXPRESS WRITTEN AUTHORIZATION OF DELL. IN ADDITION, NEITHER THIS SHEET NOR THE INFORMATION IT CONTAINS WAY BE USED BY OR DISCLOSED TO ANY THIRD PARTY WITHOUT DELL'S EXPRESS WRITTEN CONSENT.

Compal Electronics, Inc.

Title: Power Rail

Size | Document Number: LA-5571P | Rev: 0.1

Date: Thursday, January 21, 2010 | Sheet 4 of 60

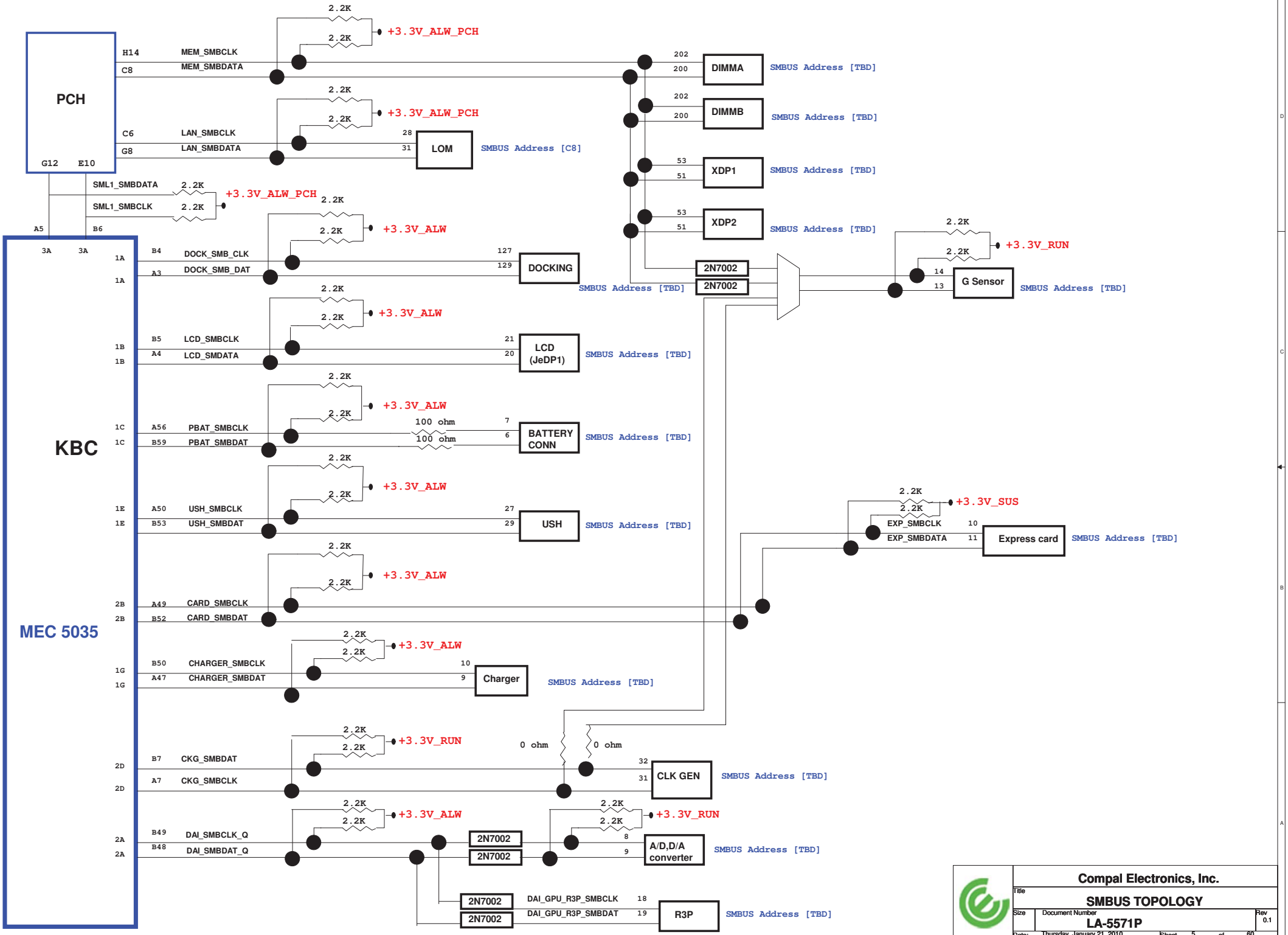

Compal Electronics, Inc.

Title: SMBUS TOPOLOGY

Size | Document Number: LA-5571P | Rev 0.1

Date: Thursday, January 21, 2010 | Sheet 5 of 60

+CLK_VDD_IO CAN BE RANGE FROM 1.05V TO 3V

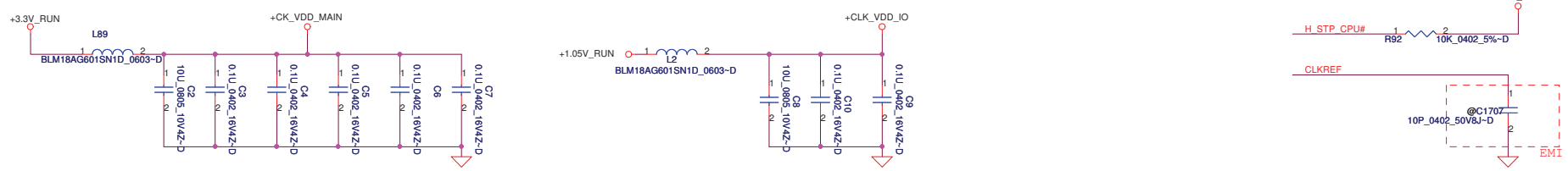

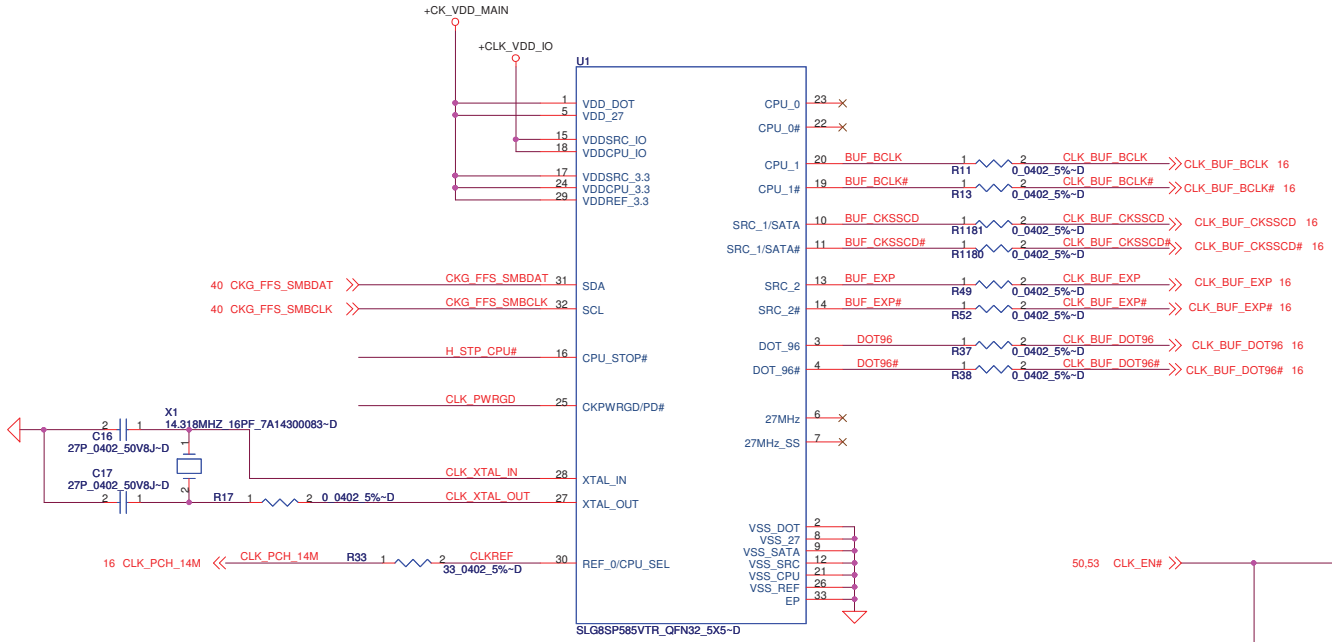

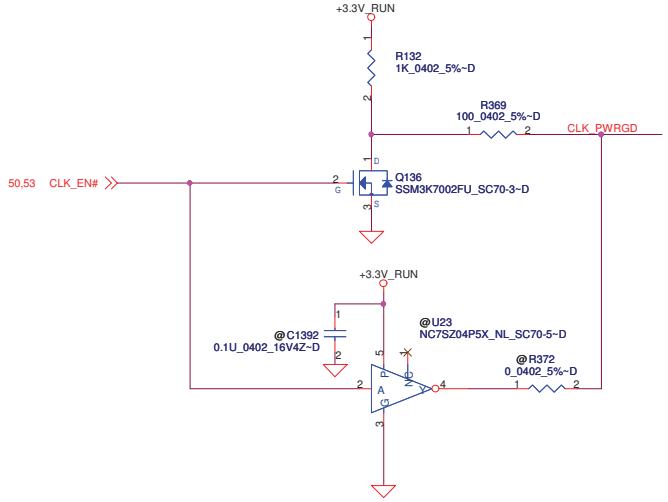

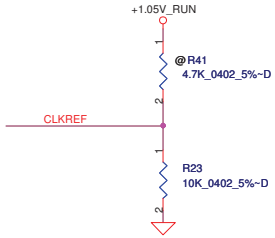

REF_O/CPU_SEL

PIN 30	CPU0	CPU1
1(0.7~1.5v)	100MHz	100MHz
0 (DEFULT)	133MHz	133MHz

PROPRIETARY NOTE: THIS SHEET OF ENGINEERING DRAWING AND SPECIFICATIONS CONTAINS CONFIDENTIAL TRADE SECRET AND OTHER PROPRIETARY INFORMATION OF DELL INC. ("DELL") THIS DOCUMENT MAY NOT BE TRANSFERRED OR COPIED WITHOUT THE EXPRESS WRITTEN AUTHORIZATION OF DELL. IN ADDITION, NEITHER THIS SHEET NOR THE INFORMATION IT CONTAINS WAY BE USED BY OR DISCLOSED TO ANY THIRD PARTY WITHOUT DELL'S EXPRESS WRITTEN CONSENT.

DELL CONFIDENTIAL/PROPRIETARY

Compal Electronics, Inc.

Title: Clock Generator

Size | Document Number: LA-5571P | Rev: 0.1

Date: Thursday, January 21, 2010 | Sheet 6 of 60

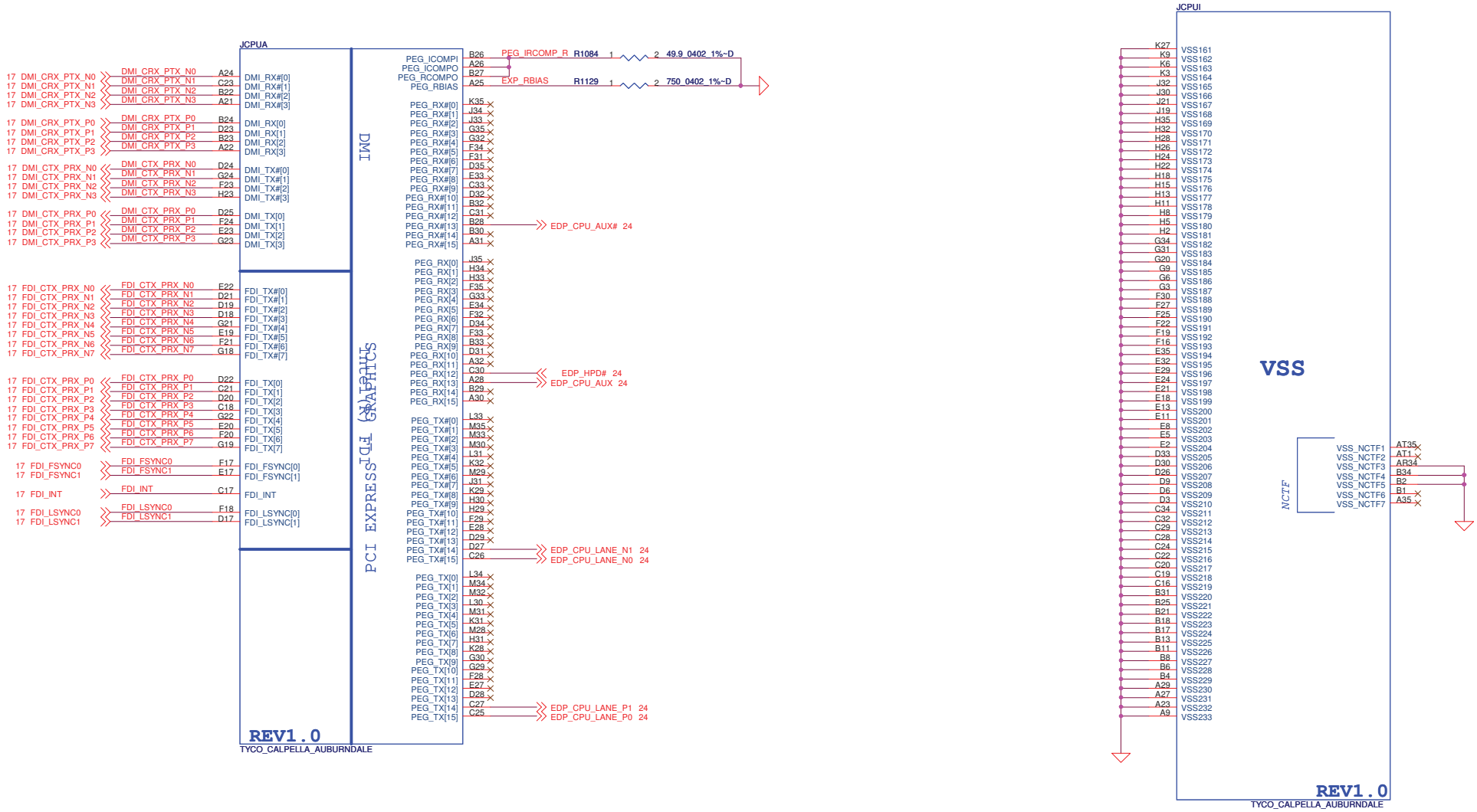

DELL CONFIDENTIAL/PROPRIETARY

PROPRIETARY NOTE: THIS SHEET OF ENGINEERING DRAWING AND SPECIFICATIONS CONTAINS CONFIDENTIAL TRADE SECRET AND OTHER PROPRIETARY INFORMATION OF DELL INC. ("DELL") THIS DOCUMENT MAY NOT BE TRANSFERRED OR COPIED WITHOUT THE EXPRESS WRITTEN AUTHORIZATION OF DELL. IN ADDITION, NEITHER THIS SHEET NOR THE INFORMATION IT CONTAINS WAY BE USED BY OR DISCLOSED TO ANY THIRD PARTY WITHOUT DELL'S EXPRESS WRITTEN CONSENT.

Compal Electronics, Inc.			
Title: Auburndale (1/6)			
Size	Document Number: LA-5571P		Rev 0.1
Date: Thursday, January 21, 2010	Sheet 7 of 60		

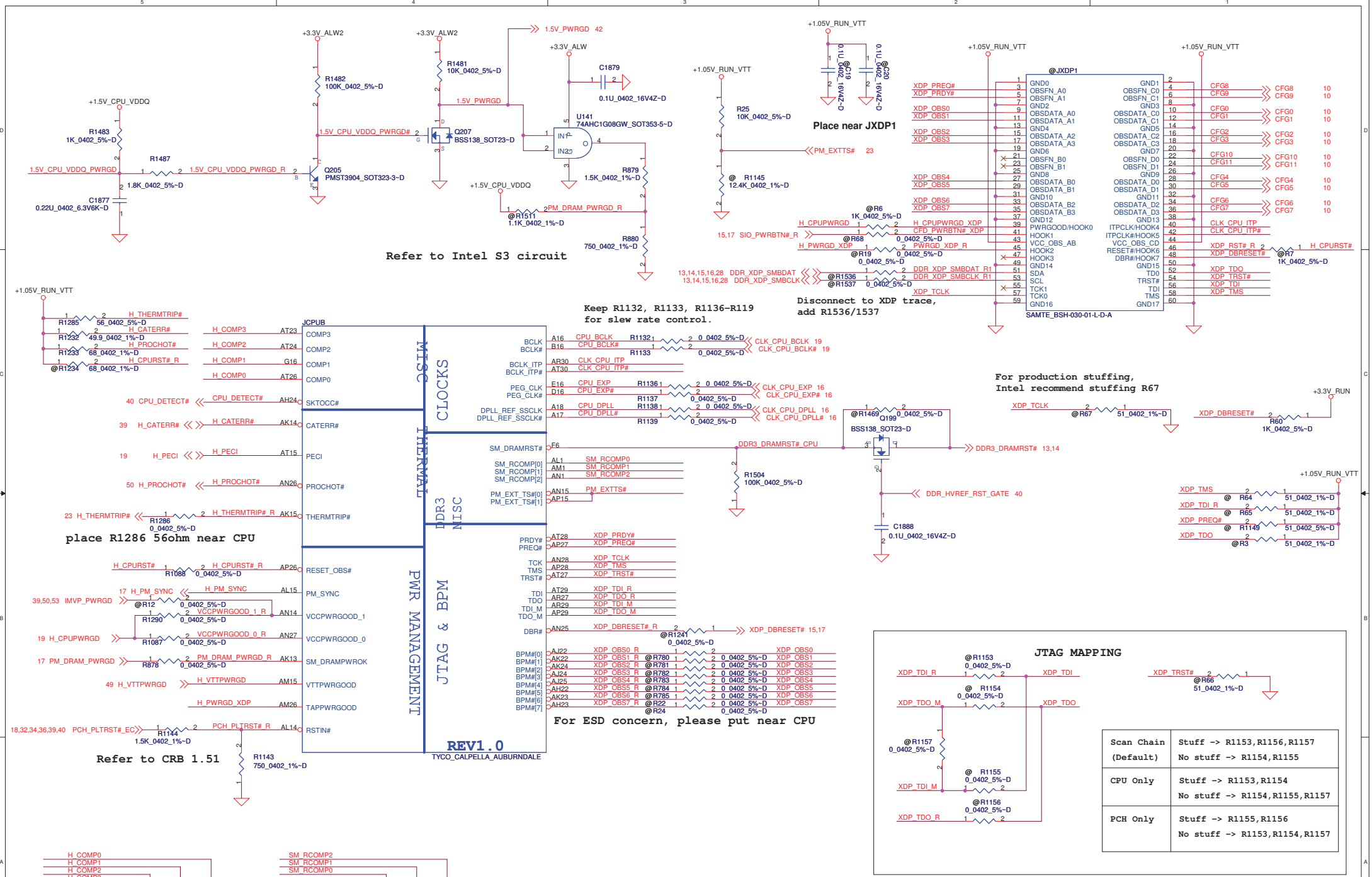

DELL CONFIDENTIAL/PROPRIETARY

PROPRIETARY NOTE: THIS SHEET OF ENGINEERING DRAWING AND SPECIFICATIONS CONTAINS CONFIDENTIAL TRADE SECRET AND OTHER PROPRIETARY INFORMATION OF DELL INC. ("DELL") THIS DOCUMENT MAY NOT BE TRANSFERRED OR COPIED WITHOUT THE EXPRESS WRITTEN AUTHORIZATION OF DELL. IN ADDITION, NEITHER THIS SHEET NOR THE INFORMATION IT CONTAINS WAY BE USED BY OR DISCLOSED TO ANY THIRD PARTY WITHOUT DELL'S EXPRESS WRITTEN CONSENT.

Compal Electronics, Inc.	
Title	Auburndale (2/6)
Size	Document Number: LA-5571P
Rev	0.1
Date: Thursday, January 21, 2010	Sheet 8 of 60

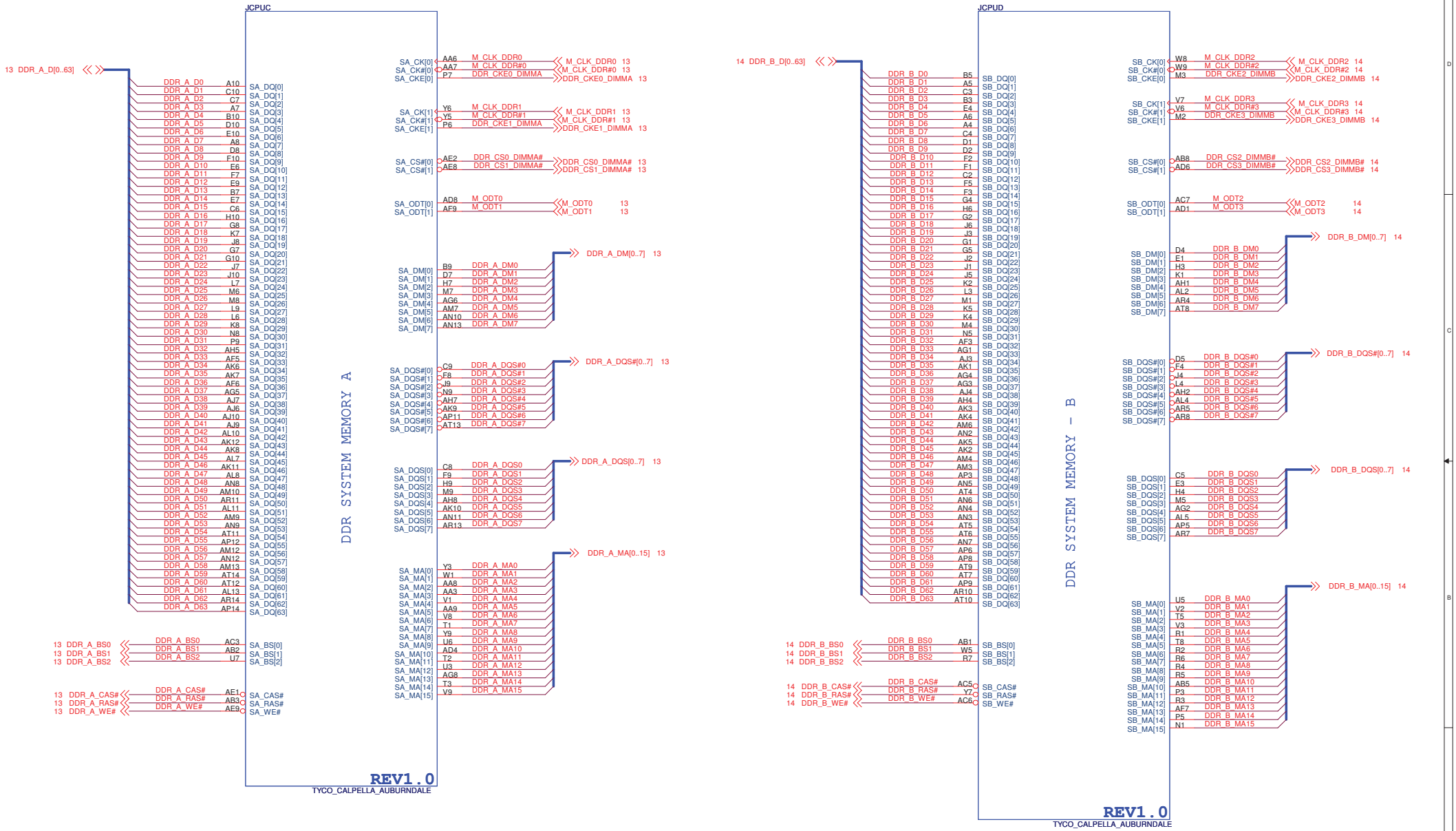

PROPRIETARY NOTE: THIS SHEET OF ENGINEERING DRAWING AND SPECIFICATIONS CONTAINS CONFIDENTIAL TRADE SECRET AND OTHER PROPRIETARY INFORMATION OF DELL INC. ("DELL") THIS DOCUMENT MAY NOT BE TRANSFERRED OR COPIED WITHOUT THE EXPRESS WRITTEN AUTHORIZATION OF DELL. IN ADDITION, NEITHER THIS SHEET NOR THE INFORMATION IT CONTAINS WAY BE USED BY OR DISCLOSED TO ANY THIRD PARTY WITHOUT DELL'S EXPRESS WRITTEN CONSENT.

DELL CONFIDENTIAL/PROPRIETARY

Compal Electronics, Inc.	
Title	Auburndale (3/6)
Size	Document Number: LA-5571P
Rev	0.1
Date: Thursday, January 21, 2010	Sheet 9 of 60

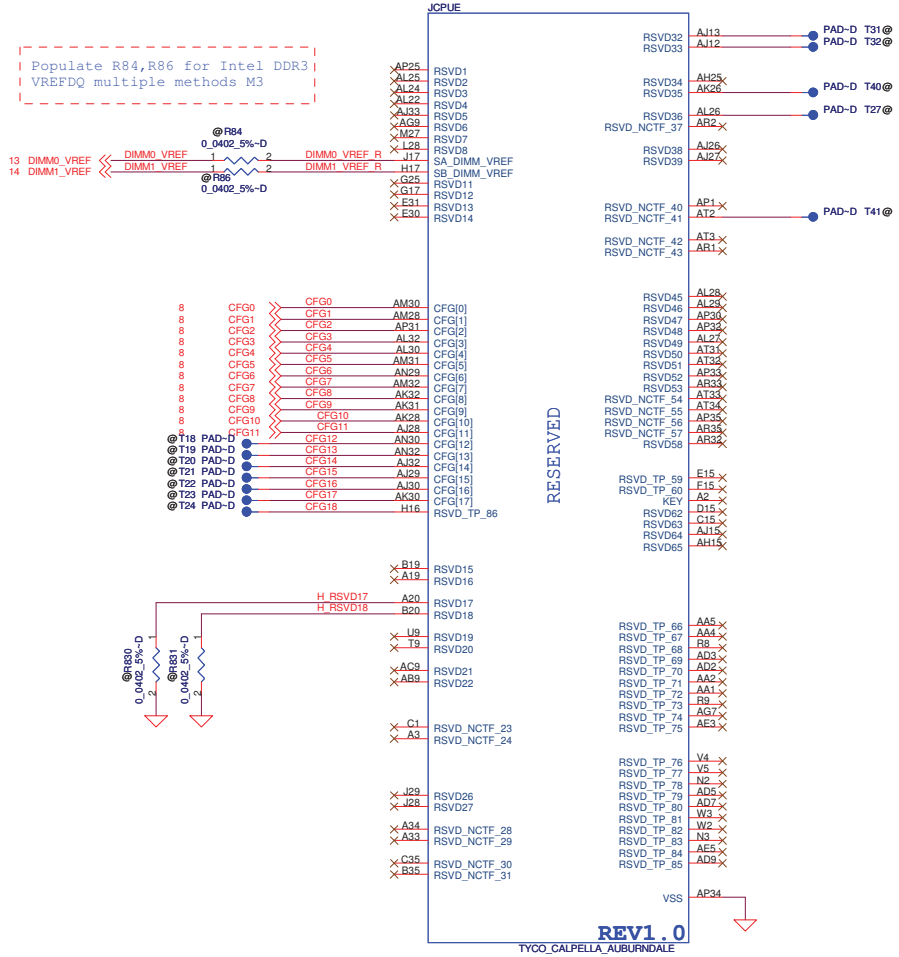

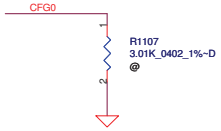

PCI-Express Configuration Select	
CFG0	1 : Single PEG 0 : Bifurcation enable

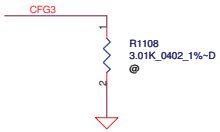

PCI-Express Static Lane Reversal	
CFG3	1 : Normal Operation 0 : Lane Number Reversed 15->0, 14->1 ...

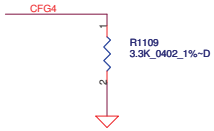

Display Port Presence	
CFG4	1 : Disabled; No Physical Display Port attached to Embedded Display Port 0 : Enabled; An external Display Port device is connected to the Embedded Display Port

DELL CONFIDENTIAL/PROPRIETARY

PROPRIETARY NOTE: THIS SHEET OF ENGINEERING DRAWING AND SPECIFICATIONS CONTAINS CONFIDENTIAL TRADE SECRET AND OTHER PROPRIETARY INFORMATION OF DELL INC. ("DELL") THIS DOCUMENT MAY NOT BE TRANSFERRED OR COPIED WITHOUT THE EXPRESS WRITTEN AUTHORIZATION OF DELL. IN ADDITION, NEITHER THIS SHEET NOR THE INFORMATION IT CONTAINS WAY BE USED BY OR DISCLOSED TO ANY THIRD PARTY WITHOUT DELL'S EXPRESS WRITTEN CONSENT.

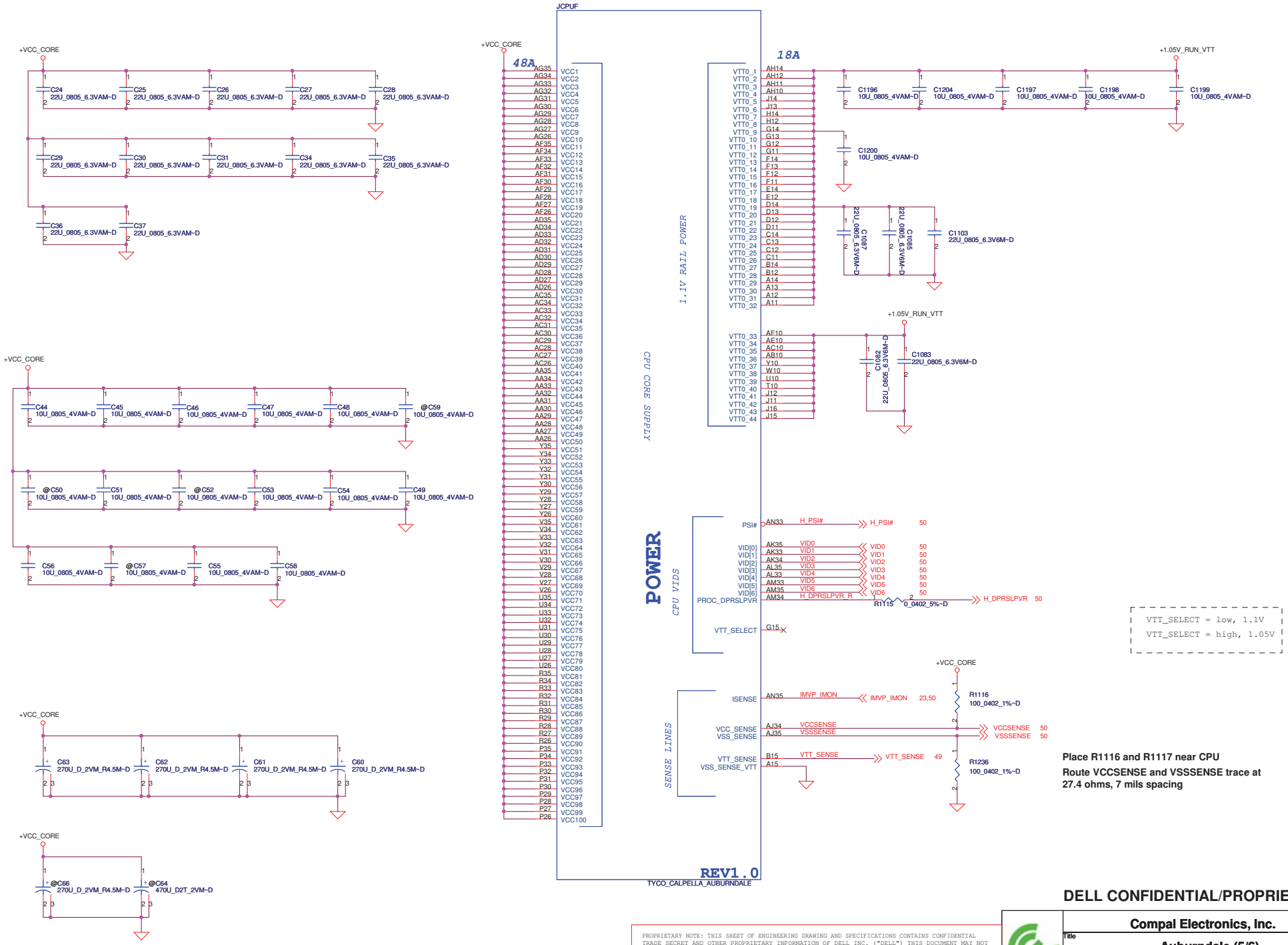

Place R1116 and R1117 near CPU

Route VCCSENSE and VSSSENSE trace at 27.4 ohms, 7 mils spacing

DELL CONFIDENTIAL/PROPRIETARY

PROPRIETARY NOTE: THIS SHEET OF ENGINEERING DRAWING AND SPECIFICATIONS CONTAINS CONFIDENTIAL TRADE SECRET AND OTHER PROPRIETARY INFORMATION OF DELL INC. ("DELL") THIS DOCUMENT MAY NOT BE TRANSFERRED OR COPIED WITHOUT THE EXPRESS WRITTEN AUTHORIZATION OF DELL. IN ADDITION, NEITHER THIS SHEET NOR THE INFORMATION IT CONTAINS WAY BE USED BY OR DISCLOSED TO ANY THIRD PARTY WITHOUT DELL'S EXPRESS WRITTEN CONSENT.

Compal Electronics, Inc.	
Title	Auburndale (5/6)
Size	Document Number: LA-5571P
Rev	0.1
Date: Thursday, January 21, 2010	Sheet 11 of 60

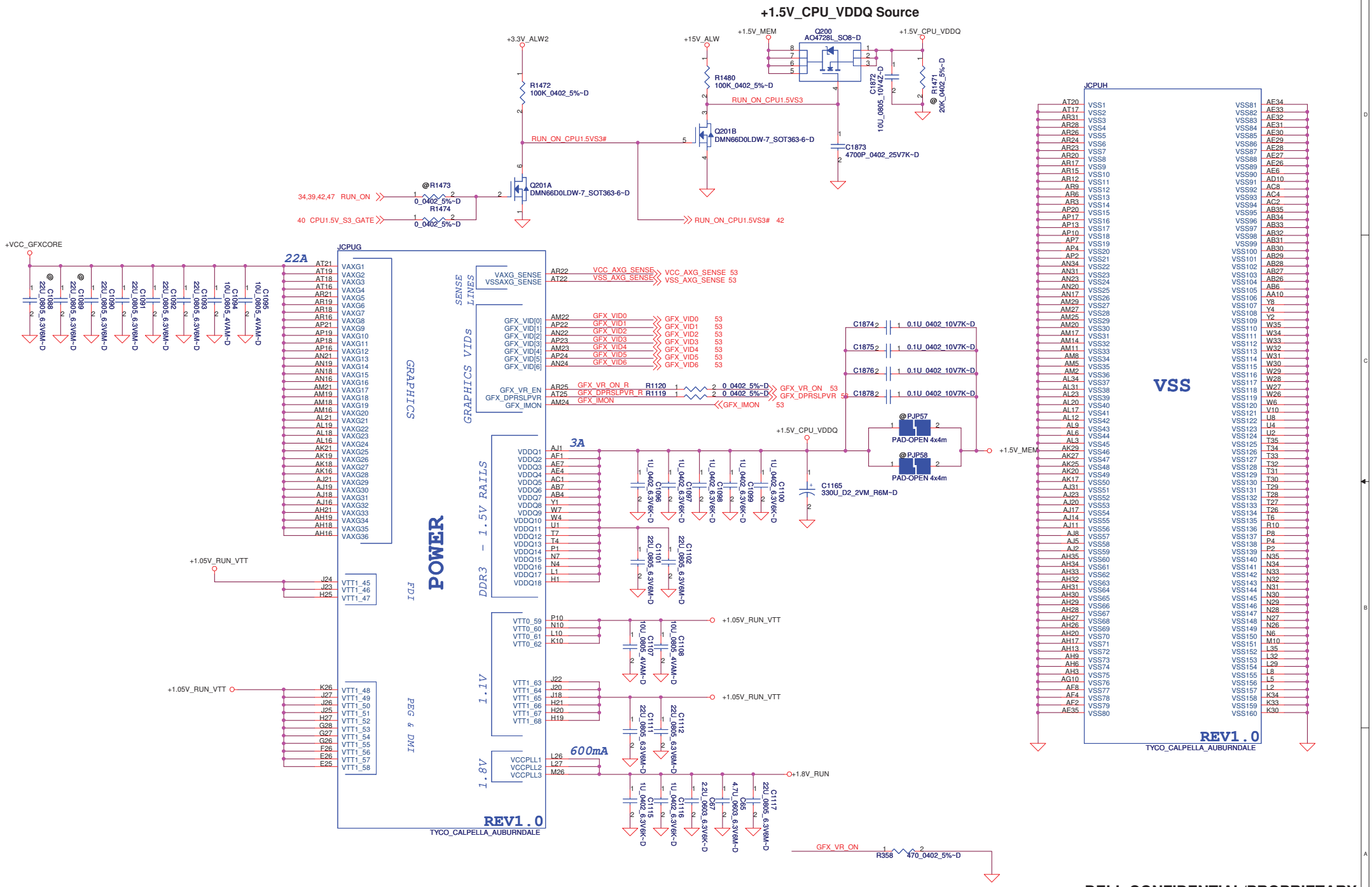

PROPRIETARY NOTE: THIS SHEET OF ENGINEERING DRAWING AND SPECIFICATIONS CONTAINS CONFIDENTIAL TRADE SECRET AND OTHER PROPRIETARY INFORMATION OF DELL INC. ("DELL") THIS DOCUMENT MAY NOT BE TRANSFERRED OR COPIED WITHOUT THE EXPRESS WRITTEN AUTHORIZATION OF DELL. IN ADDITION, NEITHER THIS SHEET NOR THE INFORMATION IT CONTAINS WAY BE USED BY OR DISCLOSED TO ANY THIRD PARTY WITHOUT DELL'S EXPRESS WRITTEN CONSENT.

DELL CONFIDENTIAL/PROPRIETARY

Compal Electronics, Inc.

Title	Auburndale (6/6)	
Size	Document Number: LA-5571P	Rev 0.1
Date: Thursday, January 21, 2010	Sheet 12 of 60	

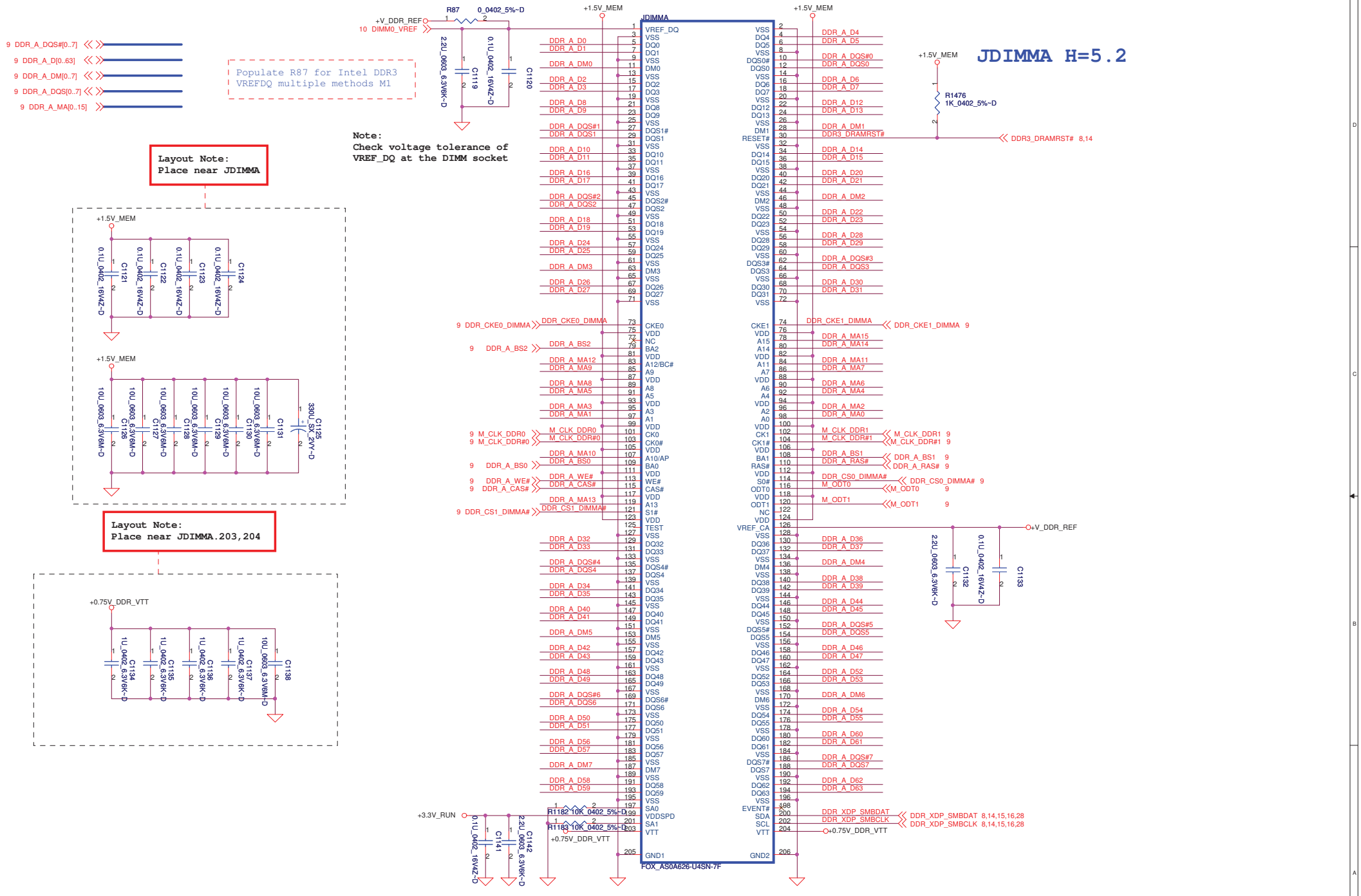

DELL CONFIDENTIAL/PROPRIETARY

Compal Electronics, Inc.

Title: DDRIII-SODIMM SLOT1

Size: | Document Number: LA-5571P | Rev: 0.1

Date: Thursday, January 21, 2010 | Sheet 13 of 60

PROPRIETARY NOTE: THIS SHEET OF ENGINEERING DRAWING AND SPECIFICATIONS CONTAINS CONFIDENTIAL TRADE SECRET AND OTHER PROPRIETARY INFORMATION OF DELL INC. ("DELL") THIS DOCUMENT MAY NOT BE TRANSFERRED OR COPIED WITHOUT THE EXPRESS WRITTEN AUTHORIZATION OF DELL. IN ADDITION, NEITHER THIS SHEET NOR THE INFORMATION IT CONTAINS WAY BE USED BY OR DISCLOSED TO ANY THIRD PARTY WITHOUT DELL'S EXPRESS WRITTEN CONSENT.

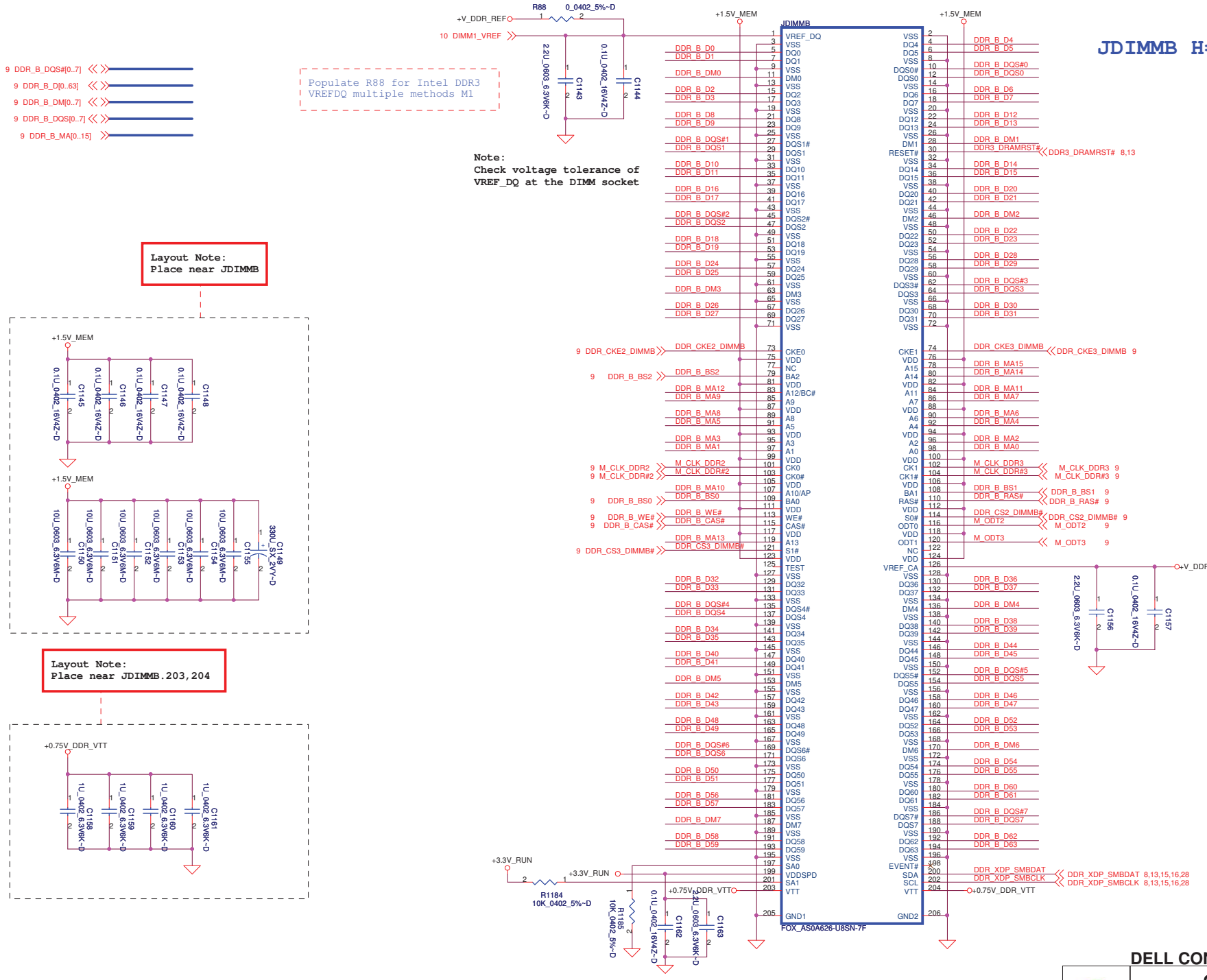

DELL CONFIDENTIAL/PROPRIETARY

Compal Electronics, Inc.

Title: DDRIII-SODIMM SLOT2

Size | Document Number: LA-5571P | Rev: 0.1

Date: Thursday, January 21, 2010 | Sheet 14 of 60

PROPRIETARY NOTE: THIS SHEET OF ENGINEERING DRAWING AND SPECIFICATIONS CONTAINS CONFIDENTIAL TRADE SECRET AND OTHER PROPRIETARY INFORMATION OF DELL INC. ("DELL") THIS DOCUMENT MAY NOT BE TRANSFERRED OR COPIED WITHOUT THE EXPRESS WRITTEN AUTHORIZATION OF DELL. IN ADDITION, NEITHER THIS SHEET NOR THE INFORMATION IT CONTAINS WAY BE USED BY OR DISCLOSED TO ANY THIRD PARTY WITHOUT DELL'S EXPRESS WRITTEN CONSENT.

CMOS_CLR1	CMOS setting
Shunt	Clear CMOS
Open	Keep CMOS

ME_CLR1	TPM setting
Shunt	Clear ME RTC Registers
Open	Keep ME RTC Registers

INTVRMEN- Integrated SUS 1.1V VRM Enable
High - Enable Internal VRs

On Die PLL VR is supplied by 1.5V when sampled high, 1.8 V when sampled low

Disconnect to XDP trace, add R1532/1533

Stuff R128,no stuff R123 when production

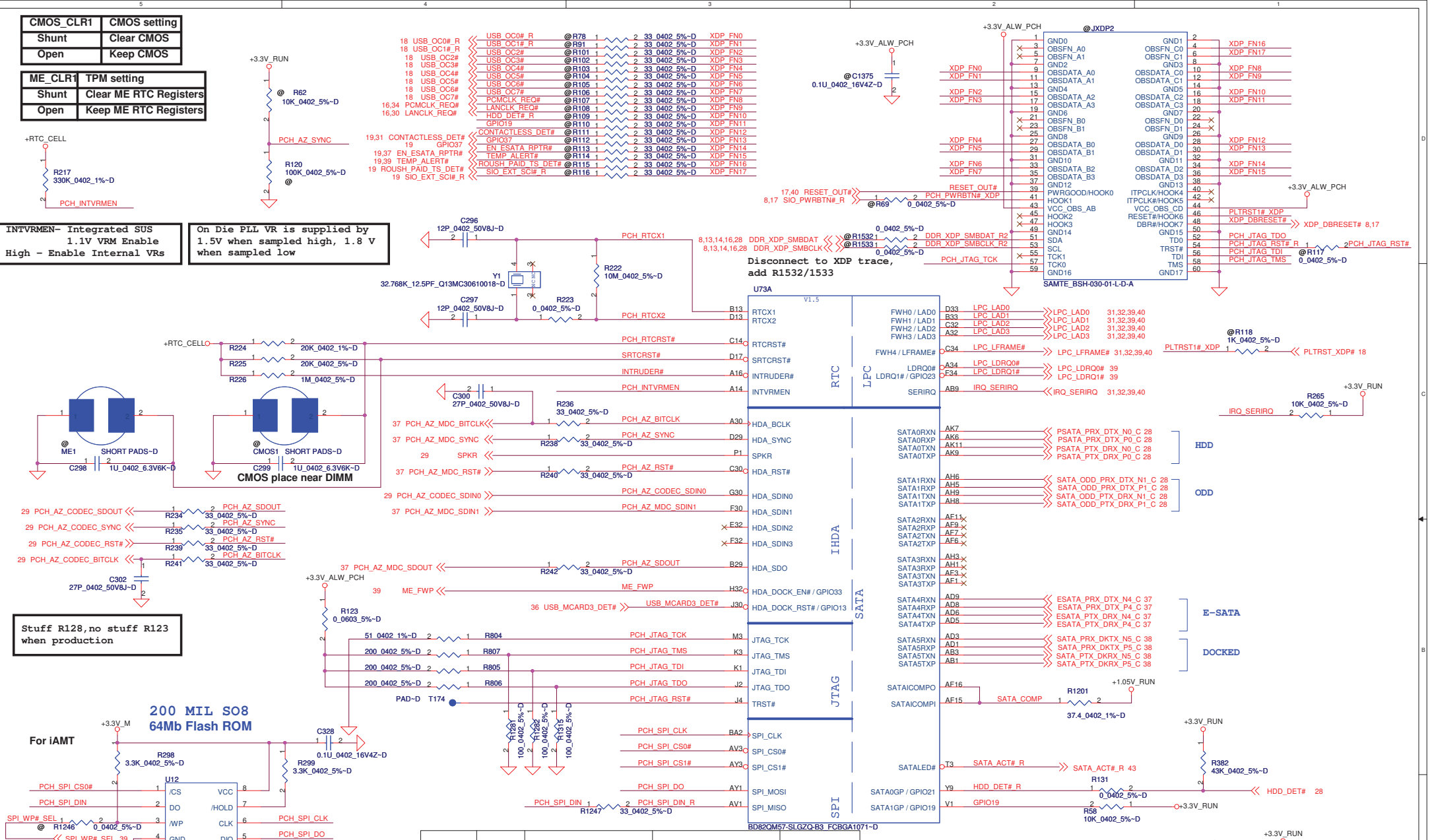

		PCH JTAG Enable		PCH JTAG Disable		Production
PCH Pin	Ref.	ES1	ES2	ES1	ES2	All
TDO	R806	No Stuff	200 ohm	No Stuff	No Stuff	No Stuff
	R1315	No Stuff	100 ohm	No Stuff	No Stuff	No Stuff
TMS	R807	200 ohm	200 ohm	No Stuff	No Stuff	No Stuff
	R1281	100 ohm	100 ohm	No Stuff	No Stuff	No Stuff
TDI	R805	200 ohm	200 ohm	20K ohm	No Stuff	No Stuff
	R1282	100 ohm	100 ohm	10K ohm	No Stuff	No Stuff
TCK	R804	4.7K ohm	4.7K ohm	4.7K ohm	4.7K ohm	No Stuff
TRST#	R808	20K ohm	20K ohm	No Stuff	No Stuff	
	R1316	10K ohm	10K ohm	No Stuff	No Stuff	

No Reboot Strap	
SPKR	Low = Default
	High = No Reboot

DELL CONFIDENTIAL/PROPRIETARY

Compal Electronics, Inc.

Title: PCH (1/8)

Size: | Document Number: LA-5571P | Rev: 0.1

Date: Thursday, January 21, 2010 | Sheet 15 of 60

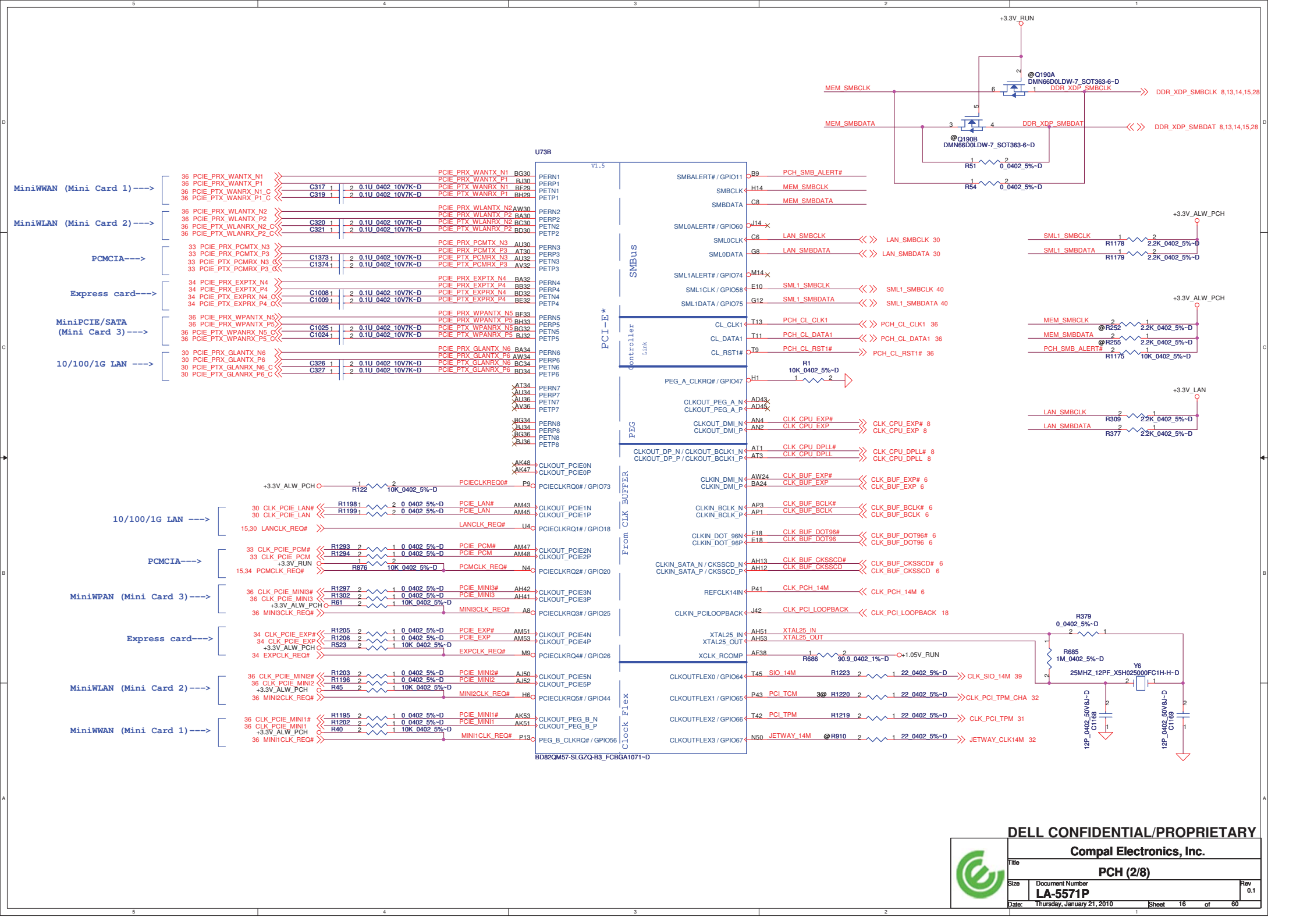

DELL CONFIDENTIAL/PROPRIETARY

Compal Electronics, Inc.

Title: PCH (2/8)

Size | Document Number: LA-5571P | Rev: 0.1

Date: Thursday, January 21, 2010 | Sheet 16 of 60

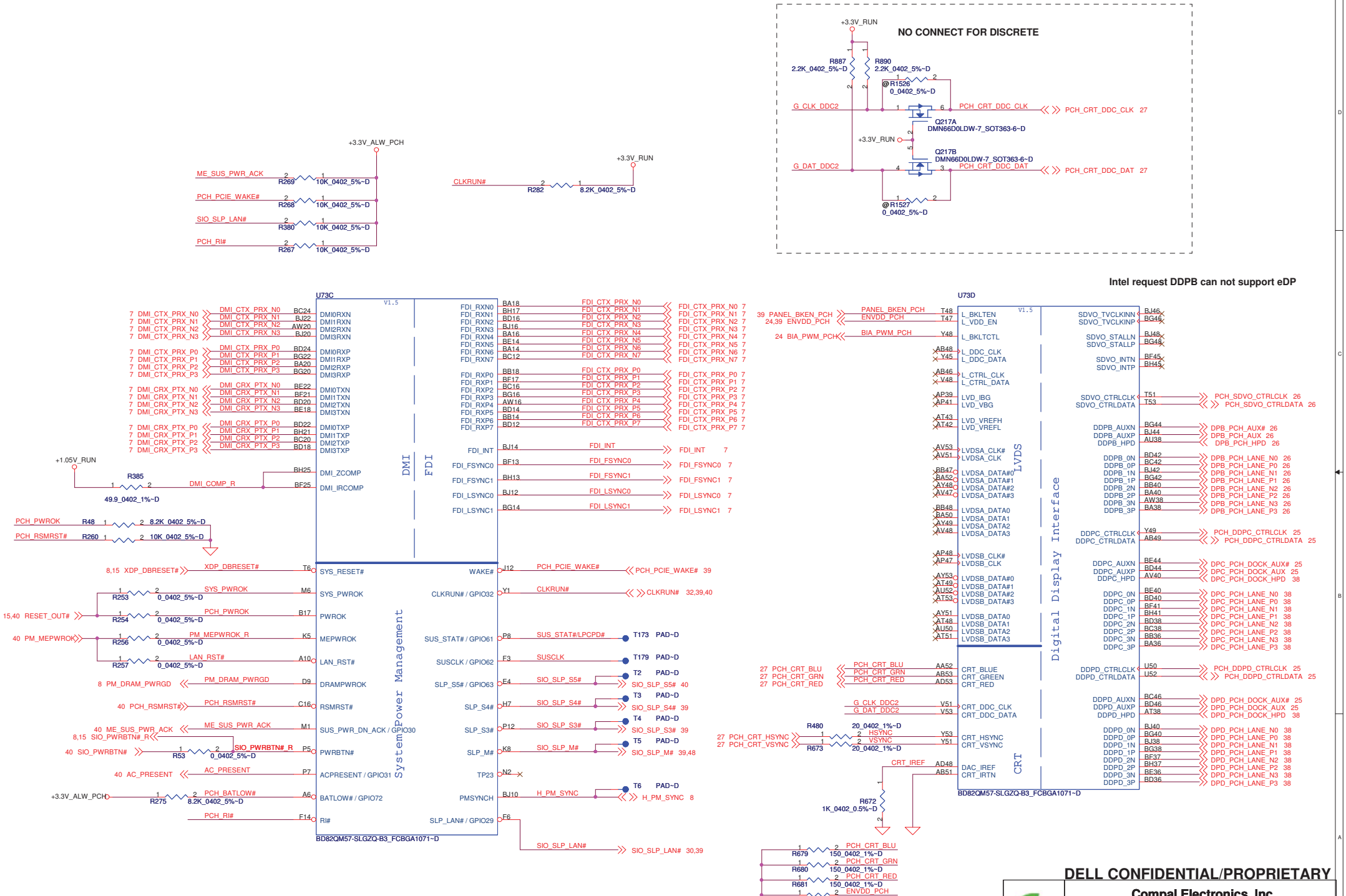
NO CONNECT FOR DISCRETE
+3.3V_RUN
R887 2.2K_0402_5%~D
R890 2.2K_0402_5%~D
@R1526 0_0402_5%~D
G_CLK_DDC2
PCH_CRT_DDC_CLK
PCH_CRT_DDC_CLK 27
Q217A DMN66D0LDW-7_SOT363-6~D
Q217B DMN66D0LDW-7_SOT363-6~D
G_DAT_DDC2
PCH_CRT_DDC_DAT
PCH_CRT_DDC_DAT 27
@R1527 0_0402_5%~D
+3.3V_ALW_PCH
ME_SUS_PWR_ACK R269 10K_0402_5%~D
PCH_PCIE_WAKE# R268 10K_0402_5%~D
SIO_SLP_LAN# R380 10K_0402_5%~D
PCH_RI# R267 10K_0402_5%~D
CLKRUN# R282 8.2K_0402_5%~D
Intel request DDPB can not support eDP
U73C
V1.5
DMI
FDI
System Power Management
BD82QM57-SLGZQ-B3_FCBGA1071~D
+1.05V_RUN
R385 49.9_0402_1%~D
DMI_COMP_R
PCH_PWROK R48 8.2K_0402_5%~D
PCH_RSMRST# R260 10K_0402_5%~D
XDP_DBRESET#
SYS_PWROK R253 0_0402_5%~D
PCH_PWROK R254 0_0402_5%~D
PM_MEPWROK R256 0_0402_5%~D
LAN_RST# R257 0_0402_5%~D
PM_DRAM_PWRGD
PCH_RSMRST#
ME_SUS_PWR_ACK
SIO_PWRBTN# R53 0_0402_5%~D
AC_PRESENT
PCH_BATLOW# R275 8.2K_0402_5%~D
PCH_RI#
PCH_PCIE_WAKE#
CLKRUN#
SUS_STAT#/LPCPD# T173 PAD~D
SUSCLK T179 PAD~D
SIO_SLP_S5# T2 PAD~D
SIO_SLP_S4# T3 PAD~D
SIO_SLP_S3# T4 PAD~D
SIO_SLP_M# T5 PAD~D
H_PM_SYNC T6 PAD~D
SIO_SLP_LAN#
U73D
V1.5
LVDS
Digital Display Interface
CRT
BD82QM57-SLGZQ-B3_FCBGA1071~D
PANEL_BKEN_PCH
ENVDD_PCH
BIA_PWM_PCH
PCH_SDVO_CTRLCLK
PCH_SDVO_CTRLDATA
DPB_PCH_AUX#
DPB_PCH_AUX
DPB_PCH_HPD
DPB_PCH_LANE_N0
DPB_PCH_LANE_P0
DPB_PCH_LANE_N1
DPB_PCH_LANE_P1
DPB_PCH_LANE_N2
DPB_PCH_LANE_P2
DPB_PCH_LANE_N3
DPB_PCH_LANE_P3
PCH_DDPC_CTRLCLK
PCH_DDPC_CTRLDATA
DPC_PCH_DOCK_AUX#
DPC_PCH_DOCK_AUX
DPC_PCH_DOCK_HPD
DPC_PCH_LANE_N0
DPC_PCH_LANE_P0
DPC_PCH_LANE_N1
DPC_PCH_LANE_P1
DPC_PCH_LANE_N2
DPC_PCH_LANE_P2
DPC_PCH_LANE_N3
DPC_PCH_LANE_P3
PCH_DDPD_CTRLCLK
PCH_DDPD_CTRLDATA
DPD_PCH_DOCK_AUX#
DPD_PCH_DOCK_AUX
DPD_PCH_DOCK_HPD
DPD_PCH_LANE_N0
DPD_PCH_LANE_P0
DPD_PCH_LANE_N1
DPD_PCH_LANE_P1
DPD_PCH_LANE_N2
DPD_PCH_LANE_P2
DPD_PCH_LANE_N3
DPD_PCH_LANE_P3
PCH_CRT_BLU
PCH_CRT_GRN
PCH_CRT_RED
G_CLK_DDC2
G_DAT_DDC2
PCH_CRT_HSYNC
PCH_CRT_VSYNC
R480 20_0402_1%~D
R673 20_0402_1%~D
CRT_IREF
R672 1K_0402_0.5%~D
R679 150_0402_1%~D
R680 150_0402_1%~D
R681 150_0402_1%~D
R682 100K_0402_5%~D
DELL CONFIDENTIAL/PROPRIETARY
Compal Electronics, Inc.
Title
PCH (3/8)
Size
Document Number
LA-5571P
Rev 0.1
Date: Thursday, January 21, 2010
Sheet 17 of 60

PCH XDP ENABLE	Stuff: R78,R89,R101~R116
	No Stuff: R71,R77,RP1,RP2,R45,R40,R131,R58,R1242,R1243,R1244,R1245,R74,R130
PCH XDP DISABLE	Stuff: R71,R77,RP1,RP2,R45,R40,R131,R58,R1242,R1243,R1244,R1245,R74,R130
	No Stuff: R78,R89,R101~R116

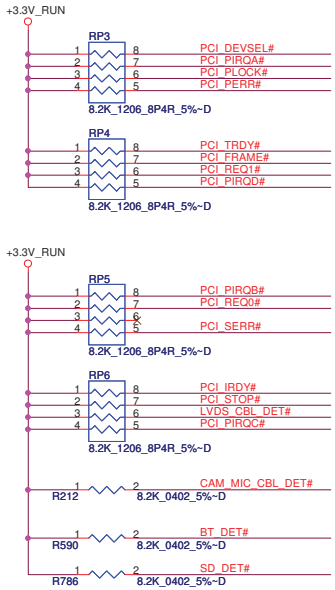

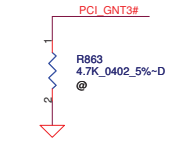

A16 swap override Strap/Top-Block Swap Override jumper	
PCI_GNT#3	Low = A16 swap High = Default

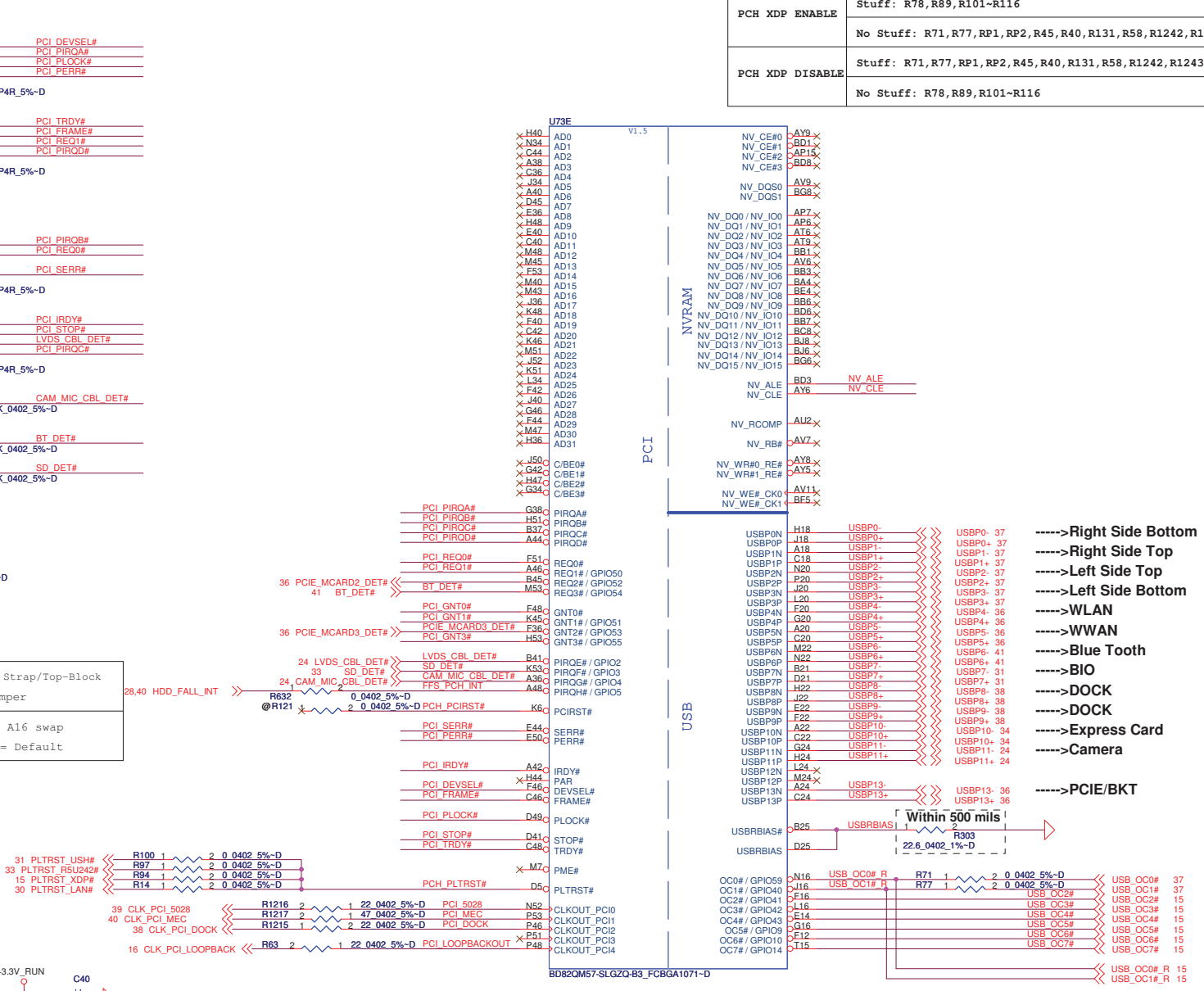

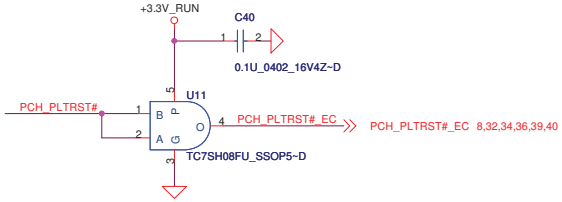

Boot BIOS Strap		
PCI_GNT#1	PCI_GNT#0	Boot BIOS Location
0	0	LPC
0	1	Reserved (NAND)
1	0	PCI
1	1	SPI

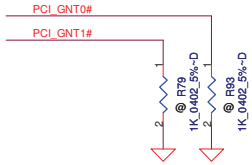

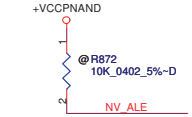

Danbury Technology Enabled	
NV_ALE	High = Enabled (Default) Low = Disabled

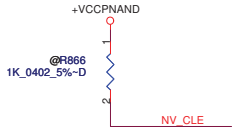

DMI Termination Voltage	
NV_CLE	Set to Vss when LOW Set to Vcc when HIGH

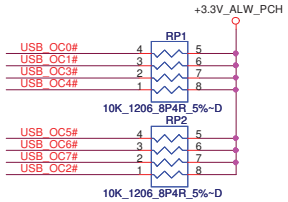

DELL CONFIDENTIAL/PROPRIETARY

Compal Electronics, Inc.

Title: PCH (4/8)

Size | Document Number: LA-5571P | Rev: 0.1

Date: Thursday, January 21, 2010 | Sheet 18 of 60

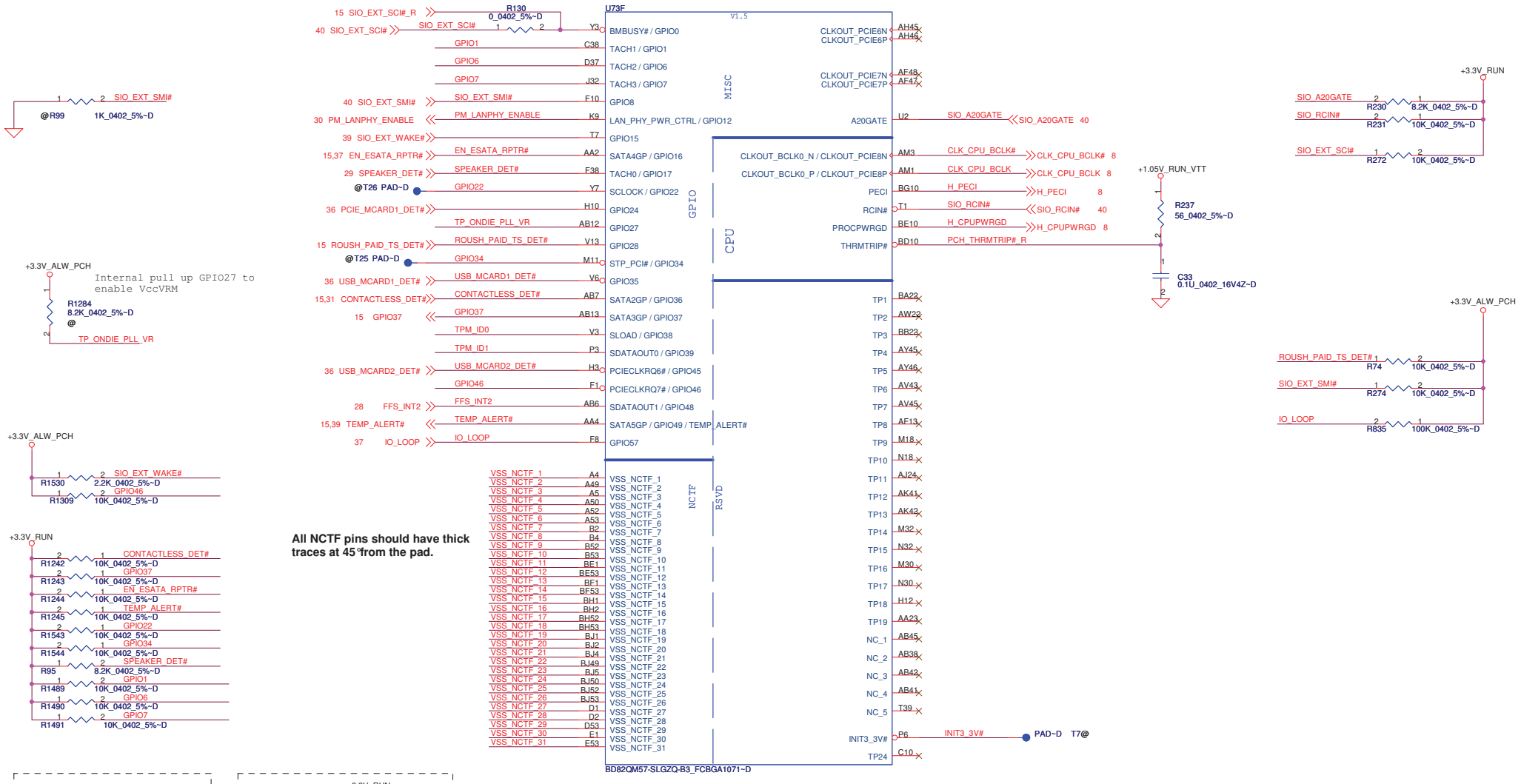

	TPM_ID0	TPM_ID1
China TPM	0	0
No TPM, No China TPM	0	1
USH1.0 (For SSI)	1	0
USH2.0	1	1

-----> will use MEMO control pop R339 & de-pop R787 when USH1.0 enable for SSI build only

DELL CONFIDENTIAL/PROPRIETARY

Compal Electronics, Inc.

Title: PCH (5/8)

Size | Document Number: LA-5571P | Rev: 0.1

Date: Thursday, January 21, 2010 | Sheet 19 of 60

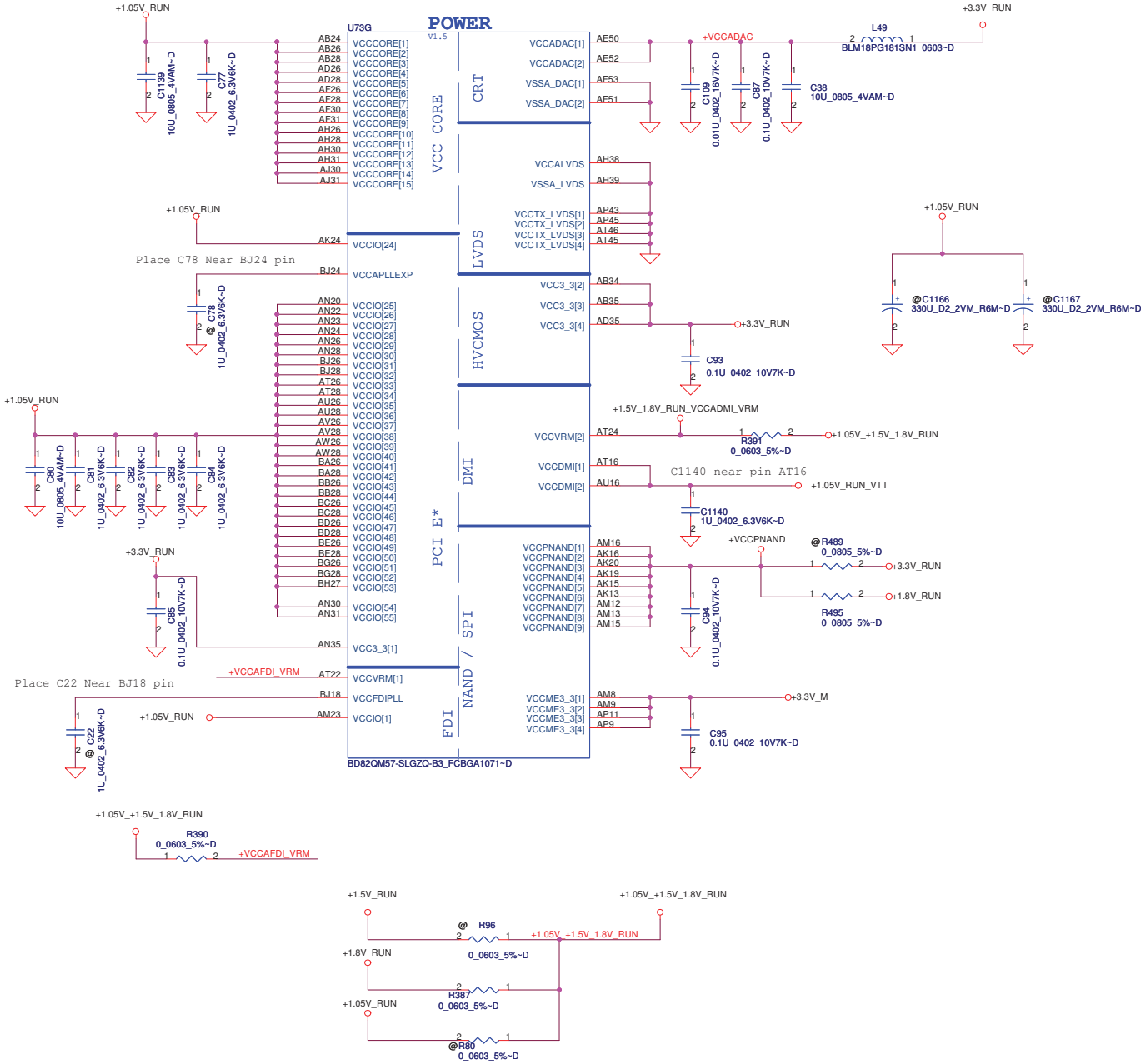

PCH Power Rail Table

Voltage Rail	Voltage	S0 Iccmax Current (A)
V_CPU_IO	1.1/1.05	< 1 (mA)
V5REF	5	< 1 (mA)
V5REF_Sus	5	< 1 (mA)
Vcc3_3	3.3	0.357
VccAClk	1.1	0.052
VccADAC	3.3	0.069
VccADPLLA	1.1	0.068
VccADPLLB	1.1	0.069
VccapllEXP	1.1	0.04
VccCore	1.1	1.432
VccDMI	1.1	0.058
VccDMI	1.1	0.061
VccFDIPLL	1.1	0.037
VccIO	1.1	3.062
VccLAN	1.1	0.32
VccME	1.1	1.849
VccME3_3	3.3	0.085
VccpNAND	1.8	0.156
VccRTC	3.3	2 (mA)
VccSATAPLL	1.1	0.031
VccSus3_3	3.3	0.163
VccSusHDA	3.3	0.006
VccVRM	1.8 / 1.5	0.196
VccVRM	1.05	< 1 (mA)
VccALVDS	3.3	< 1 (mA)
VccTX_LVDS	1.8	0.059

DELL CONFIDENTIAL/PROPRIETARY

Compal Electronics, Inc.

Title: PCH (6/8)

Size | Document Number: LA-5571P | Rev: 0.1

Date: Thursday, January 21, 2010 | Sheet 20 of 60

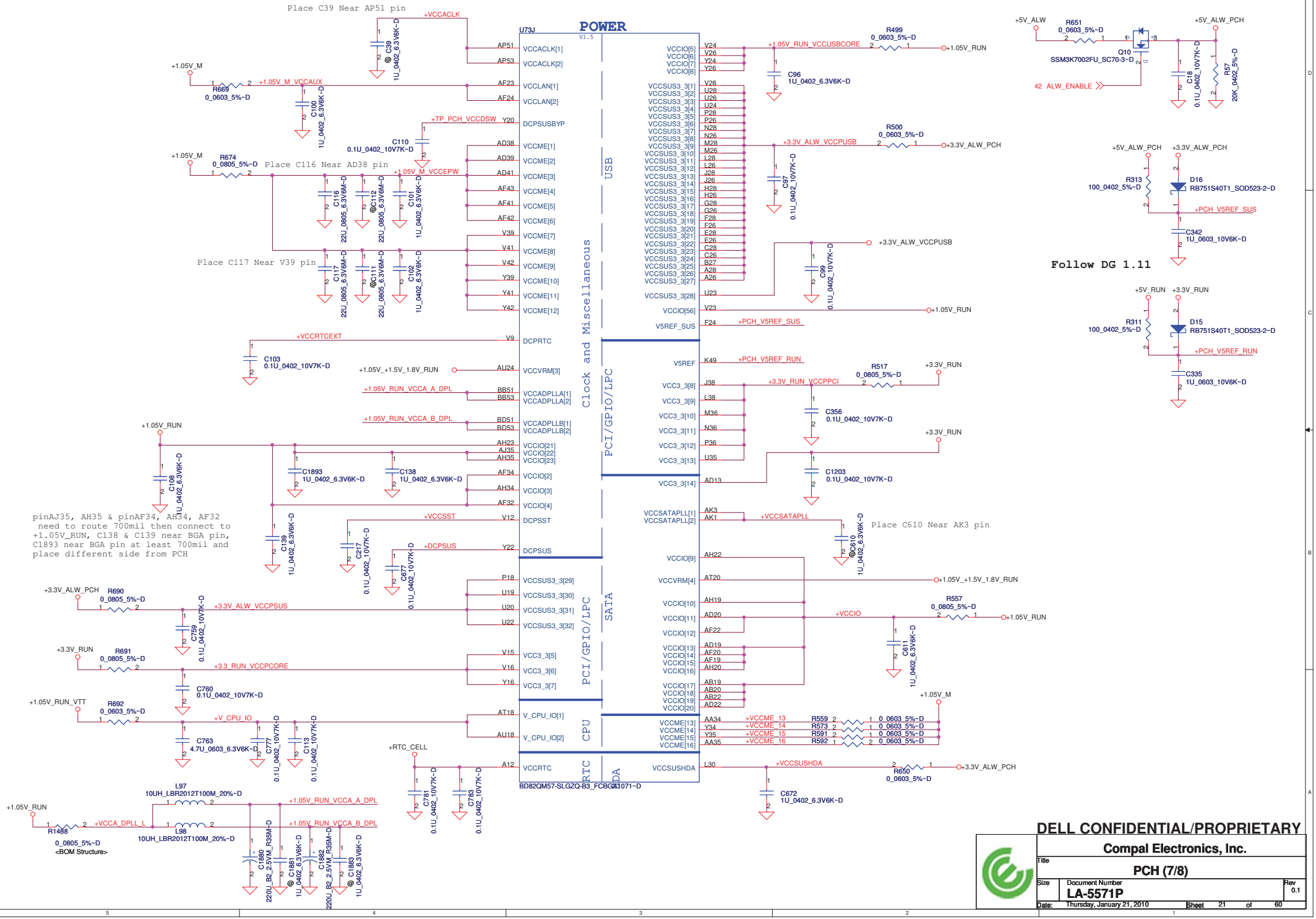
POWER
V1.5
U73J
BD82QM57-SLGZQ-B3_FCBGA1071~D
USB
Clock and Miscellaneous
PCI/GPIO/LPC
SATA
CPU
RTC
HDA
Place C39 Near AP51 pin
Place C116 Near AD38 pin
Place C117 Near V39 pin
Place C610 Near AK3 pin
Follow DG 1.11
pinAJ35, AH35 & pinAF34, AH34, AF32 need to route 700mil then connect to +1.05V_RUN, C138 & C139 near BGA pin, C1893 near BGA pin at least 700mil and place different side from PCH
DELL CONFIDENTIAL/PROPRIETARY
Compal Electronics, Inc.
Title
PCH (7/8)
Size
Document Number
LA-5571P
Rev
0.1
Date: Thursday, January 21, 2010
Sheet 21 of 60

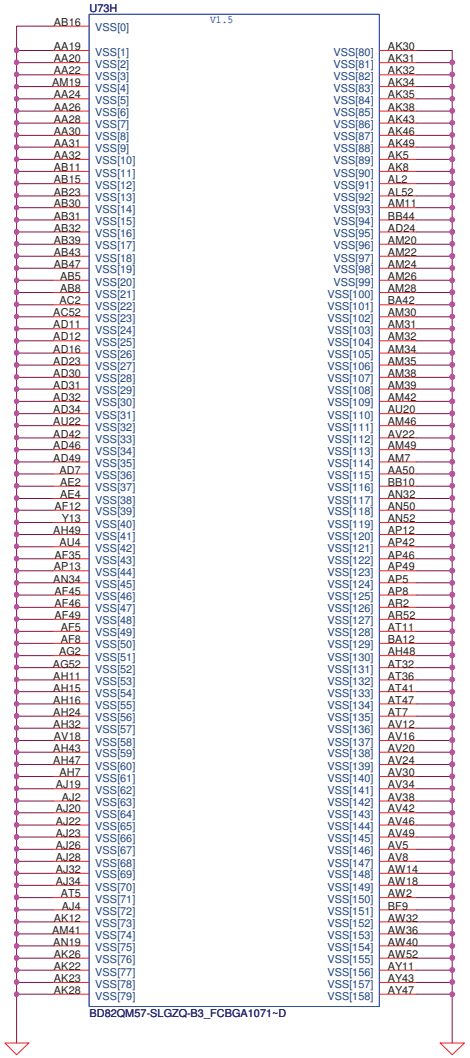

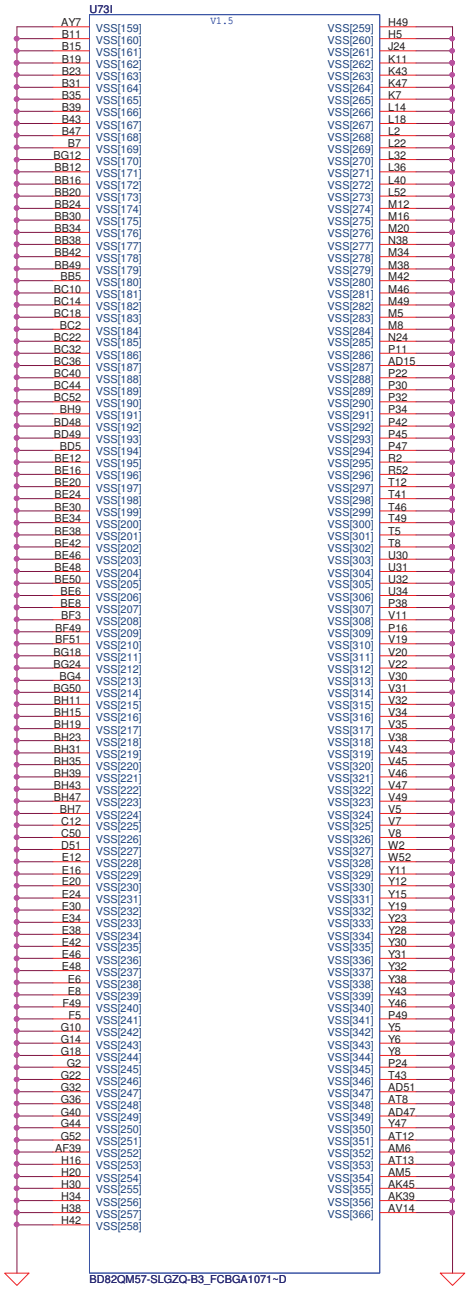

DELL CONFIDENTIAL/PROPRIETARY

Compal Electronics, Inc.		
Title: PCH (8/8)		
Size	Document Number: LA-5571P	Rev: 0.1
Date: Thursday, January 21, 2010	Sheet 22 of 60	

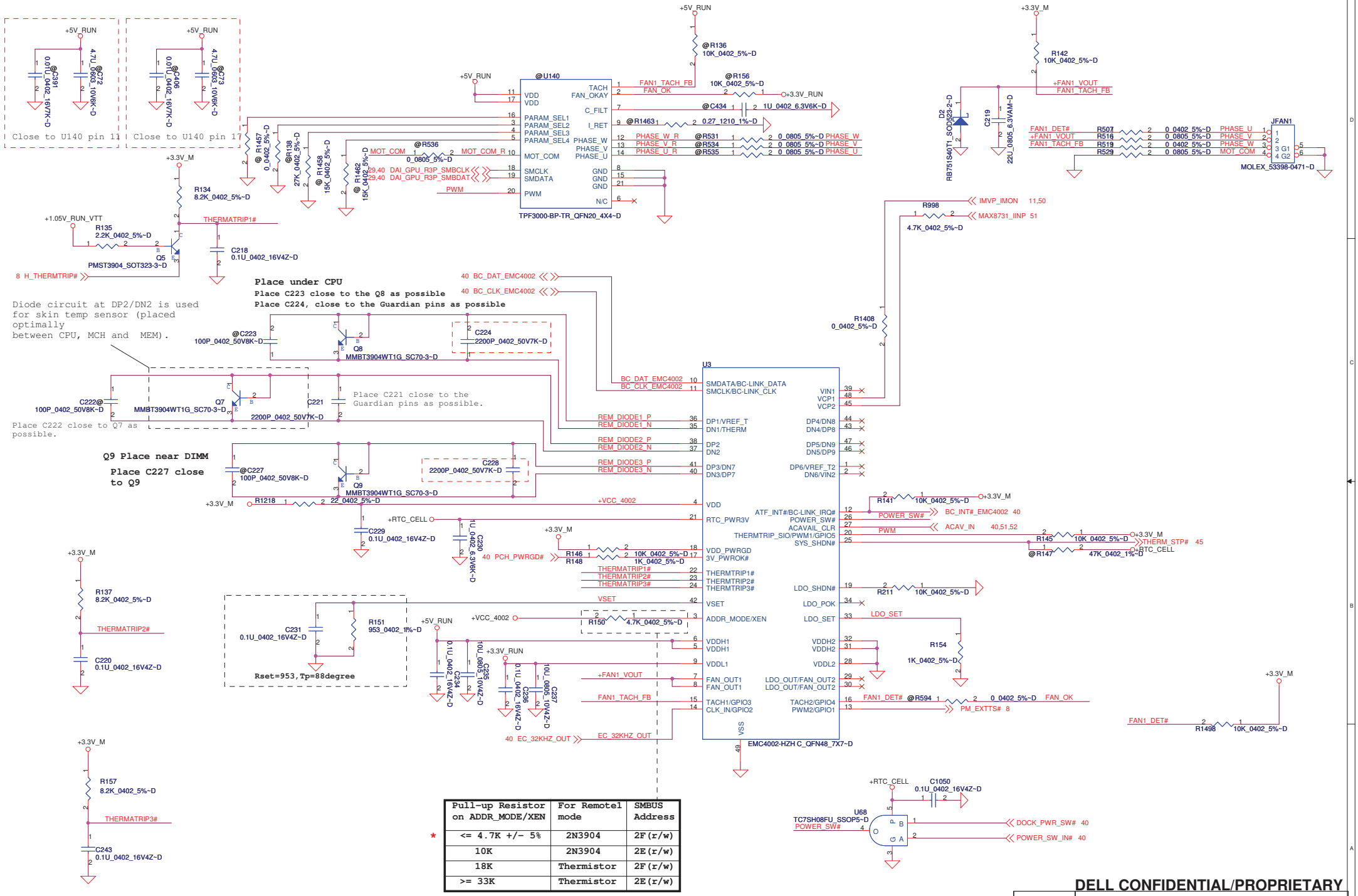

Pull-up Resistor on ADDR_MODE/XEN	For Remote1 mode	SMBUS Address
* <= 4.7K +/- 5%	2N3904	2F(r/w)
10K	2N3904	2E(r/w)
18K	Thermistor	2F(r/w)
>= 33K	Thermistor	2E(r/w)

PROPRIETARY NOTE: THIS SHEET OF ENGINEERING DRAWING AND SPECIFICATIONS CONTAINS CONFIDENTIAL TRADE SECRET AND OTHER PROPRIETARY INFORMATION OF DELL INC. ("DELL") THIS DOCUMENT MAY NOT BE TRANSFERRED OR COPIED WITHOUT THE EXPRESS WRITTEN AUTHORIZATION OF DELL. IN ADDITION, NEITHER THIS SHEET NOR THE INFORMATION IT CONTAINS WAY BE USED BY OR DISCLOSED TO ANY THIRD PARTY WITHOUT DELL'S EXPRESS WRITTEN CONSENT.

DELL CONFIDENTIAL/PROPRIETARY

Compal Electronics, Inc.

Title: FAN & Thermal Sensor

Size: | Document Number: LA-5571P | Rev: 0.1

Date: Thursday, January 21, 2010 | Sheet 23 of 60

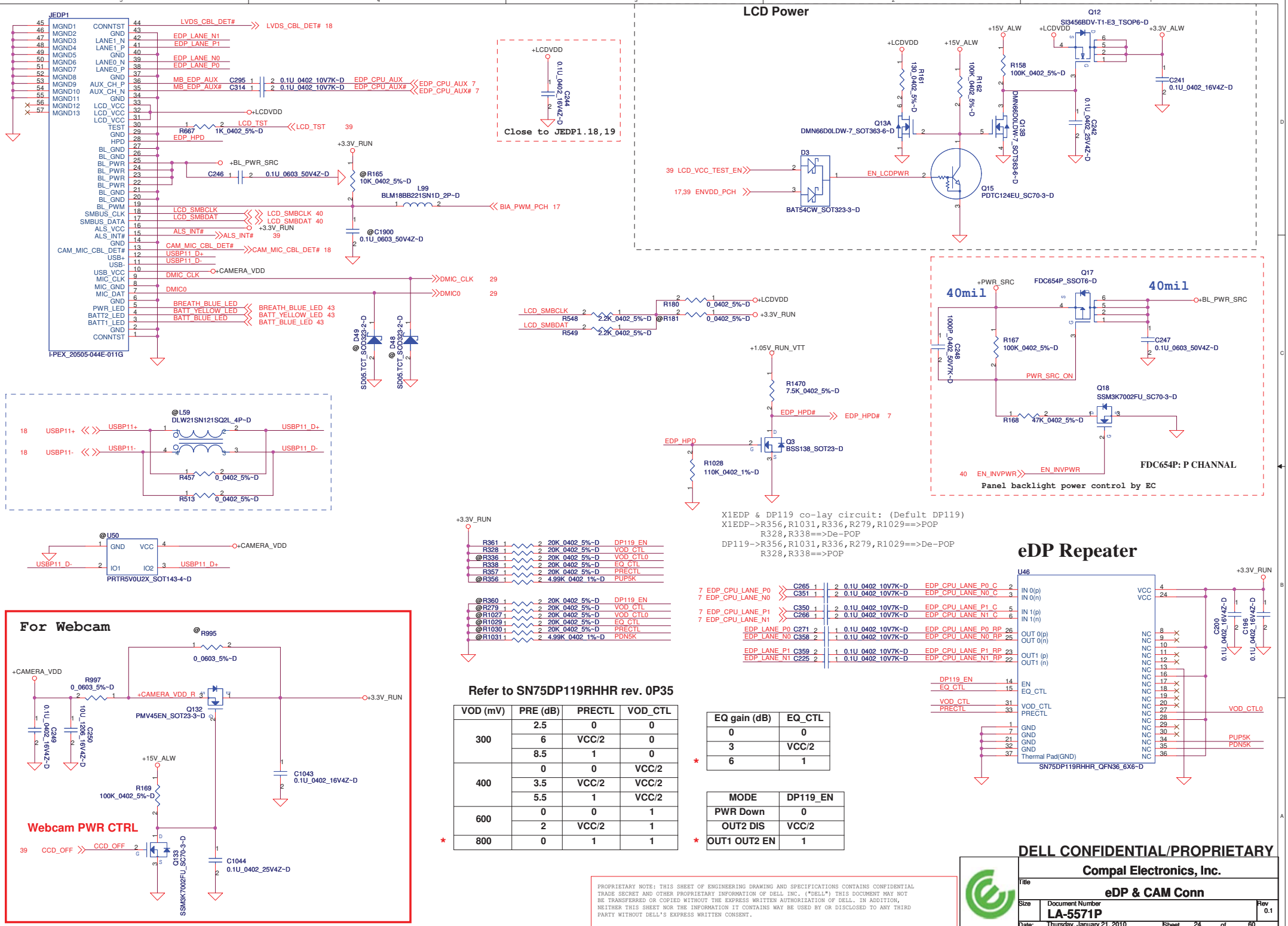

VOD (mV)	PRE (dB)	PRECTL	VOD_CTL
300	2.5	0	0
	6	VCC/2	0
	8.5	1	0
400	0	0	VCC/2
	3.5	VCC/2	VCC/2
	5.5	1	VCC/2
600	0	0	1
	2	VCC/2	1
* 800	0	1	1

EQ gain (dB)	EQ_CTL
0	0
3	VCC/2
* 6	1

MODE	DP119_EN
PWR Down	0
OUT2 DIS	VCC/2
* OUT1 OUT2 EN	1

PROPRIETARY NOTE: THIS SHEET OF ENGINEERING DRAWING AND SPECIFICATIONS CONTAINS CONFIDENTIAL TRADE SECRET AND OTHER PROPRIETARY INFORMATION OF DELL INC. ("DELL") THIS DOCUMENT MAY NOT BE TRANSFERRED OR COPIED WITHOUT THE EXPRESS WRITTEN AUTHORIZATION OF DELL. IN ADDITION, NEITHER THIS SHEET NOR THE INFORMATION IT CONTAINS WAY BE USED BY OR DISCLOSED TO ANY THIRD PARTY WITHOUT DELL'S EXPRESS WRITTEN CONSENT.

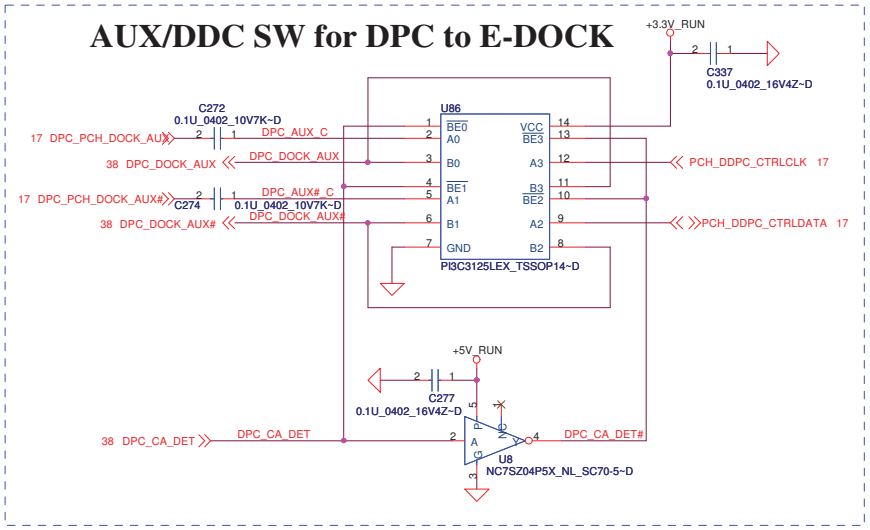

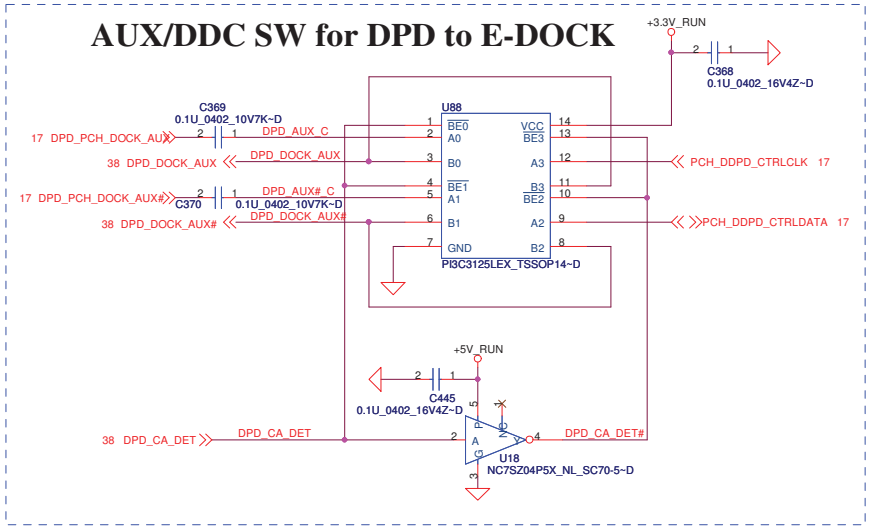

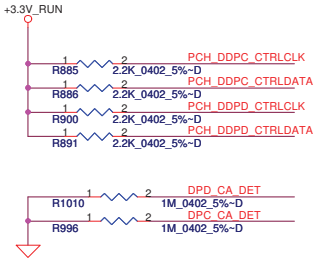

Intel WW18 Strapping option

Intel WW18 Strapping option

PROPRIETARY NOTE: THIS SHEET OF ENGINEERING DRAWING AND SPECIFICATIONS CONTAINS CONFIDENTIAL TRADE SECRET AND OTHER PROPRIETARY INFORMATION OF DELL INC. ("DELL") THIS DOCUMENT MAY NOT BE TRANSFERRED OR COPIED WITHOUT THE EXPRESS WRITTEN AUTHORIZATION OF DELL. IN ADDITION, NEITHER THIS SHEET NOR THE INFORMATION IT CONTAINS WAY BE USED BY OR DISCLOSED TO ANY THIRD PARTY WITHOUT DELL'S EXPRESS WRITTEN CONSENT.

DELL CONFIDENTIAL/PROPRIETARY

Compal Electronics, Inc.

Title: DPC DPD SW for DOCK

Size: | Document Number: LA-5571P | Rev: 0.1

Date: Thursday, January 21, 2010 | Sheet 25 of 60

AUX/DDC SW MB DPB

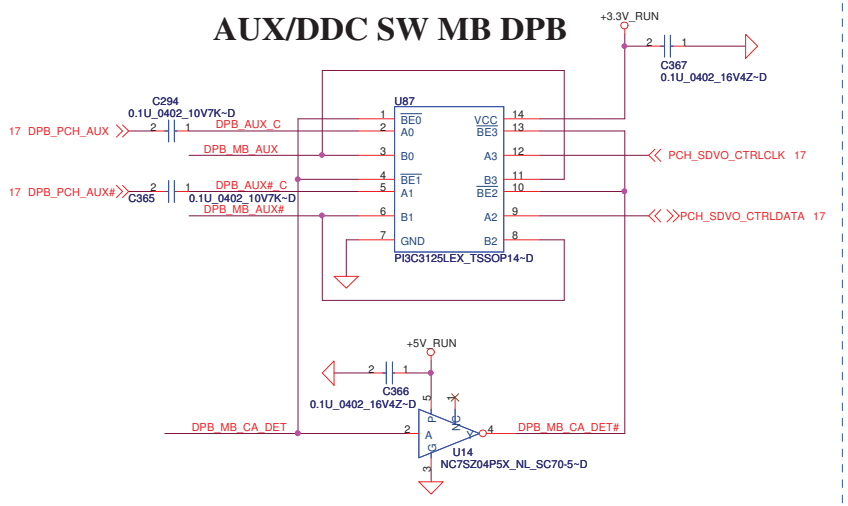

Display port Dip Connector

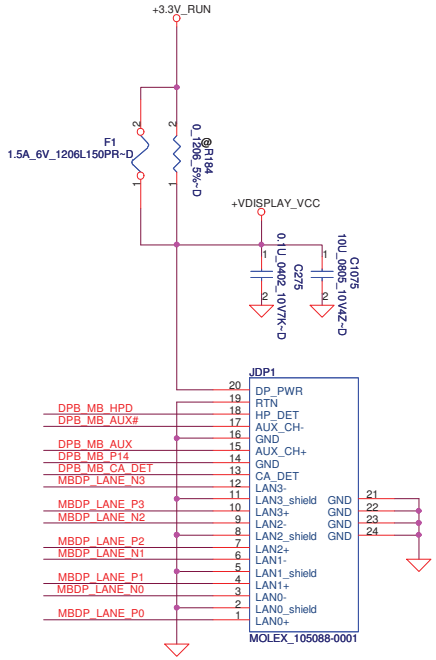

Intel WW18 Strapping option

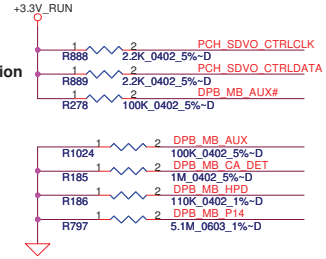

DPB Repeater for MB DP

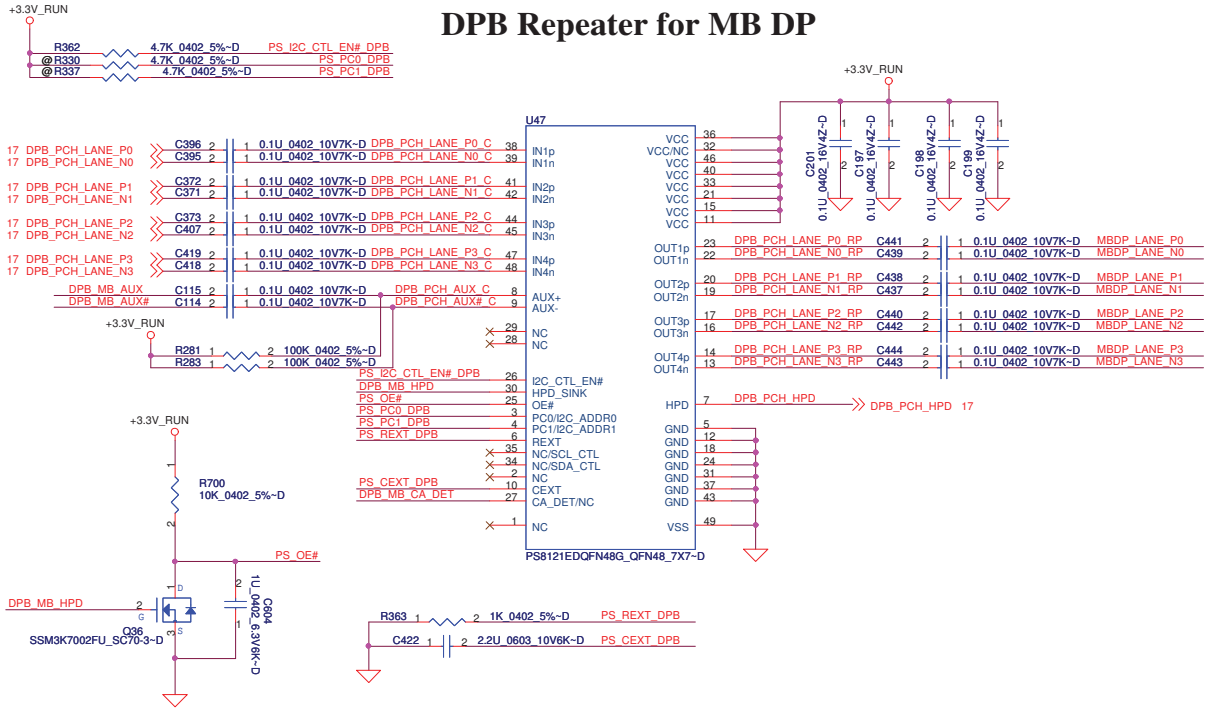

PROPRIETARY NOTE: THIS SHEET OF ENGINEERING DRAWING AND SPECIFICATIONS CONTAINS CONFIDENTIAL TRADE SECRET AND OTHER PROPRIETARY INFORMATION OF DELL INC. ("DELL") THIS DOCUMENT MAY NOT BE TRANSFERRED OR COPIED WITHOUT THE EXPRESS WRITTEN AUTHORIZATION OF DELL. IN ADDITION, NEITHER THIS SHEET NOR THE INFORMATION IT CONTAINS WAY BE USED BY OR DISCLOSED TO ANY THIRD PARTY WITHOUT DELL'S EXPRESS WRITTEN CONSENT.

DELL CONFIDENTIAL/PROPRIETARY

Compal Electronics, Inc.

Title: Display port

Size: | Document Number: LA-5571P | Rev: 0.1

Date: Thursday, January 21, 2010 | Sheet 26 of 60

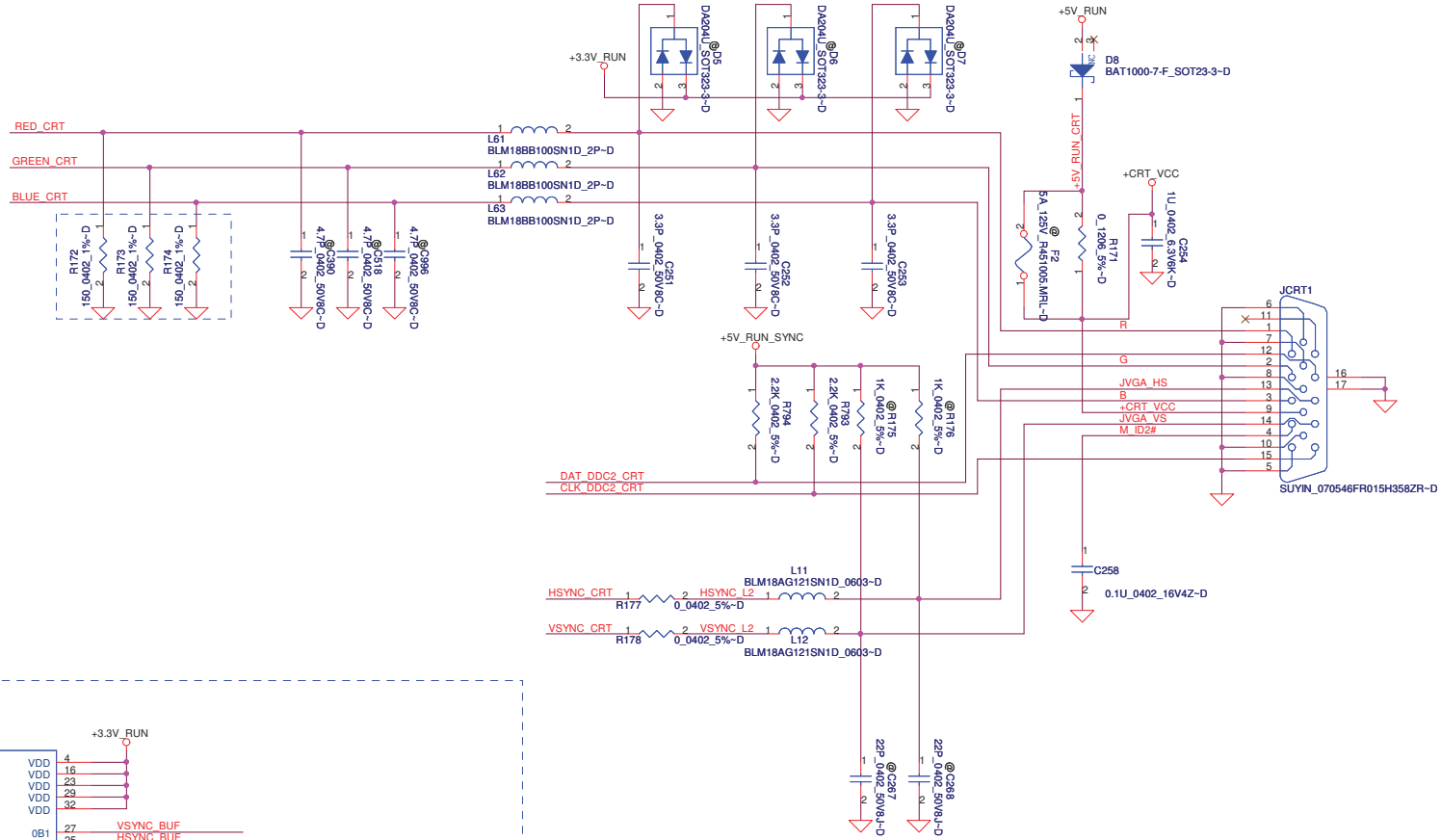

VGA SW for MB/DOCK

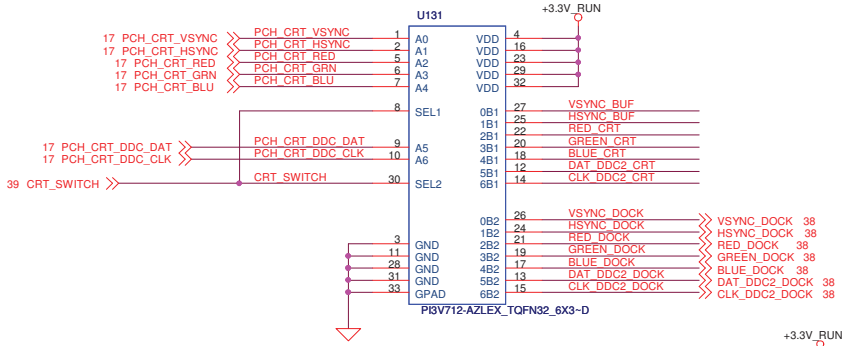

SEL1/SEL2	Chanel	Source
0	A=B1	MB
1	A=B2	APR/SPR

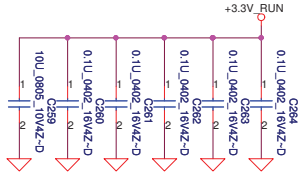

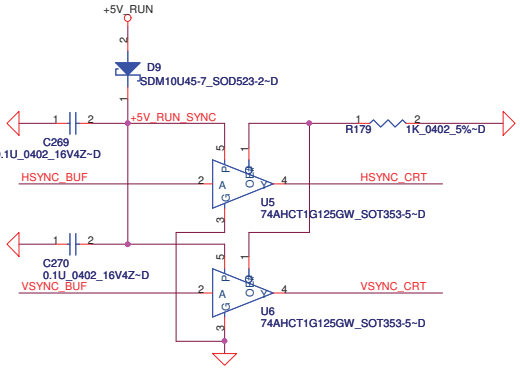

DELL CONFIDENTIAL/PROPRIETARY

PROPRIETARY NOTE: THIS SHEET OF ENGINEERING DRAWING AND SPECIFICATIONS CONTAINS CONFIDENTIAL TRADE SECRET AND OTHER PROPRIETARY INFORMATION OF DELL INC. ("DELL") THIS DOCUMENT MAY NOT BE TRANSFERRED OR COPIED WITHOUT THE EXPRESS WRITTEN AUTHORIZATION OF DELL. IN ADDITION, NEITHER THIS SHEET NOR THE INFORMATION IT CONTAINS WAY BE USED BY OR DISCLOSED TO ANY THIRD PARTY WITHOUT DELL'S EXPRESS WRITTEN CONSENT.

Compal Electronics, Inc.

Title: CRT/Video switch

Size | Document Number: LA-5571P | Rev: 0.1

Date: Thursday, January 21, 2010 | Sheet 27 of 60

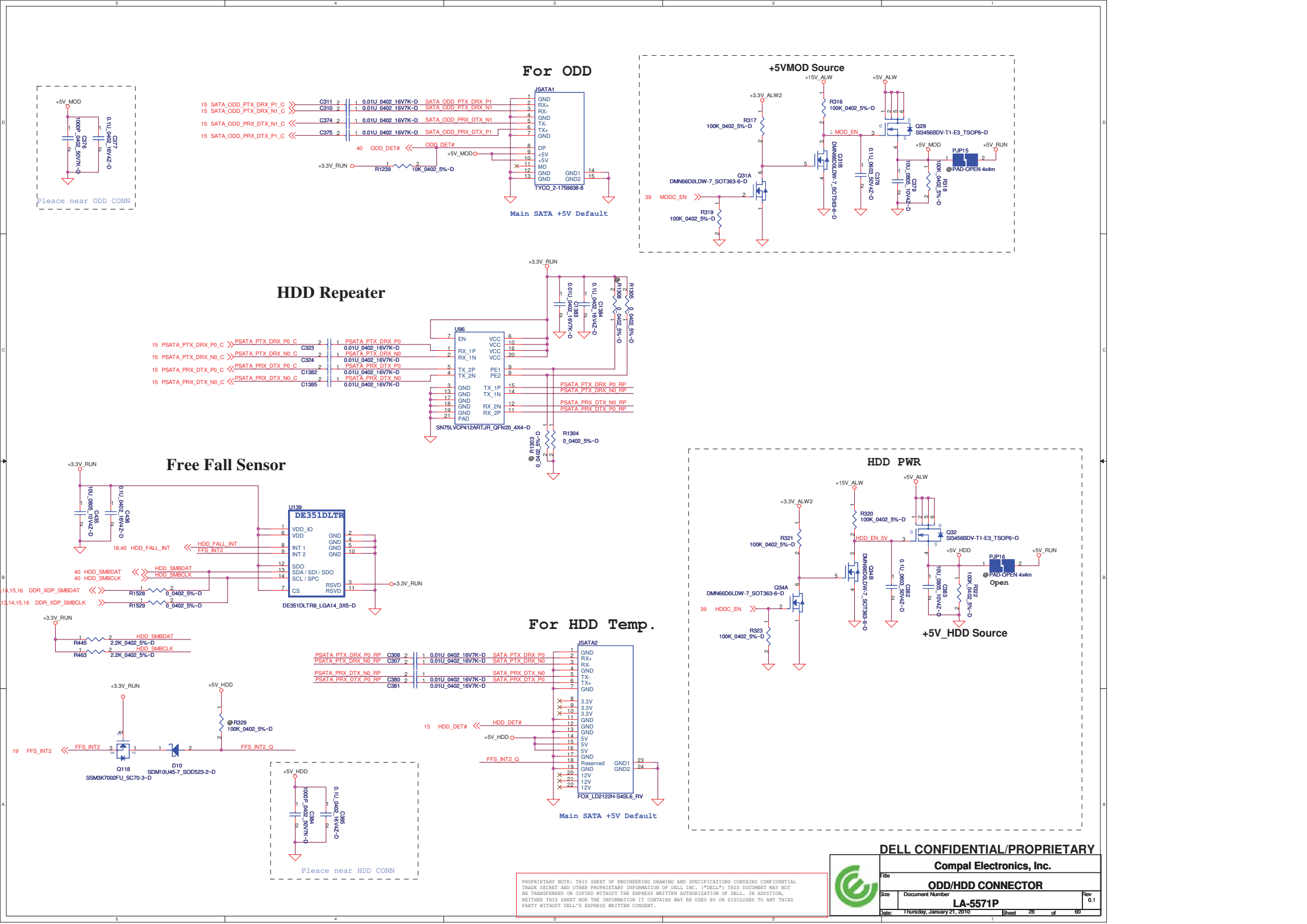

PROPRIETARY NOTE: THIS SHEET OF ENGINEERING DRAWING AND SPECIFICATIONS CONTAINS CONFIDENTIAL TRADE SECRET AND OTHER PROPRIETARY INFORMATION OF DELL INC. ("DELL") THIS DOCUMENT MAY NOT BE TRANSFERRED OR COPIED WITHOUT THE EXPRESS WRITTEN AUTHORIZATION OF DELL. IN ADDITION, NEITHER THIS SHEET NOR THE INFORMATION IT CONTAINS WAY BE USED BY OR DISCLOSED TO ANY THIRD PARTY WITHOUT DELL'S EXPRESS WRITTEN CONSENT.

DELL CONFIDENTIAL/PROPRIETARY

Compal Electronics, Inc.

Title: ODD/HDD CONNECTOR

Size | Document Number: LA-5571P | Rev: 0.1

Date: Thursday, January 21, 2010 | Sheet 28 of 60

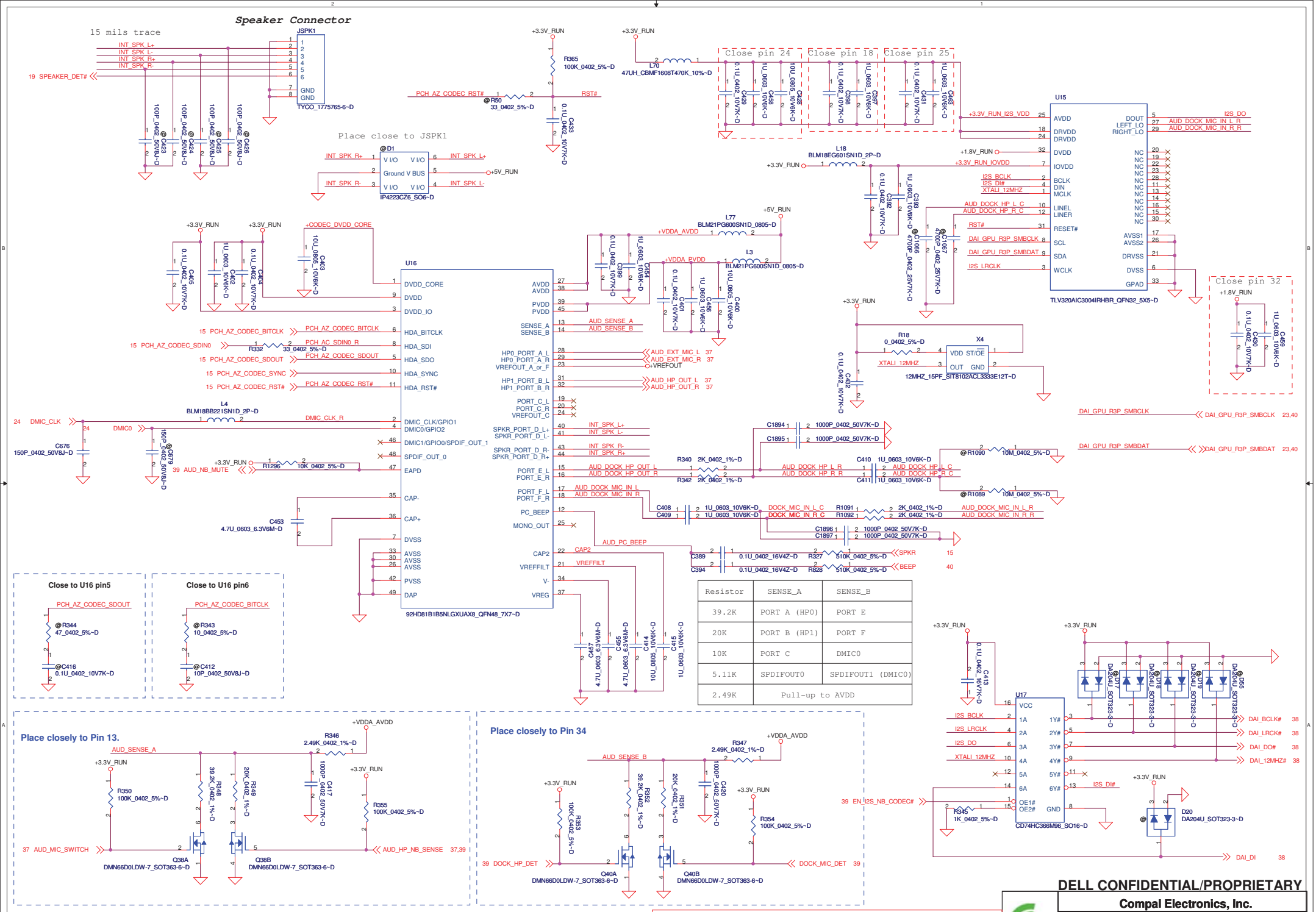

Resistor	SENSE_A	SENSE_B
39.2K	PORT A (HP0)	PORT E
20K	PORT B (HP1)	PORT F
10K	PORT C	DMIC0
5.11K	SPDIFOUT0	SPDIFOUT1 (DMIC0)
2.49K	Pull-up to AVDD	

PROPRIETARY NOTE: THIS SHEET OF ENGINEERING DRAWING AND SPECIFICATIONS CONTAINS CONFIDENTIAL TRADE SECRET AND OTHER PROPRIETARY INFORMATION OF DELL INC. ("DELL") THIS DOCUMENT MAY NOT BE TRANSFERRED OR COPIED WITHOUT THE EXPRESS WRITTEN AUTHORIZATION OF DELL. IN ADDITION, NEITHER THIS SHEET NOR THE INFORMATION IT CONTAINS MAY BE USED BY OR DISCLOSED TO ANY THIRD PARTY WITHOUT DELL'S EXPRESS WRITTEN CONSENT.

DELL CONFIDENTIAL/PROPRIETARY

Compal Electronics, Inc.

Title: Azalia (HD) Codec

Size: | Document Number: LA-5571P | Rev: 0.1

Date: Thursday, January 21, 2010 | Sheet 29 of 60

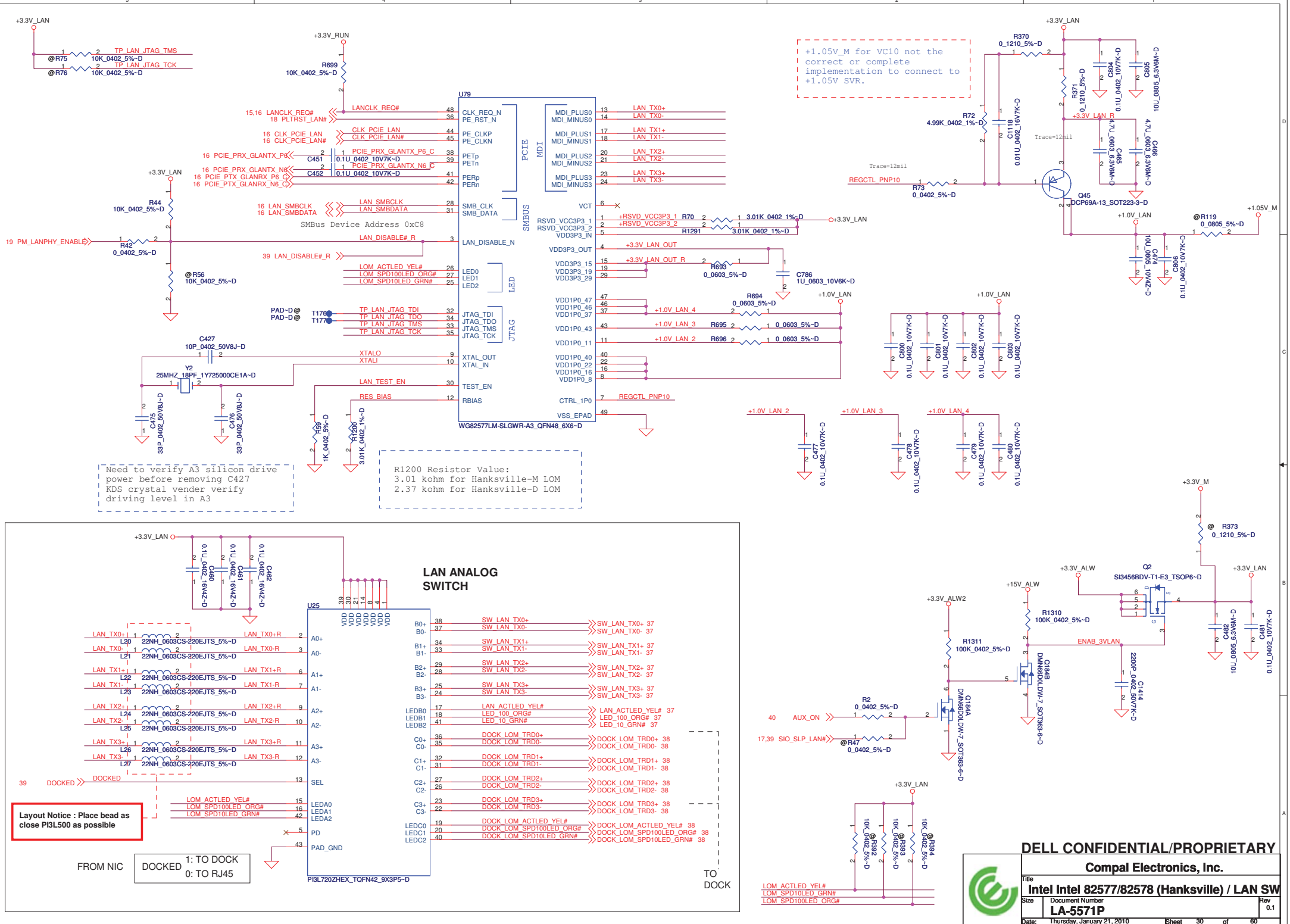
U79
WG82577LM-SLGWR-A3_QFN48_6X6~D
PCIE
MDI
SMBUS
LED
JTAG
SMBus Device Address 0xC8
+1.05V_M for VC10 not the correct or complete implementation to connect to +1.05V SVR.
Need to verify A3 silicon drive power before removing C427 KDS crystal vender verify driving level in A3
R1200 Resistor Value:
3.01 kohm for Hanksville-M LOM
2.37 kohm for Hanksville-D LOM
LAN ANALOG SWITCH
U25
PI3L720ZHEX_TQFN42_9X3P5~D
Layout Notice : Place bead as close PI3L500 as possible
FROM NIC
DOCKED 1: TO DOCK 0: TO RJ45
TO DOCK
Q2 SI3456BDV-T1-E3_TSOP6~D
Q45 DCP69A-13_SOT223-3~D
Q184A DMN6630LDW-7_SOT363-6~D
Q184B DMN6630LDW-7_SOT363-6~D
DELL CONFIDENTIAL/PROPRIETARY
Compal Electronics, Inc.
Title
Intel Intel 82577/82578 (Hanksville) / LAN SW
Size
Document Number
LA-5571P
Rev 0.1
Date: Thursday, January 21, 2010
Sheet 30 of 60

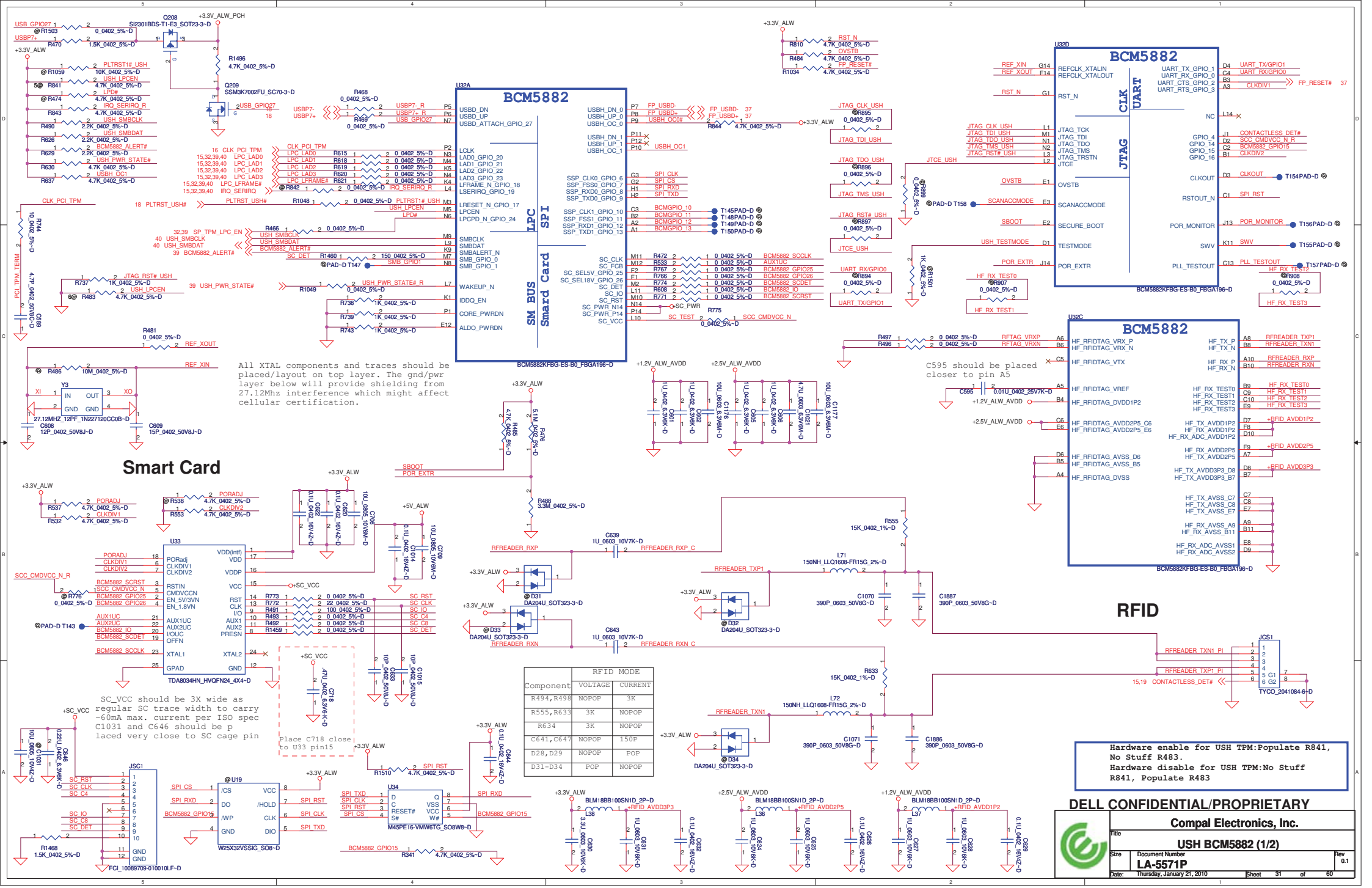

Component	RFID MODE	
	VOLTAGE	CURRENT
R494,R498	NOPOP	3K
R555,R633	3K	NOPOP
R634	3K	NOPOP
C641,C647	NOPOP	150P
D28,D29	NOPOP	POP
D31-D34	POP	NOPOP

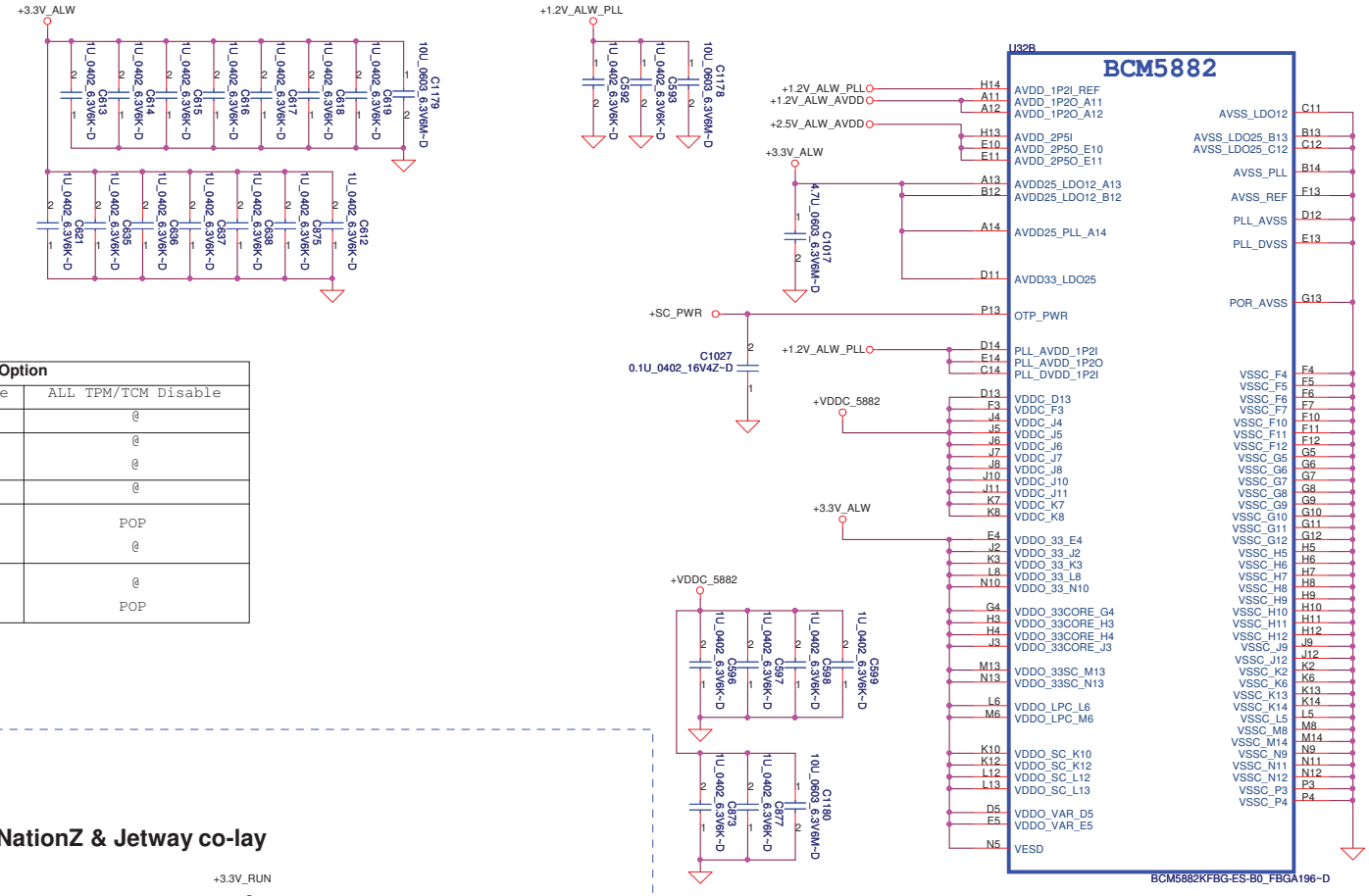

USH BCM5882 and China TCM Z8H172T Option				
PART/PIN	Ref Des	TCM Enable	TPM Enable	ALL TPM/TCM Disable
TCM circuit	All 3@	POP	@	@
USH_LPCEN	PU R841	@	POP	@
	PD R483	POP	@	@
SIO 5028 ->SP_TPM_LPC_EN	PU R788	@	@	@
PCH GPIO39 ->TPM_ID1	PU R787	@	@	POP
	PD R339	POP	POP	@
PCH GPIO38 ->TPM_ID0	PU R273	POP	POP	@
	PD R922	@	@	POP

LOW:Power Down Mode
High:Working Mode

China TCM: NationZ & Jetway co-lay

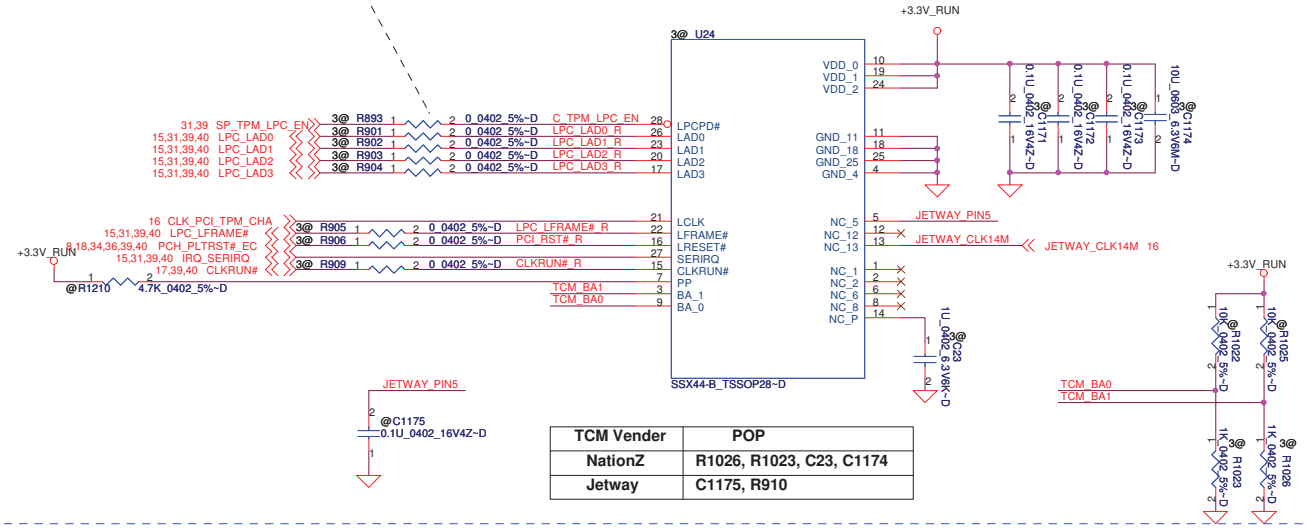

TCM Vender	POP
NationZ	R1026, R1023, C23, C1174
Jetway	C1175, R910

PROPRIETARY NOTE: THIS SHEET OF ENGINEERING DRAWING AND SPECIFICATIONS CONTAINS CONFIDENTIAL TRADE SECRET AND OTHER PROPRIETARY INFORMATION OF DELL INC. ("DELL") THIS DOCUMENT MAY NOT BE TRANSFERRED OR COPIED WITHOUT THE EXPRESS WRITTEN AUTHORIZATION OF DELL. IN ADDITION, NEITHER THIS SHEET NOR THE INFORMATION IT CONTAINS WAY BE USED BY OR DISCLOSED TO ANY THIRD PARTY WITHOUT DELL'S EXPRESS WRITTEN CONSENT.

DELL CONFIDENTIAL/PROPRIETARY

Compal Electronics, Inc.

Title: USH BCM5882 (2/2)

Size | Document Number: LA-5571P | Rev: 0.1

Date: Thursday, January 21, 2010 | Sheet 32 of 60

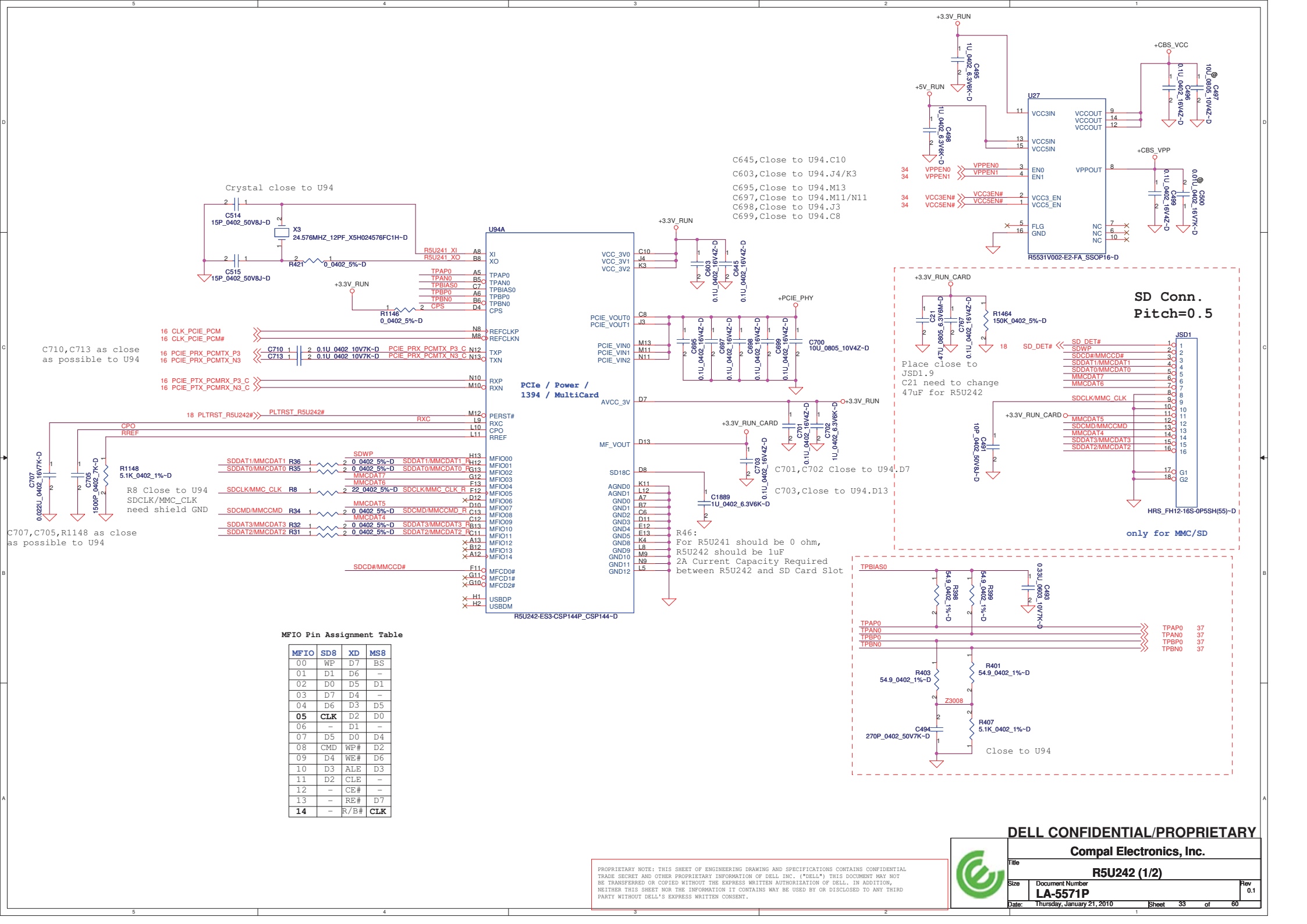

MFIO Pin Assignment Table

MFIO	SD8	XD	MS8
00	WP	D7	BS
01	D1	D6	–
02	D0	D5	D1
03	D7	D4	–
04	D6	D3	D5
05	**CLK**	D2	D0
06	–	D1	–
07	D5	D0	D4
08	CMD	WP#	D2
09	D4	WE#	D6
10	D3	ALE	D3
11	D2	CLE	–
12	–	CE#	–
13	–	RE#	D7
14	–	R/B#	**CLK**

PROPRIETARY NOTE: THIS SHEET OF ENGINEERING DRAWING AND SPECIFICATIONS CONTAINS CONFIDENTIAL TRADE SECRET AND OTHER PROPRIETARY INFORMATION OF DELL INC. ("DELL") THIS DOCUMENT MAY NOT BE TRANSFERRED OR COPIED WITHOUT THE EXPRESS WRITTEN AUTHORIZATION OF DELL. IN ADDITION, NEITHER THIS SHEET NOR THE INFORMATION IT CONTAINS WAY BE USED BY OR DISCLOSED TO ANY THIRD PARTY WITHOUT DELL'S EXPRESS WRITTEN CONSENT.

DELL CONFIDENTIAL/PROPRIETARY

Compal Electronics, Inc.

Title: R5U242 (1/2)

Size | Document Number: LA-5571P | Rev: 0.1

Date: Thursday, January 21, 2010 | Sheet 33 of 60

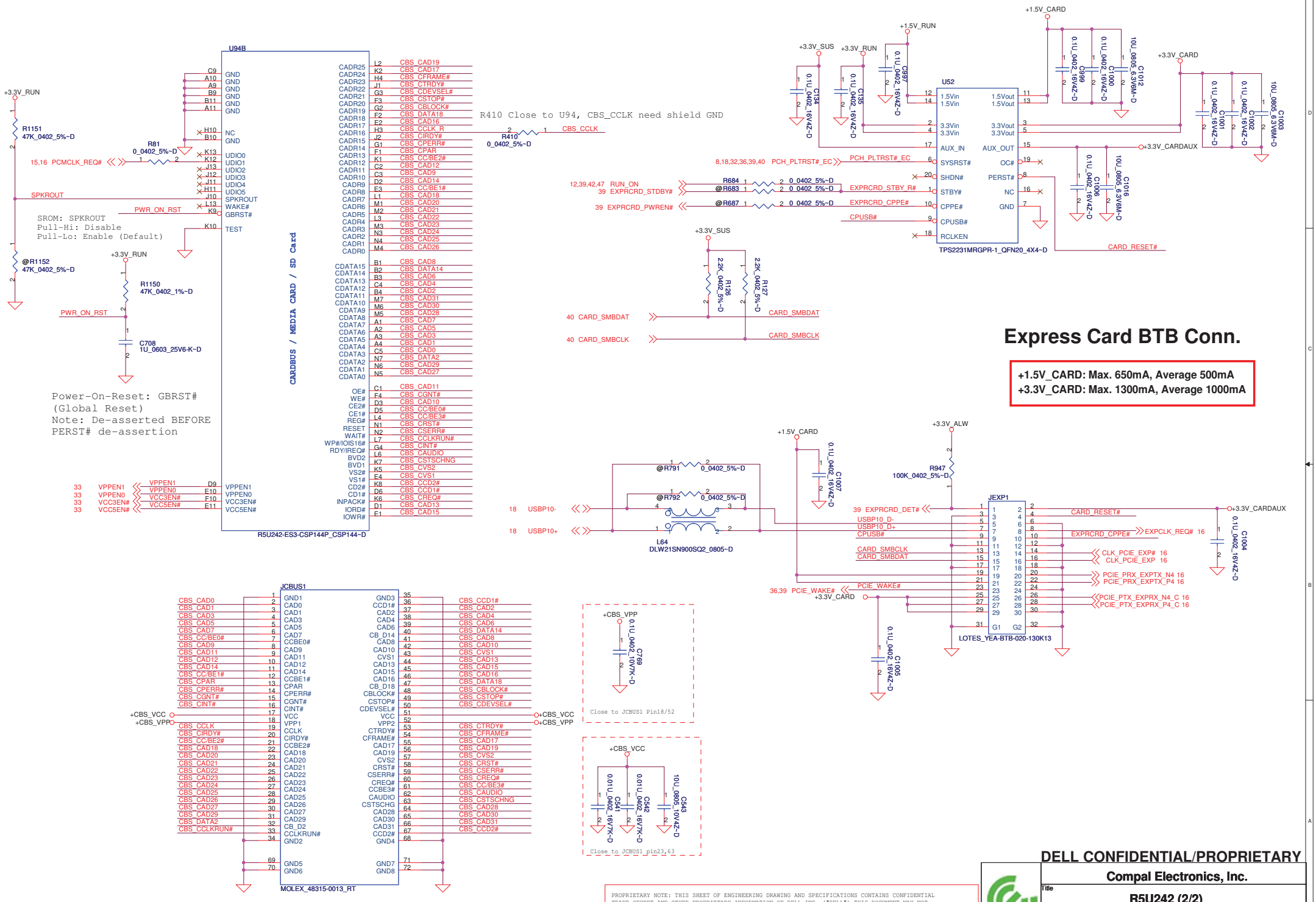

Express Card BTB Conn.

+1.5V_CARD: Max. 650mA, Average 500mA
+3.3V_CARD: Max. 1300mA, Average 1000mA

PROPRIETARY NOTE: THIS SHEET OF ENGINEERING DRAWING AND SPECIFICATIONS CONTAINS CONFIDENTIAL TRADE SECRET AND OTHER PROPRIETARY INFORMATION OF DELL INC. ("DELL") THIS DOCUMENT MAY NOT BE TRANSFERRED OR COPIED WITHOUT THE EXPRESS WRITTEN AUTHORIZATION OF DELL. IN ADDITION, NEITHER THIS SHEET NOR THE INFORMATION IT CONTAINS WAY BE USED BY OR DISCLOSED TO ANY THIRD PARTY WITHOUT DELL'S EXPRESS WRITTEN CONSENT.

DELL CONFIDENTIAL/PROPRIETARY

Compal Electronics, Inc.

Title	R5U242 (2/2)
Size	
Document Number	LA-5571P
Rev	0.1
Date:	Thursday, January 21, 2010
Sheet	34 of 60

Power Control for Mini card1

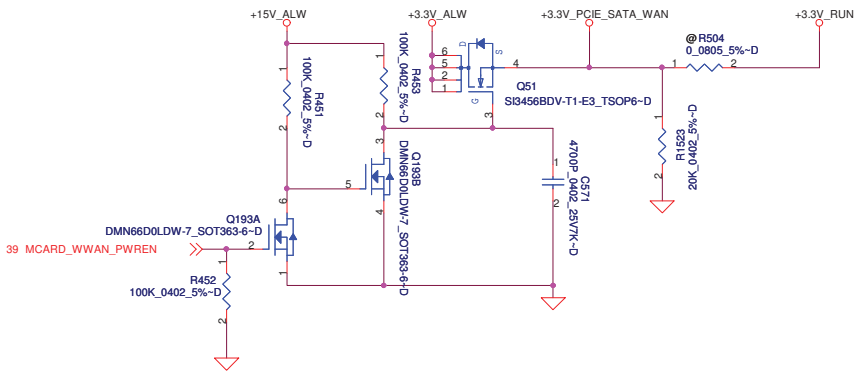

Power Control for Mini card2

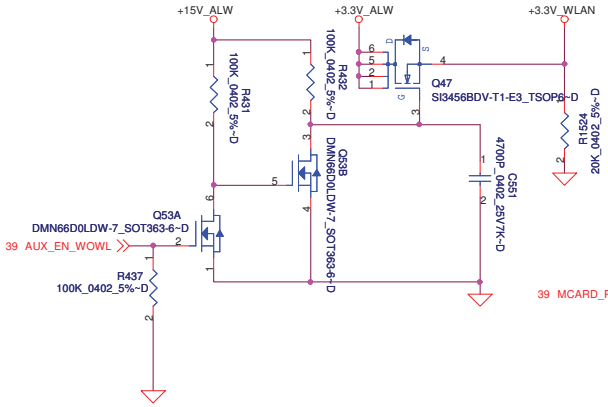

Power Control for Mini card3

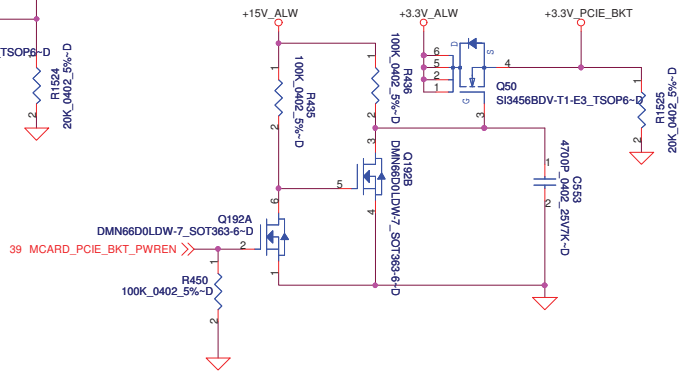

PROPRIETARY NOTE: THIS SHEET OF ENGINEERING DRAWING AND SPECIFICATIONS CONTAINS CONFIDENTIAL TRADE SECRET AND OTHER PROPRIETARY INFORMATION OF DELL INC. ("DELL") THIS DOCUMENT MAY NOT BE TRANSFERRED OR COPIED WITHOUT THE EXPRESS WRITTEN AUTHORIZATION OF DELL. IN ADDITION, NEITHER THIS SHEET NOR THE INFORMATION IT CONTAINS WAY BE USED BY OR DISCLOSED TO ANY THIRD PARTY WITHOUT DELL'S EXPRESS WRITTEN CONSENT.

DELL CONFIDENTIAL/PROPRIETARY

Compal Electronics, Inc.

Title	PCIE PWR	
Size	Document Number: LA-5571P	Rev 0.1
Date: Thursday, January 21, 2010	Sheet 35 of 60	

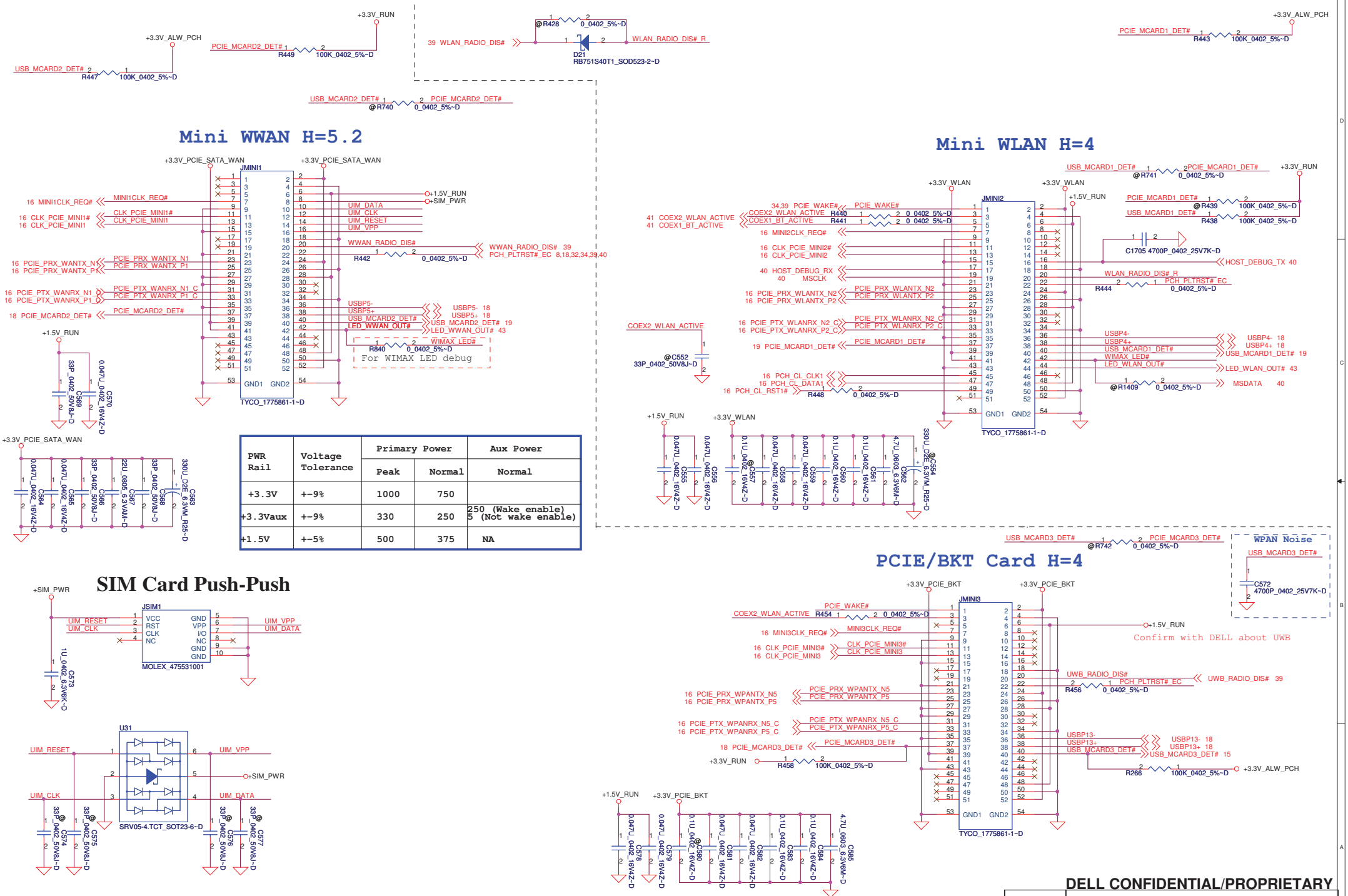

PWR Rail	Voltage Tolerance	Primary Power		Aux Power
		Peak	Normal	Normal
+3.3V	+-9%	1000	750	
+3.3Vaux	+-9%	330	250	250 (Wake enable) 5 (Not wake enable)
+1.5V	+-5%	500	375	NA

PROPRIETARY NOTE: THIS SHEET OF ENGINEERING DRAWING AND SPECIFICATIONS CONTAINS CONFIDENTIAL TRADE SECRET AND OTHER PROPRIETARY INFORMATION OF DELL INC. ("DELL") THIS DOCUMENT MAY NOT BE TRANSFERRED OR COPIED WITHOUT THE EXPRESS WRITTEN AUTHORIZATION OF DELL. IN ADDITION, NEITHER THIS SHEET NOR THE INFORMATION IT CONTAINS WAY BE USED BY OR DISCLOSED TO ANY THIRD PARTY WITHOUT DELL'S EXPRESS WRITTEN CONSENT.

DELL CONFIDENTIAL/PROPRIETARY

Compal Electronics, Inc.

Title: Mini Card

Size | Document Number: LA-5571P | Rev: 0.1

Date: Thursday, January 21, 2010 | Sheet 36 of 60

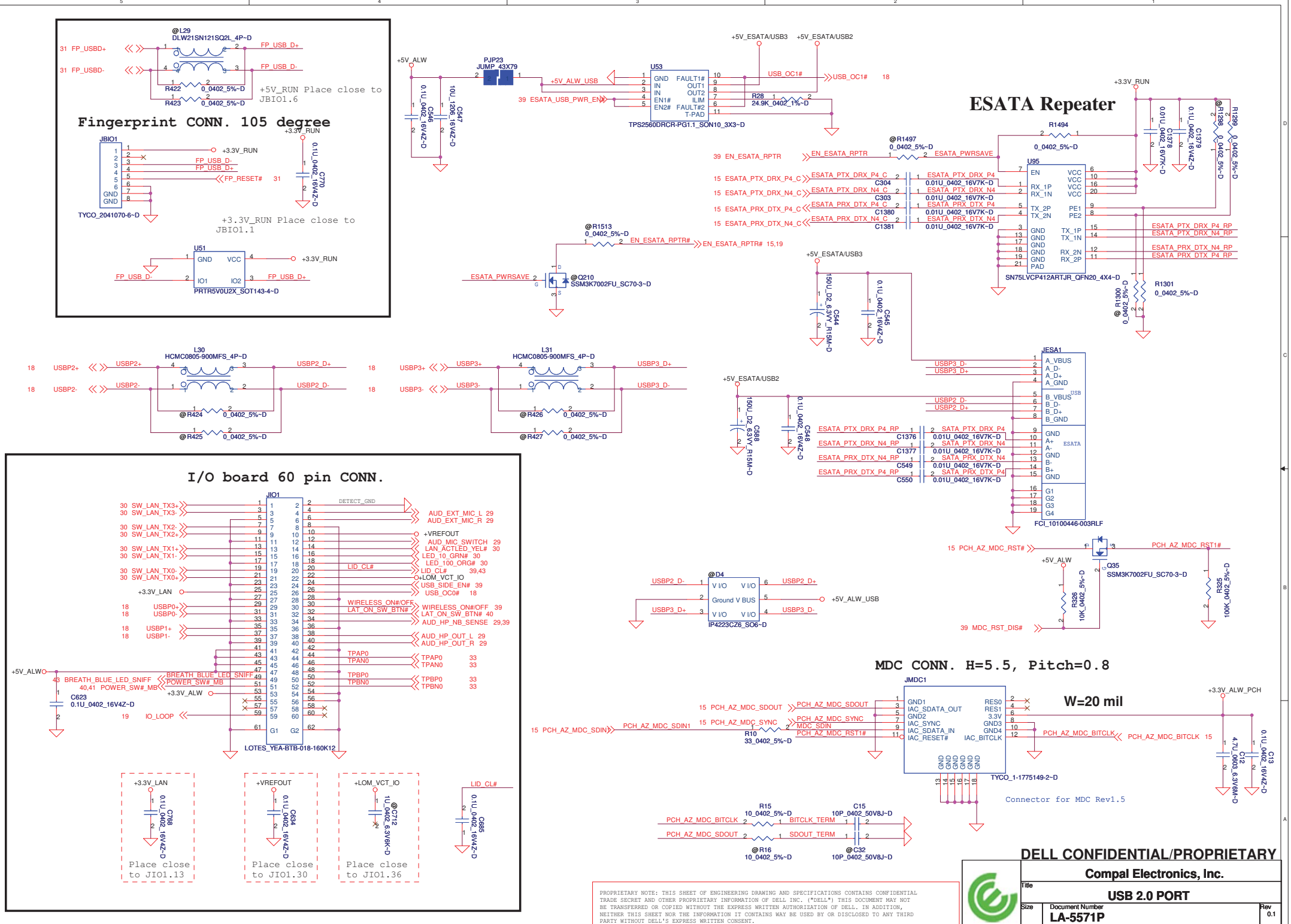

PROPRIETARY NOTE: THIS SHEET OF ENGINEERING DRAWING AND SPECIFICATIONS CONTAINS CONFIDENTIAL TRADE SECRET AND OTHER PROPRIETARY INFORMATION OF DELL INC. ("DELL") THIS DOCUMENT MAY NOT BE TRANSFERRED OR COPIED WITHOUT THE EXPRESS WRITTEN AUTHORIZATION OF DELL. IN ADDITION, NEITHER THIS SHEET NOR THE INFORMATION IT CONTAINS WAY BE USED BY OR DISCLOSED TO ANY THIRD PARTY WITHOUT DELL'S EXPRESS WRITTEN CONSENT.

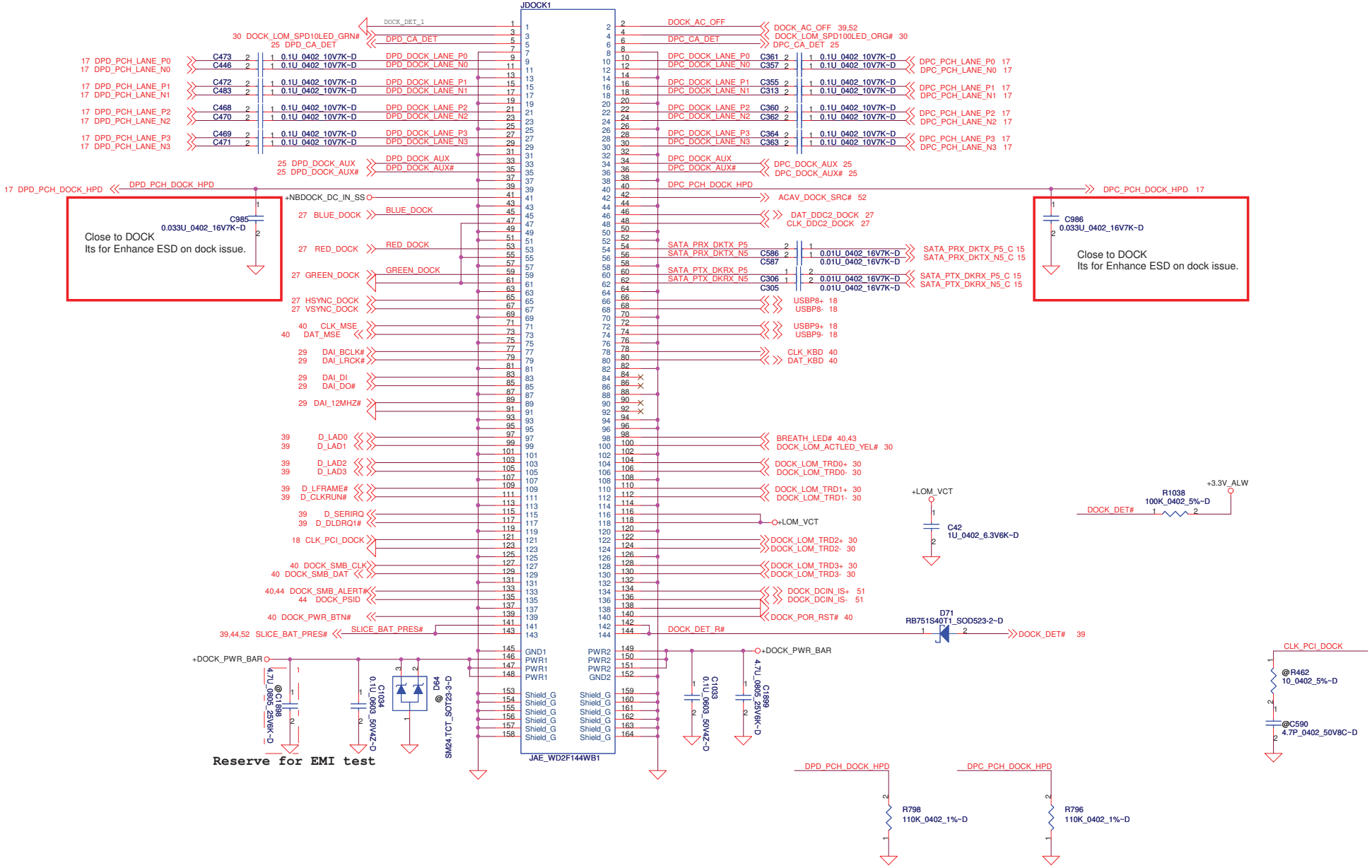

PROPRIETARY NOTE: THIS SHEET OF ENGINEERING DRAWING AND SPECIFICATIONS CONTAINS CONFIDENTIAL TRADE SECRET AND OTHER PROPRIETARY INFORMATION OF DELL INC. ("DELL") THIS DOCUMENT MAY NOT BE TRANSFERRED OR COPIED WITHOUT THE EXPRESS WRITTEN AUTHORIZATION OF DELL. IN ADDITION, NEITHER THIS SHEET NOR THE INFORMATION IT CONTAINS WAY BE USED BY OR DISCLOSED TO ANY THIRD PARTY WITHOUT DELL'S EXPRESS WRITTEN CONSENT.

Compal Electronics, Inc.	
Title	DOCKING CONN
Size	Document Number: LA-5571P
Rev	0.1
Date: Thursday, January 21, 2010	Sheet 38 of 60

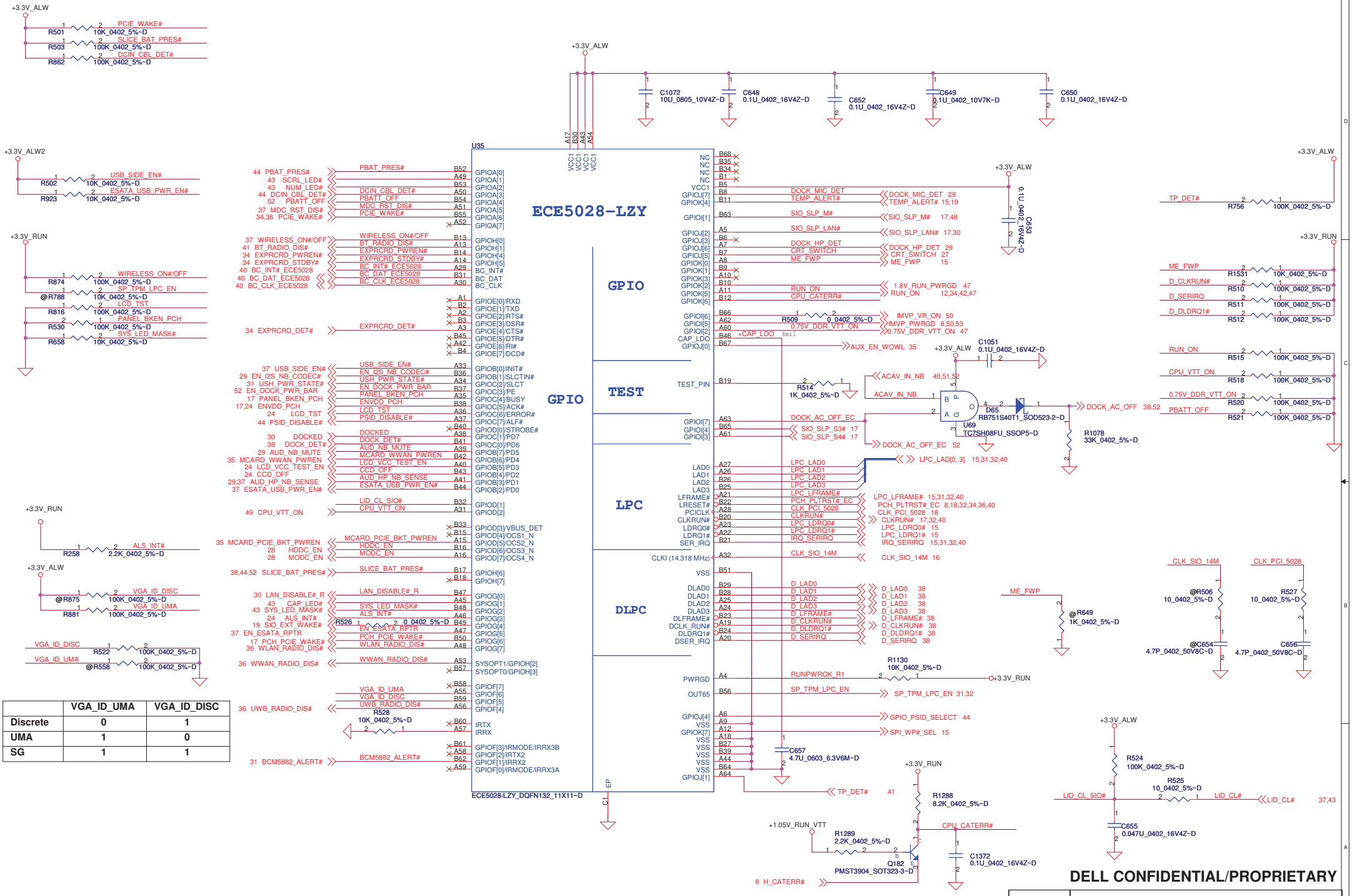

	VGA_ID_UMA	VGA_ID_DISC
Discrete	0	1
UMA	1	0
SG	1	1

PROPRIETARY NOTE: THIS SHEET OF ENGINEERING DRAWING AND SPECIFICATIONS CONTAINS CONFIDENTIAL TRADE SECRET AND OTHER PROPRIETARY INFORMATION OF DELL INC. ("DELL") THIS DOCUMENT MAY NOT BE TRANSFERRED OR COPIED WITHOUT THE EXPRESS WRITTEN AUTHORIZATION OF DELL. IN ADDITION, NEITHER THIS SHEET NOR THE INFORMATION IT CONTAINS WAY BE USED BY OR DISCLOSED TO ANY THIRD PARTY WITHOUT DELL'S EXPRESS WRITTEN CONSENT.

Compal Electronics, Inc.

Title: ECE5028

Size | Document Number: LA-5571P | Rev: 0.1

Date: Thursday, January 21, 2010 | Sheet 39 of 60

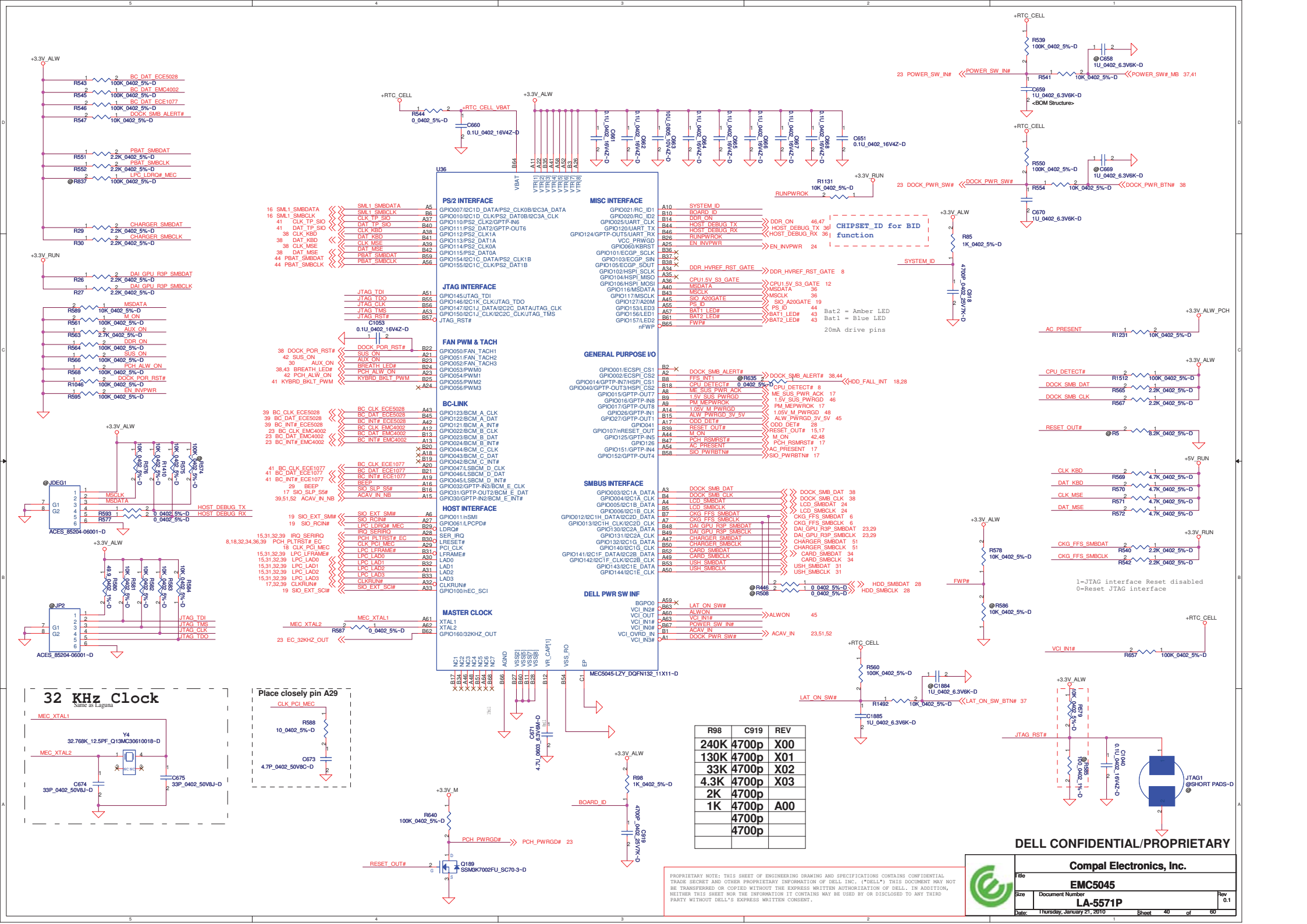

R98	C919	REV
240K	4700p	X00
130K	4700p	X01
33K	4700p	X02
4.3K	4700p	X03
2K	4700p	
1K	4700p	A00
	4700p	
	4700p	

PROPRIETARY NOTE: THIS SHEET OF ENGINEERING DRAWING AND SPECIFICATIONS CONTAINS CONFIDENTIAL TRADE SECRET AND OTHER PROPRIETARY INFORMATION OF DELL INC. ("DELL") THIS DOCUMENT MAY NOT BE TRANSFERRED OR COPIED WITHOUT THE EXPRESS WRITTEN AUTHORIZATION OF DELL. IN ADDITION, NEITHER THIS SHEET NOR THE INFORMATION IT CONTAINS MAY BE USED BY OR DISCLOSED TO ANY THIRD PARTY WITHOUT DELL'S EXPRESS WRITTEN CONSENT.

DELL CONFIDENTIAL/PROPRIETARY

Compal Electronics, Inc.

Title: EMC5045

Size: | Document Number: LA-5571P | Rev: 0.1

Date: Thursday, January 21, 2010 | Sheet 40 of 60

Touch Pad

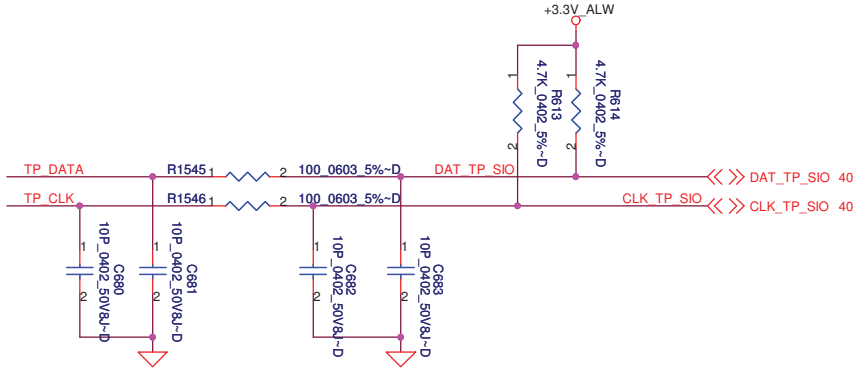

BlueTooth

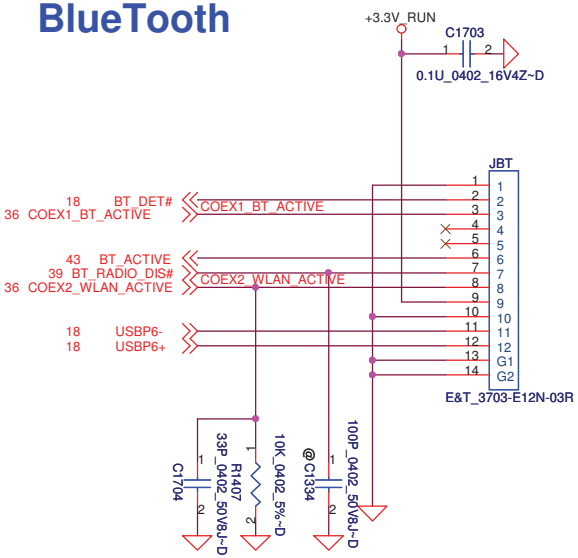

Touch Pad Conn. Pitch=0.5

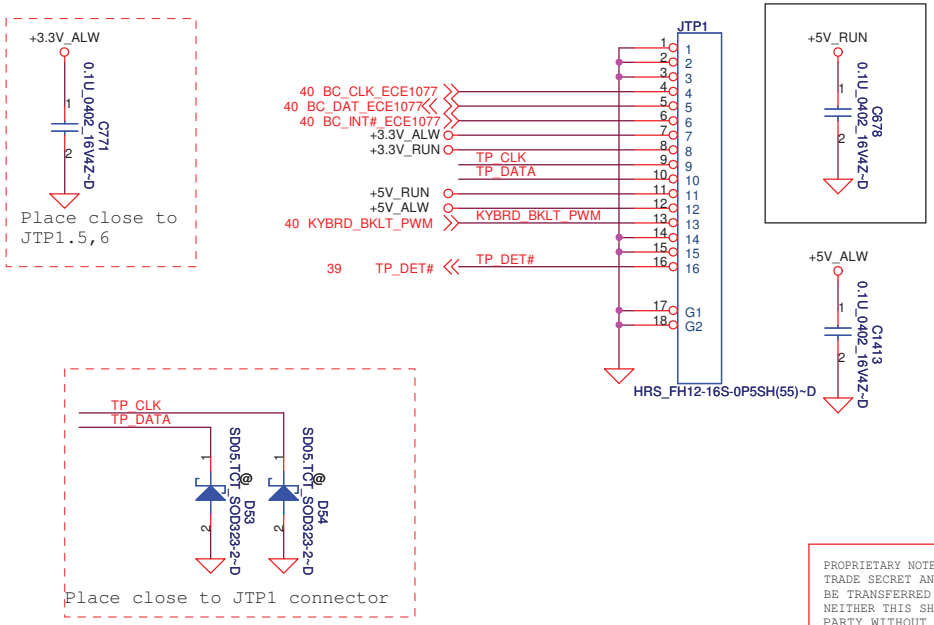

Power Switch for debug

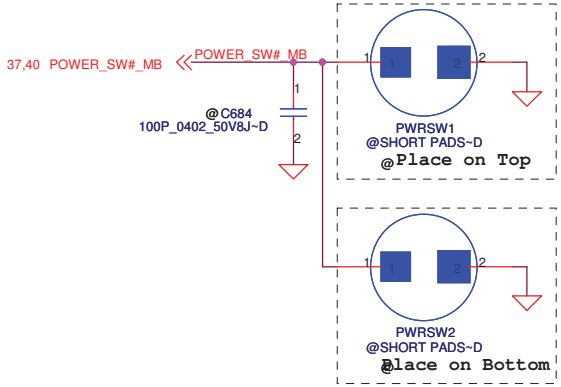

@FAN

Part Number	Description
DC28A000800	FAN SET DAQ20 DC5V AB7405HB-HB3 ADDA

@Speak

Part Number	Description
PK230003Q0L	SPK PACK ZJX 2.0W 4 OHM FG

@SM CARD BODY

Part Number	Description
SP070007V0L	S SOCKET TYCO 1770551-1 10P H5.9 SMART

@PCMCIA BODY

Part Number	Description
DC000001Q0L	PCMCIA TYCO 1759096-1

@MDC wire set cable

Part Number	Description
DC02000CS0L	H-CONN SET ZGX MB-MDC

@T/P wire set cable

Part Number	Description
DC02000840L	H-CONN SET ZJX MB-B/T-TP-FP

@LVDS cable

Part Number	Description
DC020003Y0L	H-CONN SET ZJX MB-LCD 14 WXGA+(-1ch)

@LVDS cable

Part Number	Description
DC02000870L	H-CONN SET ZJX MB-LCD 14 WXGA+(-2ch)

@RTC BATT

Part Number	Description
GC20323MX00	BATT CR2032 3V 220MAH MAXELL

PROPRIETARY NOTE: THIS SHEET OF ENGINEERING DRAWING AND SPECIFICATIONS CONTAINS CONFIDENTIAL TRADE SECRET AND OTHER PROPRIETARY INFORMATION OF DELL INC. ("DELL") THIS DOCUMENT MAY NOT BE TRANSFERRED OR COPIED WITHOUT THE EXPRESS WRITTEN AUTHORIZATION OF DELL. IN ADDITION, NEITHER THIS SHEET NOR THE INFORMATION IT CONTAINS WAY BE USED BY OR DISCLOSED TO ANY THIRD PARTY WITHOUT DELL'S EXPRESS WRITTEN CONSENT.

DELL CONFIDENTIAL/PROPRIETARY

Compal Electronics, Inc.

Title: Touch PAD/Int KB/LID

Size | Document Number: LA-5571P | Rev: 0.1

Date: Thursday, January 21, 2010 | Sheet 41 of 60

DC/DC Interface

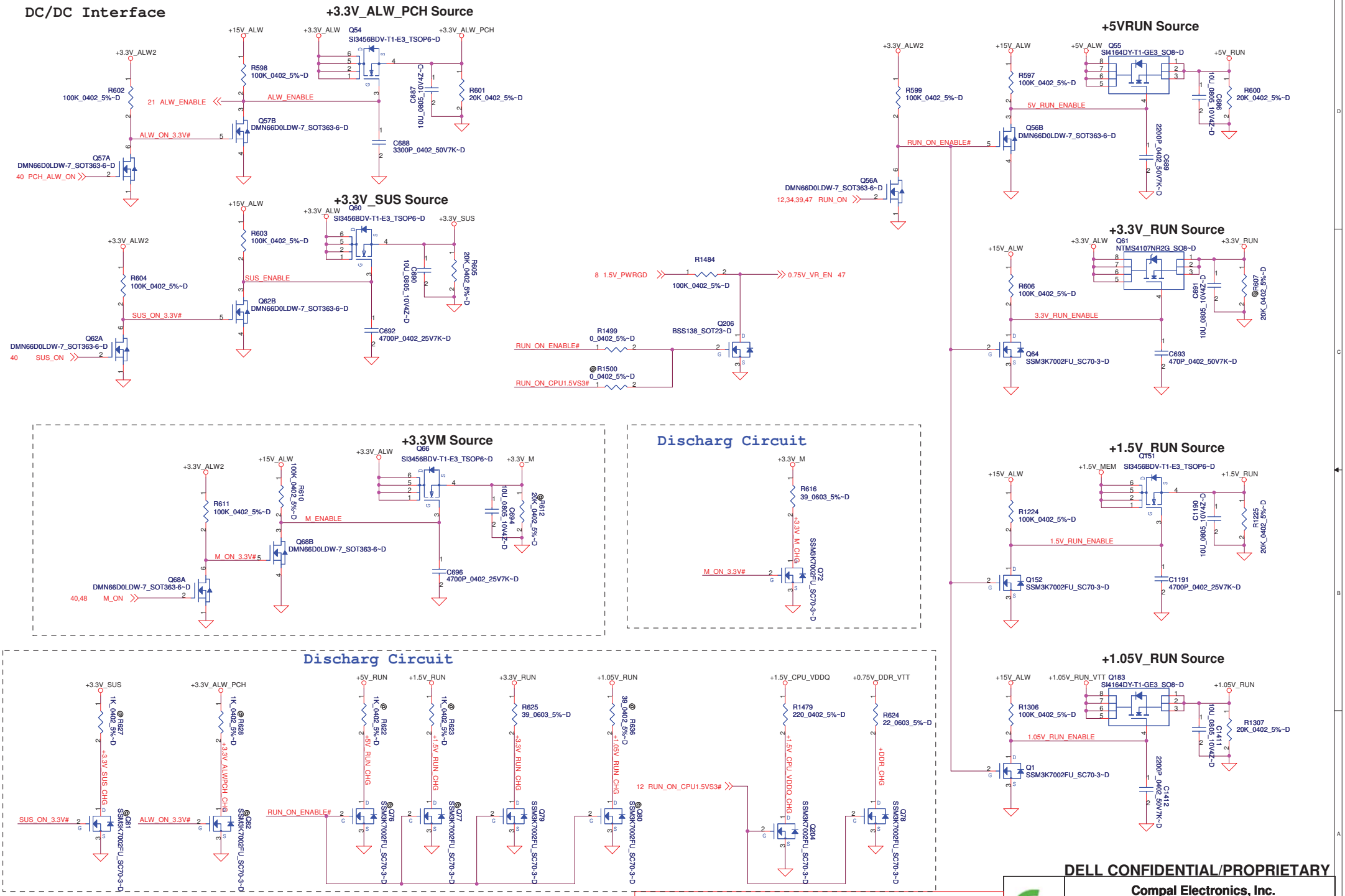

PROPRIETARY NOTE: THIS SHEET OF ENGINEERING DRAWING AND SPECIFICATIONS CONTAINS CONFIDENTIAL TRADE SECRET AND OTHER PROPRIETARY INFORMATION OF DELL INC. ("DELL") THIS DOCUMENT MAY NOT BE TRANSFERRED OR COPIED WITHOUT THE EXPRESS WRITTEN AUTHORIZATION OF DELL. IN ADDITION, NEITHER THIS SHEET NOR THE INFORMATION IT CONTAINS MAY BE USED BY OR DISCLOSED TO ANY THIRD PARTY WITHOUT DELL'S EXPRESS WRITTEN CONSENT.

DELL CONFIDENTIAL/PROPRIETARY

Compal Electronics, Inc.

Title: POWER CONTROL

Size | Document Number: LA-5571P | Rev: 0.1

Date: Thursday, January 21, 2010 | Sheet 42 of 60

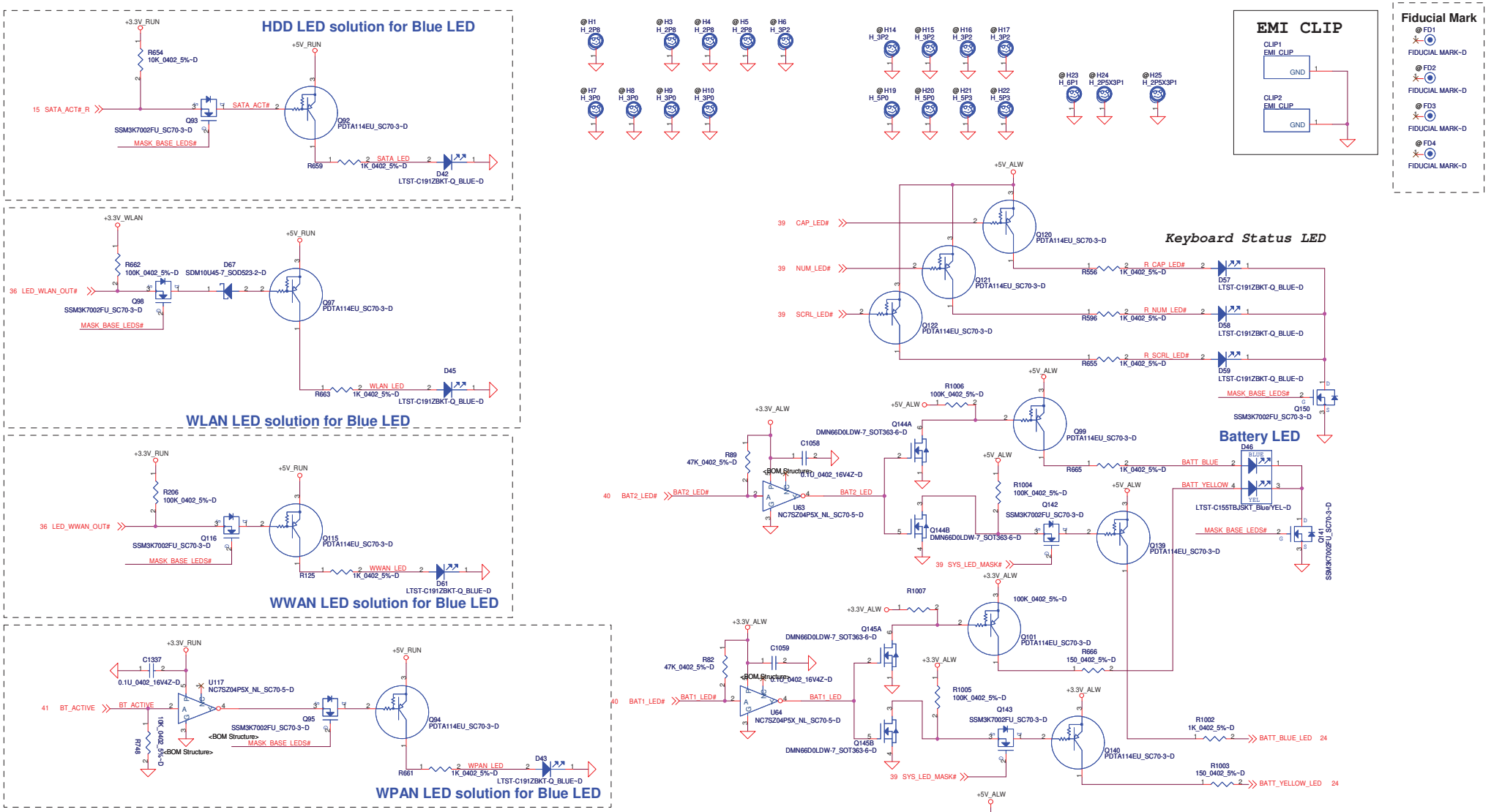

LED Circuit Control Table		
	SYS_LED_MASK#	LID_CL#
Mask All LEDs (Sniffer Function)	0	X
Mask Base MB LEDs (Lid Closed)	1	0
Do not Mask LEDs (Lid Opened)	1	1

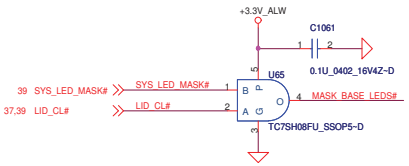

PROPRIETARY NOTE: THIS SHEET OF ENGINEERING DRAWING AND SPECIFICATIONS CONTAINS CONFIDENTIAL TRADE SECRET AND OTHER PROPRIETARY INFORMATION OF DELL INC. ("DELL") THIS DOCUMENT MAY NOT BE TRANSFERRED OR COPIED WITHOUT THE EXPRESS WRITTEN AUTHORIZATION OF DELL. IN ADDITION, NEITHER THIS SHEET NOR THE INFORMATION IT CONTAINS WAY BE USED BY OR DISCLOSED TO ANY THIRD PARTY WITHOUT DELL'S EXPRESS WRITTEN CONSENT.

DELL CONFIDENTIAL/PROPRIETARY

Compal Electronics, Inc.

Title: PAD and Standoff

Size | Document Number: LA-5571P | Rev: 0.1

Date: Thursday, January 21, 2010 | Sheet 43 of 60

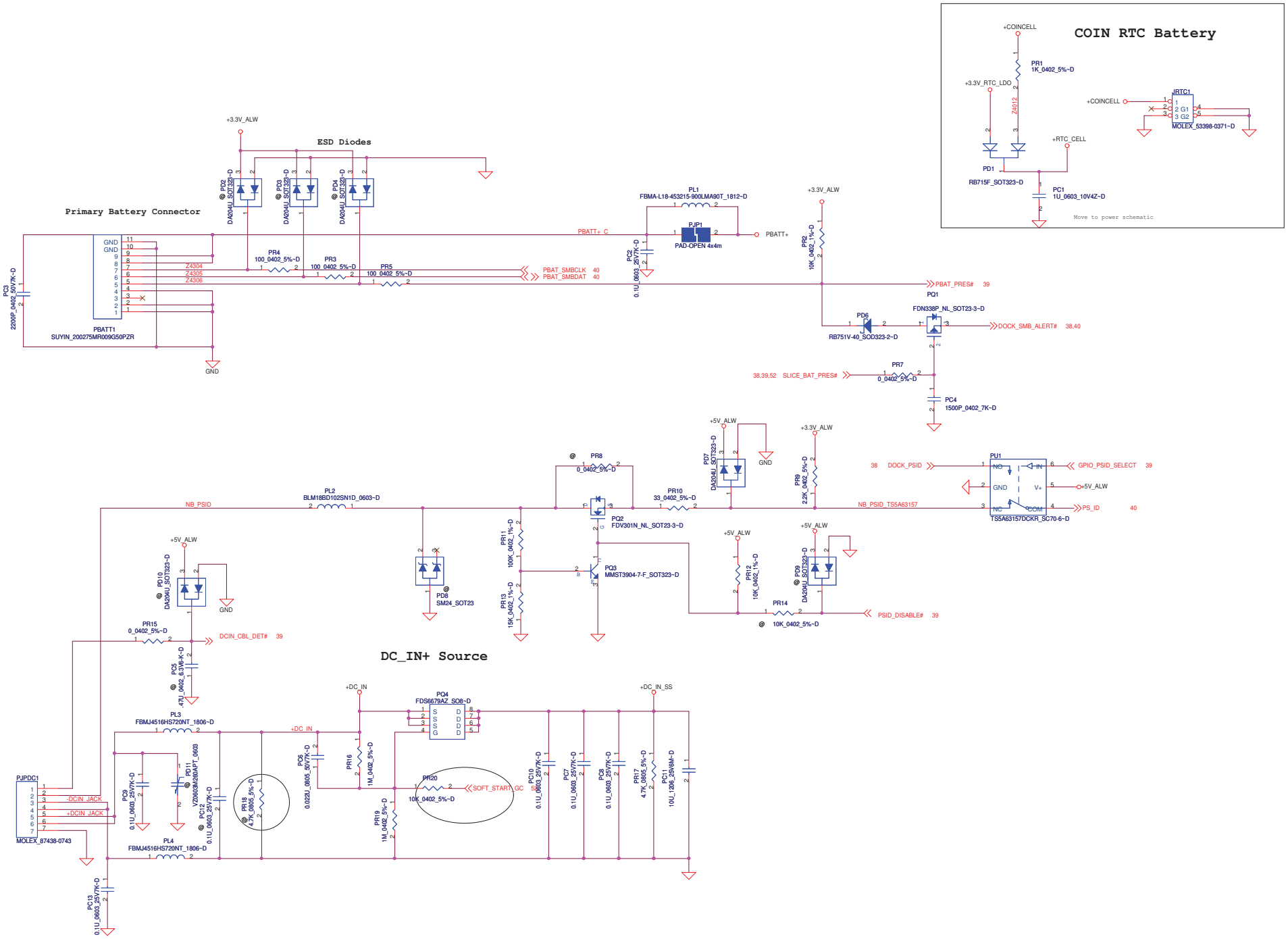

DELL CONFIDENTIAL/PROPRIETARY

THIS SHEET OF ENGINEERING DRAWING IS THE PROPRIETARY PROPERTY OF COMPAL ELECTRONICS, INC. AND CONTAINS CONFIDENTIAL AND TRADE SECRET INFORMATION. THIS SHEET MAY NOT BE TRANSFERED FROM THE CUSTODY OF THE COMPETENT DIVISION OF R&D DEPARTMENT EXCEPT AS AUTHORIZED BY COMPAL ELECTRONICS, INC. NEITHER THIS SHEET NOR THE INFORMATION IT CONTAINS MAY BE USED BY OR DISCLOSED TO ANY THIRD PARTY WITHOUT PRIOR WRITTEN CONSENT OF COMPAL ELECTRONICS, INC.

Compal Electronics, Inc.		
Title: +DCIN		
Size	Document Number: LA-5772P	Rev: 0.1
Date: Thursday, January 21, 2010	Sheet 44 of 60	

+3.3V_ALWP/ +5V_ALWP/ +5V_ALW2 / +15V_ALWP/ +3.3V_RTC_LDO

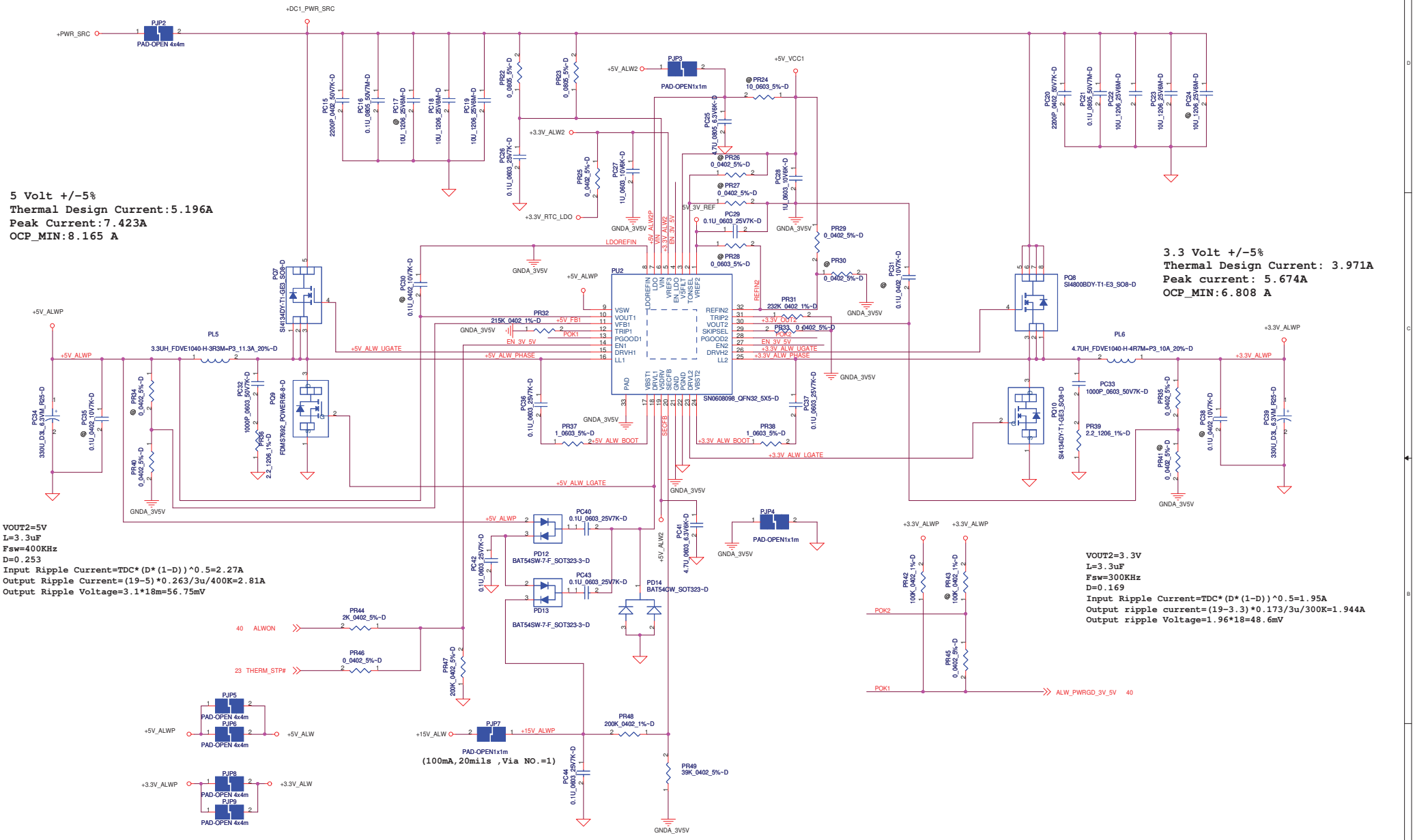

DELL CONFIDENTIAL/PROPRIETARY

THIS SHEET OF ENGINEERING DRAWING IS THE PROPRIETARY PROPERTY OF COMPAL ELECTRONICS, INC. AND CONTAINS CONFIDENTIAL AND TRADE SECRET INFORMATION. THIS SHEET MAY NOT BE TRANSFERED FROM THE CUSTODY OF THE COMPETENT DIVISION OF R&D DEPARTMENT EXCEPT AS AUTHORIZED BY COMPAL ELECTRONICS, INC. NEITHER THIS SHEET NOR THE INFORMATION IT CONTAINS

Compal Electronics, Inc.			
Title: DC/DC +3V/ +5V			
Size	Document Number: LA-5772P		Rev: 0.1
Date: Thursday, January 21, 2010	Sheet 45 of 60		

+1.5V_SUS_P(TPS51318)

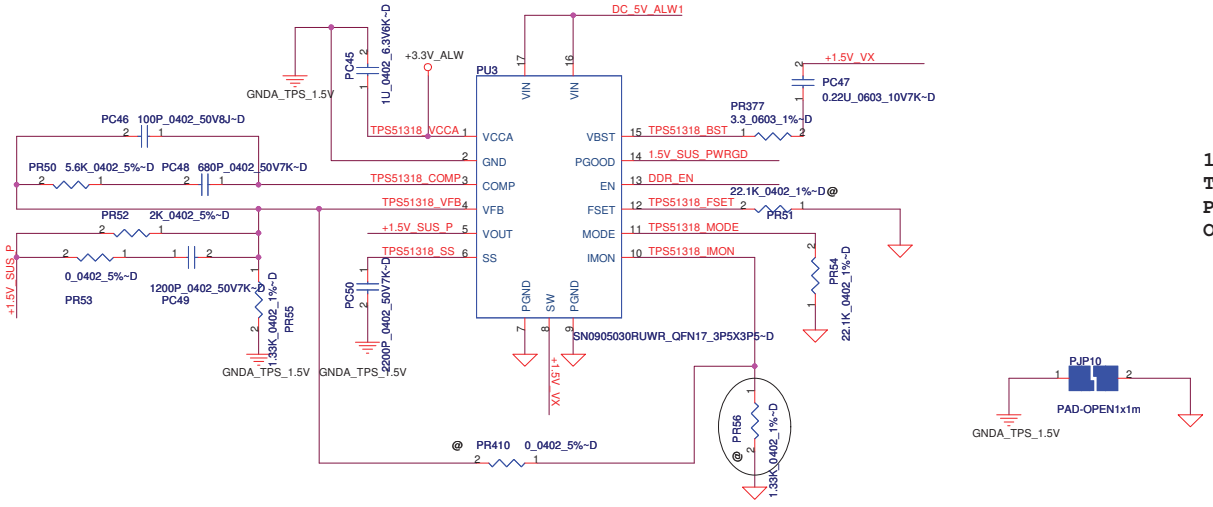

1.5 Volt +/-5%
Thermal Design Current: 7.876A
Peak current: 11.251A
OCP_MIN:12.376A

+1.5V_SUS_P(VT356)

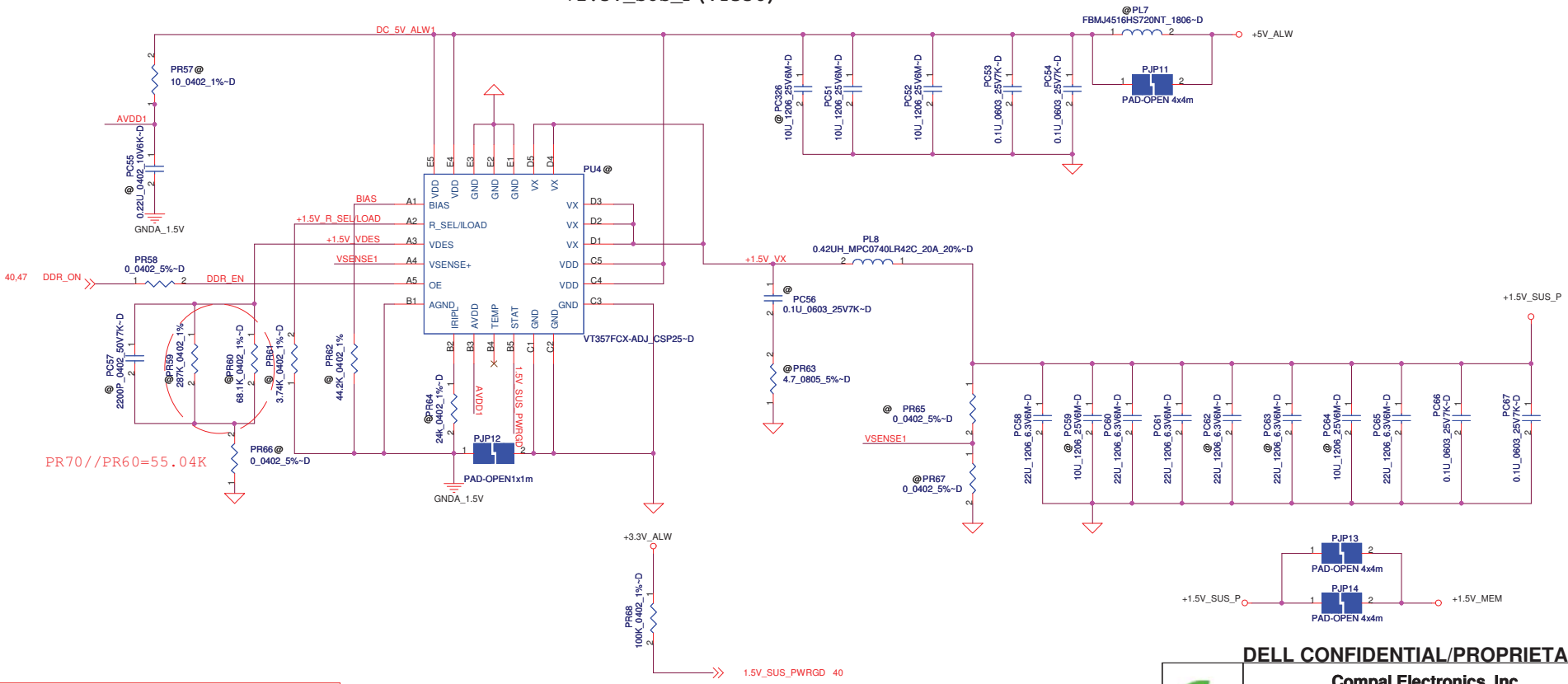

PROPRIETARY NOTE: THIS SHEET OF ENGINEERING DRAWING AND SPECIFICATIONS CONTAINS CONFIDENTIAL TRADE SECRET AND OTHER PROPRIETARY INFORMATION OF DELL INC. ("DELL") THIS DOCUMENT MAY NOT BE TRANSFERRED OR COPIED WITHOUT THE EXPRESS WRITTEN AUTHORIZATION OF DELL. IN ADDITION, NEITHER THIS SHEET NOR THE INFORMATION IT CONTAINS WAY BE USED BY OR DISCLOSED TO ANY THIRD PARTY WITHOUT DELL'S EXPRESS WRITTEN CONSENT.

THIS SHEET OF ENGINEERING DRAWING IS THE PROPRIETARY PROPERTY OF COMPAL ELECTRONICS, INC. AND CONTAINS CONFIDENTIAL AND TRADE SECRET INFORMATION. THIS SHEET MAY NOT BE TRANSFERED FROM THE CUSTODY OF THE COMPETENT DIVISION OF R&D DEPARTMENT EXCEPT AS AUTHORIZED BY COMPAL ELECTRONICS, INC. NEITHER THIS SHEET NOR THE INFORMATION IT CONTAINS

DELL CONFIDENTIAL/PROPRIETARY

Compal Electronics, Inc.			
Title: +1.5V_MEM			
Size	Document Number: LA-5772P		Rev 0.1
Date: Thursday, January 21, 2010	Sheet 46 of 60		

+1.8V_RUNP

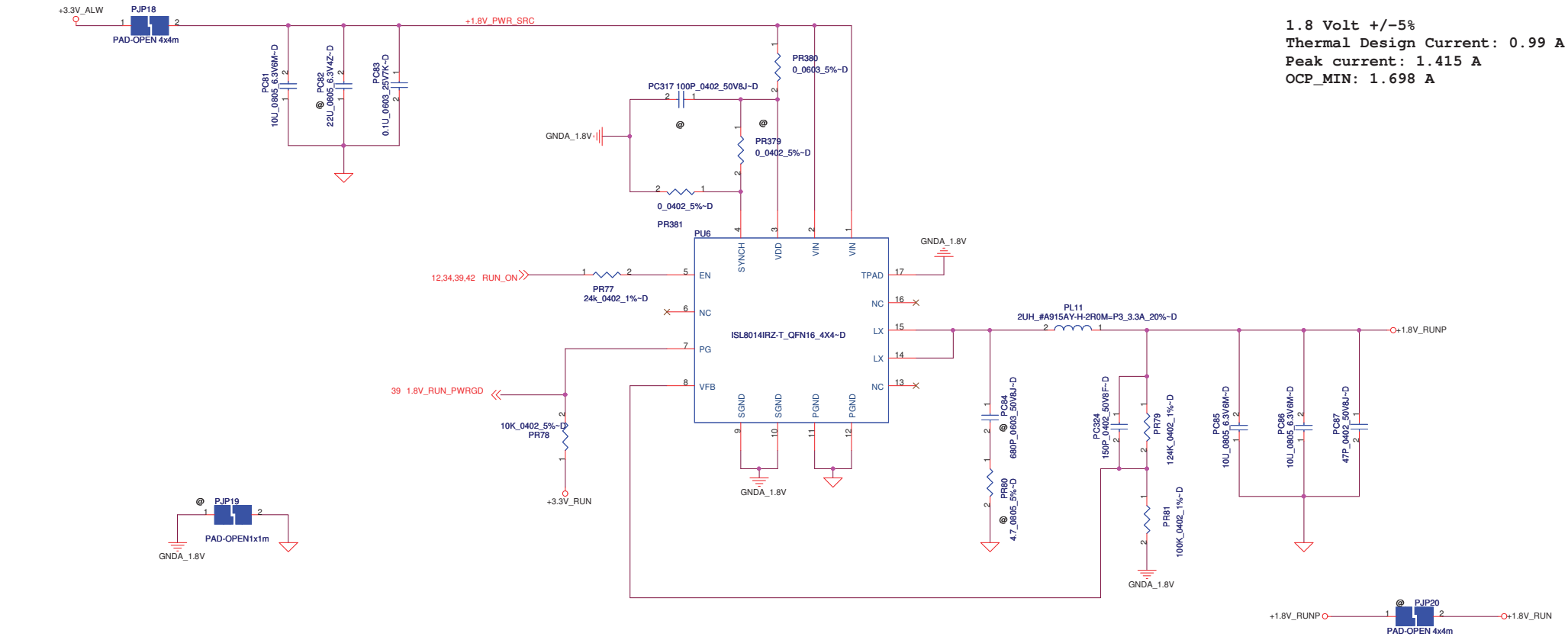

1.8 Volt +/-5%
Thermal Design Current: 0.99 A
Peak current: 1.415 A
OCP_MIN: 1.698 A

VOUT=1.8V
L=3.3uF
Fsw=290KHz
D=0.092
Input Ripple Current=TDC*(D*(1-D))^0.5=0.884A
Output Ripple Current=1.707A
Output Ripple Voltage=1.707*15m=20.5mV

+0.75V_DDR_VTT

DDR3 Termination

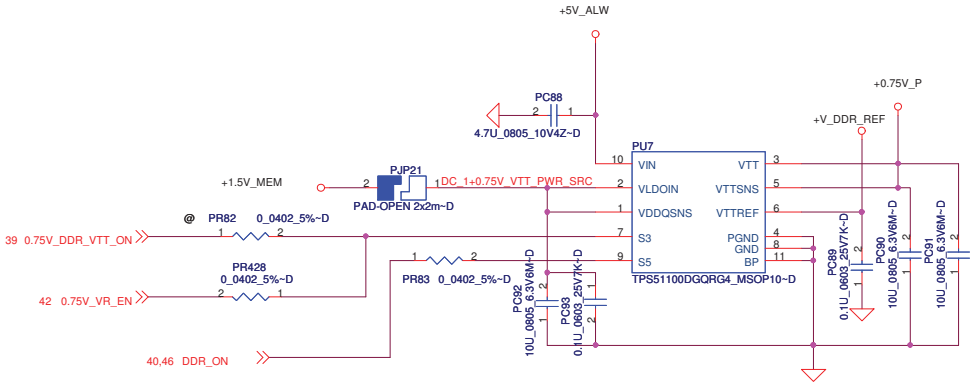

0.75Volt +/-5%
Thermal Design Current: 0.7A
Peak current: 1A

PROPRIETARY NOTE: THIS SHEET OF ENGINEERING DRAWING AND SPECIFICATIONS CONTAINS CONFIDENTIAL TRADE SECRET AND OTHER PROPRIETARY INFORMATION OF DELL INC. ("DELL") THIS DOCUMENT MAY NOT BE TRANSFERRED OR COPIED WITHOUT THE EXPRESS WRITTEN AUTHORIZATION OF DELL. IN ADDITION, NEITHER THIS SHEET NOR THE INFORMATION IT CONTAINS WAY BE USED BY OR DISCLOSED TO ANY THIRD PARTY WITHOUT DELL'S EXPRESS WRITTEN CONSENT.

+1.05V_M_P

1.05 Volt +/-5%
Thermal Design Current: 1.518A
Peack current: 2.169A
OCP_MIN: 4.3A

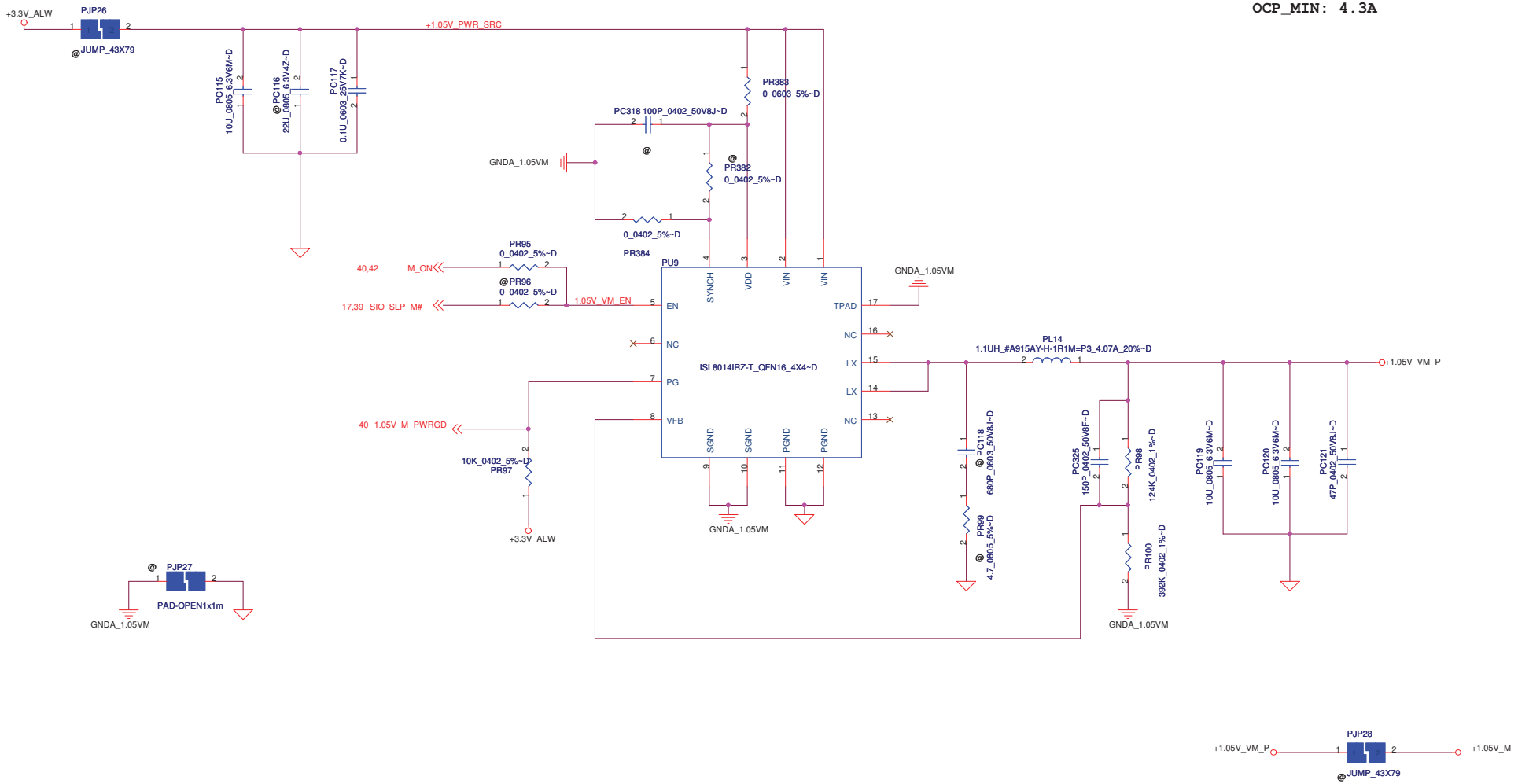

PROPRIETARY NOTE: THIS SHEET OF ENGINEERING DRAWING AND SPECIFICATIONS CONTAINS CONFIDENTIAL TRADE SECRET AND OTHER PROPRIETARY INFORMATION OF DELL INC. ("DELL") THIS DOCUMENT MAY NOT BE TRANSFERRED OR COPIED WITHOUT THE EXPRESS WRITTEN AUTHORIZATION OF DELL. IN ADDITION, NEITHER THIS SHEET NOR THE INFORMATION IT CONTAINS WAY BE USED BY OR DISCLOSED TO ANY THIRD PARTY WITHOUT DELL'S EXPRESS WRITTEN CONSENT.

THIS SHEET OF ENGINEERING DRAWING IS THE PROPRIETARY PROPERTY OF COMPAL ELECTRONICS, INC. AND CONTAINS CONFIDENTIAL AND TRADE SECRET INFORMATION. THIS SHEET MAY NOT BE TRANSFERED FROM THE CUSTODY OF THE COMPETENT DIVISION OF R&D DEPARTMENT EXCEPT AS AUTHORIZED BY COMPAL ELECTRONICS, INC. NEITHER THIS SHEET NOR THE INFORMATION IT CONTAINS

DELL CONFIDENTIAL/PROPRIETARY

Compal Electronics, Inc.		
Title: +1.05VM		
Size	Document Number: LA-5772P	Rev 0.1
Date: Thursday, January 21, 2010	Sheet 48 of 60	

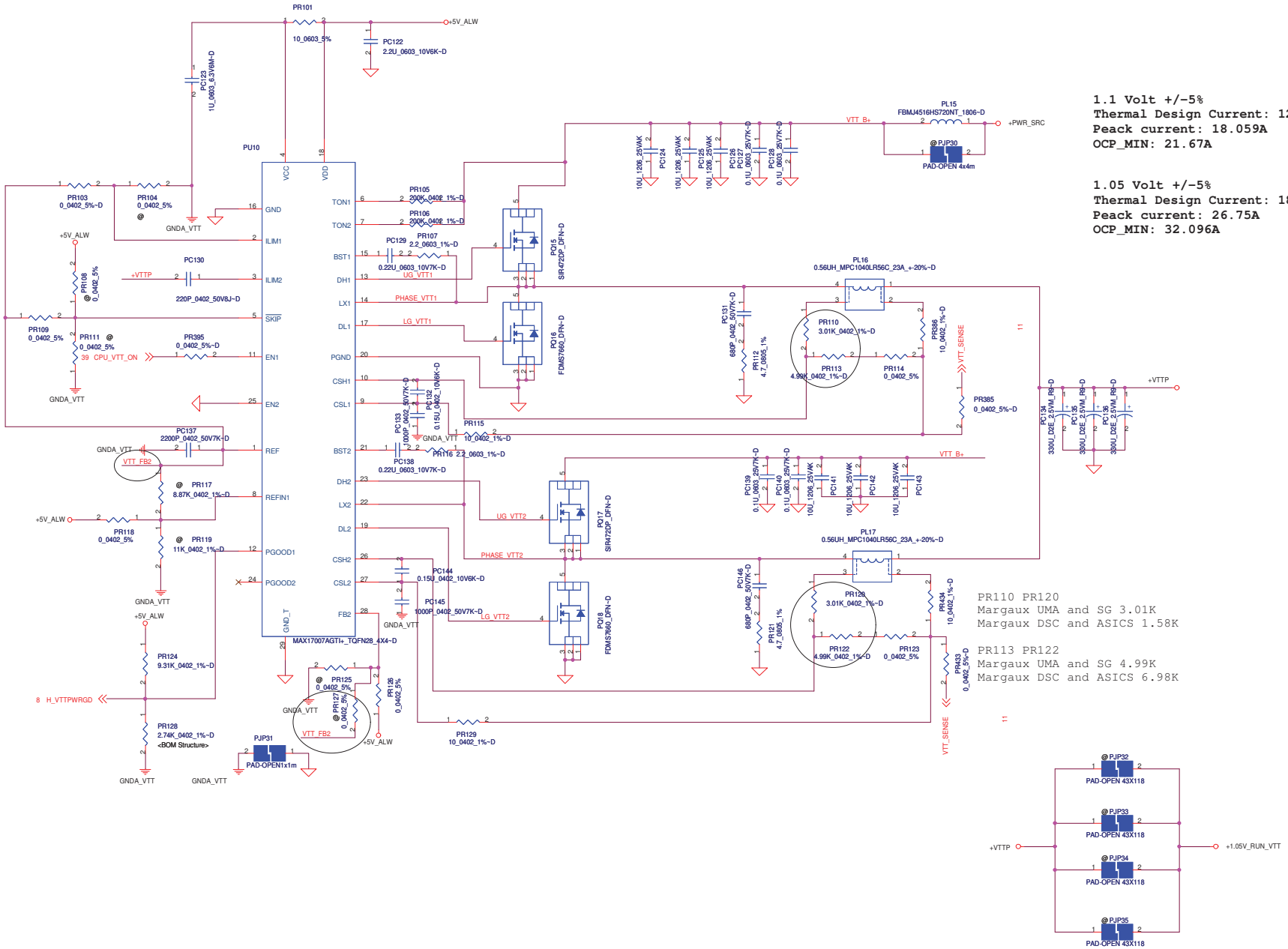

1.1 Volt +/-5%
Thermal Design Current: 12.641A
Peack current: 18.059A
OCP_MIN: 21.67A

1.05 Volt +/-5%
Thermal Design Current: 18.72A
Peack current: 26.75A
OCP_MIN: 32.096A

Title	<Title>	
Size C	Document Number LA-5772P	Rev 1A
Date: Thursday, January 21, 2010	Sheet 49 of 50	

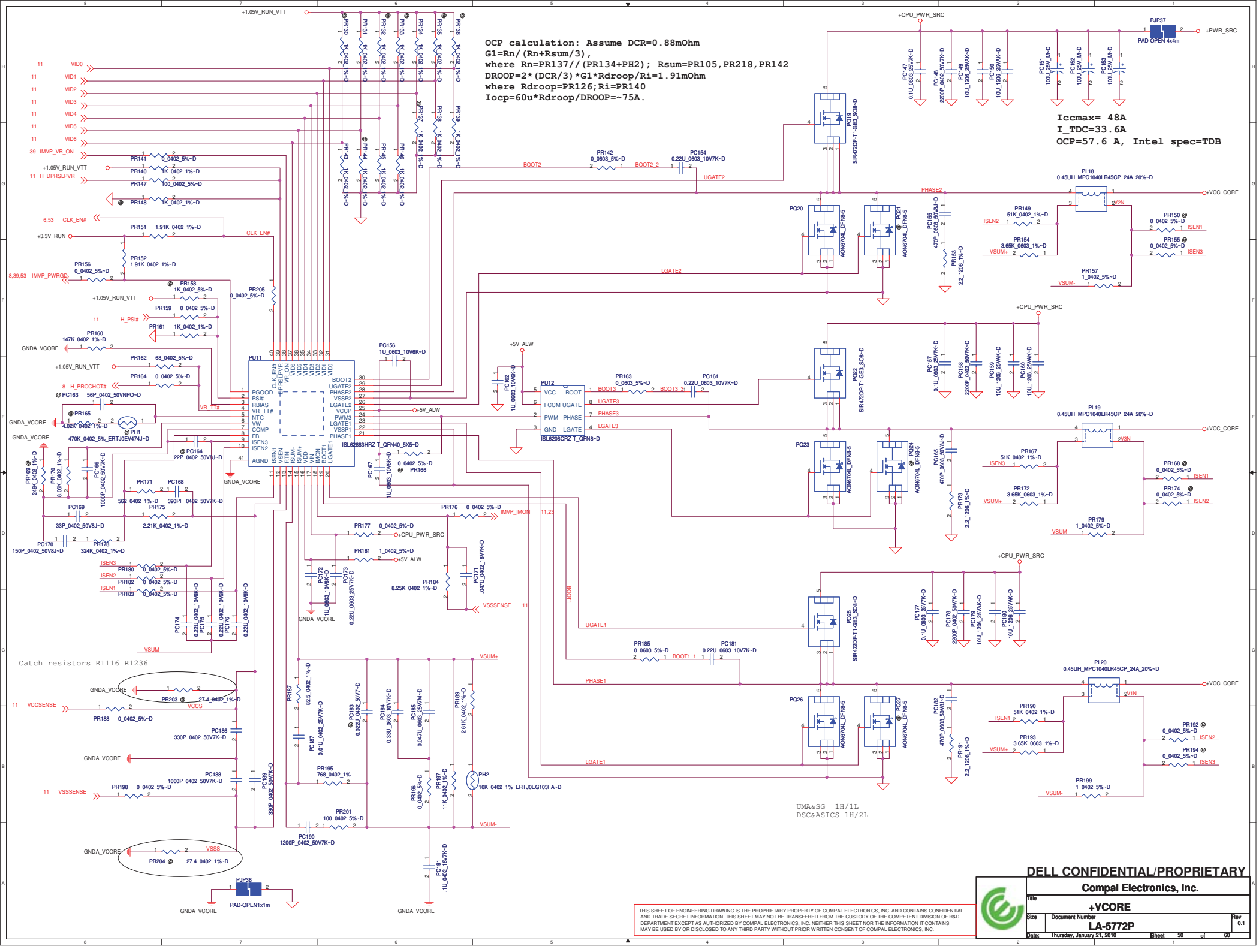

THIS SHEET OF ENGINEERING DRAWING IS THE PROPRIETARY PROPERTY OF COMPAL ELECTRONICS, INC. AND CONTAINS CONFIDENTIAL AND TRADE SECRET INFORMATION. THIS SHEET MAY NOT BE TRANSFERED FROM THE CUSTODY OF THE COMPETENT DIVISION OF R&D DEPARTMENT EXCEPT AS AUTHORIZED BY COMPAL ELECTRONICS, INC. NEITHER THIS SHEET NOR THE INFORMATION IT CONTAINS MAY BE USED BY OR DISCLOSED TO ANY THIRD PARTY WITHOUT PRIOR WRITTEN CONSENT OF COMPAL ELECTRONICS, INC.

DELL CONFIDENTIAL/PROPRIETARY

Compal Electronics, Inc.

Title	+VCORE	
Size	Document Number: LA-5772P	Rev 0.1
Date: Thursday, January 21, 2010	Sheet 50 of 60	

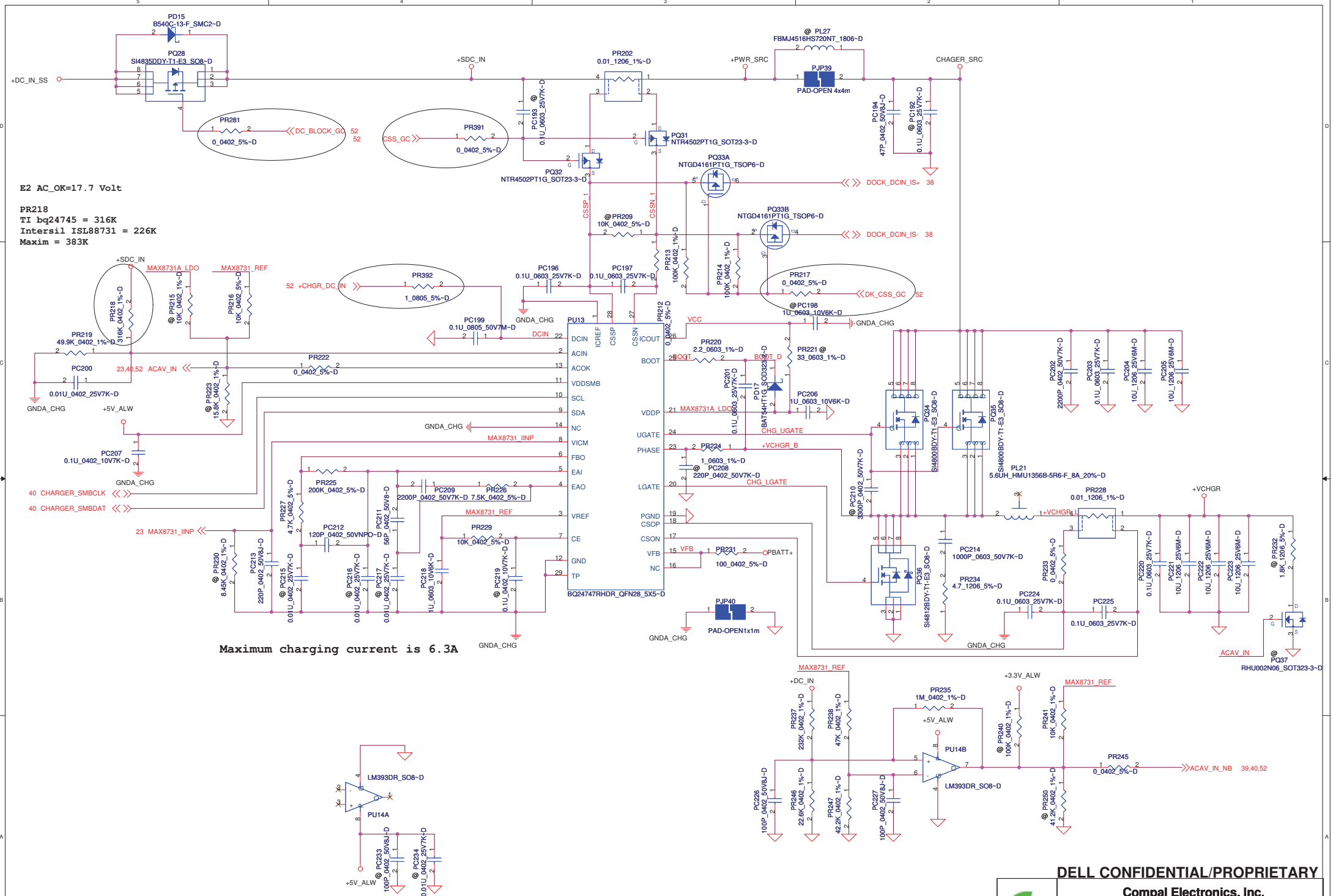

THIS SHEET OF ENGINEERING DRAWING IS THE PROPRIETARY PROPERTY OF COMPAL ELECTRONICS, INC. AND CONTAINS CONFIDENTIAL AND TRADE SECRET INFORMATION. THIS SHEET MAY NOT BE TRANSFERED FROM THE CUSTODY OF THE COMPETENT DIVISION OF R&D DEPARTMENT EXCEPT AS AUTHORIZED BY COMPAL ELECTRONICS, INC. NEITHER THIS SHEET NOR THE INFORMATION IT CONTAINS MAY BE USED BY OR DISCLOSED TO ANY THIRD PARTY WITHOUT PRIOR WRITTEN CONSENT OF COMPAL ELECTRONICS, INC.

DELL CONFIDENTIAL/PROPRIETARY

Compal Electronics, Inc.	
Title	Charger
Size	
Document Number	LA-5772P
Rev	0.1
Date: Thursday, January 21, 2010	Sheet 51 of 60

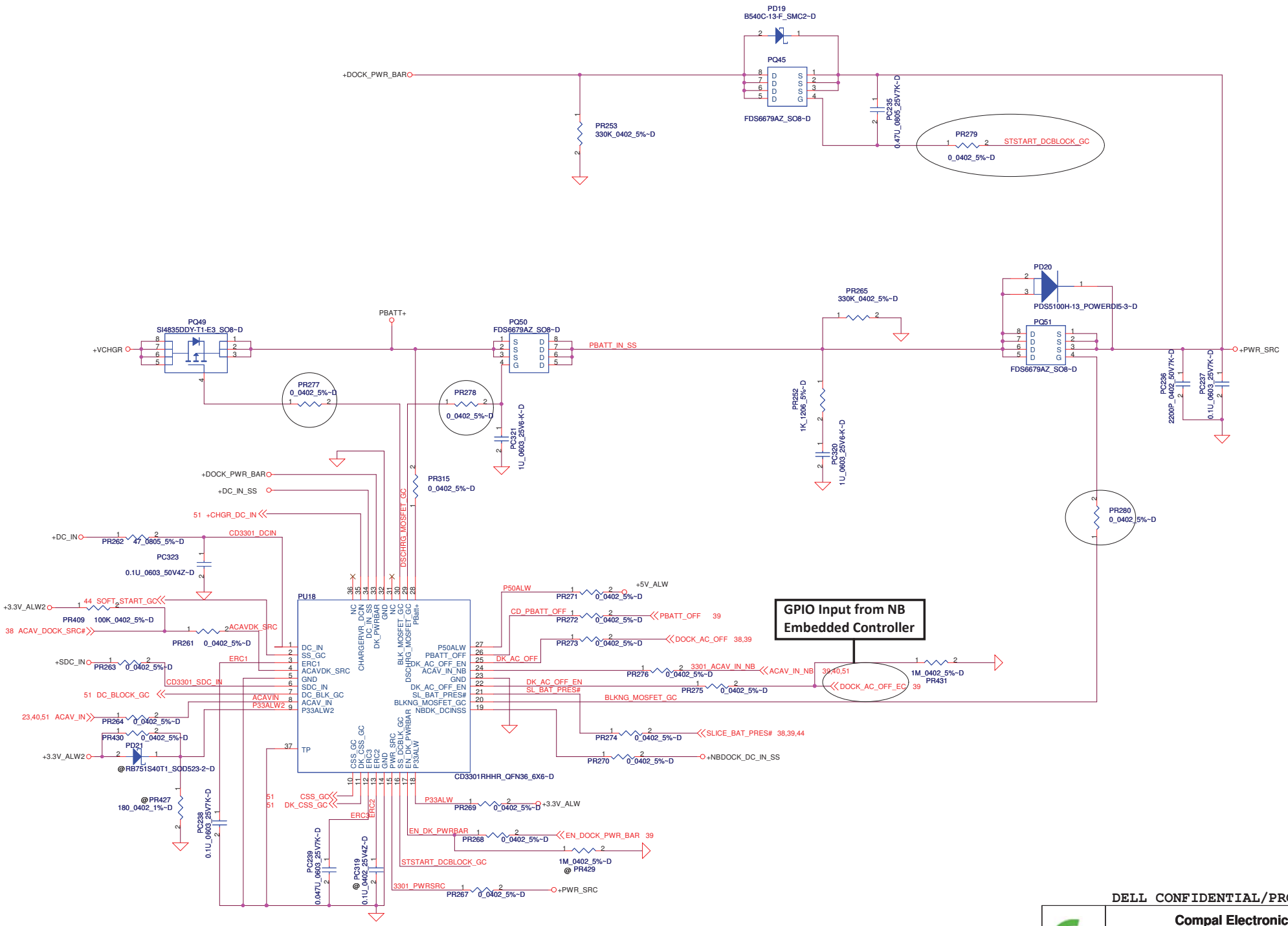

GPIO Input from NB Embedded Controller

DELL CONFIDENTIAL/PROPRIETARY

PROPRIETARY NOTE: THIS SHEET OF ENGINEERING DRAWING AND SPECIFICATIONS CONTAINS CONFIDENTIAL TRADE SECRET AND OTHER PROPRIETARY INFORMATION OF DELL INC. ("DELL") THIS DOCUMENT MAY NOT BE TRANSFERRED OR COPIED WITHOUT THE EXPRESS WRITTEN AUTHORIZATION OF DELL. IN ADDITION, NEITHER THIS SHEET NOR THE INFORMATION IT CONTAINS WAY BE USED BY OR DISCLOSED TO ANY THIRD PARTY WITHOUT DELL'S EXPRESS WRITTEN CONSENT.

Compal Electronics, Inc.			
Title: Selector			
Size	Document Number: LA-5772P		Rev 0.1
Date: Thursday, January 21, 2010	Sheet 52 of 60		

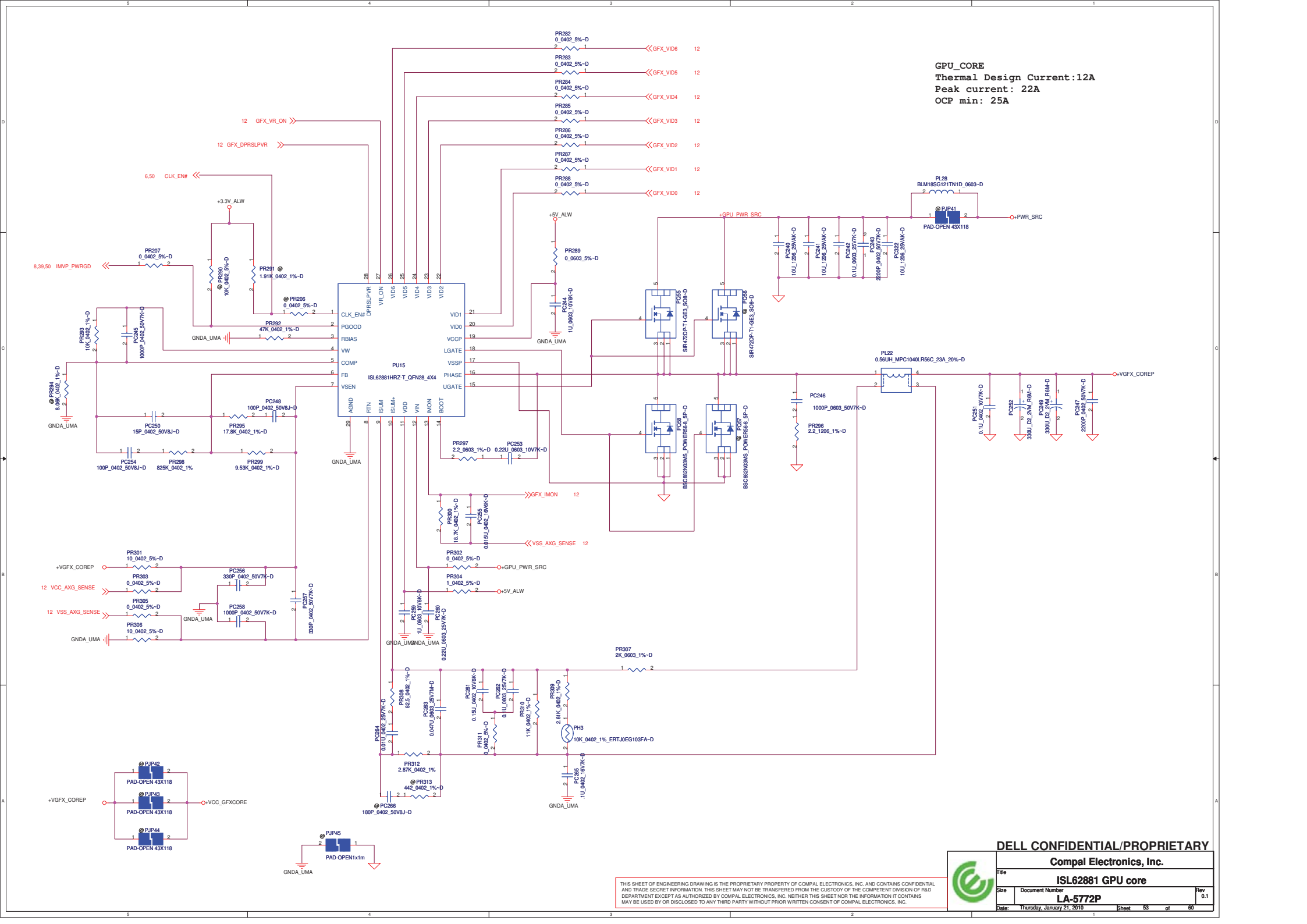

THIS SHEET OF ENGINEERING DRAWING IS THE PROPRIETARY PROPERTY OF COMPAL ELECTRONICS, INC. AND CONTAINS CONFIDENTIAL AND TRADE SECRET INFORMATION. THIS SHEET MAY NOT BE TRANSFERED FROM THE CUSTODY OF THE COMPETENT DIVISION OF R&D DEPARTMENT EXCEPT AS AUTHORIZED BY COMPAL ELECTRONICS, INC. NEITHER THIS SHEET NOR THE INFORMATION IT CONTAINS MAY BE USED BY OR DISCLOSED TO ANY THIRD PARTY WITHOUT PRIOR WRITTEN CONSENT OF COMPAL ELECTRONICS, INC.

DELL CONFIDENTIAL/PROPRIETARY

Compal Electronics, Inc.	
Title	ISL62881 GPU core
Size	Document Number: LA-5772P
Rev	0.1
Date: Thursday, January 21, 2010	Sheet 53 of 60

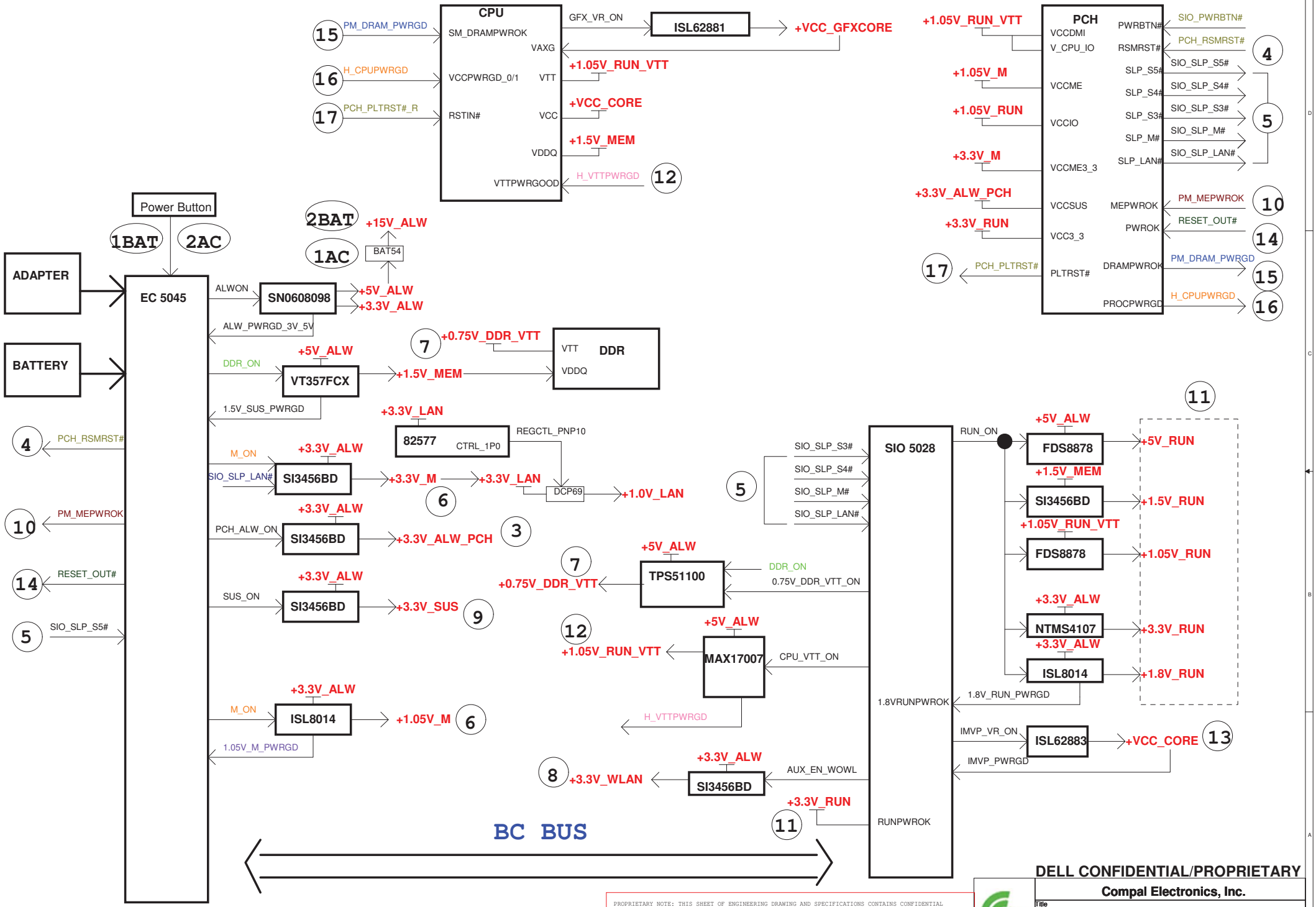

PROPRIETARY NOTE: THIS SHEET OF ENGINEERING DRAWING AND SPECIFICATIONS CONTAINS CONFIDENTIAL TRADE SECRET AND OTHER PROPRIETARY INFORMATION OF DELL INC. ("DELL") THIS DOCUMENT MAY NOT BE TRANSFERRED OR COPIED WITHOUT THE EXPRESS WRITTEN AUTHORIZATION OF DELL. IN ADDITION, NEITHER THIS SHEET NOR THE INFORMATION IT CONTAINS WAY BE USED BY OR DISCLOSED TO ANY THIRD PARTY WITHOUT DELL'S EXPRESS WRITTEN CONSENT.

DELL CONFIDENTIAL/PROPRIETARY

Compal Electronics, Inc.

Title: Power Sequence

Size | Document Number: LA-5571P | Rev: 0.1

Date: Thursday, January 21, 2010 | Sheet 54 of 60

Version Change List (P. I. R. List)

Item	Page#	Title	Date	Request Owner	Issue Description	Solution Description	Rev.
1	21	HW	5/19/2009	Intel	Remove R689	R689 is only required is power measurements are planned	X01
2	28	HW	5/19/2009	DELL	Remove AGND	Remove the AGND plane and leave everything as DGND. After discussing with IDT there is no value having AGND plane if there is no AGND plane on the IO board and all along the analog signal path.	X01
3	40	HW	5/19/2009	COMPAL	Board ID	R98 change to 130k ohm	X01
4	31	HW	5/21/2009	DELL	5882 support M25 ROM part	Add U19	X01
5	15	HW	5/27/2009	Intel	ES2 deos not need PU/PD for TRST#	Remove R808 & R1316, add test point	X01
6	31	HW	6/01/2009	Broadcom	Reserve SC_TEST & SCC_CMDVCC_N pad	Add @R775 & R776	X01
7	40	HW	6/02/2009	DELL	to prefent Q18 to glitch	Add R595 100K PD at EN_INVPWR	X01
8	34	HW	6/02/2009	DELL	for U52-STBY to both EXPRCRD_STBY# (Depop 0ohm res) and RUN_ON (Pop 0ohm res) for U52-CPPE to both EXPRCRD_PWREN# (Depop 0ohm res) and Card JEXP1 CPPE# pin 17	Add R684, @R687, depop R683	X01
9	15	HW	6/03/2009	Intel	Follow DPDG & ES2 request	R804 change from 47k to 51 ohm, pop R806 & R1315	X01
10	23	HW	6/03/2009	DELL	Fan solution change to M09 design	POP R507, R516, R519, R529, depop R531, R534, R535, D94-D96	X01
11	23	HW	7/01/2009	SMSC	Fan solution change by SMSC request	Change R1463 from 0.56 to 0.27	X01
12	42	HW	7/01/2009	COMPAL	Cost concern & Rdson concern by ADC	Change Q61 to AO4456 & Q55/Q183 to SI4164	X01
13	43	HW	7/01/2009	COMPAL	for derating concern	Change R1001 from 82 to 150 ohm	X01
14	8	HW	7/01/2009	Intel	Follow CRB by Intel request	R1286 needs to change to 0-ohm	X01
15	40	HW	7/01/2009	COMPAL	Board ID	Change R98 to 62K ohm.	X02
16	8,12,13, 42	HW	7/13/2009	Intel	Intel S3 reduction circuit.	Add R1469, R1471-R1474, R1476, R1479-R1484, R1487, C1872-C1879, Q199-Q201, Q204-Q207, U141, PJP57, PJP58, PR428, change R624 to 22 ohm, R879 to 1.5K, R880 to 750, pop Q78, add net DDR_HVREF_RST_GATE from U36.A34, CPU1.5V_S3_GATE from U36.A36, change CPU VDDQ net name to +1.5V_CPU_VDDQ connect RUN_ON_CPU1.5VS3# to Q78.2 Q204.2,	X02
17	30	HW	7/13/2009	COMPAL	+3.3V_LAN enable control follow M09	De-pop R47	X02
18	8,15	HW	7/14/2009	COMPAL	Depop all related components where are located at 0 Z-hight area	Depop JXDP1, JXDP2, JDEG1, JP2 circuit	X02
19	21	HW	7/14/2009	Intel	Add filter for PCH VCCADPLLA/B	Add L97,L98,R1488,C1880-C1883, Remove C105, C106	X02
20	19	HW	7/14/2009	Intel	GPIO1,6,7 PU if not being used	Add R1489-R1491	X02
21	24	HW	7/14/2009	COMPAL	Camera need to be changed from 7 to 8 pin	Change JEDP1 pin definition	X02
22	37	HW	7/16/2009	COMPAL	JTP1, JBIO1 power gnd pins redefined	Change JTP1, JBIO1 pin definition	X02
23	37,40	HW	7/16/2009	SMSC	LAT_ON_SW# needs to be added a 1uF cap	Add @C1884, C1885, R1492, change R560 to 100K, JIO.32 change to LAT_ON_SW_BTN#	X02
24	23	HW	7/16/2009	SMSC	R594 has to be a group with R3P circuit	De-pop R594 for M09 fan solution	X02
25	23	HW	7/16/2009	SMSC	Request by SMSC R3P	Remove D94-D96	X02
26	31	HW	7/17/2009	Braodcom	Found both PD R898 and PU R485 pop	depopulate R898 for normal operation	X02
27	31	HW	7/17/2009	Braodcom	RFID disable circuit remove	Remove R1062-R1065	X02
28	16	HW	7/17/2009	Intel	Intel requires the use of the 25Mhz crystal on UMA and SG platforms	Populate Y6, C1168(18pF), R379, R685, R381 change to C1169(18pF).	X02
29	31	HW	7/17/2009	Braodcom	+SC_VCC Capacitor (C718) Value Change	Broadcom has recommneded changing the value of C718 from .47uF to 220nF	X02
30	42	HW	7/17/2009	COMPAL	Backdrive EA Failure on Margaux/ASICS	Pop R625 and Q79	X02
31	24	HW	7/17/2009	DELL	eDP repeater change to SN75DP119.	update U46 circuit for eDP repeater	X02
32	29	HW	7/17/2009	COMPAL	EMI solution	C676 to 150pF and R1295 to L4 (220 ohm), R1217 change to 47 ohm, pop C673 & R588	X02
33	23	HW	7/17/2009	COMPAL	R3P circuit by SMSC request	R536 depop for 3P FAN, R1457 change to 0 ohm, R138 change to 27K ohm	X02
34	36,39	HW	7/22/2009	DELL	Reconnect the signal UWB_RADIO_DIS#	connect UWB_RADIO_DIS# from EC5028.A56 to MINI3.20	X02
35	23	HW	7/22/2009	DELL	Change FAN solution to M09	De-pop R3P circuit component & pop M09 solution	X02
36	42	HW	7/23/2009	COMPAL	de-rating result fail	Change Q61 from AO4456 to NTMS4107	X02

DELL CONFIDENTIAL/PROPRIETARY

PROPRIETARY NOTE: THIS SHEET OF ENGINEERING DRAWING AND SPECIFICATIONS CONTAINS CONFIDENTIAL TRADE SECRET AND OTHER PROPRIETARY INFORMATION OF DELL INC. ("DELL") THIS DOCUMENT MAY NOT BE TRANSFERRED OR COPIED WITHOUT THE EXPRESS WRITTEN AUTHORIZATION OF DELL. IN ADDITION, NEITHER THIS SHEET NOR THE INFORMATION IT CONTAINS WAY BE USED BY OR DISCLOSED TO ANY THIRD PARTY WITHOUT DELL'S EXPRESS WRITTEN CONSENT.

Version Change List (P. I. R. List)

Item	Page#	Title	Date	Request Owner	Issue Description	Solution Description	Rev.
37	24	HW	7/23/2009	TI	eDP repeater DP119 vender review request	reserve pop option for X1EDP & DP119, change PU/PD to 20K.	X02
38	28	HW	7/23/2009	DELL	We will never disable the power to HDD redriver, go back connected in SSI	Remove R1493 & delete SATA_PWRSAVE	X02
39	18,28,40	HW	7/23/2009	DELL	There has been some confusion due to the net name showing active low	change net name HDD_FALL_INT1# to HDD_FALL_INT to show correct polarity	X02
40	29	HW	7/24/2009	DELL	use the SiTimes part due to the cost savings	change X4 from TXC to SiTimes.	X02
41	31	HW	7/24/2009	Braodcom	connect pin-L10 of U32 to pin-5 of U33, and disconnect pin-D2 from pin-5 of U33	pop R775, de-pop R776	X02
42	33	HW	7/24/2009	COMPAL	fixed SD/MMC Clock overshoot and undershoot	Changing R8 dumping from 0-ohm to 10-ohm	X02
43	31	HW	7/24/2009	Braodcom	BCM5880 Leakage Issue on Margaux	Add Q208,Q209,R1496 circuit to fix.	X02
44	37,39	HW	7/27/2009	DELL	ESATA repeater power saving	Add a 0 ohm jumper between EN pin and VDD, but no-pop it. Then connect the EN pin to 5028.A47 with a 0 ohm jumper that is popped.	X02
45	39	HW	7/27/2009	DELL	Sometimes VGA_ID_DISC and VGA_ID_UMA both read as low	Change R875 and R881 to +3.3V_ALW rail.	X02
46	26	HW	7/27/2009	Parade	new DP PHY test requirement	change R363 value from 499ohm to 1k ohm	X02
47	23	HW	7/27/2009	SMSC	SMSC review feedback	The pull-up source of the R150 should be changed to +VCC_4002	X02
48	31	HW	7/27/2009	NXP	Better for decoupling noise	Change C1015 ,C633 to 10pf	X02
49	33	HW	7/27/2009	TXC	EA result	C514, C515 have to change to 22pF	X02
50	36	HW	7/27/2009	DELL	For PCH GPIOs rail.	PCIE_MCARD3_DET# & USB_MCARD1_DET# pull-ups (R458 & R438) need to change from +3.3V_ALW_PCH rail to +3.3V_RUN rail	X02
51	23,40	HW	7/29/2009	SMSC	per SMSC 5045 AN 19.6, 4002 AN 16.11	R541, R554, R1492 should be 10K, R147 should be populate, Add R1498	X02
52	35	HW	7/29/2009	DELL	Braidwood has been removed from Ibex Peak platforms	De-pop JBW1 & R1453	X02
53	15,40	HW	7/29/2009	KDS	KDS crystal EA result	change UMA C296 & C297 to 12pF, C674, C675 to 27pF	X02
54	39	HW	7/29/2009	DELL	GPIO MAP update	change net name from RESERVED FOR ESATA to EN_ESATA_RPTR	X02
55	42	HW	7/29/2009	Compal	By Intel S3 timing concern	reserve R1500 & @R1499 0 ohm for Q206.2 from RUN_ON_CPU1.5VS3# & RUN_ON_ENABLE#	X02
56	13,14	HW	7/30/2009	Compal	EMI concern	POP C1121-C1124, C1145-C1148	X02
57	37	HW	7/30/2009	Intel	Intel continues to recommend that all pre-production and production motherboards include common mode choke footprints to enable a stuffing option in case a choke is required to pass EMI testing	Add @L30, @L31, R424-R427	X02
58	31	HW	7/30/2009	Broadcom	Broadcom schematic review request	pop R537; Remove C647, C641,R634, R498, R898; Add @C1886 & @C1887; Remove L73, R631, C1026, R494, Short net RFREADER_TXN1_PI_R to RFREADER_RXP_C; Remove C642, C640, change R487, R496 to 0 ohm; Add @R1501; de-pop R496 & R497; JCS1 pin2 & pin3 and pin4 & pin5 should be short to carry higher current.	X02
59	31	HW	7/30/2009	Compal	Solve smart card cage vender reverse pin definition.	Reverse JSC1 pin definition	X02
60	27	HW	7/31/2009	Compal	CRB EA result	C390, C518, C996, C251-C253 to 4.7pF; L61-L63 to 5-Ohm Bead	X02
61	31	HW	7/31/2009	Broadcom	Broadcom schematic review request	The pin1 of R497 and R496 should be connected to GND	X02
62	8,15	HW	7/31/2009	Intel	For XDP debug concern	Populate all the resistors and leave out the connector	X02
63	27	HW	8/03/2009	Compal	CRB EA result	C251-C253 to 3.3pF; L61-L63 to 10-Ohm Bead ; De-pop C996, C518, C390	X02
64	23	HW	8/03/2009	Compal	If populate R147 PU resistor for THERM_STP#, it will impact ALWON signal at MEC 5045	De-pop R147	X02
65	30,33	HW	8/04/2009	KDS	KDS crystal EA result	change UMA C427 change to 200 ohm, C514, C515 back to 15P and change X3 from CL=16pF to CL=12pF	X02
66	8	HW	8/05/2009	DELL	fix the Intel S3 power up timing	change C1877 from 0.01uF to 0.22uF 0402 cap.	X02
67	21	HW	8/05/2009	Intel	WW30 Calpella MoW	Intel request change L97 & L98 to 10uH, DCR=0.36 ohm	X02

DELL CONFIDENTIAL/PROPRIETARY

PROPRIETARY NOTE: THIS SHEET OF ENGINEERING DRAWING AND SPECIFICATIONS CONTAINS CONFIDENTIAL TRADE SECRET AND OTHER PROPRIETARY INFORMATION OF DELL INC. ("DELL") THIS DOCUMENT MAY NOT BE TRANSFERRED OR COPIED WITHOUT THE EXPRESS WRITTEN AUTHORIZATION OF DELL. IN ADDITION, NEITHER THIS SHEET NOR THE INFORMATION IT CONTAINS WAY BE USED BY OR DISCLOSED TO ANY THIRD PARTY WITHOUT DELL'S EXPRESS WRITTEN CONSENT.

Version Change List (P. I. R. List)

Item	Page#	Title	Date	Request Owner	Issue Description	Solution Description	Rev.
68	28,37	HW	8/06/2009	Compal	Per ESATA/SATA EA result	pop R1301, R1304, de-pop R1298, R1308	X02
69	10,26,38	HW	8/06/2009	Intel	Per Intel check list rev1.6	change R186, R796, R798 from 100k to 110k ohm, R1109 to 3.3K ohm	X02
70	28	HW	8/06/2009	Compal	ODD_DET# PU from +5V_MOD to +3.3V_RUN	connect R1239.1 to +3.3V_RUN & pop R1239	X02
71	42	HW	8/06/2009	SMSC	Watch dog timer may not be resetED when 4002 VDD_PWRGD is not completely at Logic Low	Pop R616 to 39 & pop Q72	X02
72	30	HW	8/10/2009	Intel	Remove the VCT trace	Remove @R562, @C41	X02
73	35	HW	8/10/2009	DELL	Braidwood Removal on RAM	Remove @JBW1, @C1851, @R1452, @R1453, @C1852, R1411	X02
74	31	HW	8/11/2009	Broadcom	Broadcom review request	Remove @R1061, Change C718 value to 470pF, change C646 value to 220pF. pin2 of R470 should have a 0ohm but de-pop resistor to USB_GPIO27 net.	X02
75	8	HW	8/11/2009	Intel	Intel review request	add @R1504 for DDR3_DRAMRST#_CPU PD & add C1888 for PM_DRAMRST# to slow down gate of FET	X02
76	33	HW	8/11/2009	Richo	Change pop option for R5U242	Change C21 from 10U to 47U, change R46 to C1889 (1uF)	X02
77	24	HW	8/12/2009	DELL	EDP_HPD signal may too low to turn on FET.	Change Q3 to BSS138	X02
78	21	HW	8/12/2009	Intel	Follow CRB rev 1.6 schematic	No stuff C111 and C112	X02
79	31	HW	8/12/2009	Broadcom	Per Broadcom request	pop R496 & R497 (0 ohm)	X02
80	31	HW	8/12/2009	Compal	Smart card EA result	change R772 to 47 Ohm for resolving SC_CLK Rise/Fail timing issue	X02
81	8	HW	8/12/2009	Intel	Follow Intel S3 white paper rev0.9	pop R1504 & change C1888 to 470pF	X02
82	37	HW	8/12/2009	Compal	disconnect IO & DOCK VCT	rename IO VCT to +LOM_VCT_IO & reserve C712 pad for test.	X02
83	31	HW	8/13/2009	Broadcom	Per Broadcom request	need to have 4.7K pull-up to 3.3V_ALW for BCM5882 pin-C1 "RSTOUT_N"	X02
84	8	HW	8/13/2009	DELL	Avoid a glitch for DDR_HVREF_RST_GATE, please add a 1.1K 1% no-stuff pull-up to +1.5V_CPU_VDDQ rail on the PM_DRAM_PWRGD_R signal for a back-up option	change C1888 to 0.1u, add @R1511 for PM_DRAM_PWRGD_R	X02
85	8,45	HW	8/13/2009	DELL	CPU detection since the edge diode has been removed from M'09	Add R1512 for CPU_DETECT# and connect JCPU.AH24 to U36.B18	X02
86	37	HW	8/14/2009	DELL	Invert the EN_ESATA_RPTR signal and connect this to SATAGP4/GPIO16	Add @R1513 & @Q210, pop R1494 and de-pop R1497, change net name from GPIO16 to EN_ESATA_RPTR#	X02
87	33	HW	8/14/2009	Compal	Solve 1394 impedance issue	Change R399, R400, R401, R403 to 54.9 ohm.	X02
88	37	HW	8/14/2009	Compal	EMI solution	pop L30 & L31, de-pop R424-R427	X02
89	11,12	HW	9/11/2009	Compal	Per PWR EA result	De-pop C66, pop C1090, C1091	X02
90	16	HW	9/11/2009	KDS	crystal EA result	Y6 change to CL=12pF & change C1168 & C1169 to 12pF.	X02
91	33,34	HW	9/11/2009	COMPAL	EMI solution for SD CLOCK & EXP card USB	R8 change to 22 ohm, pop L64 & depop R791, R792	X02
92	21	HW	9/11/2009	Intel	Intel request	de-pop C39, C610	X02
93	31	HW	9/11/2009	Broadcom	Broadcom review feedback	change C718 from 470p to .47u, C646 from 220p to .22u	X02
94	30	HW	9/11/2009	Intel	Follow Intel document request	change R1502 to C427 10pF, C475, C476 to 33pF	X02
95	12	HW	9/11/2009	DELL	Intel S3 circuitry issue on Margaux UMA	change C1873 from 4700p to 0.01uF	X02
96	21	HW	10/15/2009	Intel	Isolate pins AF32, AF34 and AH34 of PCH	Add C1893.	X02
97	35	HW	10/23/2009	Compal	Add PD 10k for Minicard PWR	Add R1523-R1525	X03
98	31	HW	10/23/2009	Compal	Smart card connector DFM issue	change JSC1 type (the same with Rothschild)	X03
99	40	HW	10/23/2009	COMPAL	Board ID	Change R98 to 4.3K ohm.	X03
100	17,21	HW	10/23/2009	Intel	Intel schematic check list 2.0 request	R268 change from 1k ohm to 10k ohm, de-pop C1881 & C1883	X03
101	40	HW	10/23/2009	SMSC	SMSC review feed back	R561 and R1046 are too large it is recommend that no PU/PD be larger than 100K	X03
102	12,42	HW	10/23/2009	COMPAL	avoid double bleed off	+3.3V_M, +3.3V_RUN, +1.5V_CPU_VDDQ power plane discharge circuit have been pop, de-pop R612, R607, R1471.	X03
103	36	HW	10/23/2009	DELL	support WiMax LED status	Need to populate R840	X03
104	40	HW	10/25/2009	KDS	KDS Crystal EA result	change C674, C675 from 27pF to 33pF	X03
105	16,32	HW	10/25/2009	COMPAL	Change R910 placement	Please put R910 close to PCH not TCM chip	X03
106	41	HW	10/25/2009	COMPAL	Touch Pad PU need to move from 5V to 3V	R613, R614 change power rail from +5V_ALW to +3.3V_ALW	X03
107	31	HW	10/28/2009	Broadcom	For 5882-B0 request	L71, L72 68nH, 2%, 400mA; C1070, C1071 1500pF, 2%, 50V; C1886, C1887 150pF, 2%, 50V	X03

DELL CONFIDENTIAL/PROPRIETARY

PROPRIETARY NOTE: THIS SHEET OF ENGINEERING DRAWING AND SPECIFICATIONS CONTAINS CONFIDENTIAL TRADE SECRET AND OTHER PROPRIETARY INFORMATION OF DELL INC. ("DELL") THIS DOCUMENT MAY NOT BE TRANSFERRED OR COPIED WITHOUT THE EXPRESS WRITTEN AUTHORIZATION OF DELL. IN ADDITION, NEITHER THIS SHEET NOR THE INFORMATION IT CONTAINS WAY BE USED BY OR DISCLOSED TO ANY THIRD PARTY WITHOUT DELL'S EXPRESS WRITTEN CONSENT.

Version Change List (P. I. R. List)

Item	Page#	Title	Date	Request Owner	Issue Description	Solution Description	Rev.
108	29	HW	10/28/2009	IDT	create a low pass filter with the pole set at 36kHz to filter out of band noise	de-pop C1066 & C1067, R1090, R1089 ; R340 & R342, R1091 & R1092 change to 2k, add C1894-C1897 1000pF.	X03
109	24	HW	10/28/2009	COMPAL	EMI concern	add 220 ohm bead for BIA_PWM_PCH	X03
110	29	HW	10/28/2009	COMPAL	ME request for JSPK1 swap	JSPK1 Pin 2 and pin 4 swap, pin 3 and pin 5 swap	X03
111	17	HW	10/29/2009	COMPAL	PCH CRT DDC pin up to 3.8V	add CRT DDC level shift, Q217, @R1526, @R1527	X03
112	8,12,13, 15,16,28	HW	10/29/2009	DELL	MEM SMBus design needs to change	Move Q190 connection, add R1528,R1529, add net name DDR_XDP_CLK/DAT	X03
113	31	HW	10/29/2009	DELL	smart card clock resistor	Change R772 from 47 ohm to 22 ohm	X03
114	37	HW	10/29/2009	COMPAL	EMI concern	pop R15 with 10 ohm and C15 with 10pF	X03
115	36	HW	10/29/2009	COMPAL	USB_MCARD2_DET# change to +3.3V_ALW_PCH	R447 pull up should change to +3.3V_ALW_PCH	X03
116	40	HW	10/29/2009	COMPAL	avoid RESET_OUT# double PD	de-pop R5	X03
117	15	HW	11/02/2009	COMPAL	EMI, RF team concern	pop C300, C302	X03
118	24	HW	11/04/2009	COMPAL	LCD power sequencing issue	change R161 from 470 to 130 ohm .	X03
119	37	HW	11/05/2009	COMPAL	EMI concern	Change choke vender from Murata to Delta on L30,L31	X03
120	29	HW	11/05/2009	COMPAL	RF team concern	X4 change from Sitime to TXC	X03
121	15	HW	11/05/2009	COMPAL	RTC issue	Y1 & Y4 change from 30ppm to 10ppm.	X03
122	15	HW	11/05/2009	COMPAL	For flash ROM EOL issue	U13 change from W25X32 to W25Q32	X03
123	19	HW	11/09/2009	DELL	PCH driving the siganl low at GPIO15 initial	add R1530 2.2K PU resistor to +3.3V_ALW_PCH on the SIO_EXT_WAKE# signal.	X03
124	39	HW	11/10/2009	DELL	add a 10K 5% PU to +3.3V_RUN on ME_FWP	Add R1531	X03
125	12	HW	11/11/2009	COMPAL	Surge voltage found at UMA GFX core	R358 changed from 4.7k ohm to 470 ohm	X03
126	8,15	HW	11/13/2009	COMPAL	To cut redundant trace for SMBUS	Add @R1532/R1533/R1536/R1537	X03
127	19	HW	11/17/2009	Intel	By Intel check list request	Add R1543 & R1544 for PCH GPIO22/34	X03
128	41	HW	12/24/2009	Compal	To solve touch pad ESD issue	Change L41 and L42 to R1545 & R1546 with 100 ohm.	X03
129	29	HW	12/24/2009	Compal	RF noise issue concern	change Sitime 12MHz oscillator X4 to driver strength 1x	X03
130	15	HW	12/24/2009	Intel	Follow Intel check list rev2.0	Change R224 to tolerance from 5% to 1%	X03
131	36	HW	12/24/2009	DELL	Wimax LED abnormal operation.	de-pop R1409	X03
132	38	HW	12/24/2009	Compal	Simplo battery slice EMI issue	Add C1899 and C1898(Depop,reserve for EMI test)	A00
133	31	HW	12/24/2009	Braodcom	By Broadcom request	Change L71,L72 from 68nH to 150nH, C1070,C1071 from 1500pF to 390pF.C1887, C1888 from 150pF to 390pF.	A00
134	40	HW	12/30/2009	DELL	Board ID	Change R98 from 4.3K to 1K for A00	A00
135	33,34	HW	12/30/2009	COMPAL	Change R5U242 to rev ES3	Change U94 from ES2 to ES3	A00
136	8,15	HW	12/30/2009	Intel	De-pop XDP & JTAG resistor	de-pop C19,C20,R6,R7,R68,R19,R3,R1153,R1156,R1157,R66,R1241,R780-R785, R22,R24,R78,R91,R101-R116,C1375,R69,R118,R123,R804,R807,R805,R806,R1281, R1282,R1315	A00
137	24	HW	01/14/2010	COMPAL	RF team concern	reserve C1900 for PWM	A00
138	28,37	HW	01/15/2010	COMPAL	Change Esata repeater for power save	Change U95 U96 from 412 to 412A	A00
139	11	HW	01/18/2010	COMPAL	No stuff MLCC caps to fix Acoustic noise	de-pop C50, C52, C57, C59	A00
140	15	HW	01/21/2010	COMPAL	For factory to do JTAG test	Pop R123, R804-R807, R1281, R1282, R1315	A00

DELL CONFIDENTIAL/PROPRIETARY

PROPRIETARY NOTE: THIS SHEET OF ENGINEERING DRAWING AND SPECIFICATIONS CONTAINS CONFIDENTIAL TRADE SECRET AND OTHER PROPRIETARY INFORMATION OF DELL INC. ("DELL") THIS DOCUMENT MAY NOT BE TRANSFERRED OR COPIED WITHOUT THE EXPRESS WRITTEN AUTHORIZATION OF DELL. IN ADDITION, NEITHER THIS SHEET NOR THE INFORMATION IT CONTAINS WAY BE USED BY OR DISCLOSED TO ANY THIRD PARTY WITHOUT DELL'S EXPRESS WRITTEN CONSENT.

Version Change List (P. I. R. List)

Item	Page#	Title	Date	Request Owner	Issue Description	Solution Description	Rev.
1	52	Selector	6/1	Compal	CD3301 burn issue	Change PR262 to 47_ohm, add PC323 0.1uF. Add PR409 pull up to +3.3V_ALW2. Delete PR266, add PD21 RB751.	
2	49	+1.05VTT	6/1	Compal ADC Guangyong	Change high side MOS to power pak	Change PQ15 PQ17 to Power pak SIR472DP.	
3	47	+0.75_DDR_VT/ +1.8V_RUN	6/1	Compal ADC Guangyong	Add type 3 cap	Add PC324 150pF	
4	48	+1.05V_VM_UMA	6/1	Compal ADC Guangyong	Add type 3 cap	Add PC325 150pF	
5	46	1.5V_MEM_UMA	6/1	Compal ADC Guangyong	Add droop resistor and input cap.	Add PR410 PC326	
6	47	+0.75_DDR_VT/ +1.8V_RUN	6/1	Compal ADC Guangyong	optimize ISL8014	change PR78 to 10K_ohm change PC81 PC85 PC86 to 10uH unpop PC82 unpop PR379 pop PR381	
7	48	+1.05V_VM_UMA	6/1	Compal ADC Guangyong	optimize ISL8014	change PR97 to 10K_ohm change PC115 PC119 PC120 to 10uH unpop PC116 unpop PR382 pop PR384	
8	50	+VCORE	6/8	Intersil	Change Isen resistor to 11K	Change PR149 PR167 PR190 to 11K_ohm SD03411028L	
9	46	+1.5V_MEM_UMA	6/11	Compal / TI	+1.5V_MEM_UMA output voltage over 2V	unpop PR56	
10	44	+DCIN	6/3	Dell	remove PBAT_ALARM# (6/3 Youssef_Daou)	delete DP5 PR6	
11	50	+VCORE	7/14	Dell / intersil	change Cisense GND to VSUM-	PC174 PC175 PC176 pin2 connect to VSUM-	
12	45	+5V/+3.3V	7/14	Compal ADC Guangyong	change 7*7 & 5*5 choke for cost down	change PL5 from SH00000H90L to SH00000FN0L change PL6 from SH00000HB0L to SH00000HR0L change PL11 from SH00000HE0L to SH00000HO0L change PL14 from SH00000HE0L to SH00000HY0L	
13	52	Selector	7/14	TI	CSS GC logic wrong issue	Add PR427 180_ohm to GND	
14	53	ISL62881_UMA	7/16	intersil	change Rbias to 47K_ohm	change PR292 to 47K_ohm	
15	52	Selector	7/16	Compal	Add 1M_ohm pull down to fix ACAV_IN_NB oscillation when battery mode S5	Add PR429	
16	50	+VCORE	7/16	intersil	change Isense resister to 51K_ohm	change PR149 PR167 PR190 to 51K_ohm	
17	52	Selector	7/22	TI	new version CD3301 (PG2.1) dont need PD21	un-pop PD21 add PR430	
18	52	Selector	7/22	TI	DOCK_AC_OFF_EC floating issue	add PR431	
19	53	ISL62881_UMA	7/22	Intersil	change frequency to 300K	change PR293 to 10K	
20	53	ISL62881_UMA	7/22	Intersil	change Rsum to 0603 package improve Vout accuracy	change PR307 from SD03436518L to SD01436518L	
21	50 / 53	+VCORE / ISL62881_UMA	8/10	Compal	change thermistor from 0603 to 0402 package for cost down	Change PH2 PH3 from SL200000B0L to SL20000100L	

Version Change List (P. I. R. List)

Item	Page#	Title	Date	Request Owner	Issue Description	Solution Description	Rev.
24	45 / 49 50 / 51	+5V/+3.3V +1.05VTT +Vcore charger	8/11	Compal	solve EMI issue	pop PC32 PC33 PR36 PR39 PL15 PC155 PC165 PC182 PR153 PR173 PR191 add PL27 PL28	
25	50	+Vcore	8/11	intersil / Gary	FAE suggestion (8/5)	PR175 change to 2.21K_ohm depop PC190 PR201	
26	50	+Vcore	8/11	Compal	adjust Vimon	change PC171 to 47nF	
27	53	ISL62881_UMA	8/13	Intersil	FAE suggestion (Kidwell gary) (maill from AJ 0813)	PR307 change to 2k,PR312 change to 2.87k,PR299 change to 10.5k, PC262 change to 0.12uF, PC255 change to 0.015uF,PC266 PR313 depop.	
28	45	+5V/+3.3V	8/17	TI/Compal	adjust OCP setting	Change PR31 from 243K to 232K, PR32 from 232K to 215K	
29	44	+DCIN	10/23	TI/Compal	slow soft star to fast issue	Change PR20 from 0_ohm to 10K.	
30	49	+1.05VTT	10/23	Intel	VTT power good voltage level change	Change PR124 from 28.7K to 9.31K. Change PR128 from 10K to 2.74K.	
31	51	Charger	10/23	Compal EMI	EMI solution	pop PC214 1000pF, PR234 4.7_ohm	
32	49	+1.05VTT	10/23	Maxim	fix VTT drop issue	ILIM = 30mV, un-pop PR104, PR103=0_ohm, PR110, PR120=3.01K_ohm ; PR113, PR122=4.99K_ohm ; PR114, PR123=0_ohm Ceq PC132,PC144 =0.15uF ; Filter PC133, PC145=un-pop ; PR115, PR129=0_ohm REF capacitor PC137 change to 2.2nF Add PR432, PR433 for dual remote sense	
33	51	Charger	10/23	TI	Reduce CD3301 pin34 pin 35 peak current	Change PR392 to 0805 size.	
34	51	Charger	11/10	Compal	ACAV_IN_NB level adjust. (10/29)	Change PR246 from 21.5K to 22.6K	
35	50	+Vcore	11/17	Compal	pop PC190 PR201 for improve 2nd source FDIM	pop PC190 PR201	
36	53	ISL62881_UMA	11/17	Compal	adjust Load Line for 2nd source	change PR299 from 10.5K to 9.53K.	
37	49	+1.05VTT	01/20	Maxim	fix dual palse issue	pop filter PC133, PC145=1000p ; PR115, PR129=10_ohm	
38	51	Charger	01/20	Compal	reduce surge current. (for CD3301)	Change PR392 form 0_ohm to 1ohm change PC199 from 1uF to 0.1uF	
39	51	Charger	01/20	Compal	EMI can pass without this bead. remove for cost saving.	un-pop PL27	

Title	<Title>		
Size C	Document Number <Doc>		Rev 3.0
Date: Thursday, January 21, 2010	Sheet 60 of 60		