Compal Confidential

Schematic Document

MCP79-MX

2009 / 02 / 19 Rev:1.0

Security Classification	Compal Secret Data		
Issued Date	2009/02/19	Deciphered Date	2009/12/31

THIS SHEET OF ENGINEERING DRAWING IS THE PROPRIETARY PROPERTY OF COMPAL ELECTRONICS, INC. AND CONTAINS CONFIDENTIAL AND TRADE SECRET INFORMATION. THIS SHEET MAY NOT BE TRANSFERED FROM THE CUSTODY OF THE COMPETENT DIVISION OF R&D DEPARTMENT EXCEPT AS AUTHORIZED BY COMPAL ELECTRONICS, INC. NEITHER THIS SHEET NOR THE INFORMATION IT CONTAINS MAY BE USED BY OR DISCLOSED TO ANY THIRD PARTY WITHOUT PRIOR WRITTEN CONSENT OF COMPAL ELECTRONICS, INC.

Compal Electronics, Inc.

Title: *Cover Sheet*

Size: Custom | Document Number: *LA-4631P* | Rev: 1.0

Date: Thursday, February 19, 2009 | Sheet 1 of 42

Compal confidential

Project Code: KCM00

File Name : LA-4631P

Braxton 14"

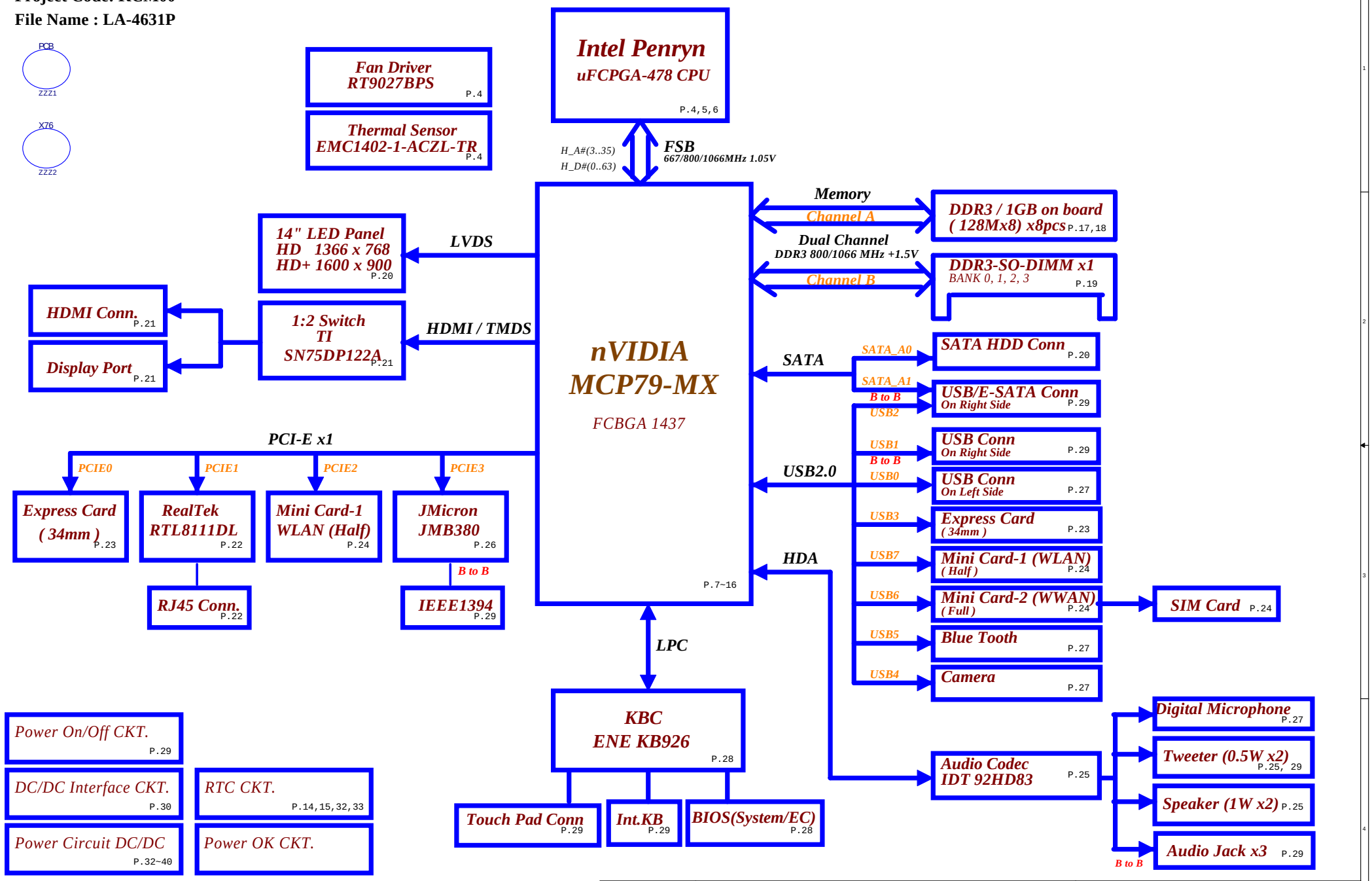

Security Classification	Compal Secret Data		
Issued Date	2009/02/19	Deciphered Date	2009/12/31

THIS SHEET OF ENGINEERING DRAWING IS THE PROPRIETARY PROPERTY OF COMPAL ELECTRONICS, INC. AND CONTAINS CONFIDENTIAL AND TRADE SECRET INFORMATION. THIS SHEET MAY NOT BE TRANSFERED FROM THE CUSTODY OF THE COMPETENT DIVISION OF R&D DEPARTMENT EXCEPT AS AUTHORIZED BY COMPAL ELECTRONICS, INC. NEITHER THIS SHEET NOR THE INFORMATION IT CONTAINS MAY BE USED BY OR DISCLOSED TO ANY THIRD PARTY WITHOUT PRIOR WRITTEN CONSENT OF COMPAL ELECTRONICS, INC.

Compal Electronics, Inc.

Title: Block Diagram

Size: Custom | Document Number: LA-4631P | Rev: 1.0

Date: Thursday, February 19, 2009 | Sheet 2 of 42

Voltage Rails

O MEANS ON X MEANS OFF

State \ power plane	+B	+5VALW +3VALW +1.1VALW	+1.5V	+5VS +3VS +1.8VS +1.1VS +VCCP +1.0VS +0.75VS +CPU_CORE +1.5VS
S0	O	O	O	O
S1	O	O	O	O
S3	O	O	O	X
S5 S4/AC	O	O	X	X
S5 S4/ Battery only	O	X	X	X
S5 S4/AC & Battery don't exist	X	X	X	X

Symbol Note :

: means Digital Ground

: means Analog Ground

@ : means just reserve , no build
DEBUG@ : means just reserve for debug.

Board ID Table for AD channel

Vcc	3.3V +/- 5%
Ra	100K +/- 5%

Board ID	Rb	V_{AD_BID} min	V_{AD_BID} typ	V_{AD_BID} max
0	0	0 V	0 V	0 V
1	18K +/- 5%	0.436 V	0.503 V	0.538 V
2	33K +/- 5%	0.712 V	0.819 V	0.875 V
3	56K +/- 5%	1.036 V	1.185 V	1.264 V
4	100K +/- 5%	1.453 V	1.650 V	1.759 V
5	200K +/- 5%	1.935 V	2.200 V	2.341 V
6	NC	2.500 V	3.300 V	3.300 V
7				

BOARD ID Table

Board ID	PCB Revision
0	0.1
1	0.2
2	0.3
3	0.4
4	0.5
5	1.0
6	
7	

SMBUS Control Table

	SOURCE	INVERTER	BATT	SERIAL EEPROM	THERMAL SENSOR (CPU)	SODIMM	EXP CARD	MINI CARD1	MINI CARD2
EC_SMB_CK1 EC_SMB_DA1	KB926	X	V	X	X	X	X	X	X
EC_SMB_CK2 EC_SMB_DA2	KB926	X	X	X	V	X	X	X	X
MEM_SMBCLK MEM_SMBDATA	MCP79	X	X	X	X	V	X	X	X
MCP_SMB_CLK MCP_SMB_DATA	MCP79	X	X	X	X	X	V	V	V

MINI CARD 1 RESERVED +3VALW TO PULL HIGH

THIS SHEET OF ENGINEERING DRAWING IS THE PROPRIETARY PROPERTY OF COMPAL ELECTRONICS, INC. AND CONTAINS CONFIDENTIAL AND TRADE SECRET INFORMATION. THIS SHEET MAY NOT BE TRANSFERED FROM THE CUSTODY OF THE COMPETENT DIVISION OF R&D DEPARTMENT EXCEPT AS AUTHORIZED BY COMPAL ELECTRONICS, INC. NEITHER THIS SHEET NOR THE INFORMATION IT CONTAINS MAY BE USED BY OR DISCLOSED TO ANY THIRD PARTY WITHOUT PRIOR WRITTEN CONSENT OF COMPAL ELECTRONICS, INC.

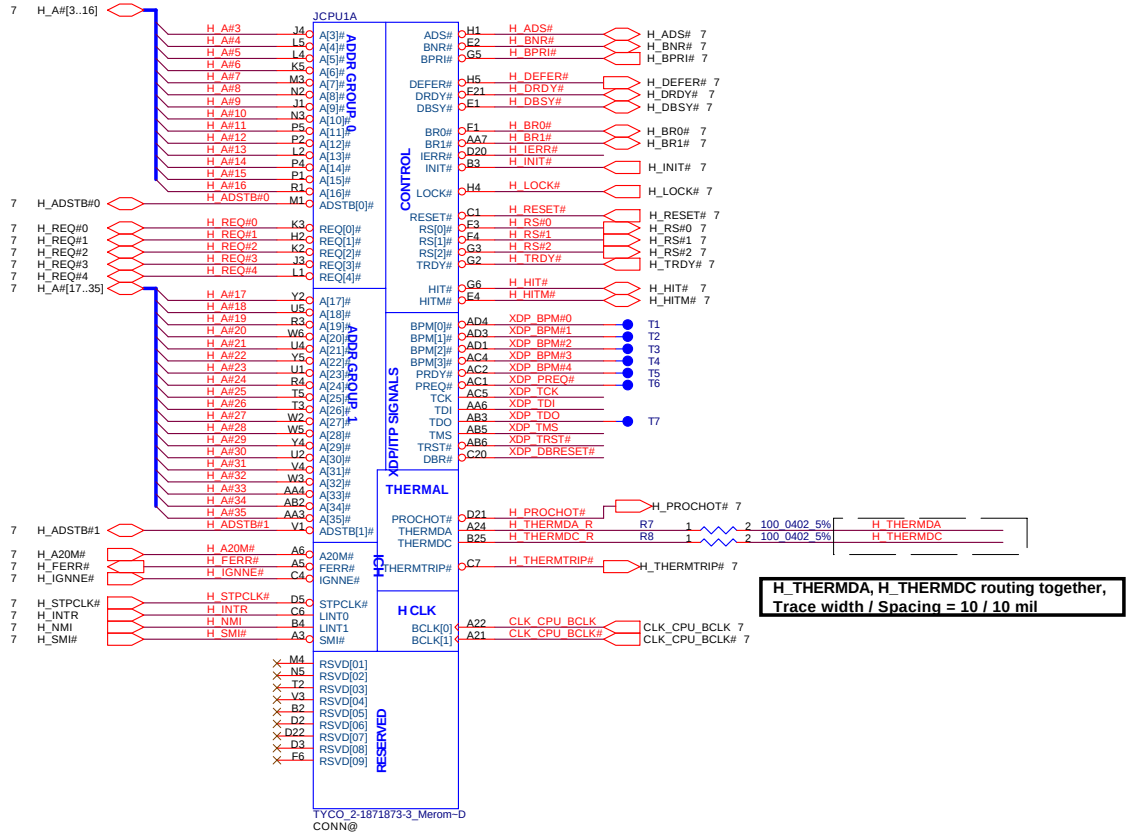

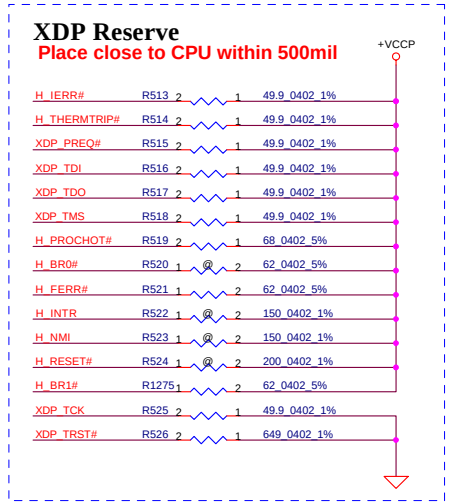

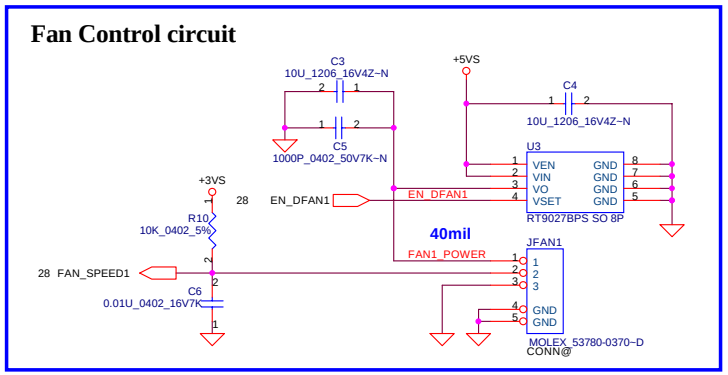

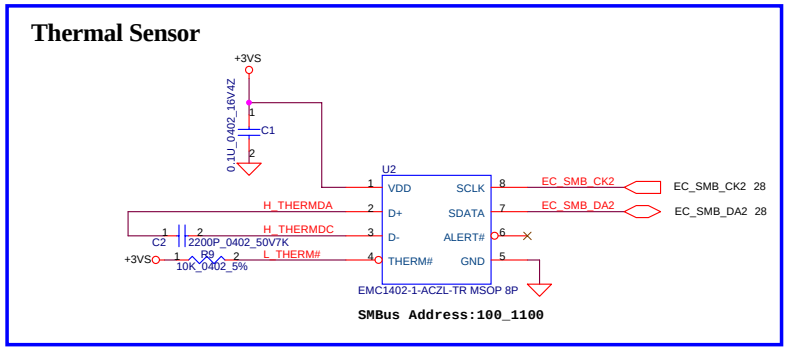

Security Classification	Compal Secret Data		
Issued Date	2009/02/19	Deciphered Date	2009/12/31

THIS SHEET OF ENGINEERING DRAWING IS THE PROPRIETARY PROPERTY OF COMPAL ELECTRONICS, INC. AND CONTAINS CONFIDENTIAL AND TRADE SECRET INFORMATION. THIS SHEET MAY NOT BE TRANSFERED FROM THE CUSTODY OF THE COMPETENT DIVISION OF R&D DEPARTMENT EXCEPT AS AUTHORIZED BY COMPAL ELECTRONICS, INC. NEITHER THIS SHEET NOR THE INFORMATION IT CONTAINS MAY BE USED BY OR DISCLOSED TO ANY THIRD PARTY WITHOUT PRIOR WRITTEN CONSENT OF COMPAL ELECTRONICS, INC.

Compal Electronics, Inc.

Title: **Penryn(1/3)-AGTL+/ITP-XDP**

Size: Custom | Document Number: LA-4631P | Rev: 1.0

Date: Tuesday, February 24, 2009 | Sheet 4 of 42

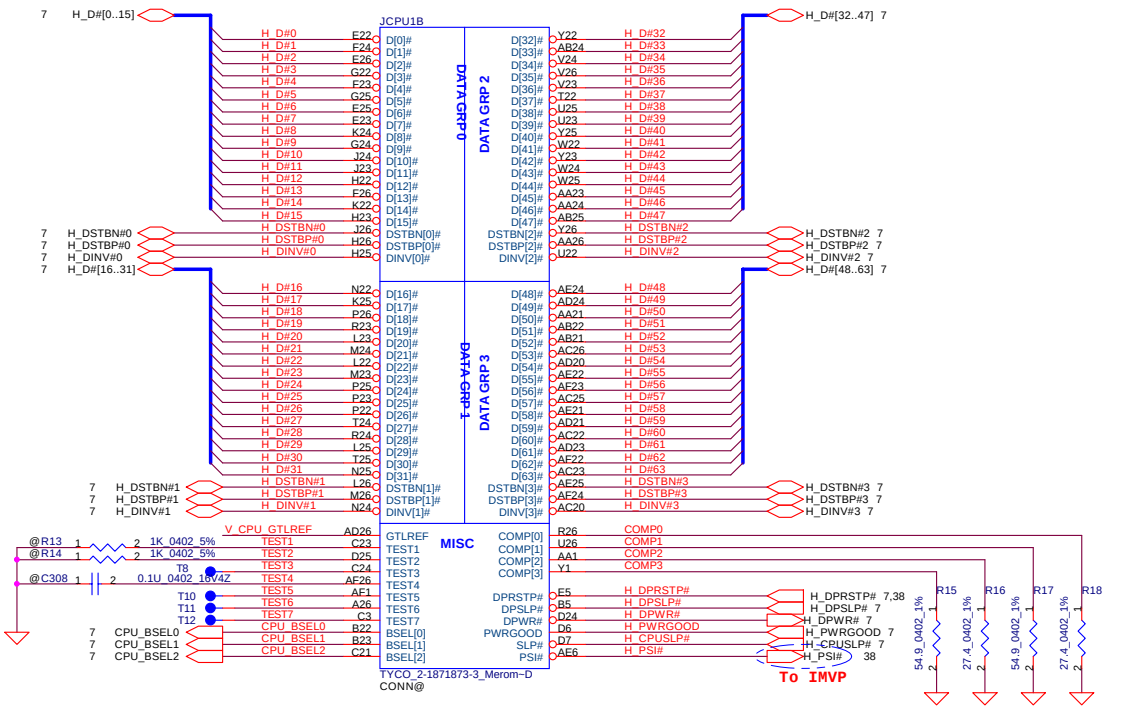

layout note: Rout H_DPRSTP# from ICH9 to IMVP6 then to GMCH & CPU

layout note: Route TEST3 & TEST5 traces on ground referenced layer to the TPs

CPU_BSEL	CPU_BSEL2	CPU_BSEL1	CPU_BSEL0
166	0	1	1
200	0	1	0
266	0	0	0

49.9 25.5 29.9 25.5

Resistor placed within 0.5" of CPU pin.Trace should be at least 25 mils away from any other toggling signal. COMP[0,2] trace width is 18 mils. COMP[1,3] trace width is 4

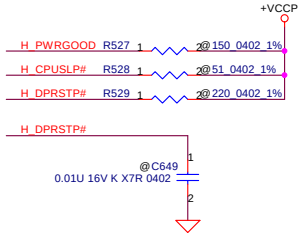

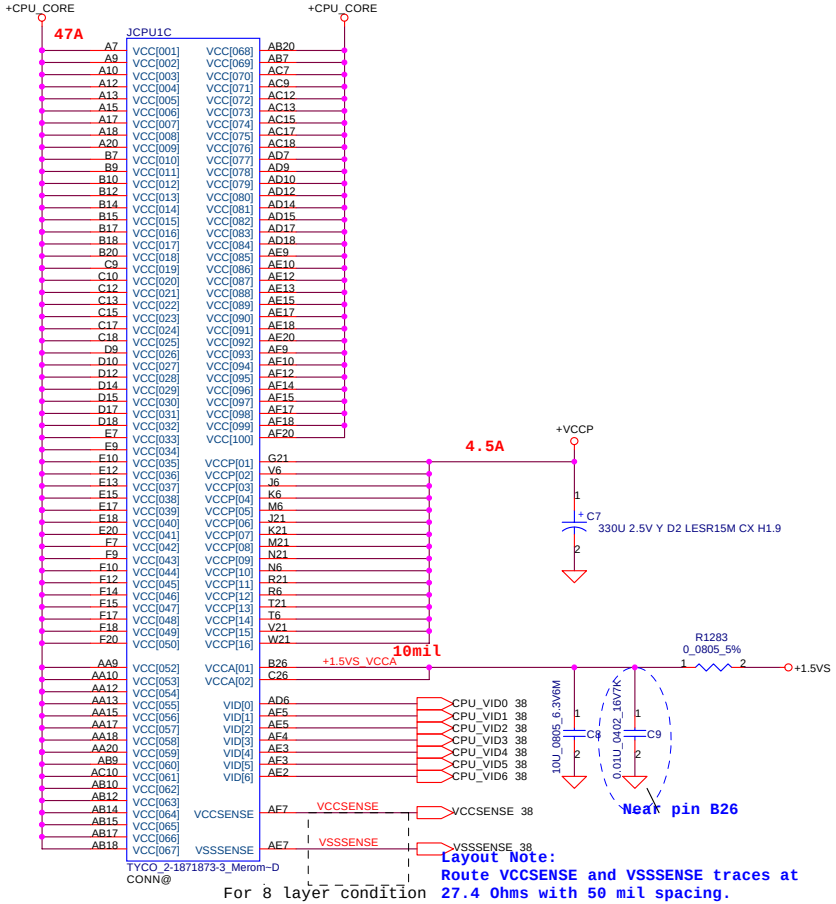

For 8 layer condition

Layout Note:
Route VCCSENSE and VSSSENSE traces at 27.4 Ohms with 50 mil spacing.

Length match within 25 mils.
The trace width/space/other is 20/7/25.

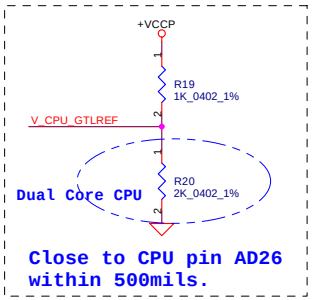

Close to CPU pin AD26 within 500mils.

For 6 layer
Z=27.4 ohm
VCCSENSE, VSSSENSE/ 14mils (MS), 16mils (SL) width, 7mils space, 25mils space to other signals Mismatch =25mils.

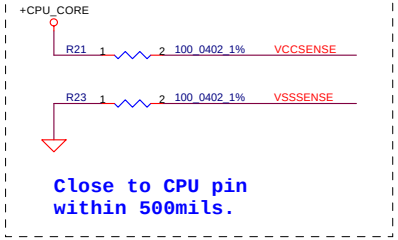

Close to CPU pin within 500mils.

Security Classification	Compal Secret Data		
Issued Date	2009/02/19	Deciphered Date	2009/12/31

THIS SHEET OF ENGINEERING DRAWING IS THE PROPRIETARY PROPERTY OF COMPAL ELECTRONICS, INC. AND CONTAINS CONFIDENTIAL AND TRADE SECRET INFORMATION. THIS SHEET MAY NOT BE TRANSFERED FROM THE CUSTODY OF THE COMPETENT DIVISION OF R&D DEPARTMENT EXCEPT AS AUTHORIZED BY COMPAL ELECTRONICS, INC. NEITHER THIS SHEET NOR THE INFORMATION IT CONTAINS MAY BE USED BY OR DISCLOSED TO ANY THIRD PARTY WITHOUT PRIOR WRITTEN CONSENT OF COMPAL ELECTRONICS, INC.

Compal Electronics, Inc.

Title: Penryn(2/3)-AGTL+/ITP-XDP

Size: Custom | Document Number: LA-4631P | Rev: 1.0

Date: Tuesday, February 24, 2009 | Sheet 5 of 42

Near CPU CORE regulator

ESR <= 1.5m ohm
Capacitor > 1980uF

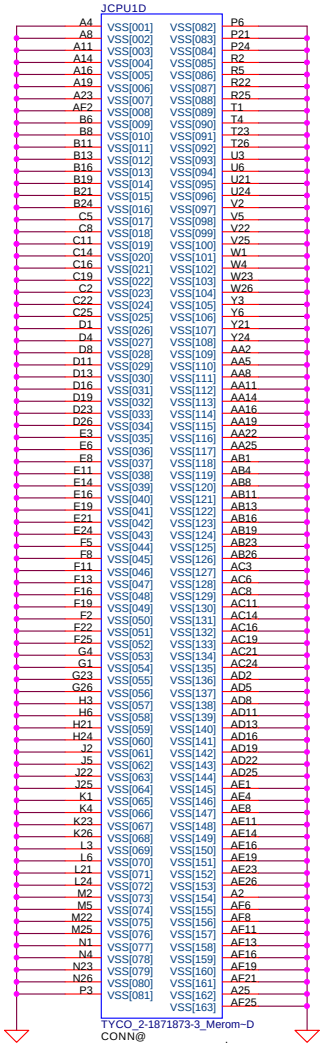

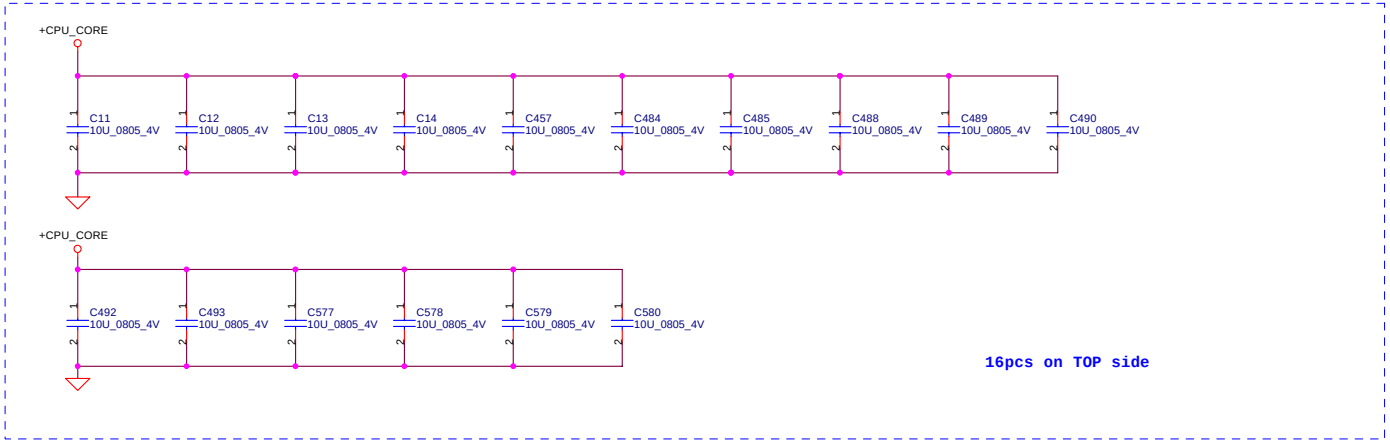

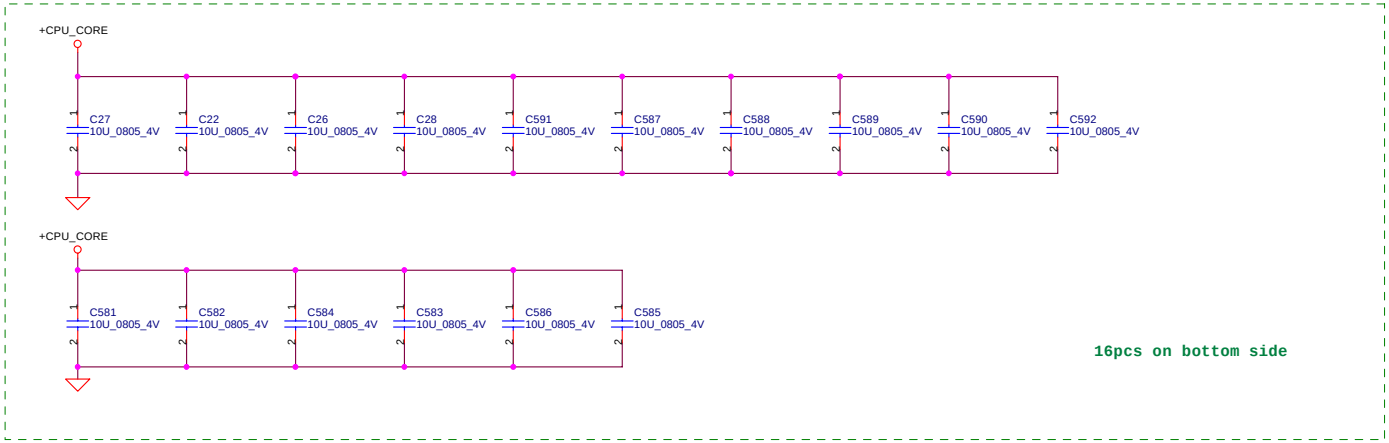

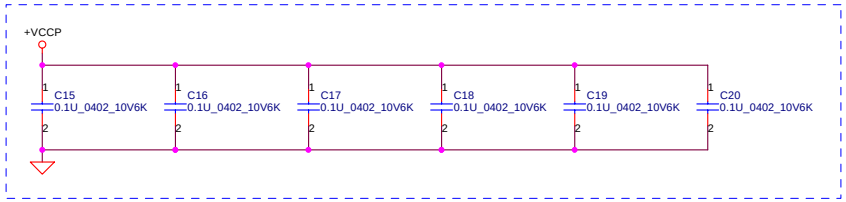

Place these caps inside the socket cavity on Bottom side. (North side Secondary)

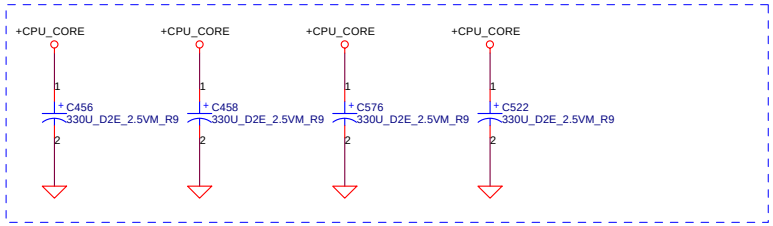

Security Classification	Compal Secret Data		
Issued Date	2009/02/19	Deciphered Date	2009/12/31

THIS SHEET OF ENGINEERING DRAWING IS THE PROPRIETARY PROPERTY OF COMPAL ELECTRONICS, INC. AND CONTAINS CONFIDENTIAL AND TRADE SECRET INFORMATION. THIS SHEET MAY NOT BE TRANSFERED FROM THE CUSTODY OF THE COMPETENT DIVISION OF R&D DEPARTMENT EXCEPT AS AUTHORIZED BY COMPAL ELECTRONICS, INC. NEITHER THIS SHEET NOR THE INFORMATION IT CONTAINS MAY BE USED BY OR DISCLOSED TO ANY THIRD PARTY WITHOUT PRIOR WRITTEN CONSENT OF COMPAL ELECTRONICS, INC.

Compal Electronics, Inc.

Title: **Penryn(3/3)-AGTL+/ITP-XDP**

Size: Custom | Document Number: *LA-4631P* | Rev: 1.0

Date: Thursday, February 19, 2009 | Sheet 6 of 42

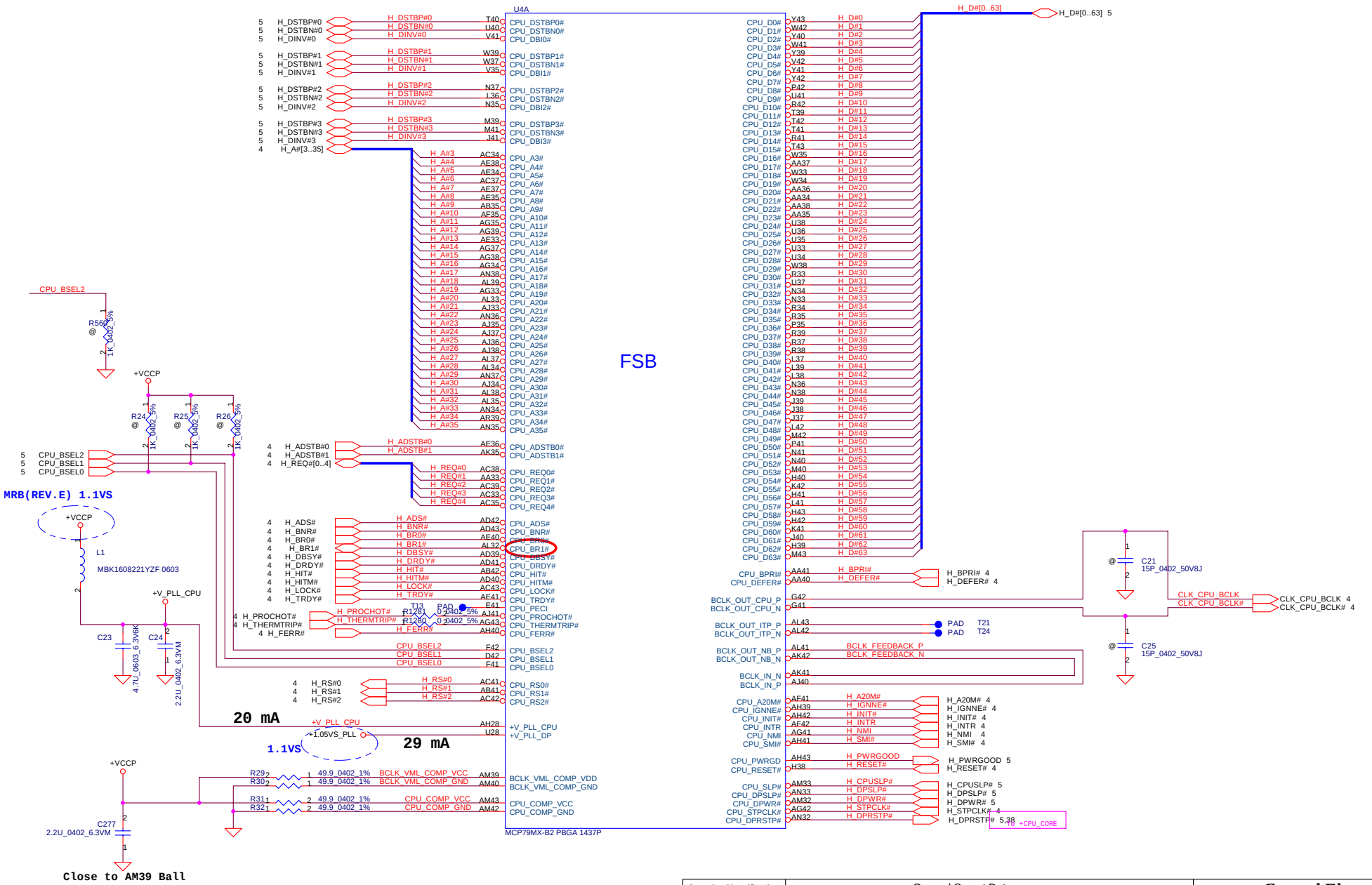

Security Classification	Compal Secret Data		
Issued Date	2009/02/19	Deciphered Date	2009/12/31

THIS SHEET OF ENGINEERING DRAWING IS THE PROPRIETARY PROPERTY OF COMPAL ELECTRONICS, INC. AND CONTAINS CONFIDENTIAL AND TRADE SECRET INFORMATION. THIS SHEET MAY NOT BE TRANSFERED FROM THE CUSTODY OF THE COMPETENT DIVISION OF R&D DEPARTMENT EXCEPT AS AUTHORIZED BY COMPAL ELECTRONICS, INC. NEITHER THIS SHEET NOR THE INFORMATION IT CONTAINS MAY BE USED BY OR DISCLOSED TO ANY THIRD PARTY WITHOUT PRIOR WRITTEN CONSENT OF COMPAL ELECTRONICS, INC.

Compal Electronics, Inc.

Title: **MCP79(1/10)-FRONT SIDE BUS**

Size	Document Number	Rev
	LA-4631P	1.0

Date: Tuesday, February 24, 2009 | Sheet 7 of 42

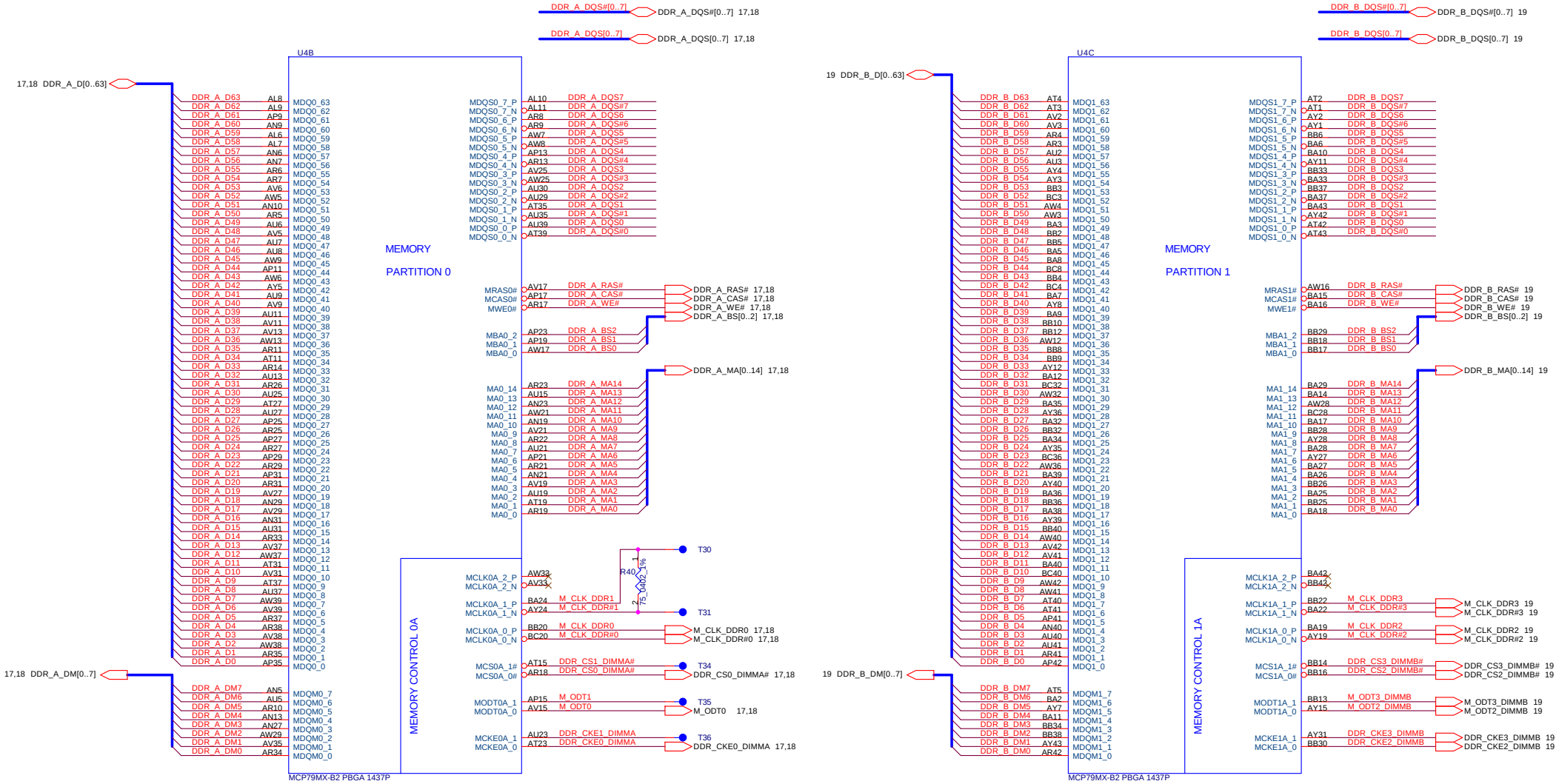

Security Classification	Compal Secret Data		
Issued Date	2009/02/19	Deciphered Date	2009/12/31

THIS SHEET OF ENGINEERING DRAWING IS THE PROPRIETARY PROPERTY OF COMPAL ELECTRONICS, INC. AND CONTAINS CONFIDENTIAL AND TRADE SECRET INFORMATION. THIS SHEET MAY NOT BE TRANSFERED FROM THE CUSTODY OF THE COMPETENT DIVISION OF R&D DEPARTMENT EXCEPT AS AUTHORIZED BY COMPAL ELECTRONICS, INC. NEITHER THIS SHEET NOR THE INFORMATION IT CONTAINS MAY BE USED BY OR DISCLOSED TO ANY THIRD PARTY WITHOUT PRIOR WRITTEN CONSENT OF COMPAL ELECTRONICS, INC.

Compal Electronics, Inc.

Title: **MCP79(2/10)-MEM PARTS 0 & 1**

Size	Document Number	Rev
	LA-4631P	1.0

Date: Tuesday, February 24, 2009 | Sheet 8 of 42

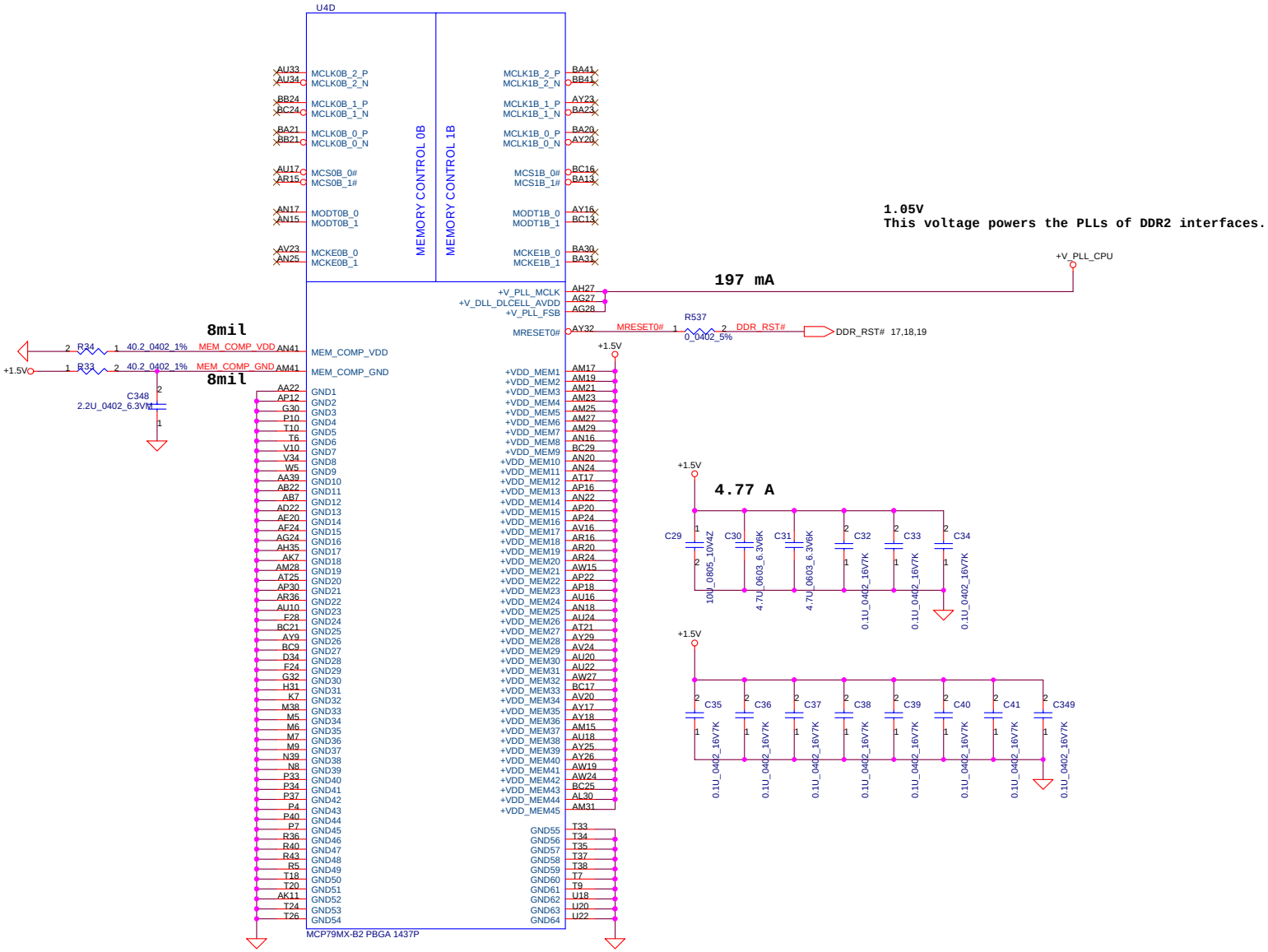

Security Classification	Compal Secret Data		
Issued Date	2009/02/19	Deciphered Date	2009/12/31

THIS SHEET OF ENGINEERING DRAWING IS THE PROPRIETARY PROPERTY OF COMPAL ELECTRONICS, INC. AND CONTAINS CONFIDENTIAL AND TRADE SECRET INFORMATION. THIS SHEET MAY NOT BE TRANSFERED FROM THE CUSTODY OF THE COMPETENT DIVISION OF R&D DEPARTMENT EXCEPT AS AUTHORIZED BY COMPAL ELECTRONICS, INC. NEITHER THIS SHEET NOR THE INFORMATION IT CONTAINS MAY BE USED BY OR DISCLOSED TO ANY THIRD PARTY WITHOUT PRIOR WRITTEN CONSENT OF COMPAL ELECTRONICS, INC.

Compal Electronics, Inc.

Title: **MCP79(3/10)-MEM CNTL 0B&1B**

Size	Document Number	Rev
	LA-4631P	1.0

Date: Tuesday, February 24, 2009 | Sheet 9 of 42

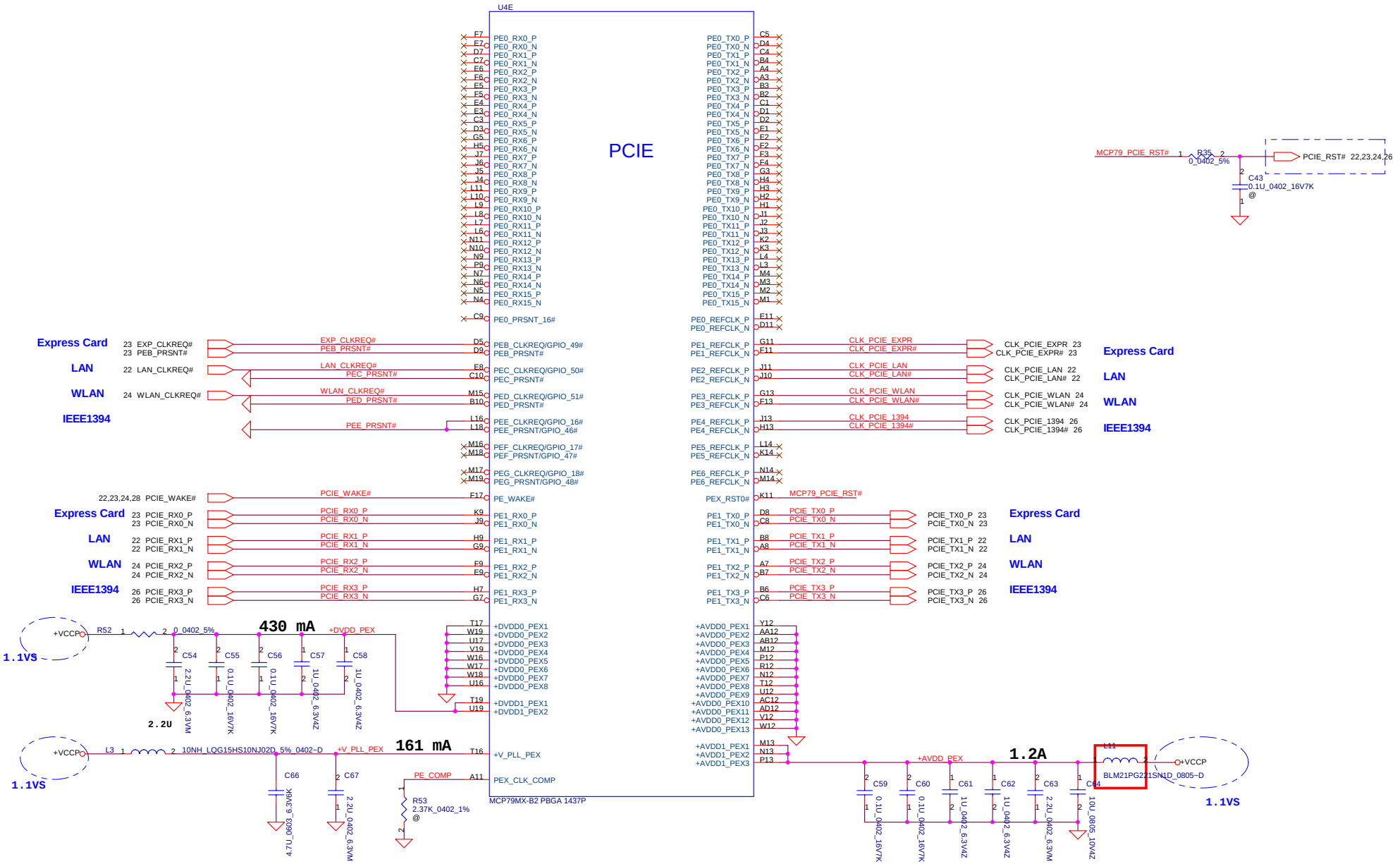

Security Classification	Compal Secret Data		
Issued Date	2009/02/19	Deciphered Date	2009/12/31

THIS SHEET OF ENGINEERING DRAWING IS THE PROPRIETARY PROPERTY OF COMPAL ELECTRONICS, INC. AND CONTAINS CONFIDENTIAL AND TRADE SECRET INFORMATION. THIS SHEET MAY NOT BE TRANSFERED FROM THE CUSTODY OF THE COMPETENT DIVISION OF R&D DEPARTMENT EXCEPT AS AUTHORIZED BY COMPAL ELECTRONICS, INC. NEITHER THIS SHEET NOR THE INFORMATION IT CONTAINS MAY BE USED BY OR DISCLOSED TO ANY THIRD PARTY WITHOUT PRIOR WRITTEN CONSENT OF COMPAL ELECTRONICS, INC.

Compal Electronics, Inc.

Title: **MCP79(4/10)-PCI EXPRESS**

Size | Document Number: **LA-4631P** | Rev: 1.0

Date: Tuesday, February 24, 2009 | Sheet 10 of 42

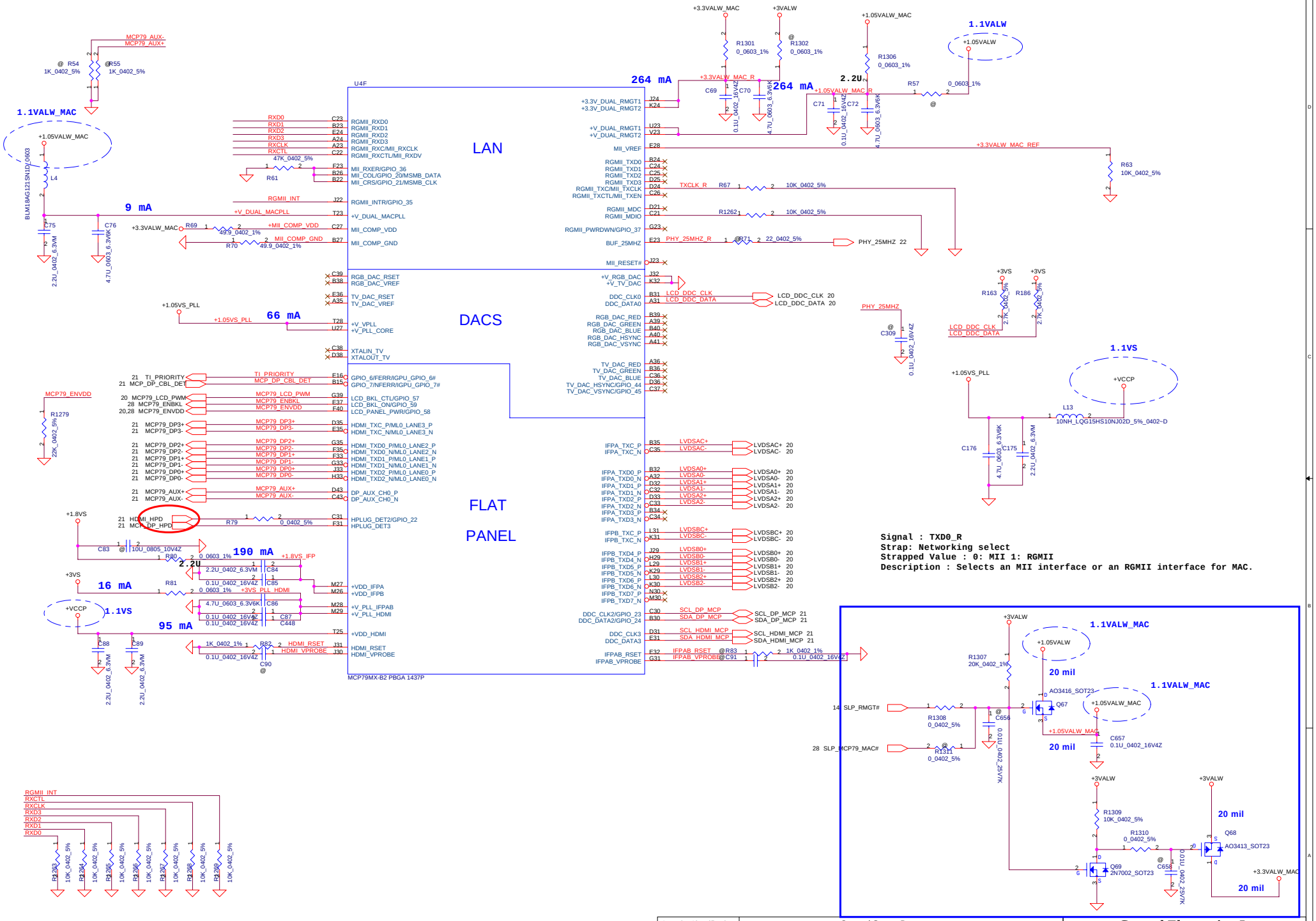

Security Classification	Compal Secret Data		
Issued Date	2009/02/19	Deciphered Date	2009/12/31

THIS SHEET OF ENGINEERING DRAWING IS THE PROPRIETARY PROPERTY OF COMPAL ELECTRONICS, INC. AND CONTAINS CONFIDENTIAL AND TRADE SECRET INFORMATION. THIS SHEET MAY NOT BE TRANSFERED FROM THE CUSTODY OF THE COMPETENT DIVISION OF R&D DEPARTMENT EXCEPT AS AUTHORIZED BY COMPAL ELECTRONICS, INC. NEITHER THIS SHEET NOR THE INFORMATION IT CONTAINS MAY BE USED BY OR DISCLOSED TO ANY THIRD PARTY WITHOUT PRIOR WRITTEN CONSENT OF COMPAL ELECTRONICS, INC.

Compal Electronics, Inc.

Title: MCP79(5/10)-LAN,RGB,TV,LVD

Size: | Document Number: LA-4631P | Rev: 1.0

Date: Tuesday, February 24, 2009 | Sheet 11 of 42

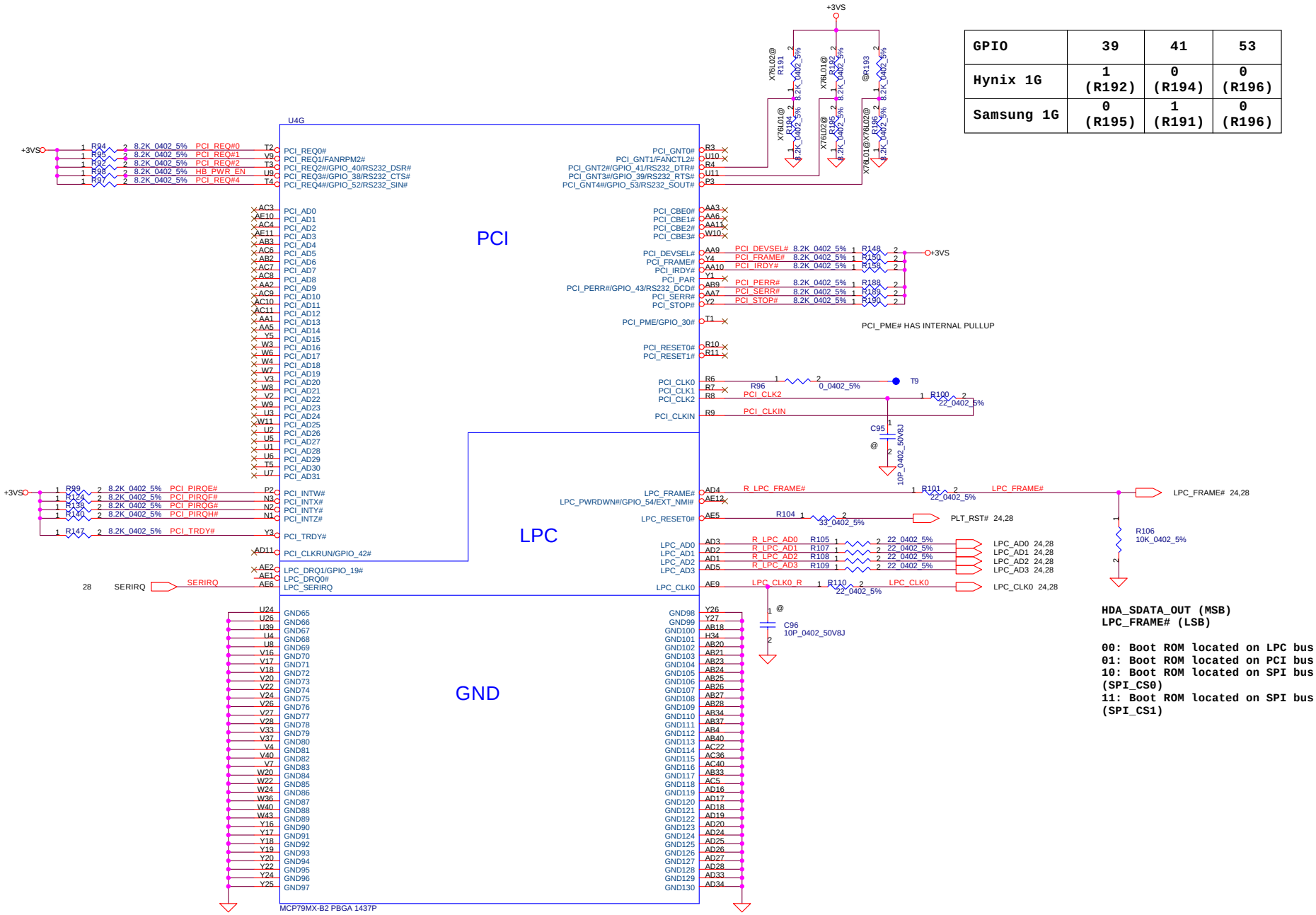

GPIO	39	41	53
Hynix 1G	1 (R192)	0 (R194)	0 (R196)
Samsung 1G	0 (R195)	1 (R191)	0 (R196)

HDA_SDATA_OUT (MSB)
LPC_FRAME# (LSB)

00: Boot ROM located on LPC bus
01: Boot ROM located on PCI bus
10: Boot ROM located on SPI bus (SPI_CS0)
11: Boot ROM located on SPI bus (SPI_CS1)

Security Classification	Compal Secret Data		
Issued Date	2009/02/19	Deciphered Date	2009/12/31

THIS SHEET OF ENGINEERING DRAWING IS THE PROPRIETARY PROPERTY OF COMPAL ELECTRONICS, INC. AND CONTAINS CONFIDENTIAL AND TRADE SECRET INFORMATION. THIS SHEET MAY NOT BE TRANSFERED FROM THE CUSTODY OF THE COMPETENT DIVISION OF R&D DEPARTMENT EXCEPT AS AUTHORIZED BY COMPAL ELECTRONICS, INC. NEITHER THIS SHEET NOR THE INFORMATION IT CONTAINS MAY BE USED BY OR DISCLOSED TO ANY THIRD PARTY WITHOUT PRIOR WRITTEN CONSENT OF COMPAL ELECTRONICS, INC.

Compal Electronics, Inc.

Title: MCP79(6/10)-PCI & LPC

Size | Document Number: LA-4631P | Rev 1.0

Date: Tuesday, February 24, 2009 | Sheet 12 of 42

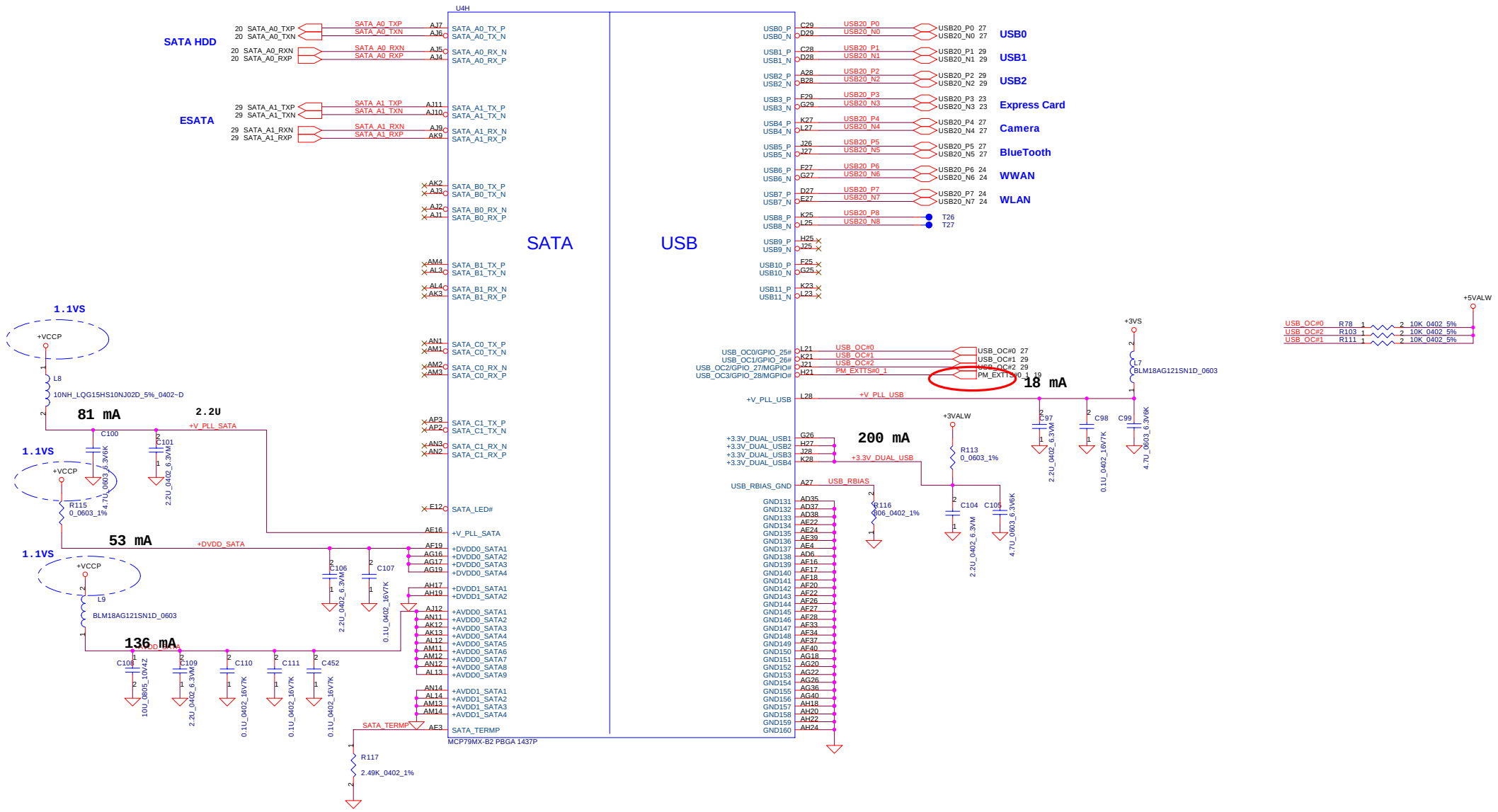

Security Classification	Compal Secret Data		
Issued Date	2009/02/19	Deciphered Date	2009/12/31

THIS SHEET OF ENGINEERING DRAWING IS THE PROPRIETARY PROPERTY OF COMPAL ELECTRONICS, INC. AND CONTAINS CONFIDENTIAL AND TRADE SECRET INFORMATION. THIS SHEET MAY NOT BE TRANSFERED FROM THE CUSTODY OF THE COMPETENT DIVISION OF R&D DEPARTMENT EXCEPT AS AUTHORIZED BY COMPAL ELECTRONICS, INC. NEITHER THIS SHEET NOR THE INFORMATION IT CONTAINS MAY BE USED BY OR DISCLOSED TO ANY THIRD PARTY WITHOUT PRIOR WRITTEN CONSENT OF COMPAL ELECTRONICS, INC.

Compal Electronics, Inc.

Title: **MCP79(7/10)-SATA & USB**

Size	Document Number	Rev
	LA-4631P	1.0

Date: Tuesday, February 24, 2009 | Sheet 13 of 42

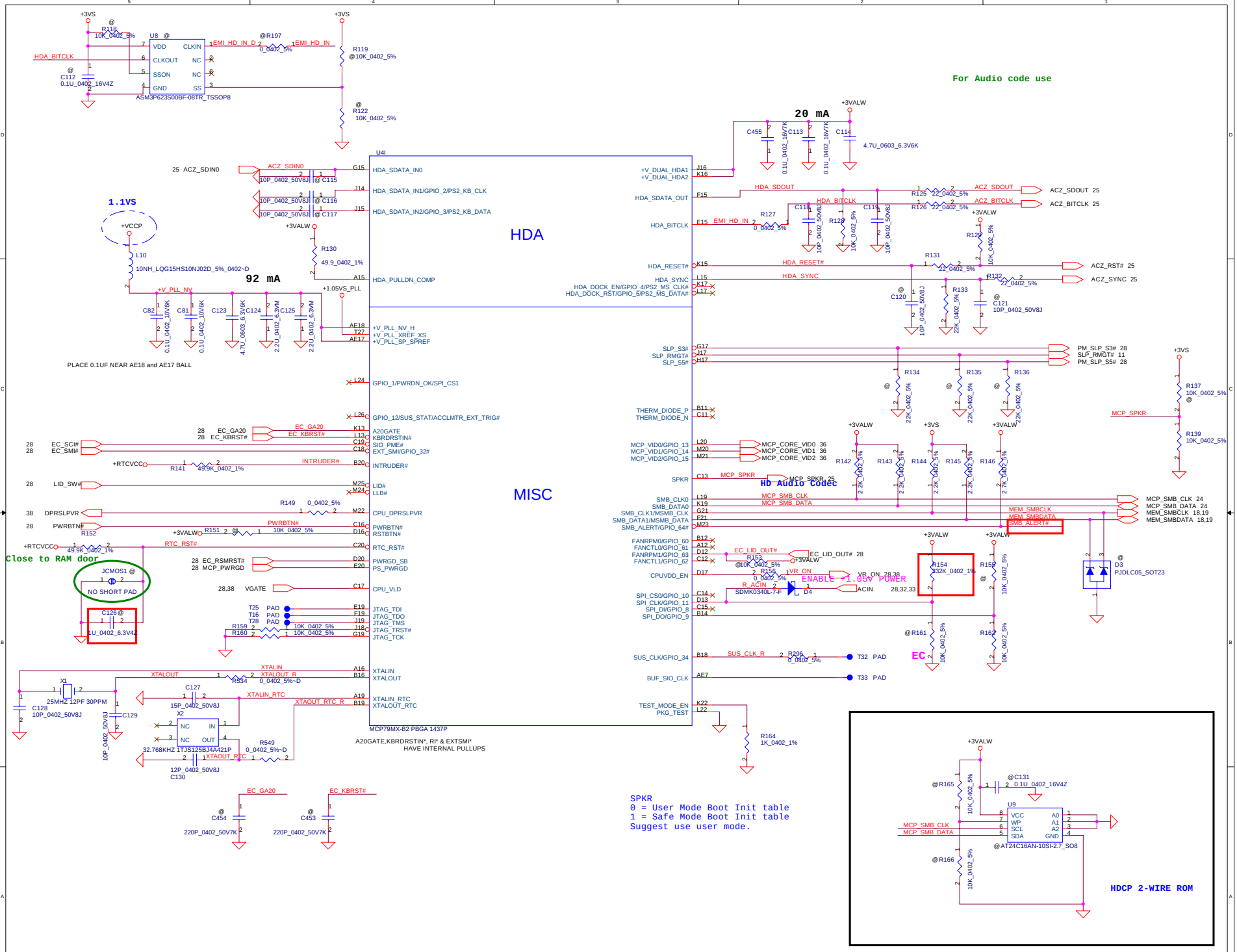

Security Classification	Compal Secret Data		
Issued Date	2009/02/19	Deciphered Date	2009/12/31

THIS SHEET OF ENGINEERING DRAWING IS THE PROPRIETARY PROPERTY OF COMPAL ELECTRONICS, INC. AND CONTAINS CONFIDENTIAL AND TRADE SECRET INFORMATION. THIS SHEET MAY NOT BE TRANSFERED FROM THE CUSTODY OF THE COMPETENT DIVISION OF R&D DEPARTMENT EXCEPT AS AUTHORIZED BY COMPAL ELECTRONICS, INC. NEITHER THIS SHEET NOR THE INFORMATION IT CONTAINS MAY BE USED BY OR DISCLOSED TO ANY THIRD PARTY WITHOUT PRIOR WRITTEN CONSENT OF COMPAL ELECTRONICS, INC.

Compal Electronics, Inc.

Title: MCP79(8/10)-HDA & MISC

Size: | Document Number: LA-4631P | Rev: 1.0

Date: Tuesday, February 24, 2009 | Sheet 14 of 42

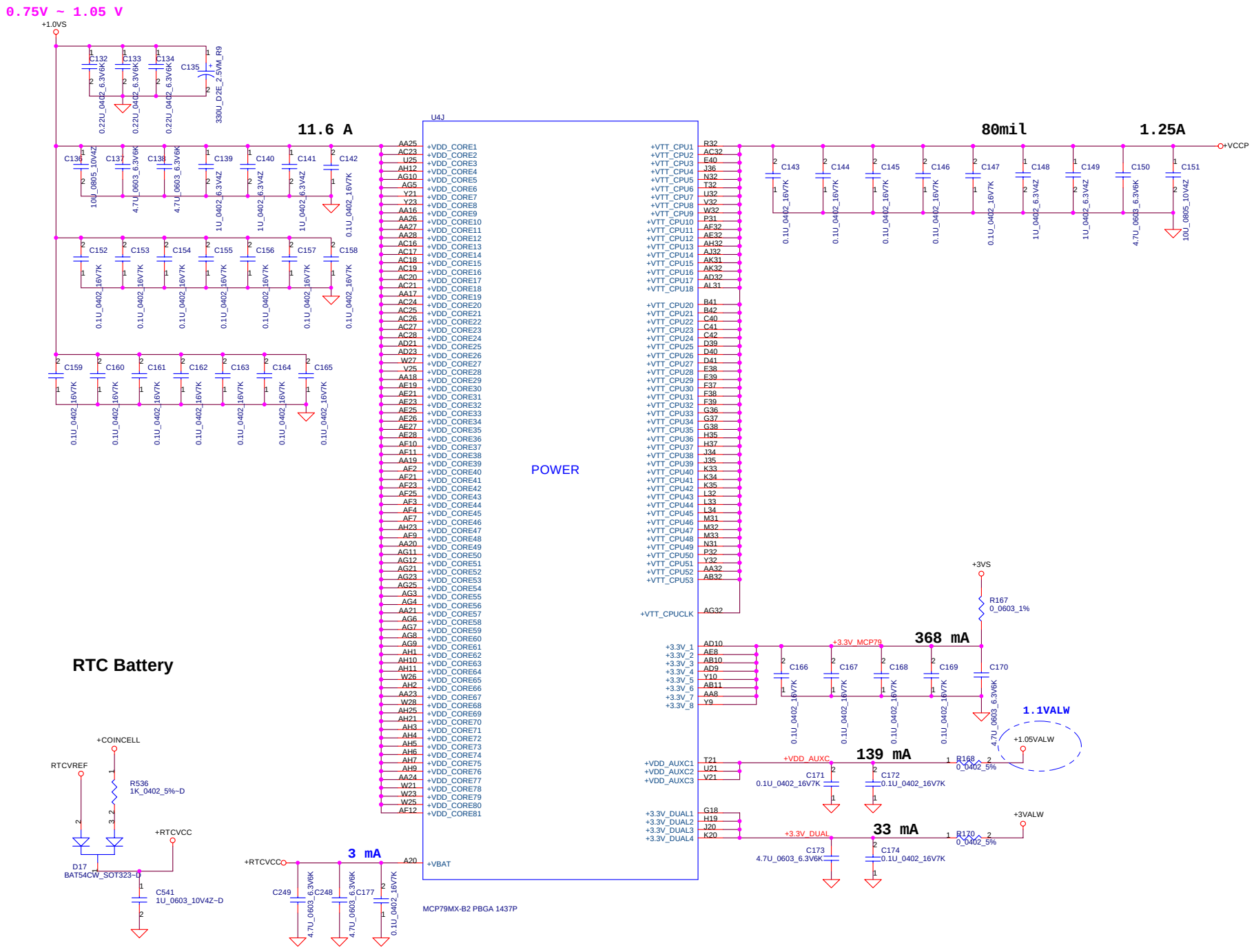

Security Classification	Compal Secret Data		
Issued Date	2009/02/19	Deciphered Date	2009/12/31

THIS SHEET OF ENGINEERING DRAWING IS THE PROPRIETARY PROPERTY OF COMPAL ELECTRONICS, INC. AND CONTAINS CONFIDENTIAL AND TRADE SECRET INFORMATION. THIS SHEET MAY NOT BE TRANSFERED FROM THE CUSTODY OF THE COMPETENT DIVISION OF R&D DEPARTMENT EXCEPT AS AUTHORIZED BY COMPAL ELECTRONICS, INC. NEITHER THIS SHEET NOR THE INFORMATION IT CONTAINS MAY BE USED BY OR DISCLOSED TO ANY THIRD PARTY WITHOUT PRIOR WRITTEN CONSENT OF COMPAL ELECTRONICS, INC.

Compal Electronics, Inc.

Title: MCP79(9/10)-POWER&RTC Batt

Size | Document Number: LA-4631P | Rev: 1.0

Date: Thursday, February 19, 2009 | Sheet 15 of 42

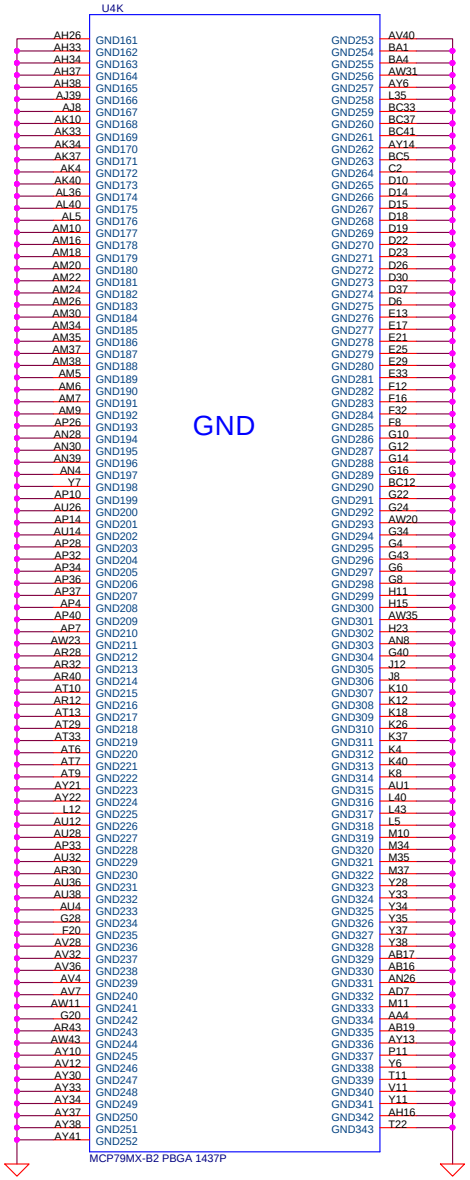

Security Classification	Compal Secret Data		
Issued Date	2009/02/19	Deciphered Date	2009/12/31

THIS SHEET OF ENGINEERING DRAWING IS THE PROPRIETARY PROPERTY OF COMPAL ELECTRONICS, INC. AND CONTAINS CONFIDENTIAL AND TRADE SECRET INFORMATION. THIS SHEET MAY NOT BE TRANSFERED FROM THE CUSTODY OF THE COMPETENT DIVISION OF R&D DEPARTMENT EXCEPT AS AUTHORIZED BY COMPAL ELECTRONICS, INC. NEITHER THIS SHEET NOR THE INFORMATION IT CONTAINS MAY BE USED BY OR DISCLOSED TO ANY THIRD PARTY WITHOUT PRIOR WRITTEN CONSENT OF COMPAL ELECTRONICS, INC.

Compal Electronics, Inc.

Title: **MCP79(10/10)-GND**

Size	Document Number	Rev
	LA-4631P	1.0

Date: Thursday, February 19, 2009 | Sheet 16 of 42

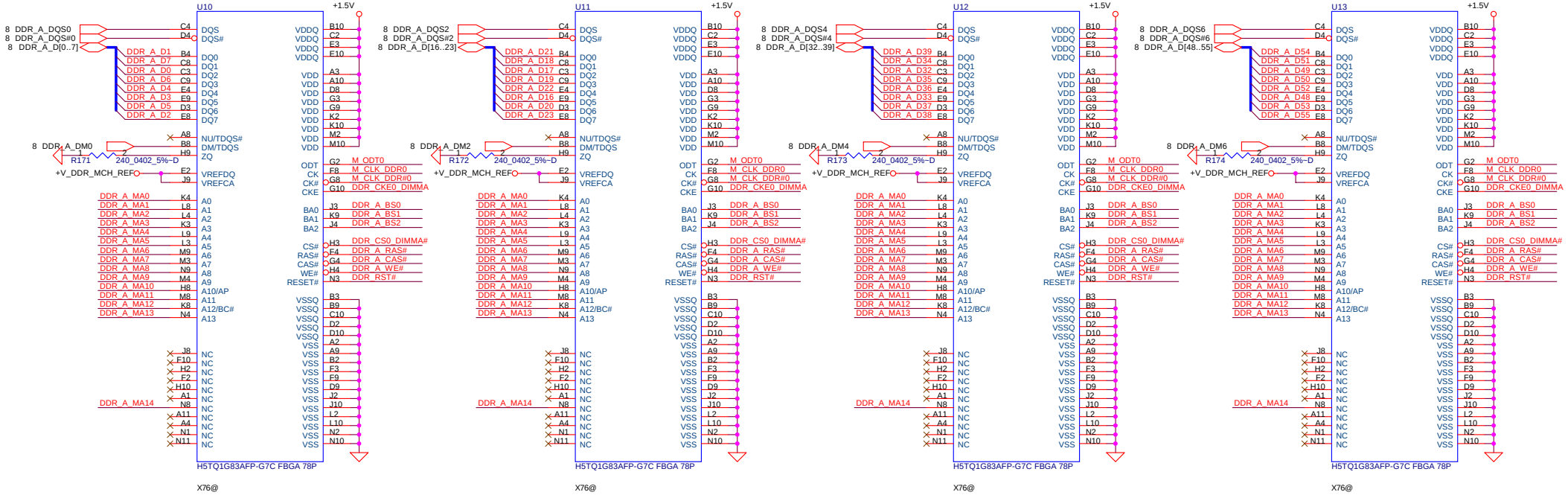

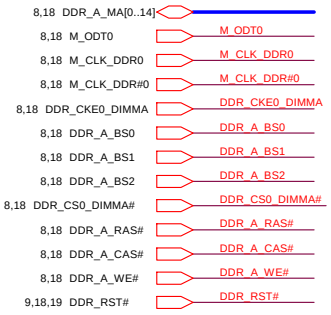

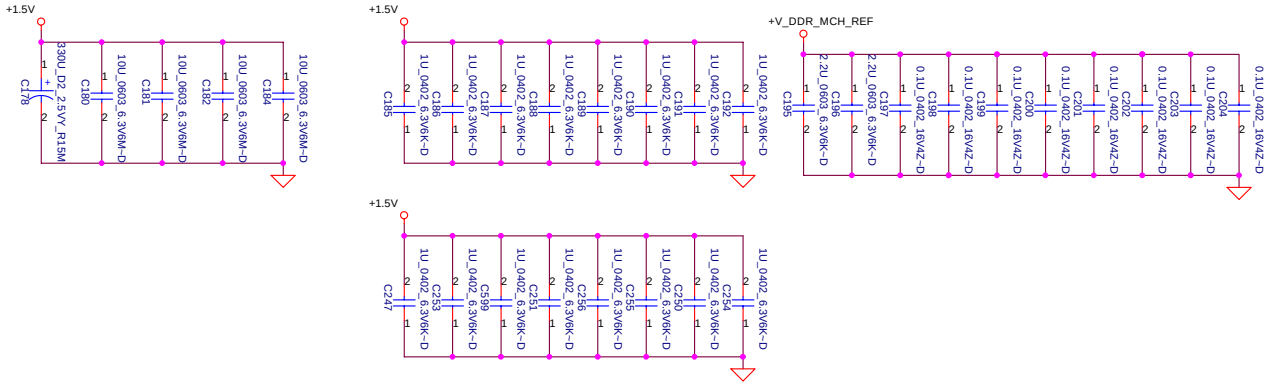

Place close to MEM **Place the end of the DDR3**

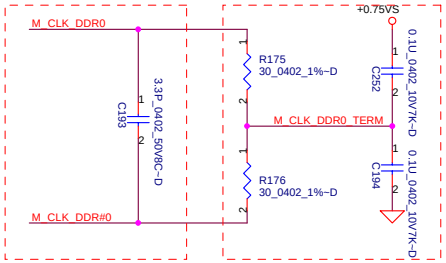

Second MAIN	Vendor	Package	
	Samsung	(9*11)	Samsung DDR3(1066): SA00002L60L (K4B1G0846D-HCF8 FBGA 82P)
	Hynix	(8*11.5)	Hynix DDR3 (1066): SA00002PO0L (H5TQ1G83AFP-G7C FBGA 78P)

DELL CONFIDENTIAL/PROPRIETARY

PROPRIETARY NOTE: THIS SHEET OF ENGINEERING DRAWING AND SPECIFICATIONS CONTAINS CONFIDENTIAL TRADE SECRET AND OTHER PROPRIETARY INFORMATION OF DELL INC. ("DELL") THIS DOCUMENT MAY NOT BE TRANSFERRED OR COPIED WITHOUT THE EXPRESS WRITTEN AUTHORIZATION OF DELL. IN ADDITION, NEITHER THIS SHEET NOR THE INFORMATION IT CONTAINS WAY BE USED BY OR DISCLOSED TO ANY THIRD PARTY WITHOUT DELL'S EXPRESS WRITTEN CONSENT.

Compal Electronics, Inc.

Title: DDRIII-Memory Down (Top)

Size: | Document Number: LA-4631P | Rev: 1.0

Date: Tuesday, February 24, 2009 | Sheet 17 of 42

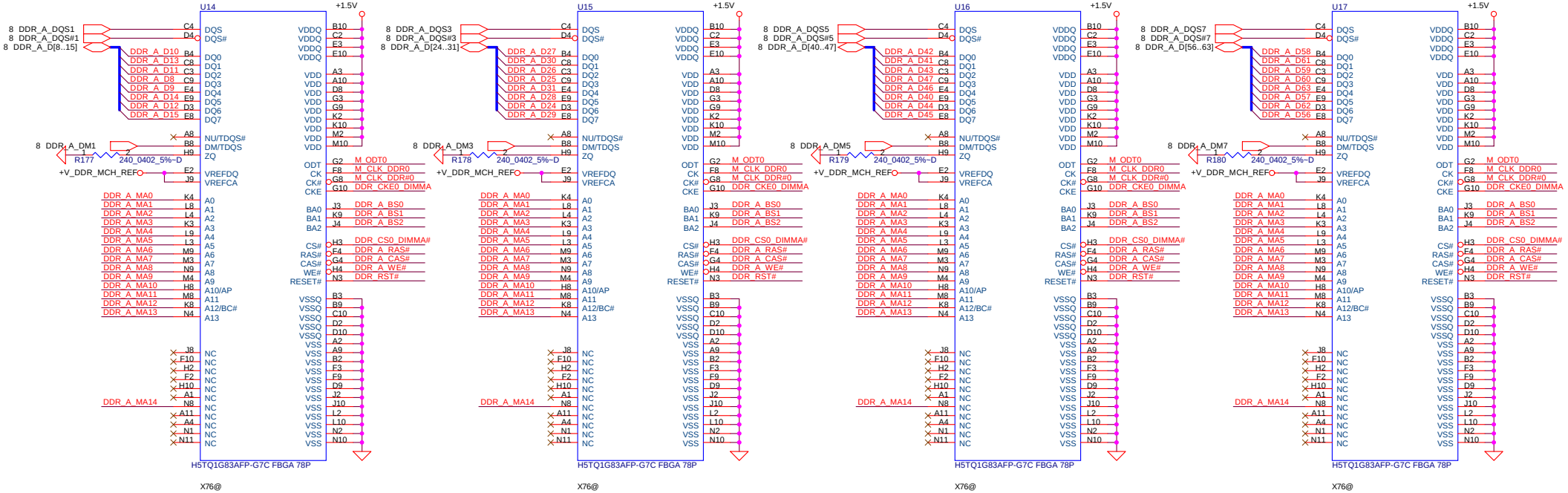

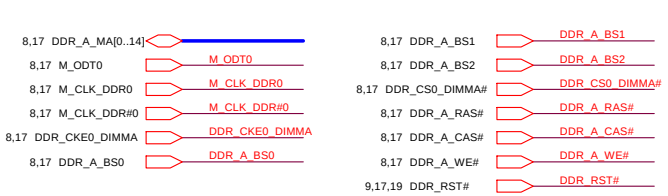

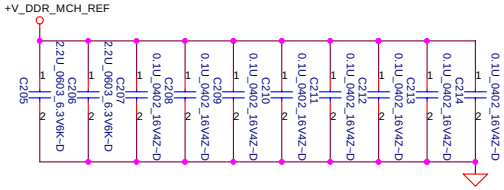

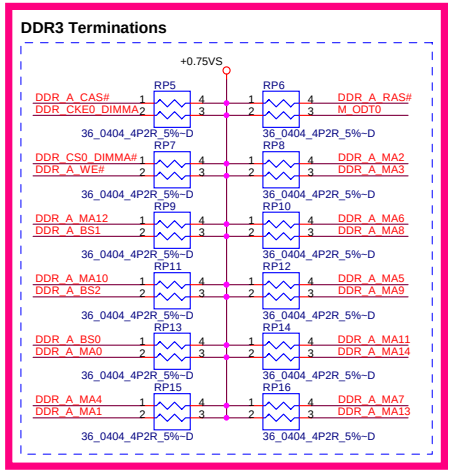

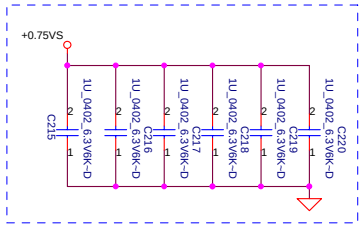

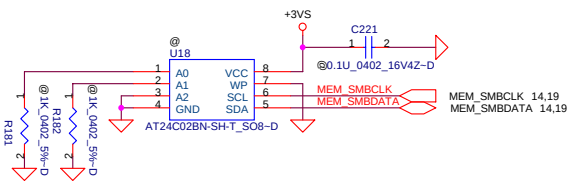

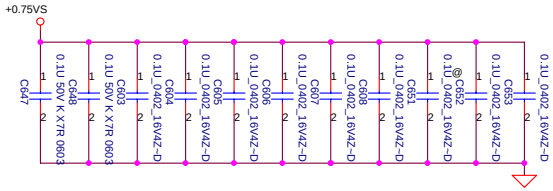

Place decaps close end termination resistors, one decap for 4 resistors

DELL CONFIDENTIAL/PROPRIETARY

PROPRIETARY NOTE: THIS SHEET OF ENGINEERING DRAWING AND SPECIFICATIONS CONTAINS CONFIDENTIAL TRADE SECRET AND OTHER PROPRIETARY INFORMATION OF DELL INC. ("DELL") THIS DOCUMENT MAY NOT BE TRANSFERRED OR COPIED WITHOUT THE EXPRESS WRITTEN AUTHORIZATION OF DELL. IN ADDITION, NEITHER THIS SHEET NOR THE INFORMATION IT CONTAINS WAY BE USED BY OR DISCLOSED TO ANY THIRD PARTY WITHOUT DELL'S EXPRESS WRITTEN CONSENT.

Compal Electronics, Inc.	
Title	DDRIII-Memory Down (Bottom)
Size	Document Number: LA-4631P
Rev	1.0
Date: Tuesday, February 24, 2009	Sheet 18 of 42

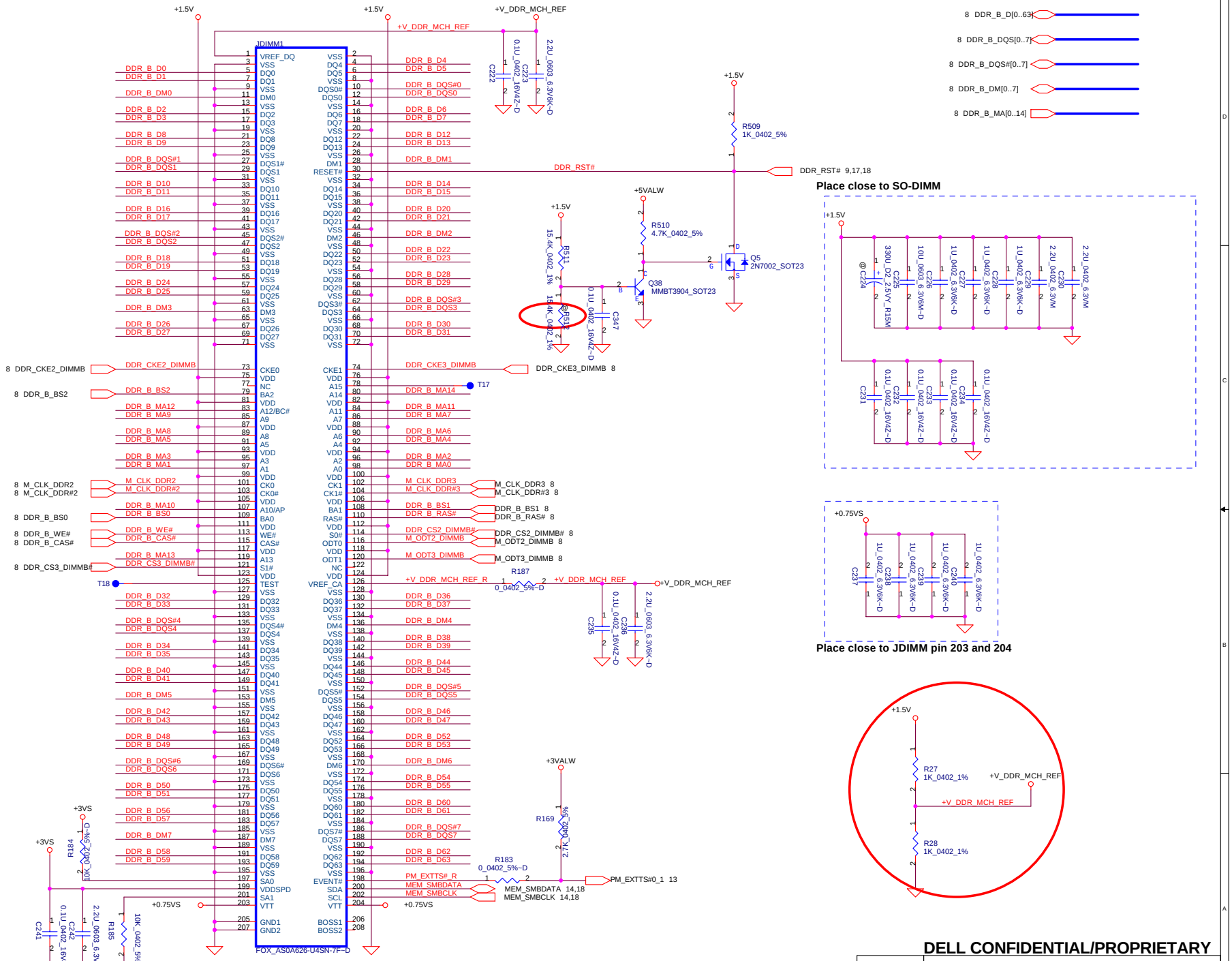

DDR3 SO-DIMM/Standard Type

PROPRIETARY NOTE: THIS SHEET OF ENGINEERING DRAWING AND SPECIFICATIONS CONTAINS CONFIDENTIAL TRADE SECRET AND OTHER PROPRIETARY INFORMATION OF DELL INC. ("DELL") THIS DOCUMENT MAY NOT BE TRANSFERRED OR COPIED WITHOUT THE EXPRESS WRITTEN AUTHORIZATION OF DELL. IN ADDITION, NEITHER THIS SHEET NOR THE INFORMATION IT CONTAINS WAY BE USED BY OR DISCLOSED TO ANY THIRD PARTY WITHOUT DELL'S EXPRESS WRITTEN CONSENT.

DELL CONFIDENTIAL/PROPRIETARY

Compal Electronics, Inc.

Title: DDRIII SO-DIMM SLOT

Size | Document Number: LA-4631P | Rev: 1.0

Date: Tuesday, February 24, 2009 | Sheet 19 of 42

LCD

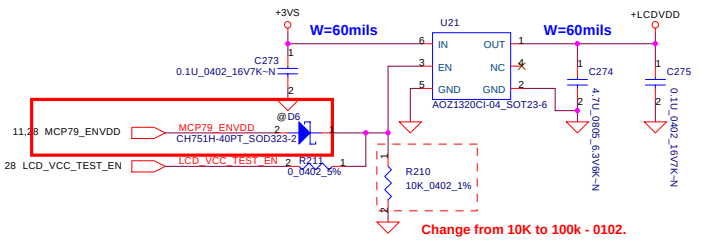

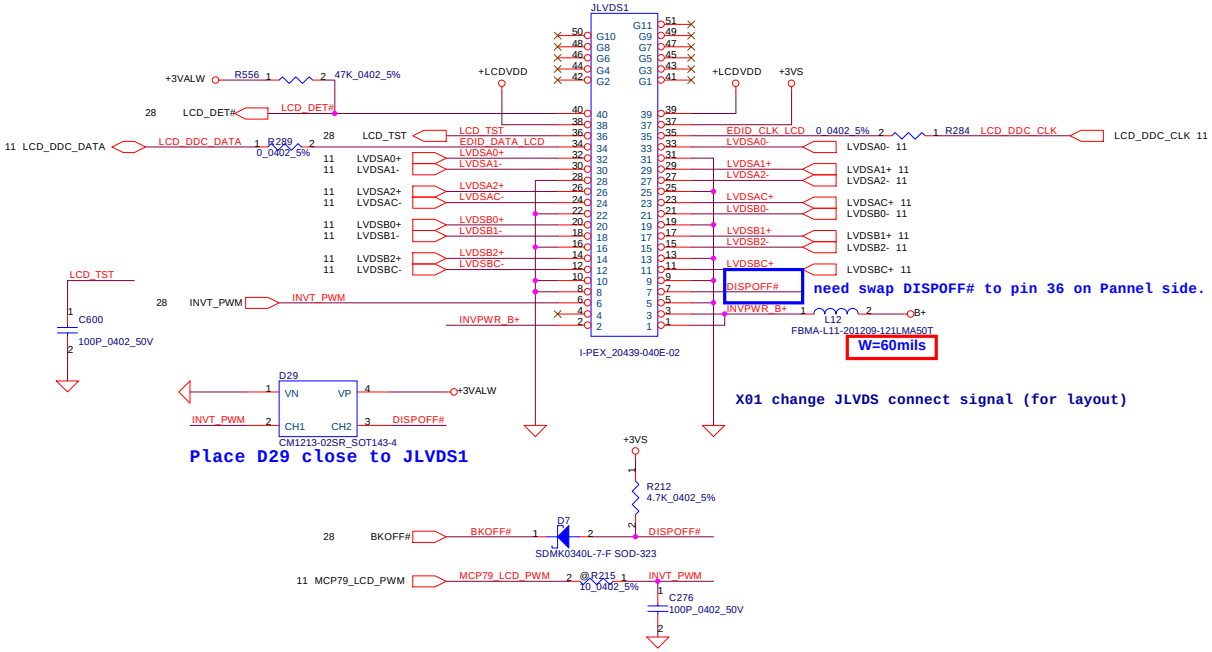

SATA HDD

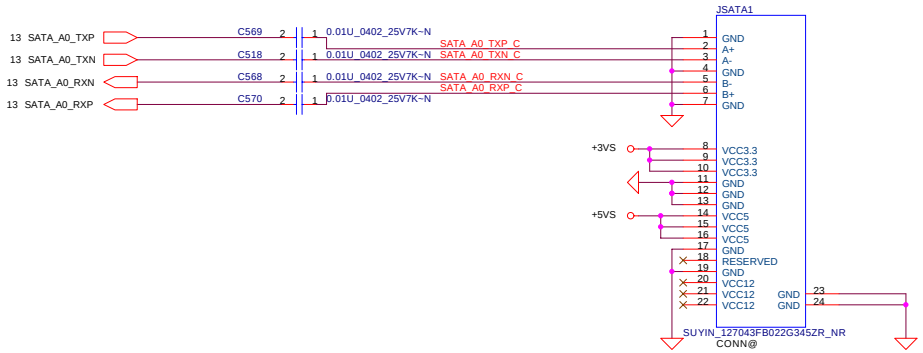

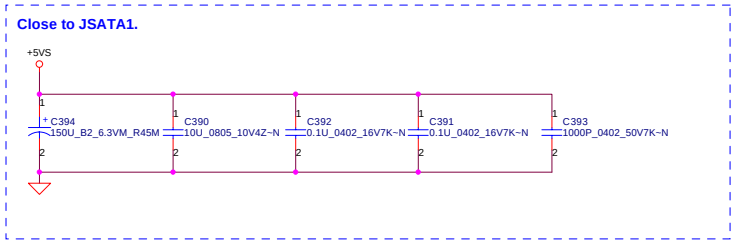

Security Classification	Compal Secret Data		
Issued Date	2009/02/19	Deciphered Date	2009/12/31

THIS SHEET OF ENGINEERING DRAWING IS THE PROPRIETARY PROPERTY OF COMPAL ELECTRONICS, INC. AND CONTAINS CONFIDENTIAL AND TRADE SECRET INFORMATION. THIS SHEET MAY NOT BE TRANSFERED FROM THE CUSTODY OF THE COMPETENT DIVISION OF R&D DEPARTMENT EXCEPT AS AUTHORIZED BY COMPAL ELECTRONICS, INC. NEITHER THIS SHEET NOR THE INFORMATION IT CONTAINS MAY BE USED BY OR DISCLOSED TO ANY THIRD PARTY WITHOUT PRIOR WRITTEN CONSENT OF COMPAL ELECTRONICS, INC.

Compal Electronics, Inc.

Title: **LCD/SATA HDD**

Size: Custom | Document Number: **LA-4631P** | Rev: 1.0

Date: Tuesday, February 24, 2009 | Sheet 20 of 42

HDMI Connector

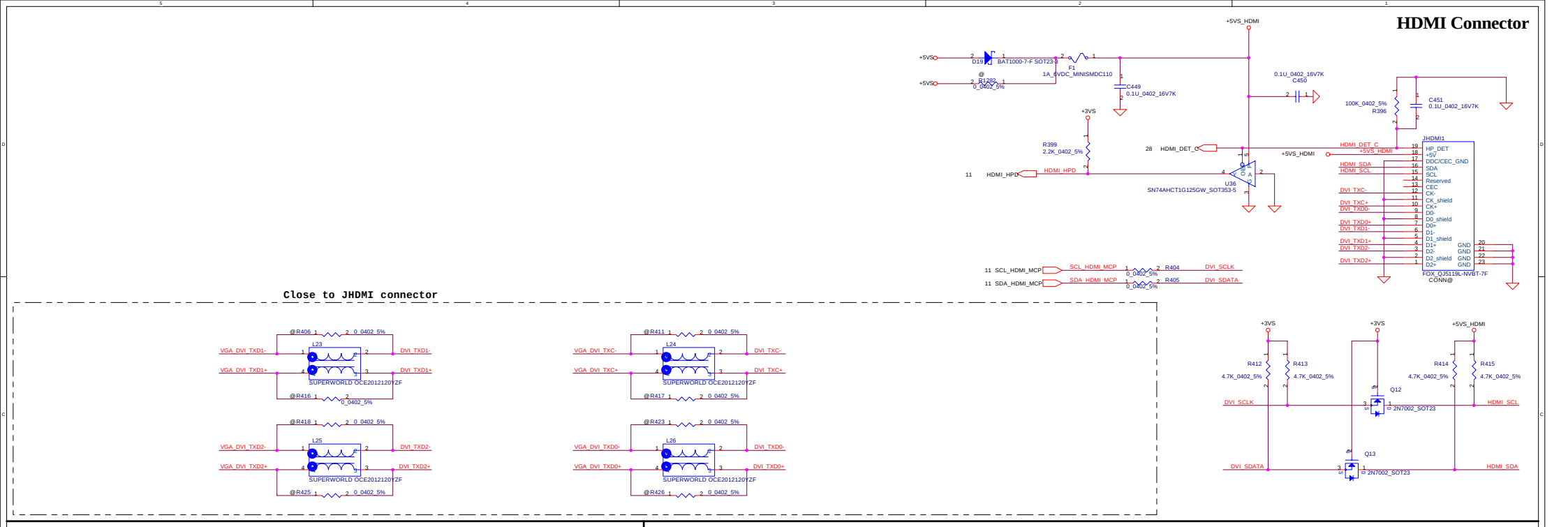

DisplayPort/TMDS 1:2 Switch/Translator

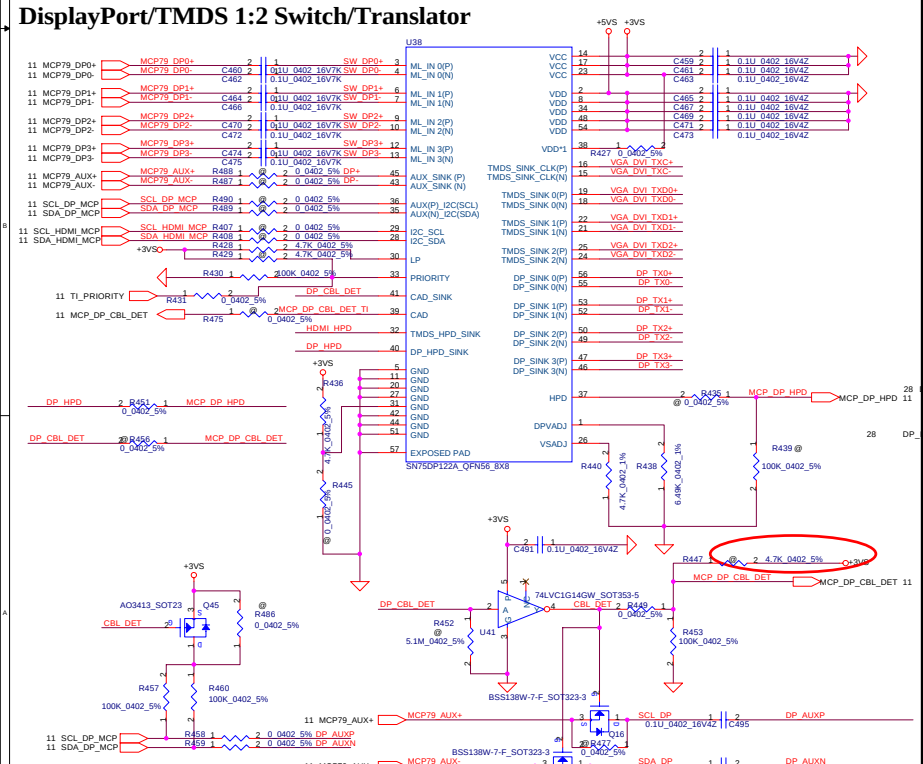

DisplayPort Connector

Close to JDP connector

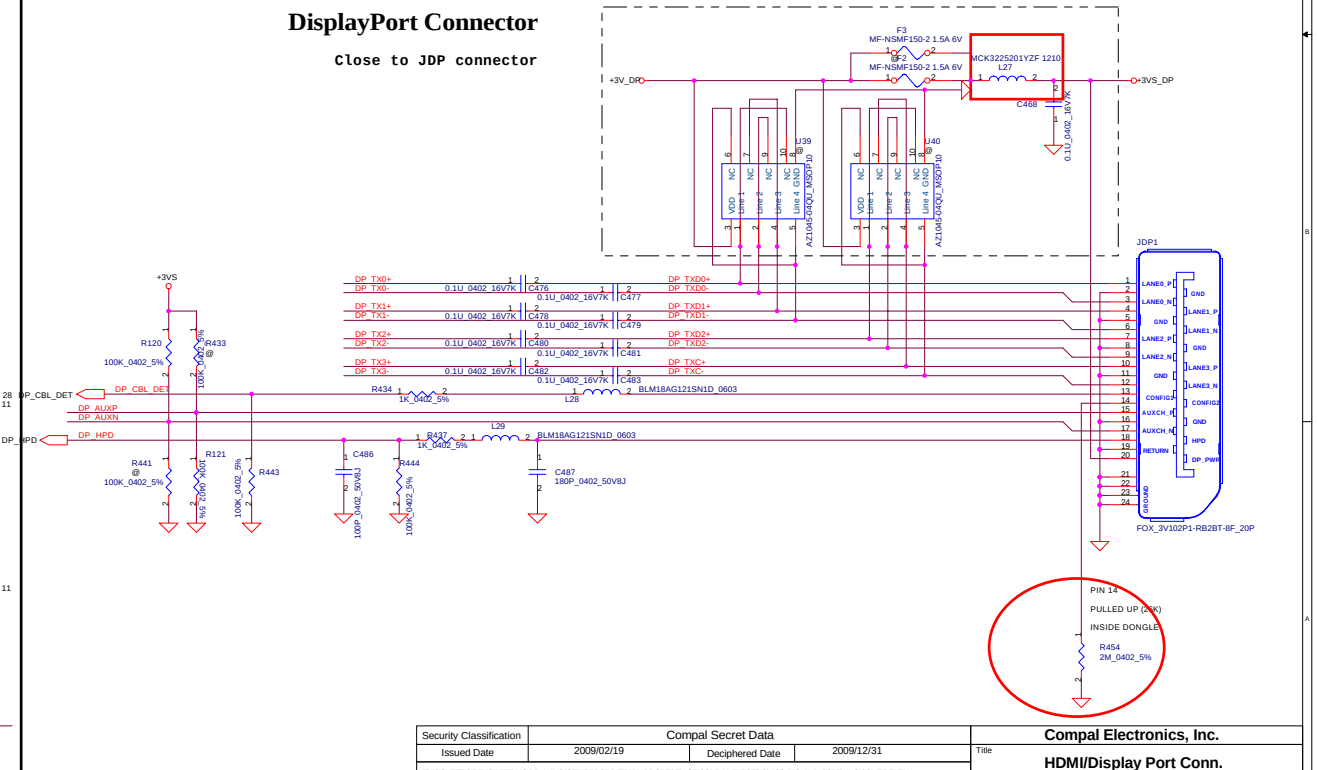

Security Classification	Compal Secret Data		
Issued Date	2009/02/19	Deciphered Date	2009/12/31

THIS SHEET OF ENGINEERING DRAWING IS THE PROPRIETARY PROPERTY OF COMPAL ELECTRONICS, INC. AND CONTAINS CONFIDENTIAL AND TRADE SECRET INFORMATION. THIS SHEET MAY NOT BE TRANSFERED FROM THE CUSTODY OF THE COMPETENT DIVISION OF R&D DEPARTMENT EXCEPT AS AUTHORIZED BY COMPAL ELECTRONICS, INC. NEITHER THIS SHEET NOR THE INFORMATION IT CONTAINS MAY BE USED BY OR DISCLOSED TO ANY THIRD PARTY WITHOUT PRIOR WRITTEN CONSENT OF COMPAL ELECTRONICS, INC.

Compal Electronics, Inc.

Title: **HDMI/Display Port Conn.**

Size	Document Number	Rev
Custom	LA-4631P	1.0

Date: Tuesday, February 24, 2009 | Sheet 21 of 42

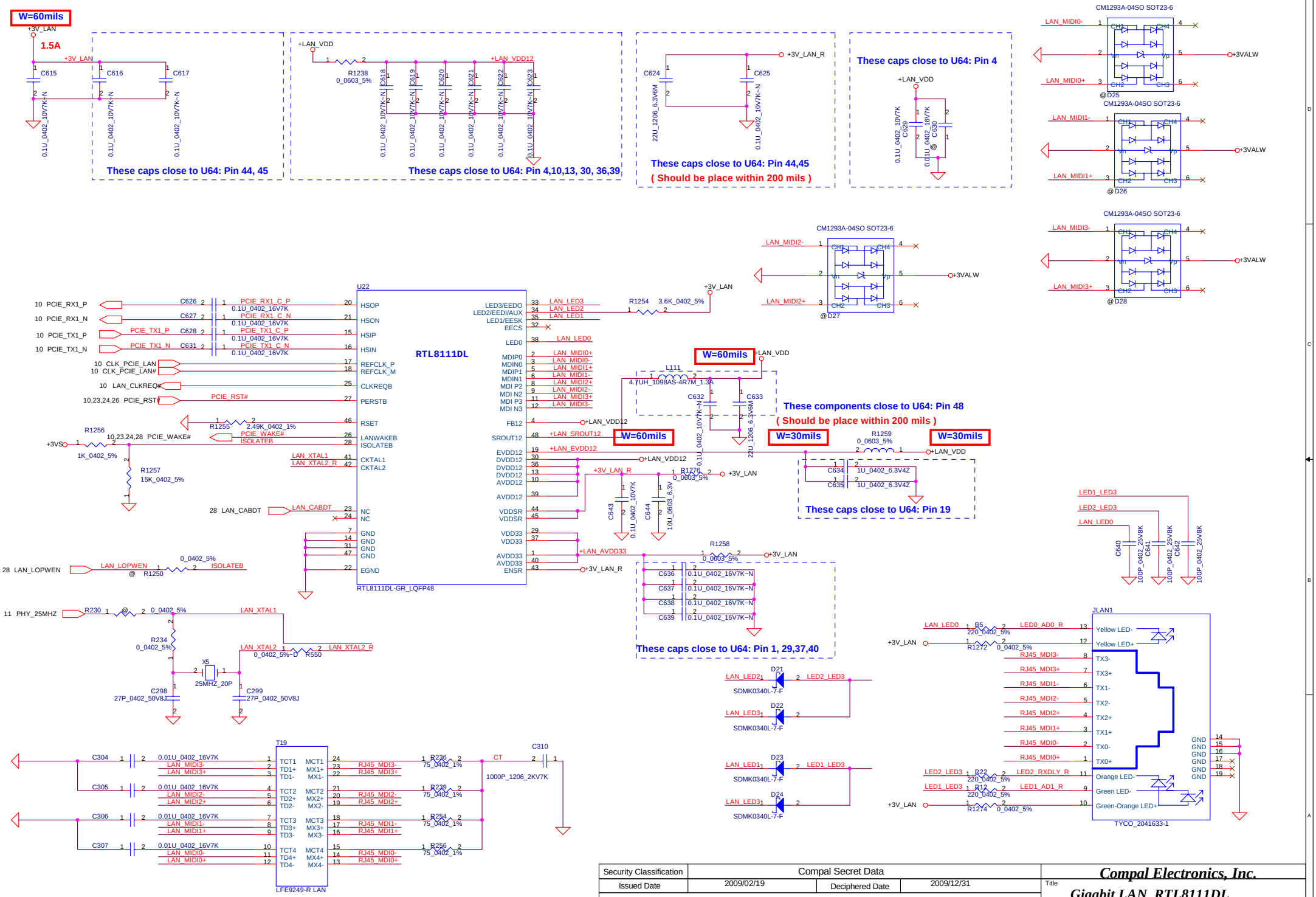

Security Classification	Compal Secret Data		
Issued Date	2009/02/19	Deciphered Date	2009/12/31

THIS SHEET OF ENGINEERING DRAWING IS THE PROPRIETARY PROPERTY OF COMPAL ELECTRONICS, INC. AND CONTAINS CONFIDENTIAL AND TRADE SECRET INFORMATION. THIS SHEET MAY NOT BE TRANSFERED FROM THE CUSTODY OF THE COMPETENT DIVISION OF R&D DEPARTMENT EXCEPT AS AUTHORIZED BY COMPAL ELECTRONICS, INC. NEITHER THIS SHEET NOR THE INFORMATION IT CONTAINS MAY BE USED BY OR DISCLOSED TO ANY THIRD PARTY WITHOUT PRIOR WRITTEN CONSENT OF COMPAL ELECTRONICS, INC.

Compal Electronics, Inc.

Title: **Gigabit LAN_RTL8111DL**

Size: Custom | Document Number: **LA-4631P** | Rev: 1.0

Date: Tuesday, February 24, 2009 | Sheet 22 of 42

Express Card Power Switch

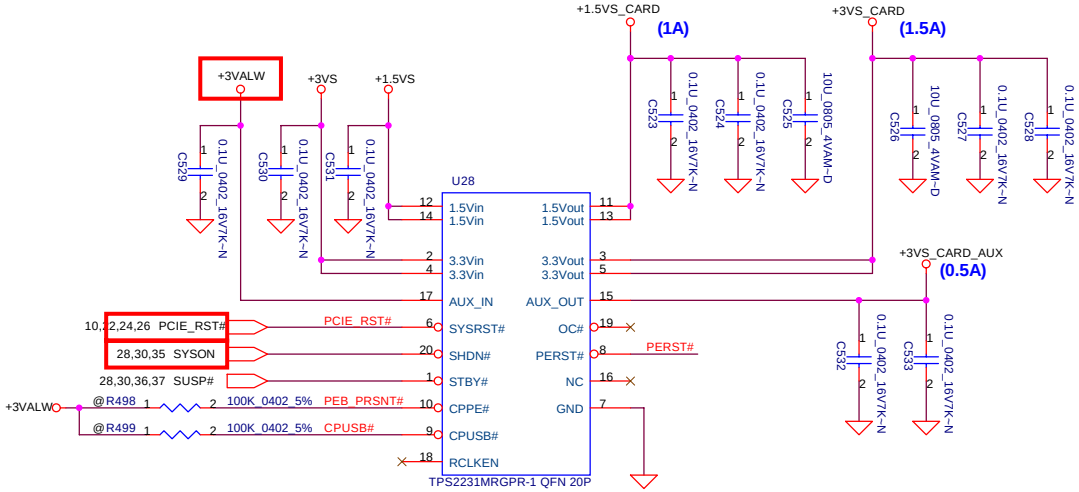

Express Card

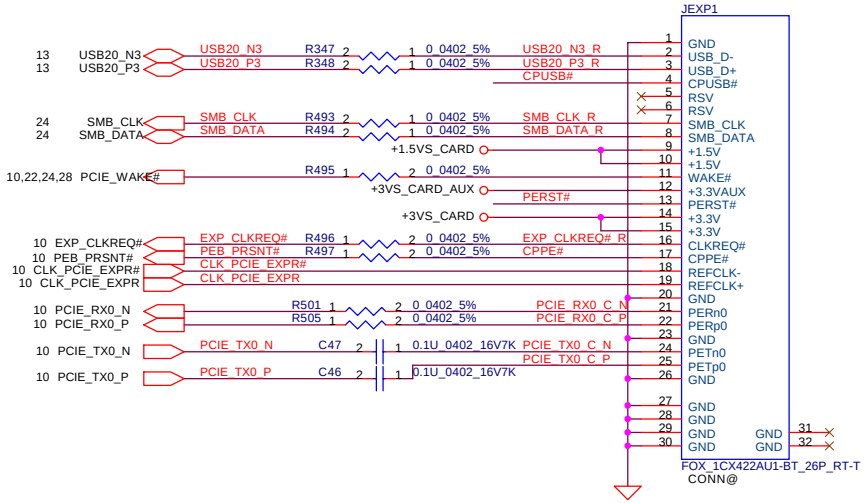

Security Classification	Compal Secret Data		
Issued Date	2009/02/19	Deciphered Date	2009/12/31

THIS SHEET OF ENGINEERING DRAWING IS THE PROPRIETARY PROPERTY OF COMPAL ELECTRONICS, INC. AND CONTAINS CONFIDENTIAL AND TRADE SECRET INFORMATION. THIS SHEET MAY NOT BE TRANSFERED FROM THE CUSTODY OF THE COMPETENT DIVISION OF R&D DEPARTMENT EXCEPT AS AUTHORIZED BY COMPAL ELECTRONICS, INC. NEITHER THIS SHEET NOR THE INFORMATION IT CONTAINS MAY BE USED BY OR DISCLOSED TO ANY THIRD PARTY WITHOUT PRIOR WRITTEN CONSENT OF COMPAL ELECTRONICS, INC.

Compal Electronics, Inc.

Title: **Express Card**

Size: Custom | Document Number: **LA-4631P** | Rev: 1.0

Date: Tuesday, February 24, 2009 | Sheet 23 of 42

WLAN

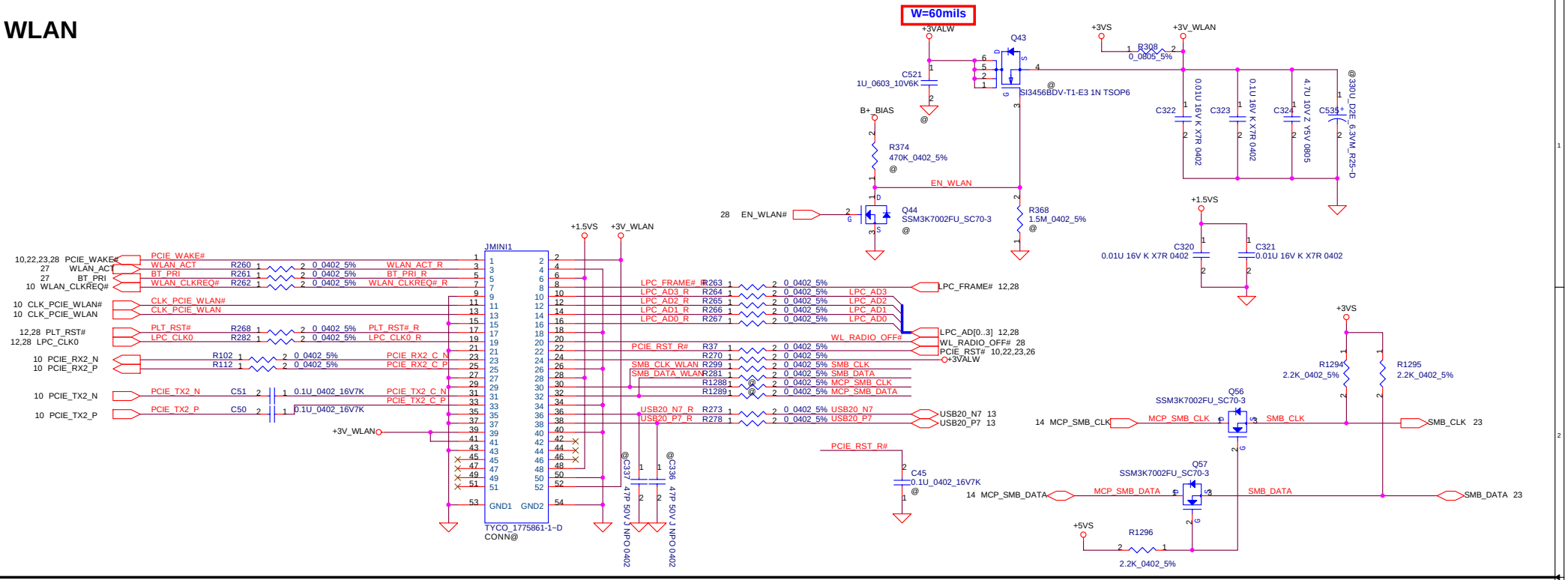

WWAN

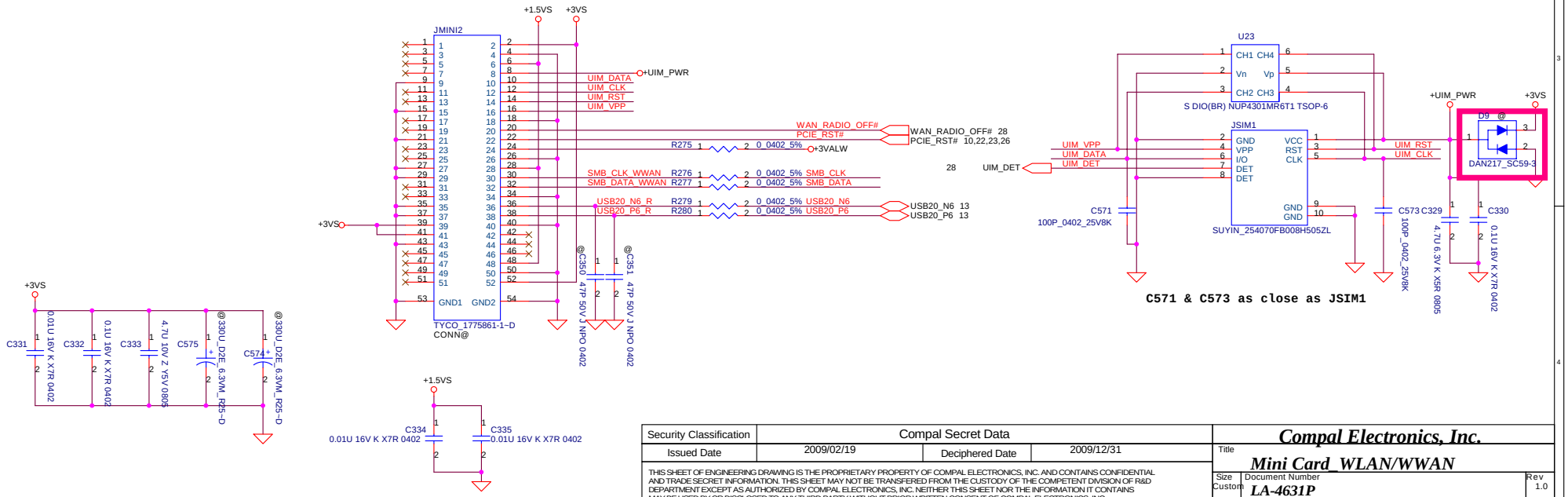

Security Classification	Compal Secret Data		
Issued Date	2009/02/19	Deciphered Date	2009/12/31

THIS SHEET OF ENGINEERING DRAWING IS THE PROPRIETARY PROPERTY OF COMPAL ELECTRONICS, INC. AND CONTAINS CONFIDENTIAL AND TRADE SECRET INFORMATION. THIS SHEET MAY NOT BE TRANSFERED FROM THE CUSTODY OF THE COMPETENT DIVISION OF R&D DEPARTMENT EXCEPT AS AUTHORIZED BY COMPAL ELECTRONICS, INC. NEITHER THIS SHEET NOR THE INFORMATION IT CONTAINS MAY BE USED BY OR DISCLOSED TO ANY THIRD PARTY WITHOUT PRIOR WRITTEN CONSENT OF COMPAL ELECTRONICS, INC.

Compal Electronics, Inc.

Title: **Mini Card_WLAN/WWAN**

Size: Custom | Document Number: **LA-4631P** | Rev: 1.0

Date: Tuesday, February 24, 2009 | Sheet 24 of 42

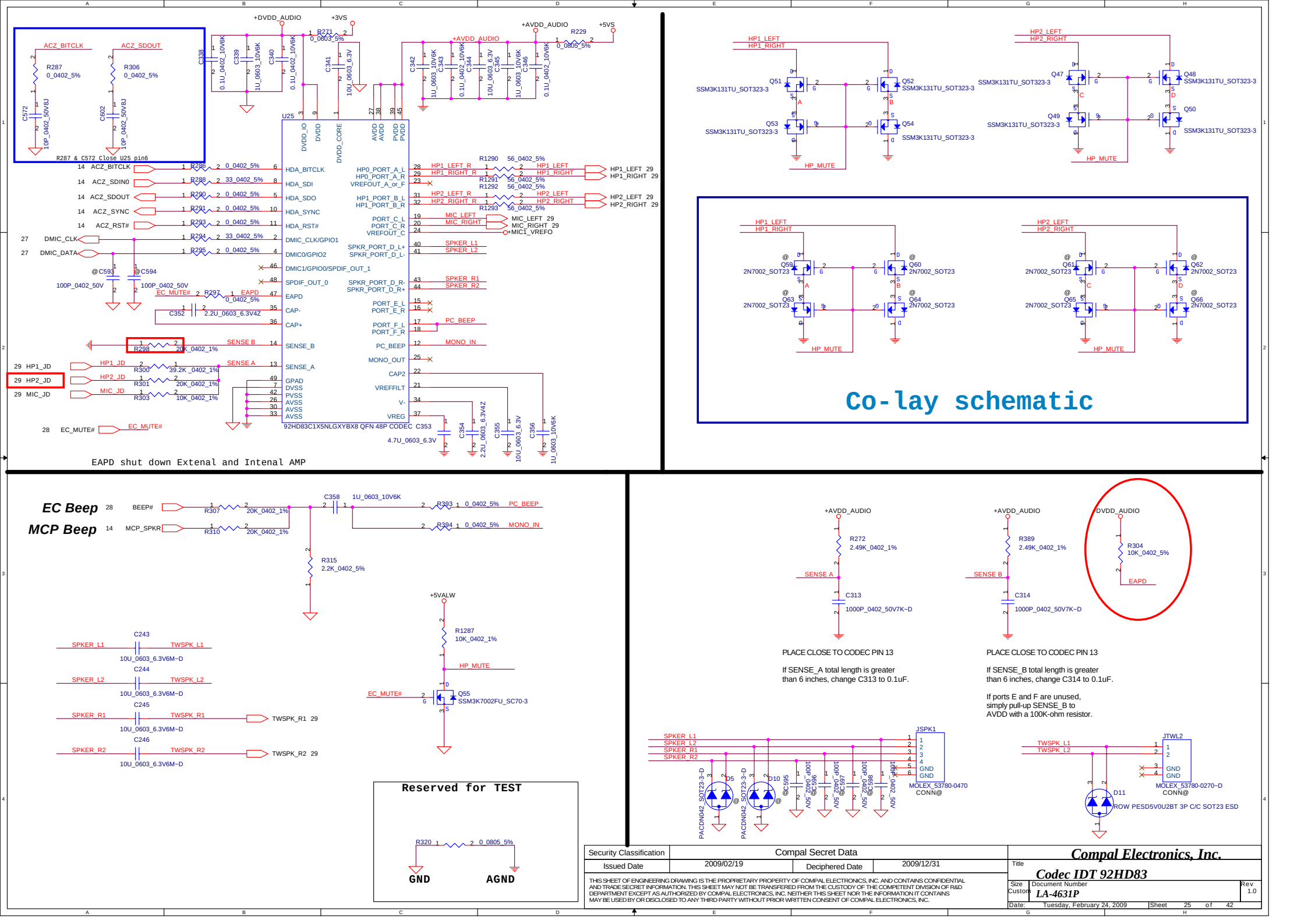

Security Classification	Compal Secret Data		
Issued Date	2009/02/19	Deciphered Date	2009/12/31

THIS SHEET OF ENGINEERING DRAWING IS THE PROPRIETARY PROPERTY OF COMPAL ELECTRONICS, INC. AND CONTAINS CONFIDENTIAL AND TRADE SECRET INFORMATION. THIS SHEET MAY NOT BE TRANSFERED FROM THE CUSTODY OF THE COMPETENT DIVISION OF R&D DEPARTMENT EXCEPT AS AUTHORIZED BY COMPAL ELECTRONICS, INC. NEITHER THIS SHEET NOR THE INFORMATION IT CONTAINS MAY BE USED BY OR DISCLOSED TO ANY THIRD PARTY WITHOUT PRIOR WRITTEN CONSENT OF COMPAL ELECTRONICS, INC.

Compal Electronics, Inc.

Title: Codec IDT 92HD83

Size: Custom | Document Number: LA-4631P | Rev: 1.0

Date: Tuesday, February 24, 2009 | Sheet 25 of 42

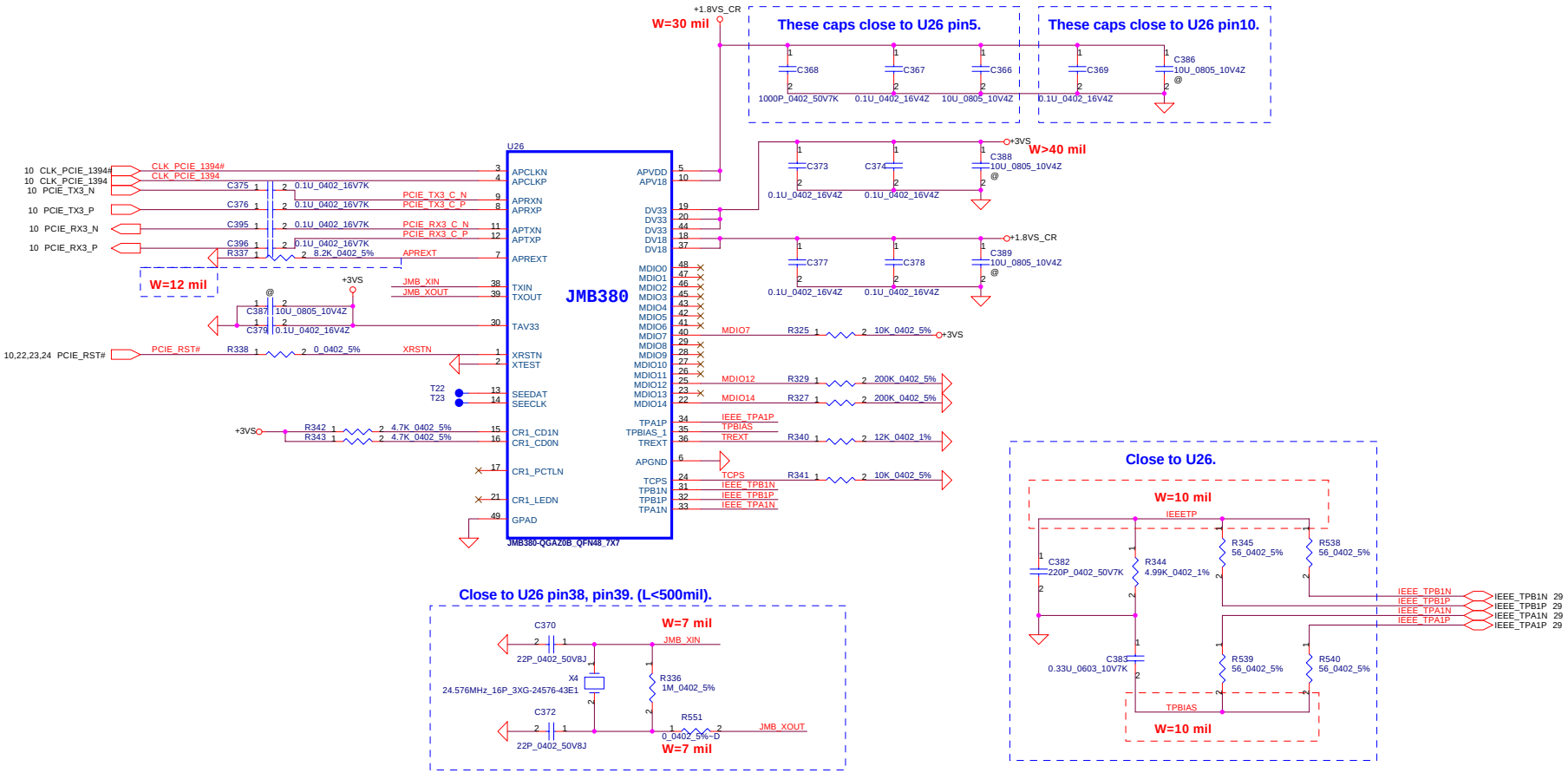

Security Classification	Compal Secret Data		
Issued Date	2009/02/19	Deciphered Date	2009/12/31

THIS SHEET OF ENGINEERING DRAWING IS THE PROPRIETARY PROPERTY OF COMPAL ELECTRONICS, INC. AND CONTAINS CONFIDENTIAL AND TRADE SECRET INFORMATION. THIS SHEET MAY NOT BE TRANSFERED FROM THE CUSTODY OF THE COMPETENT DIVISION OF R&D DEPARTMENT EXCEPT AS AUTHORIZED BY COMPAL ELECTRONICS, INC. NEITHER THIS SHEET NOR THE INFORMATION IT CONTAINS MAY BE USED BY OR DISCLOSED TO ANY THIRD PARTY WITHOUT PRIOR WRITTEN CONSENT OF COMPAL ELECTRONICS, INC.

Compal Electronics, Inc.

Title: **IEEE1394_JMB380**

Size: Custom | Document Number: **LA-4631P** | Rev: 1.0

Date: Tuesday, February 24, 2009 | Sheet 26 of 42

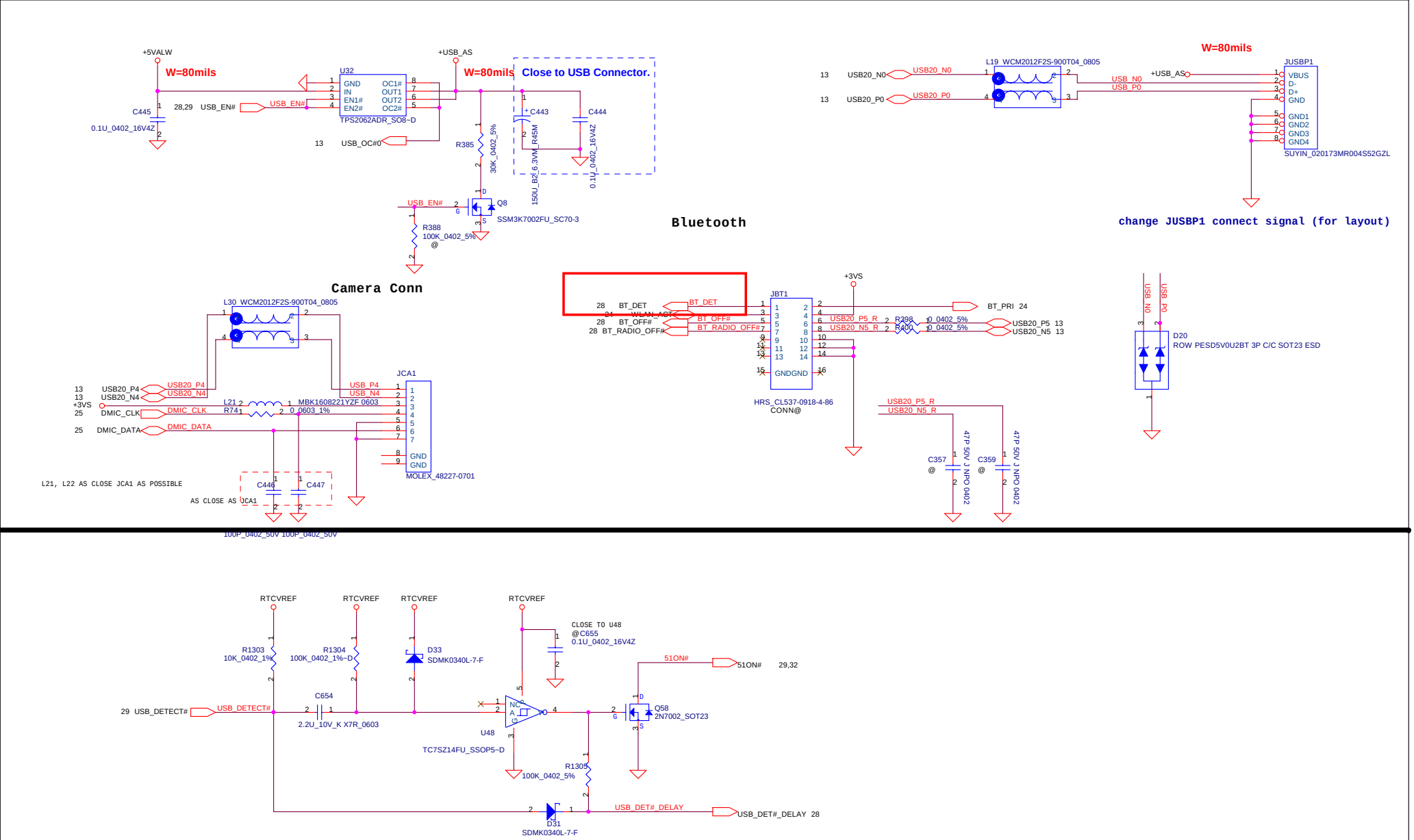

Security Classification	Compal Secret Data		
Issued Date	2009/02/19	Deciphered Date	2009/12/31

THIS SHEET OF ENGINEERING DRAWING IS THE PROPRIETARY PROPERTY OF COMPAL ELECTRONICS, INC. AND CONTAINS CONFIDENTIAL AND TRADE SECRET INFORMATION. THIS SHEET MAY NOT BE TRANSFERRED FROM THE CUSTODY OF THE COMPETENT DIVISION OF R&D DEPARTMENT EXCEPT AS AUTHORIZED BY COMPAL ELECTRONICS, INC. NEITHER THIS SHEET NOR THE INFORMATION IT CONTAINS MAY BE USED BY OR DISCLOSED TO ANY THIRD PARTY WITHOUT PRIOR WRITTEN CONSENT OF COMPAL ELECTRONICS, INC.

Compal Electronics, Inc.

Title: **USB/BlueTooth/FP/Felcia**

Size: Custom | Document Number: LA-4631P | Rev: 1.0

Date: Tuesday, February 24, 2009 | Sheet 27 of 42

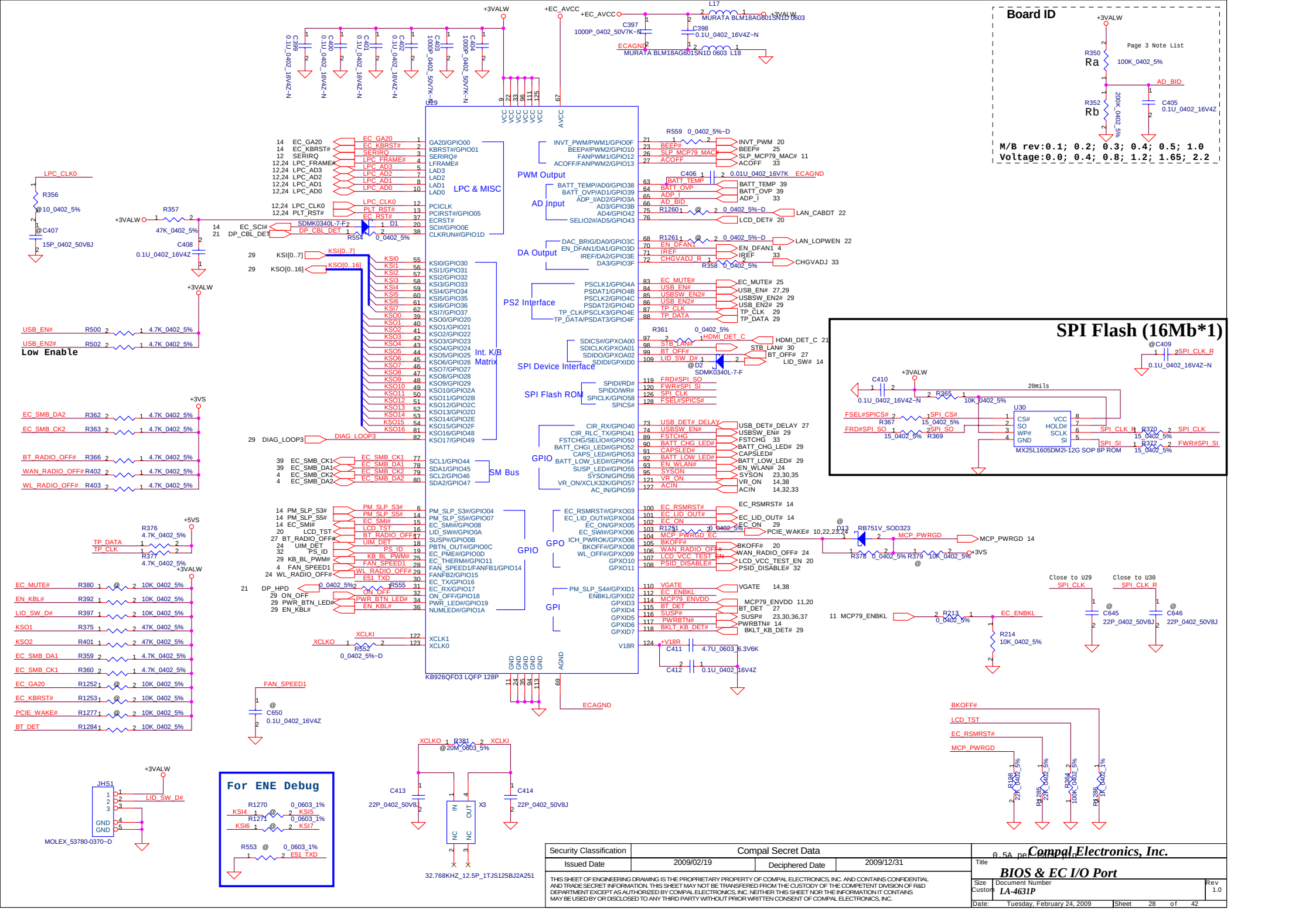
Board ID
Page 3 Note List
M/B rev:0.1; 0.2; 0.3; 0.4; 0.5; 1.0
Voltage:0.0; 0.4; 0.8; 1.2; 1.65; 2.2
SPI Flash (16Mb*1)
MX25L1605DM2I-12G SOP 8P ROM
U29
KB926QFD3 LQFP 128P
LPC & MISC
PWM Output
AD Input
DA Output
PS2 Interface
Int. K/B Matrix
SPI Device Interface
SPI Flash ROM
GPIO
SM Bus
GPO
GPI
Low Enable
For ENE Debug
32.768KHZ_12.5P_1TJS125BJ2A251
MOLEX_53780-0370-D
Compal Electronics, Inc.
BIOS & EC I/O Port
LA-4631P
Security Classification
Compal Secret Data
Issued Date
2009/02/19
Deciphered Date
2009/12/31
Tuesday, February 24, 2009
Sheet 28 of 42

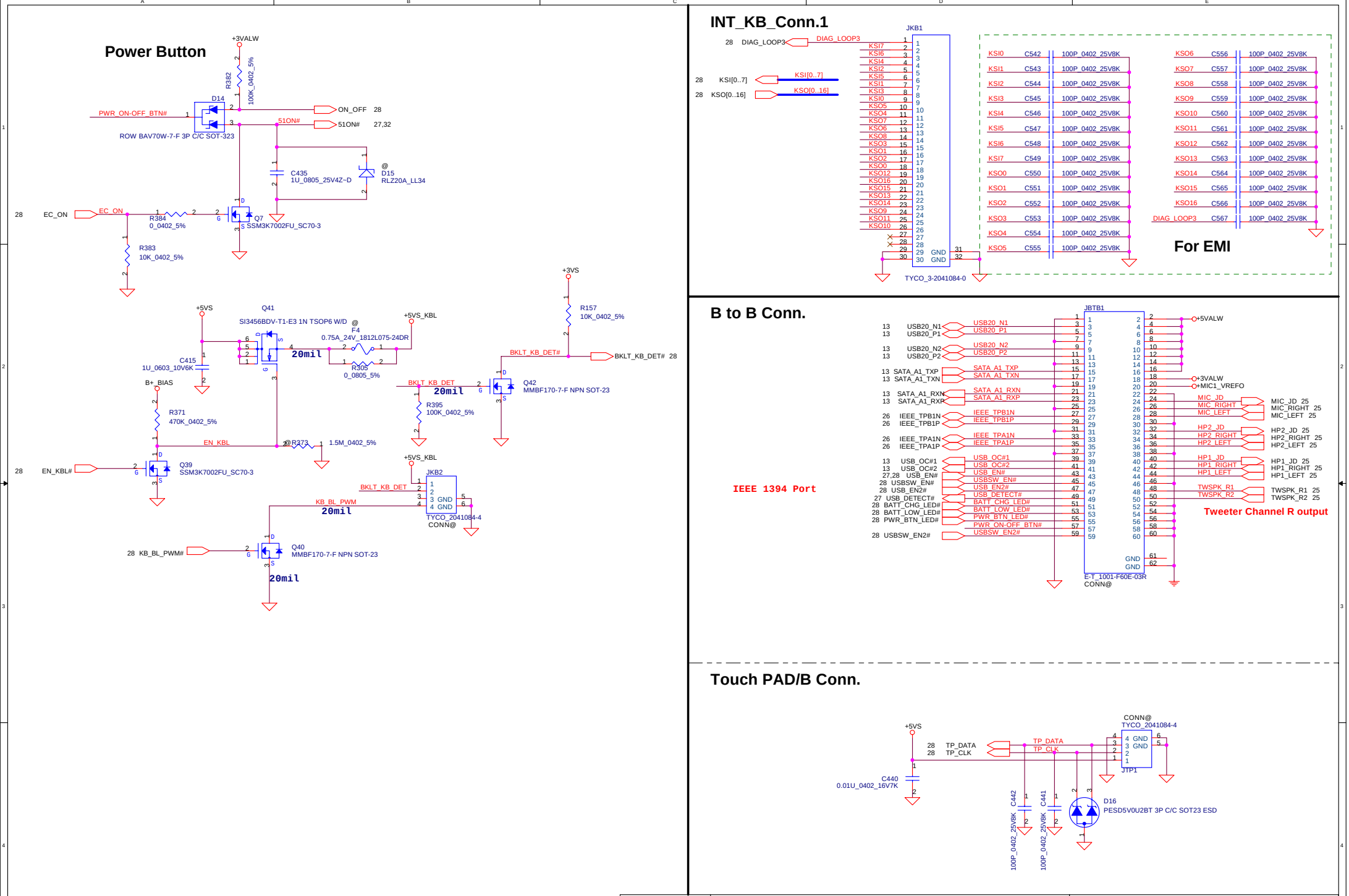

Security Classification	Compal Secret Data			Compal Electronics, Inc.
Issued Date	2009/02/19	Deciphered Date	2009/12/31	Title: PWR_OK/BTN/TP
				Size: Custom; Document Number: LA-4631P; Rev: 1.0
				Date: Tuesday, February 24, 2009; Sheet 29 of 42

THIS SHEET OF ENGINEERING DRAWING IS THE PROPRIETARY PROPERTY OF COMPAL ELECTRONICS, INC. AND CONTAINS CONFIDENTIAL AND TRADE SECRET INFORMATION. THIS SHEET MAY NOT BE TRANSFERED FROM THE CUSTODY OF THE COMPETENT DIVISION OF R&D DEPARTMENT EXCEPT AS AUTHORIZED BY COMPAL ELECTRONICS, INC. NEITHER THIS SHEET NOR THE INFORMATION IT CONTAINS MAY BE USED BY OR DISCLOSED TO ANY THIRD PARTY WITHOUT PRIOR WRITTEN CONSENT OF COMPAL ELECTRONICS, INC.

+3VALW to +3VS Transfer

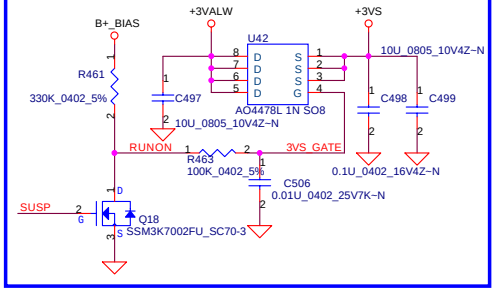

+5VALW to +5VS Transfer

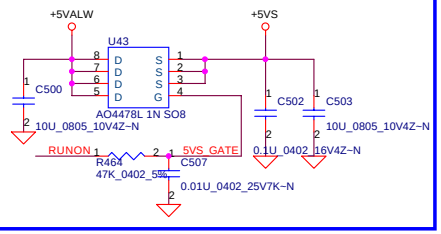

+1.05VALW to +VCCP Transfer

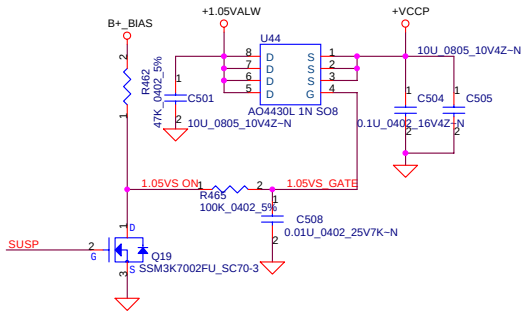

+3VALW TO +3V_LAN

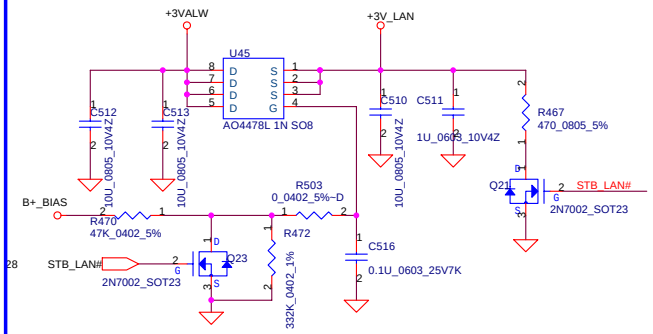

+1.5V to +1.5VS Transfer

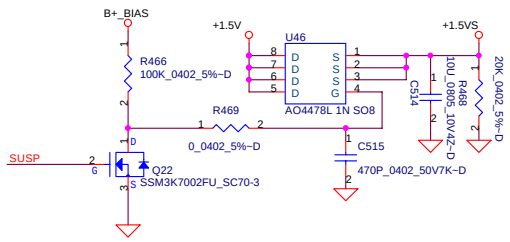

+3VALW to +3V_DP Transfer

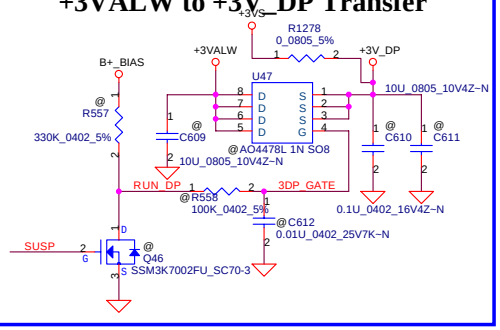

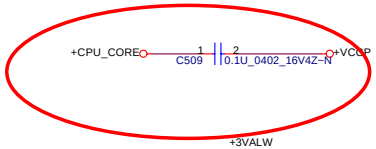

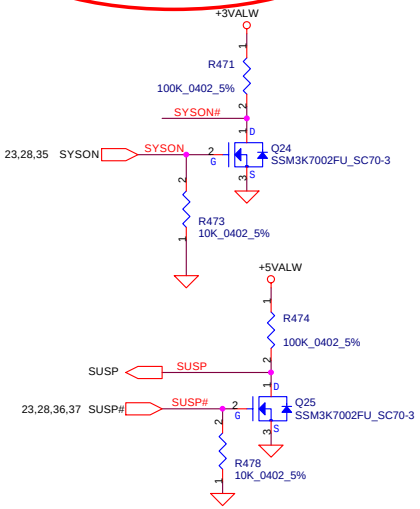

Discharge Circuit

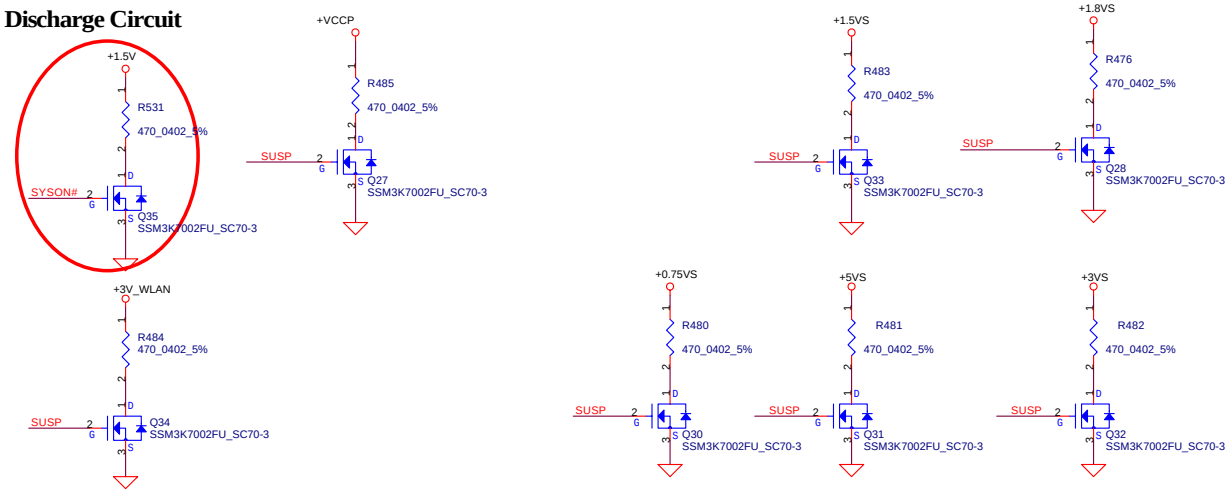

Security Classification	Compal Secret Data		
Issued Date	2009/02/19	Deciphered Date	2009/12/31

THIS SHEET OF ENGINEERING DRAWING IS THE PROPRIETARY PROPERTY OF COMPAL ELECTRONICS, INC. AND CONTAINS CONFIDENTIAL AND TRADE SECRET INFORMATION. THIS SHEET MAY NOT BE TRANSFERED FROM THE CUSTODY OF THE COMPETENT DIVISION OF R&D DEPARTMENT EXCEPT AS AUTHORIZED BY COMPAL ELECTRONICS, INC. NEITHER THIS SHEET NOR THE INFORMATION IT CONTAINS MAY BE USED BY OR DISCLOSED TO ANY THIRD PARTY WITHOUT PRIOR WRITTEN CONSENT OF COMPAL ELECTRONICS, INC.

Compal Electronics, Inc.

Title: **DC/DC Circuits**

Size: Custom | Document Number: LA-4631P | Rev: 1.0

Date: Tuesday, February 24, 2009 | Sheet 30 of 42

Security Classification	Compal Secret Data			Compal Electronics, Inc.
Issued Date	2009/02/19	Deciphered Date	2009/12/31	Title: Screws
				Size: Custom; Document Number: LA-4631P; Rev: 1.0
				Date: Thursday, February 19, 2009; Sheet 31 of 42

THIS SHEET OF ENGINEERING DRAWING IS THE PROPRIETARY PROPERTY OF COMPAL ELECTRONICS, INC. AND CONTAINS CONFIDENTIAL AND TRADE SECRET INFORMATION. THIS SHEET MAY NOT BE TRANSFERED FROM THE CUSTODY OF THE COMPETENT DIVISION OF R&D DEPARTMENT EXCEPT AS AUTHORIZED BY COMPAL ELECTRONICS, INC. NEITHER THIS SHEET NOR THE INFORMATION IT CONTAINS MAY BE USED BY OR DISCLOSED TO ANY THIRD PARTY WITHOUT PRIOR WRITTEN CONSENT OF COMPAL ELECTRONICS, INC.

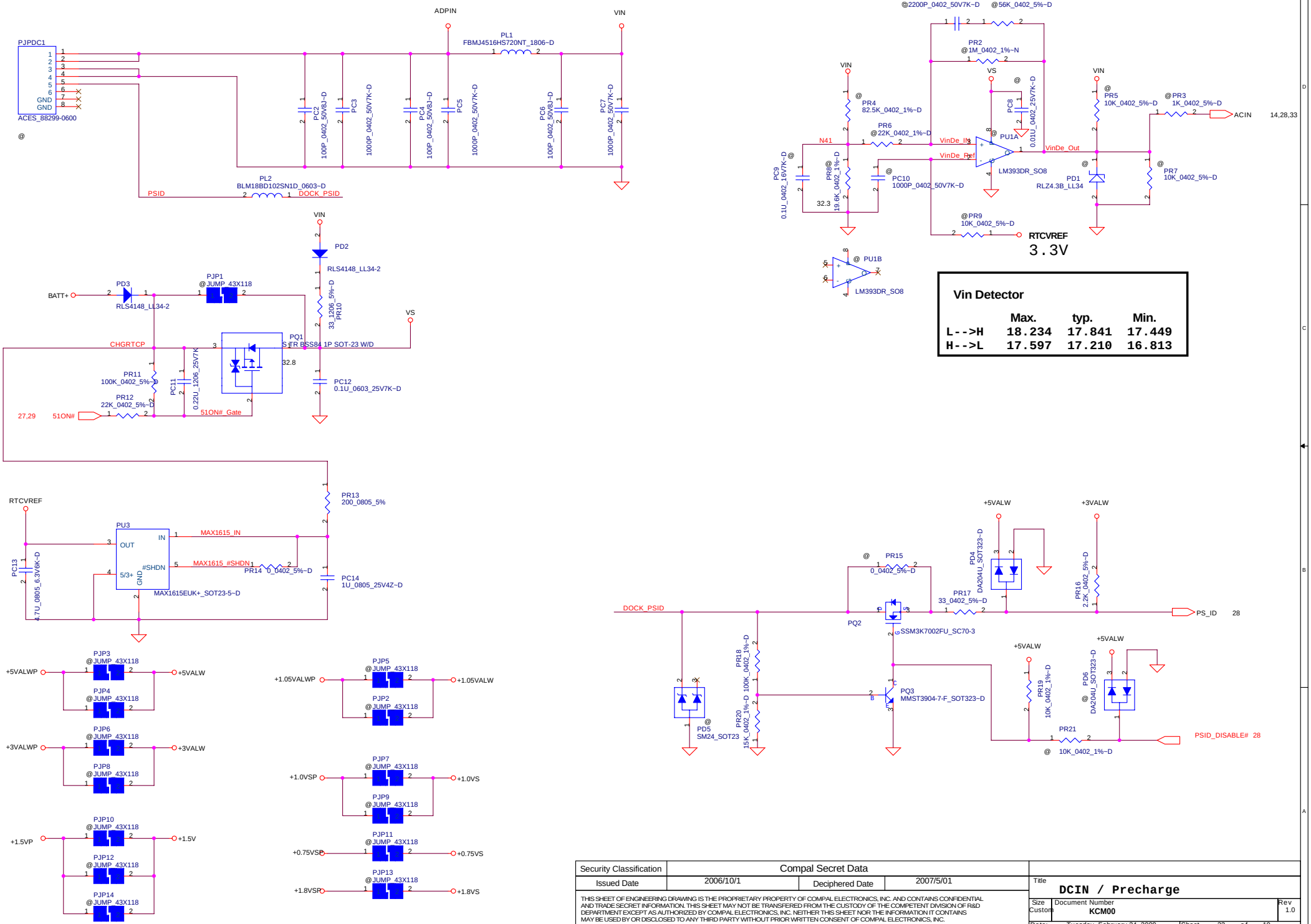

Vin Detector

	Max.	typ.	Min.
L-->H	18.234	17.841	17.449
H-->L	17.597	17.210	16.813

Security Classification	Compal Secret Data		
Issued Date	2006/10/1	Deciphered Date	2007/5/01

THIS SHEET OF ENGINEERING DRAWING IS THE PROPRIETARY PROPERTY OF COMPAL ELECTRONICS, INC. AND CONTAINS CONFIDENTIAL AND TRADE SECRET INFORMATION. THIS SHEET MAY NOT BE TRANSFERED FROM THE CUSTODY OF THE COMPETENT DIVISION OF R&D DEPARTMENT EXCEPT AS AUTHORIZED BY COMPAL ELECTRONICS, INC. NEITHER THIS SHEET NOR THE INFORMATION IT CONTAINS MAY BE USED BY OR DISCLOSED TO ANY THIRD PARTY WITHOUT PRIOR WRITTEN CONSENT OF COMPAL ELECTRONICS, INC.

Title: **DCIN / Precharge**

Size: Custom | Document Number: KCM00 | Rev: 1.0

Date: Tuesday, February 24, 2009 | Sheet 32 of 10

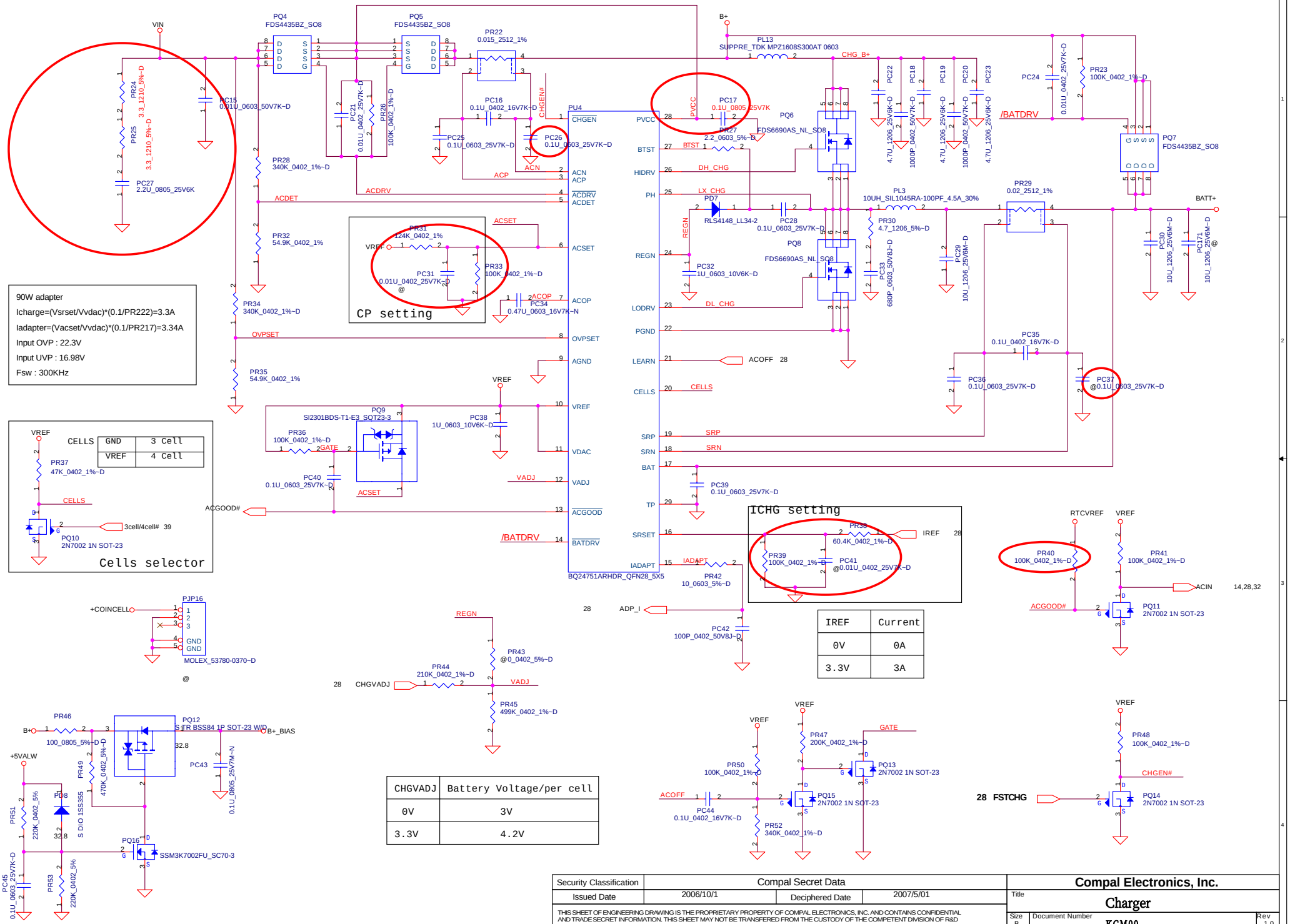

CELLS	
GND	3 Cell
VREF	4 Cell

IREF	Current
0V	0A
3.3V	3A

CHGVADJ	Battery Voltage/per cell
0V	3V
3.3V	4.2V

Security Classification	Compal Secret Data		
Issued Date	2006/10/1	Deciphered Date	2007/5/01

THIS SHEET OF ENGINEERING DRAWING IS THE PROPRIETARY PROPERTY OF COMPAL ELECTRONICS, INC. AND CONTAINS CONFIDENTIAL AND TRADE SECRET INFORMATION. THIS SHEET MAY NOT BE TRANSFERED FROM THE CUSTODY OF THE COMPETENT DIVISION OF R&D DEPARTMENT EXCEPT AS AUTHORIZED BY COMPAL ELECTRONICS, INC. NEITHER THIS SHEET NOR THE INFORMATION IT CONTAINS MAY BE USED BY OR DISCLOSED TO ANY THIRD PARTY WITHOUT PRIOR WRITTEN CONSENT OF COMPAL ELECTRONICS, INC.

Compal Electronics, Inc.

Title: Charger

Size: B | Document Number: KCM00 | Rev: 1.0

Date: Tuesday, February 24, 2009 | Sheet 33 of 10

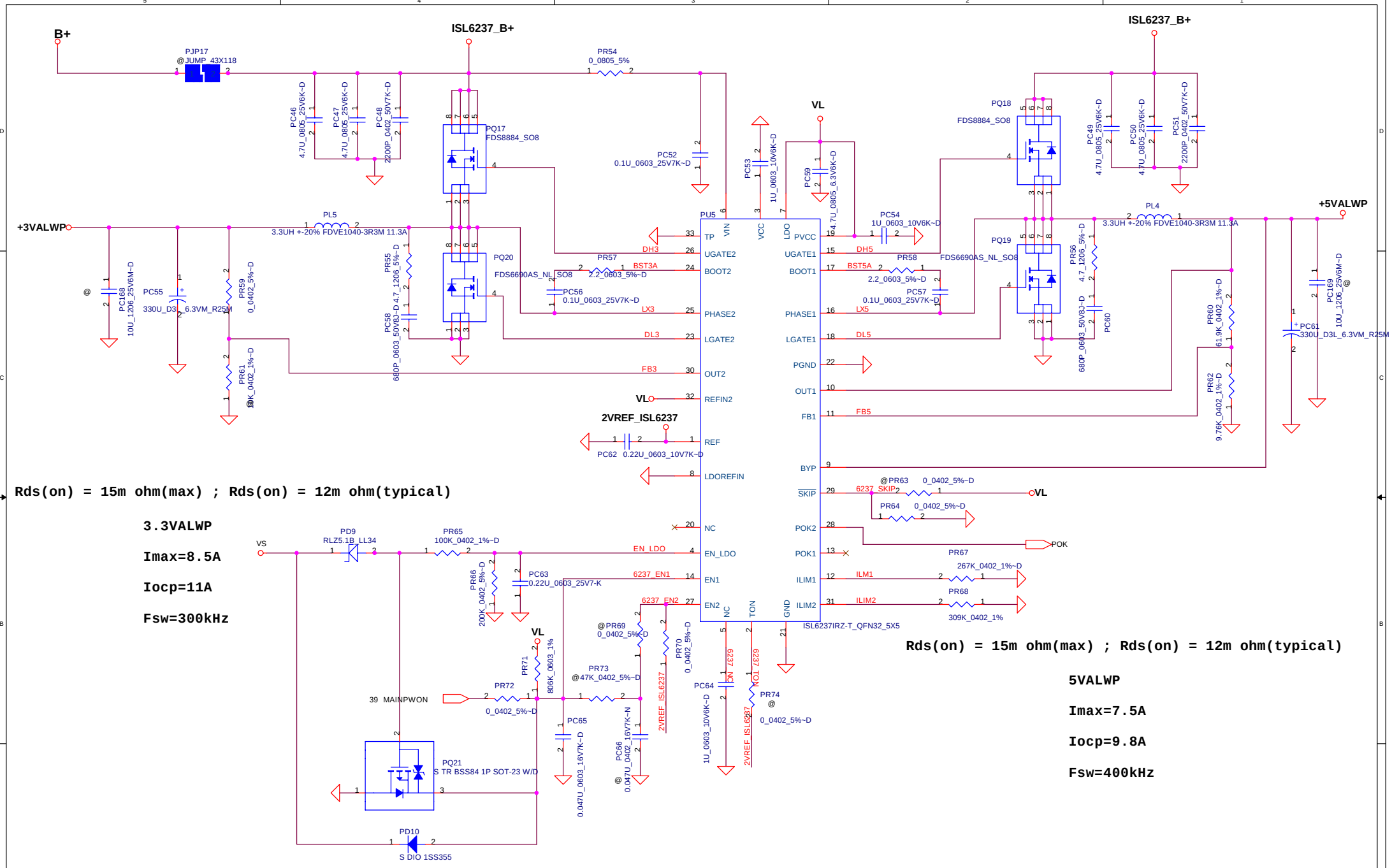

Security Classification	Compal Secret Data			Compal Electronics, Inc.
Issued Date	2006/10/1	Deciphered Date	2007/05/30	Title: +3VALWP, +5VALWP
				Size: Custom; Document Number: KCM00; Rev: 1.0
				Date: Tuesday, February 24, 2009; Sheet 34 of 10

THIS SHEET OF ENGINEERING DRAWING IS THE PROPRIETARY PROPERTY OF COMPAL ELECTRONICS, INC. AND CONTAINS CONFIDENTIAL AND TRADE SECRET INFORMATION. THIS SHEET MAY NOT BE TRANSFERED FROM THE CUSTODY OF THE COMPETENT DIVISION OF R&D DEPARTMENT EXCEPT AS AUTHORIZED BY COMPAL ELECTRONICS, INC. NEITHER THIS SHEET NOR THE INFORMATION IT CONTAINS MAY BE USED BY OR DISCLOSED TO ANY THIRD PARTY WITHOUT PRIOR WRITTEN CONSENT OF COMPAL ELECTRONICS, INC.

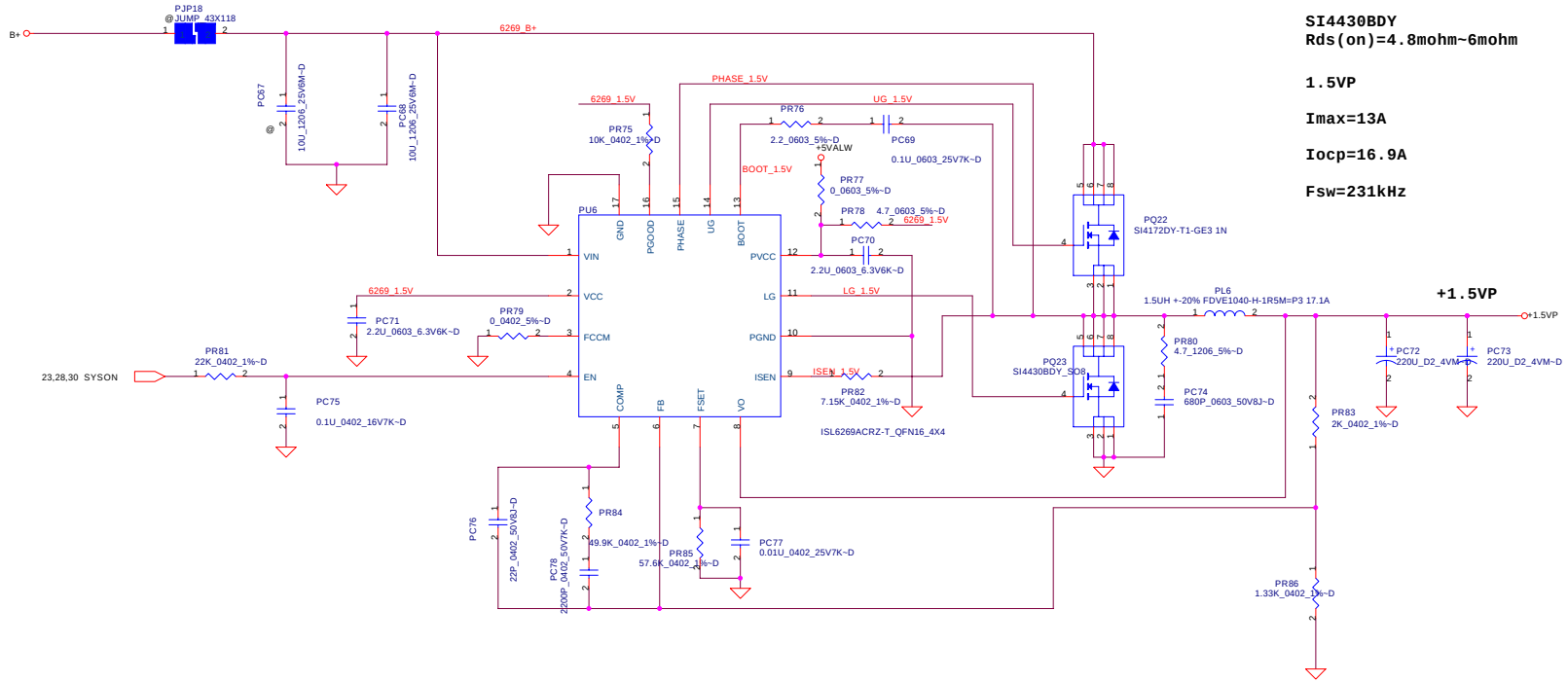

SI4430BDY
Rds(on)=4.8mohm~6mohm

1.5VP

Imax=13A

Iocp=16.9A

Fsw=231kHz

+1.5VP

Security Classification	Compal Secret Data		
Issued Date	2006/10/1	Deciphered Date	2007/05/30

THIS SHEET OF ENGINEERING DRAWING IS THE PROPRIETARY PROPERTY OF COMPAL ELECTRONICS, INC. AND CONTAINS CONFIDENTIAL AND TRADE SECRET INFORMATION. THIS SHEET MAY NOT BE TRANSFERED FROM THE CUSTODY OF THE COMPETENT DIVISION OF R&D DEPARTMENT EXCEPT AS AUTHORIZED BY COMPAL ELECTRONICS, INC. NEITHER THIS SHEET NOR THE INFORMATION IT CONTAINS MAY BE USED BY OR DISCLOSED TO ANY THIRD PARTY WITHOUT PRIOR WRITTEN CONSENT OF COMPAL ELECTRONICS, INC.

Compal Electronics, Inc.

Title: **1.5VP**

Size | Document Number: **KCM00** | Rev: 1.0

Date: Tuesday, February 24, 2009 | Sheet 35 of 10

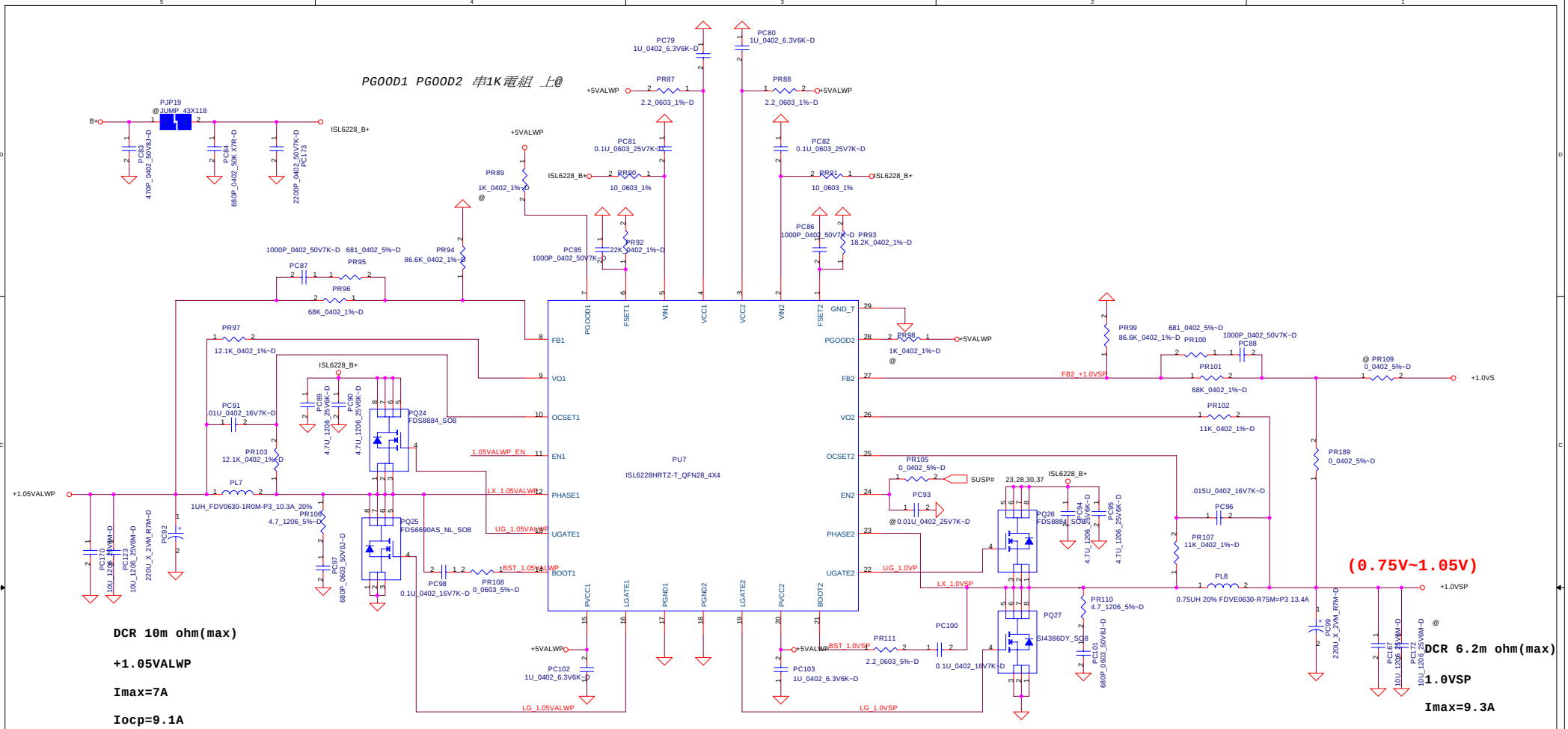

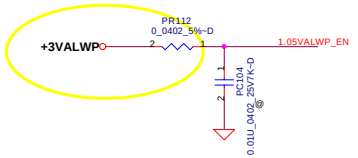

VID2	VID1	VID0	voltage
L	L	L	1.05
L	L	H	0.98
L	H	L	0.90
L	H	H	0.87
H	L	L	0.80
H	L	H	0.79
H	H	L	0.77
H	H	H	0.75

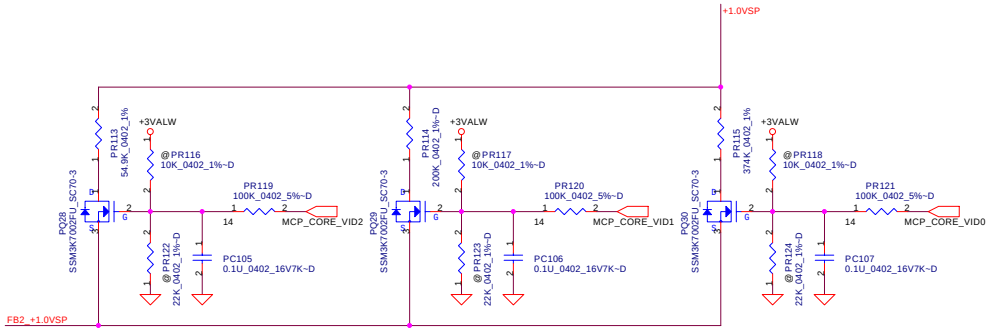

Security Classification	Compal Secret Data		
Issued Date	2006/10/1	Deciphered Date	2007/5/01

THIS SHEET OF ENGINEERING DRAWING IS THE PROPRIETARY PROPERTY OF COMPAL ELECTRONICS, INC. AND CONTAINS CONFIDENTIAL AND TRADE SECRET INFORMATION. THIS SHEET MAY NOT BE TRANSFERED FROM THE CUSTODY OF THE COMPETENT DIVISION OF R&D DEPARTMENT EXCEPT AS AUTHORIZED BY COMPAL ELECTRONICS, INC. NEITHER THIS SHEET NOR THE INFORMATION IT CONTAINS MAY BE USED BY OR DISCLOSED TO ANY THIRD PARTY WITHOUT PRIOR WRITTEN CONSENT OF COMPAL ELECTRONICS, INC.

Title: 1.05VALWP/+1.0VSP

Size | Document Number: KCM00 | Rev 1.0

Date: Tuesday, February 24, 2009 | Sheet 36 of 10

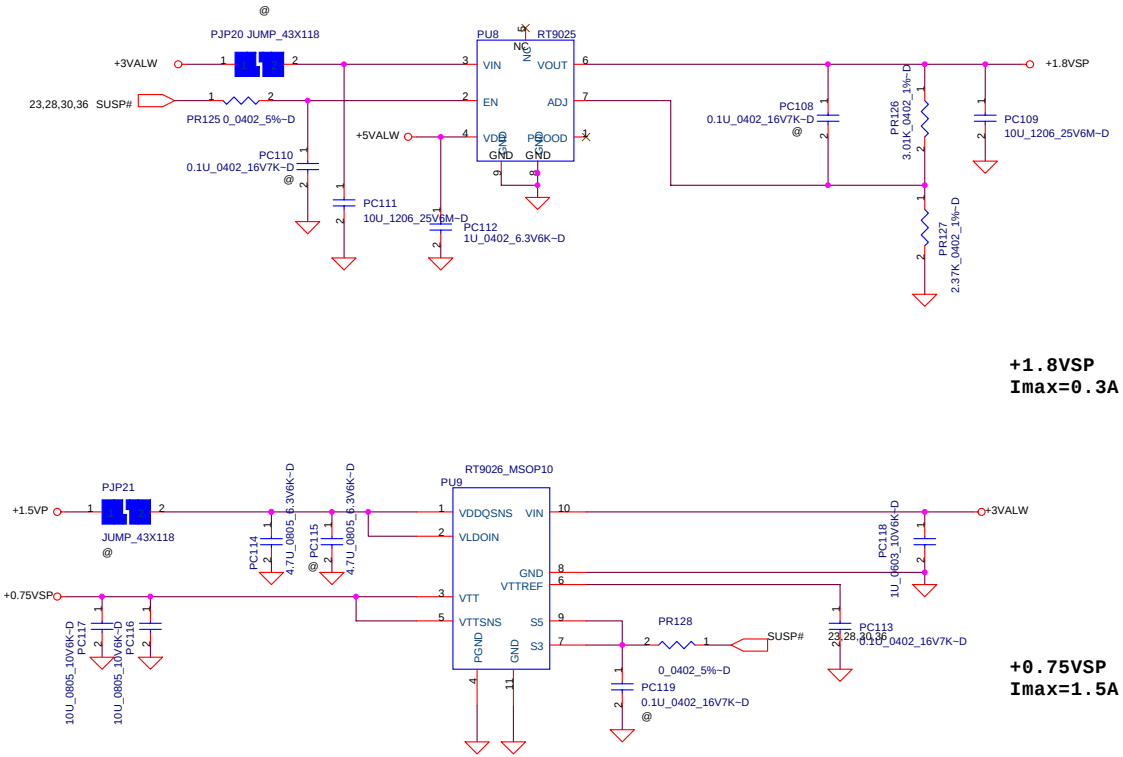

Security Classification	Compal Secret Data			Compal Electronics, Inc.
Issued Date	2005/10/1	Deciphered Date	2007/05/30	Title: +0.75VSP/ 1.8VSP
				Size: Custom; Document Number: KCM00; Rev: 1.0
				Date: Tuesday, February 24, 2009; Sheet 37 of 10

THIS SHEET OF ENGINEERING DRAWING IS THE PROPRIETARY PROPERTY OF COMPAL ELECTRONICS, INC. AND CONTAINS CONFIDENTIAL AND TRADE SECRET INFORMATION. THIS SHEET MAY NOT BE TRANSFERED FROM THE CUSTODY OF THE COMPETENT DIVISION OF R&D DEPARTMENT EXCEPT AS AUTHORIZED BY COMPAL ELECTRONICS, INC. NEITHER THIS SHEET NOR THE INFORMATION IT CONTAINS MAY BE USED BY OR DISCLOSED TO ANY THIRD PARTY WITHOUT PRIOR WRITTEN CONSENT OF COMPAL ELECTRONICS, INC.

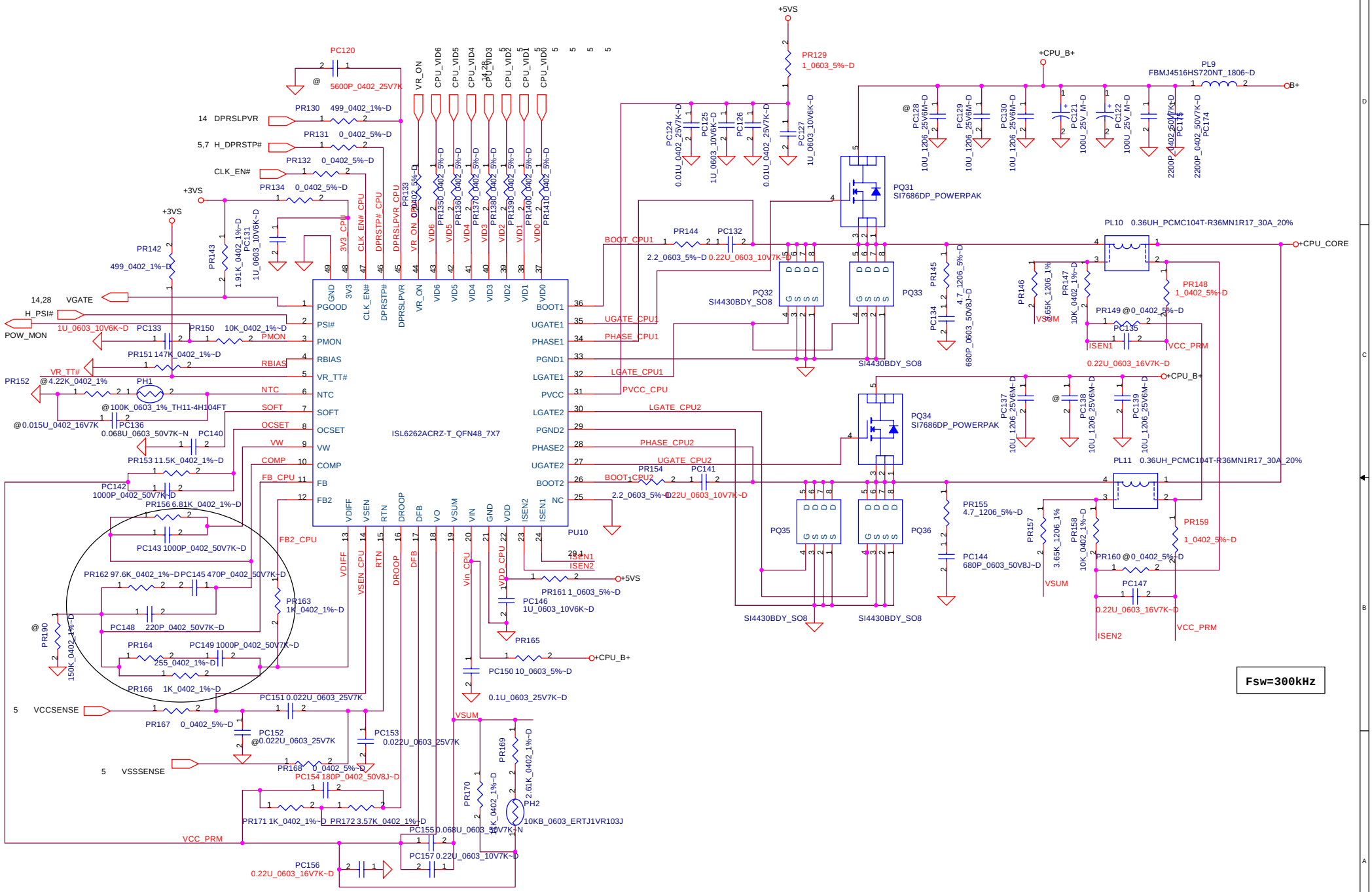

Security Classification	Compal Secret Data		
Issued Date	2007/1/15	Deciphered Date	2008/1/15

THIS SHEET OF ENGINEERING DRAWING IS THE PROPRIETARY PROPERTY OF COMPAL ELECTRONICS, INC. AND CONTAINS CONFIDENTIAL AND TRADE SECRET INFORMATION. THIS SHEET MAY NOT BE TRANSFERED FROM THE CUSTODY OF THE COMPETENT DIVISION OF R&D DEPARTMENT EXCEPT AS AUTHORIZED BY COMPAL ELECTRONICS, INC. NEITHER THIS SHEET NOR THE INFORMATION IT CONTAINS MAY BE USED BY OR DISCLOSED TO ANY THIRD PARTY WITHOUT PRIOR WRITTEN CONSENT OF COMPAL ELECTRONICS, INC.

Compal Electronics, Inc.

Title: **+CPU_CORE**

Size: Custom | Document Number: **KCM00** | Rev: 1.0

Date: Tuesday, February 24, 2009 | Sheet 38 of 10

Battery Connect/OTP

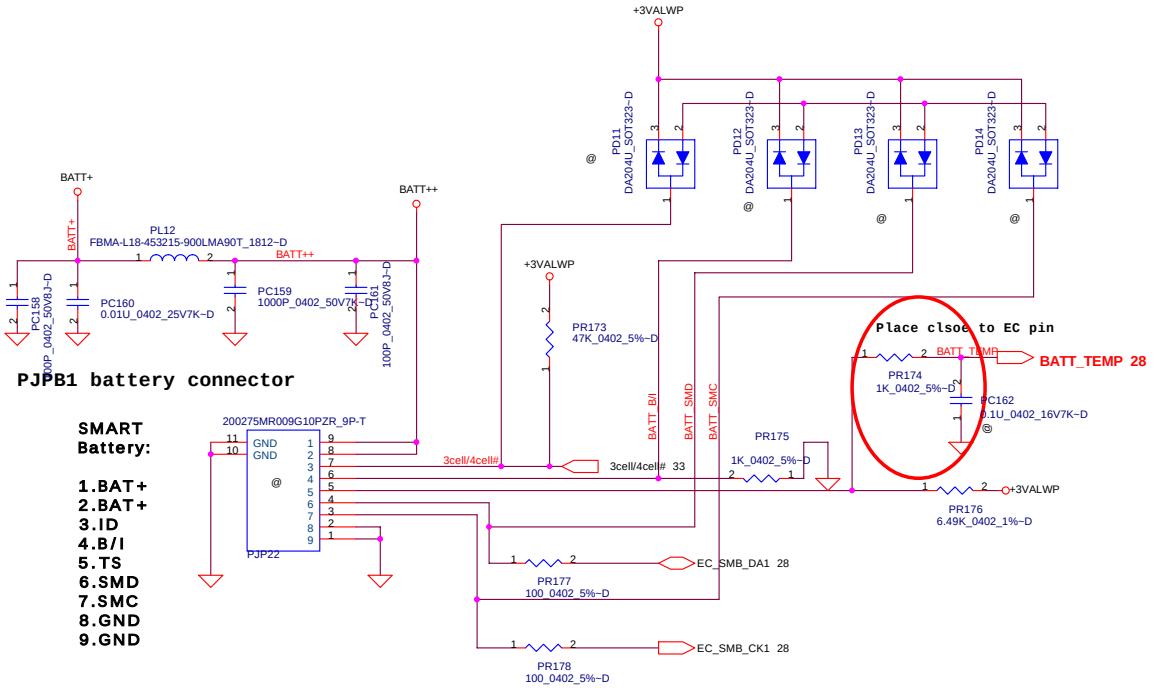

CPU

PH1 under CPU botten side :
CPU thermal protection at 90 +-3 degree C
Recovery at 50 +-3 degree C

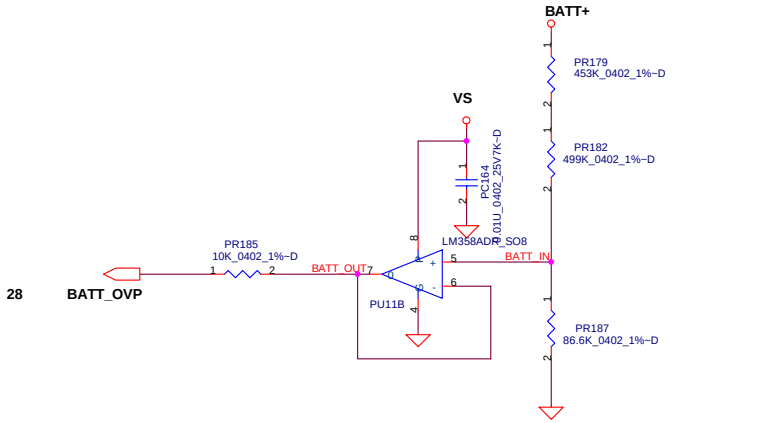

LI-3S :12.6V----BATT-OVP=1.1V
LI-4S :16.8V----BATT-OVP=1.5V
BATT-OVP=0.111*BATT+

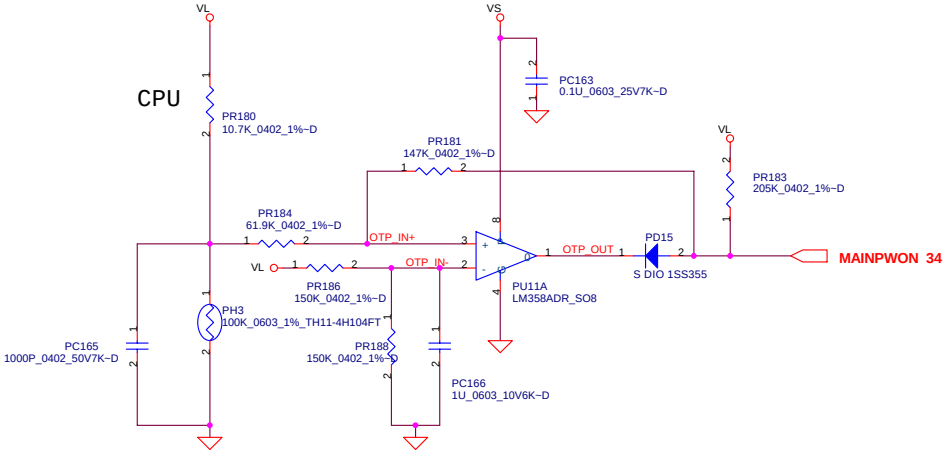

Security Classification	Compal Secret Data		
Issued Date	2005/10/1	Deciphered Date	2007/05/30

THIS SHEET OF ENGINEERING DRAWING IS THE PROPRIETARY PROPERTY OF COMPAL ELECTRONICS, INC. AND CONTAINS CONFIDENTIAL AND TRADE SECRET INFORMATION. THIS SHEET MAY NOT BE TRANSFERED FROM THE CUSTODY OF THE COMPETENT DIVISION OF R&D DEPARTMENT EXCEPT AS AUTHORIZED BY COMPAL ELECTRONICS, INC. NEITHER THIS SHEET NOR THE INFORMATION IT CONTAINS MAY BE USED BY OR DISCLOSED TO ANY THIRD PARTY WITHOUT PRIOR WRITTEN CONSENT OF COMPAL ELECTRONICS, INC.

Compal Electronics, Inc.

Title: BATTERY CONN

Size: Custom | Document Number: KCM00 | Rev: 1.0

Date: Tuesday, February 24, 2009 | Sheet 39 of 10

Version Change List (P. I. R. List) Page 1/1

Item	Page#	Title	Date	Request Owner	Issue Description	Solution Description	Rev.
1	p37	+0.75VSP/1.8VSP	08/10/15	compal	source shortage	pu9	
2	p33	charger	08/10/15	compal	design change	PQ6 PQ8	
3	p32	DCIN / Precharge	08/10/15	compal	meet PSL	PQ2	
4	p33	charger	08/10/15	compal	meet PSL	PQ16	
5	p32	DCIN / Precharge	08/10/15	compal	meet PSL	PQ1	
6	p33	charger	08/10/15	compal	meet PSL	PQ12	
7	p34	+3VALWP/+5VALWP	08/10/15	compal	meet PSL	PQ21	
8	p33	charger	08/10/15	compal	meet PSL	PR22 PR29	
9	p37	+0.75VSP/1.8VSP	08/10/15	compal	adjust 1.8V output voltage	PR127 PR124	
10	p33	charger	08/10/15	compal	adjust charge current to 3.1A	PR38	
11	p33	charger	08/10/15	compal	adjust CP set for ICPP function	PR38	
12	p34	+3VALWP/+5VALWP	08/10/15	compal	meet choke component current limit	PL4 PL5	
13	p32	DCIN / Precharge	08/10/15	compal	meet PSL	PL1	
14	p38	CPU_CORE	08/10/15	compal	meet PSL	PL9	
15	p39	BATTERY CONN	08/10/15	compal	meet PSL	PL12	
16	p33	charger	08/10/22	compal	design change	PQ6 PQ8	
17	p35	+1.5VSP	08/10/22	compal	reduce L/S MOS Vds	PQ22	
18	p36	+1.05VALWP/1.0VP	08/10/22	compal	Add remote sense function	PR189	
19	p36	+1.05VALWP/1.0VP	08/10/22	compal	adjust output voltage	pr94	
20	p36	+1.05VALWP/1.0VP	08/10/22	compal	design change	PL8	
21	p35	+1.5VSP	08/10/22	compal	design change	PL6	
22	p33	charger	08/10/22	compal	EMI request	PL13	
23	ALL	every power	08/10/22	compal	reduce output ripple	PC123 PC167 PC168 PC169 PC170	
24	ALL	every power	08/10/22	compal	sunbber for EMI request	PR30 PR106 PR55 PR56 PR80 PR110 PR105 PR155	
25	ALL	every power	08/10/22	compal	sunbber for EMI request	PC33 PC58 PC60 PC74 PC97 PC101 PC134 PC144	
26	P34 P35	every power	08/10/22	compal	increase boost resistor value form 0 ohm to 2.2 ohm for EMI request	PR57 PR58 Pr76	
27	p39	BATTERY CONN	08/12/03	compal	adjust OTP set	PR183	
28	p33	charger	08/12/03	compal	DFX request	PQ10 PQ11 PQ13 PQ14 PQ15	
29	p36	+1.05VALWP/1.0VP	08/12/03	compal	adjust +1.0VSP OCP set	PR102 PR107	
30	p36	+1.05VALWP/1.0VP	08/12/03	compal	adjust +1.0VSP output voltage	PR99	
31	p35	+1.5VSP	08/12/12	compal	design change(already trail run in PT phase)	PQ22	
32	p39	BATTERY CONN	08/12/12	compal	adjust OTP set	PR183	
33	p33	charger	08/12/31	compal	reduce AC-IN inrush current	PR24 PR25	
34	p36	+1.05VALWP/1.0VP	08/12/31	compal	WWAN issue	PC173 PC174 PC175	
34	p34	+3VALWP/+5VALWP	08/12/31	compal	adjust +5VALWP voltage	PR62 change frome 10k to 9.62k	

Security Classification	Compal Secret Data		
Issued Date	2007/1/15	Deciphered Date	2008/1/15

THIS SHEET OF ENGINEERING DRAWING IS THE PROPRIETARY PROPERTY OF COMPAL ELECTRONICS, INC. AND CONTAINS CONFIDENTIAL AND TRADE SECRET INFORMATION. THIS SHEET MAY NOT BE TRANSFERED FROM THE CUSTODY OF THE COMPETENT DIVISION OF R&D DEPARTMENT EXCEPT AS AUTHORIZED BY COMPAL ELECTRONICS, INC. NEITHER THIS SHEET NOR THE INFORMATION IT CONTAINS MAY BE USED BY OR DISCLOSED TO ANY THIRD PARTY WITHOUT PRIOR WRITTEN CONSENT OF COMPAL ELECTRONICS, INC.

Compal Electronics, Inc.

Title: **PW PIR-1**

Size: Custom | Document Number: **KCM00** | Rev: 1.0

Date: Tuesday, February 24, 2009 | Sheet 40 of 10

Braxton Power block

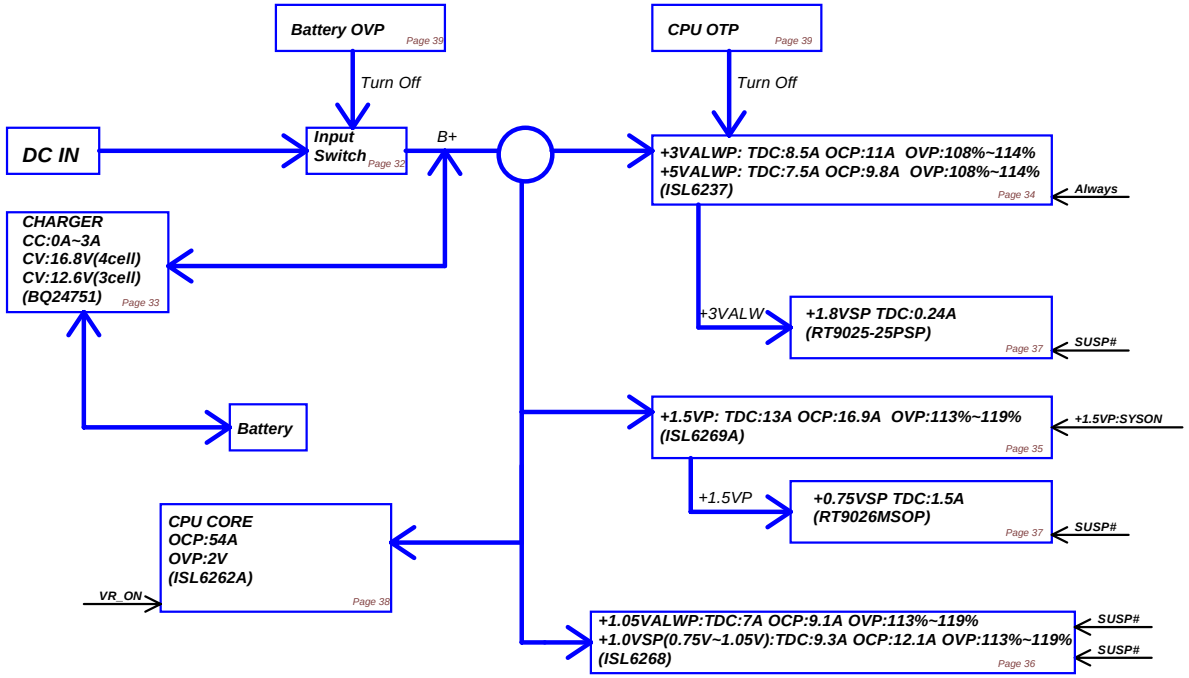

Title	<Title>		
Size	Document Number		Rev
Custom	<Doc>		1.0
Date:	Tuesday, February 24, 2009	Sheet 41 of 10	

Version Change List (P. I. R. List) Page 1/1

Item	Page#	Title	Date	Request Owner	Issue Description	Solution Description	Rev.
1	19	P19-DDR3_SO-DIMM SLOT	2008/09/22	nVidia	can't use SO-DIMM	change SO-DIMM SA0 to pull high & SA1 to pull down	0.2
2	20	P20-LCD/SATA HDD	2008/09/25	Compal	can't read EDID for Panel	change JLVDS1 Pin 37 from +LCDVDD TO +3VS	0.2
3	21	P21-HDMI/Display Port	2008/10/07	Compal	Change DP122 to DP122A	change R440 from 4.64K to 5.11K and R438 from 5.11K to 6.49K	0.2
4	12	P12-MCP79(6/10)_PCI/LPC	2008/10/13	Compal	can't select on board SPD data	ADD R191,R192,R193 TO SELECT ON BOARD MEMORY VENDOR	0.2
5	28	P28-EC_KB926/BIOS/Reed SW	2008/10/20	Compal		Change EC_SMB_DA1 and EC_SMB_CK1 from +5VALW to +3VALW	0.2
6	18	P18-1GB/2GB_DDR3_On Board	2008/12/04	nVidia	On board Ram unstable	Add 0.1uF cap between Termination Resistor and +0.75VS	0.4
7	14	P14-MCP79(8/10)_HDA/MISC	2009/02/03	Dell	saving power consumption	change +3VALW to +3VS on MEM_SMBCLK & MEM_SMBDATA	1.0
8	24	P24-Mini Card_WLAN/WWAN	2009/02/04	Dell		reserve SMBus from MCP79	1.0
9							
10							
11							
12							
13							
14							
15							
16							
17							
18							
19							
20							
21							
22							
23							
24							
25							
26							
27							
28							
29							
30							
31							
32							

Security Classification	Compal Secret Data		
Issued Date	2009/02/19	Deciphered Date	2009/12/31

THIS SHEET OF ENGINEERING DRAWING IS THE PROPRIETARY PROPERTY OF COMPAL ELECTRONICS, INC. AND CONTAINS CONFIDENTIAL AND TRADE SECRET INFORMATION. THIS SHEET MAY NOT BE TRANSFERED FROM THE CUSTODY OF THE COMPETENT DIVISION OF R&D DEPARTMENT EXCEPT AS AUTHORIZED BY COMPAL ELECTRONICS, INC. NEITHER THIS SHEET NOR THE INFORMATION IT CONTAINS MAY BE USED BY OR DISCLOSED TO ANY THIRD PARTY WITHOUT PRIOR WRITTEN CONSENT OF COMPAL ELECTRONICS, INC.

Compal Electronics, Inc.

Title: **EE PIR-1**

Size: Custom | Document Number: *LA-4631P* | Rev: 1.0

Date: Thursday, February 19, 2009 | Sheet 42 of 42