Compal Confidential

NTV00

LA-5662 Rev 0.2 Schematics

Intel PineView Processor/ Tiger point

2010-05-10 REV : 1.0

Security Classification	Compal Secret Data			Compal Electronics, Inc.
Issued Date	2010/02/02	Deciphered Date	2011/02/02	Title: SCHEMATIC MB A5662
Size: Custom	Document Number: 401898			Rev: B
Date: Friday, June 04, 2010	Sheet 1 of 36			

THIS SHEET OF ENGINEERING DRAWING IS THE PROPRIETARY PROPERTY OF COMPAL ELECTRONICS, INC. AND CONTAINS CONFIDENTIAL AND TRADE SECRET INFORMATION. THIS SHEET MAY NOT BE TRANSFERED FROM THE CUSTODY OF THE COMPETENT DIVISION OF R&D DEPARTMENT EXCEPT AS AUTHORIZED BY COMPAL ELECTRONICS, INC. NEITHER THIS SHEET NOR THE INFORMATION IT CONTAINS MAY BE USED BY OR DISCLOSED TO ANY THIRD PARTY WITHOUT PRIOR WRITTEN CONSENT OF COMPAL ELECTRONICS, INC.

Compal Confidential

Model Name : NTV00
File Name : LA-5661P

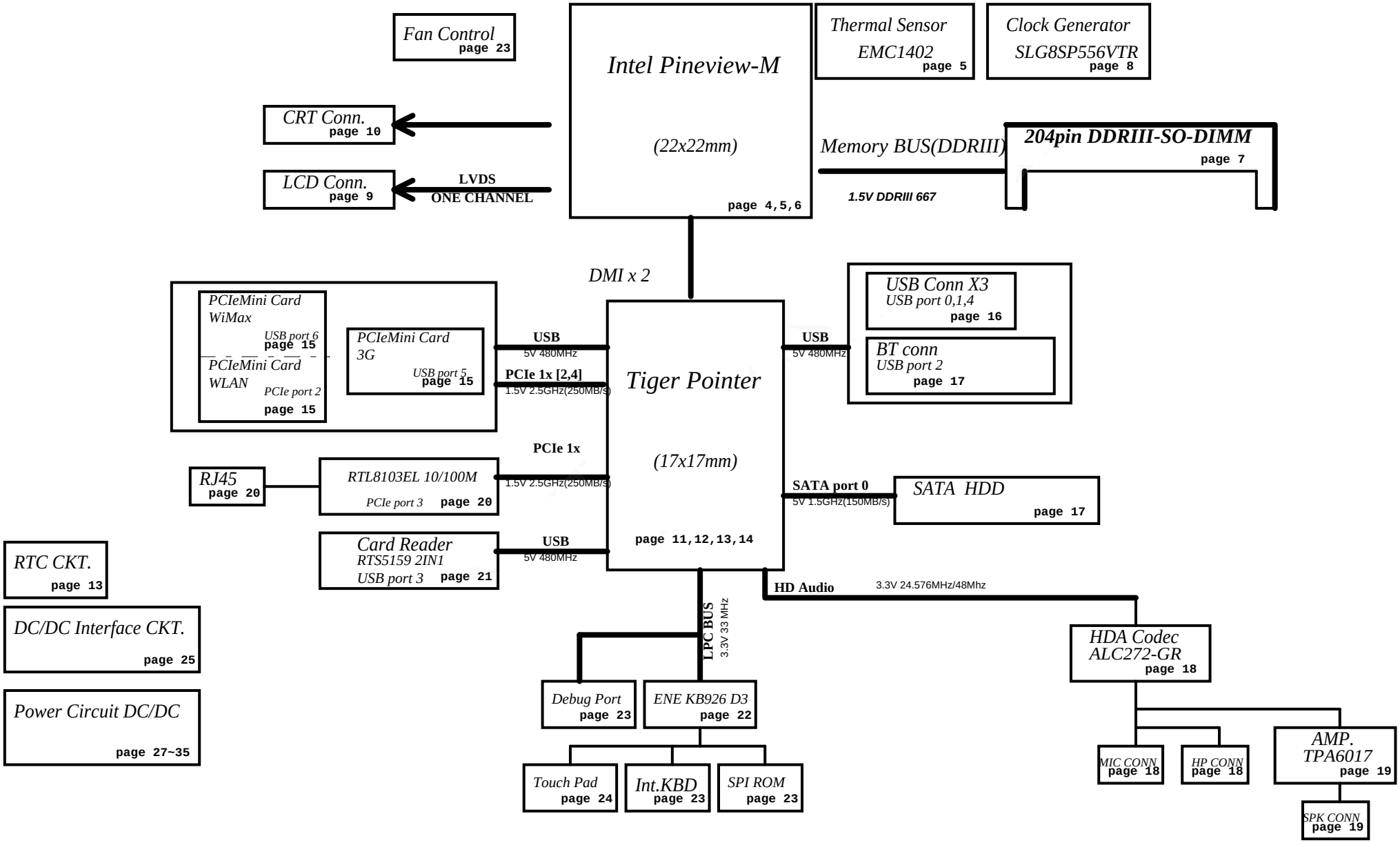

Security Classification	Compal Secret Data		
Issued Date	2010/02/02	Deciphered Date	2011/02/02

THIS SHEET OF ENGINEERING DRAWING IS THE PROPRIETARY PROPERTY OF COMPAL ELECTRONICS, INC. AND CONTAINS CONFIDENTIAL AND TRADE SECRET INFORMATION. THIS SHEET MAY NOT BE TRANSFERED FROM THE CUSTODY OF THE COMPETENT DIVISION OF R&D DEPARTMENT EXCEPT AS AUTHORIZED BY COMPAL ELECTRONICS, INC. NEITHER THIS SHEET NOR THE INFORMATION IT CONTAINS MAY BE USED BY OR DISCLOSED TO ANY THIRD PARTY WITHOUT PRIOR WRITTEN CONSENT OF COMPAL ELECTRONICS, INC.

Compal Electronics, Inc.

Title: SCHEMATIC MB A5662

Size | Document Number: 401898 | Rev: B

Date: Friday, June 04, 2010 | Sheet 2 of 36

Voltage Rails

Power Plane	Description	S1	S3	S5	G3
VIN	Adapter power supply (19V)	ON	ON	ON	OFF
B+	AC or battery power rail for power circuit.	ON	ON	ON	ON
+CPU_CORE	Core voltage for CPU	ON	OFF	OFF	OFF
+0.89VS	0.89VS GFX support voltage	ON	OFF	OFF	OFF
+0.75VS	0.75V switched power rail for DDR terminator	ON	OFF	OFF	OFF
+1.05VS	VCCP switched power rail	ON	OFF	OFF	OFF
+1.5VS	1.5V switched power rail	ON	OFF	OFF	OFF
+1.5V	1.5V power rail for DDR	ON	ON	OFF	OFF
+1.8VS	1.8VS switched power rail	ON	OFF	OFF	OFF
+3VALW	3.3V always on power rail	ON	ON	ON	OFF
+3V_SB	3.3V power rail for LAN	ON	ON	OFF	OFF
+3V_LAN	3.3V power rail for LAN	ON	ON	OFF	OFF
+RTCVCC	RTC power	ON	ON	ON	ON
+3VS	3.3V switched power rail	ON	OFF	OFF	OFF
+5VALW	5V always on power rail	ON	ON	ON	OFF
+5V_SB	5V power rail for SB	ON	ON	OFF	OFF
+5VS	5V switched power rail	ON	OFF	OFF	OFF
+VSB	VSB always on power rail	ON	ON	ON	OFF

Note : ON* means that this power plane is ON only with AC power available, otherwise it is OFF.

STATE \ SIGNAL	SLP_S3#	SLP_S4#	SLP_S5#	+VALW	+V	+VS	Clock
Full ON	HIGH	HIGH	HIGH	ON	ON	ON	ON
S1(Power On Suspend)	HIGH	HIGH	HIGH	ON	ON	ON	LOW
S3 (Suspend to RAM)	LOW	HIGH	HIGH	ON	ON	OFF	OFF
S4 (Suspend to Disk)	LOW	LOW	HIGH	ON	OFF	OFF	OFF
S5 (Soft OFF)	LOW	LOW	LOW	ON	OFF	OFF	OFF

BTO Option Table

Function	Mini PCI-E SLOT				STAR			
description								
explain	Wi-Fi	WiMax	3G		POWER SAVING			
BTO	WLAN@	WIMAX@	3G@		STAR@			

Function			
description			
explain			
BTO			

EC SM Bus1 address

Device	Address
Smart Battery	0001 011X b

EC SM Bus2 address

Device	Address
EMC1402	1001 010X b

Tiger point SM Bus address

Device	Address
Clock Generator (SLG8SP556VTR)	1101 001Xb
DDR DIMMA	1010 000Xb

COMPAL SECRET DATA

THIS SHEET OF ENGINEERING DRAWING IS THE PROPRIETARY PROPERTY OF COMPAL ELECTRONICS, INC. AND CONTAINS CONFIDENTIAL AND TRADE SECRET INFORMATION. THIS SHEET MAY NOT BE TRANSFERED FROM THE CUSTODY OF THE COMPETENT DIVISION OF R&D DEPARTMENT EXCEPT AS AUTHORIZED BY COMPAL ELECTRONICS, INC. NEITHER THIS SHEET NOR THE INFORMATION IT CONTAINS MAY BE USED BY OR DISCLOSED TO ANY THIRD PARTY WITHOUT PRIOR WRITTEN CONSENT OF COMPAL ELECTRONICS, INC.

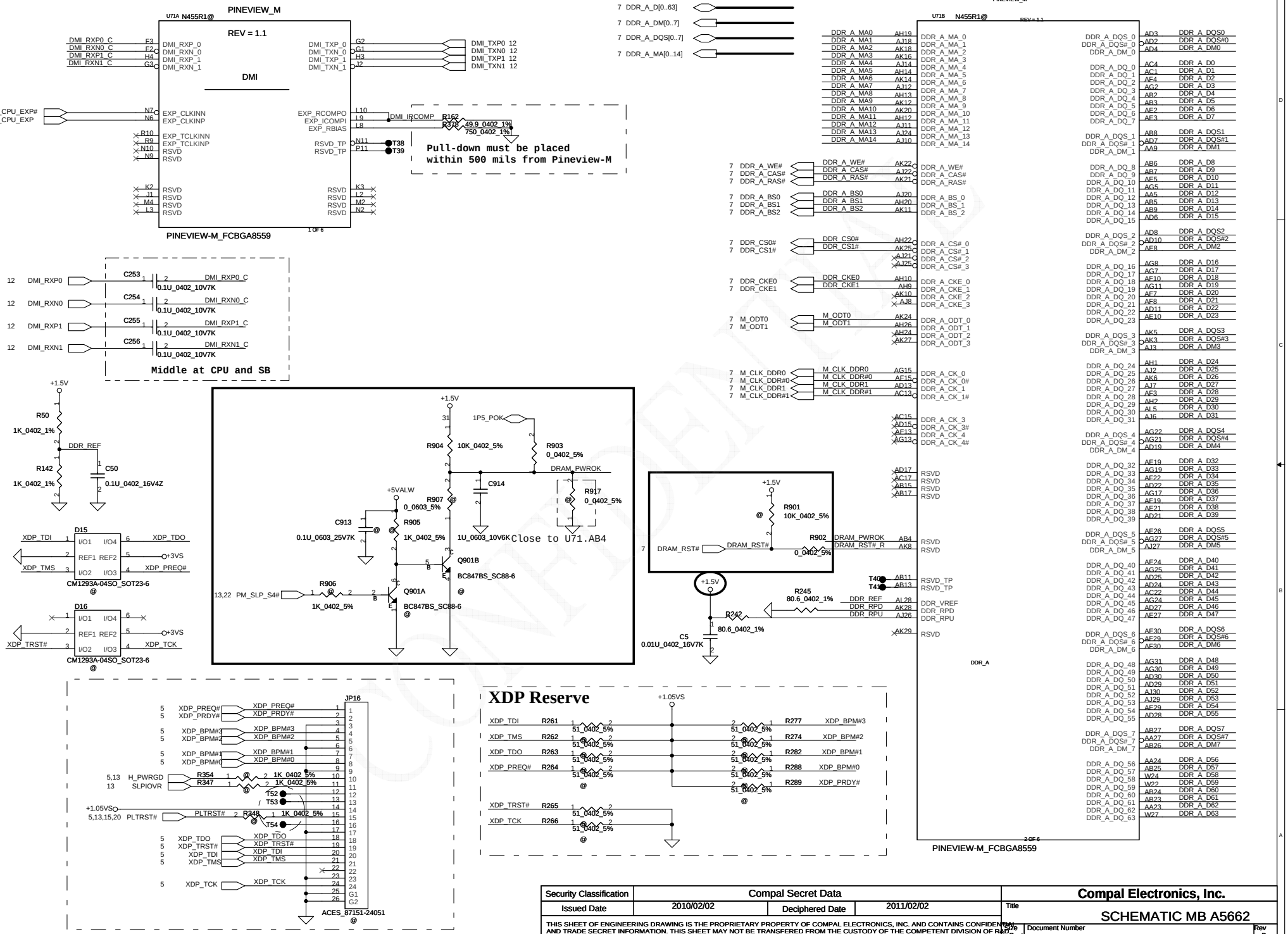
PINEVIEW_M
U71A N455R1@
REV = 1.1
DMI
PINEVIEW-M_FCBGA8559
Pull-down must be placed within 500 mils from Pineview-M
Middle at CPU and SB
Close to U71.AB4
U71B N455R1@
PINEVIEW-M_FCBGA8559
DDR_A
XDP Reserve
JP16
ACES_87151-24051
CM1293A-04SO_SOT23-6
Security Classification
Compal Secret Data
Issued Date
2010/02/02
Deciphered Date
2011/02/02
Compal Electronics, Inc.
Title
SCHEMATIC MB A5662
Size
Custom
Document Number
401898
Rev
B
Date: Friday, June 04, 2010
Sheet 4 of 36

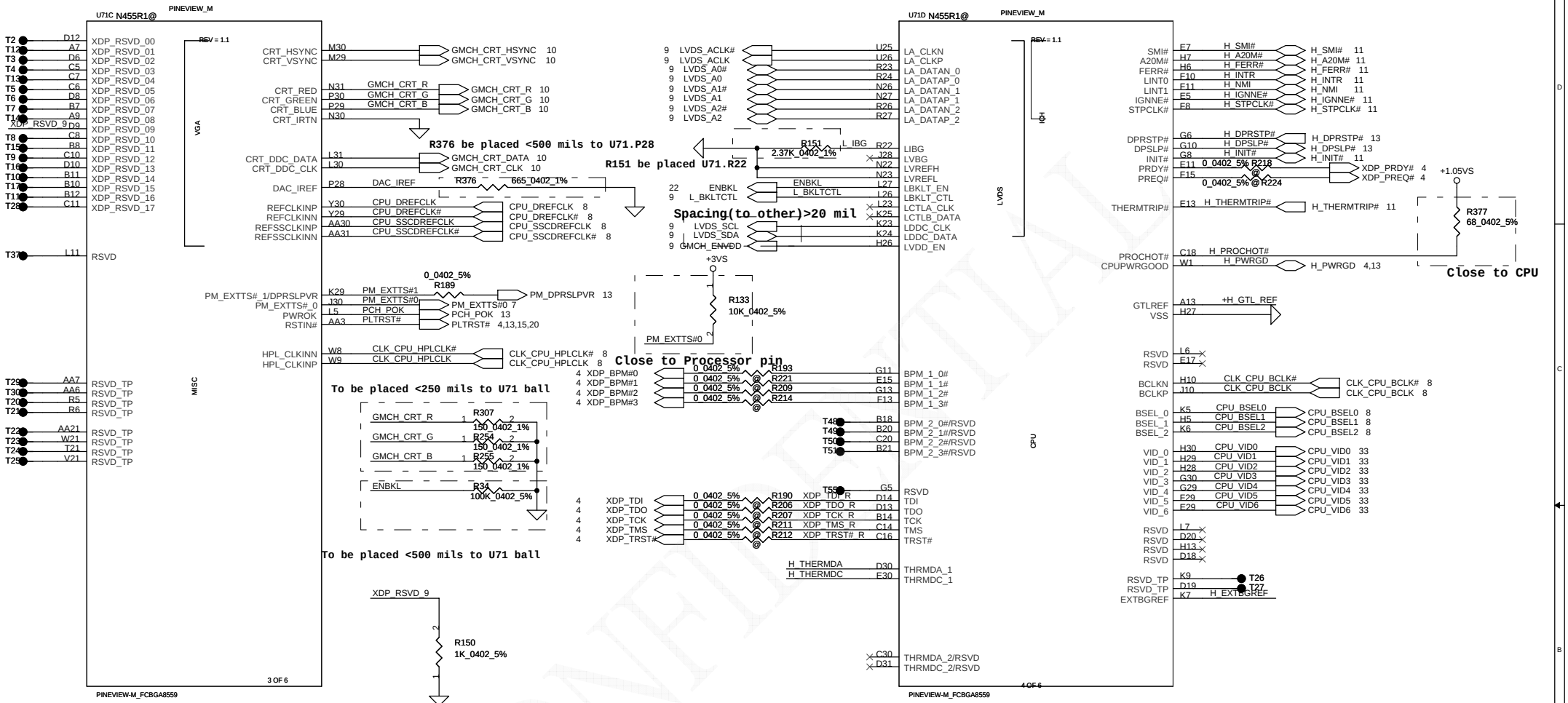

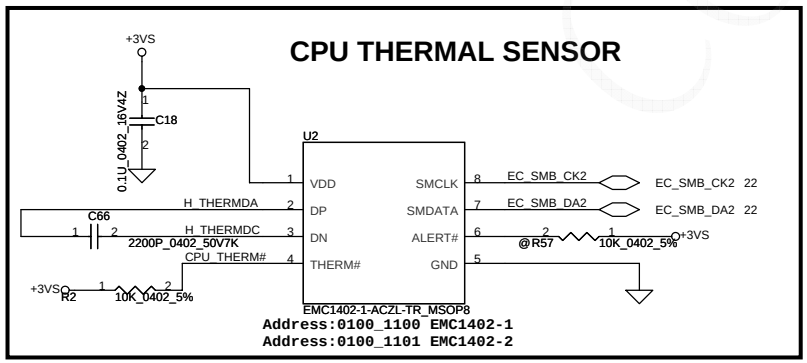

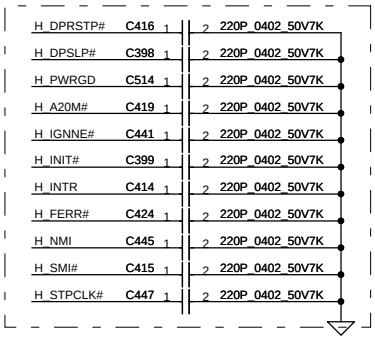

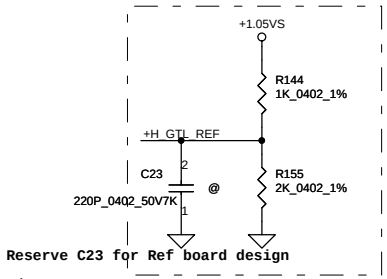

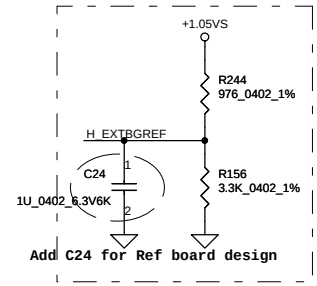

Security Classification	Compal Secret Data		
Issued Date	2010/02/02	Deciphered Date	2011/02/02

THIS SHEET OF ENGINEERING DRAWING IS THE PROPRIETARY PROPERTY OF COMPAL ELECTRONICS, INC. AND CONTAINS CONFIDENTIAL AND TRADE SECRET INFORMATION. THIS SHEET MAY NOT BE TRANSFERED FROM THE CUSTODY OF THE COMPETENT DIVISION OF R&D DEPARTMENT EXCEPT AS AUTHORIZED BY COMPAL ELECTRONICS, INC. NEITHER THIS SHEET NOR THE INFORMATION IT CONTAINS MAY BE USED BY OR DISCLOSED TO ANY THIRD PARTY WITHOUT PRIOR WRITTEN CONSENT OF COMPAL ELECTRONICS, INC.

Compal Electronics, Inc.

Title: SCHEMATIC MB A5662

Size: B | Document Number: 401898 | Rev: B

Date: Friday, June 04, 2010 | Sheet 5 of 36

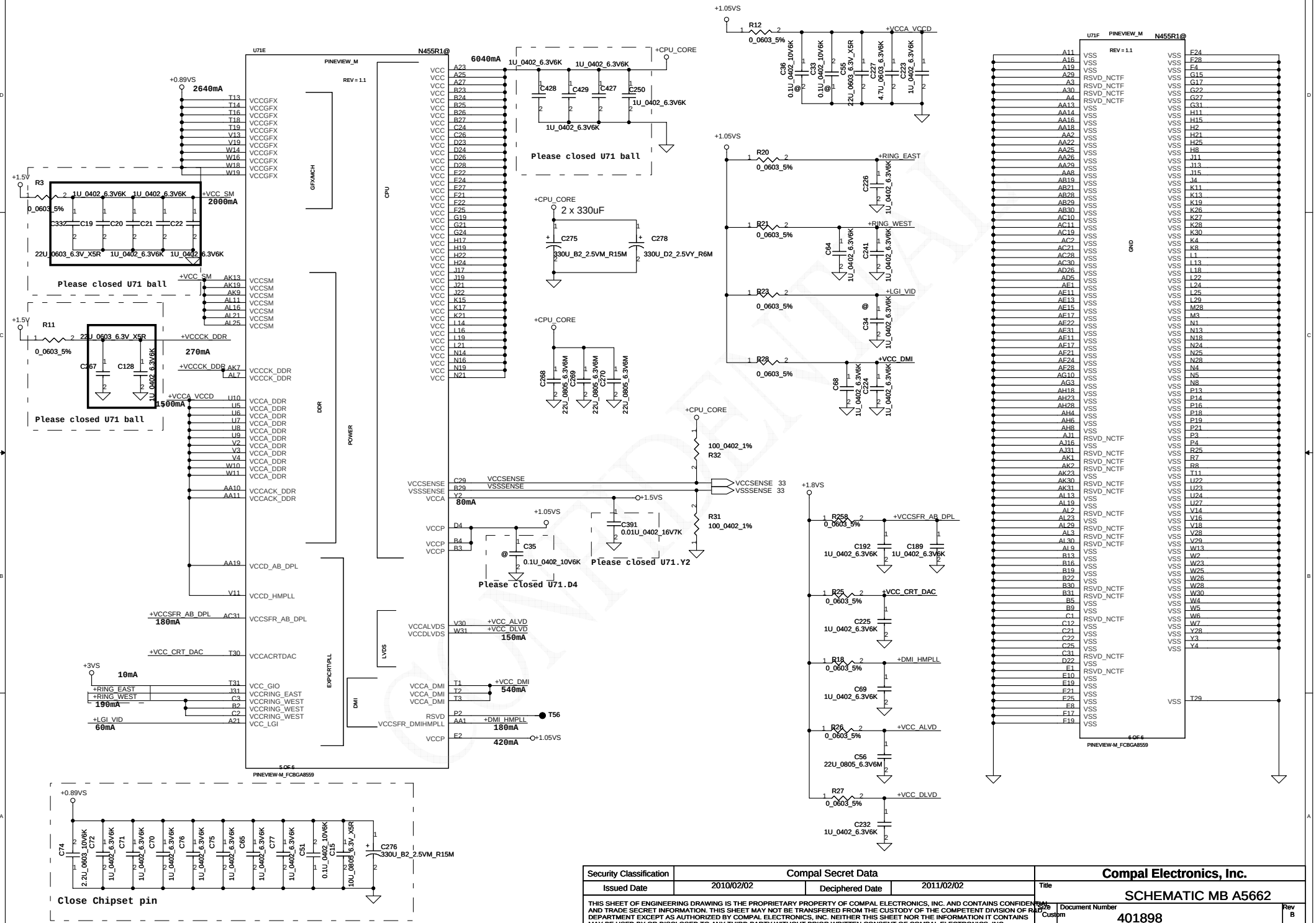

Security Classification	Compal Secret Data		
Issued Date	2010/02/02	Deciphered Date	2011/02/02

THIS SHEET OF ENGINEERING DRAWING IS THE PROPRIETARY PROPERTY OF COMPAL ELECTRONICS, INC. AND CONTAINS CONFIDENTIAL AND TRADE SECRET INFORMATION. THIS SHEET MAY NOT BE TRANSFERRED FROM THE CUSTODY OF THE COMPETENT DIVISION OF R&D DEPARTMENT EXCEPT AS AUTHORIZED BY COMPAL ELECTRONICS, INC. NEITHER THIS SHEET NOR THE INFORMATION IT CONTAINS MAY BE USED BY OR DISCLOSED TO ANY THIRD PARTY WITHOUT PRIOR WRITTEN CONSENT OF COMPAL ELECTRONICS, INC.

Compal Electronics, Inc.

Title: SCHEMATIC MB A5662

Size: Custom | Document Number: 401898 | Rev: B

Date: Friday, June 04, 2010 | Sheet 6 of 36

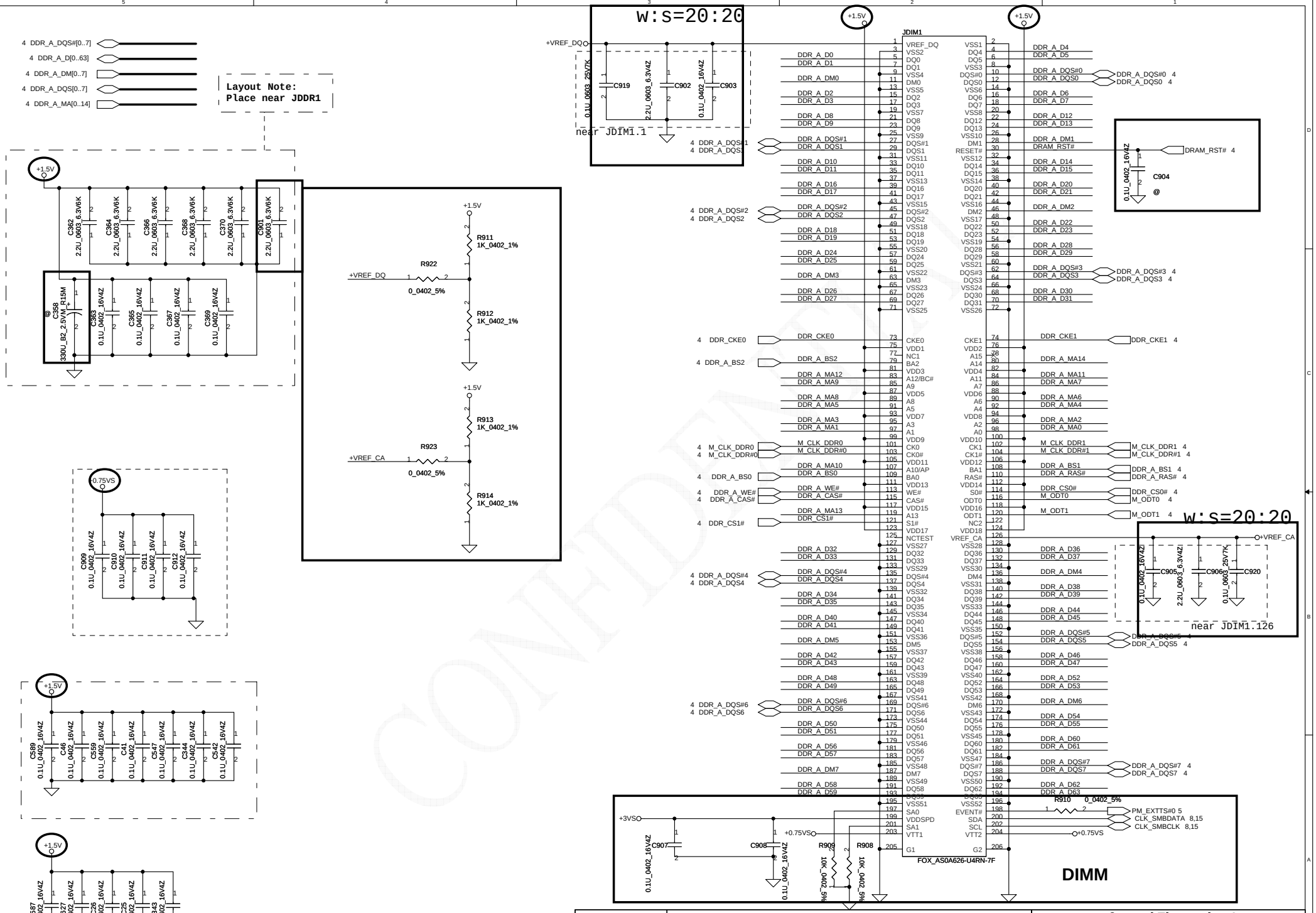

Security Classification	Compal Secret Data			Compal Electronics, Inc.
Issued Date	2010/02/02	Deciphered Date	2011/02/02	Title: SCHEMATIC MB A5662
				Size: Custom; Document Number: 401898; Rev: B
				Date: Friday, June 04, 2010; Sheet 7 of 36

THIS SHEET OF ENGINEERING DRAWING IS THE PROPRIETARY PROPERTY OF COMPAL ELECTRONICS, INC. AND CONTAINS CONFIDENTIAL AND TRADE SECRET INFORMATION. THIS SHEET MAY NOT BE TRANSFERRED FROM THE CUSTODY OF THE COMPETENT DIVISION OF R&D DEPARTMENT EXCEPT AS AUTHORIZED BY COMPAL ELECTRONICS, INC. NEITHER THIS SHEET NOR THE INFORMATION IT CONTAINS MAY BE USED BY OR DISCLOSED TO ANY THIRD PARTY WITHOUT PRIOR WRITTEN CONSENT OF COMPAL ELECTRONICS, INC.

FSC CLKSEL2	FSB CLKSEL1	FSA CLKSEL0	CPU MHz	SRC MHz	PCI MHz	REF MHz	DOT_96 MHz	USB MHz
0	0	0	266	100	33.3	14.318	96.0	48.0
0	0	1	133	100	33.3	14.318	96.0	48.0
0	1	0	200	100	33.3	14.318	96.0	48.0
0	1	1	166	100	33.3	14.318	96.0	48.0
1	0	0	333	100	33.3	14.318	96.0	48.0
1	0	1	100	100	33.3	14.318	96.0	48.0
1	1	0	400	100	33.3	14.318	96.0	48.0
1	1	1	Reserved					

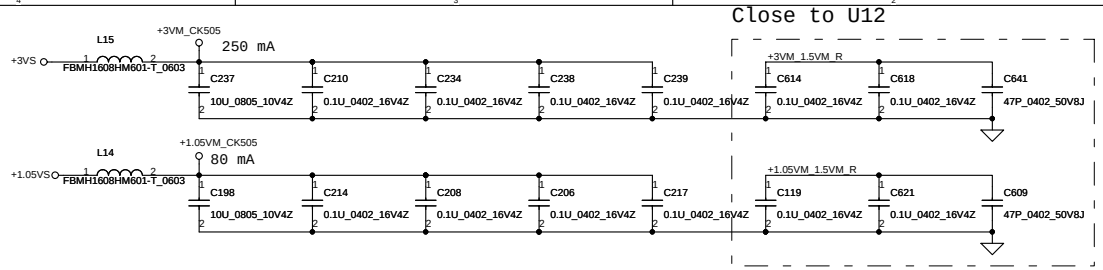

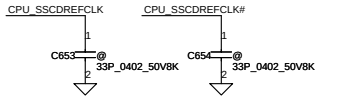

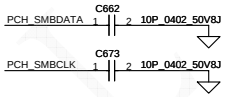

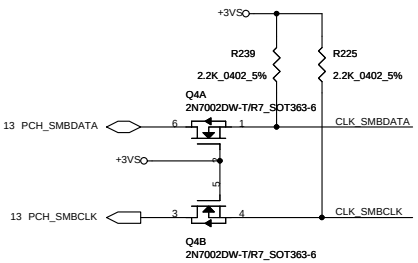

SA000020K00 (Silego : SLG8SP556VTR)

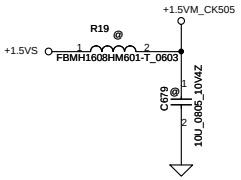

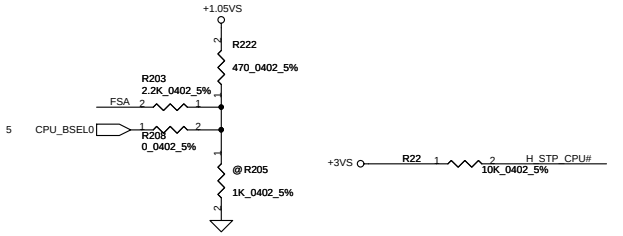

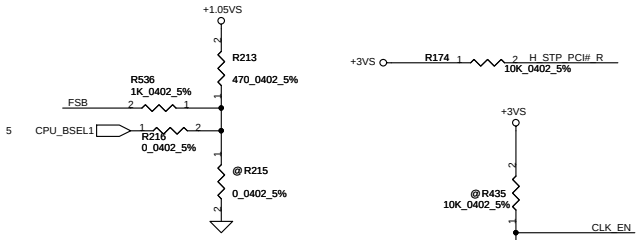

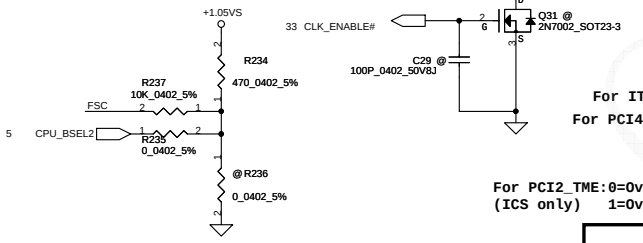

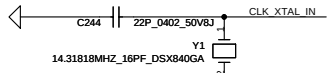

Routing the trace at least 10mil

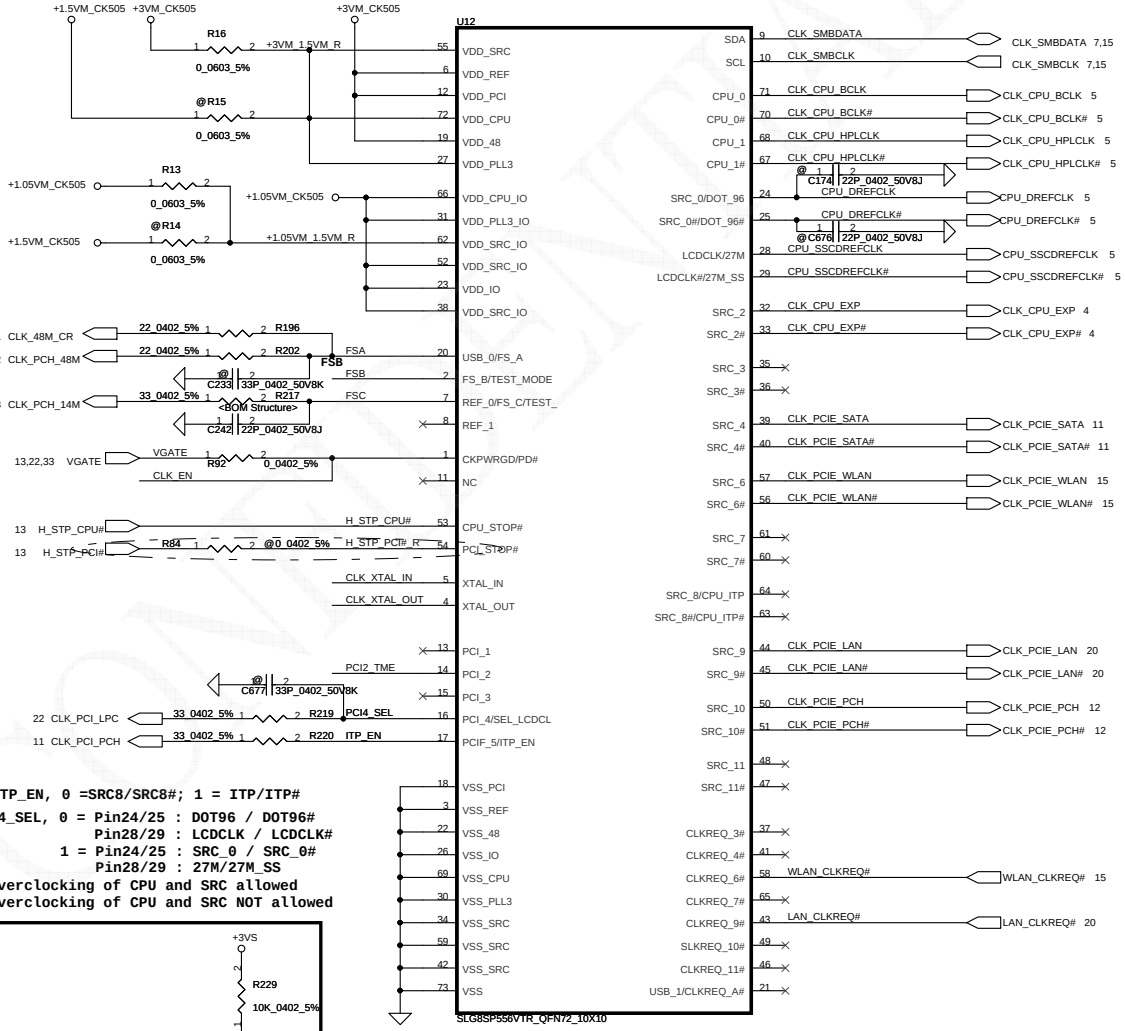

For ITP_EN, 0 =SRC8/SRC8#; 1 = ITP/ITP#

For PCI4_SEL, 0 = Pin24/25 : DOT96 / DOT96#
Pin28/29 : LCDCLK / LCDCLK#
1 = Pin24/25 : SRC_0 / SRC_0#
Pin28/29 : 27M/27M_SS

For PCI2_TME:0=Overclocking of CPU and SRC allowed
(ICS only) 1=Overclocking of CPU and SRC NOT allowed

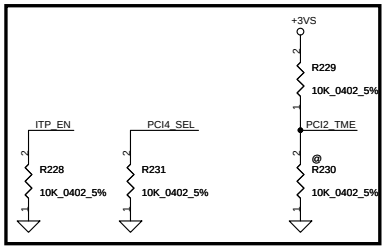

SRC PORT LIST

PORT	DEVICE
SRC0	CPU_DREFCLK
SRC2	CPU_EXP
SRC3	
SRC4	PCIE_SATA
SRC6	PCIE_WLAN
SRC7	
SRC8	
SRC9	PCIE_LAN
SRC10	PCIE_PCH
SRC11	

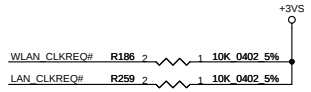

REQ PORT LIST

PORT	DEVICE
REQ_3#	
REQ_4#	
REQ_6#	PEIC_WLAN
REQ_7#	
REQ_9#	PCIE_LAN
REQ_10#	
REQ_11#	
REQ_A#	

Security Classification	Compal Secret Data		
Issued Date	2010/02/02	Deciphered Date	2011/02/02

THIS SHEET OF ENGINEERING DRAWING IS THE PROPRIETARY PROPERTY OF COMPAL ELECTRONICS, INC. AND CONTAINS CONFIDENTIAL AND TRADE SECRET INFORMATION. THIS SHEET MAY NOT BE TRANSFERED FROM THE CUSTODY OF THE COMPETENT DIVISION OF R&D DEPARTMENT EXCEPT AS AUTHORIZED BY COMPAL ELECTRONICS, INC. NEITHER THIS SHEET NOR THE INFORMATION IT CONTAINS MAY BE USED BY OR DISCLOSED TO ANY THIRD PARTY WITHOUT PRIOR WRITTEN CONSENT OF COMPAL ELECTRONICS, INC.

Compal Electronics, Inc.

Title: SCHEMATIC MB A5662

Size | Document Number: 401898 | Rev: B

Date: Friday, June 04, 2010 | Sheet 8 of 36

LCD POWER CIRCUIT

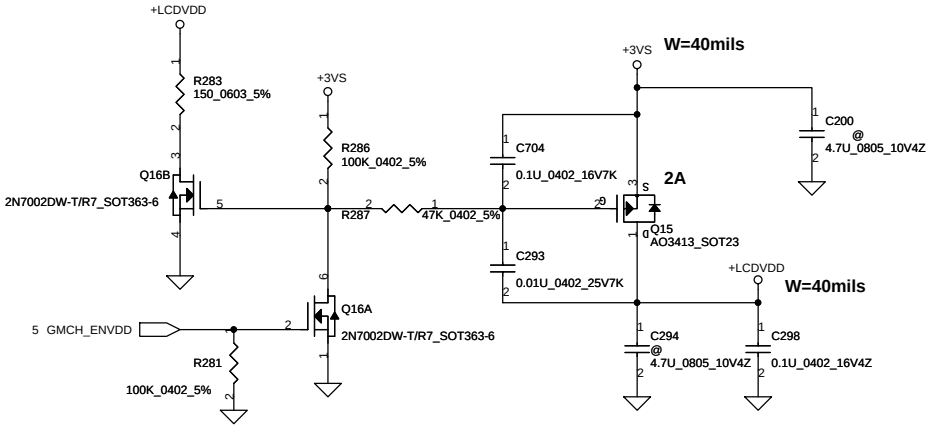

LED/PANEL BD. Conn.

Combine INT.CARMERA with LVDS

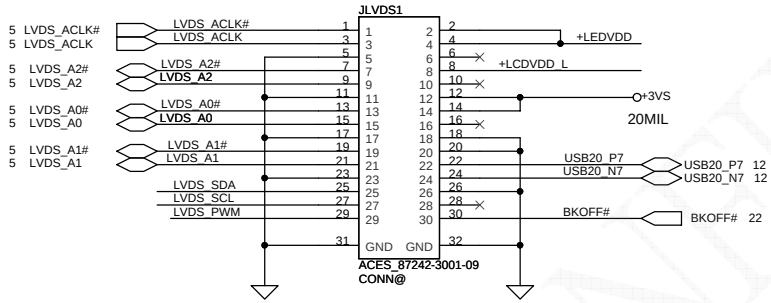

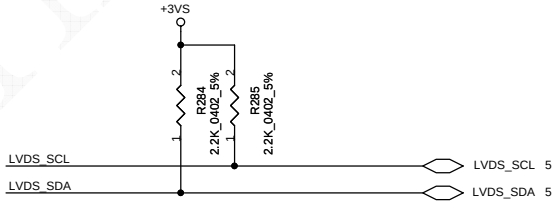

Option panel brightness control

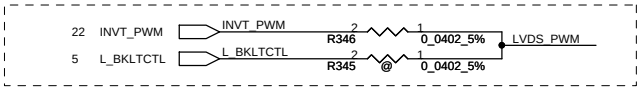

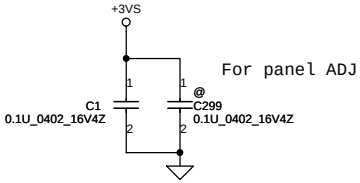

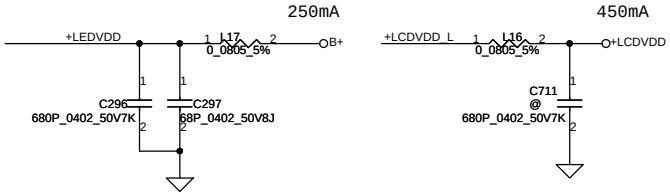

CONFIDENTIAL

Security Classification	Compal Secret Data		
Issued Date	2010/02/02	Deciphered Date	2011/02/02

THIS SHEET OF ENGINEERING DRAWING IS THE PROPRIETARY PROPERTY OF COMPAL ELECTRONICS, INC. AND CONTAINS CONFIDENTIAL AND TRADE SECRET INFORMATION. THIS SHEET MAY NOT BE TRANSFERED FROM THE CUSTODY OF THE COMPETENT DIVISION OF R&D DEPARTMENT EXCEPT AS AUTHORIZED BY COMPAL ELECTRONICS, INC. NEITHER THIS SHEET NOR THE INFORMATION IT CONTAINS MAY BE USED BY OR DISCLOSED TO ANY THIRD PARTY WITHOUT PRIOR WRITTEN CONSENT OF COMPAL ELECTRONICS, INC.

Compal Electronics, Inc.

Title: SCHEMATIC MB A5662

Size | Document Number: 401898 | Rev: B

Date: Friday, June 04, 2010 | Sheet 9 of 36

CRT CONNECTOR

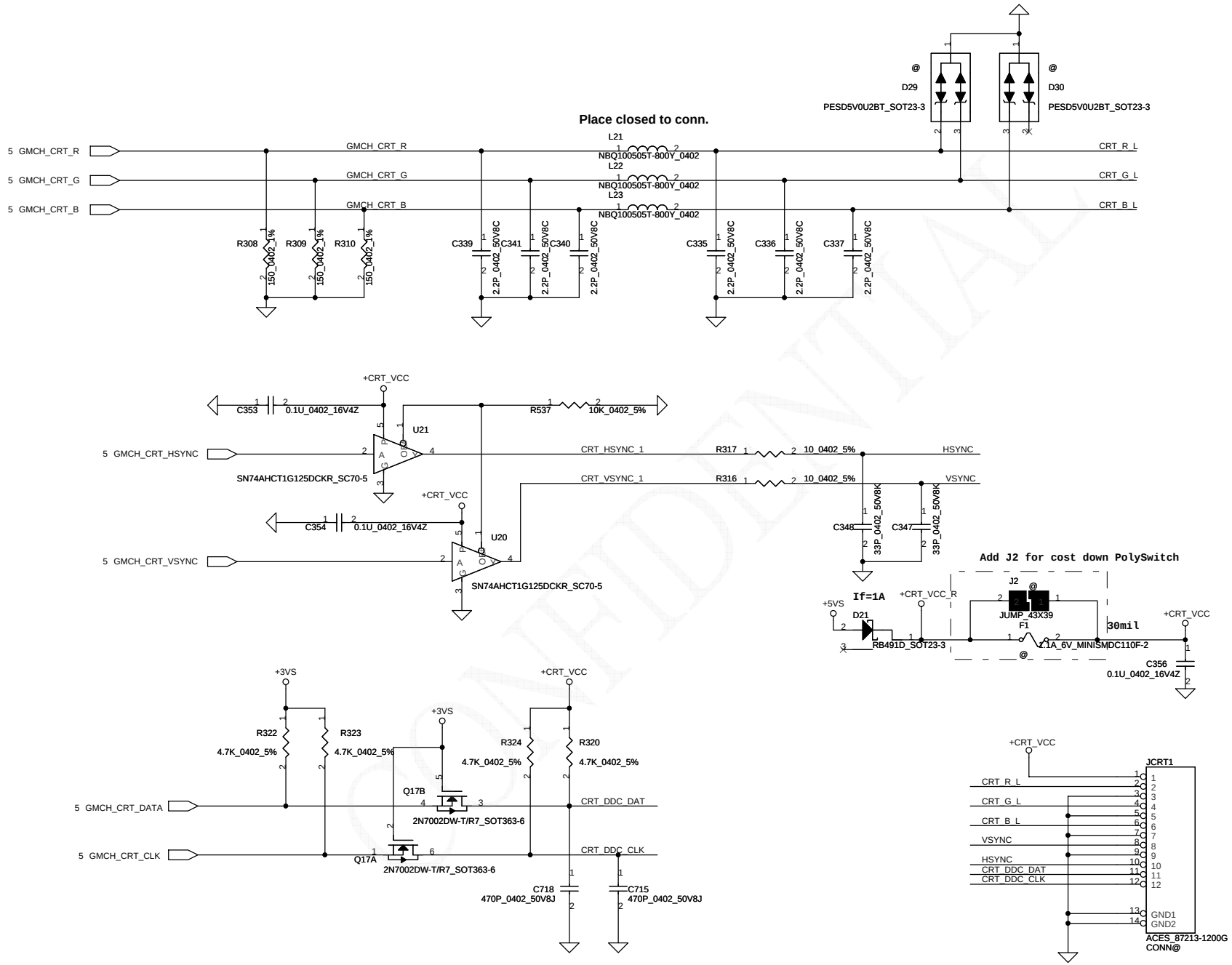

CONFIDENTIAL

Security Classification	Compal Secret Data		
Issued Date	2010/02/02	Deciphered Date	2011/02/02

THIS SHEET OF ENGINEERING DRAWING IS THE PROPRIETARY PROPERTY OF COMPAL ELECTRONICS, INC. AND CONTAINS CONFIDENTIAL AND TRADE SECRET INFORMATION. THIS SHEET MAY NOT BE TRANSFERED FROM THE CUSTODY OF THE COMPETENT DIVISION OF R&D DEPARTMENT EXCEPT AS AUTHORIZED BY COMPAL ELECTRONICS, INC. NEITHER THIS SHEET NOR THE INFORMATION IT CONTAINS MAY BE USED BY OR DISCLOSED TO ANY THIRD PARTY WITHOUT PRIOR WRITTEN CONSENT OF COMPAL ELECTRONICS, INC.

Compal Electronics, Inc.

Title: SCHEMATIC MB A5662

Size | Document Number: 401898 | Rev: B

Date: Friday, June 04, 2010 | Sheet 10 of 36

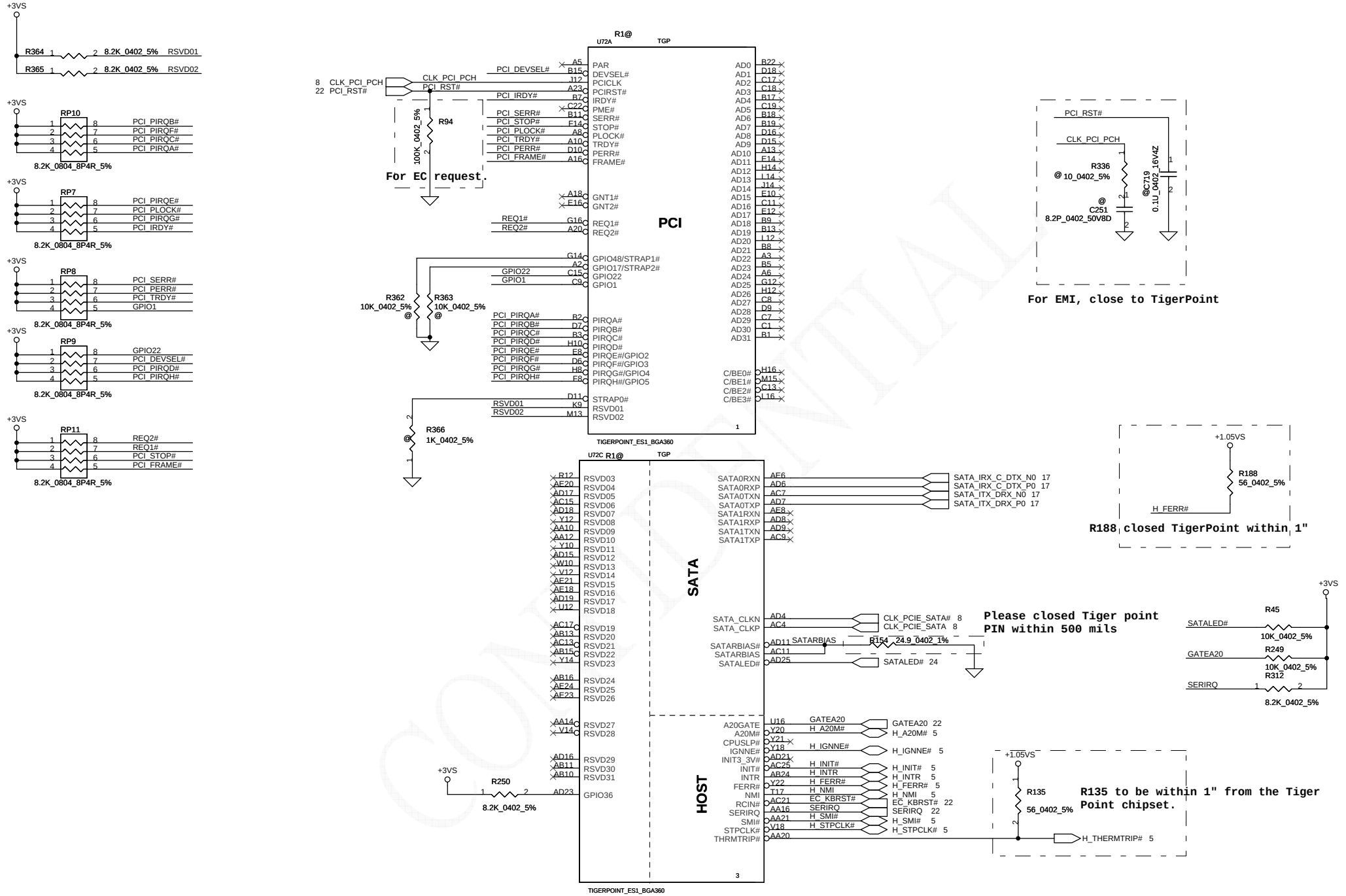

Security Classification	Compal Secret Data		
Issued Date	2010/02/02	Deciphered Date	2011/02/02

THIS SHEET OF ENGINEERING DRAWING IS THE PROPRIETARY PROPERTY OF COMPAL ELECTRONICS, INC. AND CONTAINS CONFIDENTIAL AND TRADE SECRET INFORMATION. THIS SHEET MAY NOT BE TRANSFERED FROM THE CUSTODY OF THE COMPETENT DIVISION OF R&D DEPARTMENT EXCEPT AS AUTHORIZED BY COMPAL ELECTRONICS, INC. NEITHER THIS SHEET NOR THE INFORMATION IT CONTAINS MAY BE USED BY OR DISCLOSED TO ANY THIRD PARTY WITHOUT PRIOR WRITTEN CONSENT OF COMPAL ELECTRONICS, INC.

Compal Electronics, Inc.

Title: SCHEMATIC MB A5662

Size | Document Number: 401898 | Rev: B

Date: Friday, June 04, 2010 | Sheet 11 of 36

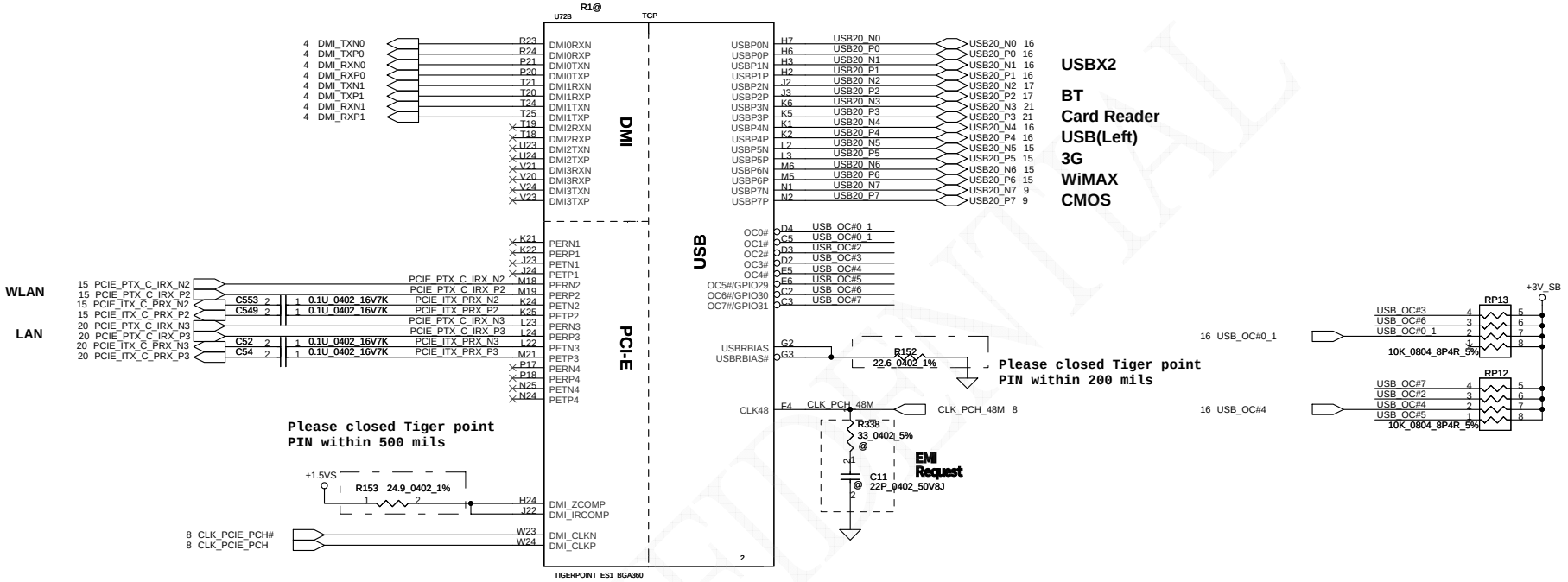

Security Classification	Compal Secret Data			Compal Electronics, Inc.
Issued Date	2010/02/02	Deciphered Date	2011/02/02	Title: SCHEMATIC MB A5662
THIS SHEET OF ENGINEERING DRAWING IS THE PROPRIETARY PROPERTY OF COMPAL ELECTRONICS, INC. AND CONTAINS CONFIDENTIAL AND TRADE SECRET INFORMATION. THIS SHEET MAY NOT BE TRANSFERED FROM THE CUSTODY OF THE COMPETENT DIVISION OF R&D DEPARTMENT EXCEPT AS AUTHORIZED BY COMPAL ELECTRONICS, INC. NEITHER THIS SHEET NOR THE INFORMATION IT CONTAINS MAY BE USED BY OR DISCLOSED TO ANY THIRD PARTY WITHOUT PRIOR WRITTEN CONSENT OF COMPAL ELECTRONICS, INC.				Size: Custom / Document Number: 401898 / Rev: B
				Date: Friday, June 04, 2010 / Sheet 12 of 36

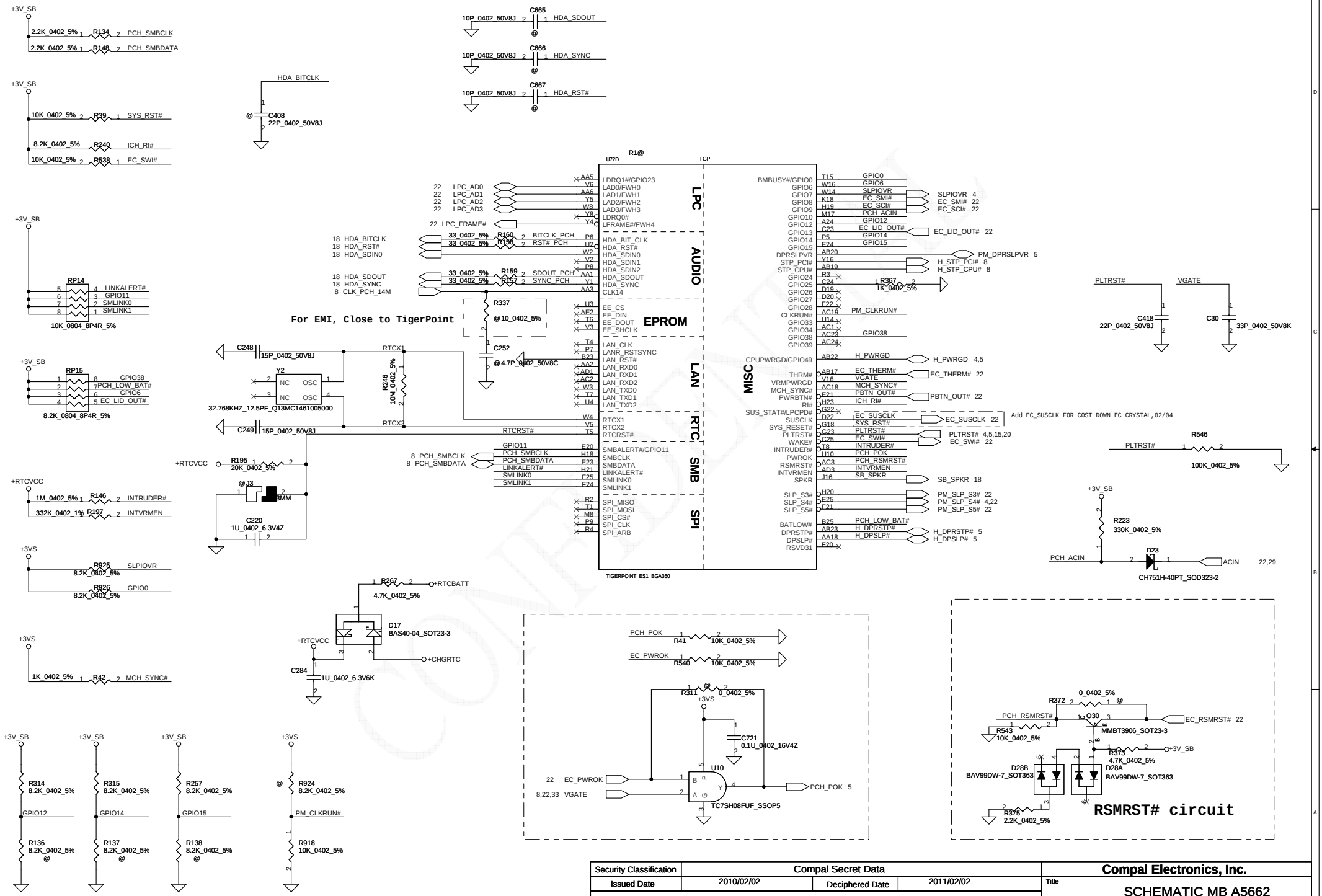

Security Classification	Compal Secret Data			Compal Electronics, Inc.
Issued Date	2010/02/02	Deciphered Date	2011/02/02	Title: SCHEMATIC MB A5662
THIS SHEET OF ENGINEERING DRAWING IS THE PROPRIETARY PROPERTY OF COMPAL ELECTRONICS, INC. AND CONTAINS CONFIDENTIAL AND TRADE SECRET INFORMATION. THIS SHEET MAY NOT BE TRANSFERED FROM THE CUSTODY OF THE COMPETENT DIVISION OF R&D DEPARTMENT EXCEPT AS AUTHORIZED BY COMPAL ELECTRONICS, INC. NEITHER THIS SHEET NOR THE INFORMATION IT CONTAINS MAY BE USED BY OR DISCLOSED TO ANY THIRD PARTY WITHOUT PRIOR WRITTEN CONSENT OF COMPAL ELECTRONICS, INC.				Size: Custom; Document Number: 401898; Rev: B
				Date: Friday, June 04, 2010; Sheet 13 of 36

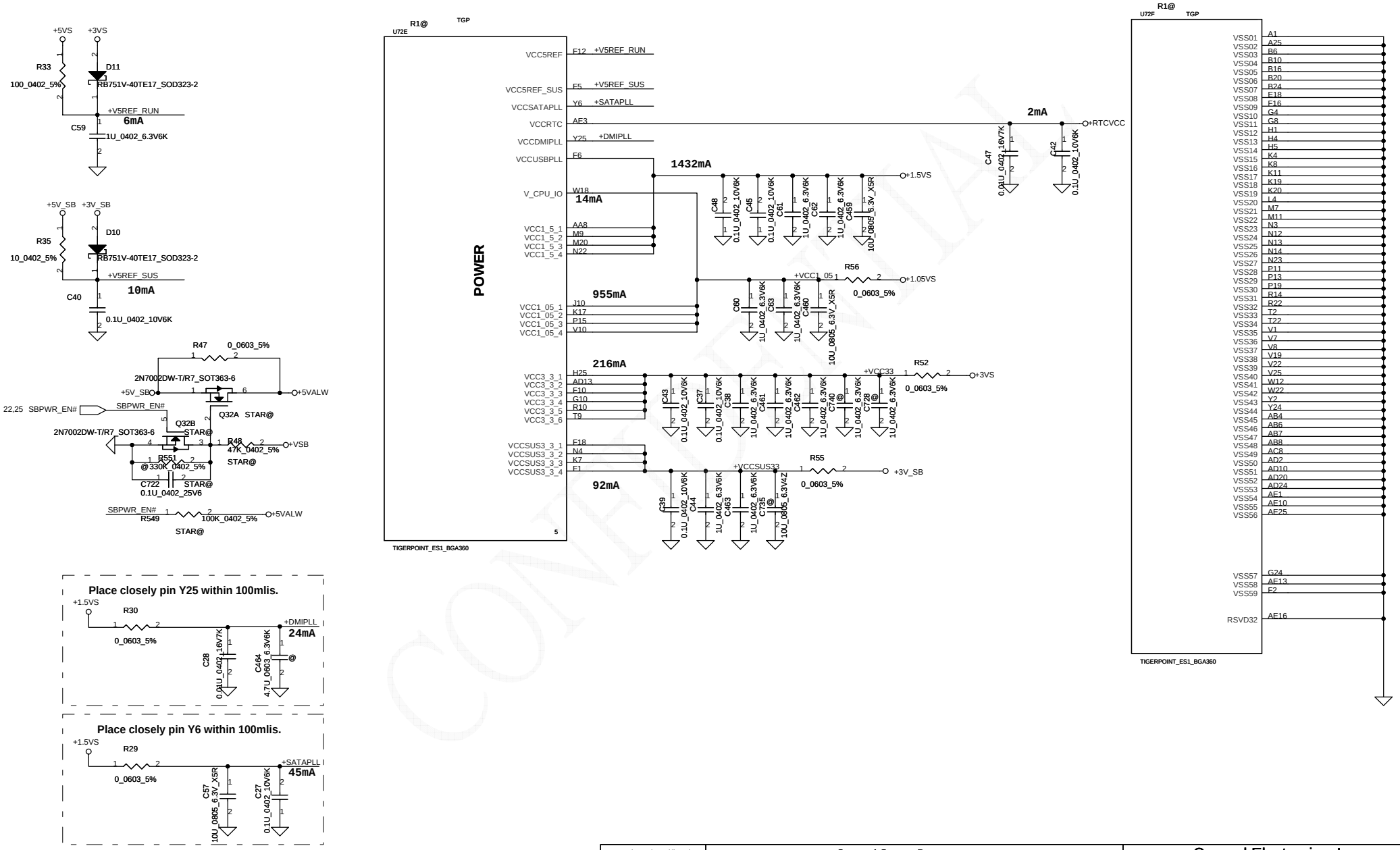

Security Classification	Compal Secret Data		
Issued Date	2010/02/02	Deciphered Date	2011/02/02

THIS SHEET OF ENGINEERING DRAWING IS THE PROPRIETARY PROPERTY OF COMPAL ELECTRONICS, INC. AND CONTAINS CONFIDENTIAL AND TRADE SECRET INFORMATION. THIS SHEET MAY NOT BE TRANSFERED FROM THE CUSTODY OF THE COMPETENT DIVISION OF R&D DEPARTMENT EXCEPT AS AUTHORIZED BY COMPAL ELECTRONICS, INC. NEITHER THIS SHEET NOR THE INFORMATION IT CONTAINS MAY BE USED BY OR DISCLOSED TO ANY THIRD PARTY WITHOUT PRIOR WRITTEN CONSENT OF COMPAL ELECTRONICS, INC.

Compal Electronics, Inc.

Title: SCHEMATIC MB A5662

Size: Custom | Document Number: 401898 | Rev: B

Date: Friday, June 04, 2010 | Sheet 14 of 36

Mini-Express Card for WLAN

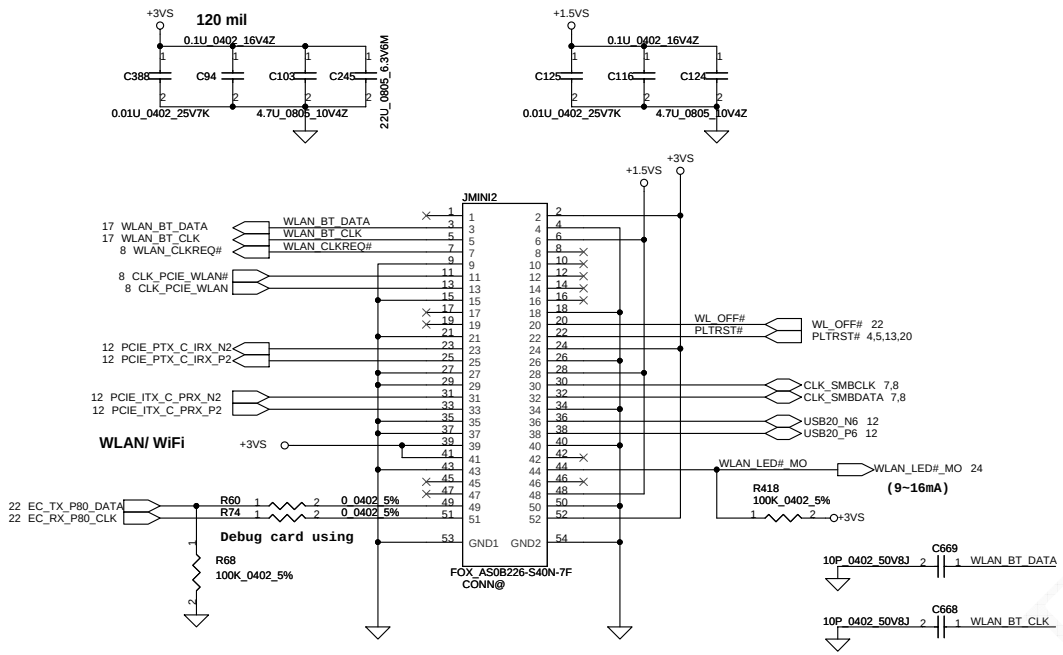

Mini-Express Card for 3G

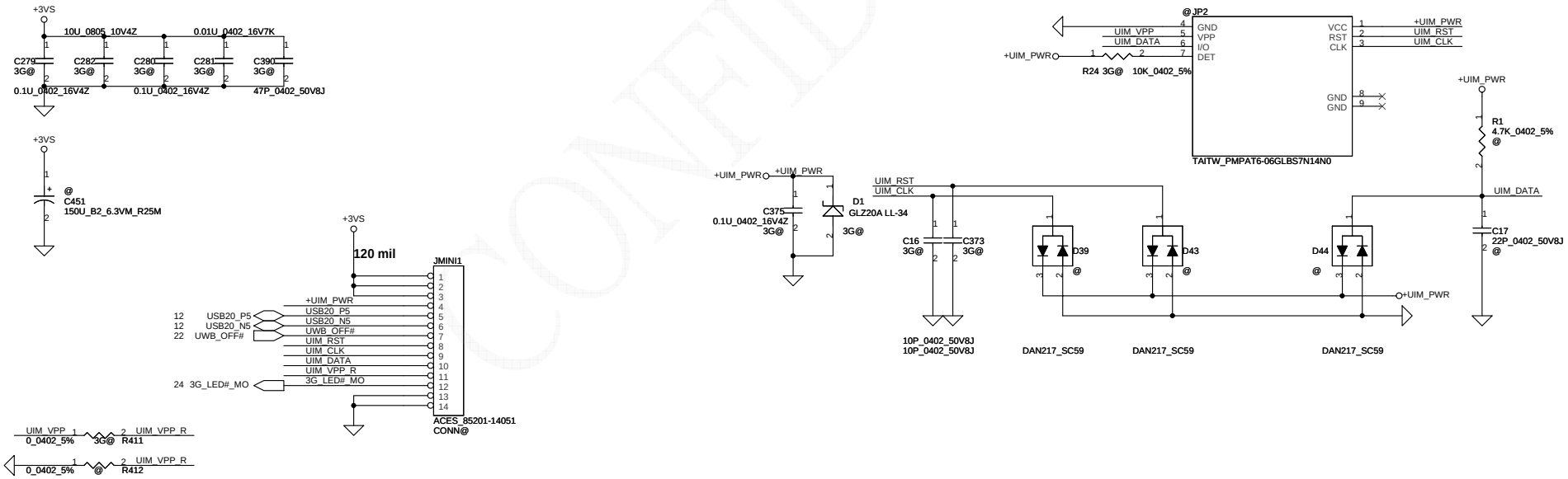

Security Classification	Compal Secret Data			Compal Electronics, Inc.
Issued Date	2010/02/02	Deciphered Date	2011/02/02	Title: SCHEMATIC MB A5662
THIS SHEET OF ENGINEERING DRAWING IS THE PROPRIETARY PROPERTY OF COMPAL ELECTRONICS, INC. AND CONTAINS CONFIDENTIAL AND TRADE SECRET INFORMATION. THIS SHEET MAY NOT BE TRANSFERED FROM THE CUSTODY OF THE COMPETENT DIVISION OF R&D DEPARTMENT EXCEPT AS AUTHORIZED BY COMPAL ELECTRONICS, INC. NEITHER THIS SHEET NOR THE INFORMATION IT CONTAINS MAY BE USED BY OR DISCLOSED TO ANY THIRD PARTY WITHOUT PRIOR WRITTEN CONSENT OF COMPAL ELECTRONICS, INC.				Size: Document Number: 401898 Rev: B
				Date: Friday, June 04, 2010 Sheet 15 of 36

CONFIDENTIAL

USB X2

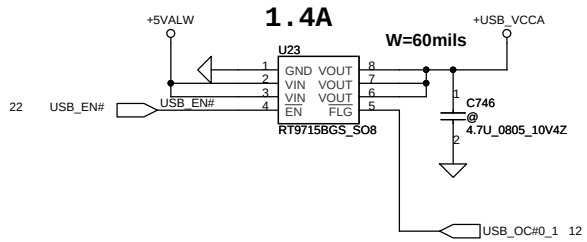

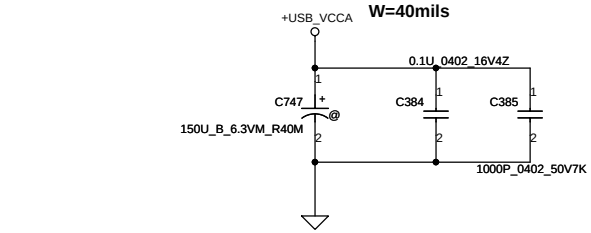

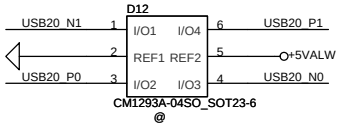

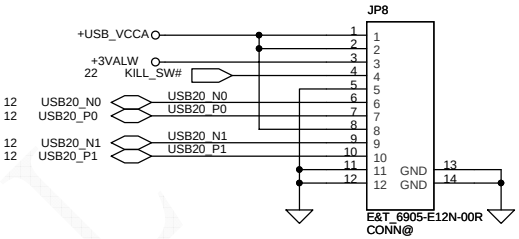

USB Board--Left

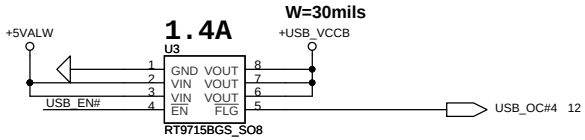

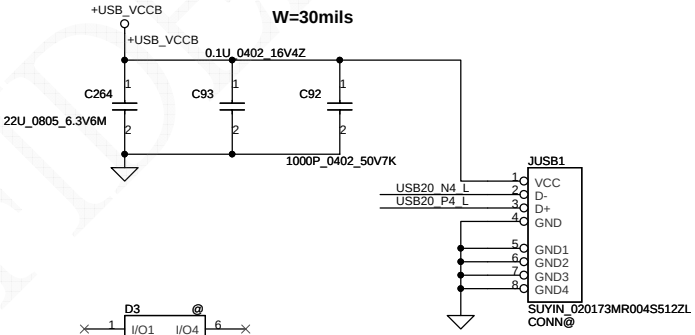

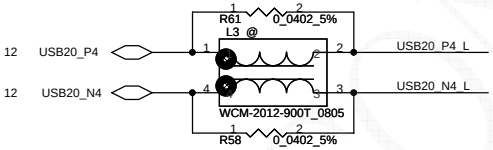

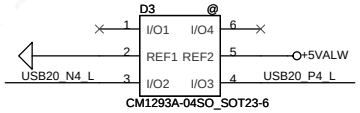

Security Classification	Compal Secret Data			Compal Electronics, Inc.
Issued Date	2010/02/02	Deciphered Date	2011/02/02	Title: SCHEMATIC MB A5662
				Size / Document Number: 401898 — Rev B
				Date: Friday, June 04, 2010 — Sheet 16 of 36

THIS SHEET OF ENGINEERING DRAWING IS THE PROPRIETARY PROPERTY OF COMPAL ELECTRONICS, INC. AND CONTAINS CONFIDENTIAL AND TRADE SECRET INFORMATION. THIS SHEET MAY NOT BE TRANSFERED FROM THE CUSTODY OF THE COMPETENT DIVISION OF R&D DEPARTMENT EXCEPT AS AUTHORIZED BY COMPAL ELECTRONICS, INC. NEITHER THIS SHEET NOR THE INFORMATION IT CONTAINS MAY BE USED BY OR DISCLOSED TO ANY THIRD PARTY WITHOUT PRIOR WRITTEN CONSENT OF COMPAL ELECTRONICS, INC.

SATA Conn.

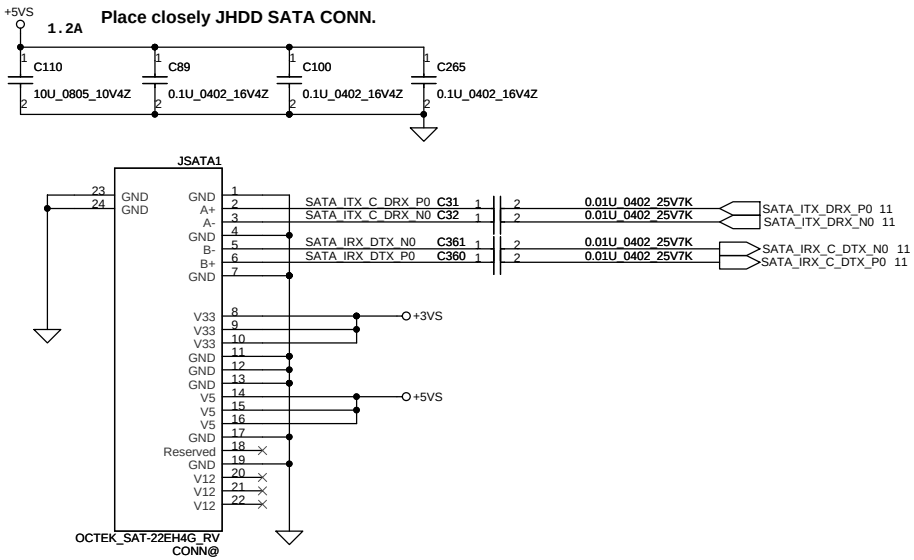

BlueTooth Interface

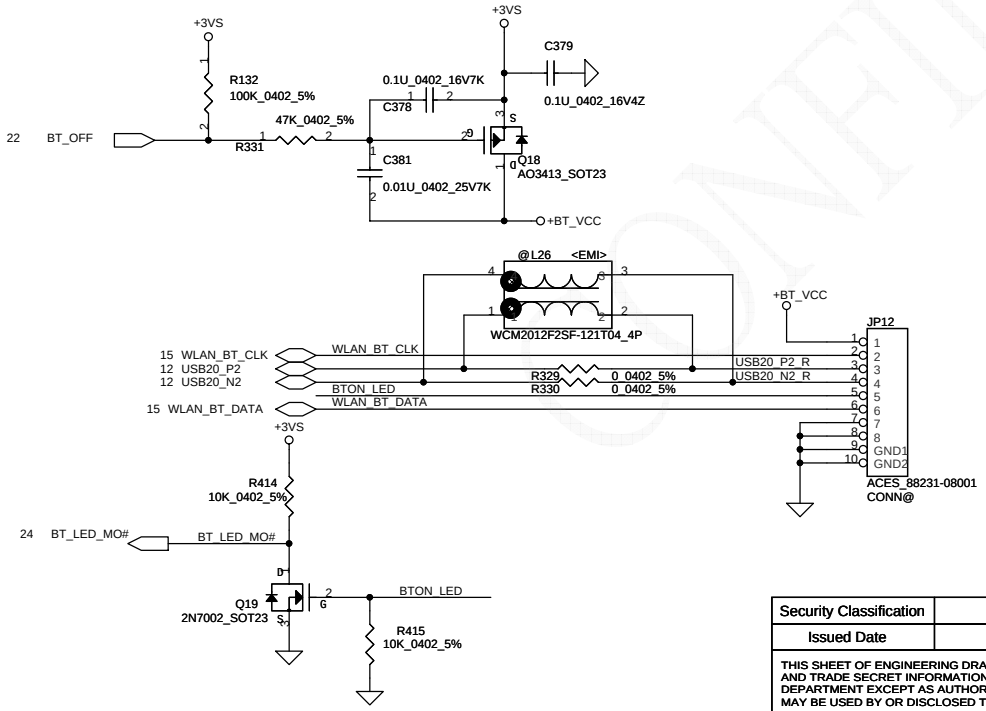

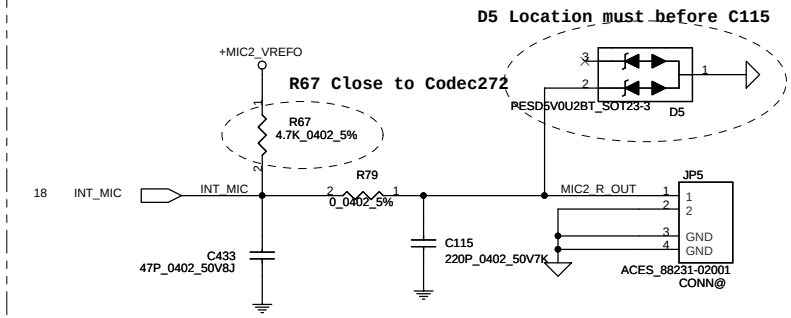

Security Classification	Compal Secret Data		
Issued Date	2010/02/02	Deciphered Date	2011/02/02

THIS SHEET OF ENGINEERING DRAWING IS THE PROPRIETARY PROPERTY OF COMPAL ELECTRONICS, INC. AND CONTAINS CONFIDENTIAL AND TRADE SECRET INFORMATION. THIS SHEET MAY NOT BE TRANSFERED FROM THE CUSTODY OF THE COMPETENT DIVISION OF R&D DEPARTMENT EXCEPT AS AUTHORIZED BY COMPAL ELECTRONICS, INC. NEITHER THIS SHEET NOR THE INFORMATION IT CONTAINS MAY BE USED BY OR DISCLOSED TO ANY THIRD PARTY WITHOUT PRIOR WRITTEN CONSENT OF COMPAL ELECTRONICS, INC.

Compal Electronics, Inc.

Title: SCHEMATIC MB A5662

Size: Custom | Document Number: 401898 | Rev: B

Date: Friday, June 04, 2010 | Sheet 17 of 36

HD Audio Codec

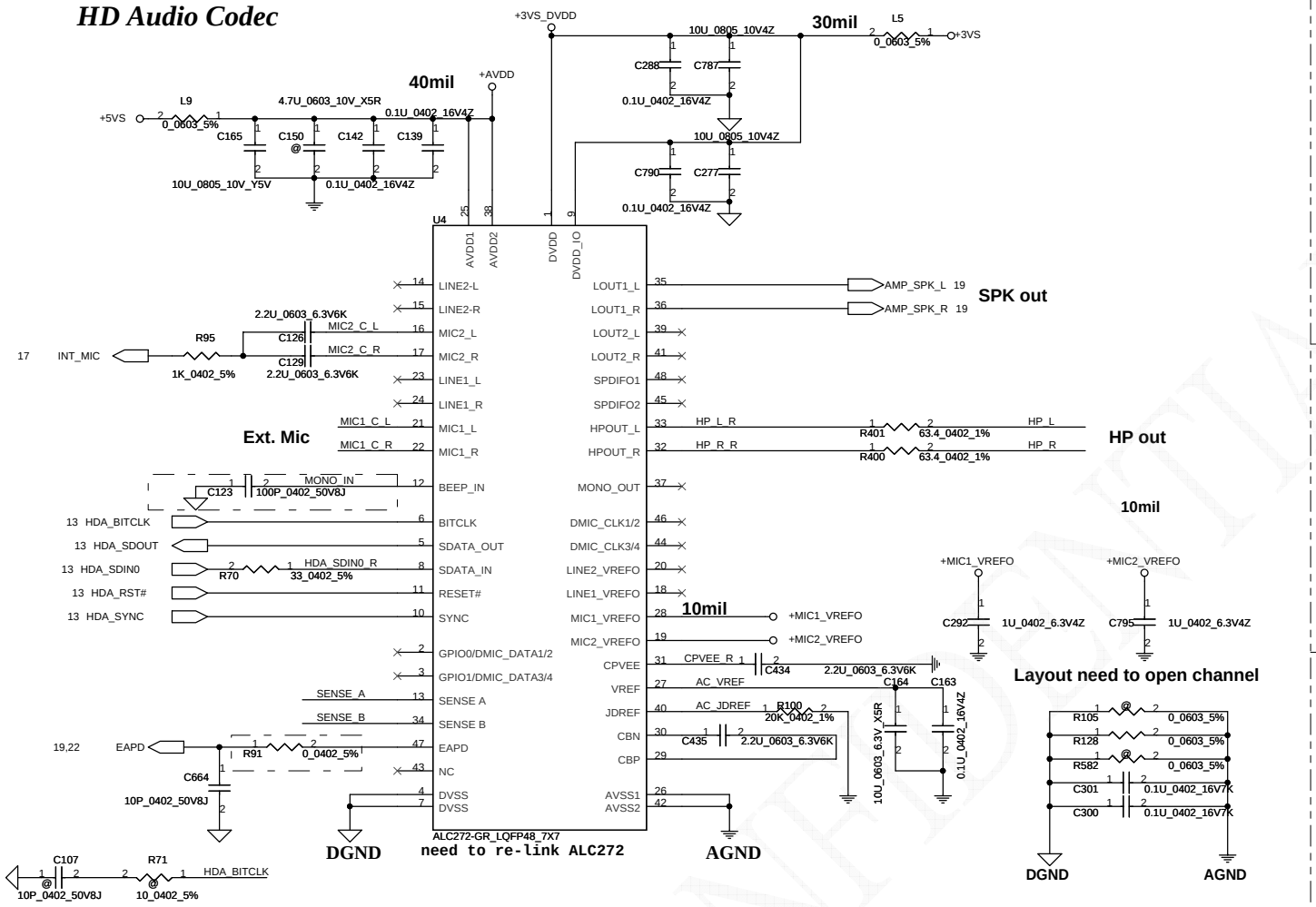

Beep sound

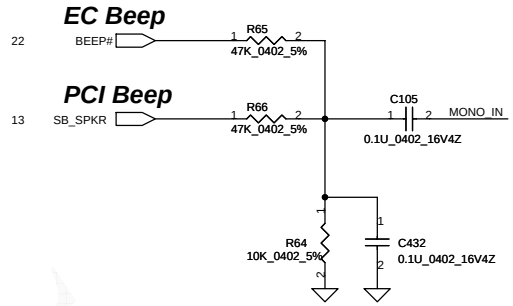

Head Phone JACK

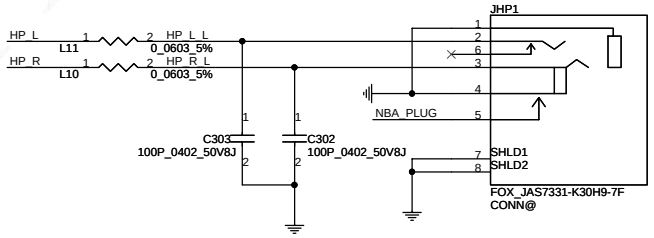

Ext. Mic

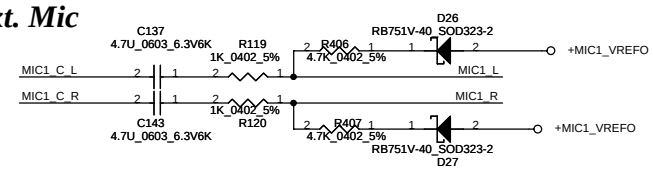

Ex.MIC JACK

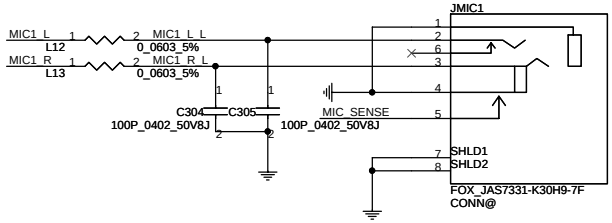

Sense Pin	Impedance	Codec Signals	Function
SENSE A	39.2K	PORT-A (PIN 39, 41)	
	20K	PORT-B (PIN 21, 22)	Ext. MIC
	10K	PORT-C (PIN 23, 24)	
	5.1K	PORT-D (PIN 35, 36)	SPK out
SENSE B	39.2K	PORT-E (PIN 14, 15)	
	20K	PORT-F (PIN 16, 17)	Int. MIC
	10K	PORT-H (PIN 37)	
	5.1K	PORT-I (PIN 32, 33)	Headphone out

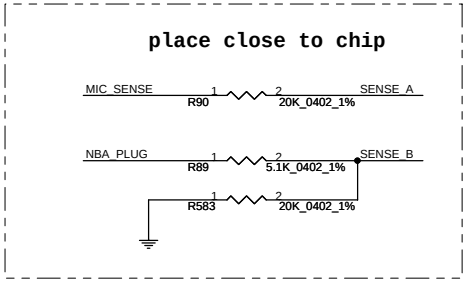

Security Classification	Compal Secret Data		
Issued Date	2010/02/02	Deciphered Date	2011/02/02

THIS SHEET OF ENGINEERING DRAWING IS THE PROPRIETARY PROPERTY OF COMPAL ELECTRONICS, INC. AND CONTAINS CONFIDENTIAL AND TRADE SECRET INFORMATION. THIS SHEET MAY NOT BE TRANSFERED FROM THE CUSTODY OF THE COMPETENT DIVISION OF R&D DEPARTMENT EXCEPT AS AUTHORIZED BY COMPAL ELECTRONICS, INC. NEITHER THIS SHEET NOR THE INFORMATION IT CONTAINS MAY BE USED BY OR DISCLOSED TO ANY THIRD PARTY WITHOUT PRIOR WRITTEN CONSENT OF COMPAL ELECTRONICS, INC.

Compal Electronics, Inc.

Title: SCHEMATIC MB A5662

Size	Document Number	Rev
Custom	401898	B

Date: Friday, June 04, 2010 | Sheet 18 of 36

TPA6017 Medium Range Amplifier

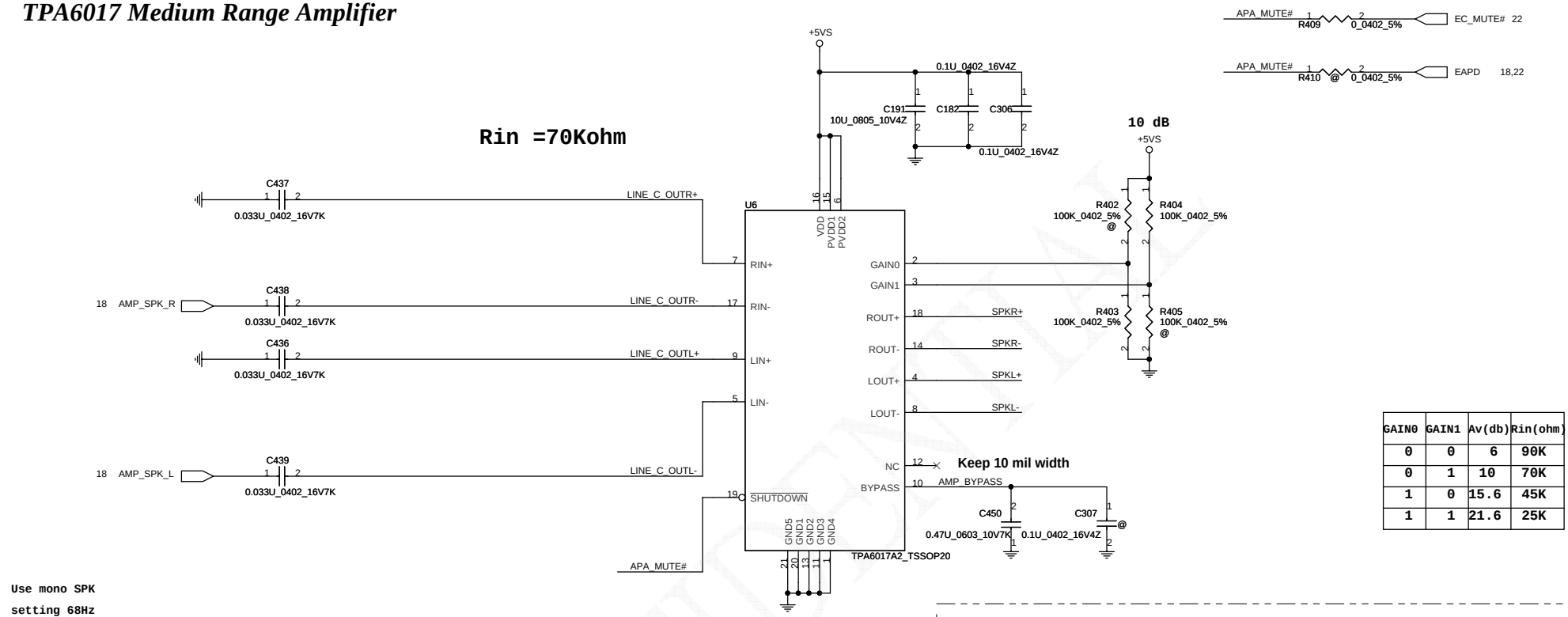

GAIN0	GAIN1	Av(db)	Rin(ohm)
0	0	6	90K
0	1	10	70K
1	0	15.6	45K
1	1	21.6	25K

Use mono SPK

setting 68Hz

F=1/2πRC --> -3db

C=0.033U,R=70K,F=68Hz

Left Speaker Connector

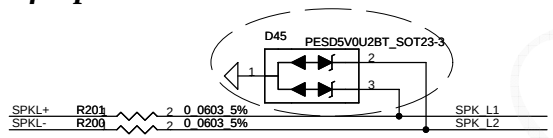

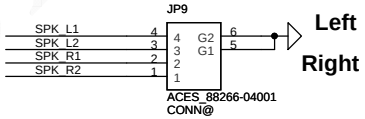

7/3 Change to SCA00000T00 for ESD request

Right Speaker Connector

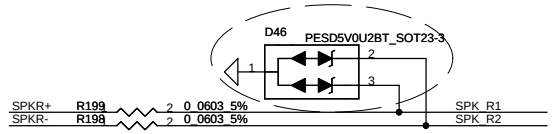

7/3 Change to SCA00000T00 for ESD request

Security Classification	Compal Secret Data		
Issued Date	2010/02/02	Deciphered Date	2011/02/02

THIS SHEET OF ENGINEERING DRAWING IS THE PROPRIETARY PROPERTY OF COMPAL ELECTRONICS, INC. AND CONTAINS CONFIDENTIAL AND TRADE SECRET INFORMATION. THIS SHEET MAY NOT BE TRANSFERED FROM THE CUSTODY OF THE COMPETENT DIVISION OF R&D DEPARTMENT EXCEPT AS AUTHORIZED BY COMPAL ELECTRONICS, INC. NEITHER THIS SHEET NOR THE INFORMATION IT CONTAINS MAY BE USED BY OR DISCLOSED TO ANY THIRD PARTY WITHOUT PRIOR WRITTEN CONSENT OF COMPAL ELECTRONICS, INC.

Compal Electronics, Inc.

Title: SCHEMATIC MB A5662

Size: Custom | Document Number: 401898 | Rev: B

Date: Friday, June 04, 2010 | Sheet 19 of 36

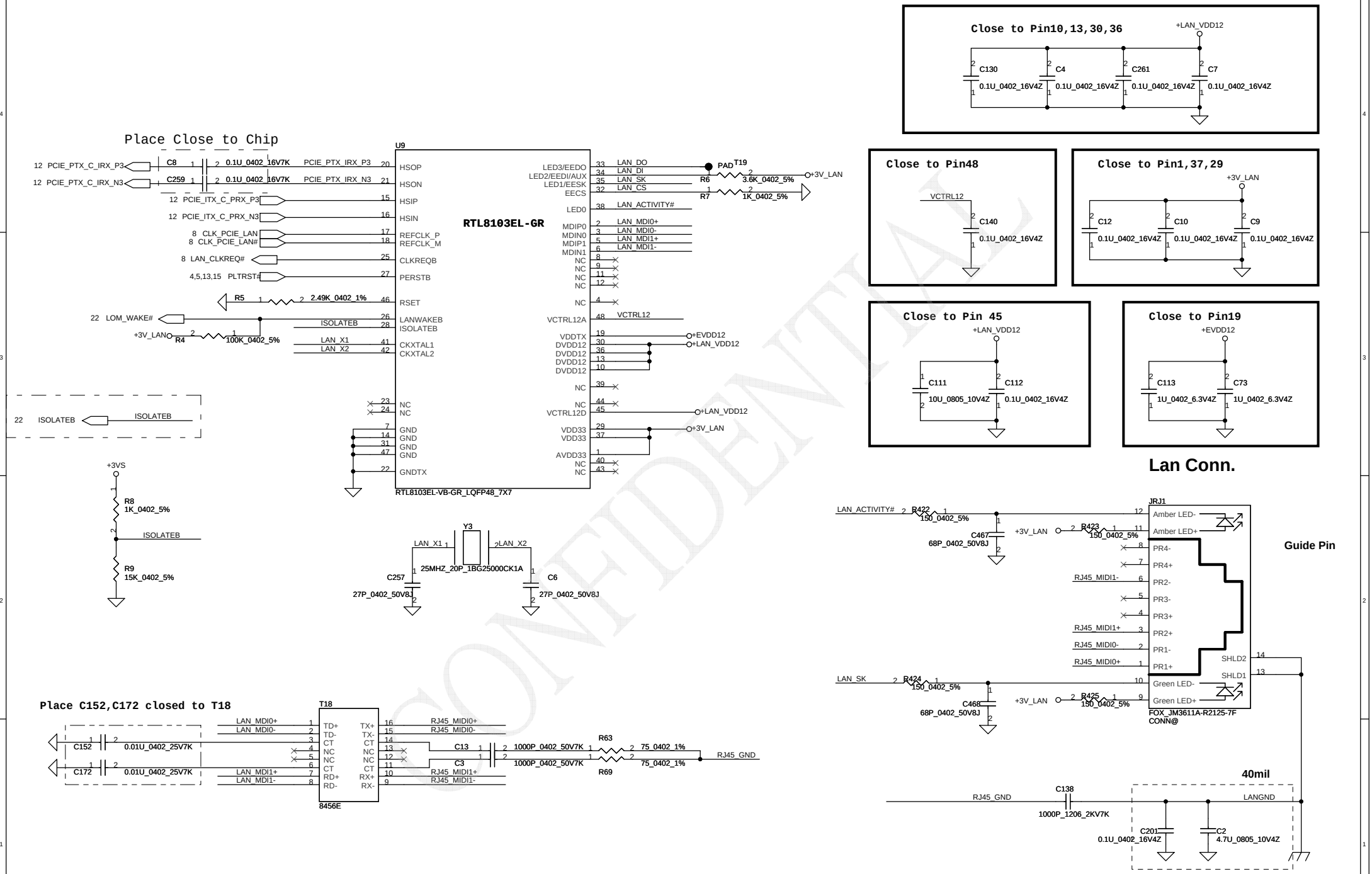

CONFIDENTIAL

Security Classification	Compal Secret Data		
Issued Date	2010/02/02	Deciphered Date	2011/02/02

THIS SHEET OF ENGINEERING DRAWING IS THE PROPRIETARY PROPERTY OF COMPAL ELECTRONICS, INC. AND CONTAINS CONFIDENTIAL AND TRADE SECRET INFORMATION. THIS SHEET MAY NOT BE TRANSFERED FROM THE CUSTODY OF THE COMPETENT DIVISION OF R&D DEPARTMENT EXCEPT AS AUTHORIZED BY COMPAL ELECTRONICS, INC. NEITHER THIS SHEET NOR THE INFORMATION IT CONTAINS MAY BE USED BY OR DISCLOSED TO ANY THIRD PARTY WITHOUT PRIOR WRITTEN CONSENT OF COMPAL ELECTRONICS, INC.

Compal Electronics, Inc.

Title: SCHEMATIC MB A5662

Size: Custom | Document Number: 401898 | Rev: B

Date: Friday, June 04, 2010 | Sheet 20 of 36

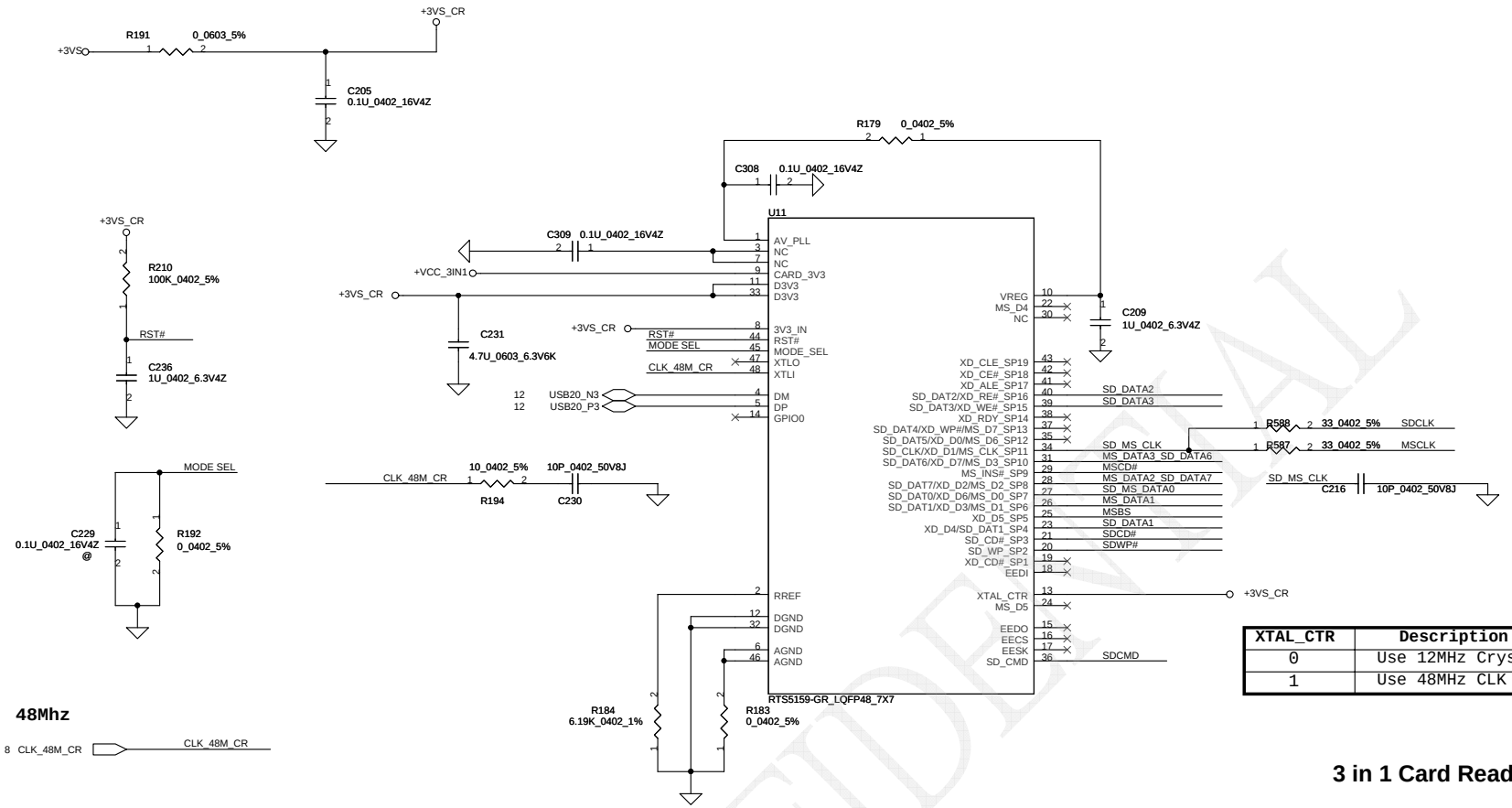

XTAL_CTR	Description
0	Use 12MHz Crystal
1	Use 48MHz CLK Gen

3 in 1 Card Reader

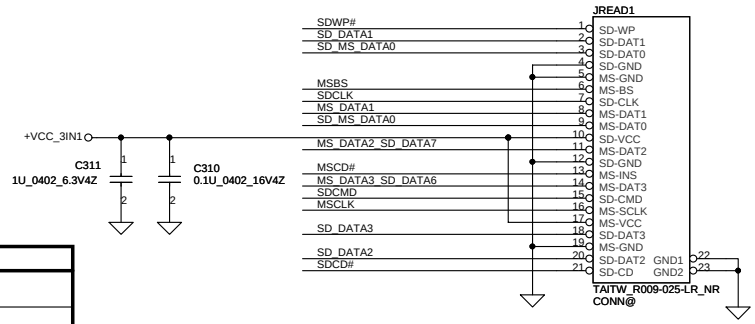

R	C	USB AUTO DE-LINK	MS FORMATTER	Description
0	NC	YES		Recommended
NC	47P	YES	YES	
NC	NC			Compatible with RTS5158E
NC	680P	YES		LED ON
10K	180P			LED ON
10K	680P		YES	

CONFIDENTIAL

Security Classification	Compal Secret Data		
Issued Date	2010/02/02	Deciphered Date	2011/02/02

THIS SHEET OF ENGINEERING DRAWING IS THE PROPRIETARY PROPERTY OF COMPAL ELECTRONICS, INC. AND CONTAINS CONFIDENTIAL AND TRADE SECRET INFORMATION. THIS SHEET MAY NOT BE TRANSFERED FROM THE CUSTODY OF THE COMPETENT DIVISION OF R&D DEPARTMENT EXCEPT AS AUTHORIZED BY COMPAL ELECTRONICS, INC. NEITHER THIS SHEET NOR THE INFORMATION IT CONTAINS MAY BE USED BY OR DISCLOSED TO ANY THIRD PARTY WITHOUT PRIOR WRITTEN CONSENT OF COMPAL ELECTRONICS, INC.

Compal Electronics, Inc.

Title: SCHEMATIC MB A5662

Size: Custom | Document Number: 401898 | Rev: B

Date: Friday, June 04, 2010 | Sheet 21 of 36

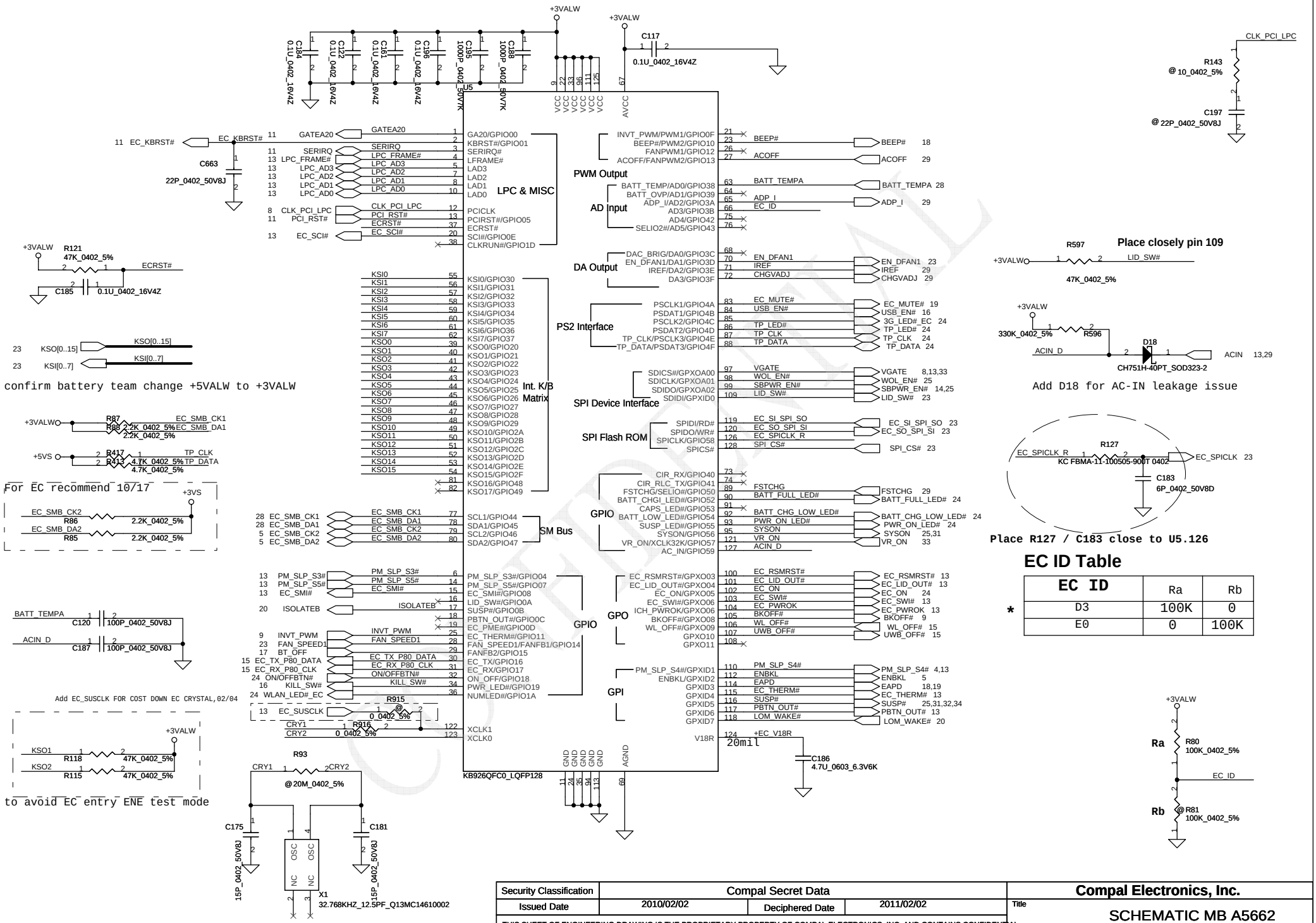

EC ID	Ra	Rb
* D3	100K	0
E0	0	100K

Security Classification	Compal Secret Data		
Issued Date	2010/02/02	Deciphered Date	2011/02/02

THIS SHEET OF ENGINEERING DRAWING IS THE PROPRIETARY PROPERTY OF COMPAL ELECTRONICS, INC. AND CONTAINS CONFIDENTIAL AND TRADE SECRET INFORMATION. THIS SHEET MAY NOT BE TRANSFERED FROM THE CUSTODY OF THE COMPETENT DIVISION OF R&D DEPARTMENT EXCEPT AS AUTHORIZED BY COMPAL ELECTRONICS, INC. NEITHER THIS SHEET NOR THE INFORMATION IT CONTAINS MAY BE USED BY OR DISCLOSED TO ANY THIRD PARTY WITHOUT PRIOR WRITTEN CONSENT OF COMPAL ELECTRONICS, INC.

Compal Electronics, Inc.

Title: SCHEMATIC MB A5662

Size: Custom | Document Number: 401898 | Rev: B

Date: Friday, June 04, 2010 | Sheet 22 of 36

FAN Control Circuit

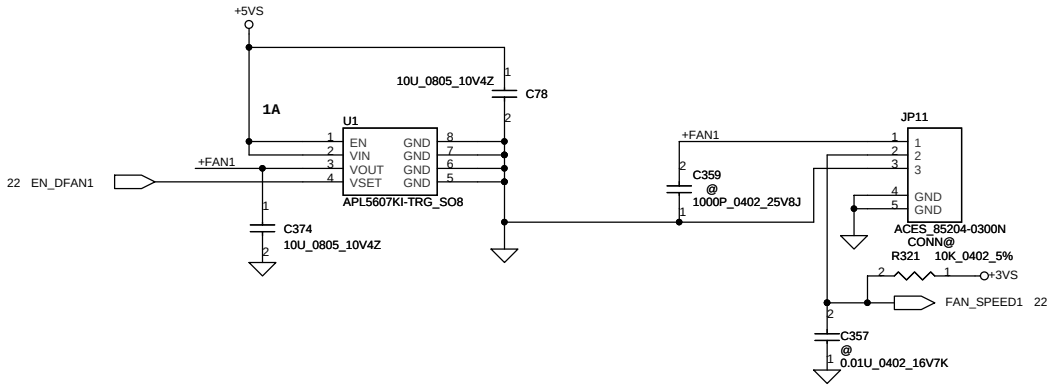

SPI Flash (16Mb*1)

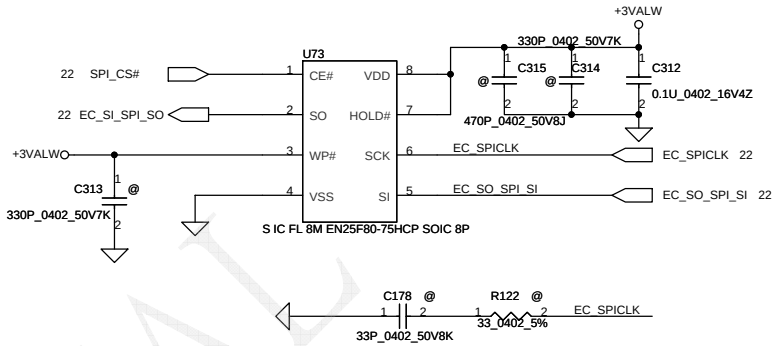

KEYBOARD CONN.

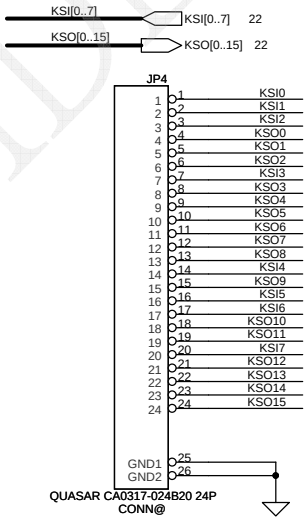

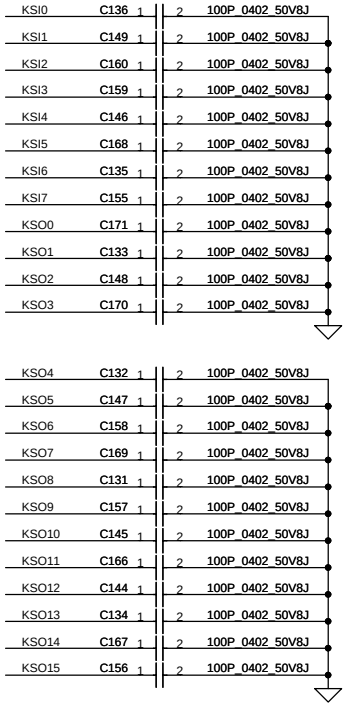

Lid SW

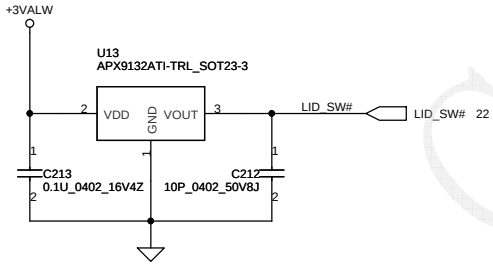

CONFIDENTIAL

Security Classification	Compal Secret Data			Compal Electronics, Inc.
Issued Date	2010/02/02	Deciphered Date	2011/02/02	Title: SCHEMATIC MB A5662
				Size / Document Number: 401898 / Rev: B
				Date: Friday, June 04, 2010 / Sheet 23 of 36

THIS SHEET OF ENGINEERING DRAWING IS THE PROPRIETARY PROPERTY OF COMPAL ELECTRONICS, INC. AND CONTAINS CONFIDENTIAL AND TRADE SECRET INFORMATION. THIS SHEET MAY NOT BE TRANSFERED FROM THE CUSTODY OF THE COMPETENT DIVISION OF R&D DEPARTMENT EXCEPT AS AUTHORIZED BY COMPAL ELECTRONICS, INC. NEITHER THIS SHEET NOR THE INFORMATION IT CONTAINS MAY BE USED BY OR DISCLOSED TO ANY THIRD PARTY WITHOUT PRIOR WRITTEN CONSENT OF COMPAL ELECTRONICS, INC.

Power Button

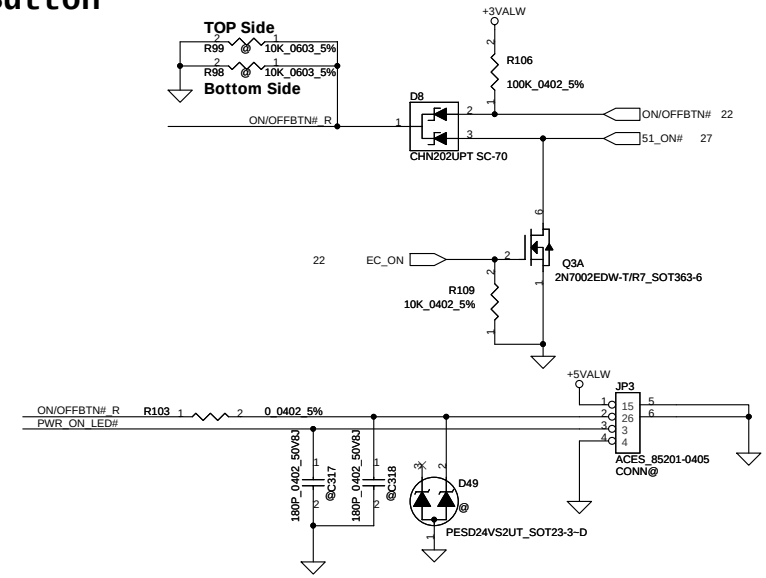

Touch/B Connector

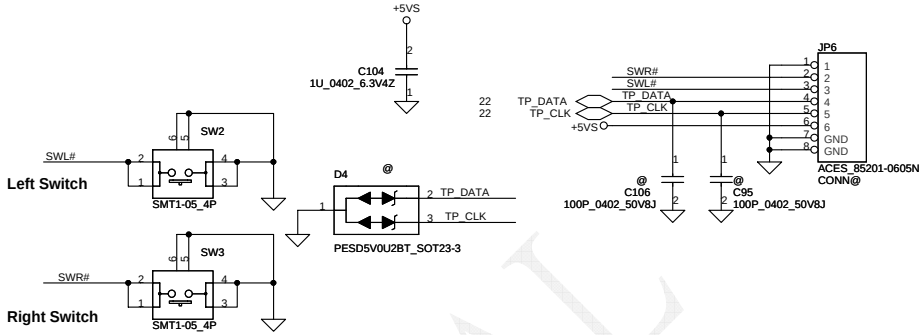

ISPD

PCB ZZZ1 PCB

DC-IN PJP1 45@DCIN

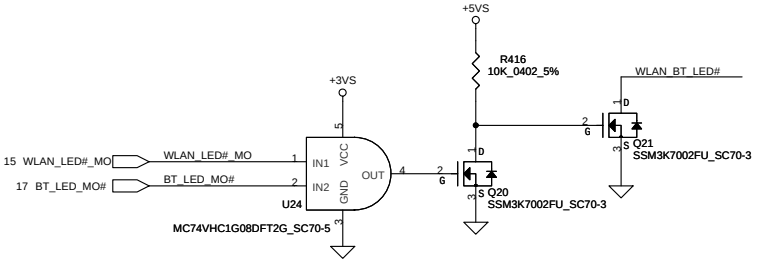

Option control LED

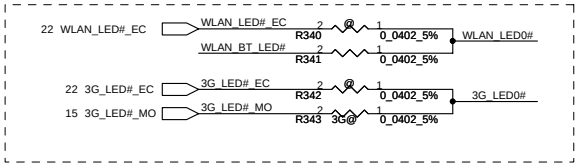

HDD_LED

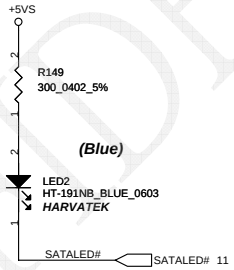

Power_LED

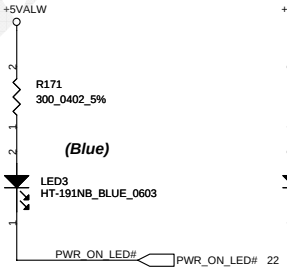

Charge_LED

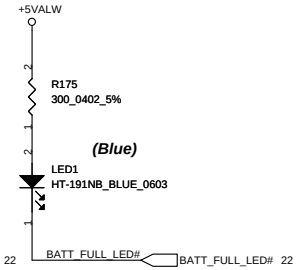

Charge_LED

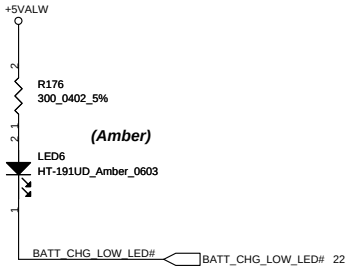

TP_LED

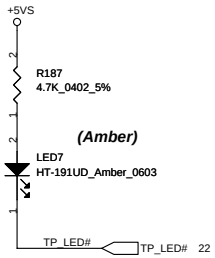

WLAN_LED

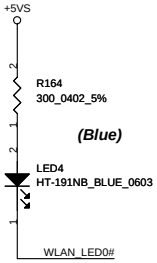

3G_LED

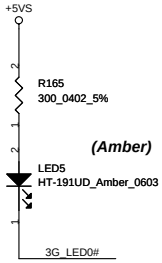

CONFIDENTIAL

Security Classification	Compal Secret Data		
Issued Date	2010/02/02	Deciphered Date	2011/02/02

THIS SHEET OF ENGINEERING DRAWING IS THE PROPRIETARY PROPERTY OF COMPAL ELECTRONICS, INC. AND CONTAINS CONFIDENTIAL AND TRADE SECRET INFORMATION. THIS SHEET MAY NOT BE TRANSFERED FROM THE CUSTODY OF THE COMPETENT DIVISION OF R&D DEPARTMENT EXCEPT AS AUTHORIZED BY COMPAL ELECTRONICS, INC. NEITHER THIS SHEET NOR THE INFORMATION IT CONTAINS MAY BE USED BY OR DISCLOSED TO ANY THIRD PARTY WITHOUT PRIOR WRITTEN CONSENT OF COMPAL ELECTRONICS, INC.

Compal Electronics, Inc.

Title: SCHEMATIC MB A5662

Size: Custom | Document Number: 401898 | Rev: B

Date: Friday, June 04, 2010 | Sheet 24 of 36

+3VALW TO +3VS

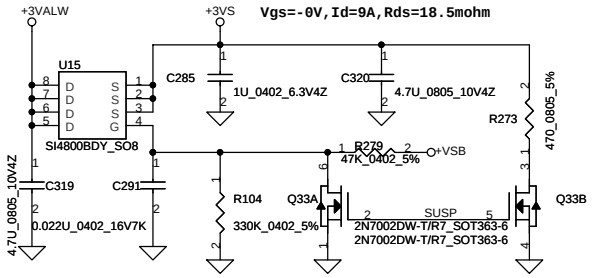

+5VALW TO +5VS

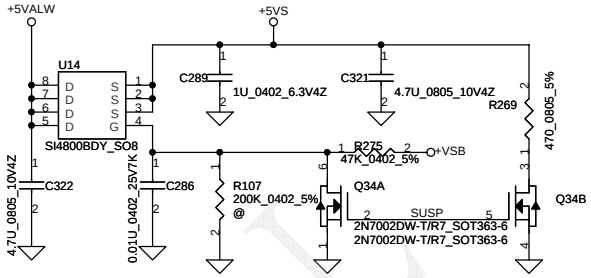

+3VALW TO +3V_LAN

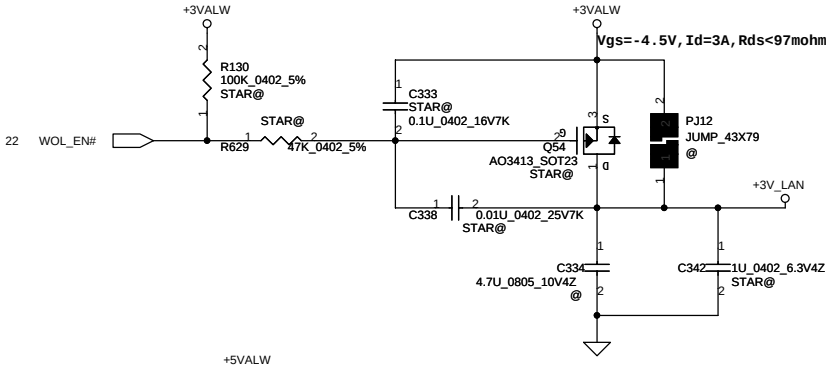

+3VALW TO +3V_SB

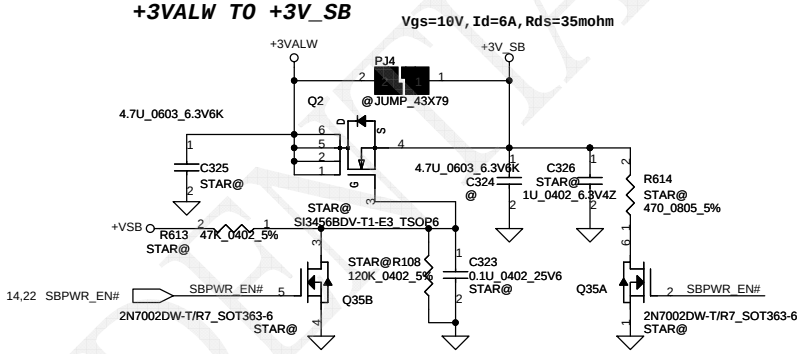

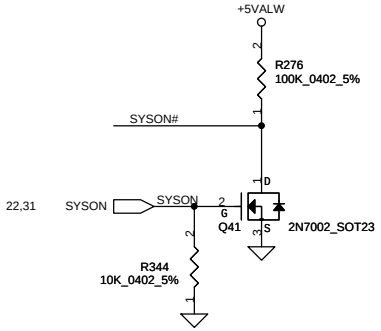

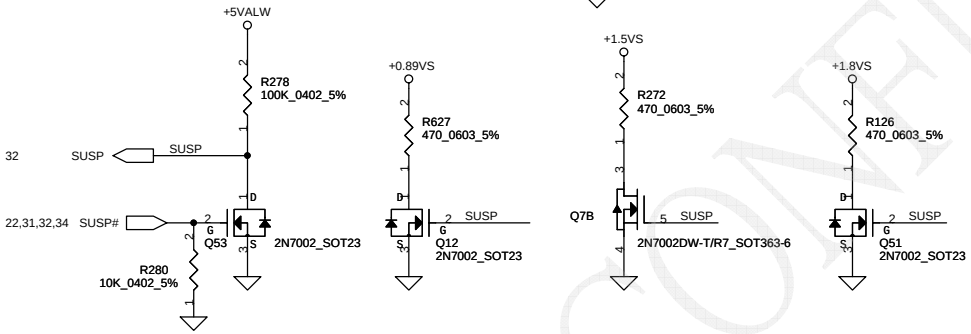

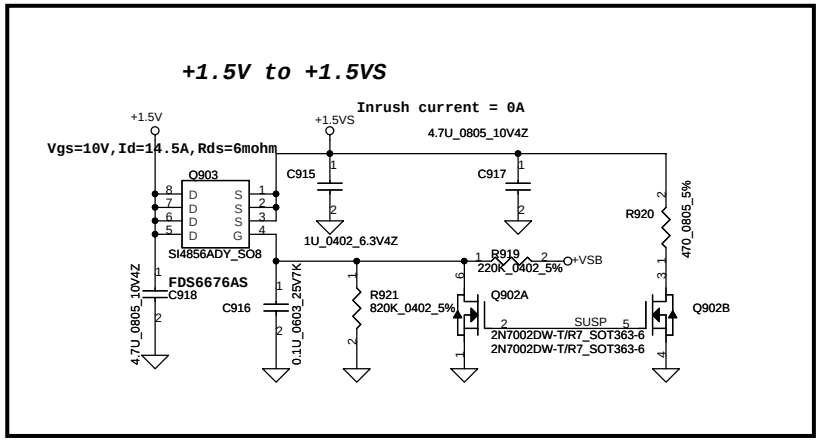

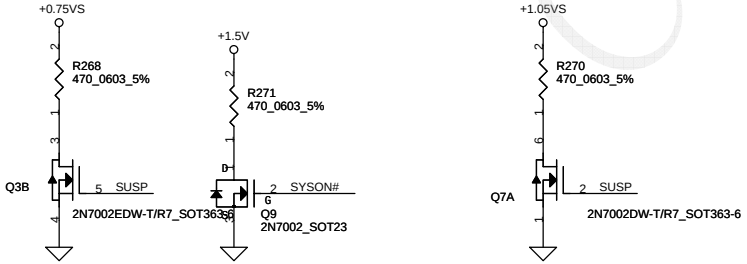

CONFIDENTIAL

Security Classification	Compal Secret Data			Compal Electronics, Inc.
Issued Date	2010/02/02	Deciphered Date	2011/02/02	Title: SCHEMATIC MB A5662
				Size: Custom; Document Number: 401898; Rev: B
				Date: Friday, June 04, 2010; Sheet 25 of 36

THIS SHEET OF ENGINEERING DRAWING IS THE PROPRIETARY PROPERTY OF COMPAL ELECTRONICS, INC. AND CONTAINS CONFIDENTIAL AND TRADE SECRET INFORMATION. THIS SHEET MAY NOT BE TRANSFERED FROM THE CUSTODY OF THE COMPETENT DIVISION OF R&D DEPARTMENT EXCEPT AS AUTHORIZED BY COMPAL ELECTRONICS, INC. NEITHER THIS SHEET NOR THE INFORMATION IT CONTAINS MAY BE USED BY OR DISCLOSED TO ANY THIRD PARTY WITHOUT PRIOR WRITTEN CONSENT OF COMPAL ELECTRONICS, INC.

H_6P6 H2

02/12 H2 change to H_6P6

H_2P5 H15 H11 H4 H9

H_3P3 H8 H6 H7 H5

01/06 H_3P8 change to H_3P3

H_3P3 H12 H13

01/06 H_3P1 change to H_3P3

H_7P0X5P0 H14

02/12 H_7P0X5P0N change to H_7P0X5P0

B+ B+

C331 0.1U_0402_25V6

C330 0.1U_0402_25V6

H_3P1X4P1N H16 H10

01/06 Add a H_3P1X4P1N

H_2P9N H3

01/06 H_2P9N change to H_2P7N

03/11 H_2P7N change to H_2P9N

FM1 FM2 FM4 FM3 FIDUCIAL_C40M80

CONFIDENTIAL

Security Classification	Compal Secret Data		
Issued Date	2010/02/02	Deciphered Date	2011/02/02

THIS SHEET OF ENGINEERING DRAWING IS THE PROPRIETARY PROPERTY OF COMPAL ELECTRONICS, INC. AND CONTAINS CONFIDENTIAL AND TRADE SECRET INFORMATION. THIS SHEET MAY NOT BE TRANSFERED FROM THE CUSTODY OF THE COMPETENT DIVISION OF R&D DEPARTMENT EXCEPT AS AUTHORIZED BY COMPAL ELECTRONICS, INC. NEITHER THIS SHEET NOR THE INFORMATION IT CONTAINS MAY BE USED BY OR DISCLOSED TO ANY THIRD PARTY WITHOUT PRIOR WRITTEN CONSENT OF COMPAL ELECTRONICS, INC.

Compal Electronics, Inc.

Title: SCHEMATIC MB A5662

Size: Custom | Document Number: 401898 | Rev: B

Date: Friday, June 04, 2010 | Sheet 26 of 36

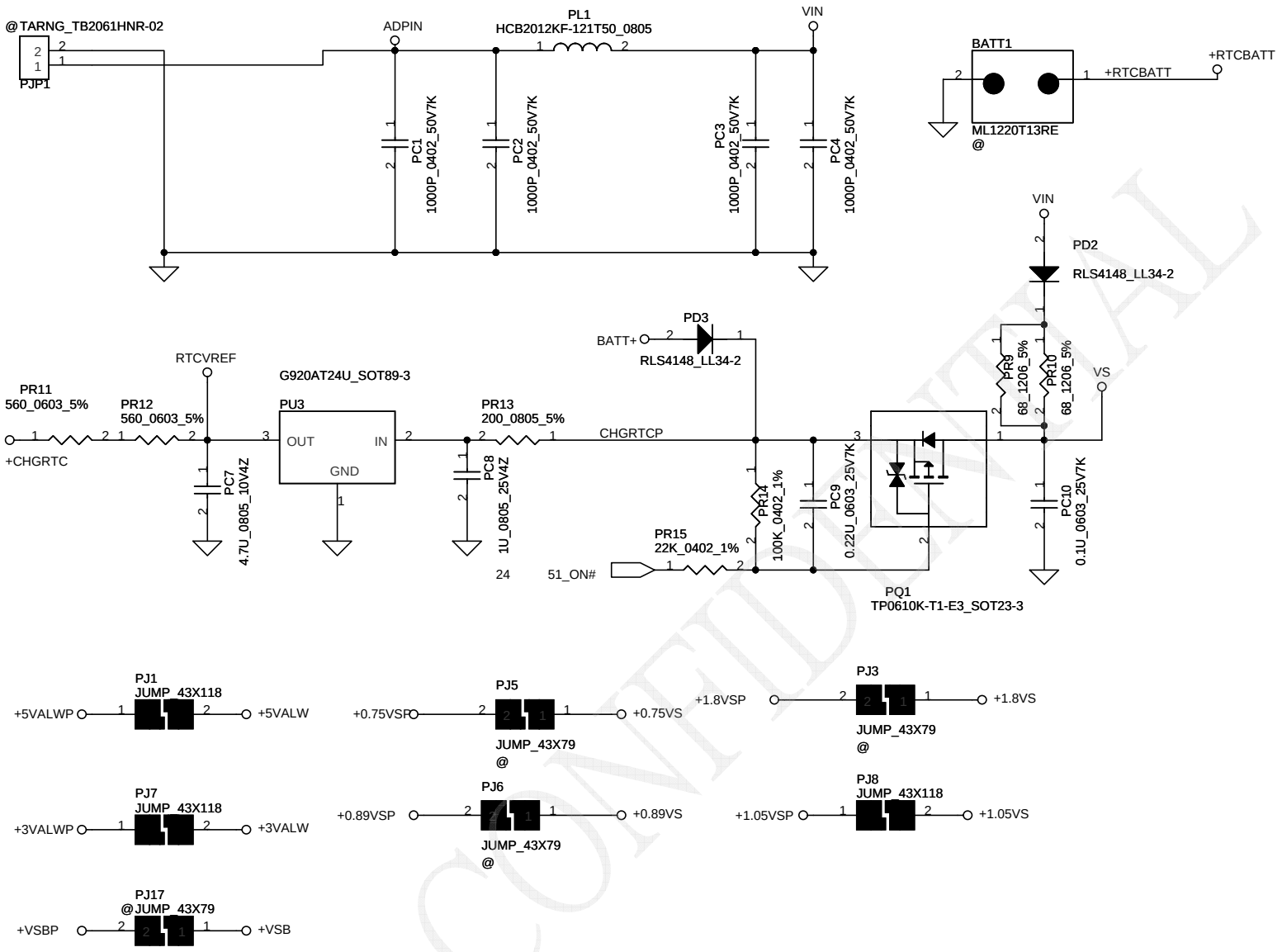

CONFIDENTIAL

Security Classification	Compal Secret Data		
Issued Date	2010/02/02	Deciphered Date	2011/02/02

THIS SHEET OF ENGINEERING DRAWING IS THE PROPRIETARY PROPERTY OF COMPAL ELECTRONICS, INC. AND CONTAINS CONFIDENTIAL AND TRADE SECRET INFORMATION. THIS SHEET MAY NOT BE TRANSFERED FROM THE CUSTODY OF THE COMPETENT DIVISION OF R&D DEPARTMENT EXCEPT AS AUTHORIZED BY COMPAL ELECTRONICS, INC. NEITHER THIS SHEET NOR THE INFORMATION IT CONTAINS MAY BE USED BY OR DISCLOSED TO ANY THIRD PARTY WITHOUT PRIOR WRITTEN CONSENT OF COMPAL ELECTRONICS, INC.

Compal Electronics, Inc.

Title: **SCHEMATIC MB A5662**

Size: Custom | Document Number: 401898 | Rev: B

Date: Friday, June 04, 2010 | Sheet 27 of 36

PH1 under CPU botten side :
CPU thermal protection at 95 degree C
Recovery at 75 degree C

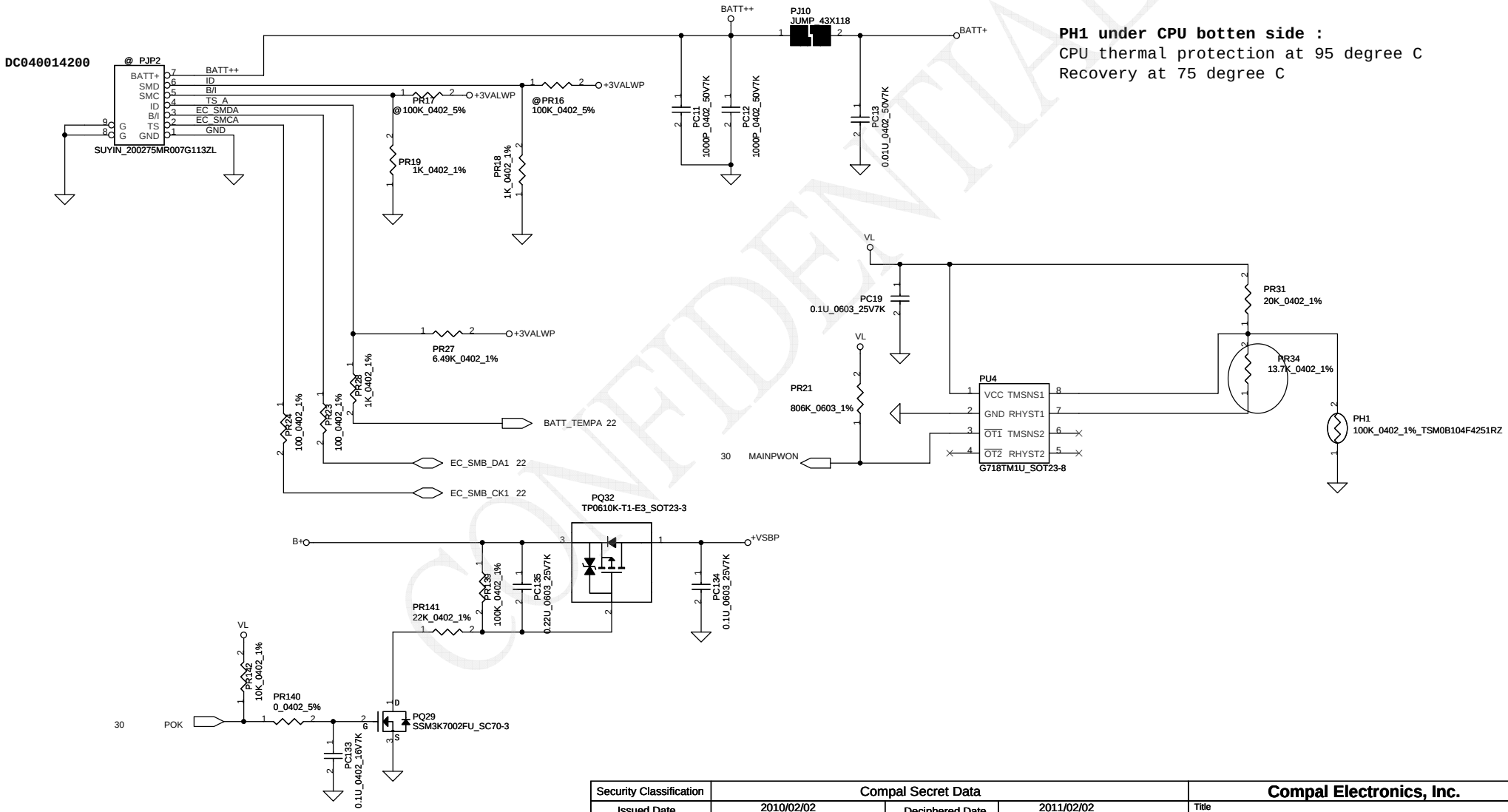

CONFIDENTIAL

Security Classification	Compal Secret Data			Compal Electronics, Inc.
Issued Date	2010/02/02	Deciphered Date	2011/02/02	Title: SCHEMATIC MB A5662
				Size: Custom; Document Number: 401898; Rev: B
				Date: Friday, June 04, 2010; Sheet 28 of 36

THIS SHEET OF ENGINEERING DRAWING IS THE PROPRIETARY PROPERTY OF COMPAL ELECTRONICS, INC. AND CONTAINS CONFIDENTIAL AND TRADE SECRET INFORMATION. THIS SHEET MAY NOT BE TRANSFERED FROM THE CUSTODY OF THE COMPETENT DIVISION OF R&D DEPARTMENT EXCEPT AS AUTHORIZED BY COMPAL ELECTRONICS, INC. NEITHER THIS SHEET NOR THE INFORMATION IT CONTAINS MAY BE USED BY OR DISCLOSED TO ANY THIRD PARTY WITHOUT PRIOR WRITTEN CONSENT OF COMPAL ELECTRONICS, INC.

30W, Iadapter=0~1.57A, Current sense=0.015ohm, CP=1.328A

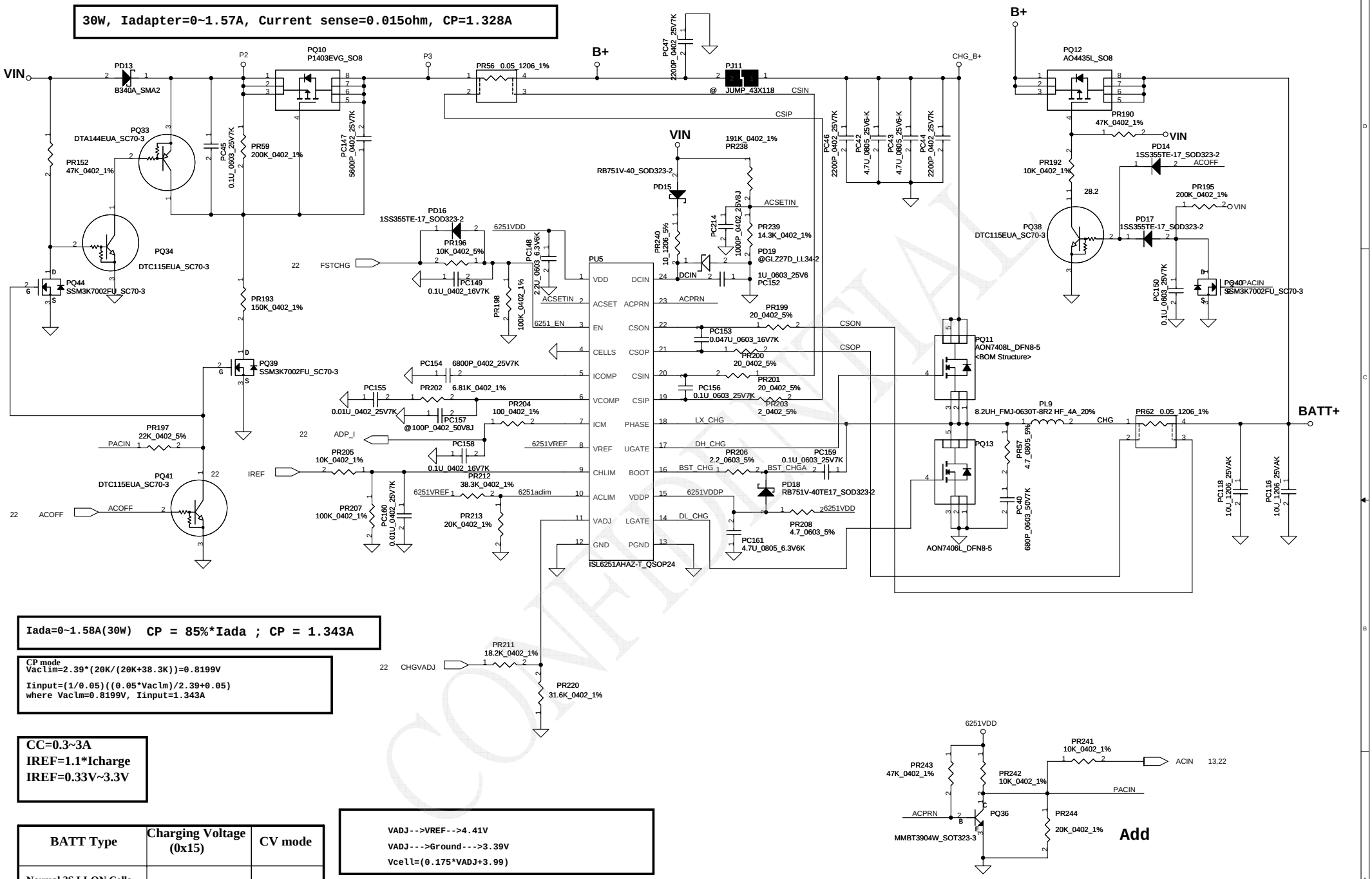

Iada=0~1.58A(30W) CP = 85%*Iada ; CP = 1.343A

CP mode
Vaclim=2.39*(20K/(20K+38.3K))=0.8199V

Iinput=(1/0.05)((0.05*Vaclm)/2.39+0.05)
where Vaclm=0.8199V, Iinput=1.343A

CC=0.3~3A
IREF=1.1*Icharge
IREF=0.33V~3.3V

BATT Type	Charging Voltage (0x15)	CV mode
Normal 3S LI-ON Cells	12600mV	12.60V

VADJ-->VREF-->4.41V
VADJ--->Ground--->3.39V
Vcell=(0.175*VADJ+3.99)

CONFIDENTIAL

Security Classification	Compal Secret Data		
Issued Date	2010/02/02	Deciphered Date	2011/02/02

THIS SHEET OF ENGINEERING DRAWING IS THE PROPRIETARY PROPERTY OF COMPAL ELECTRONICS, INC. AND CONTAINS CONFIDENTIAL AND TRADE SECRET INFORMATION. THIS SHEET MAY NOT BE TRANSFERED FROM THE CUSTODY OF THE COMPETENT DIVISION OF R&D DEPARTMENT EXCEPT AS AUTHORIZED BY COMPAL ELECTRONICS, INC. NEITHER THIS SHEET NOR THE INFORMATION IT CONTAINS MAY BE USED BY OR DISCLOSED TO ANY THIRD PARTY WITHOUT PRIOR WRITTEN CONSENT OF COMPAL ELECTRONICS, INC.

Compal Electronics, Inc.

Title: SCHEMATIC MB A5662

Size | Document Number: 401898 | Rev: B

Date: Friday, June 04, 2010 | Sheet 29 of 36

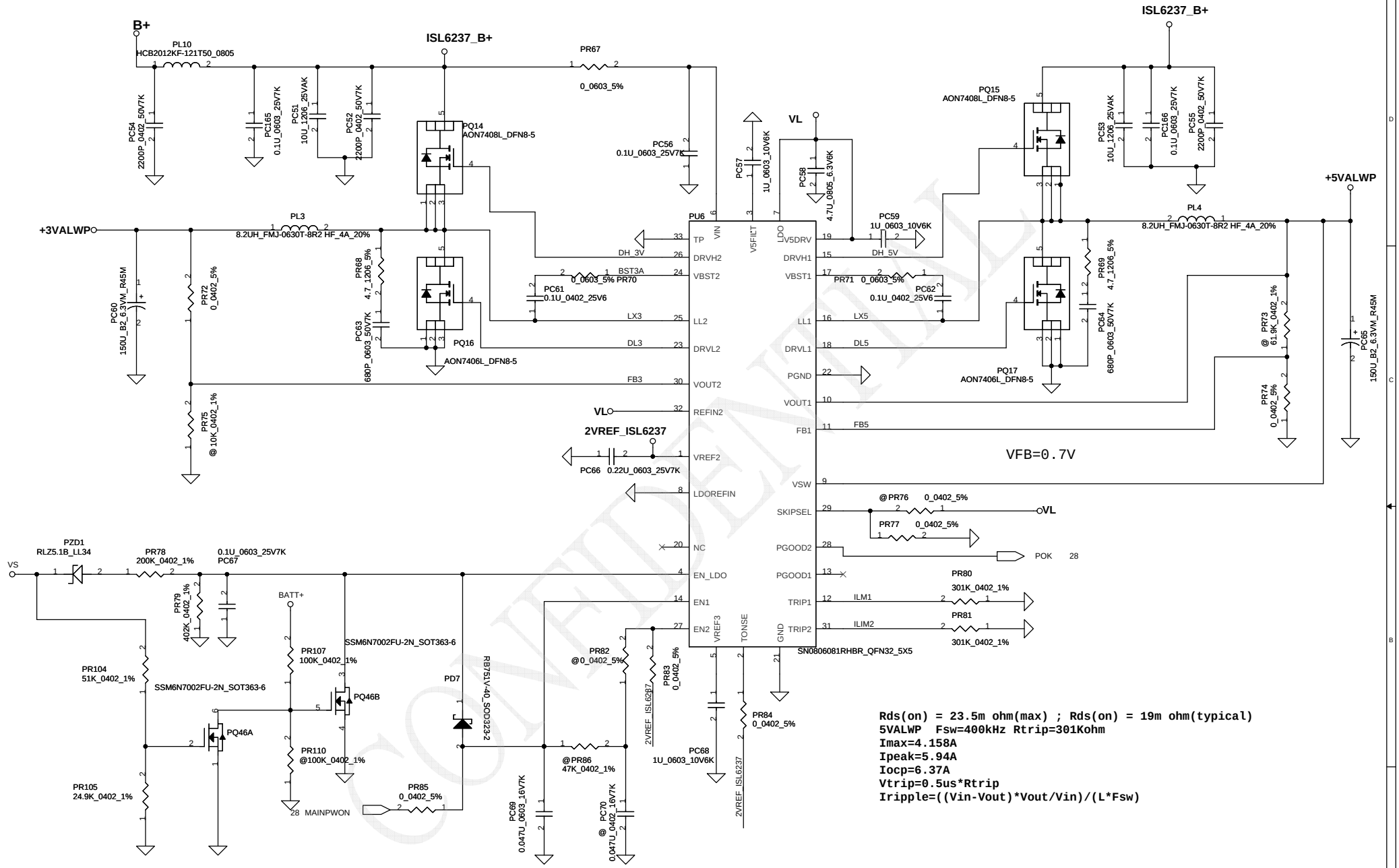

Rds(on) = 23.5m ohm(max) ; Rds(on) = 19m ohm(typical)
5VALWP Fsw=400kHz Rtrip=301Kohm
Imax=4.158A
Ipeak=5.94A
Iocp=6.37A
Vtrip=0.5us*Rtrip
Iripple=((Vin-Vout)*Vout/Vin)/(L*Fsw)

Rds(on) = 23.5m ohm(max) ; Rds(on) = 19m ohm(typical)
3.3VALWP Fsw=300kHz Rtrip=301K
Imax=4.319A
Ipeak=6.17A
Iocp=6.43A
Vtrip=0.5us*Rtrip
Iripple=((Vin-Vout)*Vout/Vin)/(L*Fsw)

Security Classification	Compal Secret Data		
Issued Date	2010/02/02	Deciphered Date	2011/02/02

THIS SHEET OF ENGINEERING DRAWING IS THE PROPRIETARY PROPERTY OF COMPAL ELECTRONICS, INC. AND CONTAINS CONFIDENTIAL AND TRADE SECRET INFORMATION. THIS SHEET MAY NOT BE TRANSFERED FROM THE CUSTODY OF THE COMPETENT DIVISION OF R&D DEPARTMENT EXCEPT AS AUTHORIZED BY COMPAL ELECTRONICS, INC. NEITHER THIS SHEET NOR THE INFORMATION IT CONTAINS MAY BE USED BY OR DISCLOSED TO ANY THIRD PARTY WITHOUT PRIOR WRITTEN CONSENT OF COMPAL ELECTRONICS, INC.

Compal Electronics, Inc.

Title: **SCHEMATIC MB A5662**

Size: Custom | Document Number: 401898 | Rev: B

Date: Friday, June 04, 2010 | Sheet 30 of 36

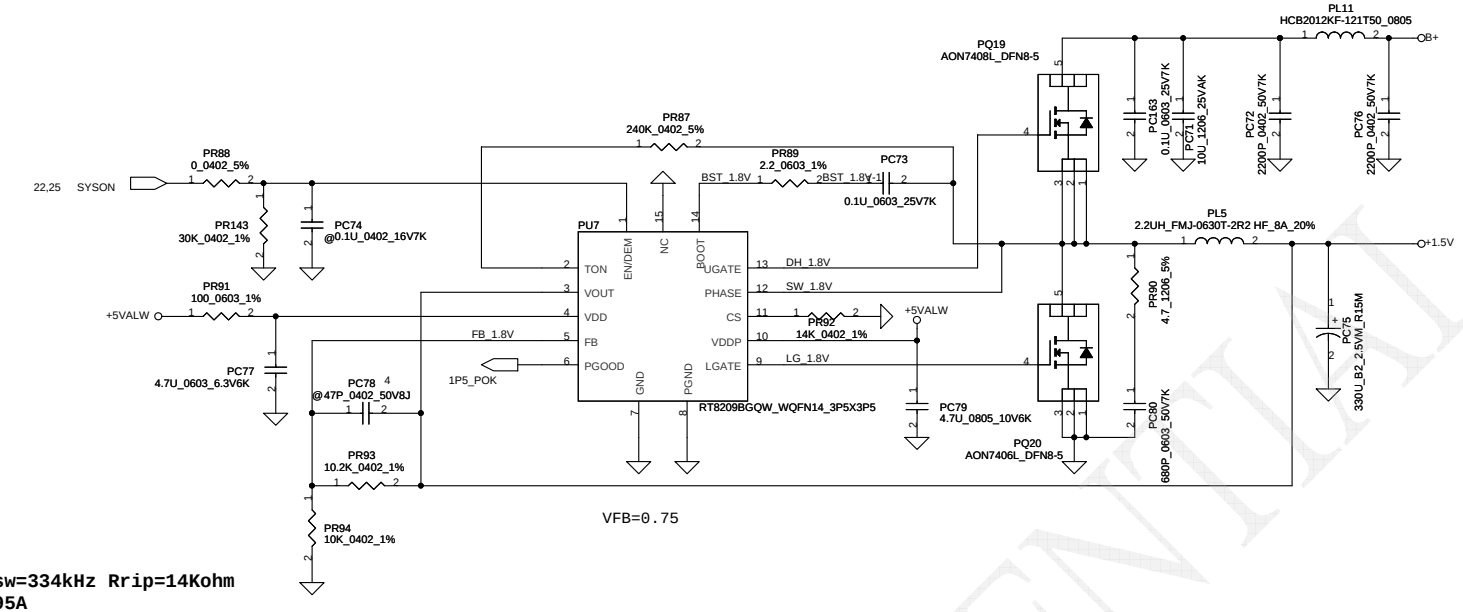

1.5VP Fsw=334kHz Rrip=14Kohm
Imax=4.795A
Ipeak=6.85A
Iocp=6A
Vtrip=10uA*Rtrip
Iripple=((Vin-Vout)*Vout/Vin)/(L*Fsw)

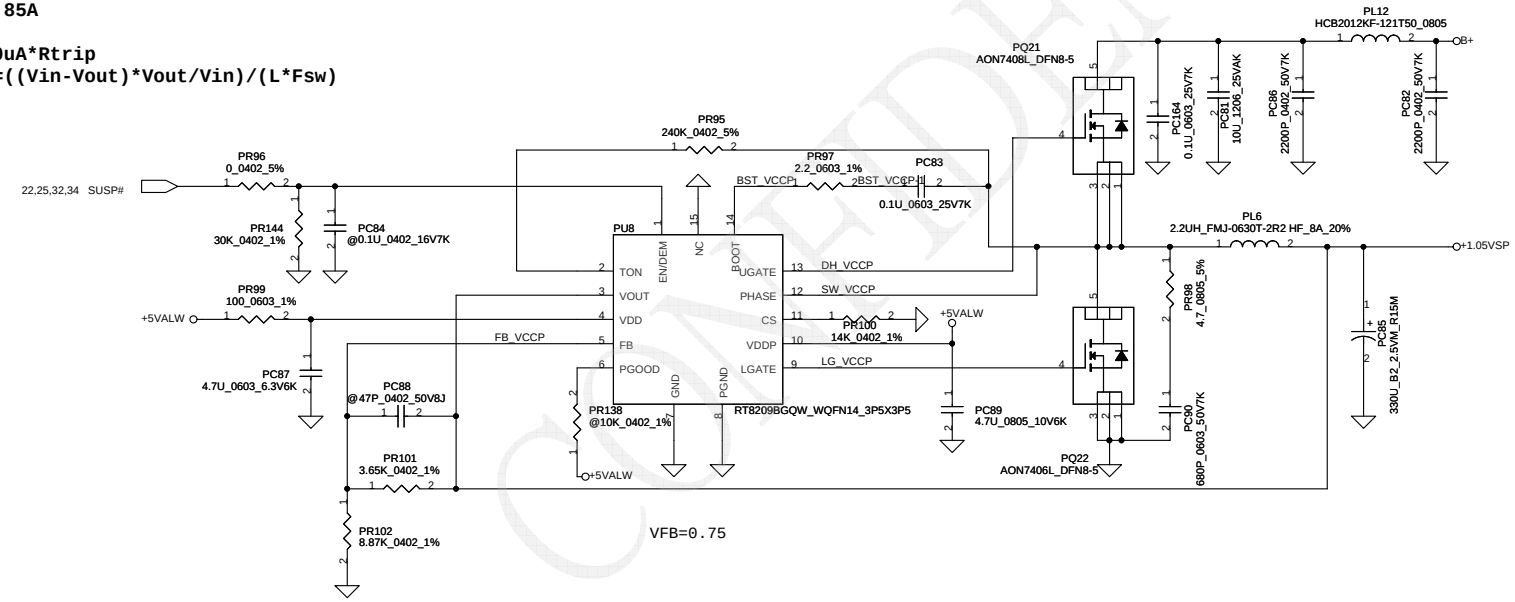

VCCPP(1.05V) Fsw=338kHz Rtrip=14Kohm
Imax=2.4493A
Ipeak=3.499A
Iocp=6.01A
Vtrip=10uA*Rtrip
Iripple=((Vin-Vout)*Vout/Vin)/(L*Fsw)

CONFIDENTIAL

Security Classification	Compal Secret Data			Compal Electronics, Inc.
Issued Date	2010/02/02	Deciphered Date	2011/02/02	Title: SCHEMATIC MB A5662

THIS SHEET OF ENGINEERING DRAWING IS THE PROPRIETARY PROPERTY OF COMPAL ELECTRONICS, INC. AND CONTAINS CONFIDENTIAL AND TRADE SECRET INFORMATION. THIS SHEET MAY NOT BE TRANSFERED FROM THE CUSTODY OF THE COMPETENT DIVISION OF R&D DEPARTMENT EXCEPT AS AUTHORIZED BY COMPAL ELECTRONICS, INC. NEITHER THIS SHEET NOR THE INFORMATION IT CONTAINS MAY BE USED BY OR DISCLOSED TO ANY THIRD PARTY WITHOUT PRIOR WRITTEN CONSENT OF COMPAL ELECTRONICS, INC.

Size	Document Number	Rev
Custom	401898	B

Date: Friday, June 04, 2010 Sheet 31 of 36

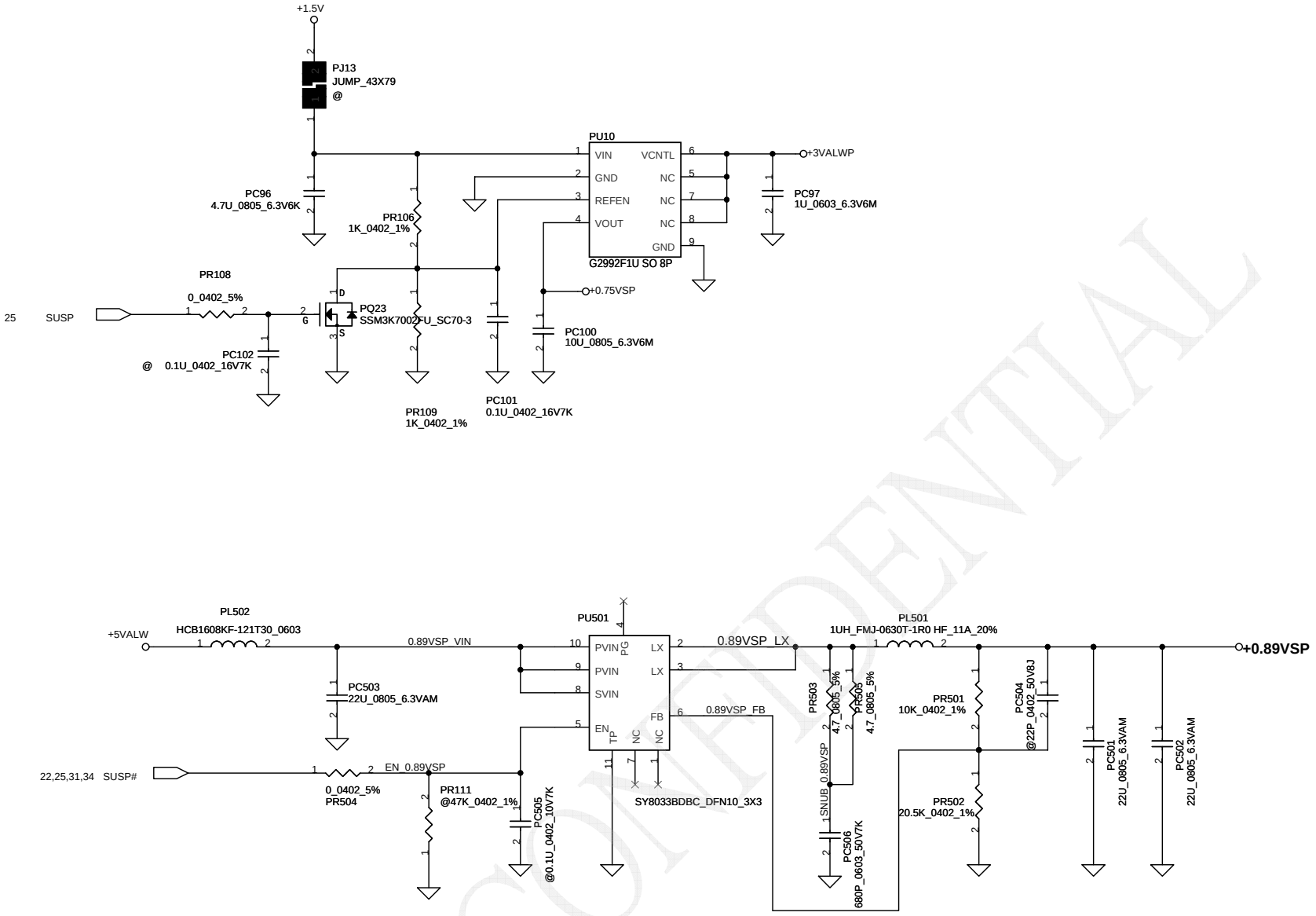

CONFIDENTIAL

Security Classification	Compal Secret Data		
Issued Date	2010/02/02	Deciphered Date	2011/02/02

THIS SHEET OF ENGINEERING DRAWING IS THE PROPRIETARY PROPERTY OF COMPAL ELECTRONICS, INC. AND CONTAINS CONFIDENTIAL AND TRADE SECRET INFORMATION. THIS SHEET MAY NOT BE TRANSFERED FROM THE CUSTODY OF THE COMPETENT DIVISION OF R&D DEPARTMENT EXCEPT AS AUTHORIZED BY COMPAL ELECTRONICS, INC. NEITHER THIS SHEET NOR THE INFORMATION IT CONTAINS MAY BE USED BY OR DISCLOSED TO ANY THIRD PARTY WITHOUT PRIOR WRITTEN CONSENT OF COMPAL ELECTRONICS, INC.

Compal Electronics, Inc.

Title: SCHEMATIC MB A5662

Size: B | Document Number: 401898 | Rev: B

Date: Friday, June 04, 2010 | Sheet 32 of 36

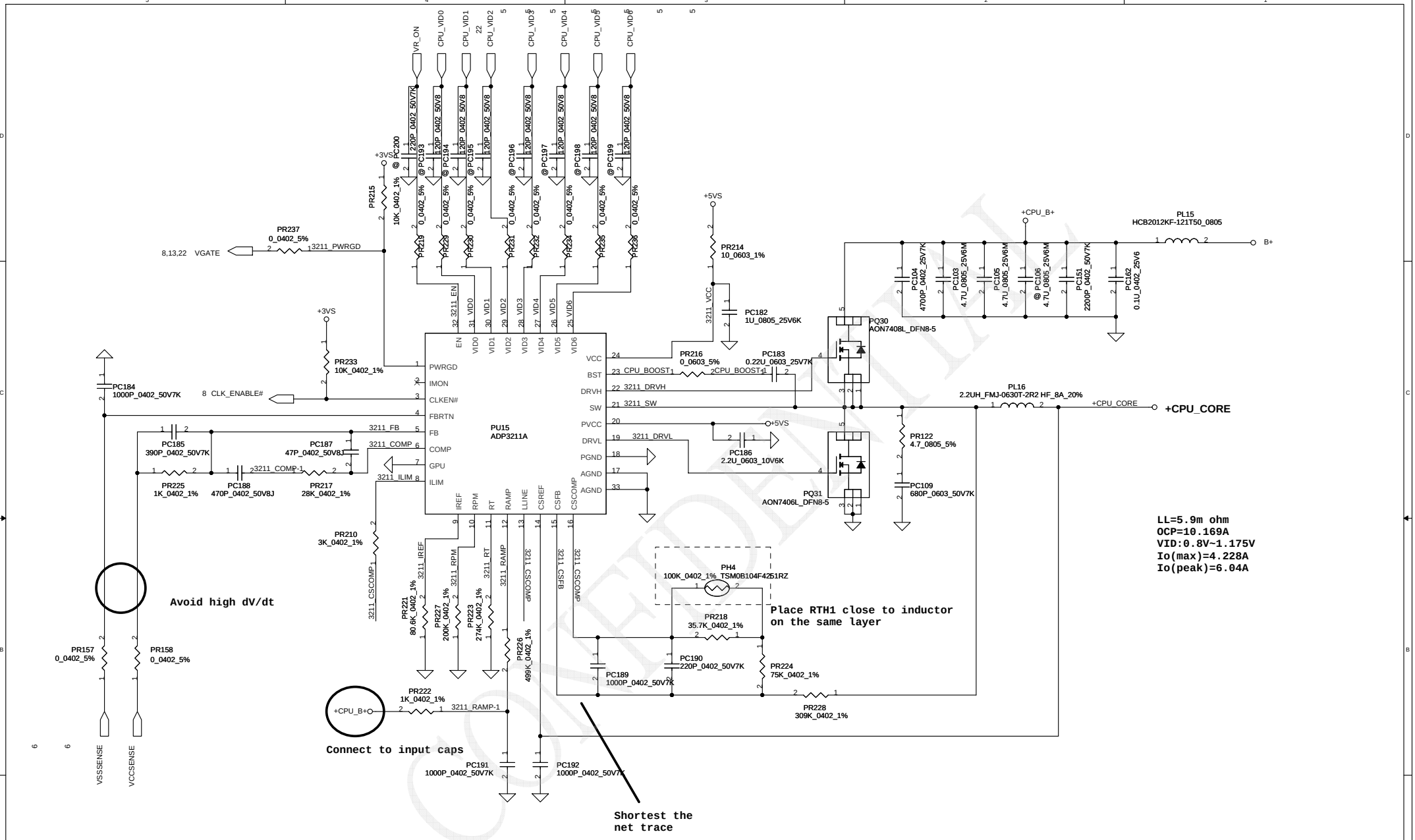

COMPANY CONFIDENTIAL

Security Classification	Compal Secret Data		
Issued Date	2010/02/02	Deciphered Date	2011/02/02

THIS SHEET OF ENGINEERING DRAWING IS THE PROPRIETARY PROPERTY OF COMPAL ELECTRONICS, INC. AND CONTAINS CONFIDENTIAL AND TRADE SECRET INFORMATION. THIS SHEET MAY NOT BE TRANSFERED FROM THE CUSTODY OF THE COMPETENT DIVISION OF R&D DEPARTMENT EXCEPT AS AUTHORIZED BY COMPAL ELECTRONICS, INC. NEITHER THIS SHEET NOR THE INFORMATION IT CONTAINS MAY BE USED BY OR DISCLOSED TO ANY THIRD PARTY WITHOUT PRIOR WRITTEN CONSENT OF COMPAL ELECTRONICS, INC.

401898

Compal Electronics, Inc.

Title: **SCHEMATIC MB A5662**

Size	Document Number	Rev
Custom	401898	B

Date: Friday, June 04, 2010 | Sheet 33 of 36

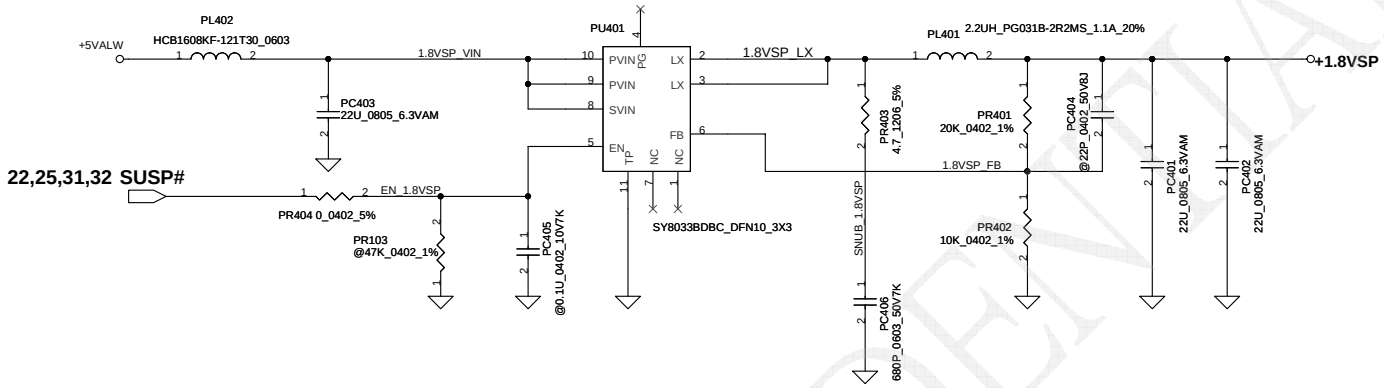

<Vo=1.8V> VFB=0.6V
Vo=VFB*(1+PR401/PR402)=0.6*(1+40.2K/20K)=1.806V
Ipeak=2.64A, Imax=1.848A

CONFIDENTIAL

Security Classification	Compal Secret Data			Compal Electronics, Inc.
Issued Date	2010/02/02	Deciphered Date	2011/02/02	Title: SCHEMATIC MB A5662
				Size: Document Number: 401898 Rev: B
				Date: Friday, June 04, 2010 Sheet 34 of 36

THIS SHEET OF ENGINEERING DRAWING IS THE PROPRIETARY PROPERTY OF COMPAL ELECTRONICS, INC. AND CONTAINS CONFIDENTIAL AND TRADE SECRET INFORMATION. THIS SHEET MAY NOT BE TRANSFERED FROM THE CUSTODY OF THE COMPETENT DIVISION OF R&D DEPARTMENT EXCEPT AS AUTHORIZED BY COMPAL ELECTRONICS, INC. NEITHER THIS SHEET NOR THE INFORMATION IT CONTAINS MAY BE USED BY OR DISCLOSED TO ANY THIRD PARTY WITHOUT PRIOR WRITTEN CONSENT OF COMPAL ELECTRONICS, INC.

Page	Reason for change	Modify list
28	DFX issue	PQ39 from SB000006800 to SB000009610
29	DFX issue	PQ29、PQ40、PQ44 from SB000006800 to SB000009610
32	DFX issue	PQ23 from SB000006800 to SB000009610
28	let PH1 and PH4 use the same material	PH1 from SL200000V00 to SL200000U00
29	Improve switching ability	PQ13 from AON7408 to AON7406
32	SY8033 design change	PL501 from 2R2 to 1R0 PR501 from 121k to 12.1k PR502 from 249k to 24.9k
34	SY8033 design change	PR401 from 40.2k to 20k, PR402 from 20k to 10k

CONFIDENTIAL

PIR (Product Improve Record)

SCHEMATIC CHANGE LIST
REVISION CHANGE: 0.1--> 0.2

NO	DATE	PAGE	MODIFICATION LIST	PURPOSE
1	3/29	P.23	Mount C136,C149,C160,C159,C146,C168,C135,C155,C171,C133,C148,C170 C132,C147,C158,C169,C131,C157,C145,C166,C144,C134,C167,C156	For EMI request.
2	3/29	P.5	Remove R906,Q901,R905,C913,R907,C914 Mount R903	For EMI request.
3	5/7	P.25	change C291 from 0.01u to 0.022u	For design change.

PINEVIEW-M U71 PINEVIEW-M_FCBGA8559 N475R1@

PINEVIEW-M U71 PINEVIEW-M_FCBGA8559 N455R3@

PINEVIEW-M U71 PINEVIEW-M_FCBGA8559 N475R3@

TGP U72 TIGERPOINT_ES1_BGA360 R3@

CONFIDENTIAL

Security Classification	Compal Secret Data		
Issued Date	2010/02/02	Deciphered Date	2011/02/02

THIS SHEET OF ENGINEERING DRAWING IS THE PROPRIETARY PROPERTY OF COMPAL ELECTRONICS, INC. AND CONTAINS CONFIDENTIAL AND TRADE SECRET INFORMATION. THIS SHEET MAY NOT BE TRANSFERED FROM THE CUSTODY OF THE COMPETENT DIVISION OF R&D DEPARTMENT EXCEPT AS AUTHORIZED BY COMPAL ELECTRONICS, INC. NEITHER THIS SHEET NOR THE INFORMATION IT CONTAINS MAY BE USED BY OR DISCLOSED TO ANY THIRD PARTY WITHOUT PRIOR WRITTEN CONSENT OF COMPAL ELECTRONICS, INC.

Compal Electronics, Inc.

Title: SCHEMATIC MB A5662

Size | Document Number: 401898 | Rev: B

Date: Friday, June 04, 2010 | Sheet 36 of 36