Compal Confidential

NTV00

LA-5661 Rev 1.0 Schematics

Intel PineView Processor/ Tiger point

2010-01-07 REV : 1.0

Security Classification	Compal Secret Data		
Issued Date	2009/11/10	Deciphered Date	2010/11/10

THIS SHEET OF ENGINEERING DRAWING IS THE PROPRIETARY PROPERTY OF COMPAL ELECTRONICS, INC. AND CONTAINS CONFIDENTIAL AND TRADE SECRET INFORMATION. THIS SHEET MAY NOT BE TRANSFERED FROM THE CUSTODY OF THE COMPETENT DIVISION OF R&D DEPARTMENT EXCEPT AS AUTHORIZED BY COMPAL ELECTRONICS, INC. NEITHER THIS SHEET NOR THE INFORMATION IT CONTAINS MAY BE USED BY OR DISCLOSED TO ANY THIRD PARTY WITHOUT PRIOR WRITTEN CONSENT OF COMPAL ELECTRONICS, INC.

Compal Electronics, Inc.

Title	Cover Page	
Size Custom	Document Number NTV00 LA5661P M/B	Rev 1.0
Date: Thursday, January 07, 2010	Sheet 1 of 35	

Compal Confidential

Model Name : NTV00
File Name : LA-5661P

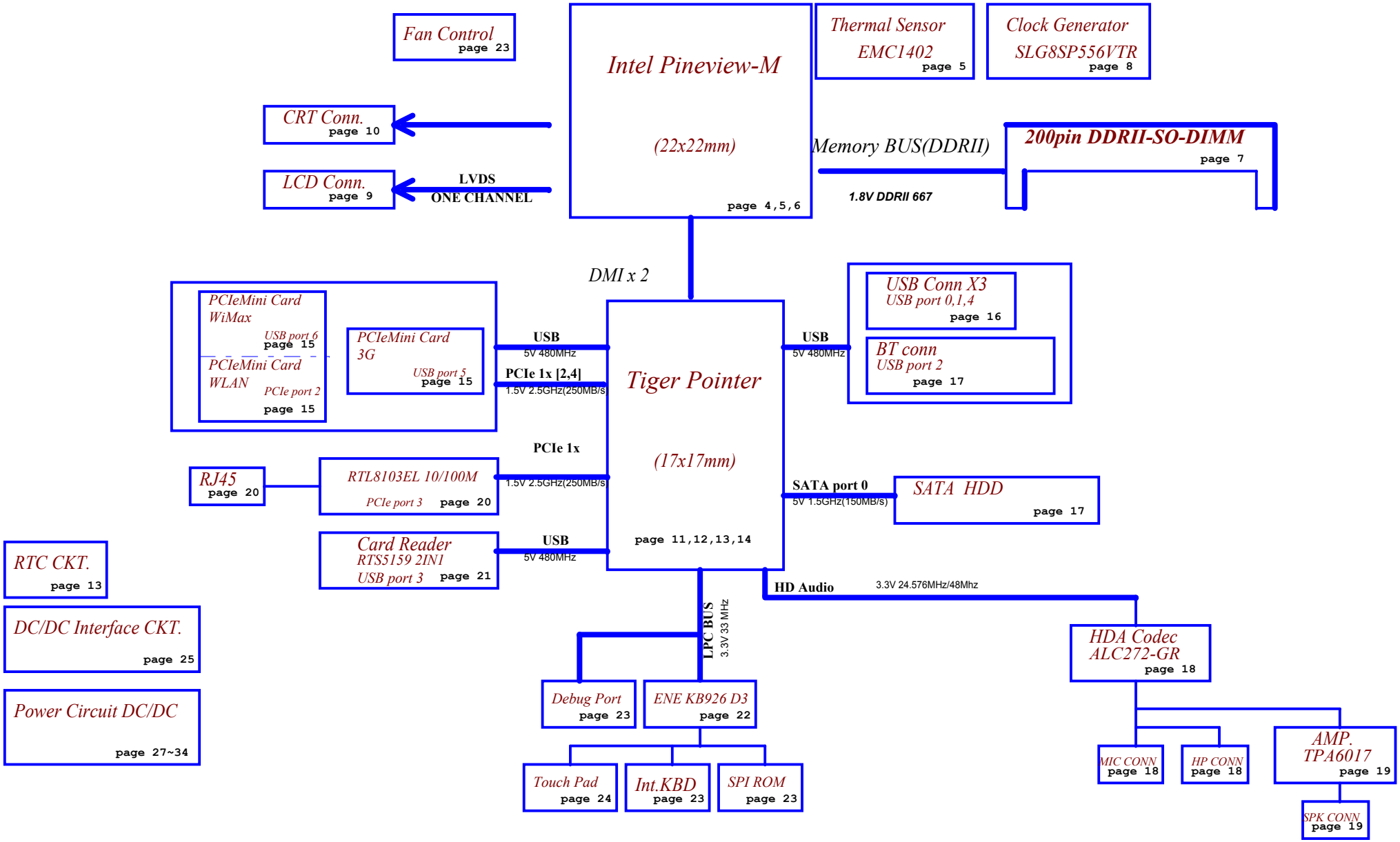

Security Classification	Compal Secret Data		
Issued Date	2009/11/10	Deciphered Date	2010/11/10

THIS SHEET OF ENGINEERING DRAWING IS THE PROPRIETARY PROPERTY OF COMPAL ELECTRONICS, INC. AND CONTAINS CONFIDENTIAL AND TRADE SECRET INFORMATION. THIS SHEET MAY NOT BE TRANSFERED FROM THE CUSTODY OF THE COMPETENT DIVISION OF R&D DEPARTMENT EXCEPT AS AUTHORIZED BY COMPAL ELECTRONICS, INC. NEITHER THIS SHEET NOR THE INFORMATION IT CONTAINS MAY BE USED BY OR DISCLOSED TO ANY THIRD PARTY WITHOUT PRIOR WRITTEN CONSENT OF COMPAL ELECTRONICS, INC.

Compal Electronics, Inc.

Title: Block Diagrams

Size | Document Number: NTV00 LA5661P M/B | Rev 1.0

Date: Thursday, January 07, 2010 | Sheet 2 of 35

Voltage Rails

Power Plane	Description	S1	S3	S5	G3
VIN	Adapter power supply (19V)	ON	ON	ON	OFF
B+	AC or battery power rail for power circuit.	ON	ON	ON	ON
+CPU_CORE	Core voltage for CPU	ON	OFF	OFF	OFF
+0.89VS	0.89VS GFX support voltage	ON	OFF	OFF	OFF
+0.9VS	0.9V switched power rail for DDR terminator	ON	OFF	OFF	OFF
+1.05VS	VCCP switched power rail	ON	OFF	OFF	OFF
+1.5VS	1.5V switched power rail	ON	OFF	OFF	OFF
+1.8V	1.8V power rail for DDR	ON	ON	OFF	OFF
+1.8VS	1.8VS switched power rail	ON	OFF	OFF	OFF
+3VALW	3.3V always on power rail	ON	ON	ON	OFF
+3V_SB	3.3V power rail for LAN	ON	ON	OFF	OFF
+3V_LAN	3.3V power rail for LAN	ON	ON	OFF	OFF
+RTCVCC	RTC power	ON	ON	ON	ON
+3VS	3.3V switched power rail	ON	OFF	OFF	OFF
+5VALW	5V always on power rail	ON	ON	ON	OFF
+5V_SB	5V power rail for SB	ON	ON	OFF	OFF
+5VS	5V switched power rail	ON	OFF	OFF	OFF
+VSB	VSB always on power rail	ON	ON	ON	OFF

Note : ON* means that this power plane is ON only with AC power available, otherwise it is OFF.

STATE \ SIGNAL	SLP_S3#	SLP_S4#	SLP_S5#	+VALW	+V	+VS	Clock
Full ON	HIGH	HIGH	HIGH	ON	ON	ON	ON
S1(Power On Suspend)	HIGH	HIGH	HIGH	ON	ON	ON	LOW
S3 (Suspend to RAM)	LOW	HIGH	HIGH	ON	ON	OFF	OFF
S4 (Suspend to Disk)	LOW	LOW	HIGH	ON	OFF	OFF	OFF
S5 (Soft OFF)	LOW	LOW	LOW	ON	OFF	OFF	OFF

BTO Option Table

Function	Mini PCI-E SLOT				STAR			
description								
explain	Wi-Fi	WiMax	3G		POWER SAVING			
BTO	WLAN@	WIMAX@	3G@		STAR@			

Function			
description			
explain			
BTO			

EC SM Bus1 address

Device	Address
Smart Battery	0001 011X b

EC SM Bus2 address

Device	Address
EMC1402	1001 010X b

Tiger point SM Bus address

Device	Address
Clock Generator (SLG8SP556VTR)	1101 001Xb
DDR DIMMA	1010 000Xb

Security Classification	Compal Secret Data		
Issued Date	2009/11/10	Deciphered Date	2010/11/10

THIS SHEET OF ENGINEERING DRAWING IS THE PROPRIETARY PROPERTY OF COMPAL ELECTRONICS, INC. AND CONTAINS CONFIDENTIAL AND TRADE SECRET INFORMATION. THIS SHEET MAY NOT BE TRANSFERED FROM THE CUSTODY OF THE COMPETENT DIVISION OF R&D DEPARTMENT EXCEPT AS AUTHORIZED BY COMPAL ELECTRONICS, INC. NEITHER THIS SHEET NOR THE INFORMATION IT CONTAINS MAY BE USED BY OR DISCLOSED TO ANY THIRD PARTY WITHOUT PRIOR WRITTEN CONSENT OF COMPAL ELECTRONICS, INC.

Compal Electronics, Inc.

Title: Notes List

Size: Custom | Document Number: NTV00 LA5661P M/B | Rev: 1.0

Date: Thursday, January 07, 2010 | Sheet 3 of 35

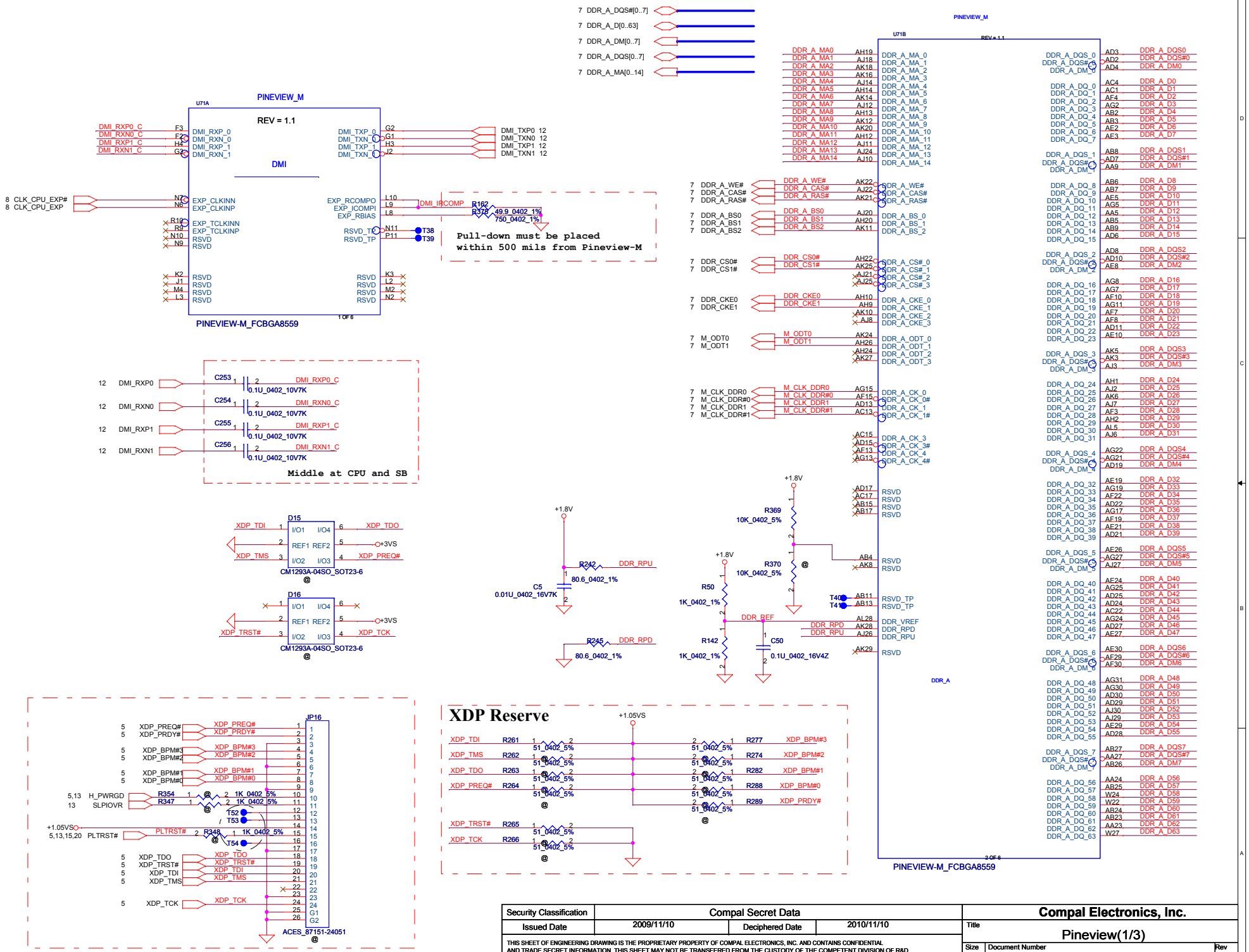

Security Classification	Compal Secret Data		
Issued Date	2009/11/10	Deciphered Date	2010/11/10

THIS SHEET OF ENGINEERING DRAWING IS THE PROPRIETARY PROPERTY OF COMPAL ELECTRONICS, INC. AND CONTAINS CONFIDENTIAL AND TRADE SECRET INFORMATION. THIS SHEET MAY NOT BE TRANSFERRED FROM THE CUSTODY OF THE COMPETENT DIVISION OF R&D DEPARTMENT EXCEPT AS AUTHORIZED BY COMPAL ELECTRONICS, INC. NEITHER THIS SHEET NOR THE INFORMATION IT CONTAINS MAY BE USED BY OR DISCLOSED TO ANY THIRD PARTY WITHOUT PRIOR WRITTEN CONSENT OF COMPAL ELECTRONICS, INC.

Compal Electronics, Inc.

Title: Pineview(1/3)

Size: Custom | Document Number: NTV00 LA5661P M/B | Rev: 1.0

Date: Thursday, January 07, 2010 | Sheet 4 of 35

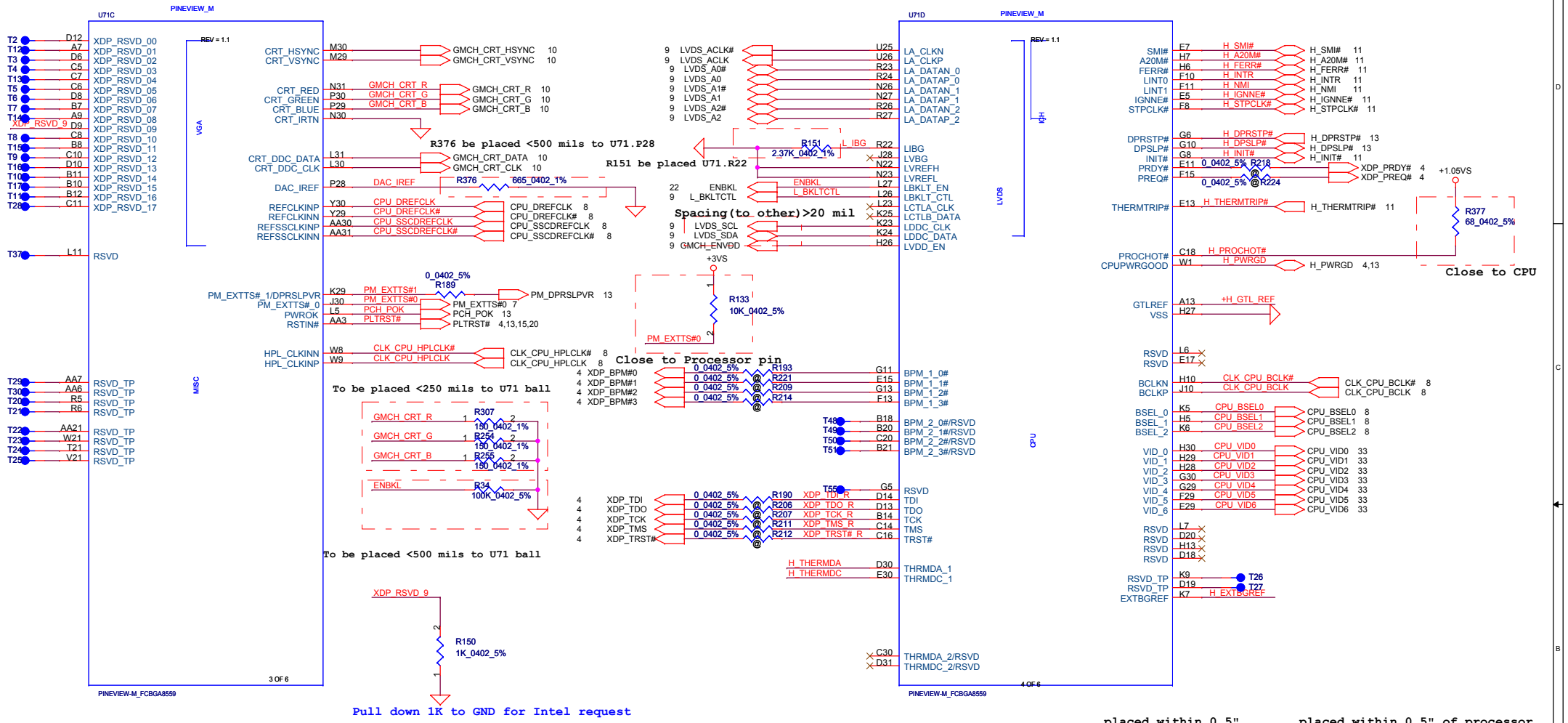

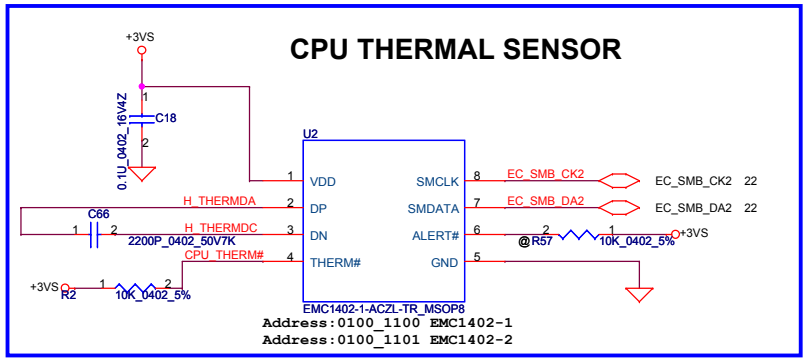

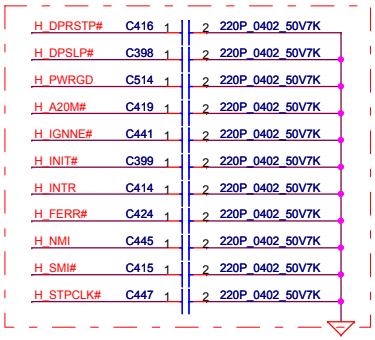

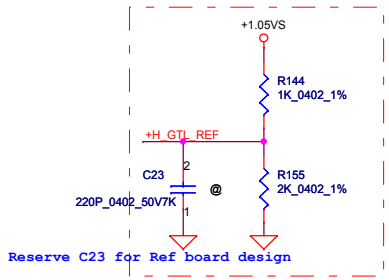

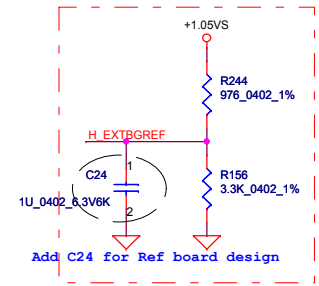

Security Classification	Compal Secret Data		
Issued Date	2009/11/10	Deciphered Date	2010/11/10

THIS SHEET OF ENGINEERING DRAWING IS THE PROPRIETARY PROPERTY OF COMPAL ELECTRONICS, INC. AND CONTAINS CONFIDENTIAL AND TRADE SECRET INFORMATION. THIS SHEET MAY NOT BE TRANSFERED FROM THE CUSTODY OF THE COMPETENT DIVISION OF R&D DEPARTMENT EXCEPT AS AUTHORIZED BY COMPAL ELECTRONICS, INC. NEITHER THIS SHEET NOR THE INFORMATION IT CONTAINS MAY BE USED BY OR DISCLOSED TO ANY THIRD PARTY WITHOUT PRIOR WRITTEN CONSENT OF COMPAL ELECTRONICS, INC.

Compal Electronics, Inc.

Title: Pineview(2/3)

Size: B | Document Number: NTV00 LA5661P M/B | Rev: 1.0

Date: Thursday, January 07, 2010 | Sheet 5 of 35

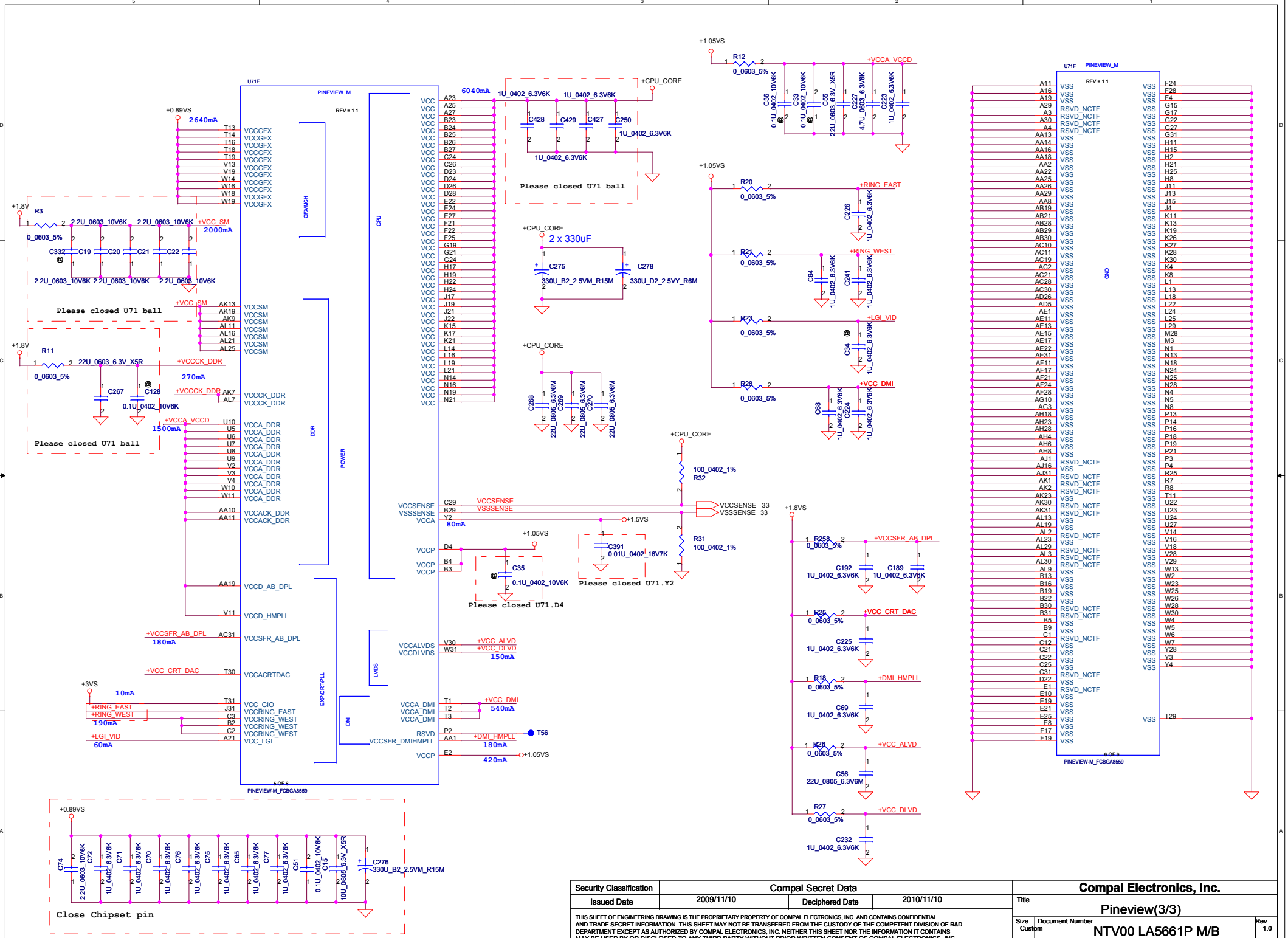

Security Classification	Compal Secret Data		
Issued Date	2009/11/10	Deciphered Date	2010/11/10

THIS SHEET OF ENGINEERING DRAWING IS THE PROPRIETARY PROPERTY OF COMPAL ELECTRONICS, INC. AND CONTAINS CONFIDENTIAL AND TRADE SECRET INFORMATION. THIS SHEET MAY NOT BE TRANSFERED FROM THE CUSTODY OF THE COMPETENT DIVISION OF R&D DEPARTMENT EXCEPT AS AUTHORIZED BY COMPAL ELECTRONICS, INC. NEITHER THIS SHEET NOR THE INFORMATION IT CONTAINS MAY BE USED BY OR DISCLOSED TO ANY THIRD PARTY WITHOUT PRIOR WRITTEN CONSENT OF COMPAL ELECTRONICS, INC.

Compal Electronics, Inc.

Title: Pineview(3/3)

Size: Custom | Document Number: NTV00 LA5661P M/B | Rev: 1.0

Date: Thursday, January 07, 2010 | Sheet 6 of 35

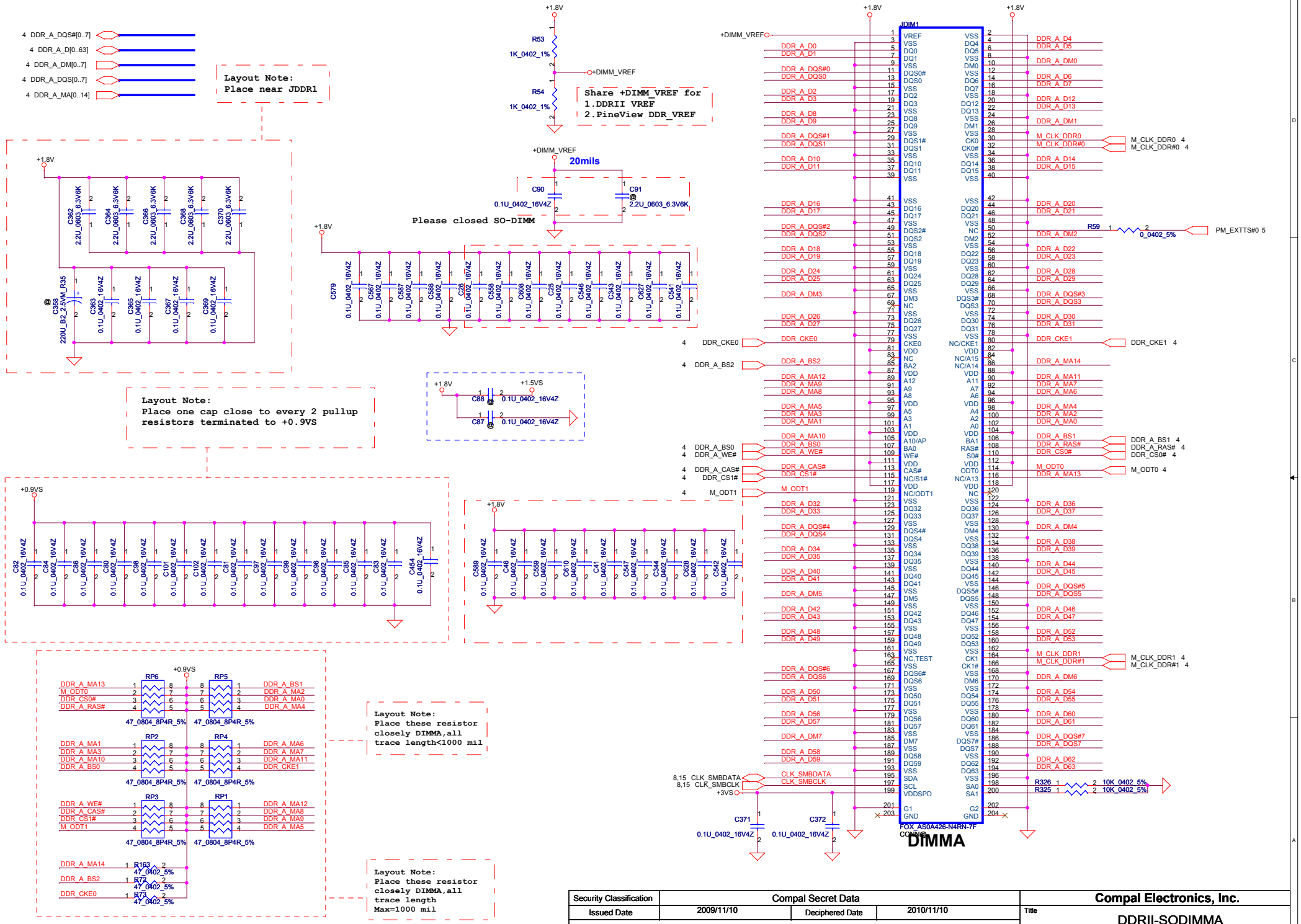

Security Classification	Compal Secret Data		
Issued Date	2009/11/10	Deciphered Date	2010/11/10

THIS SHEET OF ENGINEERING DRAWING IS THE PROPRIETARY PROPERTY OF COMPAL ELECTRONICS, INC. AND CONTAINS CONFIDENTIAL AND TRADE SECRET INFORMATION. THIS SHEET MAY NOT BE TRANSFERED FROM THE CUSTODY OF THE COMPETENT DIVISION OF R&D DEPARTMENT EXCEPT AS AUTHORIZED BY COMPAL ELECTRONICS, INC. NEITHER THIS SHEET NOR THE INFORMATION IT CONTAINS MAY BE USED BY OR DISCLOSED TO ANY THIRD PARTY WITHOUT PRIOR WRITTEN CONSENT OF COMPAL ELECTRONICS, INC.

Compal Electronics, Inc.

Title: DDRII-SODIMMA

Size	Document Number	Rev
Custom	NTV00 LA5661P M/B	1.0

Date: Thursday, January 07, 2010 | Sheet 7 of 35

FSC CLKSEL2	FSB CLKSEL1	FSA CLKSEL0	CPU MHz	SRC MHz	PCI MHz	REF MHz	DOT_96 MHz	USB MHz
0	0	0	266	100	33.3	14.318	96.0	48.0
0	0	1	133	100	33.3	14.318	96.0	48.0
0	1	0	200	100	33.3	14.318	96.0	48.0
0	1	1	166	100	33.3	14.318	96.0	48.0
1	0	0	333	100	33.3	14.318	96.0	48.0
1	0	1	100	100	33.3	14.318	96.0	48.0
1	1	0	400	100	33.3	14.318	96.0	48.0
1	1	1	Reserved					

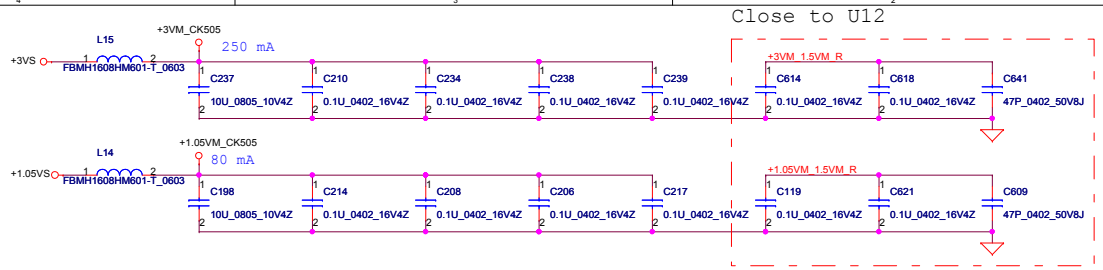

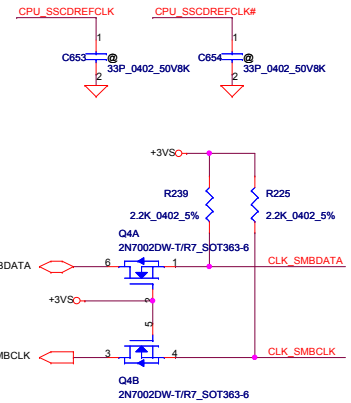

SA000020K00 (Silego : SLG8SP556VTR)

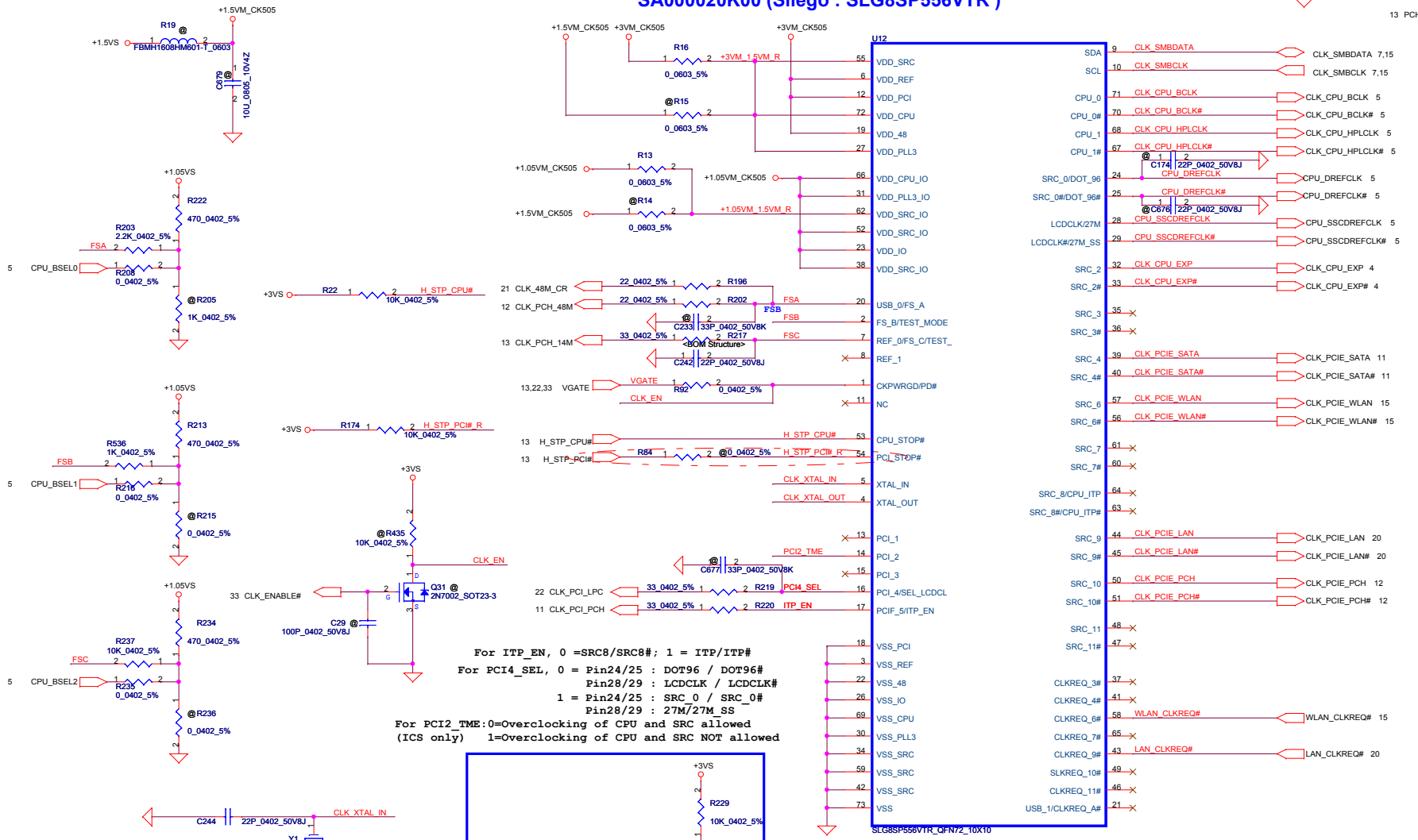

SRC PORT LIST

PORT	DEVICE
SRC0	CPU_DREFCLK
SRC2	CPU_EXP
SRC3	
SRC4	PCIE_SATA
SRC6	PCIE_WLAN
SRC7	
SRC8	
SRC9	PCIE_LAN
SRC10	PCIE_PCH
SRC11	

REQ PORT LIST

PORT	DEVICE
REQ_3#	
REQ_4#	
REQ_6#	PEIC_WLAN
REQ_7#	
REQ_9#	PCIE_LAN
REQ_10#	
REQ_11#	
REQ_A#	

For ITP_EN, 0 =SRC8/SRC8#; 1 = ITP/ITP#
For PCI4_SEL, 0 = Pin24/25 : DOT96 / DOT96#
Pin28/29 : LCDCLK / LCDCLK#
1 = Pin24/25 : SRC_0 / SRC_0#
Pin28/29 : 27M/27M_SS
For PCI2_TME:0=Overclocking of CPU and SRC allowed
(ICS only) 1=Overclocking of CPU and SRC NOT allowed

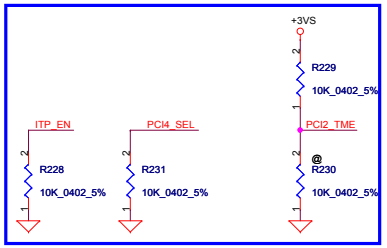

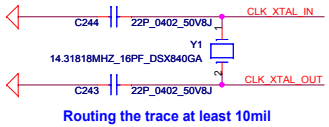

Routing the trace at least 10mil

Security Classification	Compal Secret Data		
Issued Date	2009/11/10	Deciphered Date	2010/11/10

THIS SHEET OF ENGINEERING DRAWING IS THE PROPRIETARY PROPERTY OF COMPAL ELECTRONICS, INC. AND CONTAINS CONFIDENTIAL AND TRADE SECRET INFORMATION. THIS SHEET MAY NOT BE TRANSFERRED FROM THE CUSTODY OF THE COMPETENT DIVISION OF R&D DEPARTMENT EXCEPT AS AUTHORIZED BY COMPAL ELECTRONICS, INC. NEITHER THIS SHEET NOR THE INFORMATION IT CONTAINS MAY BE USED BY OR DISCLOSED TO ANY THIRD PARTY WITHOUT PRIOR WRITTEN CONSENT OF COMPAL ELECTRONICS, INC.

Compal Electronics, Inc.

Title: Clock Generator CK505

Size | Document Number: NTV00 LA5661P M/B | Rev 1.0

Date: Thursday, January 07, 2010 | Sheet 8 of 35

LCD POWER CIRCUIT

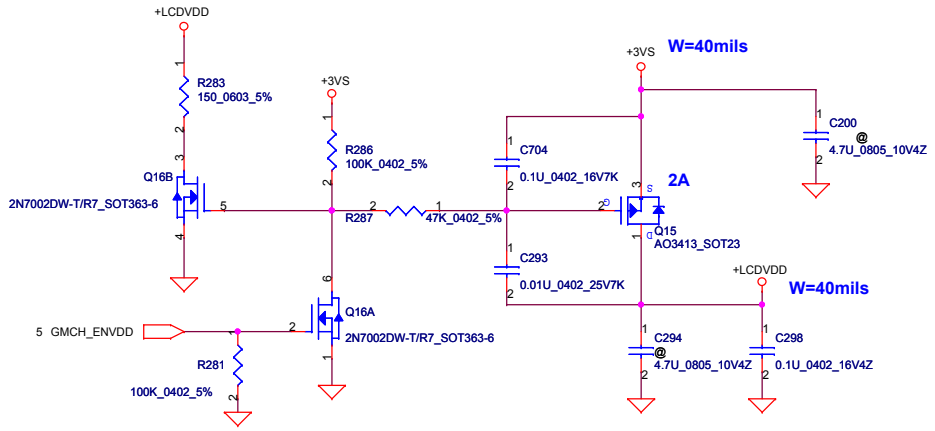

LED/PANEL BD. Conn.

Combine INT.CARMERA with
LVDS

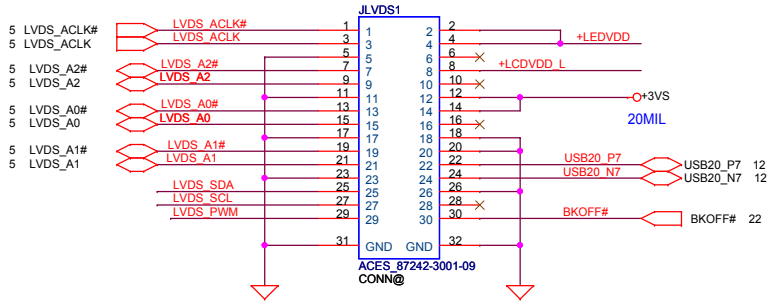

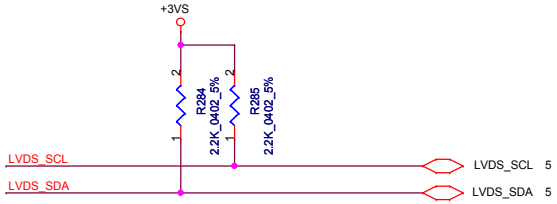

Option panel brightness control

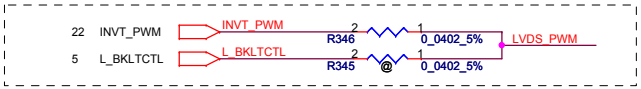

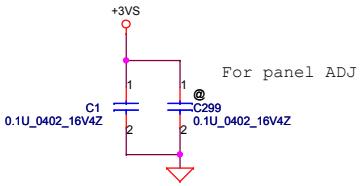

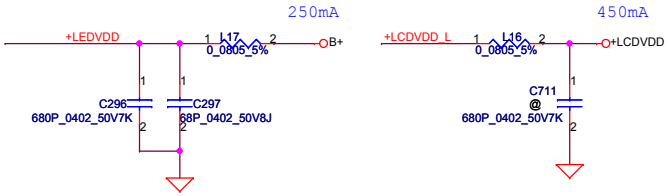

Security Classification	Compal Secret Data		
Issued Date	2009/11/10	Deciphered Date	2010/11/10

THIS SHEET OF ENGINEERING DRAWING IS THE PROPRIETARY PROPERTY OF COMPAL ELECTRONICS, INC. AND CONTAINS CONFIDENTIAL AND TRADE SECRET INFORMATION. THIS SHEET MAY NOT BE TRANSFERED FROM THE CUSTODY OF THE COMPETENT DIVISION OF R&D DEPARTMENT EXCEPT AS AUTHORIZED BY COMPAL ELECTRONICS, INC. NEITHER THIS SHEET NOR THE INFORMATION IT CONTAINS MAY BE USED BY OR DISCLOSED TO ANY THIRD PARTY WITHOUT PRIOR WRITTEN CONSENT OF COMPAL ELECTRONICS, INC.

Compal Electronics, Inc.

Title: LVDS /INVERTER

Size | Document Number: NTV00 LA5661P M/B | Rev: 1.0

Date: Thursday, January 07, 2010 | Sheet 9 of 35

CRT CONNECTOR

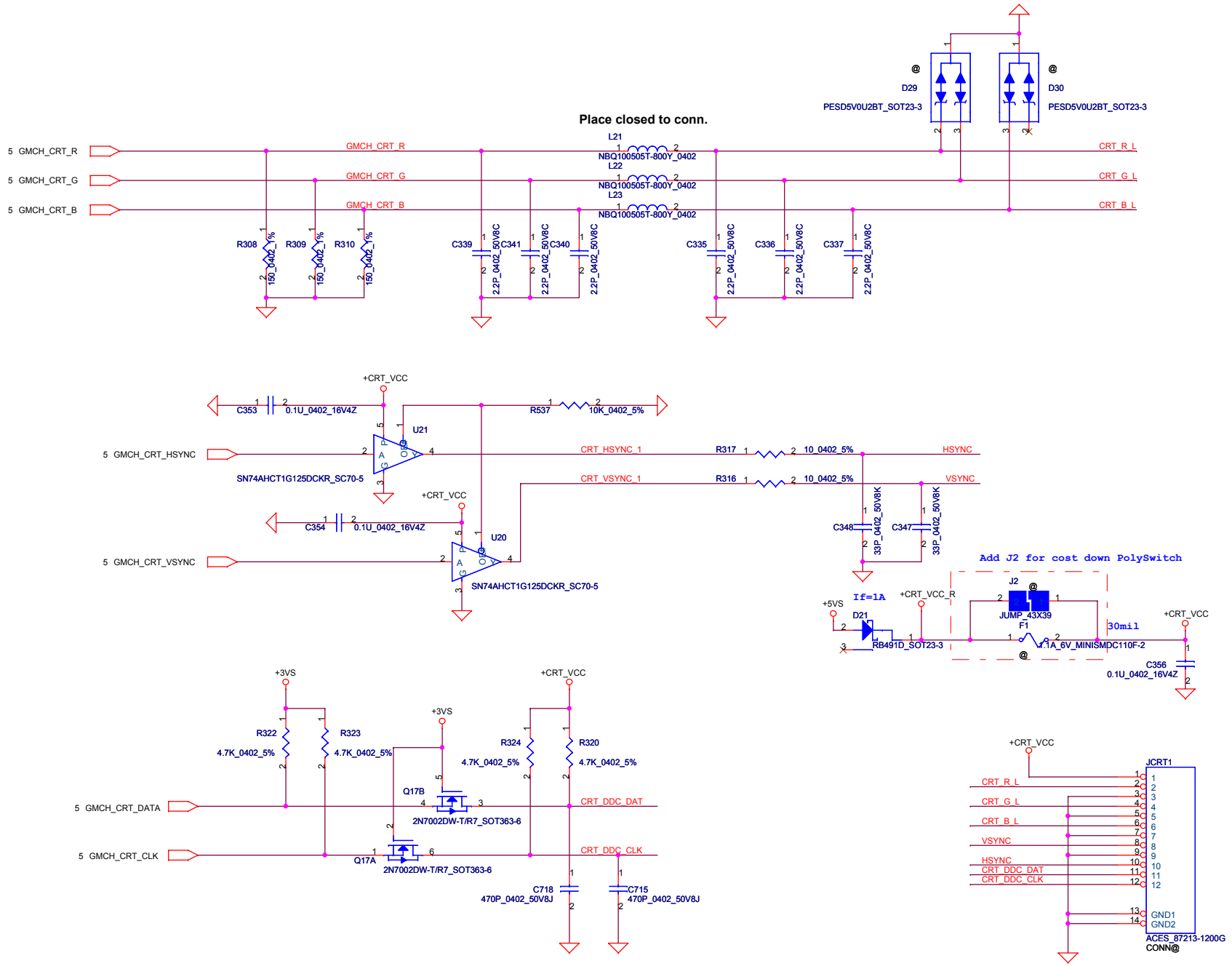

Security Classification	Compal Secret Data		
Issued Date	2009/11/10	Deciphered Date	2010/11/10

THIS SHEET OF ENGINEERING DRAWING IS THE PROPRIETARY PROPERTY OF COMPAL ELECTRONICS, INC. AND CONTAINS CONFIDENTIAL AND TRADE SECRET INFORMATION. THIS SHEET MAY NOT BE TRANSFERED FROM THE CUSTODY OF THE COMPETENT DIVISION OF R&D DEPARTMENT EXCEPT AS AUTHORIZED BY COMPAL ELECTRONICS, INC. NEITHER THIS SHEET NOR THE INFORMATION IT CONTAINS MAY BE USED BY OR DISCLOSED TO ANY THIRD PARTY WITHOUT PRIOR WRITTEN CONSENT OF COMPAL ELECTRONICS, INC.

Compal Electronics, Inc.

Title: CRT PORT

Size | Document Number: NTV00 LA5661P M/B | Rev: 1.0

Date: Thursday, January 07, 2010 | Sheet 10 of 35

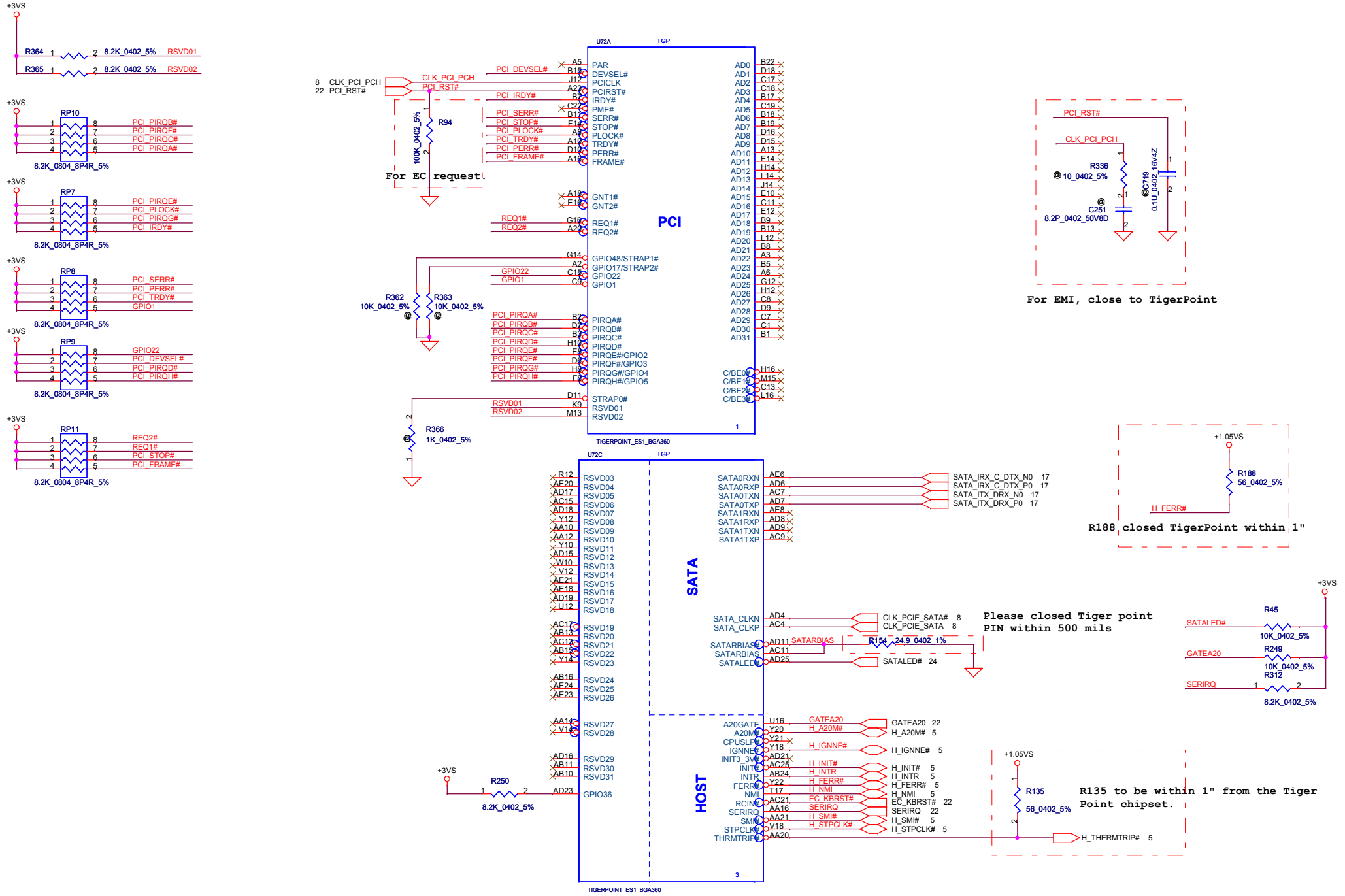

Security Classification	Compal Secret Data		
Issued Date	2009/11/10	Deciphered Date	2010/11/10

THIS SHEET OF ENGINEERING DRAWING IS THE PROPRIETARY PROPERTY OF COMPAL ELECTRONICS, INC. AND CONTAINS CONFIDENTIAL AND TRADE SECRET INFORMATION. THIS SHEET MAY NOT BE TRANSFERED FROM THE CUSTODY OF THE COMPETENT DIVISION OF R&D DEPARTMENT EXCEPT AS AUTHORIZED BY COMPAL ELECTRONICS, INC. NEITHER THIS SHEET NOR THE INFORMATION IT CONTAINS MAY BE USED BY OR DISCLOSED TO ANY THIRD PARTY WITHOUT PRIOR WRITTEN CONSENT OF COMPAL ELECTRONICS, INC.

Compal Electronics, Inc.

Title: Tigerpoint(1/4)

Size | Document Number: NTV00 LA5661P M/B | Rev: 1.0

Date: Thursday, January 07, 2010 | Sheet 11 of 35

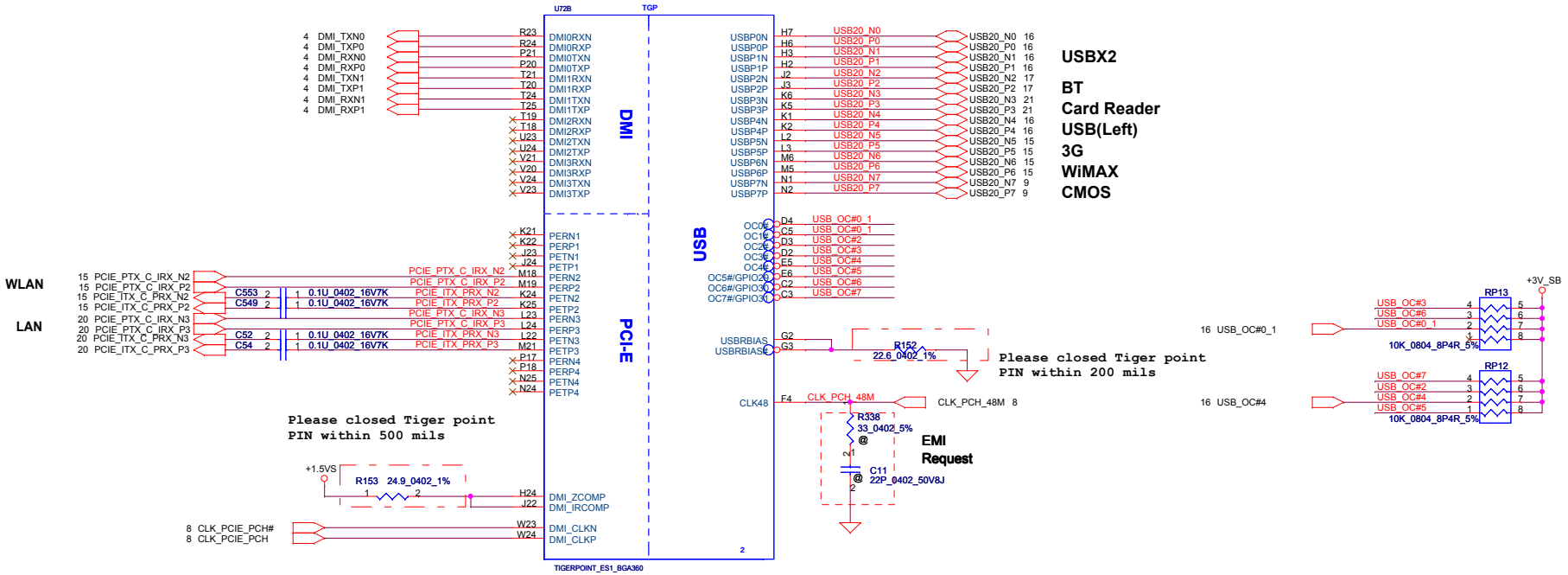

Security Classification	Compal Secret Data		
Issued Date	2009/11/10	Deciphered Date	2010/11/10

THIS SHEET OF ENGINEERING DRAWING IS THE PROPRIETARY PROPERTY OF COMPAL ELECTRONICS, INC. AND CONTAINS CONFIDENTIAL AND TRADE SECRET INFORMATION. THIS SHEET MAY NOT BE TRANSFERED FROM THE CUSTODY OF THE COMPETENT DIVISION OF R&D DEPARTMENT EXCEPT AS AUTHORIZED BY COMPAL ELECTRONICS, INC. NEITHER THIS SHEET NOR THE INFORMATION IT CONTAINS MAY BE USED BY OR DISCLOSED TO ANY THIRD PARTY WITHOUT PRIOR WRITTEN CONSENT OF COMPAL ELECTRONICS, INC.

Compal Electronics, Inc.

Title: Tigerpoint(2/4)

Size: Custom | Document Number: NTV00 LA5661P M/B | Rev: 1.0

Date: Thursday, January 07, 2010 | Sheet 12 of 35

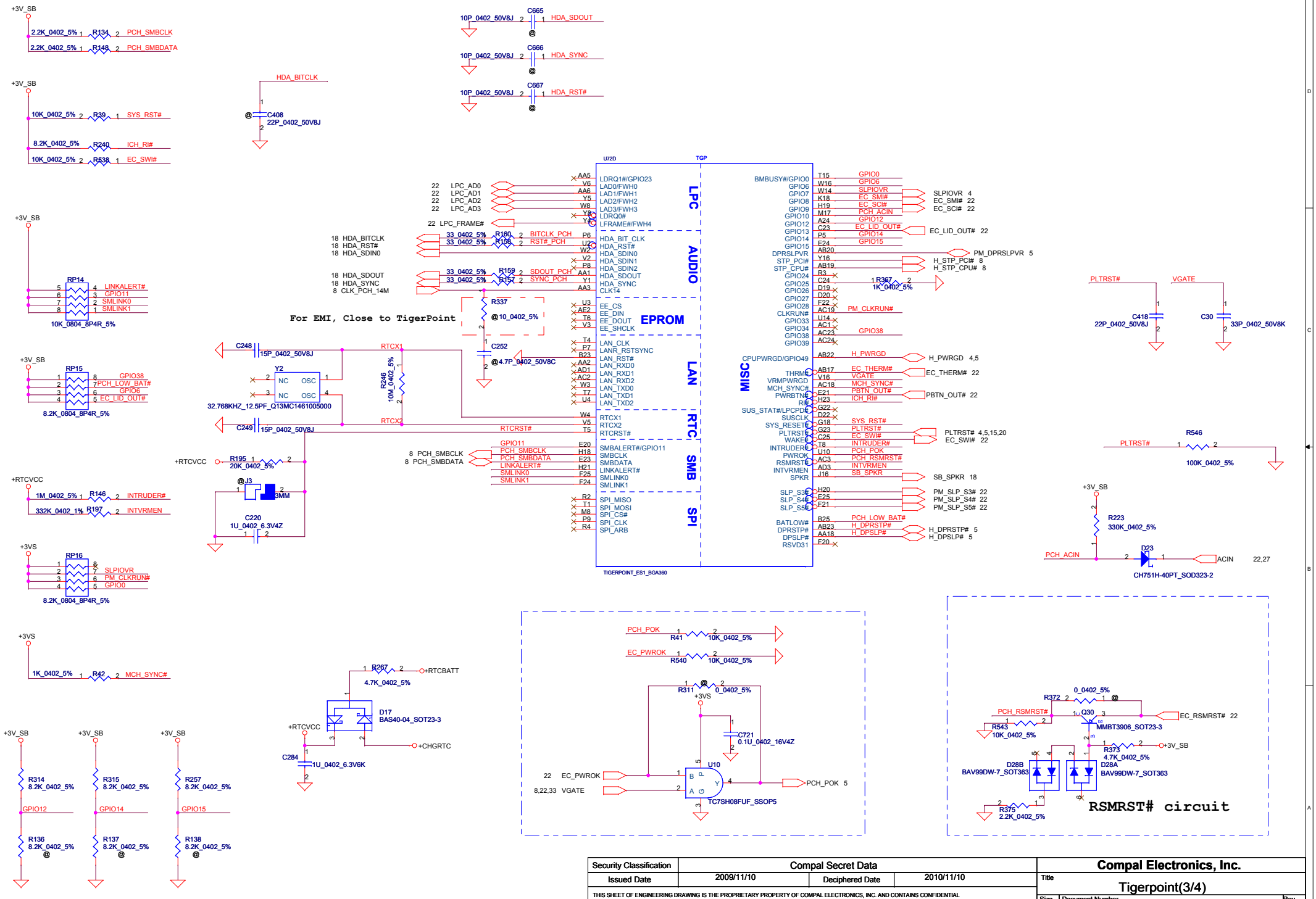

Security Classification	Compal Secret Data		
Issued Date	2009/11/10	Deciphered Date	2010/11/10

THIS SHEET OF ENGINEERING DRAWING IS THE PROPRIETARY PROPERTY OF COMPAL ELECTRONICS, INC. AND CONTAINS CONFIDENTIAL AND TRADE SECRET INFORMATION. THIS SHEET MAY NOT BE TRANSFERED FROM THE CUSTODY OF THE COMPETENT DIVISION OF R&D DEPARTMENT EXCEPT AS AUTHORIZED BY COMPAL ELECTRONICS, INC. NEITHER THIS SHEET NOR THE INFORMATION IT CONTAINS MAY BE USED BY OR DISCLOSED TO ANY THIRD PARTY WITHOUT PRIOR WRITTEN CONSENT OF COMPAL ELECTRONICS, INC.

Compal Electronics, Inc.

Title: Tigerpoint(3/4)

Size: Custom | Document Number: NTV00 LA5661P M/B | Rev: 1.0

Date: Thursday, January 07, 2010 | Sheet 13 of 35

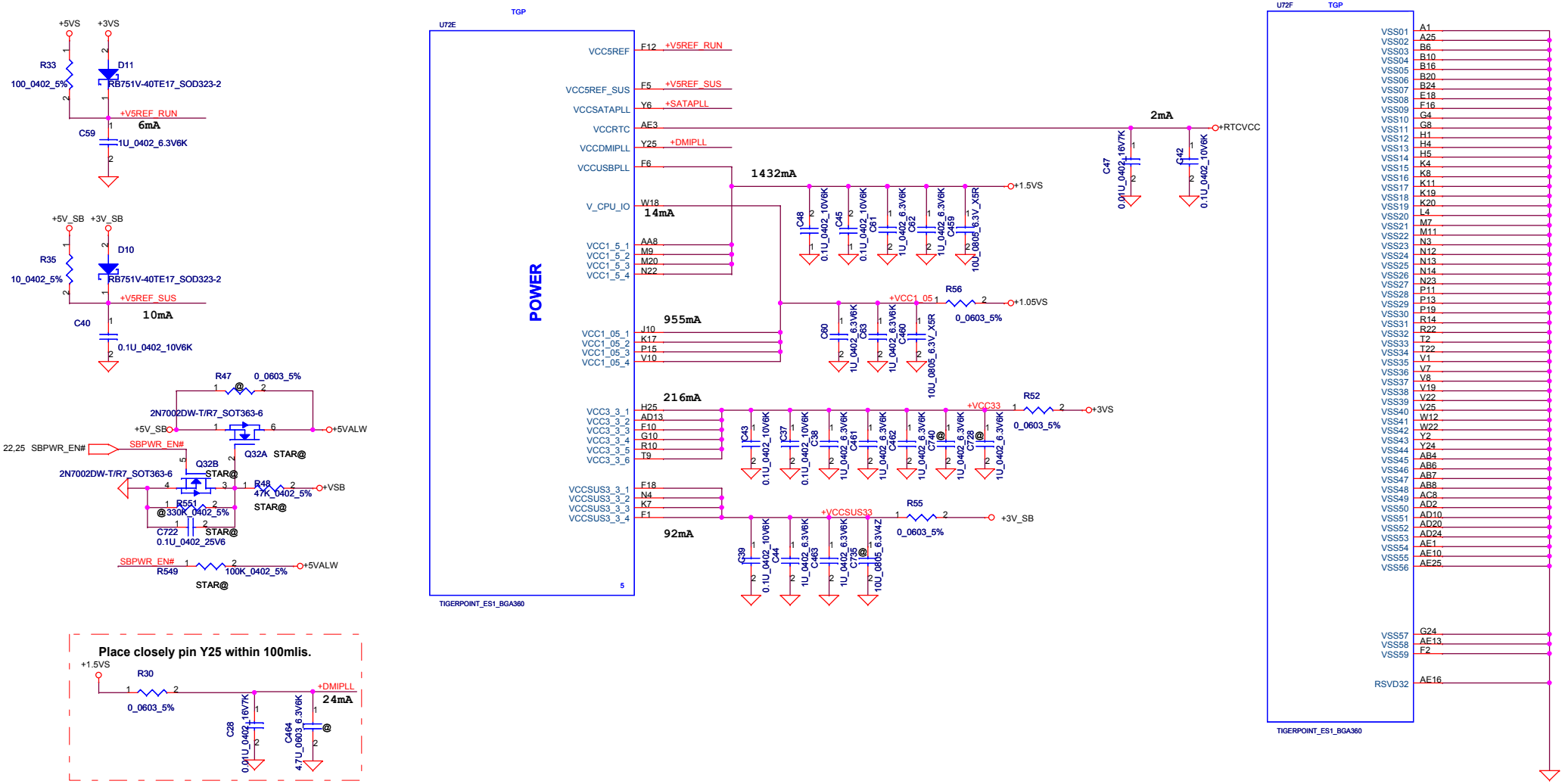

Security Classification	Compal Secret Data		
Issued Date	2009/11/10	Deciphered Date	2010/11/10

THIS SHEET OF ENGINEERING DRAWING IS THE PROPRIETARY PROPERTY OF COMPAL ELECTRONICS, INC. AND CONTAINS CONFIDENTIAL AND TRADE SECRET INFORMATION. THIS SHEET MAY NOT BE TRANSFERED FROM THE CUSTODY OF THE COMPETENT DIVISION OF R&D DEPARTMENT EXCEPT AS AUTHORIZED BY COMPAL ELECTRONICS, INC. NEITHER THIS SHEET NOR THE INFORMATION IT CONTAINS MAY BE USED BY OR DISCLOSED TO ANY THIRD PARTY WITHOUT PRIOR WRITTEN CONSENT OF COMPAL ELECTRONICS, INC.

Compal Electronics, Inc.

Title: Tigerpoint(4/4)

Size: Custom | Document Number: NTV00 LA5661P M/B | Rev: 1.0

Date: Thursday, January 07, 2010 | Sheet 14 of 35

Mini-Express Card for WLAN

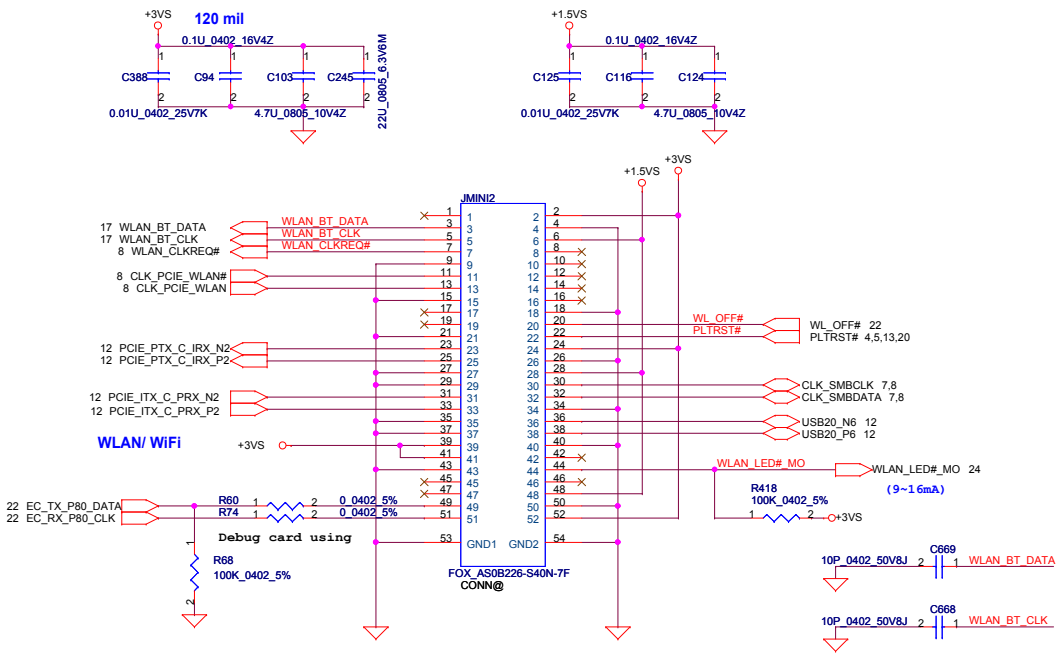

Mini-Express Card for 3G

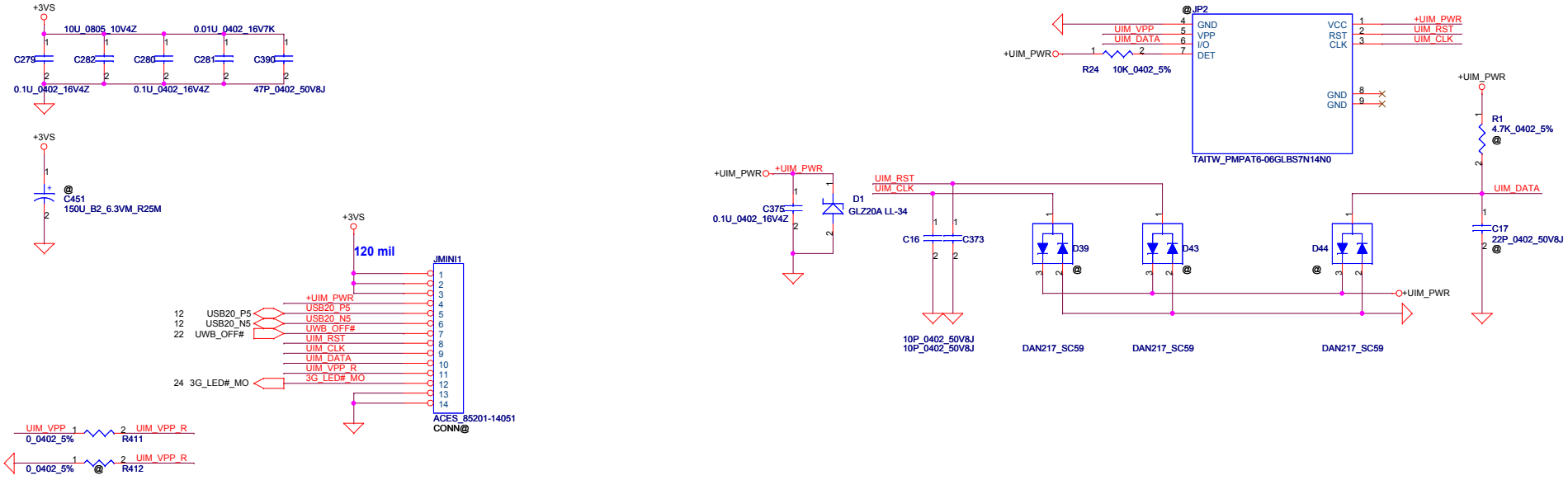

Security Classification	Compal Secret Data		
Issued Date	2009/11/10	Deciphered Date	2010/11/10

THIS SHEET OF ENGINEERING DRAWING IS THE PROPRIETARY PROPERTY OF COMPAL ELECTRONICS, INC. AND CONTAINS CONFIDENTIAL AND TRADE SECRET INFORMATION. THIS SHEET MAY NOT BE TRANSFERED FROM THE CUSTODY OF THE COMPETENT DIVISION OF R&D DEPARTMENT EXCEPT AS AUTHORIZED BY COMPAL ELECTRONICS, INC. NEITHER THIS SHEET NOR THE INFORMATION IT CONTAINS MAY BE USED BY OR DISCLOSED TO ANY THIRD PARTY WITHOUT PRIOR WRITTEN CONSENT OF COMPAL ELECTRONICS, INC.

Compal Electronics, Inc.

Title: WLAN/3G

Size | Document Number: NTV00 LA5661P M/B | Rev: 1.0

Date: Thursday, January 07, 2010 | Sheet 15 of 35

USB X2

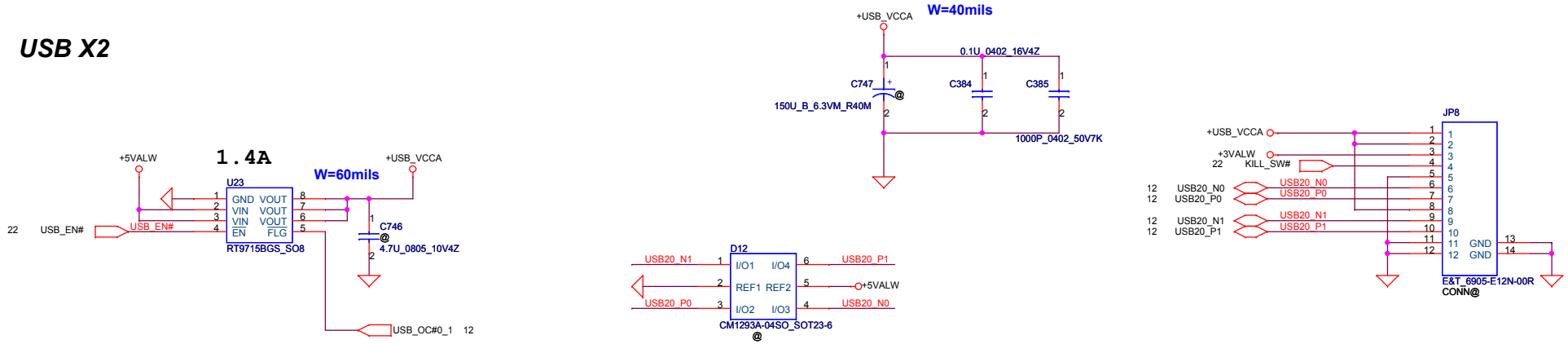

USB Board--Left

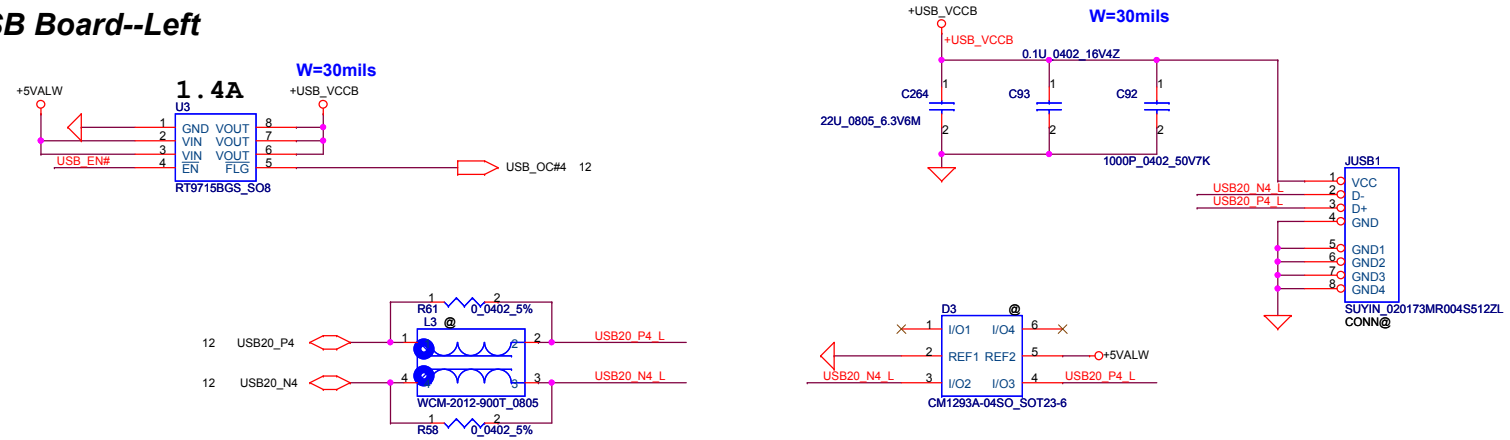

Security Classification	Compal Secret Data		
Issued Date	2009/11/10	Deciphered Date	2010/11/10

THIS SHEET OF ENGINEERING DRAWING IS THE PROPRIETARY PROPERTY OF COMPAL ELECTRONICS, INC. AND CONTAINS CONFIDENTIAL AND TRADE SECRET INFORMATION. THIS SHEET MAY NOT BE TRANSFERED FROM THE CUSTODY OF THE COMPETENT DIVISION OF R&D DEPARTMENT EXCEPT AS AUTHORIZED BY COMPAL ELECTRONICS, INC. NEITHER THIS SHEET NOR THE INFORMATION IT CONTAINS MAY BE USED BY OR DISCLOSED TO ANY THIRD PARTY WITHOUT PRIOR WRITTEN CONSENT OF COMPAL ELECTRONICS, INC.

Compal Electronics, Inc.

Title: USB Conn

Size | Document Number: NTV00 LA5661P M/B | Rev: 1.0

Date: Thursday, January 07, 2010 | Sheet 16 of 35

SATA Conn.

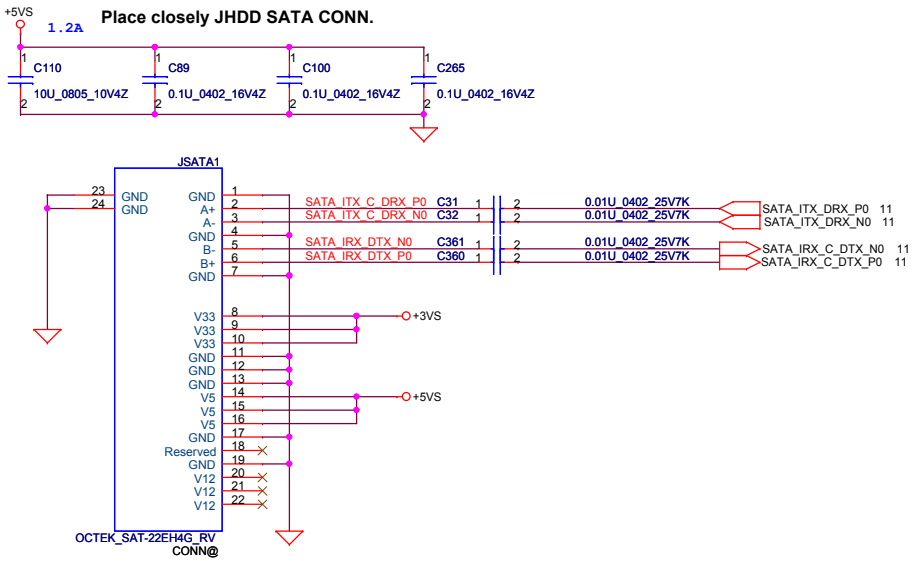

BlueTooth Interface

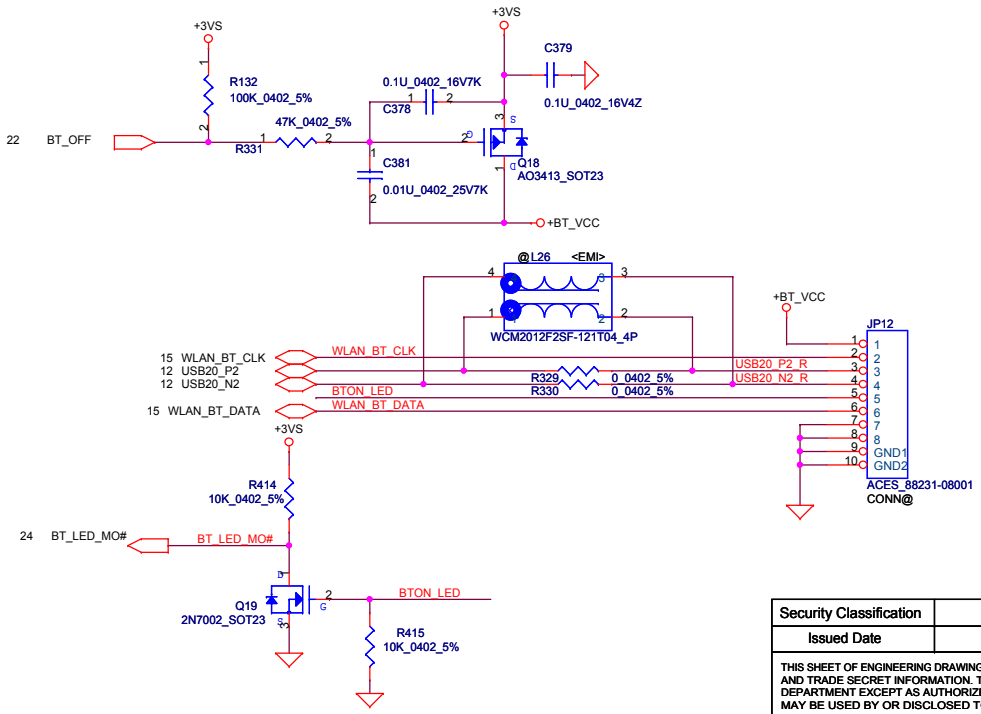

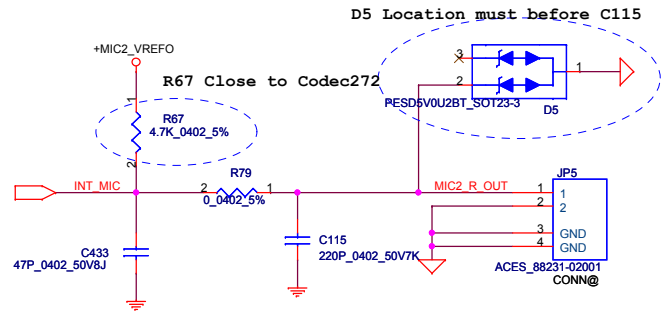

Security Classification	Compal Secret Data		
Issued Date	2009/11/10	Deciphered Date	2010/11/10

THIS SHEET OF ENGINEERING DRAWING IS THE PROPRIETARY PROPERTY OF COMPAL ELECTRONICS, INC. AND CONTAINS CONFIDENTIAL AND TRADE SECRET INFORMATION. THIS SHEET MAY NOT BE TRANSFERED FROM THE CUSTODY OF THE COMPETENT DIVISION OF R&D DEPARTMENT EXCEPT AS AUTHORIZED BY COMPAL ELECTRONICS, INC. NEITHER THIS SHEET NOR THE INFORMATION IT CONTAINS MAY BE USED BY OR DISCLOSED TO ANY THIRD PARTY WITHOUT PRIOR WRITTEN CONSENT OF COMPAL ELECTRONICS, INC.

Compal Electronics, Inc.

Title: SATA /BT/Int MIC

Size: Custom | Document Number: NTV00 LA5661P M/B | Rev: 1.0

Date: Thursday, January 07, 2010 | Sheet 17 of 35

HD Audio Codec

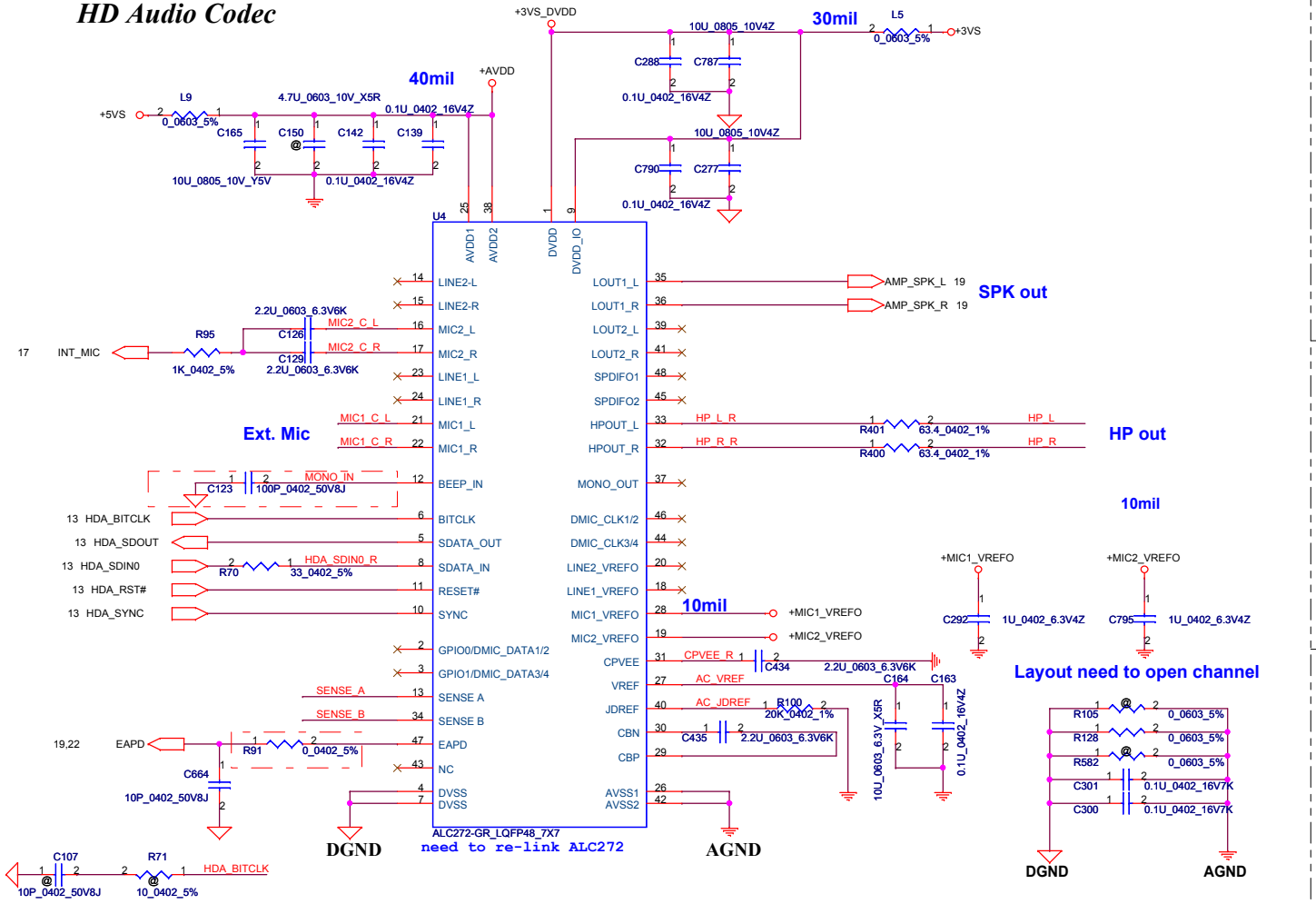

Beep sound

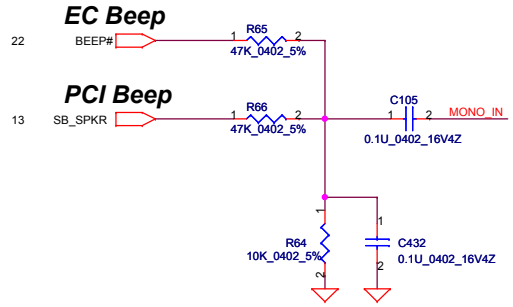

Head Phone JACK

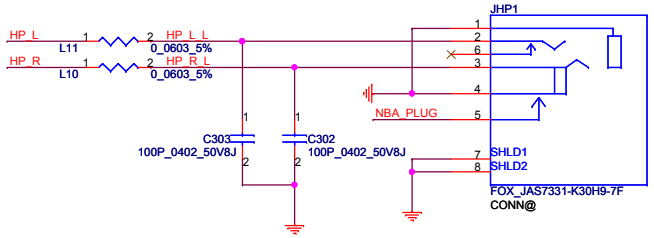

Ext. Mic

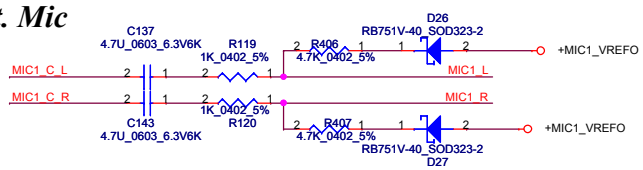

Ex.MIC JACK

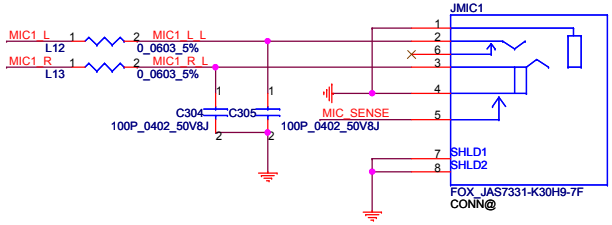

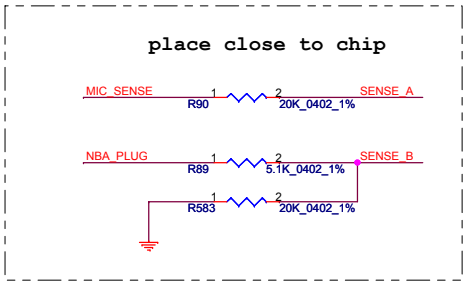

Sense Pin	Impedance	Codec Signals	Function
SENSE A	39.2K	PORT-A (PIN 39, 41)	
	20K	PORT-B (PIN 21, 22)	Ext. MIC
	10K	PORT-C (PIN 23, 24)	
	5.1K	PORT-D (PIN 35, 36)	SPK out
SENSE B	39.2K	PORT-E (PIN 14, 15)	
	20K	PORT-F (PIN 16, 17)	Int. MIC
	10K	PORT-H (PIN 37)	
	5.1K	PORT-I (PIN 32, 33)	Headphone out

Security Classification	Compal Secret Data		
Issued Date	2009/11/10	Deciphered Date	2010/11/10

THIS SHEET OF ENGINEERING DRAWING IS THE PROPRIETARY PROPERTY OF COMPAL ELECTRONICS, INC. AND CONTAINS CONFIDENTIAL AND TRADE SECRET INFORMATION. THIS SHEET MAY NOT BE TRANSFERED FROM THE CUSTODY OF THE COMPETENT DIVISION OF R&D DEPARTMENT EXCEPT AS AUTHORIZED BY COMPAL ELECTRONICS, INC. NEITHER THIS SHEET NOR THE INFORMATION IT CONTAINS MAY BE USED BY OR DISCLOSED TO ANY THIRD PARTY WITHOUT PRIOR WRITTEN CONSENT OF COMPAL ELECTRONICS, INC.

Compal Electronics, Inc.

Title: ALC272-GR Codec/HP/Ext. Jack

Size: Custom | Document Number: NTV00 LA5661P M/B | Rev: 1.0

Date: Thursday, January 07, 2010 | Sheet 18 of 35

TPA6017 Medium Range Amplifier

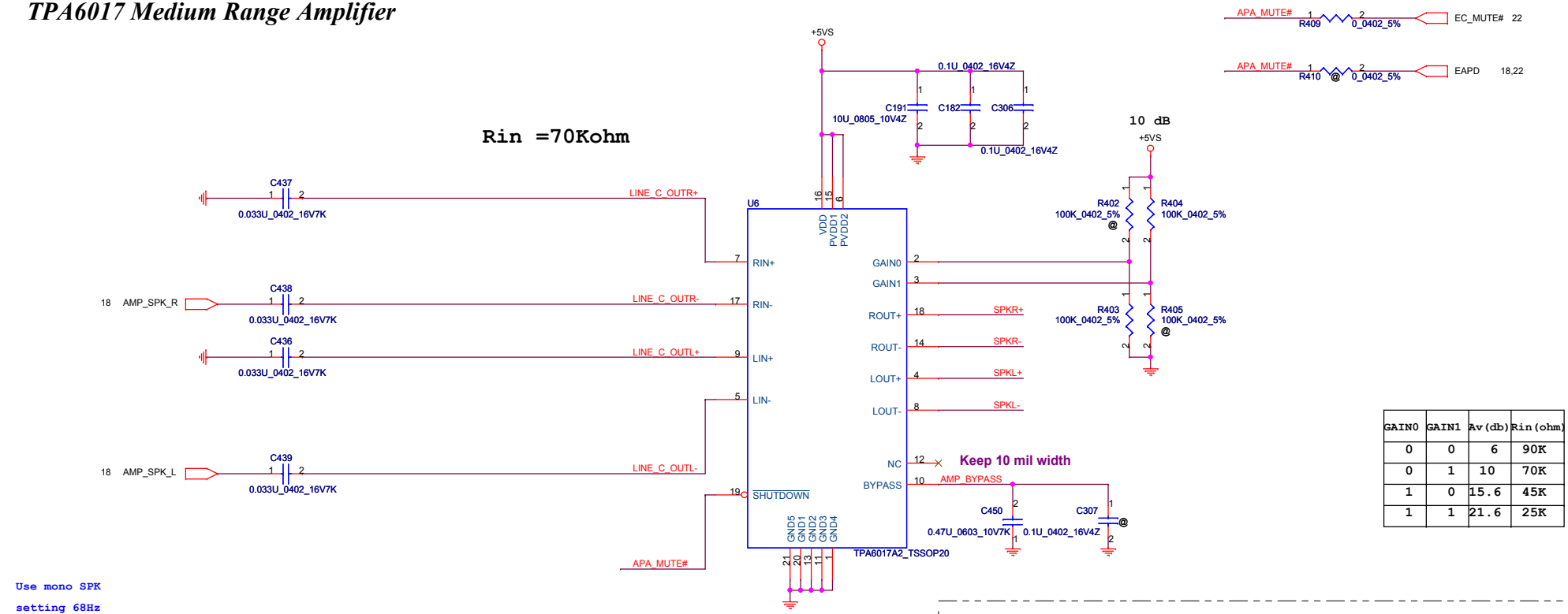

GAIN0	GAIN1	Av(db)	Rin(ohm)
0	0	6	90K
0	1	10	70K
1	0	15.6	45K
1	1	21.6	25K

Use mono SPK

setting 68Hz

F=1/2πRC --> -3db

C=0.033U,R=70K,F=68Hz

Left Speaker Connector

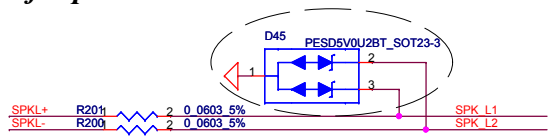

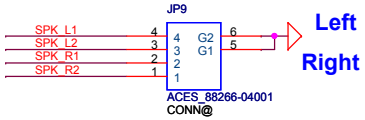

7/3 Change to SCA00000T00 for ESD request

Right Speaker Connector

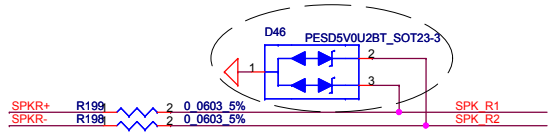

7/3 Change to SCA00000T00 for ESD request

Security Classification	Compal Secret Data		
Issued Date	2009/11/10	Deciphered Date	2010/11/10

THIS SHEET OF ENGINEERING DRAWING IS THE PROPRIETARY PROPERTY OF COMPAL ELECTRONICS, INC. AND CONTAINS CONFIDENTIAL AND TRADE SECRET INFORMATION. THIS SHEET MAY NOT BE TRANSFERED FROM THE CUSTODY OF THE COMPETENT DIVISION OF R&D DEPARTMENT EXCEPT AS AUTHORIZED BY COMPAL ELECTRONICS, INC. NEITHER THIS SHEET NOR THE INFORMATION IT CONTAINS MAY BE USED BY OR DISCLOSED TO ANY THIRD PARTY WITHOUT PRIOR WRITTEN CONSENT OF COMPAL ELECTRONICS, INC.

Compal Electronics, Inc.

Title: AMP/VR/Audio Jack/MIC

Size: Custom | Document Number: NTV00 LA5661P M/B | Rev: 1.0

Date: Thursday, January 07, 2010 | Sheet 19 of 35

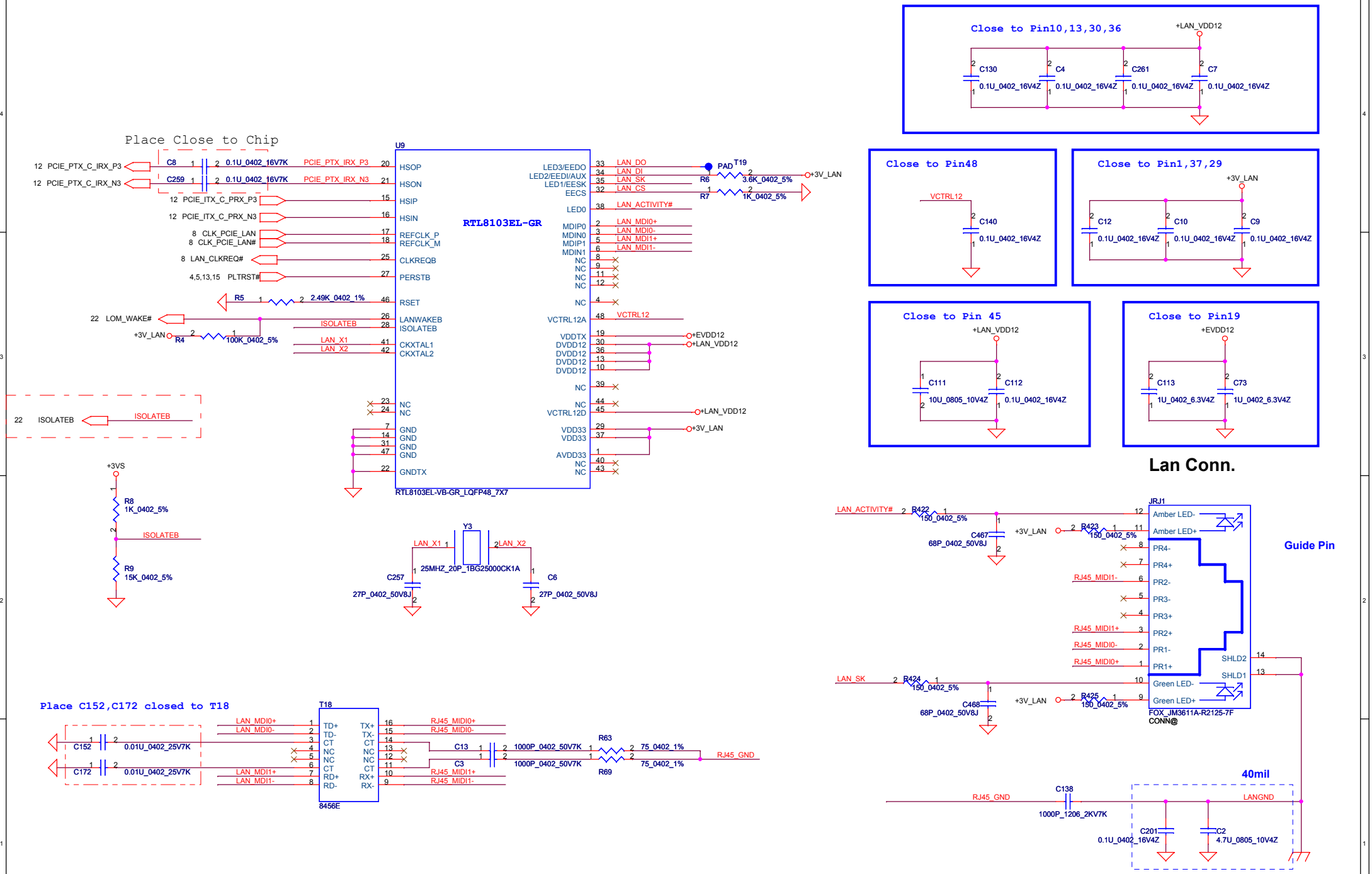

Security Classification	Compal Secret Data		
Issued Date	2009/11/10	Deciphered Date	2010/11/10

THIS SHEET OF ENGINEERING DRAWING IS THE PROPRIETARY PROPERTY OF COMPAL ELECTRONICS, INC. AND CONTAINS CONFIDENTIAL AND TRADE SECRET INFORMATION. THIS SHEET MAY NOT BE TRANSFERED FROM THE CUSTODY OF THE COMPETENT DIVISION OF R&D DEPARTMENT EXCEPT AS AUTHORIZED BY COMPAL ELECTRONICS, INC. NEITHER THIS SHEET NOR THE INFORMATION IT CONTAINS MAY BE USED BY OR DISCLOSED TO ANY THIRD PARTY WITHOUT PRIOR WRITTEN CONSENT OF COMPAL ELECTRONICS, INC.

Compal Electronics, Inc.

Title: RTL8103EL 10/100 LAN

Size: Custom | Document Number: NTV00 LA5661P M/B | Rev: 1.0

Date: Thursday, January 07, 2010 | Sheet 20 of 35

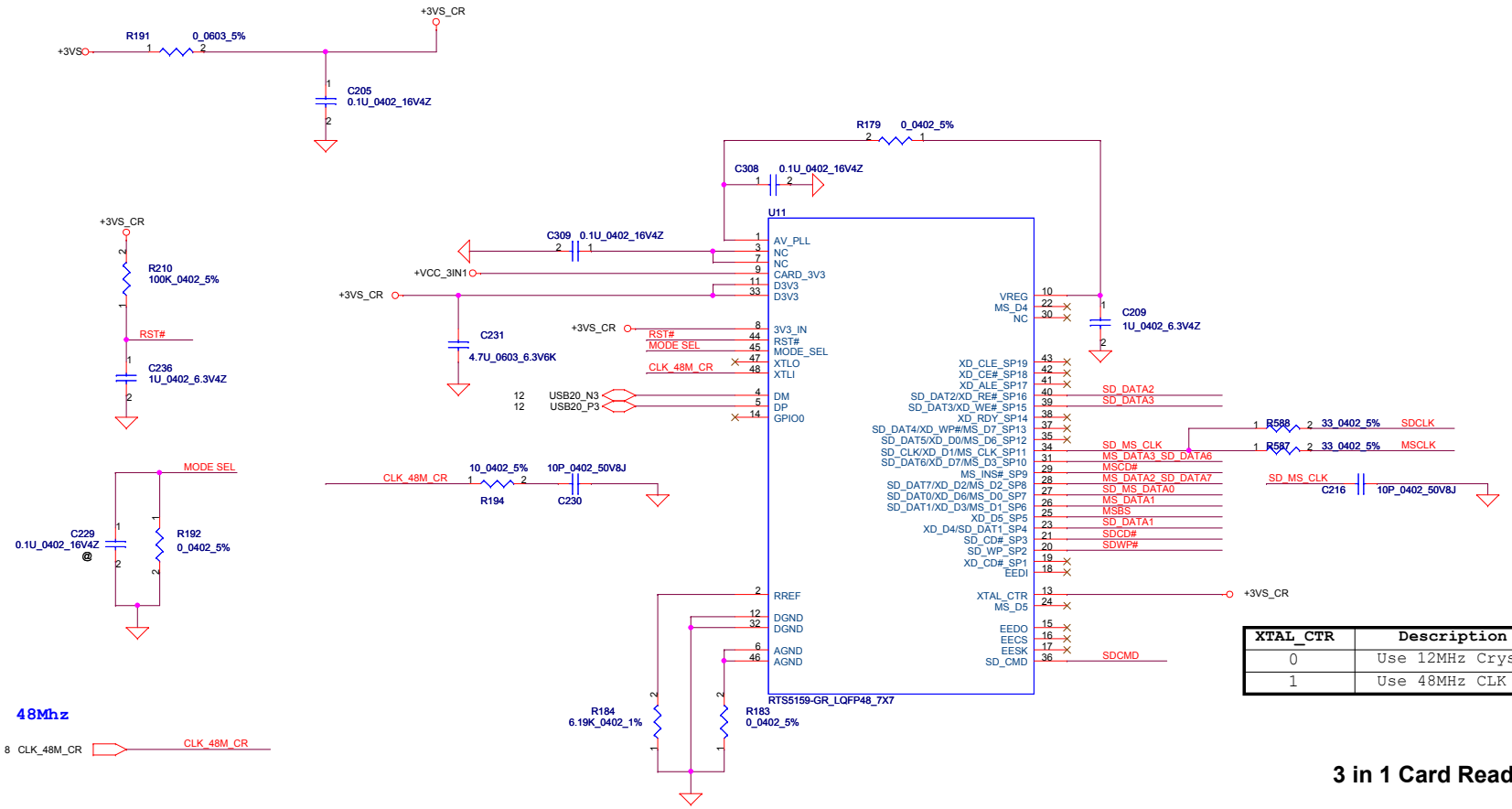

XTAL_CTR	Description
0	Use 12MHz Crystal
1	Use 48MHz CLK Gen

3 in 1 Card Reader

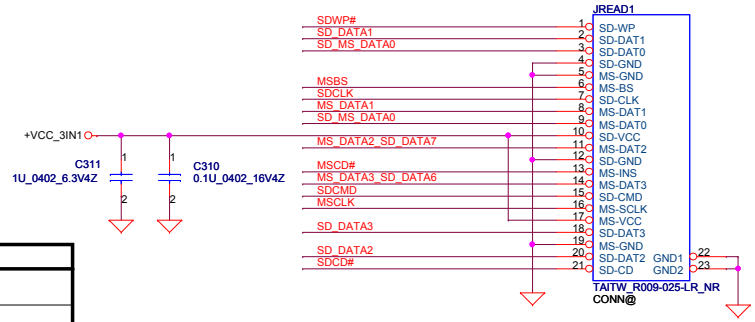

R	C	USB AUTO DE-LINK	MS FORMATTER	Description
0	NC	YES		Recommended
NC	47P	YES	YES	
NC	NC			Compatible with RTS5158E
NC	680P	YES		LED ON
10K	180P			LED ON
10K	680P		YES	

Security Classification	Compal Secret Data		
Issued Date	2009/11/10	Deciphered Date	2010/11/10

THIS SHEET OF ENGINEERING DRAWING IS THE PROPRIETARY PROPERTY OF COMPAL ELECTRONICS, INC. AND CONTAINS CONFIDENTIAL AND TRADE SECRET INFORMATION. THIS SHEET MAY NOT BE TRANSFERED FROM THE CUSTODY OF THE COMPETENT DIVISION OF R&D DEPARTMENT EXCEPT AS AUTHORIZED BY COMPAL ELECTRONICS, INC. NEITHER THIS SHEET NOR THE INFORMATION IT CONTAINS MAY BE USED BY OR DISCLOSED TO ANY THIRD PARTY WITHOUT PRIOR WRITTEN CONSENT OF COMPAL ELECTRONICS, INC.

Compal Electronics, Inc.

Title: RTS5159 Card Reader

Size: Custom | Document Number: NTV00 LA5661P M/B | Rev: 1.0

Date: Thursday, January 07, 2010 | Sheet 21 of 35

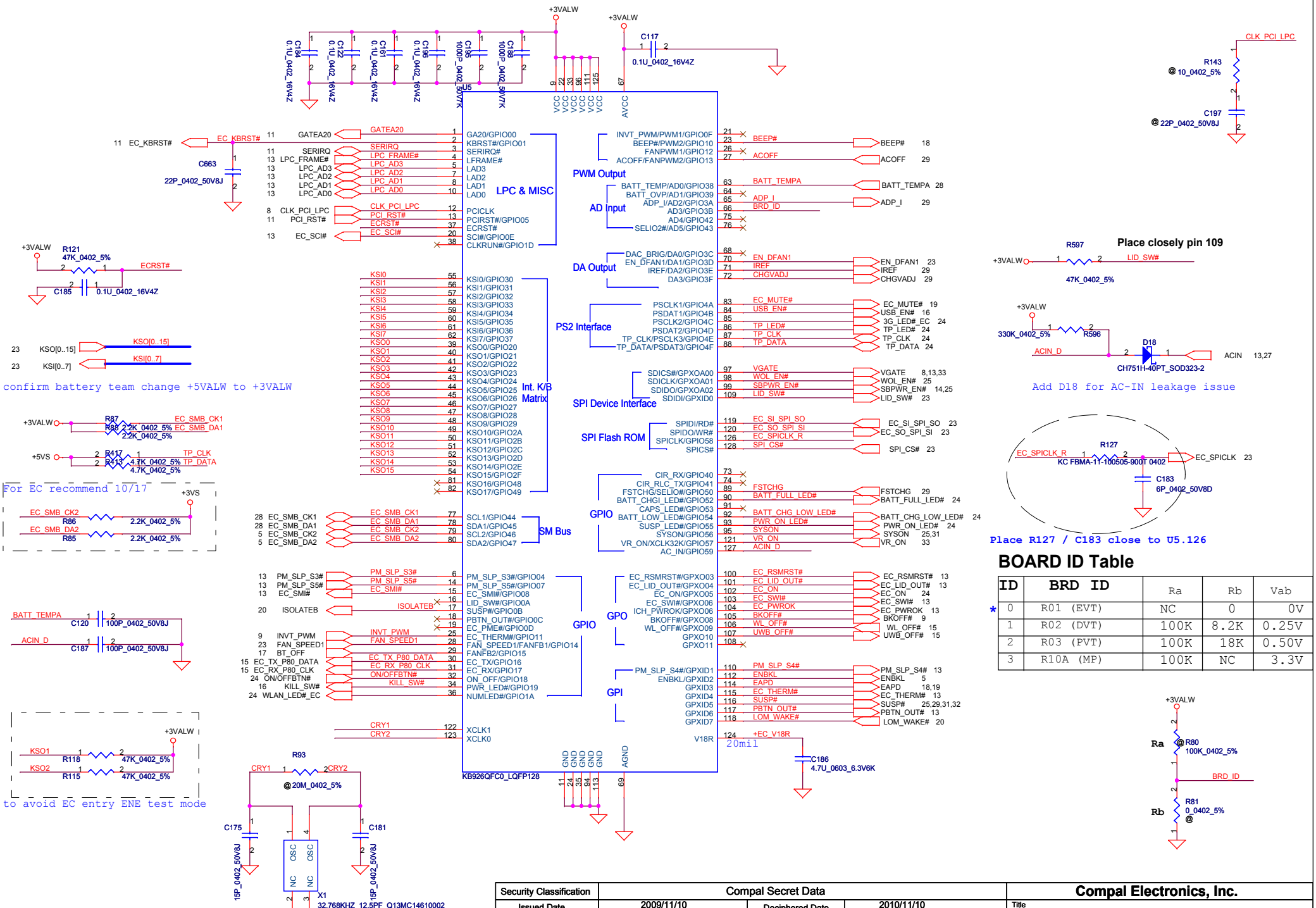

BOARD ID Table

	ID	BRD ID	Ra	Rb	Vab
*	0	R01 (EVT)	NC	0	0V
	1	R02 (DVT)	100K	8.2K	0.25V
	2	R03 (PVT)	100K	18K	0.50V
	3	R10A (MP)	100K	NC	3.3V

Security Classification	Compal Secret Data		
Issued Date	2009/11/10	Deciphered Date	2010/11/10

THIS SHEET OF ENGINEERING DRAWING IS THE PROPRIETARY PROPERTY OF COMPAL ELECTRONICS, INC. AND CONTAINS CONFIDENTIAL AND TRADE SECRET INFORMATION. THIS SHEET MAY NOT BE TRANSFERED FROM THE CUSTODY OF THE COMPETENT DIVISION OF R&D DEPARTMENT EXCEPT AS AUTHORIZED BY COMPAL ELECTRONICS, INC. NEITHER THIS SHEET NOR THE INFORMATION IT CONTAINS MAY BE USED BY OR DISCLOSED TO ANY THIRD PARTY WITHOUT PRIOR WRITTEN CONSENT OF COMPAL ELECTRONICS, INC.

Compal Electronics, Inc.

Title: KB926 D3

Size: Custom | Document Number: NTV00 LA5661P M/B | Rev: 1.0

Date: Thursday, January 07, 2010 | Sheet 22 of 35

FAN Control Circuit

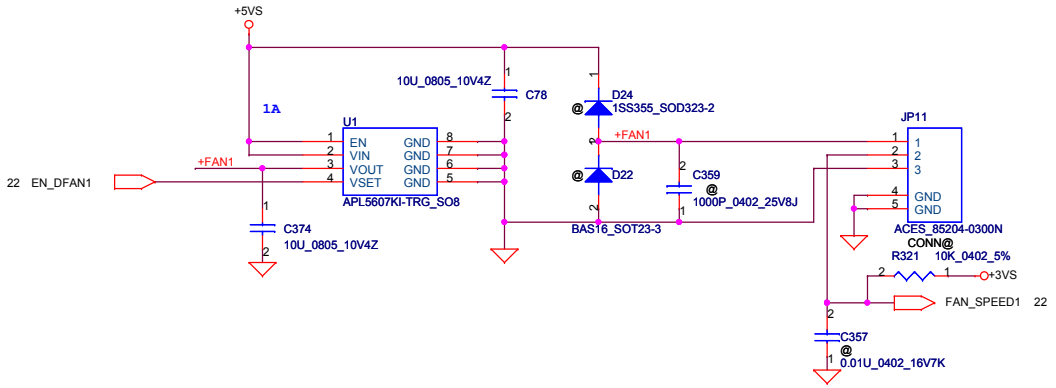

SPI Flash (16Mb*1)

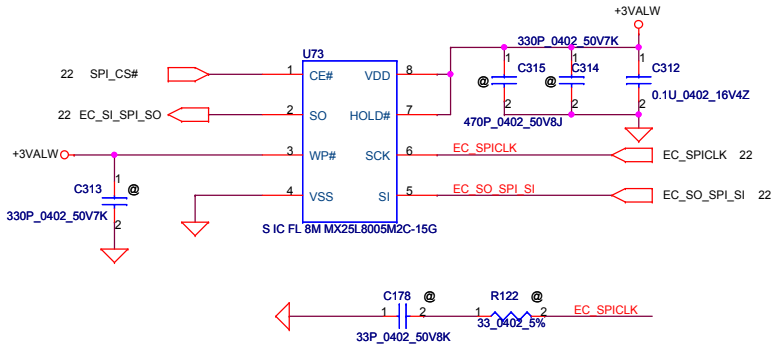

KEYBOARD CONN.

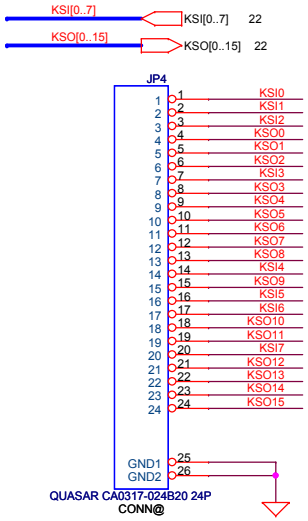

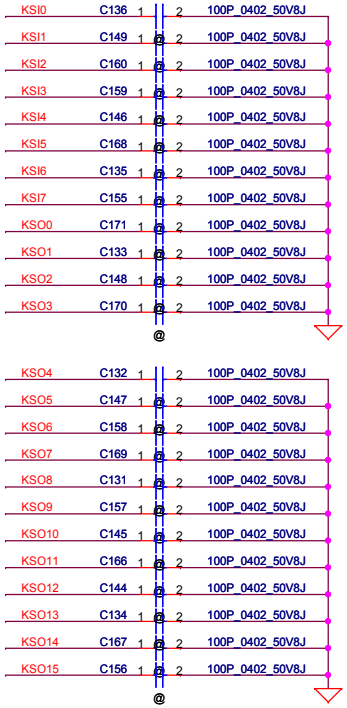

Lid SW

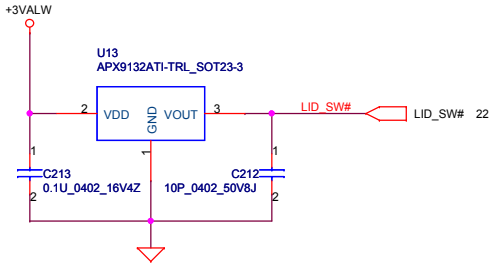

Security Classification	Compal Secret Data		
Issued Date	2009/11/10	Deciphered Date	2010/11/10

THIS SHEET OF ENGINEERING DRAWING IS THE PROPRIETARY PROPERTY OF COMPAL ELECTRONICS, INC. AND CONTAINS CONFIDENTIAL AND TRADE SECRET INFORMATION. THIS SHEET MAY NOT BE TRANSFERED FROM THE CUSTODY OF THE COMPETENT DIVISION OF R&D DEPARTMENT EXCEPT AS AUTHORIZED BY COMPAL ELECTRONICS, INC. NEITHER THIS SHEET NOR THE INFORMATION IT CONTAINS MAY BE USED BY OR DISCLOSED TO ANY THIRD PARTY WITHOUT PRIOR WRITTEN CONSENT OF COMPAL ELECTRONICS, INC.

Title	SPI ROM//KB//FAN/Lid SW	
Size	Document Number: NTV00 LA5661P M/B	Rev 1.0
Date: Thursday, January 07, 2010	Sheet 23 of 35	

Power Button

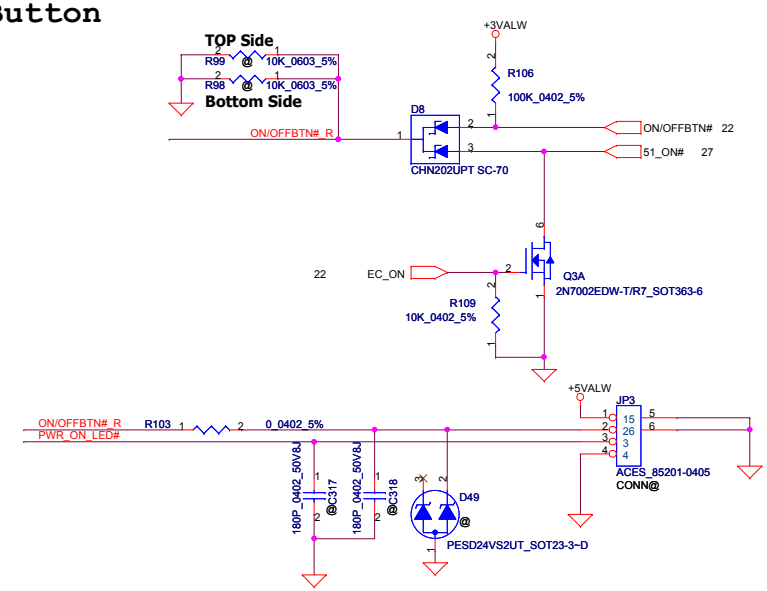

Touch/B Connector

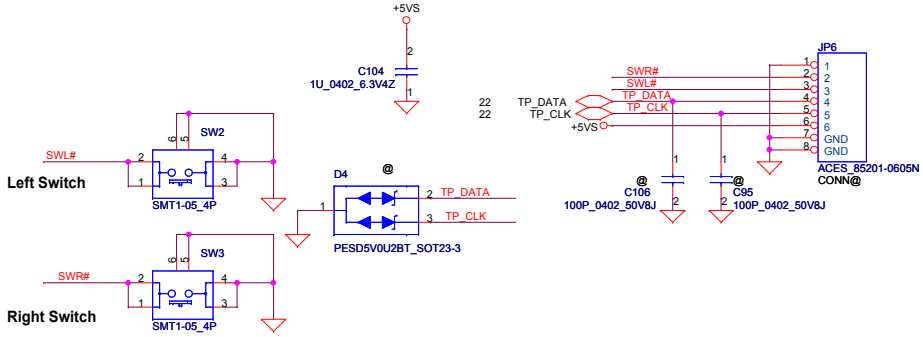

ISPD

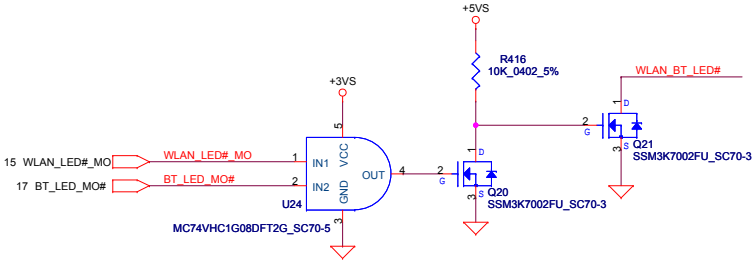

Option control LED

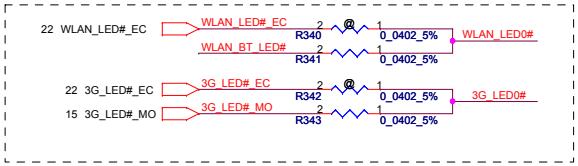

HDD_LED

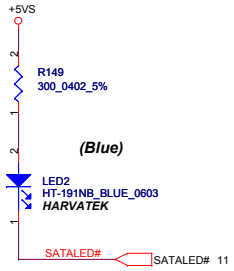

Power_LED

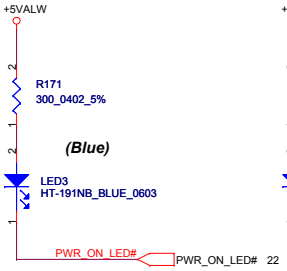

Charge_LED

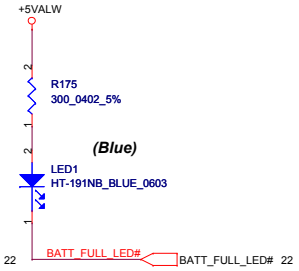

Charge_LED

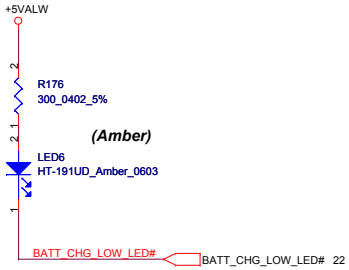

TP_LED

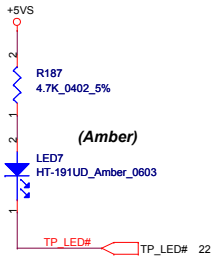

WLAN_LED

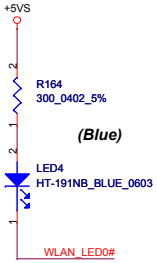

3G_LED

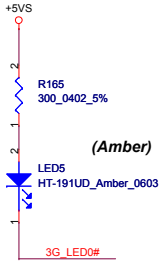

Security Classification	Compal Secret Data		
Issued Date	2009/11/10	Deciphered Date	2010/11/10

THIS SHEET OF ENGINEERING DRAWING IS THE PROPRIETARY PROPERTY OF COMPAL ELECTRONICS, INC. AND CONTAINS CONFIDENTIAL AND TRADE SECRET INFORMATION. THIS SHEET MAY NOT BE TRANSFERED FROM THE CUSTODY OF THE COMPETENT DIVISION OF R&D DEPARTMENT EXCEPT AS AUTHORIZED BY COMPAL ELECTRONICS, INC. NEITHER THIS SHEET NOR THE INFORMATION IT CONTAINS MAY BE USED BY OR DISCLOSED TO ANY THIRD PARTY WITHOUT PRIOR WRITTEN CONSENT OF COMPAL ELECTRONICS, INC.

Compal Electronics, Inc.

Title: ON/OFF /TP Conn/LEDS/ISPD

Size: Custom | Document Number: NTV00 LA5661P M/B | Rev: 1.0

Date: Thursday, January 07, 2010 | Sheet 24 of 35

+3VALW TO +3VS

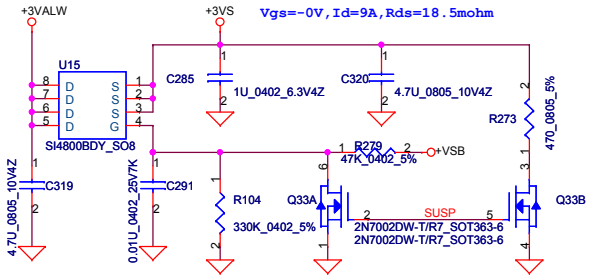

+5VALW TO +5VS

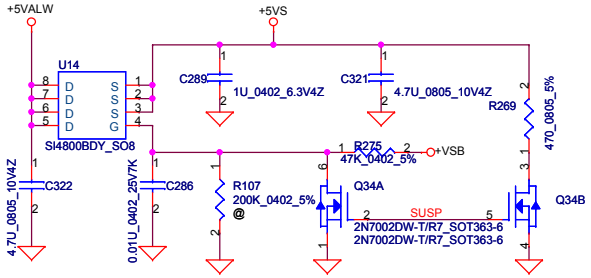

+3VALW TO +3V_LAN

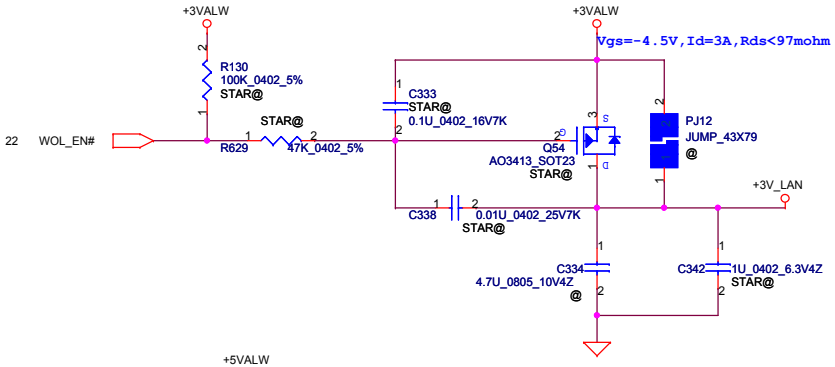

+3VALW TO +3V_SB

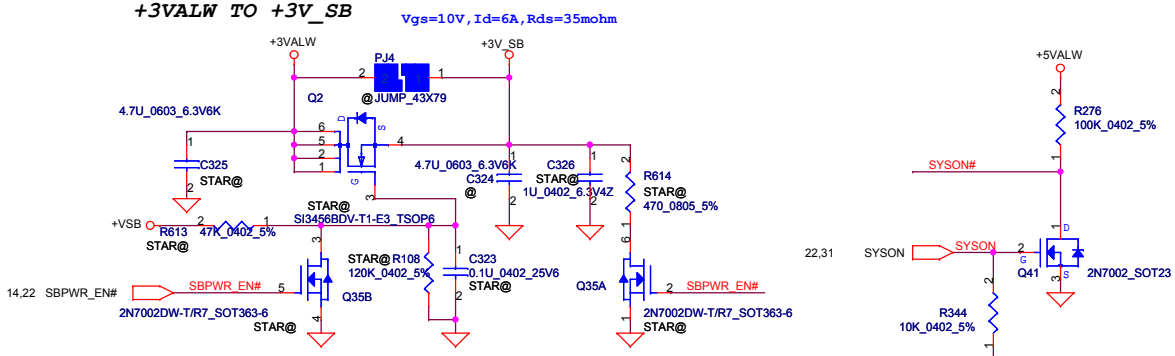

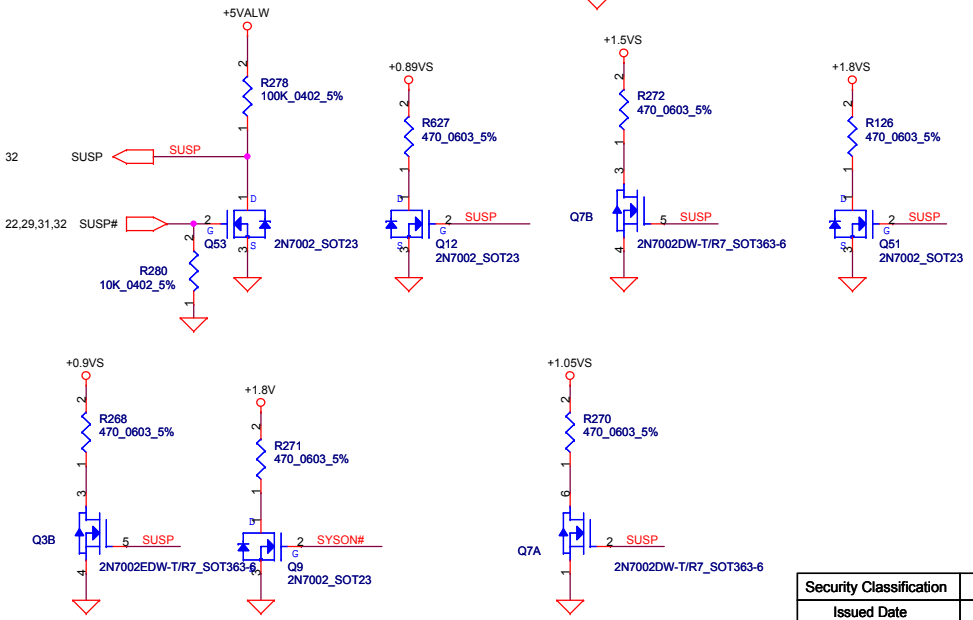

+1.8V TO +1.8VS

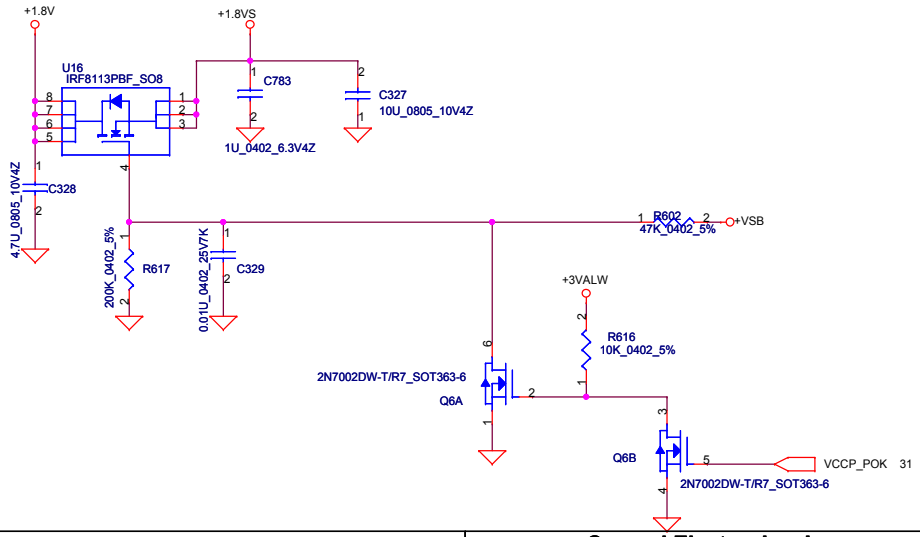

Security Classification	Compal Secret Data		
Issued Date	2009/11/10	Deciphered Date	2010/11/10

THIS SHEET OF ENGINEERING DRAWING IS THE PROPRIETARY PROPERTY OF COMPAL ELECTRONICS, INC. AND CONTAINS CONFIDENTIAL AND TRADE SECRET INFORMATION. THIS SHEET MAY NOT BE TRANSFERED FROM THE CUSTODY OF THE COMPETENT DIVISION OF R&D DEPARTMENT EXCEPT AS AUTHORIZED BY COMPAL ELECTRONICS, INC. NEITHER THIS SHEET NOR THE INFORMATION IT CONTAINS MAY BE USED BY OR DISCLOSED TO ANY THIRD PARTY WITHOUT PRIOR WRITTEN CONSENT OF COMPAL ELECTRONICS, INC.

Compal Electronics, Inc.

Title: DC-DC INTERFACE

Size: Custom | Document Number: NTV00 LA5661P M/B | Rev: 1.0

Date: Thursday, January 07, 2010 | Sheet 25 of 35

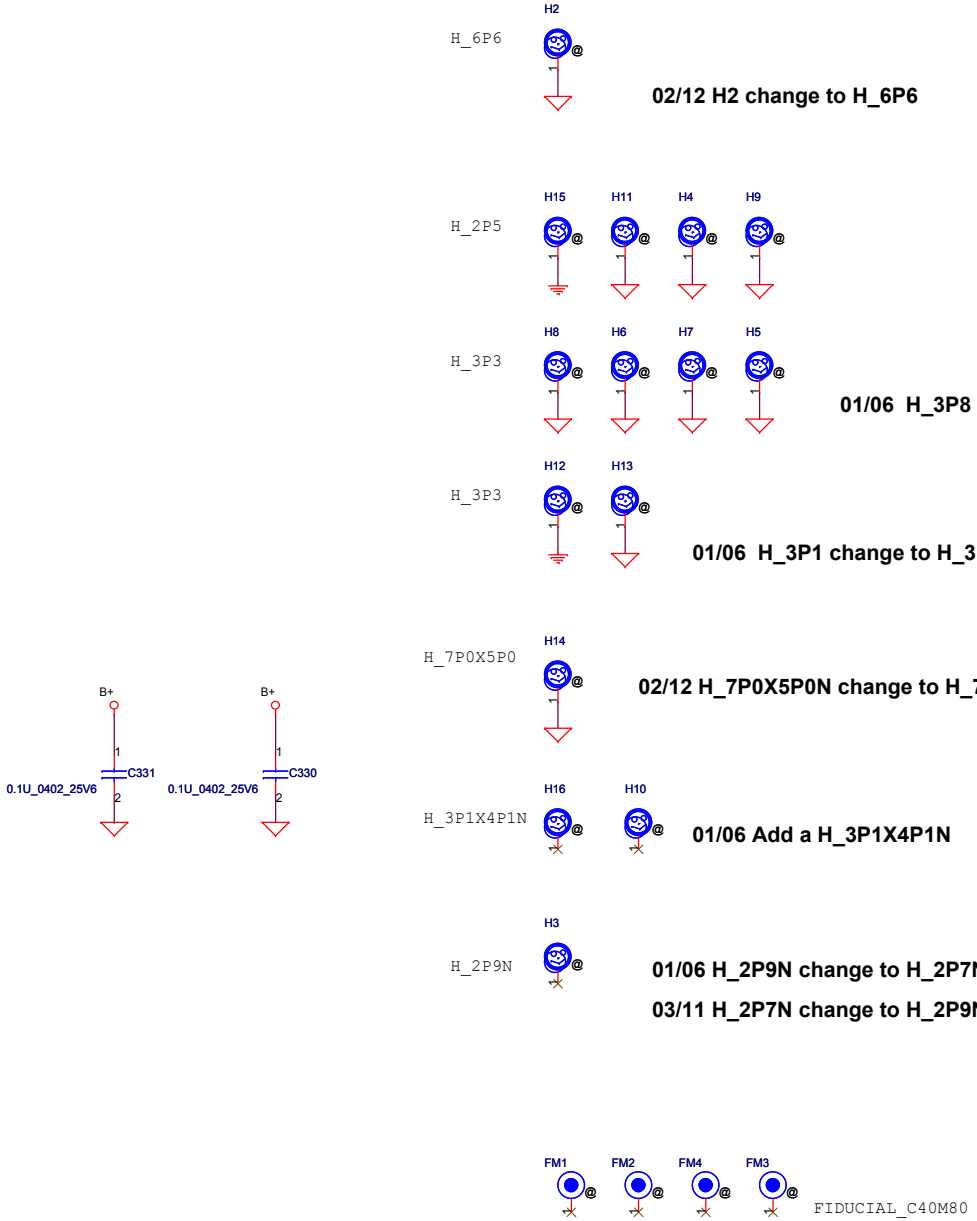

Security Classification	Compal Secret Data		
Issued Date	2009/11/10	Deciphered Date	2010/11/10

THIS SHEET OF ENGINEERING DRAWING IS THE PROPRIETARY PROPERTY OF COMPAL ELECTRONICS, INC. AND CONTAINS CONFIDENTIAL AND TRADE SECRET INFORMATION. THIS SHEET MAY NOT BE TRANSFERED FROM THE CUSTODY OF THE COMPETENT DIVISION OF R&D DEPARTMENT EXCEPT AS AUTHORIZED BY COMPAL ELECTRONICS, INC. NEITHER THIS SHEET NOR THE INFORMATION IT CONTAINS MAY BE USED BY OR DISCLOSED TO ANY THIRD PARTY WITHOUT PRIOR WRITTEN CONSENT OF COMPAL ELECTRONICS, INC.

Compal Electronics, Inc.

Title: DC INTERFACE

Size: Custom | Document Number: NTV00 LA5661P M/B | Rev: 1.0

Date: Thursday, January 07, 2010 | Sheet 26 of 35

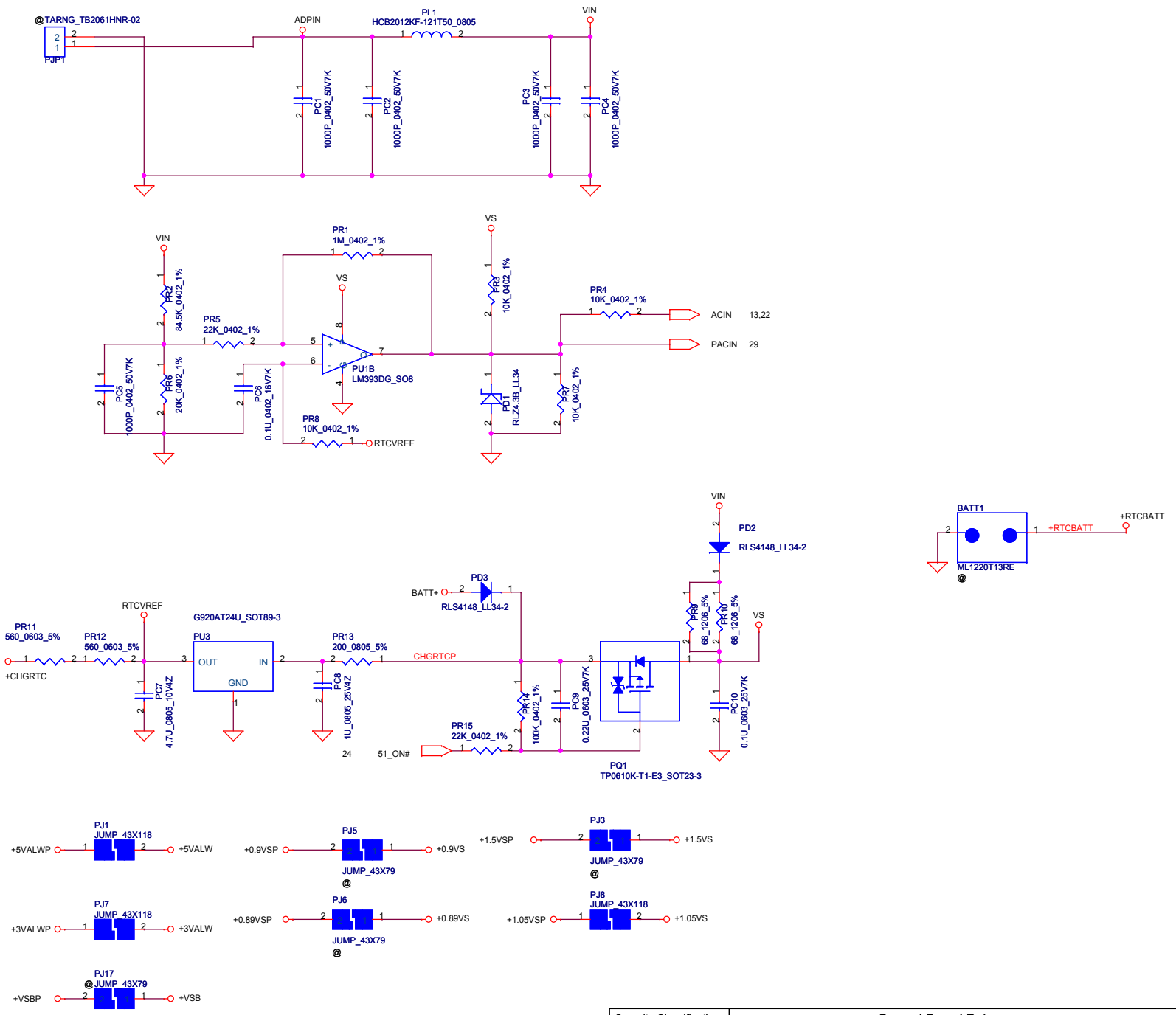

Security Classification	Compal Secret Data		
Issued Date	2009/11/10	Deciphered Date	2010/11/10

THIS SHEET OF ENGINEERING DRAWING IS THE PROPRIETARY PROPERTY OF COMPAL ELECTRONICS, INC. AND CONTAINS CONFIDENTIAL AND TRADE SECRET INFORMATION. THIS SHEET MAY NOT BE TRANSFERED FROM THE CUSTODY OF THE COMPETENT DIVISION OF R&D DEPARTMENT EXCEPT AS AUTHORIZED BY COMPAL ELECTRONICS, INC. NEITHER THIS SHEET NOR THE INFORMATION IT CONTAINS MAY BE USED BY OR DISCLOSED TO ANY THIRD PARTY WITHOUT PRIOR WRITTEN CONSENT OF COMPAL ELECTRONICS, INC.

Compal Electronics, Inc.

Title: **DCIN/DETECTOR**

Size: Custom | Document Number: NTV00 LA5661P M/B | Rev: 1.0

Date: Thursday, January 07, 2010 | Sheet 27 of 35

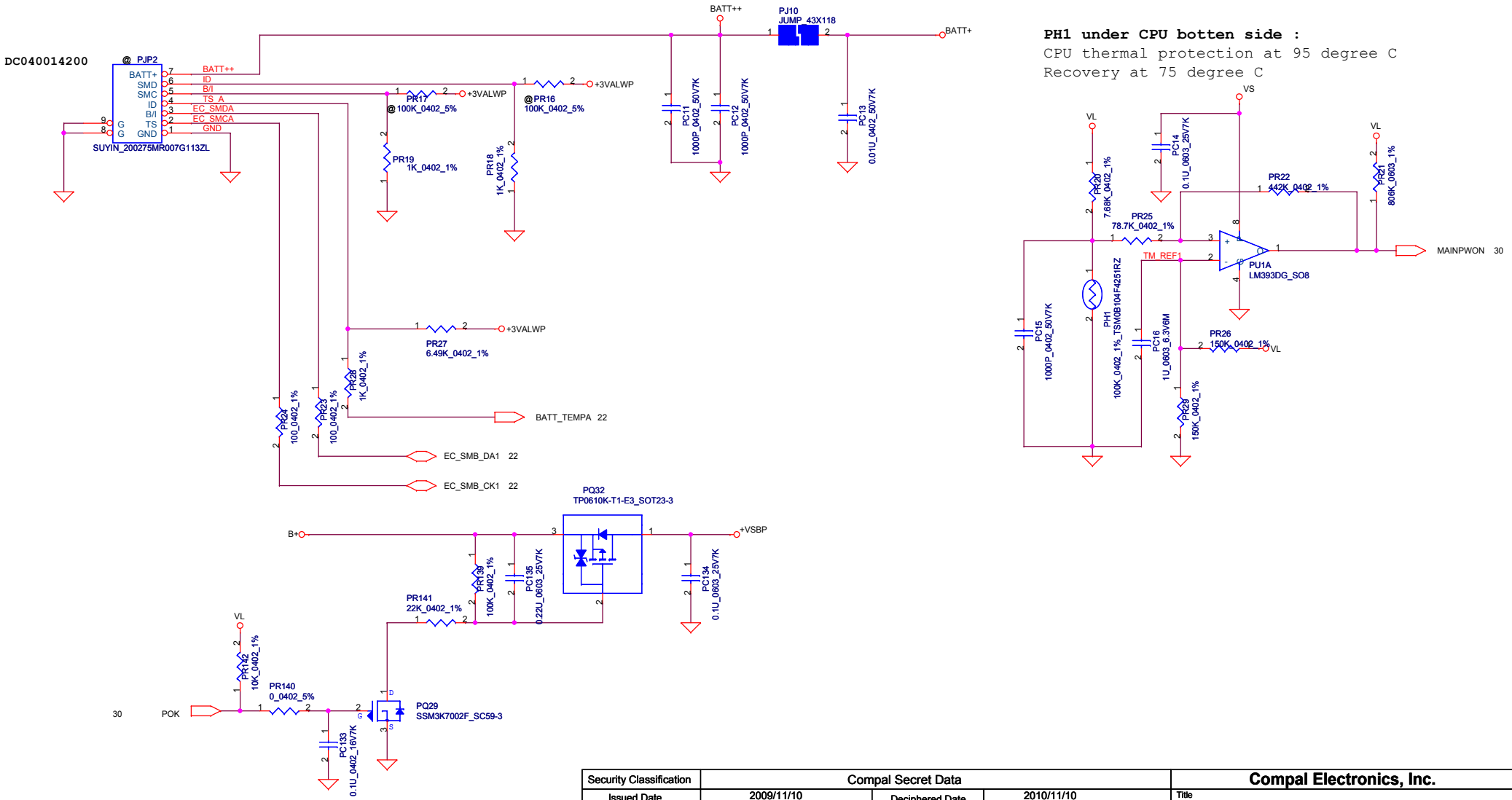

Security Classification	Compal Secret Data		
Issued Date	2009/11/10	Deciphered Date	2010/11/10

THIS SHEET OF ENGINEERING DRAWING IS THE PROPRIETARY PROPERTY OF COMPAL ELECTRONICS, INC. AND CONTAINS CONFIDENTIAL AND TRADE SECRET INFORMATION. THIS SHEET MAY NOT BE TRANSFERED FROM THE CUSTODY OF THE COMPETENT DIVISION OF R&D DEPARTMENT EXCEPT AS AUTHORIZED BY COMPAL ELECTRONICS, INC. NEITHER THIS SHEET NOR THE INFORMATION IT CONTAINS MAY BE USED BY OR DISCLOSED TO ANY THIRD PARTY WITHOUT PRIOR WRITTEN CONSENT OF COMPAL ELECTRONICS, INC.

Compal Electronics, Inc.

Title: **BATTERY CONN. / OTP**

Size: Custom | Document Number: NTV00 LA5661P M/B | Rev: 1.0

Date: Thursday, January 07, 2010 | Sheet 28 of 35

30W, Iadapter=0~1.57A, Current sense=0.015ohm, CP=1.328A

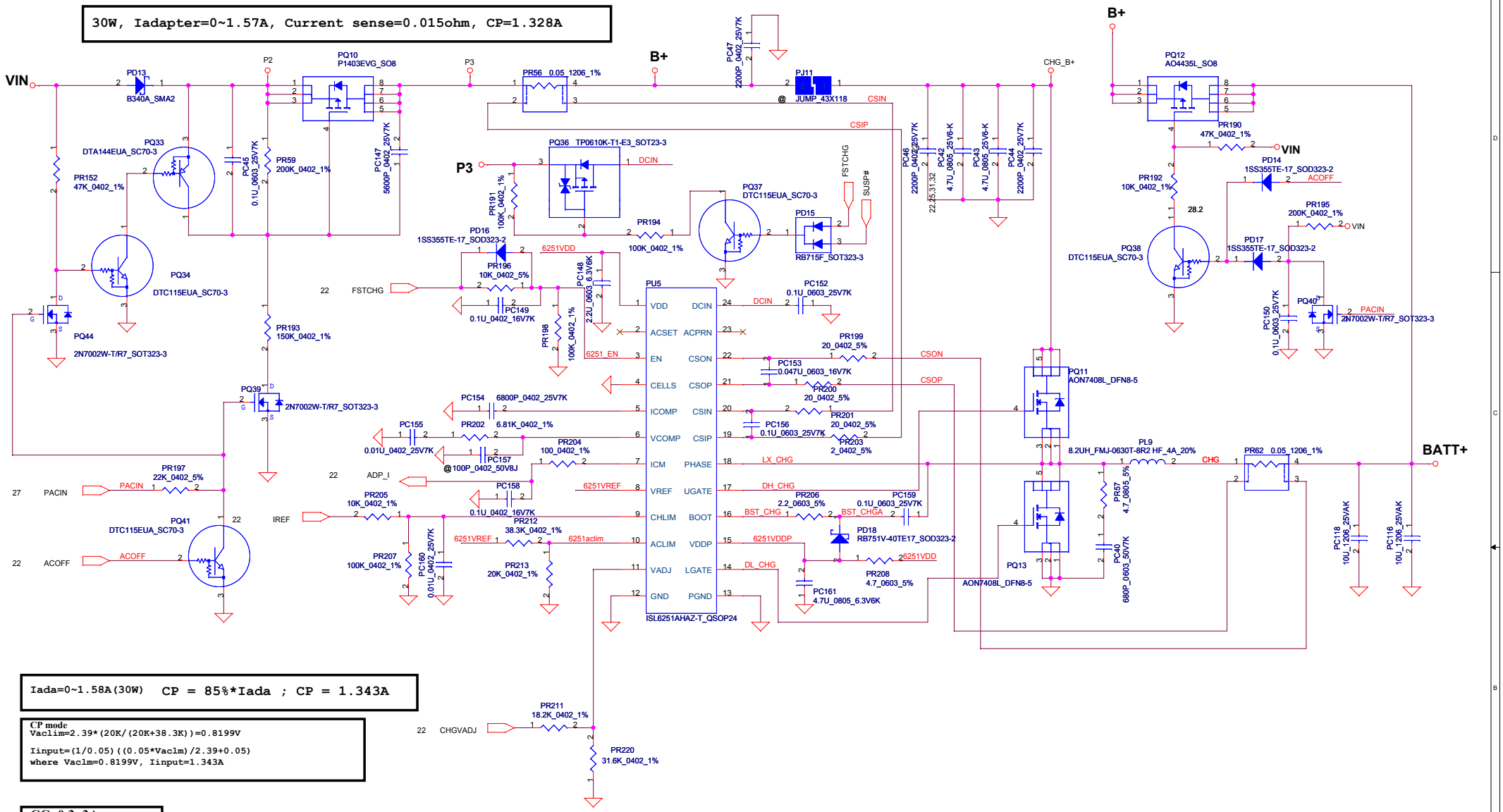

Iada=0~1.58A(30W) CP = 85%*Iada ; CP = 1.343A

CP mode
Vaclim=2.39*(20K/(20K+38.3K))=0.8199V

Iinput=(1/0.05)((0.05*Vaclm)/2.39+0.05)
where Vaclm=0.8199V, Iinput=1.343A

CC=0.3~3A
IREF=1.1*Icharge
IREF=0.33V~3.3V

BATT Type	Charging Voltage (0x15)	CV mode
Normal 3S LI-ON Cells	12600mV	12.60V

VADJ-->VREF-->4.41V

VADJ--->Ground--->3.39V

Vcell=(0.175*VADJ+3.99)

Security Classification	Compal Secret Data		
Issued Date	2009/11/10	Deciphered Date	2010/11/10

THIS SHEET OF ENGINEERING DRAWING IS THE PROPRIETARY PROPERTY OF COMPAL ELECTRONICS, INC. AND CONTAINS CONFIDENTIAL AND TRADE SECRET INFORMATION. THIS SHEET MAY NOT BE TRANSFERED FROM THE CUSTODY OF THE COMPETENT DIVISION OF R&D DEPARTMENT EXCEPT AS AUTHORIZED BY COMPAL ELECTRONICS, INC. NEITHER THIS SHEET NOR THE INFORMATION IT CONTAINS MAY BE USED BY OR DISCLOSED TO ANY THIRD PARTY WITHOUT PRIOR WRITTEN CONSENT OF COMPAL ELECTRONICS, INC.

Compal Electronics, Inc.

Title: CHARGER

Size | Document Number: NTV00 LA5661P M/B | Rev: 1.0

Date: Thursday, January 07, 2010 | Sheet 29 of 35

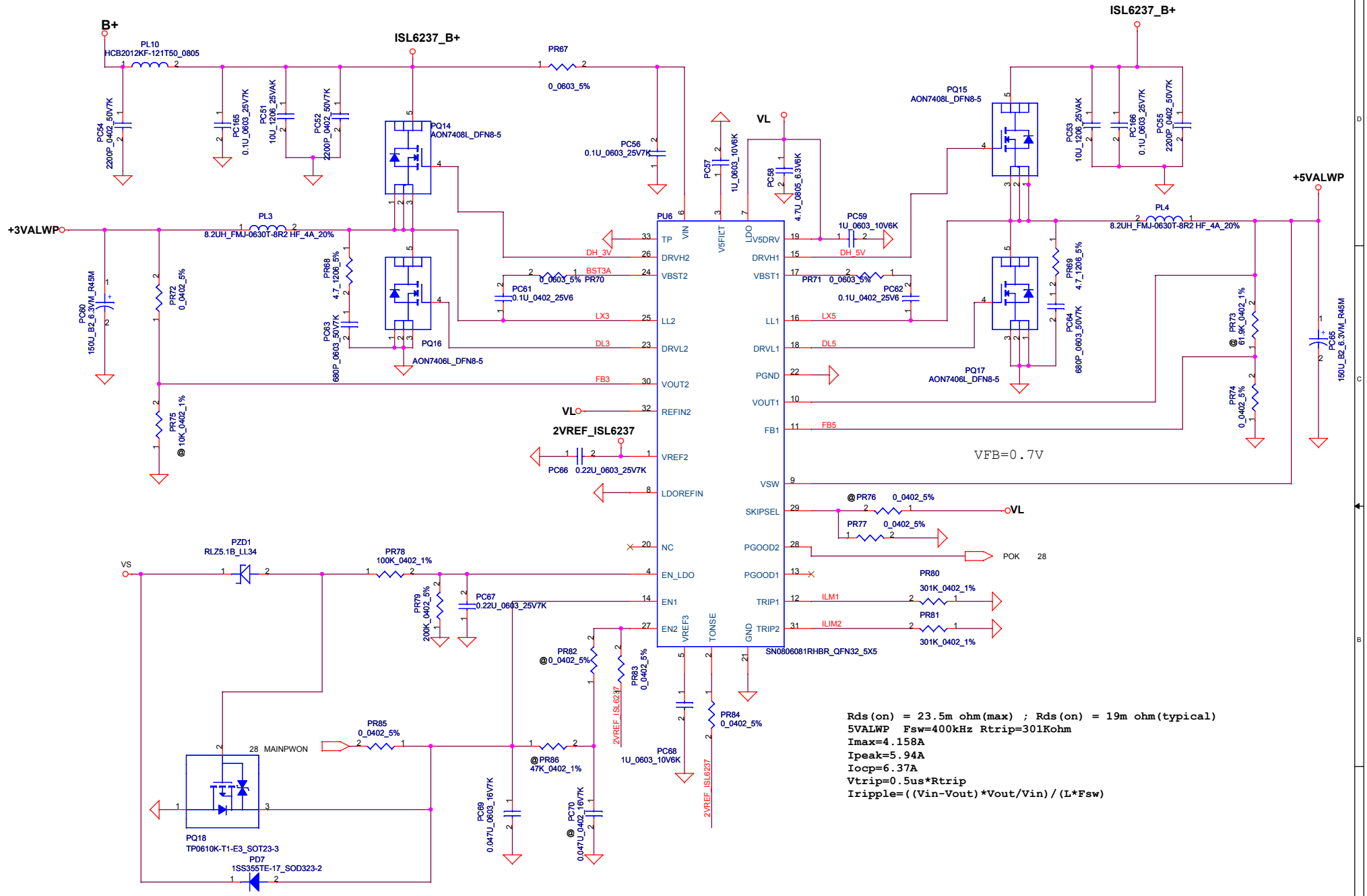

Rds(on) = 23.5m ohm(max) ; Rds(on) = 19m ohm(typical)
5VALWP Fsw=400kHz Rtrip=301Kohm
Imax=4.158A
Ipeak=5.94A
Iocp=6.37A
Vtrip=0.5us*Rtrip
Iripple=((Vin-Vout)*Vout/Vin)/(L*Fsw)

Rds(on) = 23.5m ohm(max) ; Rds(on) = 19m ohm(typical)
3.3VALWP Fsw=300kHz Rtrip=301K
Imax=4.319A
Ipeak=6.17A
Iocp=6.43A
Vtrip=0.5us*Rtrip
Iripple=((Vin-Vout)*Vout/Vin)/(L*Fsw)

Security Classification	Compal Secret Data		
Issued Date	2009/11/10	Deciphered Date	2010/11/10

THIS SHEET OF ENGINEERING DRAWING IS THE PROPRIETARY PROPERTY OF COMPAL ELECTRONICS, INC. AND CONTAINS CONFIDENTIAL AND TRADE SECRET INFORMATION. THIS SHEET MAY NOT BE TRANSFERED FROM THE CUSTODY OF THE COMPETENT DIVISION OF R&D DEPARTMENT EXCEPT AS AUTHORIZED BY COMPAL ELECTRONICS, INC. NEITHER THIS SHEET NOR THE INFORMATION IT CONTAINS MAY BE USED BY OR DISCLOSED TO ANY THIRD PARTY WITHOUT PRIOR WRITTEN CONSENT OF COMPAL ELECTRONICS, INC.

Compal Electronics, Inc.

Title: **+5VALWP/+3VALWP**

Size: Custom | Document Number: NTV00 LA5661P M/B | Rev: 1.0

Date: Thursday, January 07, 2010 | Sheet 30 of 35

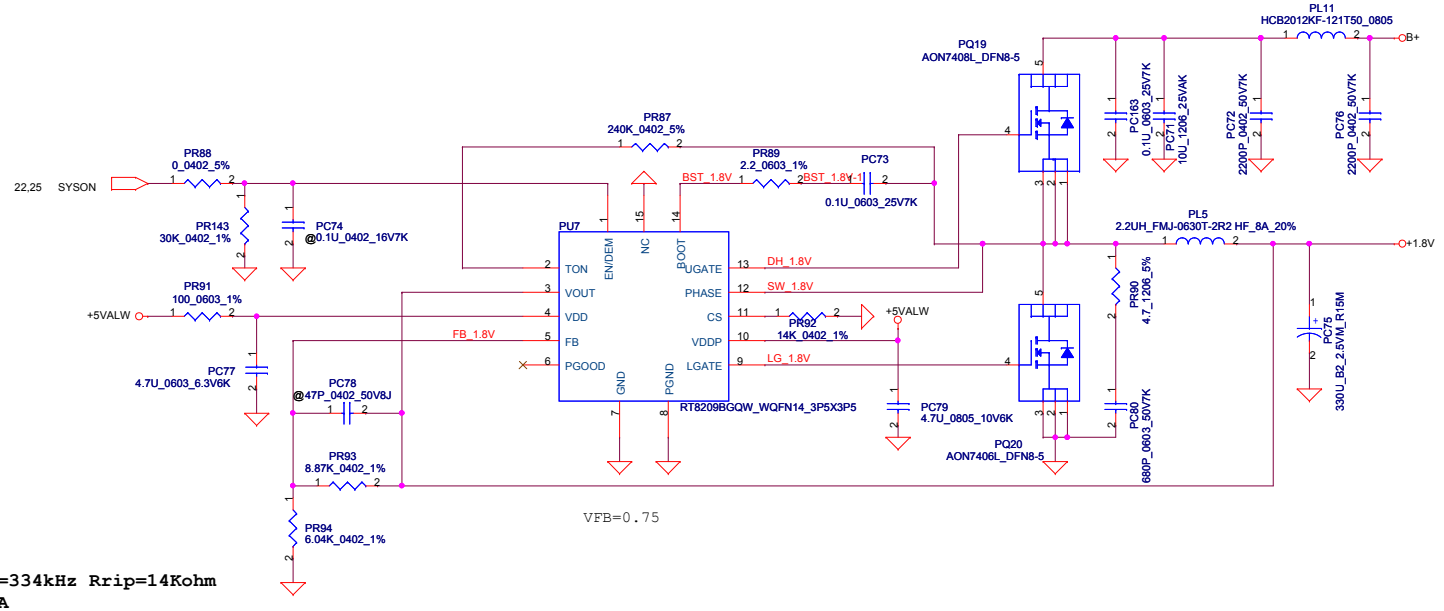

1.8VP Fsw=334kHz Rrip=14Kohm
Imax=2.464A
Ipeak=3.52A
Iocp=6.37A
Vtrip=10uA*Rtrip
Iripple=((Vin-Vout)*Vout/Vin)/(L*Fsw)

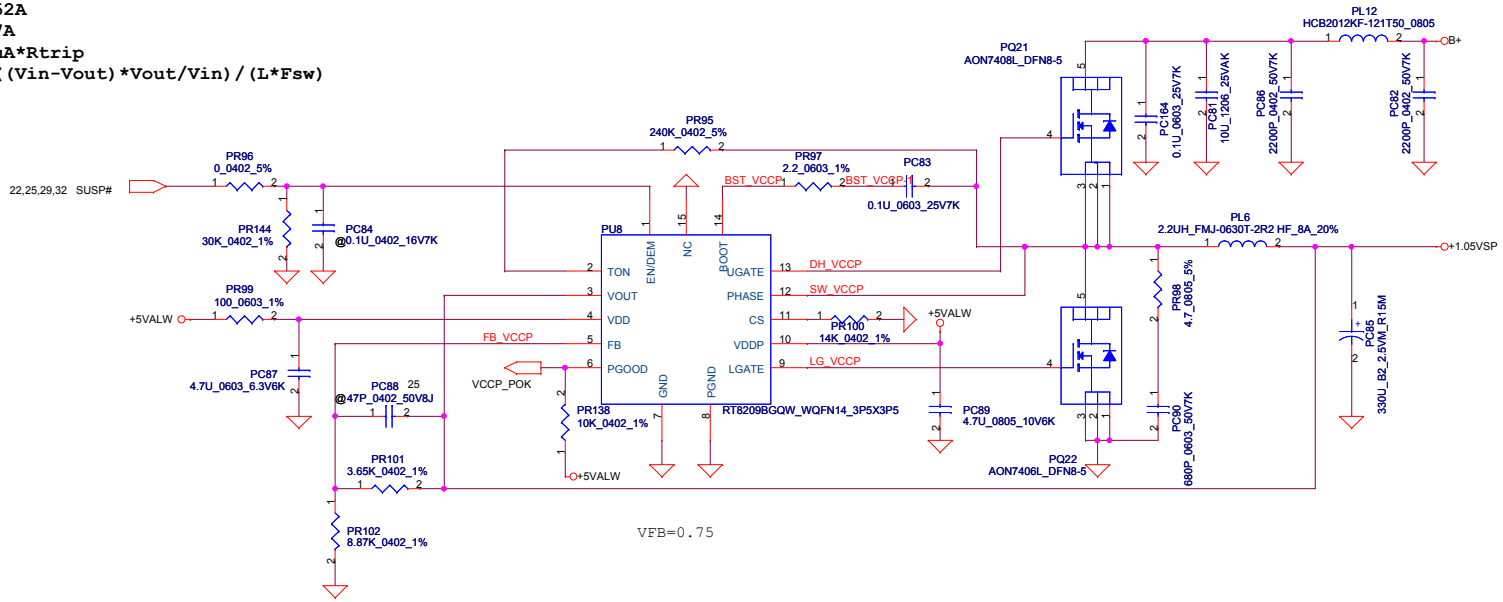

VCCPP(1.05V) Fsw=338kHz Rtrip=14Kohm
Imax=2.4493A
Ipeak=3.499A
Iocp=6.01A
Vtrip=10uA*Rtrip
Iripple=((Vin-Vout)*Vout/Vin)/(L*Fsw)

Security Classification	Compal Secret Data			Compal Electronics, Inc.
Issued Date	2009/11/10	Deciphered Date	2010/11/10	Title: 1.05VP/1.8VP
				Size: Custom; Document Number: NTV00 LA5661P M/B; Rev: 1.0
				Date: Thursday, January 07, 2010; Sheet 31 of 35

THIS SHEET OF ENGINEERING DRAWING IS THE PROPRIETARY PROPERTY OF COMPAL ELECTRONICS, INC. AND CONTAINS CONFIDENTIAL AND TRADE SECRET INFORMATION. THIS SHEET MAY NOT BE TRANSFERED FROM THE CUSTODY OF THE COMPETENT DIVISION OF R&D DEPARTMENT EXCEPT AS AUTHORIZED BY COMPAL ELECTRONICS, INC. NEITHER THIS SHEET NOR THE INFORMATION IT CONTAINS MAY BE USED BY OR DISCLOSED TO ANY THIRD PARTY WITHOUT PRIOR WRITTEN CONSENT OF COMPAL ELECTRONICS, INC.

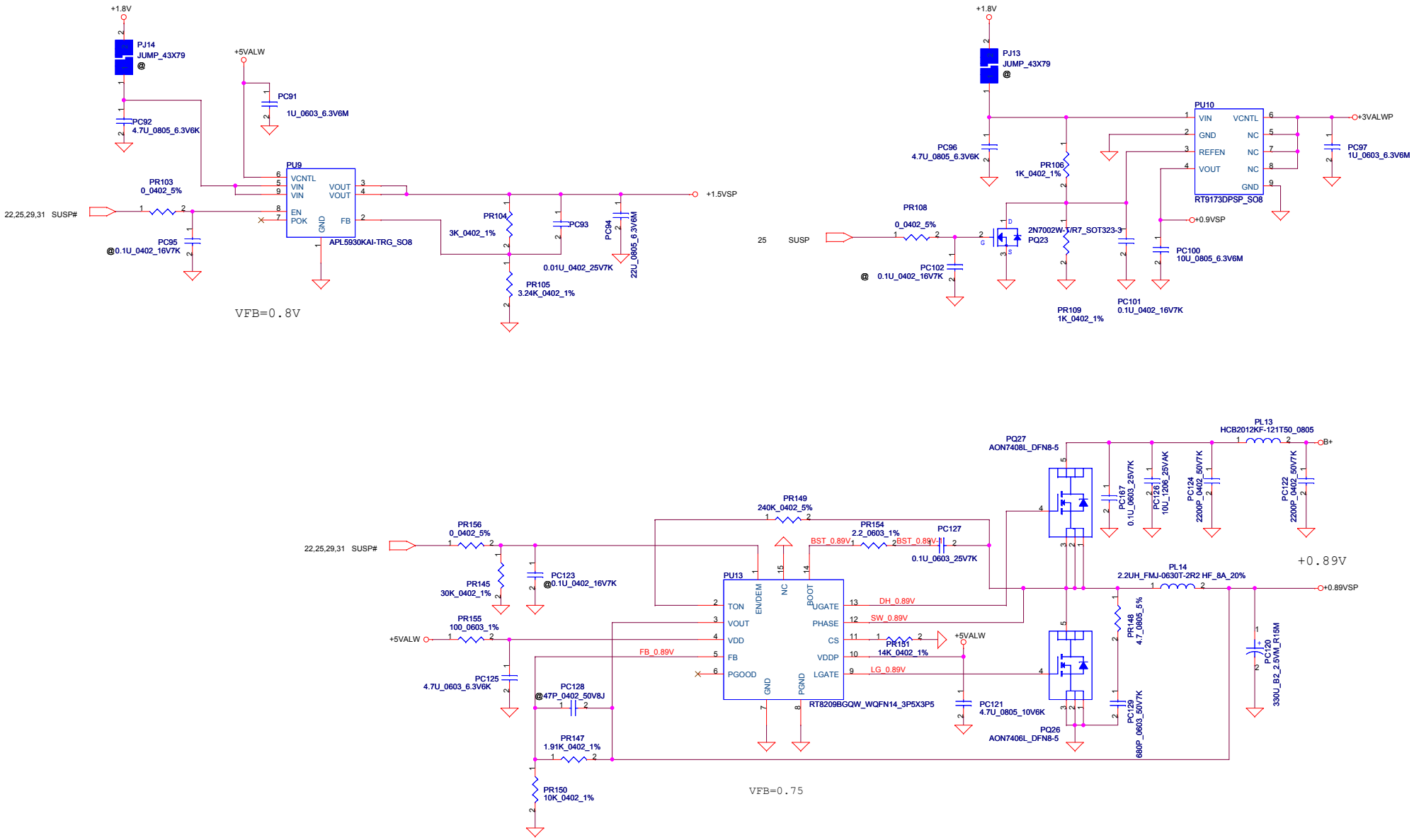

0.89VP Fsw=339kHz Rrip=14Kohm
Imax=1.848A
Ipeak=2.64A
Iocp=5.92A
Vtrip=10uA*Rtrip
Iripple=((Vin-Vout)*Vout/Vin)/(L*Fsw)

Security Classification	Compal Secret Data			Compal Electronics, Inc.
Issued Date	2009/11/10	Deciphered Date	2010/11/10	Title: 2.5VSP/0.9VSP/1.5VSP
THIS SHEET OF ENGINEERING DRAWING IS THE PROPRIETARY PROPERTY OF COMPAL ELECTRONICS, INC. AND CONTAINS CONFIDENTIAL AND TRADE SECRET INFORMATION. THIS SHEET MAY NOT BE TRANSFERED FROM THE CUSTODY OF THE COMPETENT DIVISION OF R&D DEPARTMENT EXCEPT AS AUTHORIZED BY COMPAL ELECTRONICS, INC. NEITHER THIS SHEET NOR THE INFORMATION IT CONTAINS MAY BE USED BY OR DISCLOSED TO ANY THIRD PARTY WITHOUT PRIOR WRITTEN CONSENT OF COMPAL ELECTRONICS, INC.				Size: Custom; Document Number: NTV00 LA5661P M/B; Rev: 1.0
				Date: Thursday, January 07, 2010; Sheet 32 of 35

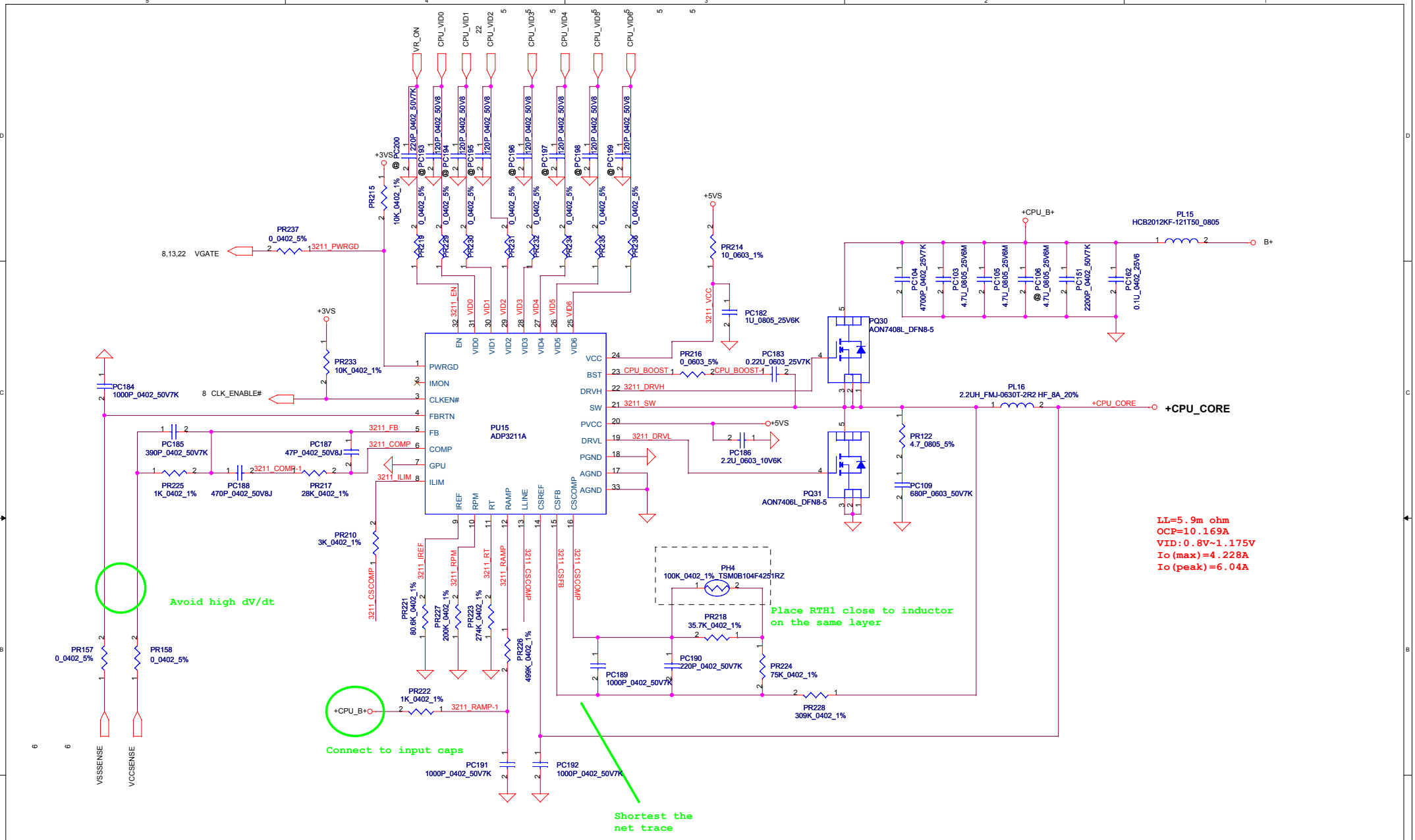

Security Classification	Compal Secret Data		
Issued Date	2009/11/10	Deciphered Date	2010/11/10

THIS SHEET OF ENGINEERING DRAWING IS THE PROPRIETARY PROPERTY OF COMPAL ELECTRONICS, INC. AND CONTAINS CONFIDENTIAL AND TRADE SECRET INFORMATION. THIS SHEET MAY NOT BE TRANSFERED FROM THE CUSTODY OF THE COMPETENT DIVISION OF R&D DEPARTMENT EXCEPT AS AUTHORIZED BY COMPAL ELECTRONICS, INC. NEITHER THIS SHEET NOR THE INFORMATION IT CONTAINS MAY BE USED BY OR DISCLOSED TO ANY THIRD PARTY WITHOUT PRIOR WRITTEN CONSENT OF COMPAL ELECTRONICS, INC.

Compal Electronics, Inc.

Title: **+CPU_CORE**

Size	Document Number	Rev
Custom	NTV00 LA5661P M/B	1.0

Date: Thursday, January 07, 2010 | Sheet 33 of 35

Page	Reason for change	Modify list
EVT-2	Change PC77,PC87,PC125 from 10V to 6.3V	
	Add PR233 for enable ClK_GEN by HW request	
	Add snubber for EMI request	Add PR57, PC40, PR68, PC63, PR69, PC64, Add PR90, PC80, PR98, PC90, PR148, PC129, PR122, PC109
	Change CPU OCP from 6A to 9A, PR210 from 1.8K to 2.61K	Change PR210 from 1.8K to 2.61K
	Change PC77, PC87, PC125 from 10V to 6.3V for standard part	
DVT	Romve BattOVP function, EC support	Del PU4, PC115,PC117,PR138,PR139,PR140,PR141
	Combine OTP to LM393	DEL PD5
	Change OTP from 89 to 92 degree for thermal request	Change PR20 from 10K to 8.87K
	Change PL15 to common part	
PVT	shortage in factory	Change PC9,PC135 from 0.22U_1206 to 0.22U_0603 Change PC42,PC43 from 0.22U_1206 to 0.22U_0805 Change PC66 from 0.22U_0603_10V7K to 0.22U_0603_25V7K
	HW request	Add B+>>+VSB circuit and +VSB jump Add PGOOD circuit in PU8
	change net name	change CLK_EN# to CLK_ENABLE#, +VCCPP to +1.05VSP, +VCCP to +1.05VS, SPOK to POK, BATT_TEMP to BATT_TEMPA
	cost consideration	change PU7,PU8,PU13 from TPS51117RGYR to RT8209BGQW
	prevent noise coupling	change PR101 13.7k to 3.65k and PR102 31.6k to 8.87k change PR93 30.1k to 8.87k and PR94 20.5k to 6.04k change PR147 5.9k to 1.91k and PR94 31.6k to 10k
	prevent floating	Add 30K resistance between EN pin and GND in PU7,8,13
	adjust sequence	change PR21 from 100K to 806K
	HW circuit request	change page-off connector to port
	OCP modify for power budget	change PR80,81 from 210K to 270K and PR92 from 14.7K to 10K and PR210 from 2.61K to 3K
	cost consideration	take off PC98 and CPU_CORE jump
PreMP	increase OTP setting point	change PR20 from 8.87K to 7.68K

Security Classification	Compal Secret Data		
Issued Date	2009/11/10	Deciphered Date	2010/11/10

THIS SHEET OF ENGINEERING DRAWING IS THE PROPRIETARY PROPERTY OF COMPAL ELECTRONICS, INC. AND CONTAINS CONFIDENTIAL AND TRADE SECRET INFORMATION. THIS SHEET MAY NOT BE TRANSFERED FROM THE CUSTODY OF THE COMPETENT DIVISION OF R&D DEPARTMENT EXCEPT AS AUTHORIZED BY COMPAL ELECTRONICS, INC. NEITHER THIS SHEET NOR THE INFORMATION IT CONTAINS MAY BE USED BY OR DISCLOSED TO ANY THIRD PARTY WITHOUT PRIOR WRITTEN CONSENT OF COMPAL ELECTRONICS, INC.

PIR (Product Improve Record)

SCHEMATIC CHANGE LIST
REVISION CHANGE: 0.4

NO	DATE	PAGE	MODIFICATION LIST	PURPOSE
1	12/02	6	Change C278 footprint from B2 to D2	Cost down
2	12/02	5	Add R193,R221,R209,R214,R218,R224 closed to Processor Pin	EMI request
3	12/03	14	Remove R562 let +VCC1_5 connect to +1.5VS directly	Layout shape non-enough
4	12/03	7	Add C589,C46,C559,C610,C41,C547,C344,C628,C542	Layout signal dirty
5	12/03	13	Add C665,C666,C667	Layout signal dirty
6	12/03	15	Add C668,C669	Layout signal dirty
7	12/08	6	Change C278 PN to SGA00001Q80	Power request

SCHEMATIC CHANGE LIST
REVISION CHANGE: 1.0

NO	DATE	PAGE	MODIFICATION LIST	PURPOSE
1	12/28	13	Change BT_OFF to EC Pin29	Leverage DVT
2	12/28	14	R47 reserve	BOM change
3	12/28	13	C408 reserve	BOM change
4	12/28	16	C747 reserve	BOM change
5	12/28	23	Change U73 PN to SA00000XT00	BIOS request
6	12/28	22	Change RP17 to R87,R88,R413,R417	EC request

Security Classification	Compal Secret Data		
Issued Date	2009/11/10	Deciphered Date	2010/11/10

THIS SHEET OF ENGINEERING DRAWING IS THE PROPRIETARY PROPERTY OF COMPAL ELECTRONICS, INC. AND CONTAINS CONFIDENTIAL AND TRADE SECRET INFORMATION. THIS SHEET MAY NOT BE TRANSFERED FROM THE CUSTODY OF THE COMPETENT DIVISION OF R&D DEPARTMENT EXCEPT AS AUTHORIZED BY COMPAL ELECTRONICS, INC. NEITHER THIS SHEET NOR THE INFORMATION IT CONTAINS MAY BE USED BY OR DISCLOSED TO ANY THIRD PARTY WITHOUT PRIOR WRITTEN CONSENT OF COMPAL ELECTRONICS, INC.

Compal Electronics, Inc.

Title	PIR	
Size	Document Number: NTV00 LA5961P M/B	Rev 1.0
Date: Thursday, January 07, 2010	Sheet 35 of 35	

www.s-manuals.com