淘本本
TBenBen.com

Compal confidential

JBK00 LA-4092P Schematics Document

Mobile AMD S1G2 CPU with ATI RX781 & SB700 core logic with M82-S

2008-02-20

REV:0.4

機密	等級	硬體二部
		產出人員
		產出日期
		解密日期

Security Classification	Compal Secret Data		
Issued Date	2007/08/02	Deciphered Date	2008/08/02

THIS SHEET OF ENGINEERING DRAWING IS THE PROPRIETARY PROPERTY OF COMPAL ELECTRONICS, INC. AND CONTAINS CONFIDENTIAL AND TRADE SECRET INFORMATION. THIS SHEET MAY NOT BE TRANSFERED FROM THE CUSTODY OF THE COMPETENT DIVISION OF R&D DEPARTMENT EXCEPT AS AUTHORIZED BY COMPAL ELECTRONICS, INC. NEITHER THIS SHEET NOR THE INFORMATION IT CONTAINS MAY BE USED BY OR DISCLOSED TO ANY THIRD PARTY WITHOUT PRIOR WRITTEN CONSENT OF COMPAL ELECTRONICS, INC.

Compal Electronics, Inc.			
Title: Cover Sheet			
Size: Custom	Document Number: LA-4092P		Rev: 0.4
Date: Thursday, February 21, 2008	Sheet 1 of 53		

Compal
confidential

Consumer AMD UMA/DISCRETE 17"

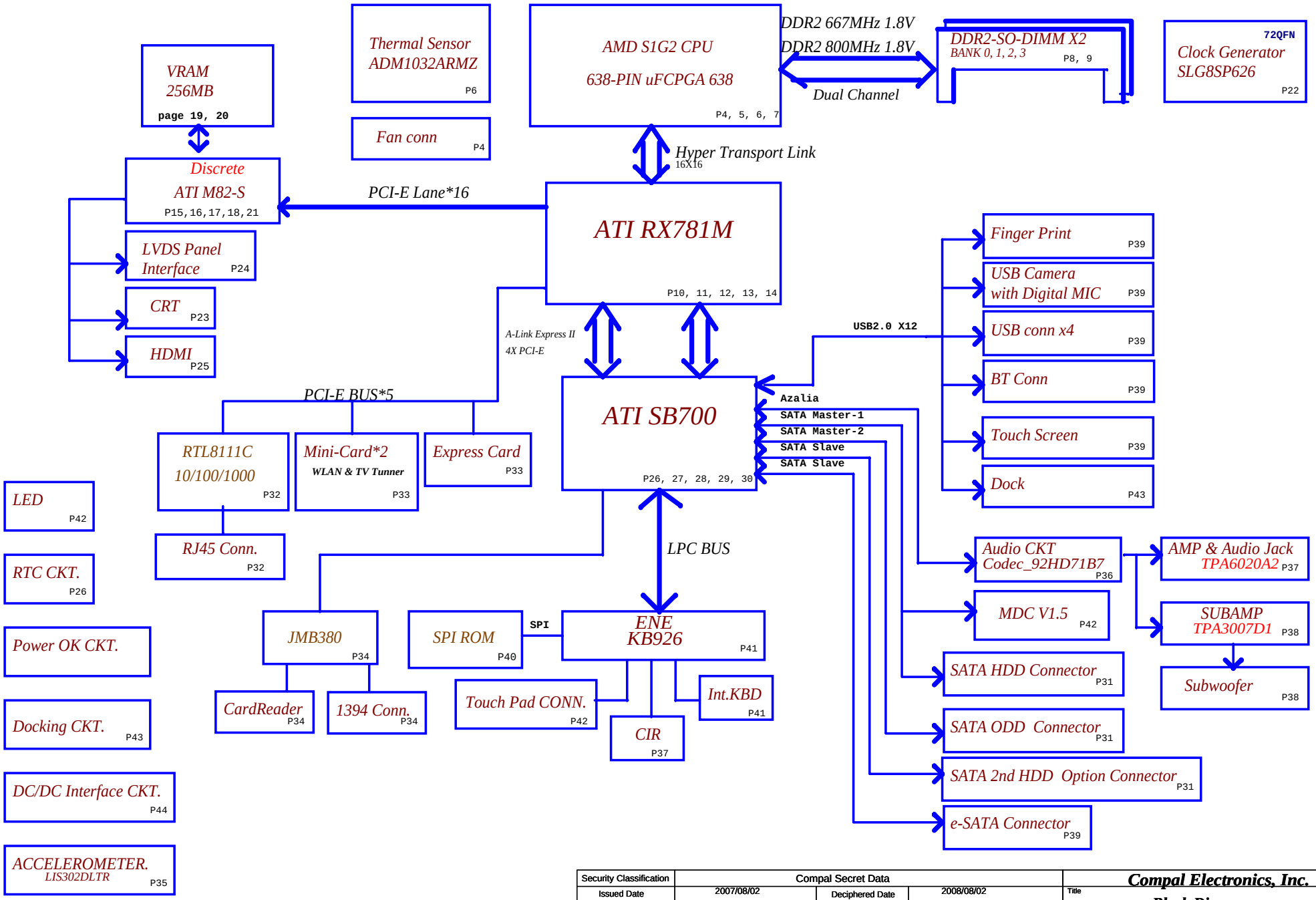

Security Classification	Compal Secret Data		
Issued Date	2007/08/02	Deciphered Date	2008/08/02

THIS SHEET OF ENGINEERING DRAWING IS THE PROPRIETARY PROPERTY OF COMPAL ELECTRONICS, INC. AND CONTAINS CONFIDENTIAL AND TRADE SECRET INFORMATION. THIS SHEET MAY NOT BE TRANSFERED FROM THE CUSTODY OF THE COMPETENT DIVISION OF R&D DEPARTMENT EXCEPT AS AUTHORIZED BY COMPAL ELECTRONICS, INC. NEITHER THIS SHEET NOR THE INFORMATION IT CONTAINS MAY BE USED BY OR DISCLOSED TO ANY THIRD PARTY WITHOUT PRIOR WRITTEN CONSENT OF COMPAL ELECTRONICS, INC.

Compal Electronics, Inc.

Title: **Block Diagram**

Size: Custom | Document Number: LA-4092P | Rev: 0.4

Date: Thursday, February 21, 2008 | Sheet 2 of 53

Voltage Rails

power plane / State	+B +3VL +5VL	+5VALW +3VALW +1.2VALW +3V_LAN	+1.8V +0.9V	+5VS +3VS +2.5VS +1.8VS +1.5VS +1.1VS +VGA_CORE +1.2V_HT +CPU_CORE_NB +CPU_CORE_0 +CPU_CORE_1
S0	O	O	O	O
S1	O	O	O	O
S3	O	O	O	X
S5 S4/AC	O	O	X	X
S5 S4/ Battery only	O	X	X	X
S5 S4/AC & Battery don't exist	X	X	X	X

O MEANS ON X MEANS OFF

Symbol Note :

: means Digital Ground

: means Analog Ground

@ : means just reserve , no build
DEBUG@ : means just reserve for debug.

Layout Notes

I2C / SMBUS ADDRESSING

DEVICE	HEX	ADDRESS
DDR SO-DIMM 0	A0	10100000
DDR SO-DIMM 1	A4	10100100
CLOCK GENERATOR (EXT.)	D2	11010010
ACCELEROMETER	3A	00111010

EC SM Bus1 address

Device	HEX	Address
Smart Battery	16H	0001 011X b
24C16	A0H	1010 000X b
CPU SIC interface	98H	1001 100X b

EC SM Bus2 address

Device	HEX	Address
ADI1032-2 CPU	9AH	1001 101X b
ADI1032-1 VGA	98H	1001 100X b

SMBUS Control Table

	SOURCE	INVERTER	BATT	SERIAL EEPROM	THERMAL SENSOR CPU & ADM1032	SODIMM I / II	CLK CHIP	MINI CARD Slot 2	LCD	HDMI	G-Sensor
SMB_EC_CK1 SMB_EC_DA1	KB926	X	V	V	X	X	X	X	X	X	X
SMB_EC_CK2 SMB_EC_DA2	KB926	X	X	X	V	X	X	X	X	X	X
I2C_CLK I2C_DATA	RS780M	X	X	X	X	X	X	X	V	X	X
DDC_CLK0 DDC_DATA0	RS780M	X	X	X	X	X	X	X	X	V	X
DDC_CLK1 DDC_DATA1	RS780M	X	X	X	X	X	X	X	X	X	X
SCL0 SDA0	SB700	X	X	X	X	V	V	X	X	X	V
SCL1 SDA1	SB700	X	X	X	X	X	X	V	X	X	X
SCL2 SDA2	SB700	X	X	X	X	X	X	X	X	X	X
SCL3 SDA3	SB700	X	X	X	X	X	X	X	X	X	X

THIS SHEET OF ENGINEERING DRAWING IS THE PROPRIETARY PROPERTY OF COMPAL ELECTRONICS, INC. AND CONTAINS CONFIDENTIAL AND TRADE SECRET INFORMATION. THIS SHEET MAY NOT BE TRANSFERED FROM THE CUSTODY OF THE COMPETENT DIVISION OF R&D DEPARTMENT EXCEPT AS AUTHORIZED BY COMPAL ELECTRONICS, INC. NEITHER THIS SHEET NOR THE INFORMATION IT CONTAINS MAY BE USED BY OR DISCLOSED TO ANY THIRD PARTY WITHOUT PRIOR WRITTEN CONSENT OF COMPAL ELECTRONICS, INC.

Security Classification	Compal Secret Data		
Issued Date	2007/08/02	Deciphered Date	2008/08/02

Compal Electronics, Inc.

Title: Notes List

Size: Custom | Document Number: LA-4092P | Rev: 0.4

Date: Thursday, February 21, 2008 | Sheet 3 of 53

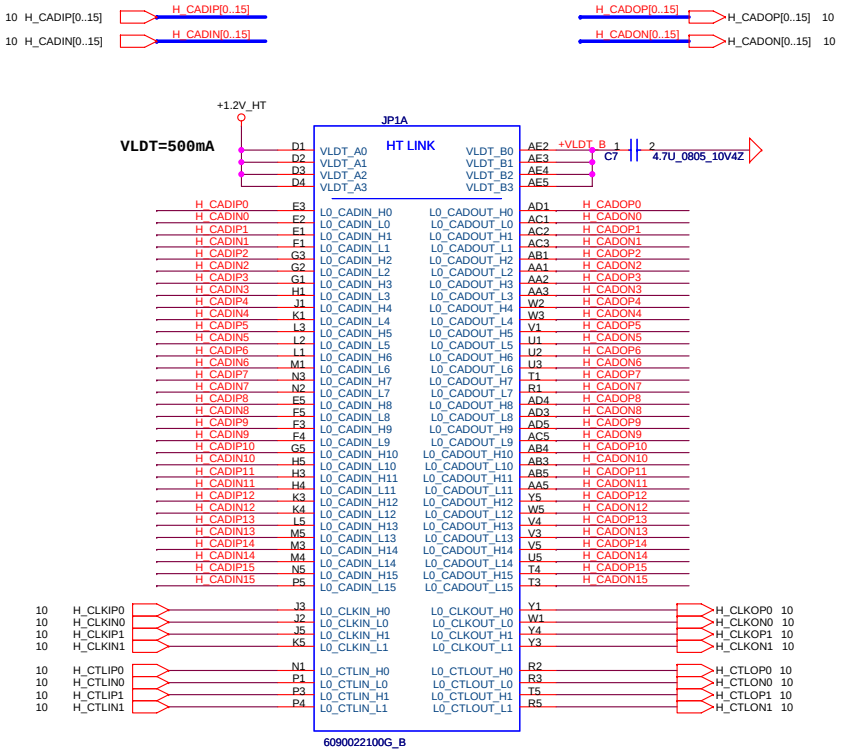

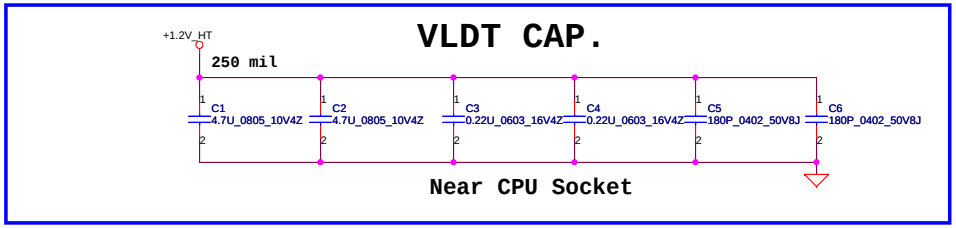

PWM Fan Control circuit

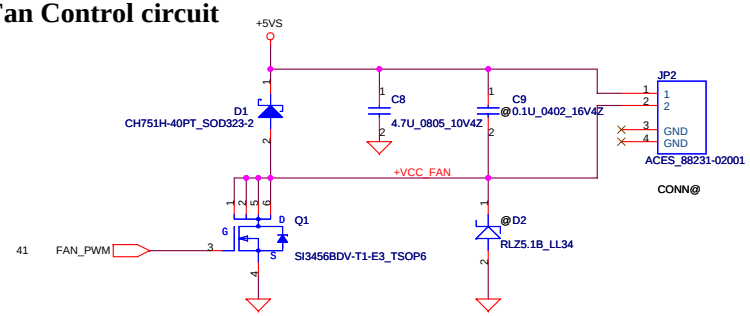

Security Classification	Compal Secret Data		
Issued Date	2007/08/02	Deciphered Date	2008/08/02

THIS SHEET OF ENGINEERING DRAWING IS THE PROPRIETARY PROPERTY OF COMPAL ELECTRONICS, INC. AND CONTAINS CONFIDENTIAL AND TRADE SECRET INFORMATION. THIS SHEET MAY NOT BE TRANSFERED FROM THE CUSTODY OF THE COMPETENT DIVISION OF R&D DEPARTMENT EXCEPT AS AUTHORIZED BY COMPAL ELECTRONICS, INC. NEITHER THIS SHEET NOR THE INFORMATION IT CONTAINS MAY BE USED BY OR DISCLOSED TO ANY THIRD PARTY WITHOUT PRIOR WRITTEN CONSENT OF COMPAL ELECTRONICS, INC.

Compal Electronics, Inc.

Title: **AMD CPU S1G2 HT I/F**

Size: Custom | Document Number: *LA-4092P* | Rev: 0.4

Date: Thursday, February 21, 2008 | Sheet 4 of 53

Processor DDR2 Memory Interface

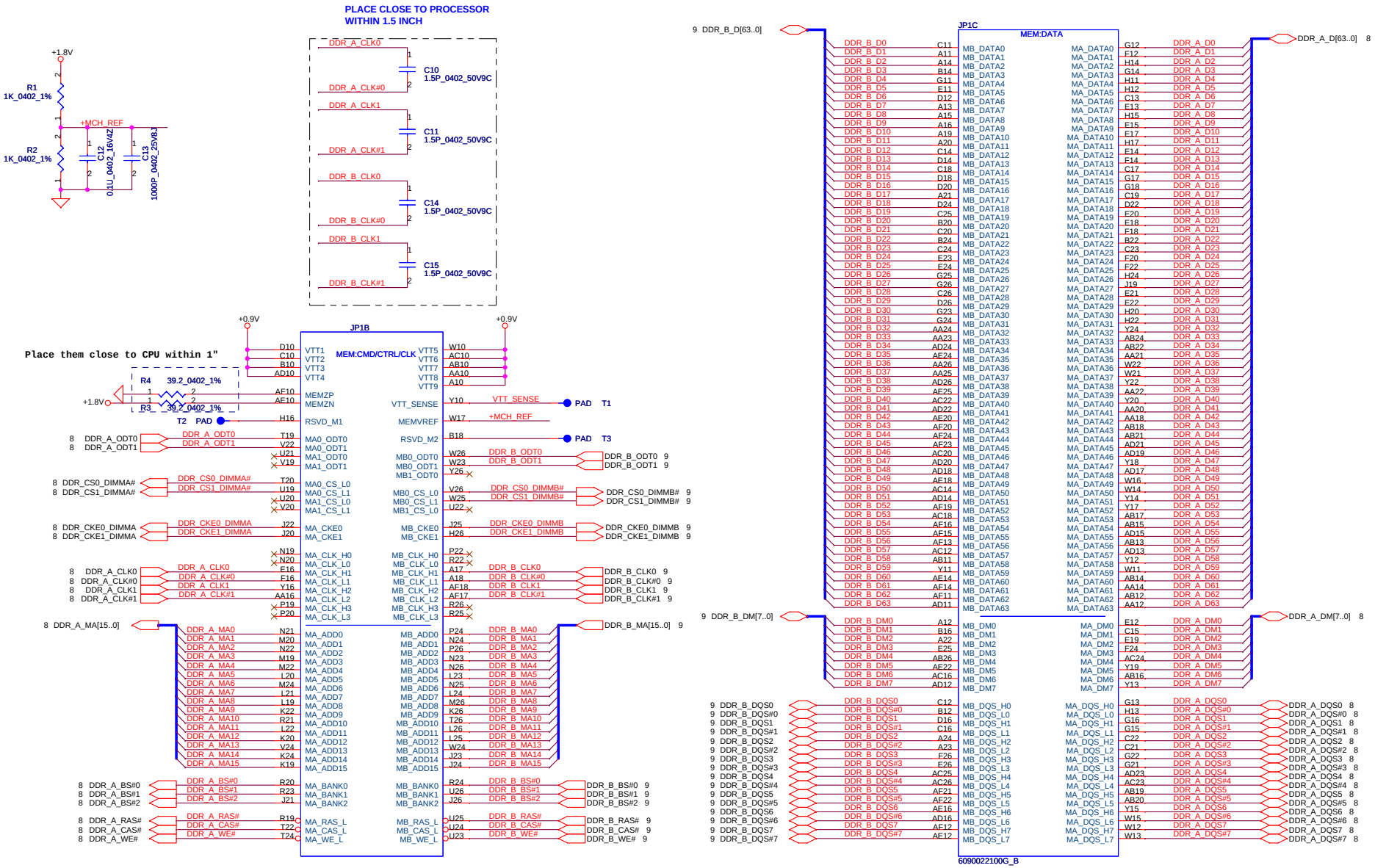

Security Classification	Compal Secret Data		
Issued Date	2007/08/02	Deciphered Date	2008/08/02

THIS SHEET OF ENGINEERING DRAWING IS THE PROPRIETARY PROPERTY OF COMPAL ELECTRONICS, INC. AND CONTAINS CONFIDENTIAL AND TRADE SECRET INFORMATION. THIS SHEET MAY NOT BE TRANSFERED FROM THE CUSTODY OF THE COMPETENT DIVISION OF R&D DEPARTMENT EXCEPT AS AUTHORIZED BY COMPAL ELECTRONICS, INC. NEITHER THIS SHEET NOR THE INFORMATION IT CONTAINS MAY BE USED BY OR DISCLOSED TO ANY THIRD PARTY WITHOUT PRIOR WRITTEN CONSENT OF COMPAL ELECTRONICS, INC.

Compal Electronics, Inc.

Title: **AMD CPU S1G2 DDRII I/F**

Size: Custom | Document Number: LA-4092P | Rev: 0.4

Date: Thursday, February 21, 2008 | Sheet 5 of 53

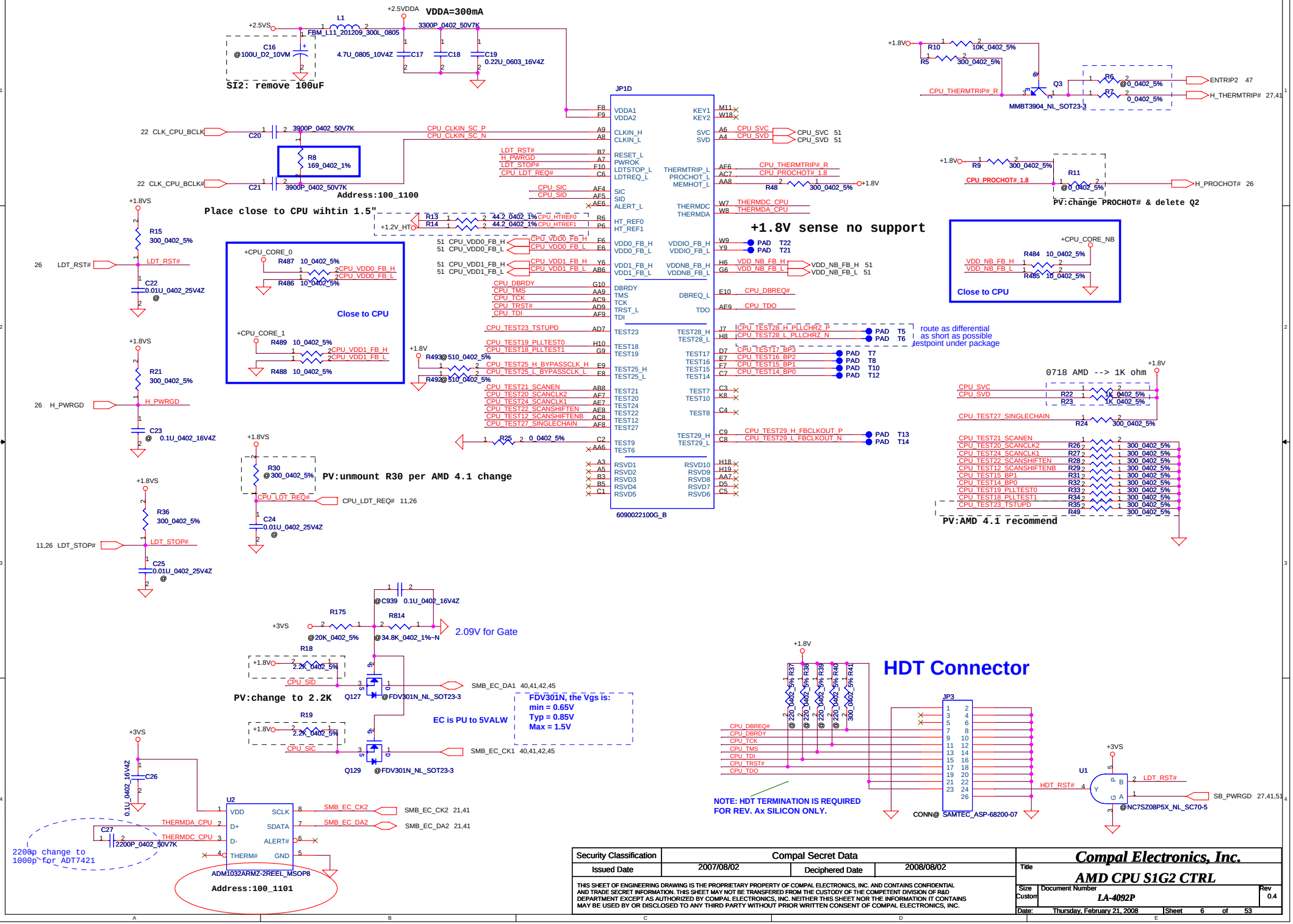

Security Classification	Compal Secret Data		
Issued Date	2007/08/02	Deciphered Date	2008/08/02

THIS SHEET OF ENGINEERING DRAWING IS THE PROPRIETARY PROPERTY OF COMPAL ELECTRONICS, INC. AND CONTAINS CONFIDENTIAL AND TRADE SECRET INFORMATION. THIS SHEET MAY NOT BE TRANSFERRED FROM THE CUSTODY OF THE COMPETENT DIVISION OF R&D DEPARTMENT EXCEPT AS AUTHORIZED BY COMPAL ELECTRONICS, INC. NEITHER THIS SHEET NOR THE INFORMATION IT CONTAINS MAY BE USED BY OR DISCLOSED TO ANY THIRD PARTY WITHOUT PRIOR WRITTEN CONSENT OF COMPAL ELECTRONICS, INC.

Compal Electronics, Inc.

Title: **AMD CPU S1G2 CTRL**

Size	Document Number	Rev
Custom	LA-4092P	0.4

Date: Thursday, February 21, 2008 | Sheet 6 of 53

VDD(+CPU_CORE) decoupling.

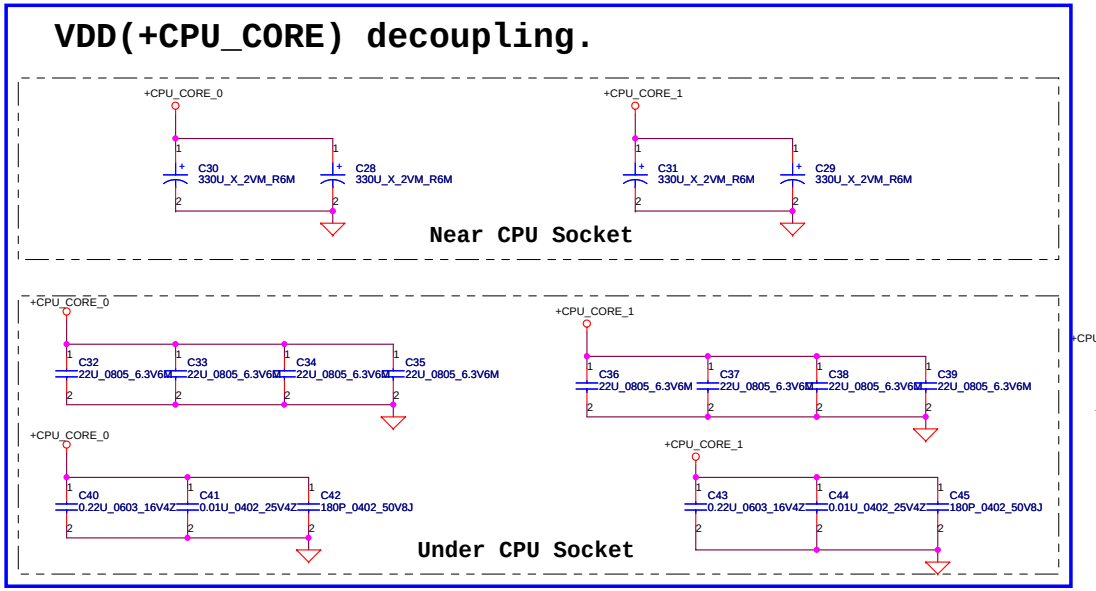

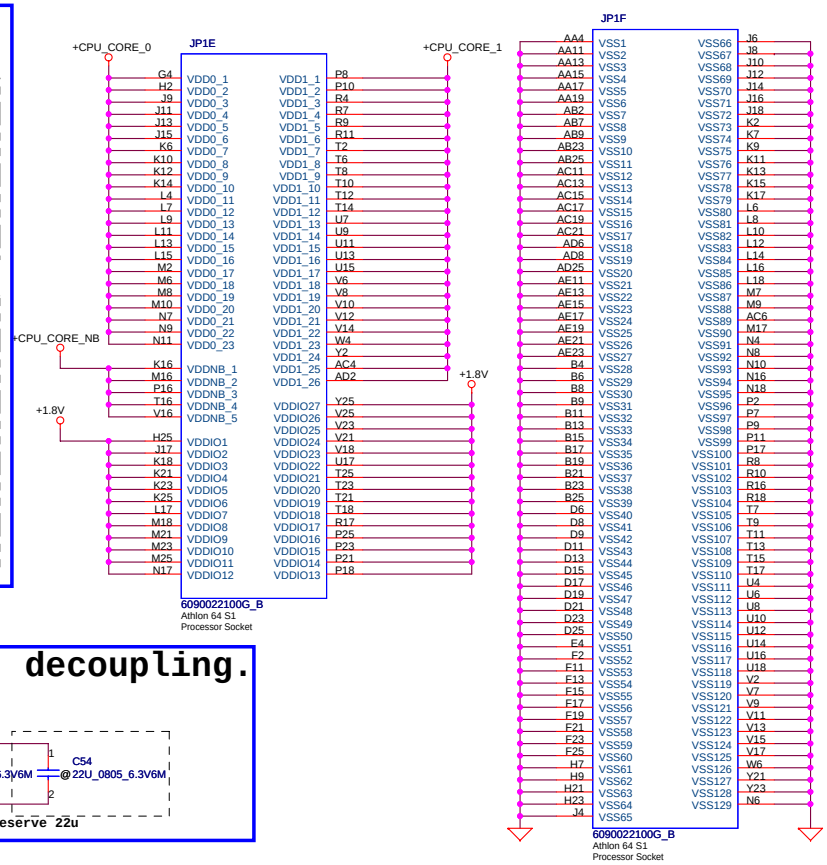

VDDIO decoupling.

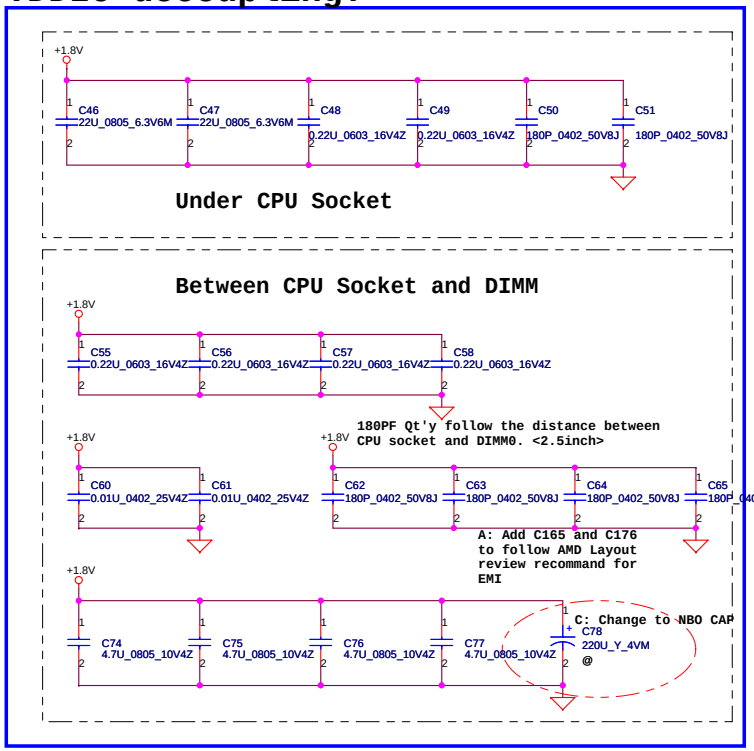

+CPU_CORE_NB decoupling.

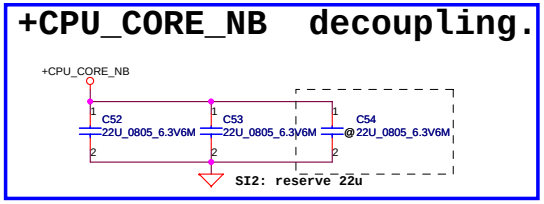

VTT decoupling.

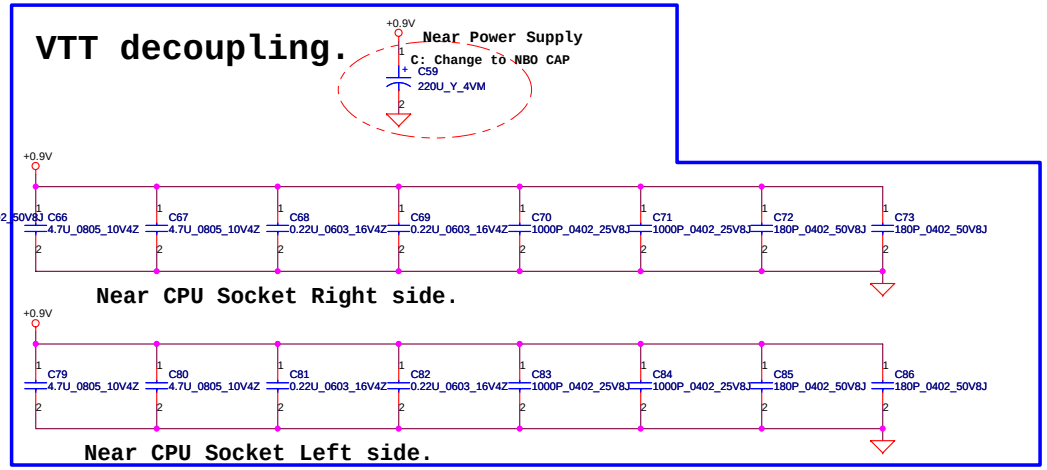

Security Classification	Compal Secret Data		
Issued Date	2007/08/02	Deciphered Date	2008/08/02

THIS SHEET OF ENGINEERING DRAWING IS THE PROPRIETARY PROPERTY OF COMPAL ELECTRONICS, INC. AND CONTAINS CONFIDENTIAL AND TRADE SECRET INFORMATION. THIS SHEET MAY NOT BE TRANSFERED FROM THE CUSTODY OF THE COMPETENT DIVISION OF R&D DEPARTMENT EXCEPT AS AUTHORIZED BY COMPAL ELECTRONICS, INC. NEITHER THIS SHEET NOR THE INFORMATION IT CONTAINS MAY BE USED BY OR DISCLOSED TO ANY THIRD PARTY WITHOUT PRIOR WRITTEN CONSENT OF COMPAL ELECTRONICS, INC.

Compal Electronics, Inc.

Title: **AMD CPU S1G2 PWR & GND**

Size: Custom | Document Number: LA-4092P | Rev: 0.4

Date: Thursday, February 21, 2008 | Sheet 7 of 53

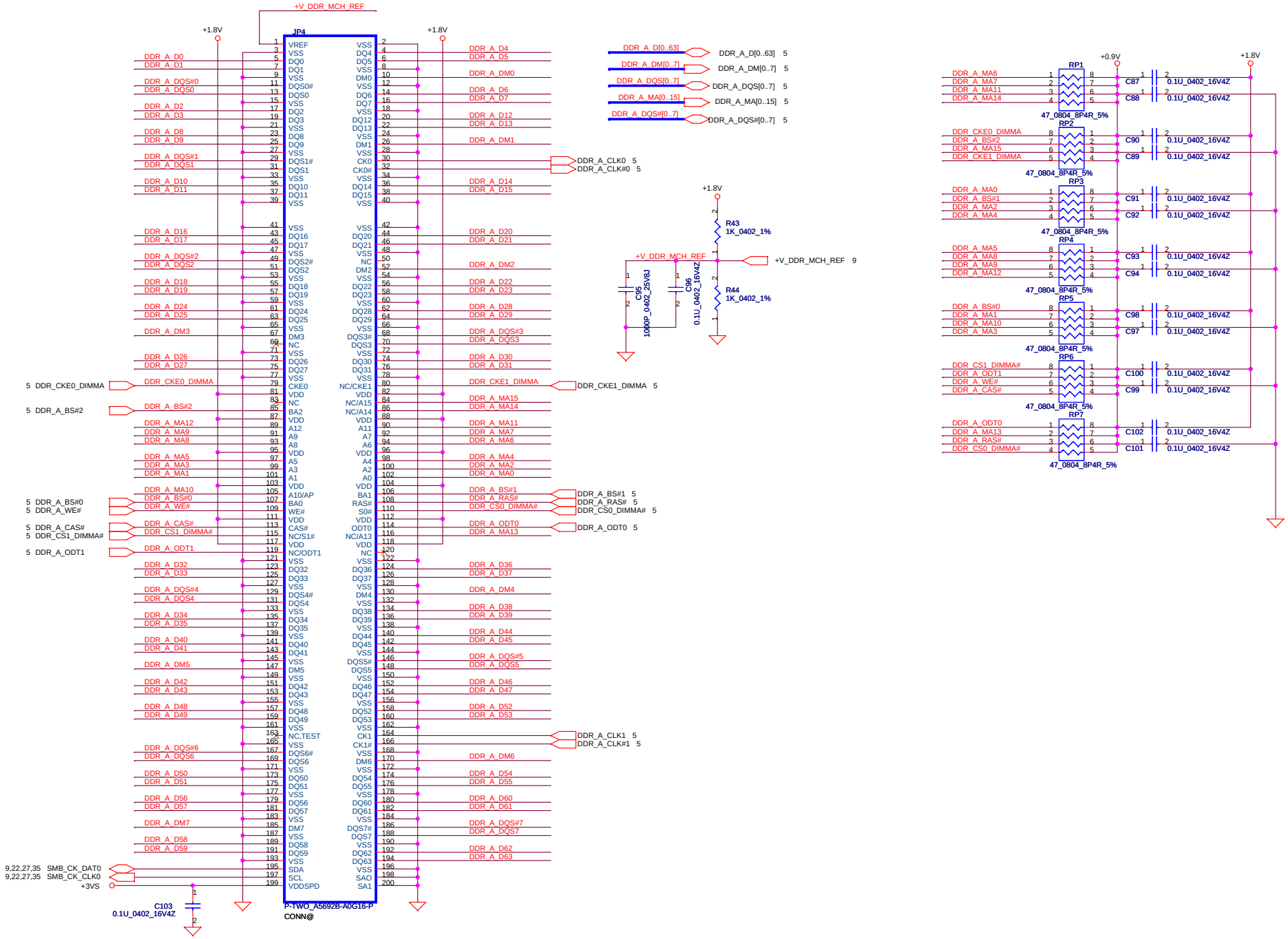

Security Classification	Compal Secret Data		
Issued Date	2007/08/02	Deciphered Date	2008/08/02

THIS SHEET OF ENGINEERING DRAWING IS THE PROPRIETARY PROPERTY OF COMPAL ELECTRONICS, INC. AND CONTAINS CONFIDENTIAL AND TRADE SECRET INFORMATION. THIS SHEET MAY NOT BE TRANSFERED FROM THE CUSTODY OF THE COMPETENT DIVISION OF R&D DEPARTMENT EXCEPT AS AUTHORIZED BY COMPAL ELECTRONICS, INC. NEITHER THIS SHEET NOR THE INFORMATION IT CONTAINS MAY BE USED BY OR DISCLOSED TO ANY THIRD PARTY WITHOUT PRIOR WRITTEN CONSENT OF COMPAL ELECTRONICS, INC.

Compal Electronics, Inc.

Title: **DDRII SO-DIMM 0**

Size: Custom | Document Number: LA-4092P | Rev: 0.4

Date: Thursday, February 21, 2008 | Sheet 8 of 53

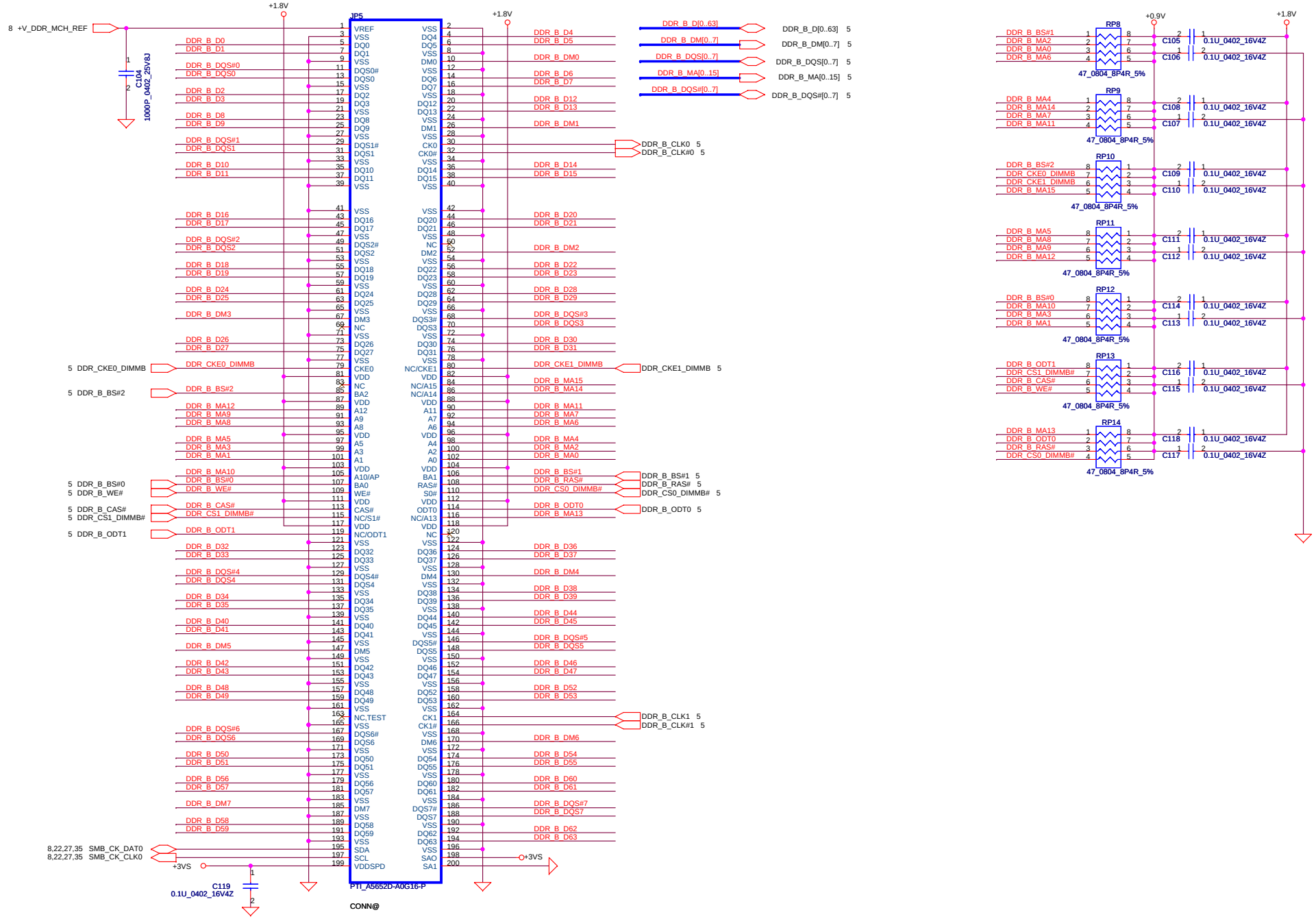

Security Classification	Compal Secret Data		
Issued Date	2007/08/02	Deciphered Date	2008/08/02

THIS SHEET OF ENGINEERING DRAWING IS THE PROPRIETARY PROPERTY OF COMPAL ELECTRONICS, INC. AND CONTAINS CONFIDENTIAL AND TRADE SECRET INFORMATION. THIS SHEET MAY NOT BE TRANSFERED FROM THE CUSTODY OF THE COMPETENT DIVISION OF R&D DEPARTMENT EXCEPT AS AUTHORIZED BY COMPAL ELECTRONICS, INC. NEITHER THIS SHEET NOR THE INFORMATION IT CONTAINS MAY BE USED BY OR DISCLOSED TO ANY THIRD PARTY WITHOUT PRIOR WRITTEN CONSENT OF COMPAL ELECTRONICS, INC.

Compal Electronics, Inc.

Title: **DDRII SO-DIMM 1**

Size: Custom | Document Number: LA-4092P | Rev: 0.4

Date: Thursday, February 21, 2008 | Sheet 9 of 53

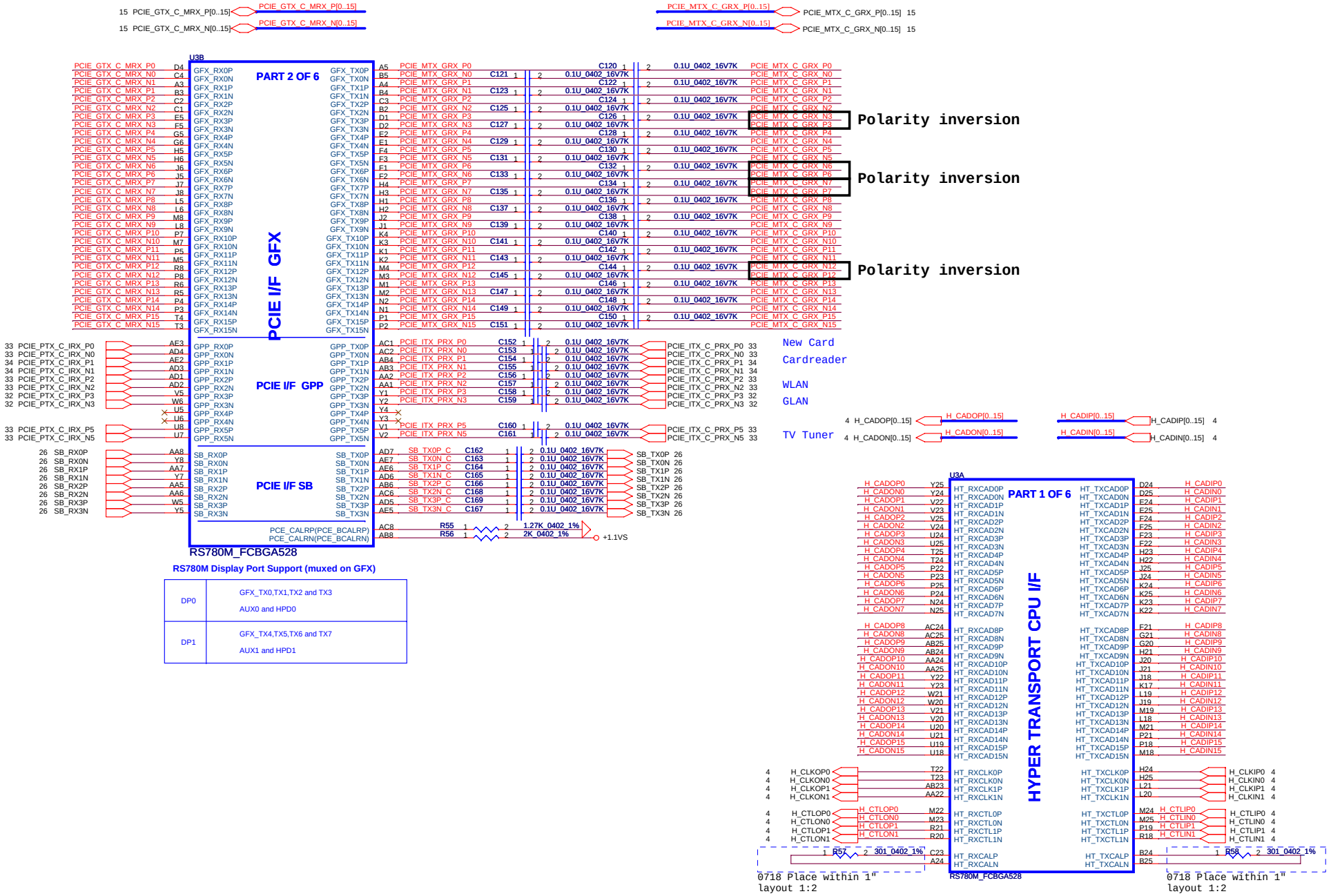

RS780M Display Port Support (muxed on GFX)

DP0	GFX_TX0,TX1,TX2 and TX3 AUX0 and HPD0
DP1	GFX_TX4,TX5,TX6 and TX7 AUX1 and HPD1

Security Classification	Compal Secret Data		
Issued Date	2007/08/02	Deciphered Date	2008/08/02

THIS SHEET OF ENGINEERING DRAWING IS THE PROPRIETARY PROPERTY OF COMPAL ELECTRONICS, INC. AND CONTAINS CONFIDENTIAL AND TRADE SECRET INFORMATION. THIS SHEET MAY NOT BE TRANSFERED FROM THE CUSTODY OF THE COMPETENT DIVISION OF R&D DEPARTMENT EXCEPT AS AUTHORIZED BY COMPAL ELECTRONICS, INC. NEITHER THIS SHEET NOR THE INFORMATION IT CONTAINS MAY BE USED BY OR DISCLOSED TO ANY THIRD PARTY WITHOUT PRIOR WRITTEN CONSENT OF COMPAL ELECTRONICS, INC.

Compal Electronics, Inc.

Title: **RS780-HT/PCIE**

Size: Custom | Document Number: LA-4092P | Rev: 0.4

Date: Thursday, February 21, 2008 | Sheet 10 of 53

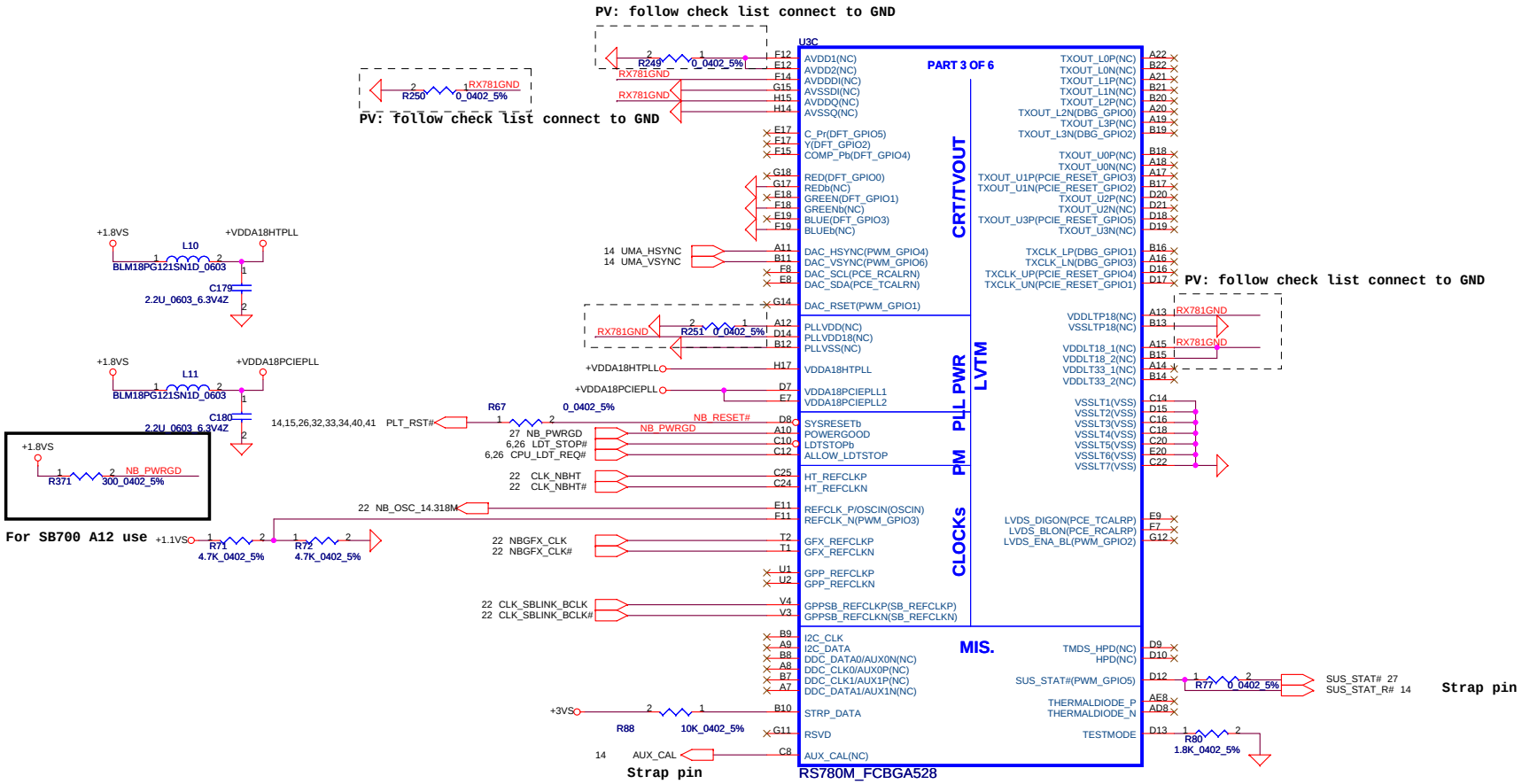

Security Classification	Compal Secret Data		
Issued Date	2007/08/02	Deciphered Date	2008/08/02

THIS SHEET OF ENGINEERING DRAWING IS THE PROPRIETARY PROPERTY OF COMPAL ELECTRONICS, INC. AND CONTAINS CONFIDENTIAL AND TRADE SECRET INFORMATION. THIS SHEET MAY NOT BE TRANSFERED FROM THE CUSTODY OF THE COMPETENT DIVISION OF R&D DEPARTMENT EXCEPT AS AUTHORIZED BY COMPAL ELECTRONICS, INC. NEITHER THIS SHEET NOR THE INFORMATION IT CONTAINS MAY BE USED BY OR DISCLOSED TO ANY THIRD PARTY WITHOUT PRIOR WRITTEN CONSENT OF COMPAL ELECTRONICS, INC.

Compal Electronics, Inc.

Title: **RS780 VEDIO/CLK GEN**

Size: Custom | Document Number: LA-4092P | Rev: 0.4

Date: Thursday, February 21, 2008 | Sheet 11 of 53

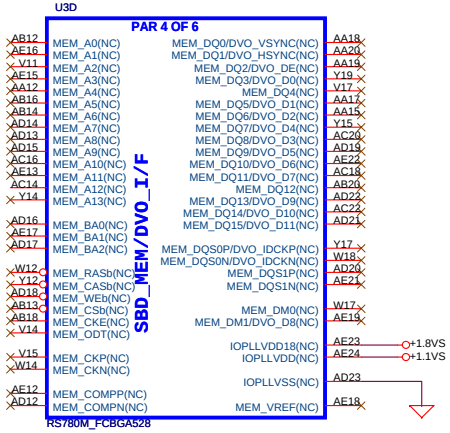

Security Classification	Compal Secret Data		
Issued Date	2007/08/02	Deciphered Date	2008/08/02

THIS SHEET OF ENGINEERING DRAWING IS THE PROPRIETARY PROPERTY OF COMPAL ELECTRONICS, INC. AND CONTAINS CONFIDENTIAL AND TRADE SECRET INFORMATION. THIS SHEET MAY NOT BE TRANSFERED FROM THE CUSTODY OF THE COMPETENT DIVISION OF R&D DEPARTMENT EXCEPT AS AUTHORIZED BY COMPAL ELECTRONICS, INC. NEITHER THIS SHEET NOR THE INFORMATION IT CONTAINS MAY BE USED BY OR DISCLOSED TO ANY THIRD PARTY WITHOUT PRIOR WRITTEN CONSENT OF COMPAL ELECTRONICS, INC.

Compal Electronics, Inc.

Title: **RS780 SIDE PORT**

Size: Custom | Document Number: **LA-4092P** | Rev: 0.4

Date: Thursday, February 21, 2008 | Sheet 12 of 53

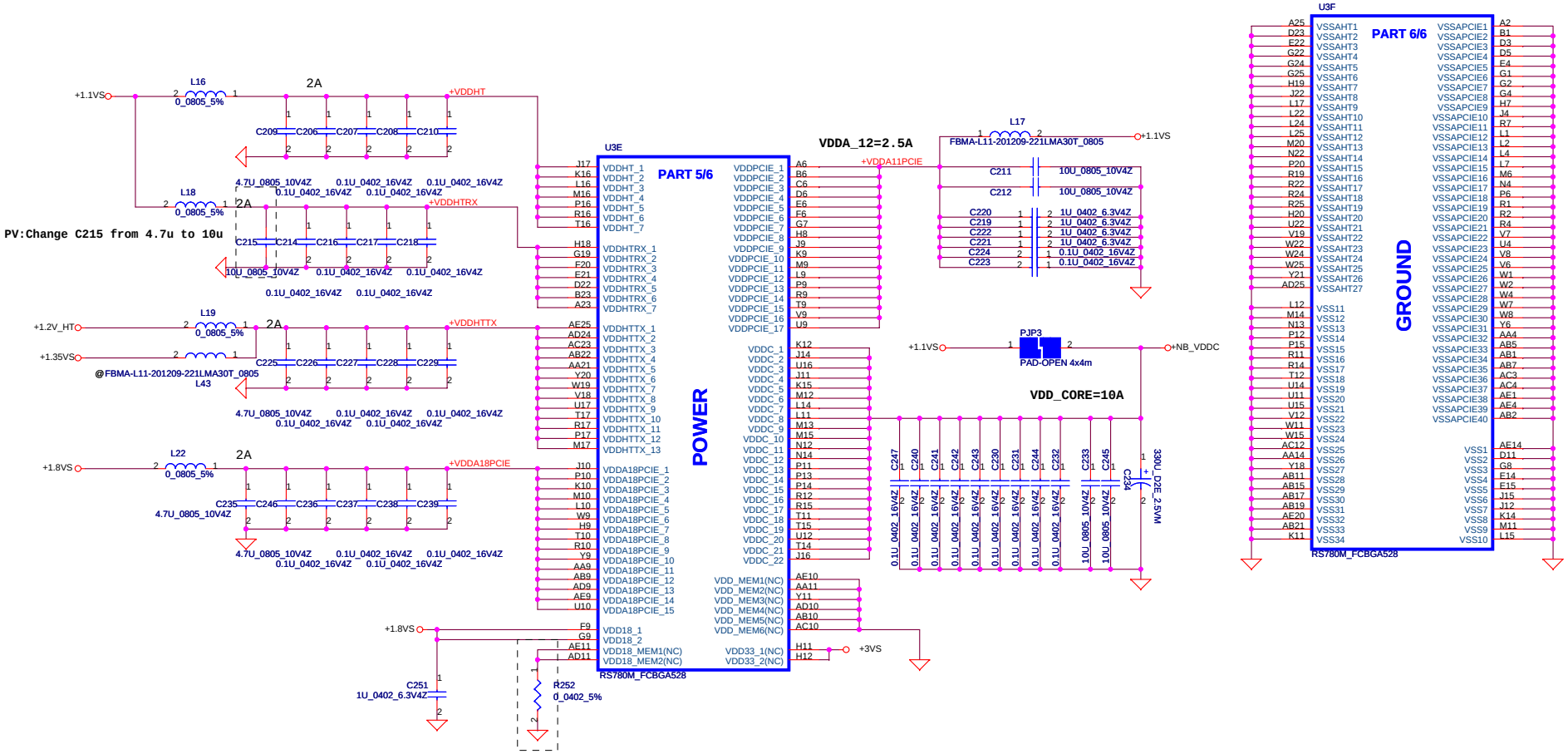

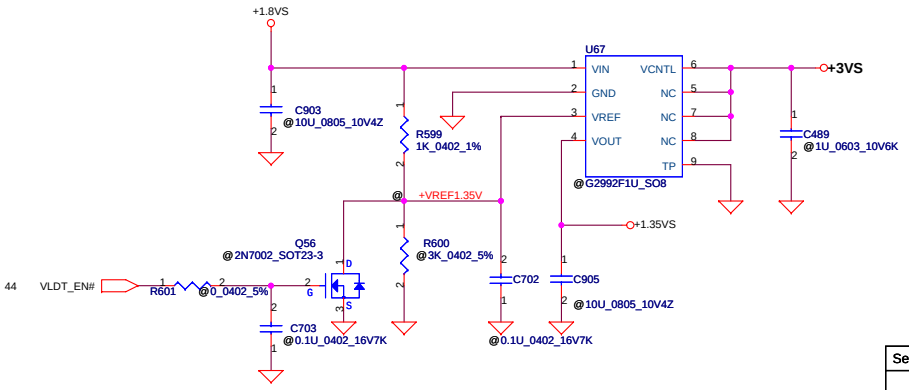

Security Classification	Compal Secret Data		
Issued Date	2007/08/02	Deciphered Date	2008/08/02

THIS SHEET OF ENGINEERING DRAWING IS THE PROPRIETARY PROPERTY OF COMPAL ELECTRONICS, INC. AND CONTAINS CONFIDENTIAL AND TRADE SECRET INFORMATION. THIS SHEET MAY NOT BE TRANSFERED FROM THE CUSTODY OF THE COMPETENT DIVISION OF R&D DEPARTMENT EXCEPT AS AUTHORIZED BY COMPAL ELECTRONICS, INC. NEITHER THIS SHEET NOR THE INFORMATION IT CONTAINS MAY BE USED BY OR DISCLOSED TO ANY THIRD PARTY WITHOUT PRIOR WRITTEN CONSENT OF COMPAL ELECTRONICS, INC.

Compal Electronics, Inc.

Title: **RS780 PWR/GND**

Size	Document Number	Rev
Custom	LA-4092P	0.4

Date: Thursday, February 21, 2008 | Sheet 13 of 53

RS780 DFT_GPIO5 mux at CRT_VSYNC pull high to 3K

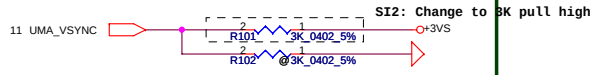

DFT_GPIO5:STRAP_DEBUG_BUS_GPIO_ENABLEb

```
Enables the Test Debug Bus using GPIO.
1 : Enable (RX780, RS780)
0 : Disable (RX780, RS780)
PIN: RS740-->RS780_AUX_CAL; RX780-->NB_TV_C; RS780--> VSYNC#
```

RS780 use register to control PCI-E configure

DFT_GPIO[4:2]: STRAP_PCIE_GPP_CFG[2:0]

```
These pin straps are used to configure PCI-E GPP mode.
000 : 00001
001 : 00010
010 : 01011
011 : 00100
100 : 01010
101 : 01100
111 : 01011
```

RS780 DFT_GPIO1

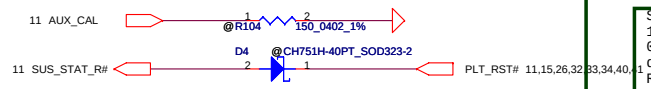

RX780 DFT_GPIO1 mux at GREEN(Ball E18) and change pull low form 150 to 3K.

DFT_GPIO1: LOAD_EEPROM_STRAPS

```
Selects Loading of STRAPS from EPROM
1 : Bypass the loading of EEPROM straps and use Hardware Default Values
0 : I2C Master can load strap values from EEPROM if connected, or use
default values if not connected
RS740/RX780: DFT_GPIO1  RS780:SUS_STAT
```

RS780 use HSYNC to enable SIDE PORT (internal pull high)

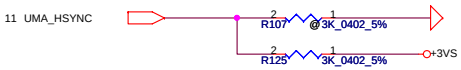

DFT_GPIO0: STRAP_DEBUG_BUS_PCIE_ENABLEb

```
RX780: Enables the Test Debug Bus using PCIE bus
1 : Disable ( Can still be enabled using nbcfg register access )
0 : Enable

RS780: Enables Side port memory ( RS780 use HSYNC#)
1.  Disable (RS780)
0 : Enable (RS780)
```

Security Classification	Compal Secret Data		
Issued Date	2007/08/02	Deciphered Date	2008/08/02

THIS SHEET OF ENGINEERING DRAWING IS THE PROPRIETARY PROPERTY OF COMPAL ELECTRONICS, INC. AND CONTAINS CONFIDENTIAL AND TRADE SECRET INFORMATION. THIS SHEET MAY NOT BE TRANSFERED FROM THE CUSTODY OF THE COMPETENT DIVISION OF R&D DEPARTMENT EXCEPT AS AUTHORIZED BY COMPAL ELECTRONICS, INC. NEITHER THIS SHEET NOR THE INFORMATION IT CONTAINS MAY BE USED BY OR DISCLOSED TO ANY THIRD PARTY WITHOUT PRIOR WRITTEN CONSENT OF COMPAL ELECTRONICS, INC.

Compal Electronics, Inc.

Title: **RS780 STRAPS**

Size: Custom | Document Number: LA-4092P | Rev: 0.4

Date: Thursday, February 21, 2008 | Sheet 14 of 53

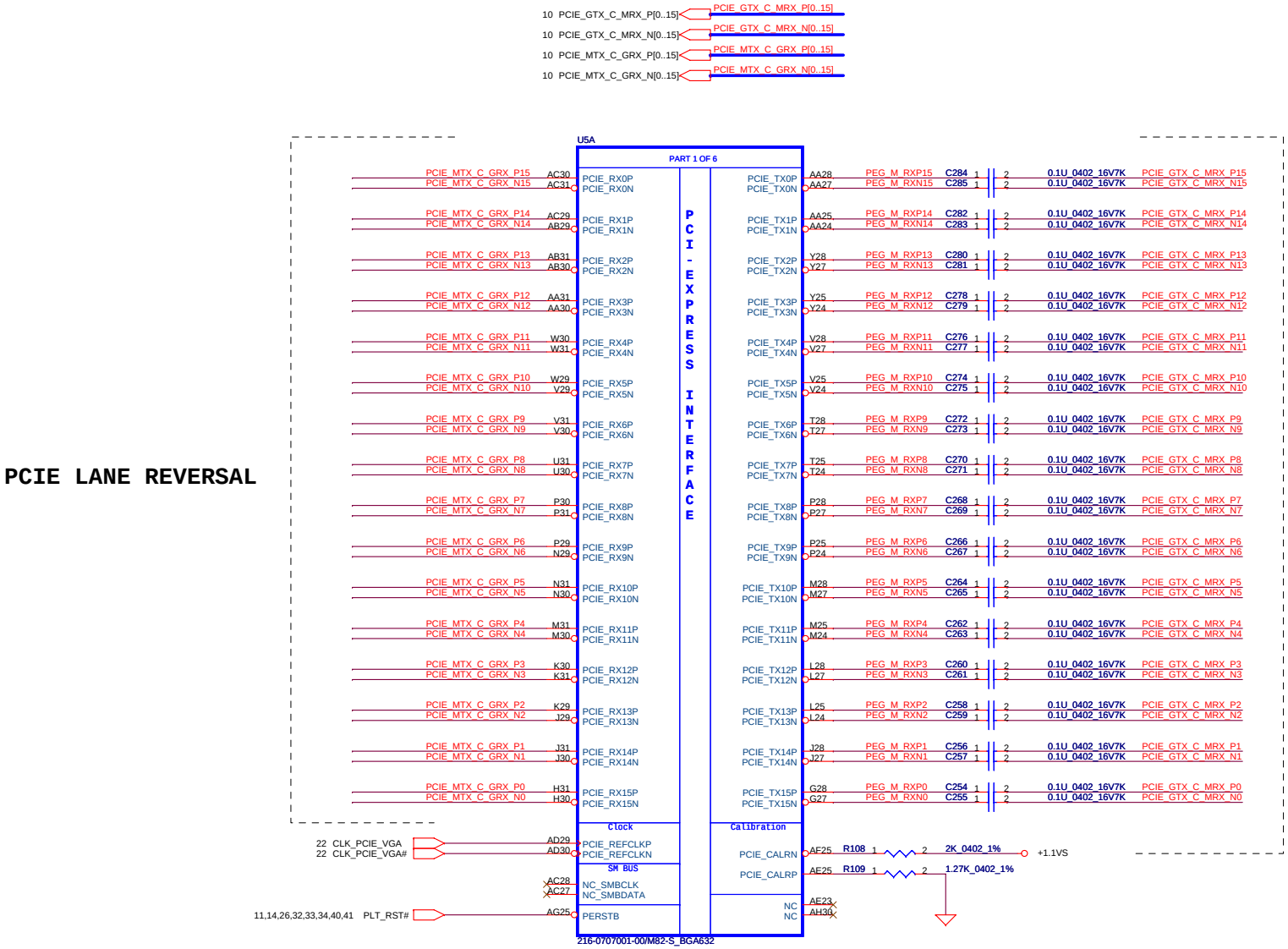

Security Classification	Compal Secret Data		
Issued Date	2006/09/25	Deciphered Date	2006/09/25

THIS SHEET OF ENGINEERING DRAWING IS THE PROPRIETARY PROPERTY OF COMPAL ELECTRONICS, INC. AND CONTAINS CONFIDENTIAL AND TRADE SECRET INFORMATION. THIS SHEET MAY NOT BE TRANSFERED FROM THE CUSTODY OF THE COMPETENT DIVISION OF R&D DEPARTMENT EXCEPT AS AUTHORIZED BY COMPAL ELECTRONICS, INC. NEITHER THIS SHEET NOR THE INFORMATION IT CONTAINS MAY BE USED BY OR DISCLOSED TO ANY THIRD PARTY WITHOUT PRIOR WRITTEN CONSENT OF COMPAL ELECTRONICS, INC.

Compal Electronics, Inc.

Title: **M82-S PCIE interface**

Size: | Document Number: *LA-4092P* | Rev: 0.4

Date: Thursday, February 21, 2008 | Sheet 15 of 53

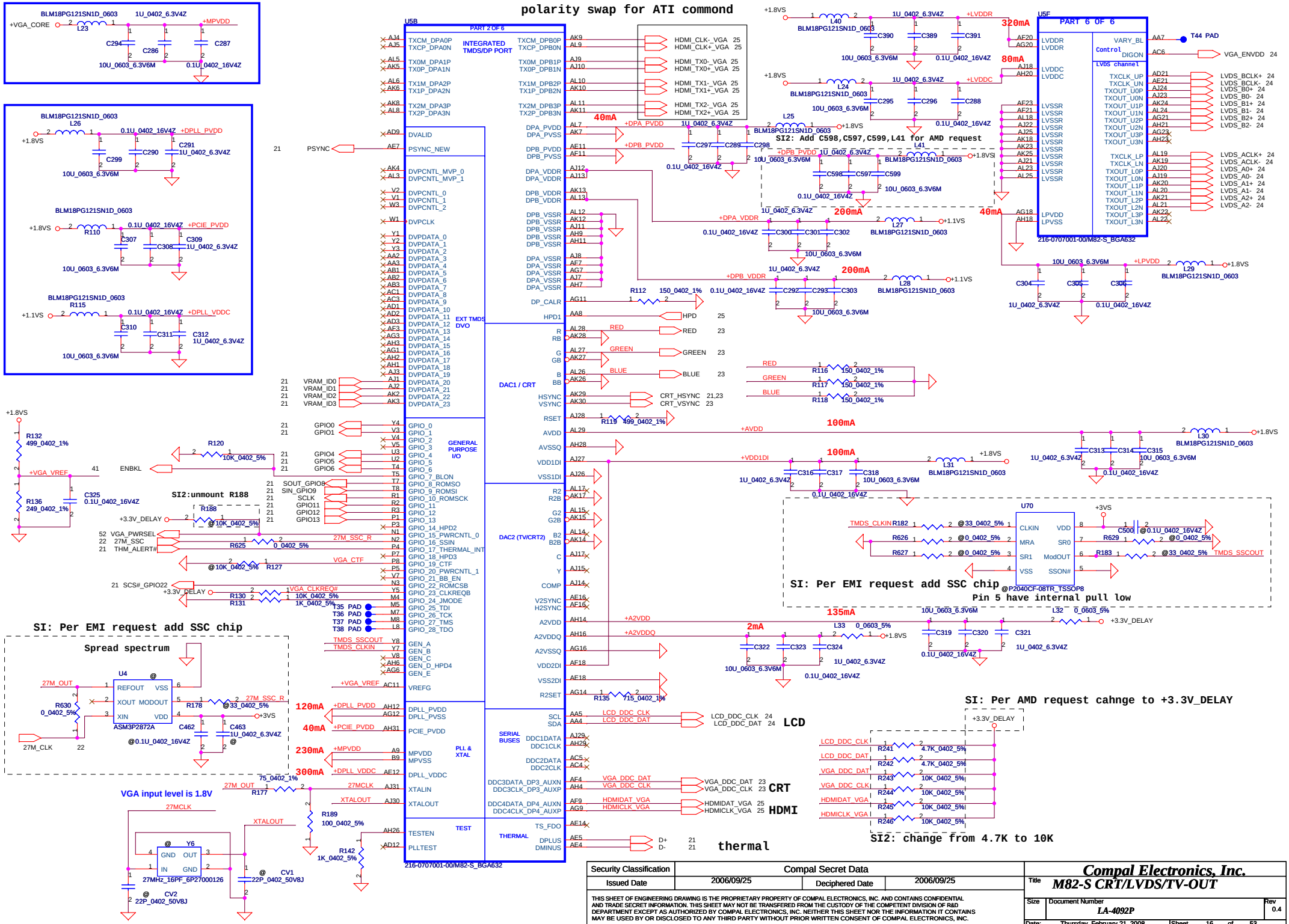

Security Classification	Compal Secret Data		
Issued Date	2006/09/25	Deciphered Date	2006/09/25

THIS SHEET OF ENGINEERING DRAWING IS THE PROPRIETARY PROPERTY OF COMPAL ELECTRONICS, INC. AND CONTAINS CONFIDENTIAL AND TRADE SECRET INFORMATION. THIS SHEET MAY NOT BE TRANSFERED FROM THE CUSTODY OF THE COMPETENT DIVISION OF R&D DEPARTMENT EXCEPT AS AUTHORIZED BY COMPAL ELECTRONICS, INC. NEITHER THIS SHEET NOR THE INFORMATION IT CONTAINS MAY BE USED BY OR DISCLOSED TO ANY THIRD PARTY WITHOUT PRIOR WRITTEN CONSENT OF COMPAL ELECTRONICS, INC.

Compal Electronics, Inc.

Title: **M82-S CRT/LVDS/TV-OUT**

Size: | Document Number: *LA-4092P* | Rev: 0.4

Date: Thursday, February 21, 2008 | Sheet 16 of 53

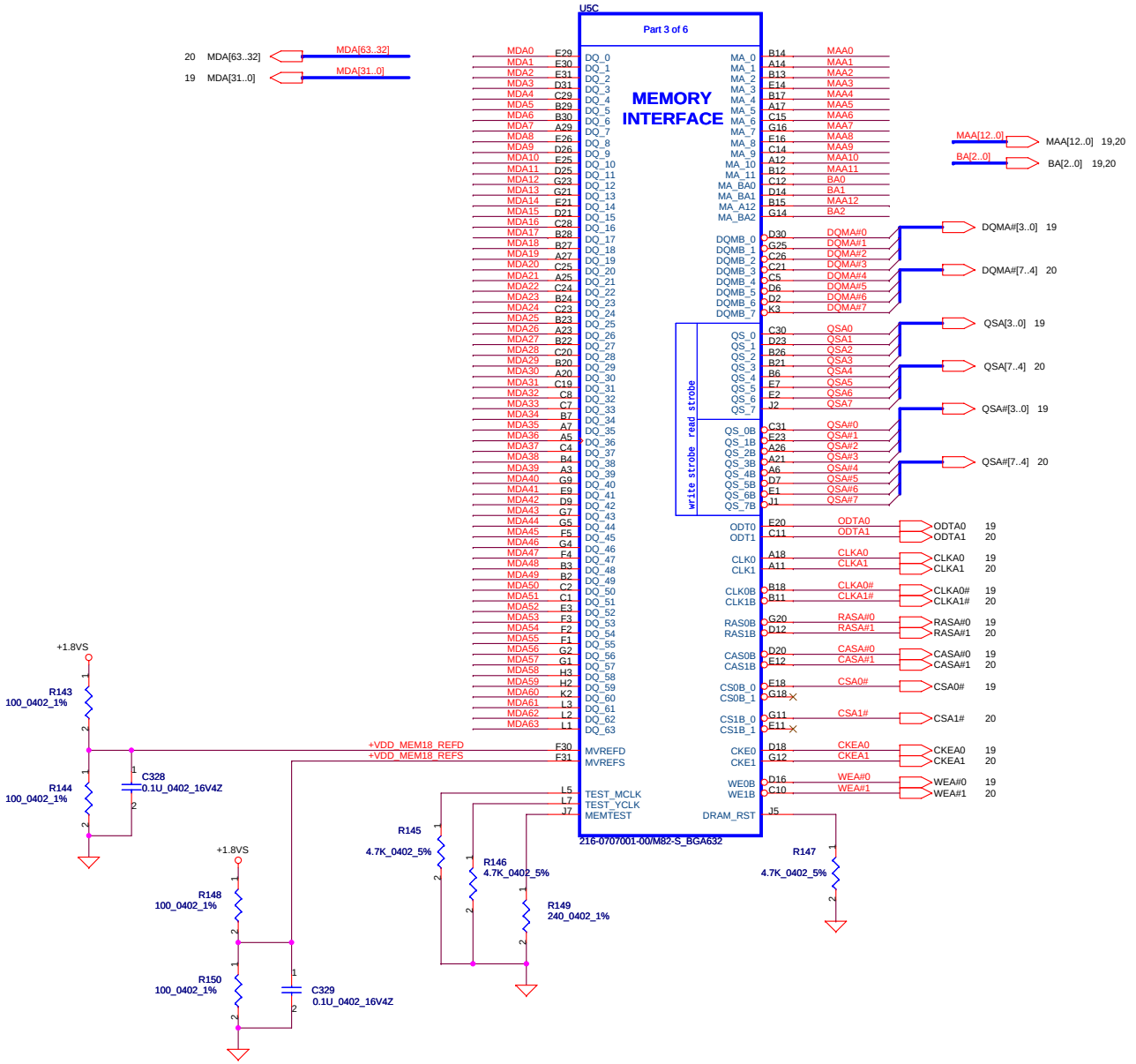

Security Classification	Compal Secret Data		
Issued Date	2006/09/25	Deciphered Date	2006/09/25

THIS SHEET OF ENGINEERING DRAWING IS THE PROPRIETARY PROPERTY OF COMPAL ELECTRONICS, INC. AND CONTAINS CONFIDENTIAL AND TRADE SECRET INFORMATION. THIS SHEET MAY NOT BE TRANSFERED FROM THE CUSTODY OF THE COMPETENT DIVISION OF R&D DEPARTMENT EXCEPT AS AUTHORIZED BY COMPAL ELECTRONICS, INC. NEITHER THIS SHEET NOR THE INFORMATION IT CONTAINS MAY BE USED BY OR DISCLOSED TO ANY THIRD PARTY WITHOUT PRIOR WRITTEN CONSENT OF COMPAL ELECTRONICS, INC.

Compal Electronics, Inc.

Title: **M82-S MEM**

Size | Document Number: *LA-4092P* | Rev: 0.4

Date: Thursday, February 21, 2008 | Sheet 17 of 53

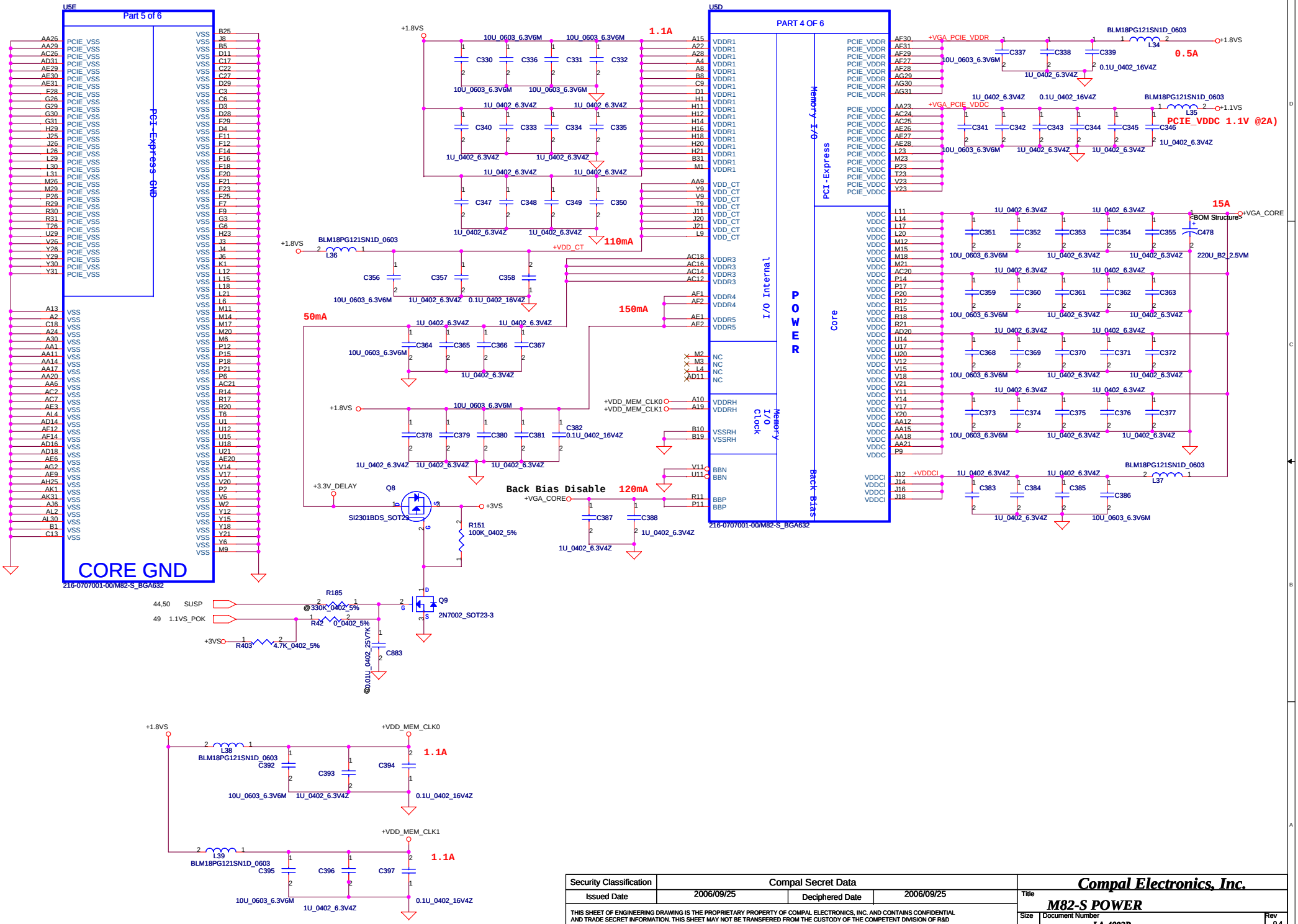

Security Classification	Compal Secret Data		
Issued Date	2006/09/25	Deciphered Date	2006/09/25

THIS SHEET OF ENGINEERING DRAWING IS THE PROPRIETARY PROPERTY OF COMPAL ELECTRONICS, INC. AND CONTAINS CONFIDENTIAL AND TRADE SECRET INFORMATION. THIS SHEET MAY NOT BE TRANSFERED FROM THE CUSTODY OF THE COMPETENT DIVISION OF R&D DEPARTMENT EXCEPT AS AUTHORIZED BY COMPAL ELECTRONICS, INC. NEITHER THIS SHEET NOR THE INFORMATION IT CONTAINS MAY BE USED BY OR DISCLOSED TO ANY THIRD PARTY WITHOUT PRIOR WRITTEN CONSENT OF COMPAL ELECTRONICS, INC.

Compal Electronics, Inc.

Title: **M82-S POWER**

Size | Document Number: *LA-4092P* | Rev: 0.4

Date: Thursday, February 21, 2008 | Sheet 18 of 53

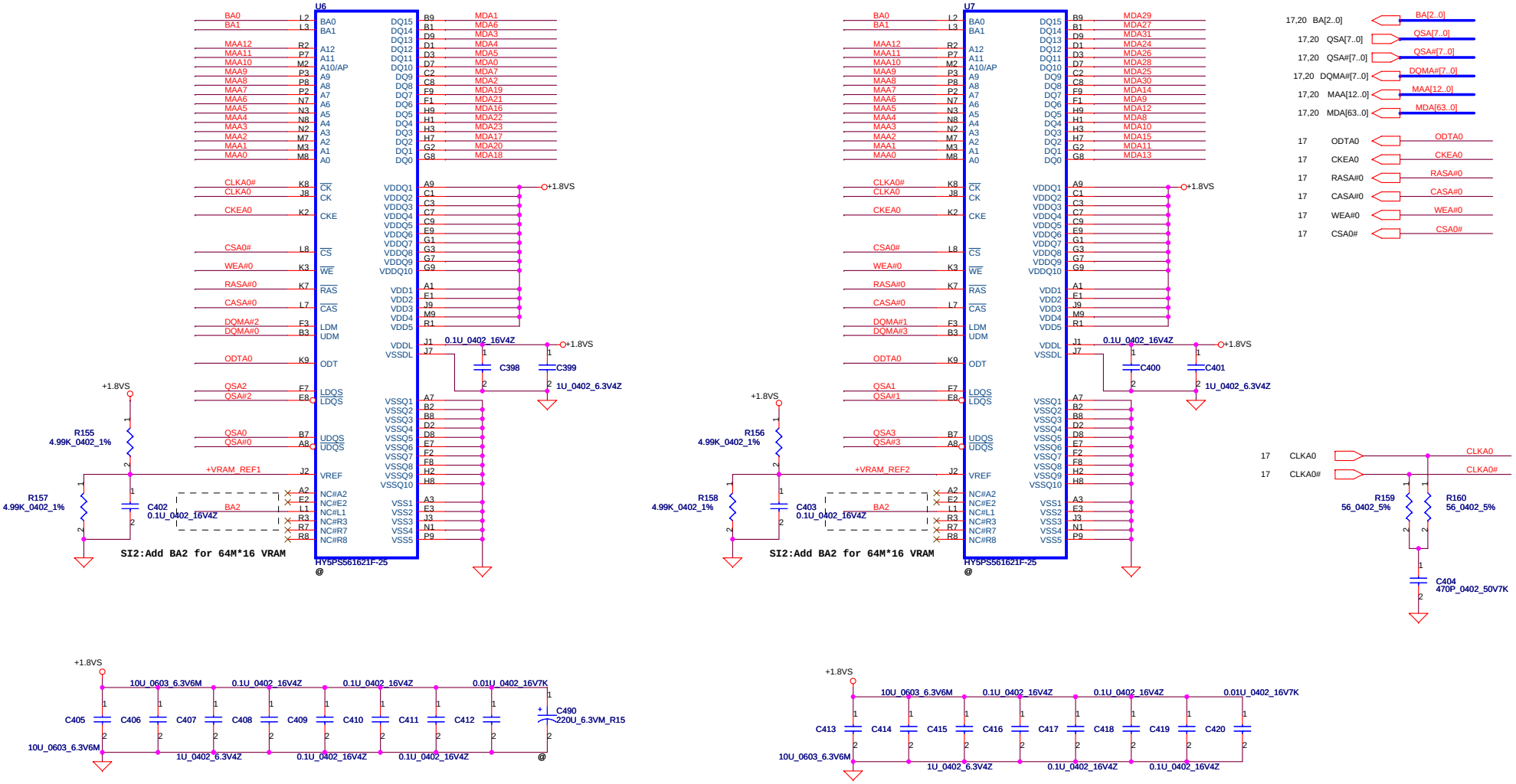

Security Classification	Compal Secret Data			Compal Electronics, Inc.
Issued Date	2006/09/25	Deciphered Date	2006/09/25	Title: M82-S VRAM
				Size: Document Number: LA-4092P Rev: 0.4
				Date: Thursday, February 21, 2008 Sheet 19 of 53

THIS SHEET OF ENGINEERING DRAWING IS THE PROPRIETARY PROPERTY OF COMPAL ELECTRONICS, INC. AND CONTAINS CONFIDENTIAL AND TRADE SECRET INFORMATION. THIS SHEET MAY NOT BE TRANSFERED FROM THE CUSTODY OF THE COMPETENT DIVISION OF R&D DEPARTMENT EXCEPT AS AUTHORIZED BY COMPAL ELECTRONICS, INC. NEITHER THIS SHEET NOR THE INFORMATION IT CONTAINS MAY BE USED BY OR DISCLOSED TO ANY THIRD PARTY WITHOUT PRIOR WRITTEN CONSENT OF COMPAL ELECTRONICS, INC.

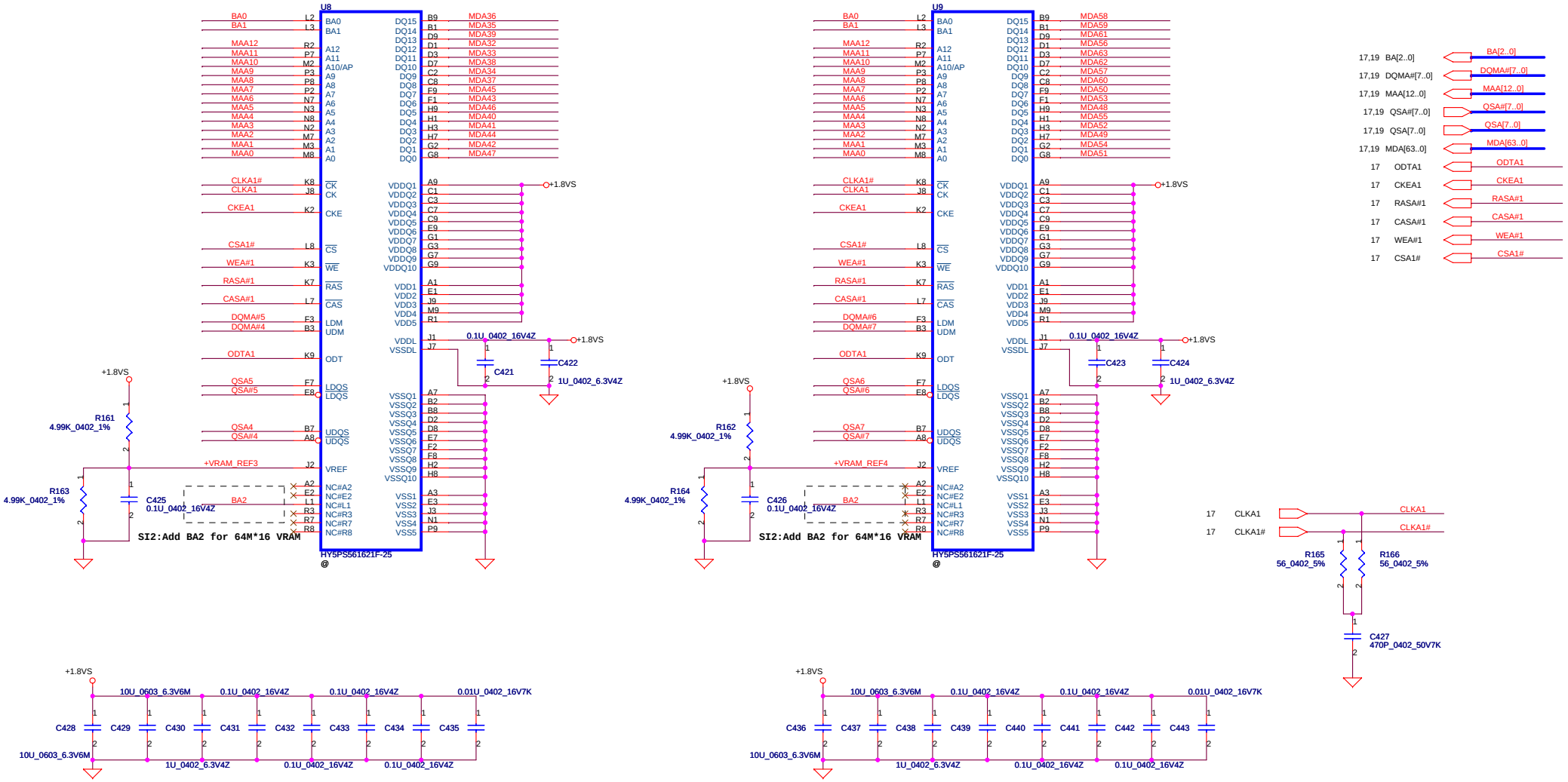

Security Classification	Compal Secret Data		
Issued Date	2006/09/25	Deciphered Date	2006/09/25

THIS SHEET OF ENGINEERING DRAWING IS THE PROPRIETARY PROPERTY OF COMPAL ELECTRONICS, INC. AND CONTAINS CONFIDENTIAL AND TRADE SECRET INFORMATION. THIS SHEET MAY NOT BE TRANSFERED FROM THE CUSTODY OF THE COMPETENT DIVISION OF R&D DEPARTMENT EXCEPT AS AUTHORIZED BY COMPAL ELECTRONICS, INC. NEITHER THIS SHEET NOR THE INFORMATION IT CONTAINS MAY BE USED BY OR DISCLOSED TO ANY THIRD PARTY WITHOUT PRIOR WRITTEN CONSENT OF COMPAL ELECTRONICS, INC.

Compal Electronics, Inc.

Title: **M82-S VRAM**

Size: | Document Number: *LA-4092P* | Rev: 0.4

Date: Thursday, February 21, 2008 | Sheet 20 of 53

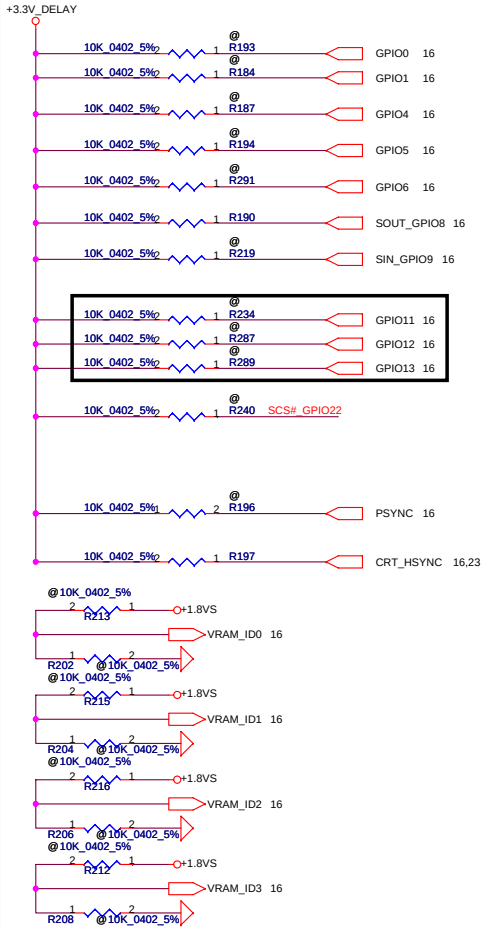

GPIO9 = 0 (BIOS_ROM_EN = 0)	
GPIO[13:11]	MEMORY SIZE
0 0 0	128MB
0 0 1	256MB
0 1 0	64MB
1 0 0	512MB

STRAPS	PIN	DESCRIPTION OF RECOMMENDED SETTING	RECOMMENDED M8X
TX_PWRS_ENB	GPIO0	PCIE FULL TX OUTPUT SWING	0
TX_DEEMPH_EN	GPIO1	PCIE TRANSMITTER DE-EMPHASIS ENABLES	0
BIF_DEBUG_ACCESS	GPIO4	DEBUG SIGNALS MUXED OUT	0
BIF_GEN2_EN_A	GPIO5	PCI-E 5.0GT/s or 2.5 GT/s select	0
DEBUG_ I2C_ENABLE	GPIO6	Internal use only	0
BIF_AUDIO_EN	GPIO8	ENABLE HD AUDIO(M8X)	1
ROMIDCFG[3:0]	GPIO [9,13,12,11]	SERIAL ROM TYPE OR MEMORY APERTURE SIZE SELECT	0 1 0 1
BIOS_ROM EN	GPIO_22_ROMCSB	DISABLE EXTERNAL BIOS ROM	0
BIF_VGA_DIS	PSYNC	VGA ENABLED===0 is enable	0
BIF_HDMI_EN	HSYNC	HDMI ENABLE	1
VRAM_ID[3:0]	DVPDATA (23,22,21,20)		VRAM_ID 3 ,2 ,1 ,0
		Samsung 64Mx16 1.8V	0 0 0 0
		Samsung 32Mx16 1.8V	0 0 0 1
		Hynix 64Mx16 1.8V	0 0 1 0
		Hynix 32Mx16 1.8V	0 0 1 1
		Qimonda 32Mx16 1.8V	0 1 0 0
		Qimonda 64Mx16 1.8V	0 1 0 1

ATI RESERVED CONFIGURATION STRAPS

ALLOW FOR PULLUP PADS FOR THESE STRAPS AND IF THESE GPIOS ARE USED, THEY MUST NOT CONFLICT DURING RESE

GPIO2 GPIO3 GPIO5 GPIO6 DVALID H2SYNC V2SYNC

PULLUP PADS ARE NOT REQUIRED FOR THESE STRAPS BUT IF THESE GPIOS ARE USED, THEY MUST NOT CONFLICT DURING RESET

GENERICC GPIO21_BB_EN GPIO_28_TDO

VGA Thermal Sensor ADM1032ARMZ

Closed to U80

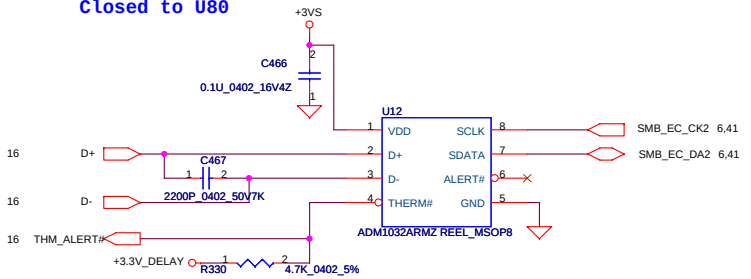

FLASH ROM

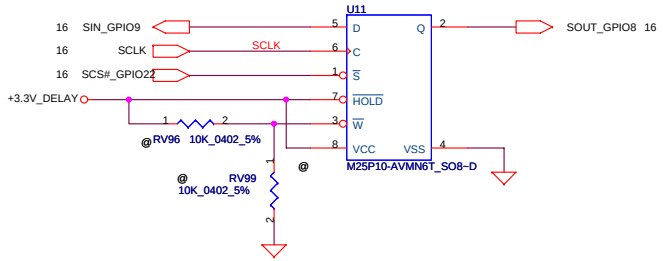

Security Classification	Compal Secret Data		
Issued Date	2006/09/25	Deciphered Date	2006/09/25

THIS SHEET OF ENGINEERING DRAWING IS THE PROPRIETARY PROPERTY OF COMPAL ELECTRONICS, INC. AND CONTAINS CONFIDENTIAL AND TRADE SECRET INFORMATION. THIS SHEET MAY NOT BE TRANSFERED FROM THE CUSTODY OF THE COMPETENT DIVISION OF R&D DEPARTMENT EXCEPT AS AUTHORIZED BY COMPAL ELECTRONICS, INC. NEITHER THIS SHEET NOR THE INFORMATION IT CONTAINS MAY BE USED BY OR DISCLOSED TO ANY THIRD PARTY WITHOUT PRIOR WRITTEN CONSENT OF COMPAL ELECTRONICS, INC.

Compal Electronics, Inc.

Title: **M82-S Filters / Strap**

Size | Document Number: LA-4092P | Rev: 0.3

Date: Thursday, February 21, 2008 | Sheet 21 of 53

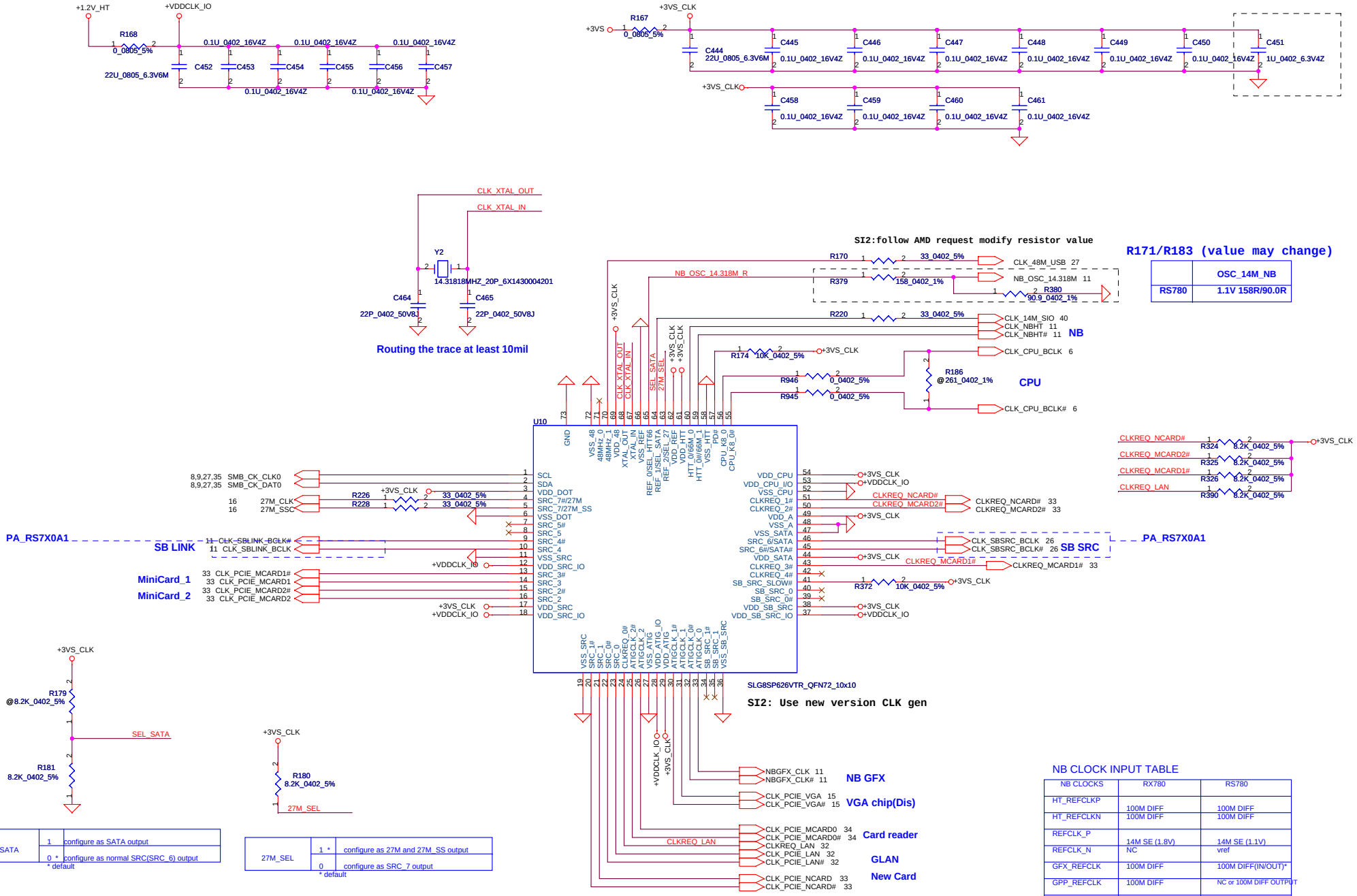

SEL_SATA		
	1	configure as SATA output
	0 *	configure as normal SRC(SRC_6) output

* default

27M_SEL		
	1 *	configure as 27M and 27M_SS output
	0	configure as SRC_7 output

* default

Use voltage divider resistor R379 & R380 to pull low

NB_OSC_14.318M		
	1	configure as single-ended 66MHz output
	0*	configure as differential 100MHz output

* default

NB CLOCK INPUT TABLE

NB CLOCKS	RX780	RS780
HT_REFCLKP	100M DIFF	100M DIFF
HT_REFCLKN	100M DIFF	100M DIFF
REFCLK_P	14M SE (1.8V)	14M SE (1.1V)
REFCLK_N	NC	vref
GFX_REFCLK	100M DIFF	100M DIFF(IN/OUT)*
GPP_REFCLK	100M DIFF	NC or 100M DIFF OUTPUT
GPPSB_REFCLK	100M DIFF	100M DIFF

Security Classification	Compal Secret Data		
Issued Date	2007/08/02	Deciphered Date	2008/08/02

THIS SHEET OF ENGINEERING DRAWING IS THE PROPRIETARY PROPERTY OF COMPAL ELECTRONICS, INC. AND CONTAINS CONFIDENTIAL AND TRADE SECRET INFORMATION. THIS SHEET MAY NOT BE TRANSFERED FROM THE CUSTODY OF THE COMPETENT DIVISION OF R&D DEPARTMENT EXCEPT AS AUTHORIZED BY COMPAL ELECTRONICS, INC. NEITHER THIS SHEET NOR THE INFORMATION IT CONTAINS MAY BE USED BY OR DISCLOSED TO ANY THIRD PARTY WITHOUT PRIOR WRITTEN CONSENT OF COMPAL ELECTRONICS, INC.

Compal Electronics, Inc.

Title: **Clock generator**

Size: Custom | Document Number: LA-4092P | Rev: 0.4

Date: Thursday, February 21, 2008 | Sheet 22 of 53

CRT CONNECTOR

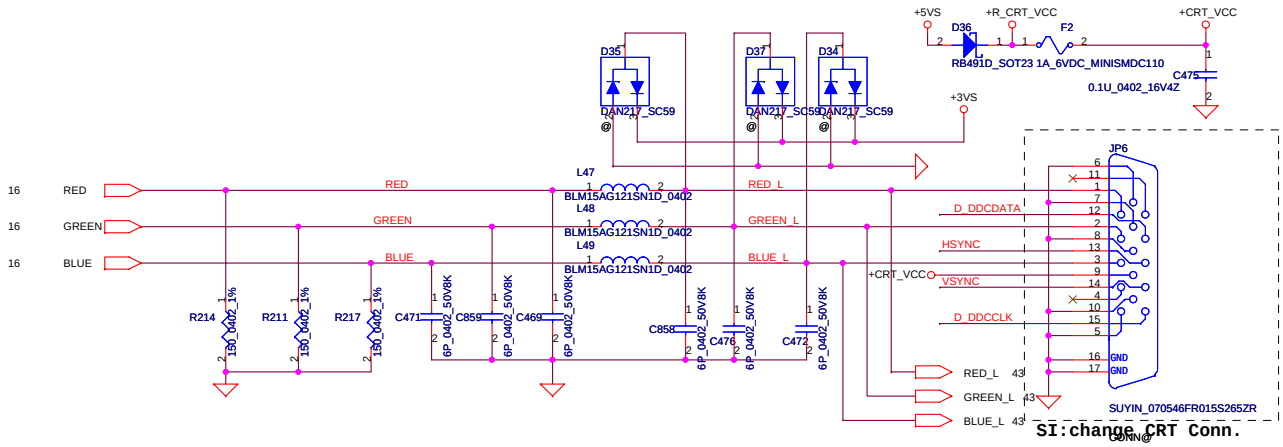

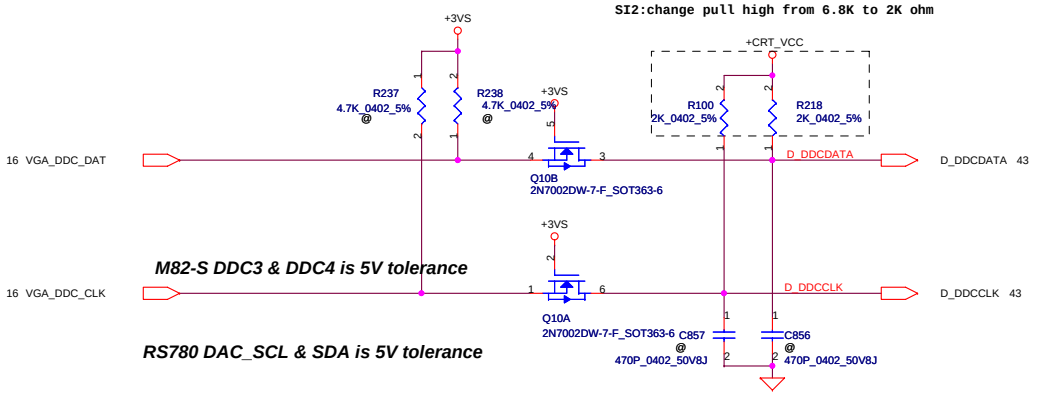

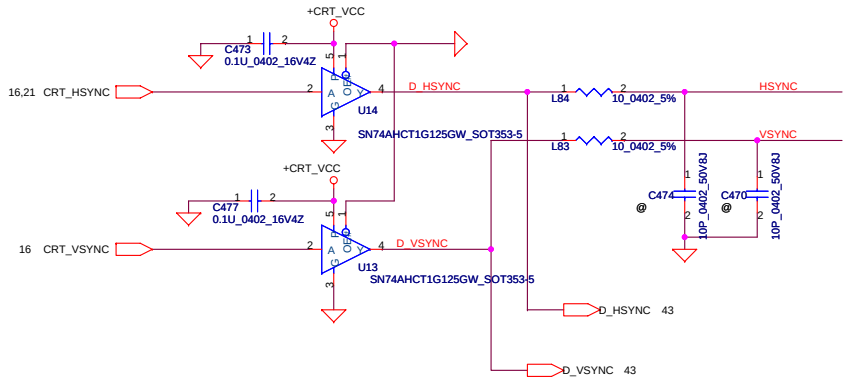

Security Classification	Compal Secret Data		
Issued Date	2007/08/02	Deciphered Date	2008/08/02

THIS SHEET OF ENGINEERING DRAWING IS THE PROPRIETARY PROPERTY OF COMPAL ELECTRONICS, INC. AND CONTAINS CONFIDENTIAL AND TRADE SECRET INFORMATION. THIS SHEET MAY NOT BE TRANSFERED FROM THE CUSTODY OF THE COMPETENT DIVISION OF R&D DEPARTMENT EXCEPT AS AUTHORIZED BY COMPAL ELECTRONICS, INC. NEITHER THIS SHEET NOR THE INFORMATION IT CONTAINS MAY BE USED BY OR DISCLOSED TO ANY THIRD PARTY WITHOUT PRIOR WRITTEN CONSENT OF COMPAL ELECTRONICS, INC.

Compal Electronics, Inc.

Title: **CRT Connector**

Size: Custom | Document Number: LA-4092P | Rev: 0.4

Date: Thursday, February 21, 2008 | Sheet 23 of 53

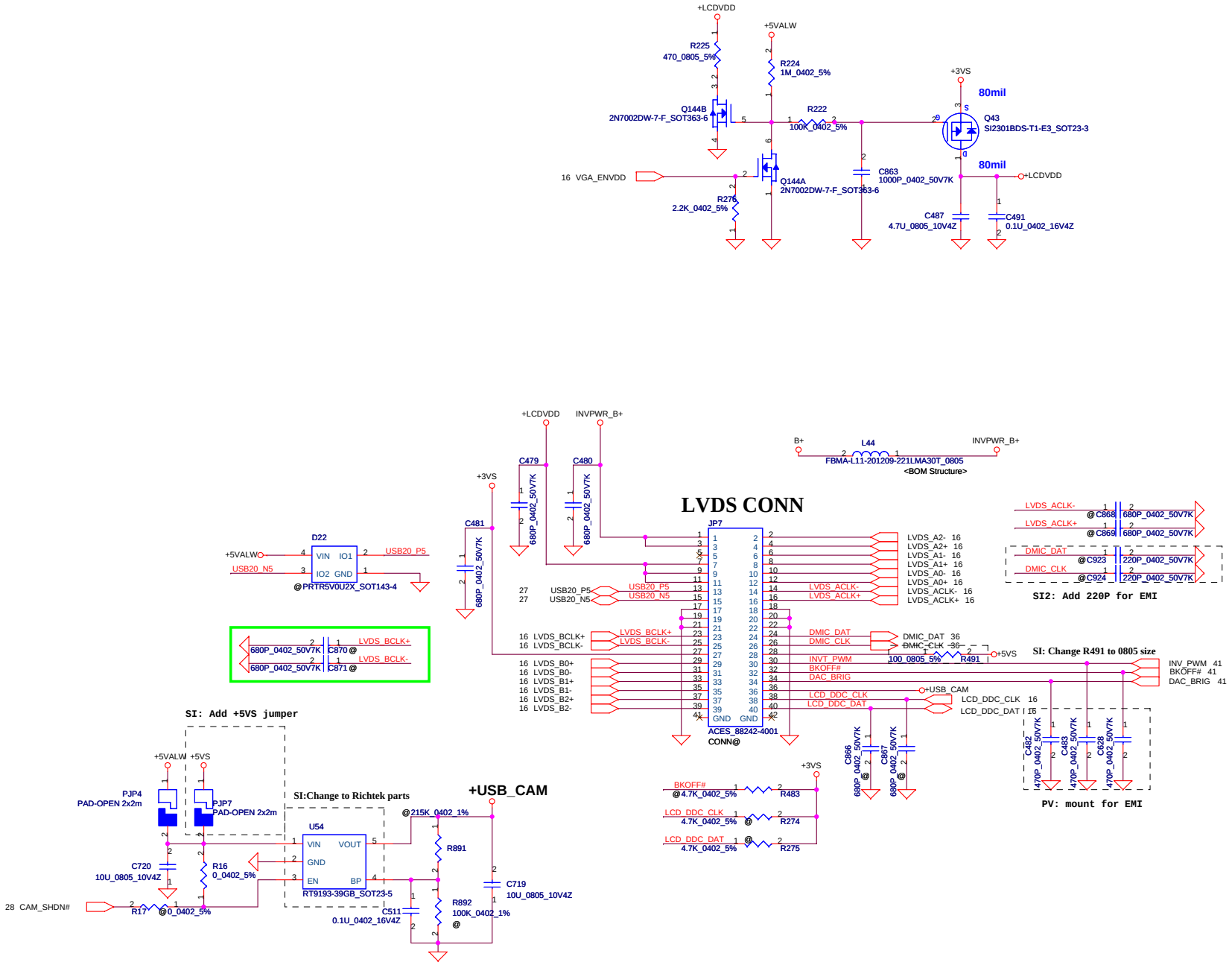

Security Classification	Compal Secret Data		
Issued Date	2007/08/02	Deciphered Date	2008/08/02

THIS SHEET OF ENGINEERING DRAWING IS THE PROPRIETARY PROPERTY OF COMPAL ELECTRONICS, INC. AND CONTAINS CONFIDENTIAL AND TRADE SECRET INFORMATION. THIS SHEET MAY NOT BE TRANSFERED FROM THE CUSTODY OF THE COMPETENT DIVISION OF R&D DEPARTMENT EXCEPT AS AUTHORIZED BY COMPAL ELECTRONICS, INC. NEITHER THIS SHEET NOR THE INFORMATION IT CONTAINS MAY BE USED BY OR DISCLOSED TO ANY THIRD PARTY WITHOUT PRIOR WRITTEN CONSENT OF COMPAL ELECTRONICS, INC.

Compal Electronics, Inc.

Title: **LCD CONN.**

Size	Document Number	Rev
Custom	LA-4092P	0.4

Date: Thursday, February 21, 2008 | Sheet 24 of 53

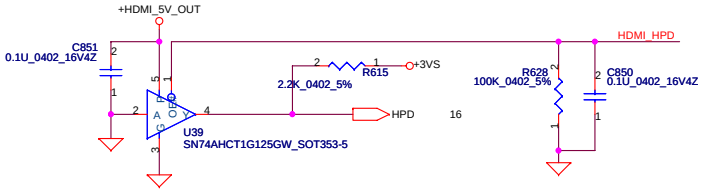

SI2:change pull high from 6.8K to 2K ohm

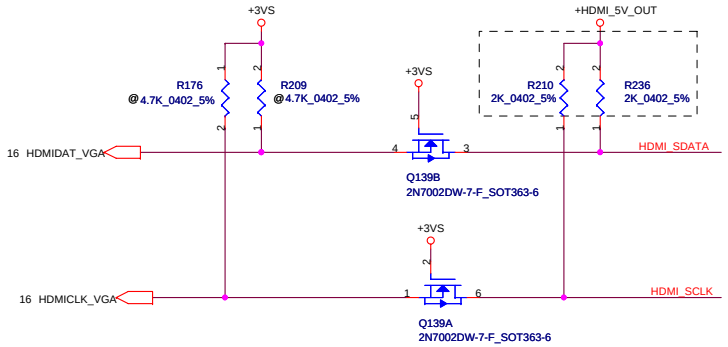

C:Chg. PN to SB770020010.

MP:Update D10 to meet HDMI.

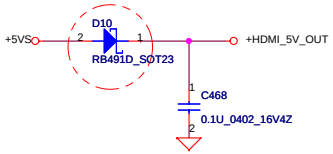

SI:Add R6161~R624 for EMI requset

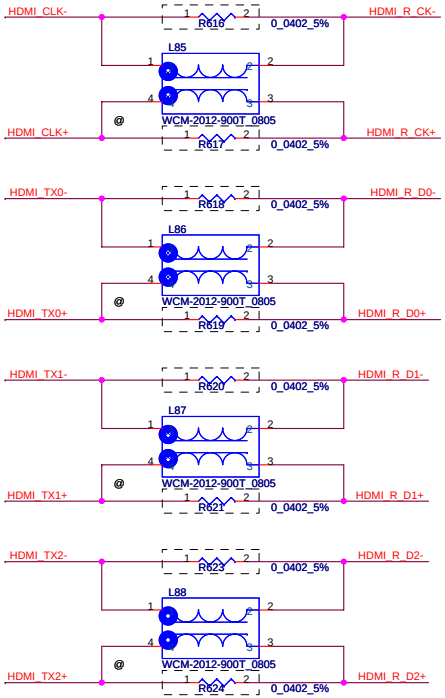

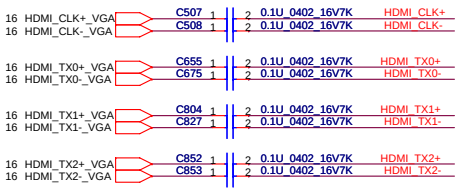

HDMI Connector

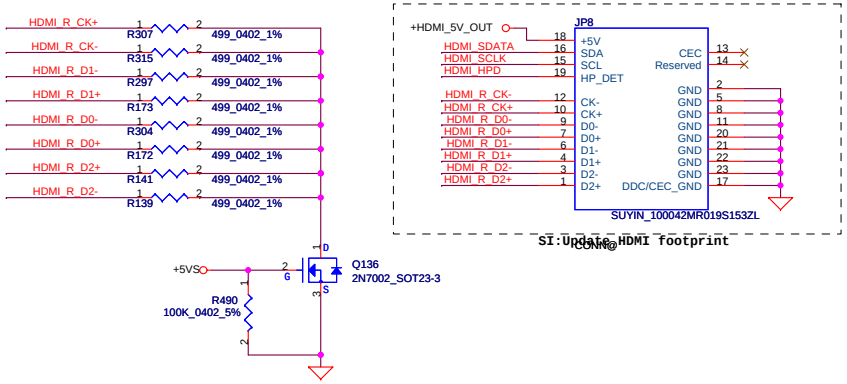

SI:Update HDMI footprint

Security Classification	Compal Secret Data		
Issued Date	2007/08/02	Deciphered Date	2008/08/02

THIS SHEET OF ENGINEERING DRAWING IS THE PROPRIETARY PROPERTY OF COMPAL ELECTRONICS, INC. AND CONTAINS CONFIDENTIAL AND TRADE SECRET INFORMATION. THIS SHEET MAY NOT BE TRANSFERED FROM THE CUSTODY OF THE COMPETENT DIVISION OF R&D DEPARTMENT EXCEPT AS AUTHORIZED BY COMPAL ELECTRONICS, INC. NEITHER THIS SHEET NOR THE INFORMATION IT CONTAINS MAY BE USED BY OR DISCLOSED TO ANY THIRD PARTY WITHOUT PRIOR WRITTEN CONSENT OF COMPAL ELECTRONICS, INC.

Compal Electronics, Inc.

Title: **HDMI**

Size: Custom | Document Number: LA-4092P | Rev: 0.4

Date: Thursday, February 21, 2008 | Sheet 25 of 53

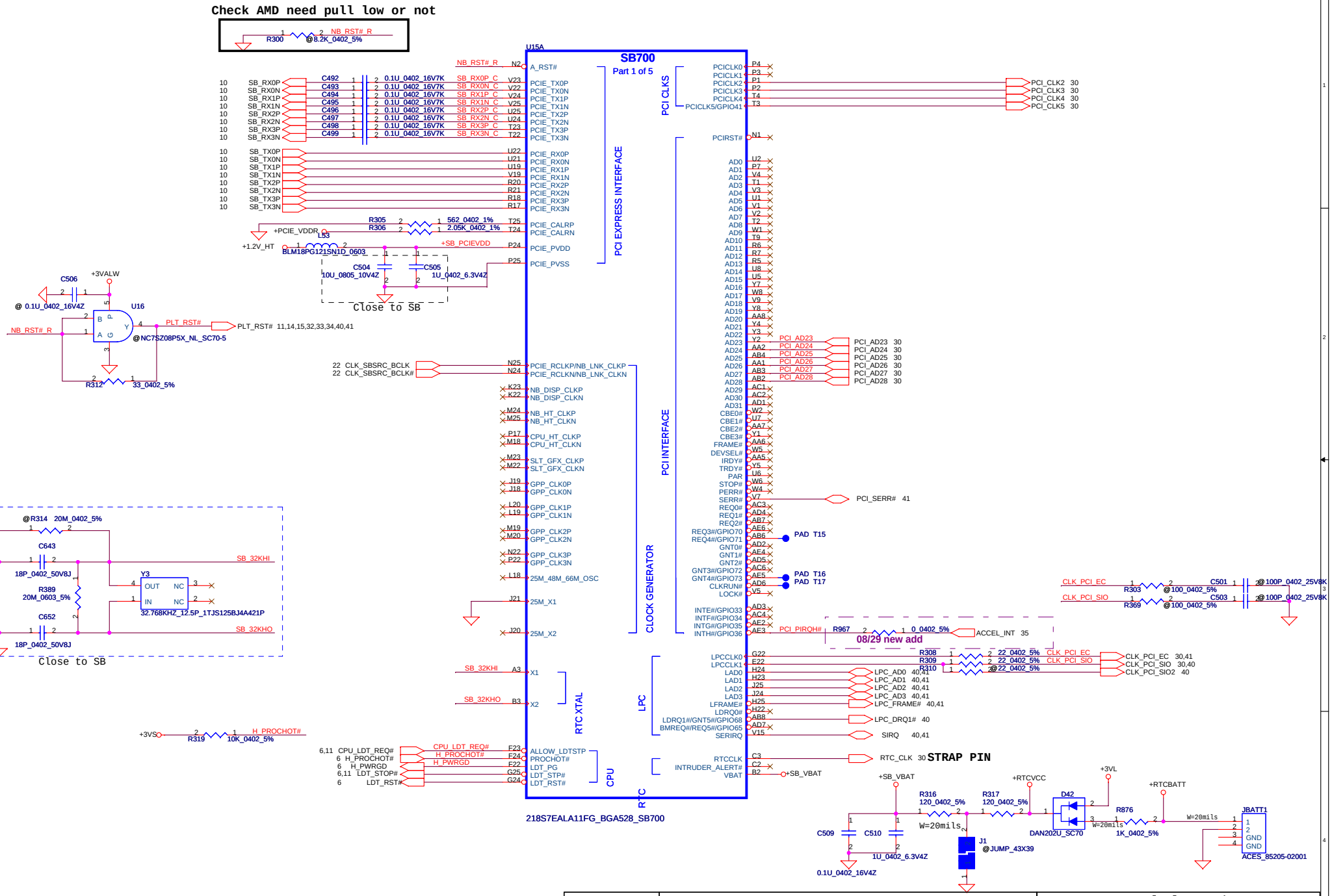

Security Classification	Compal Secret Data		
Issued Date	2007/08/02	Deciphered Date	2008/08/02

THIS SHEET OF ENGINEERING DRAWING IS THE PROPRIETARY PROPERTY OF COMPAL ELECTRONICS, INC. AND CONTAINS CONFIDENTIAL AND TRADE SECRET INFORMATION. THIS SHEET MAY NOT BE TRANSFERED FROM THE CUSTODY OF THE COMPETENT DIVISION OF R&D DEPARTMENT EXCEPT AS AUTHORIZED BY COMPAL ELECTRONICS, INC. NEITHER THIS SHEET NOR THE INFORMATION IT CONTAINS MAY BE USED BY OR DISCLOSED TO ANY THIRD PARTY WITHOUT PRIOR WRITTEN CONSENT OF COMPAL ELECTRONICS, INC.

Compal Electronics, Inc.

Title: **SB700-PCIE/PCI/ACPI/LPC/RTC**

Size	Document Number	Rev
Custom	LA-4092P	0.4

Date: Thursday, February 21, 2008 | Sheet 26 of 53

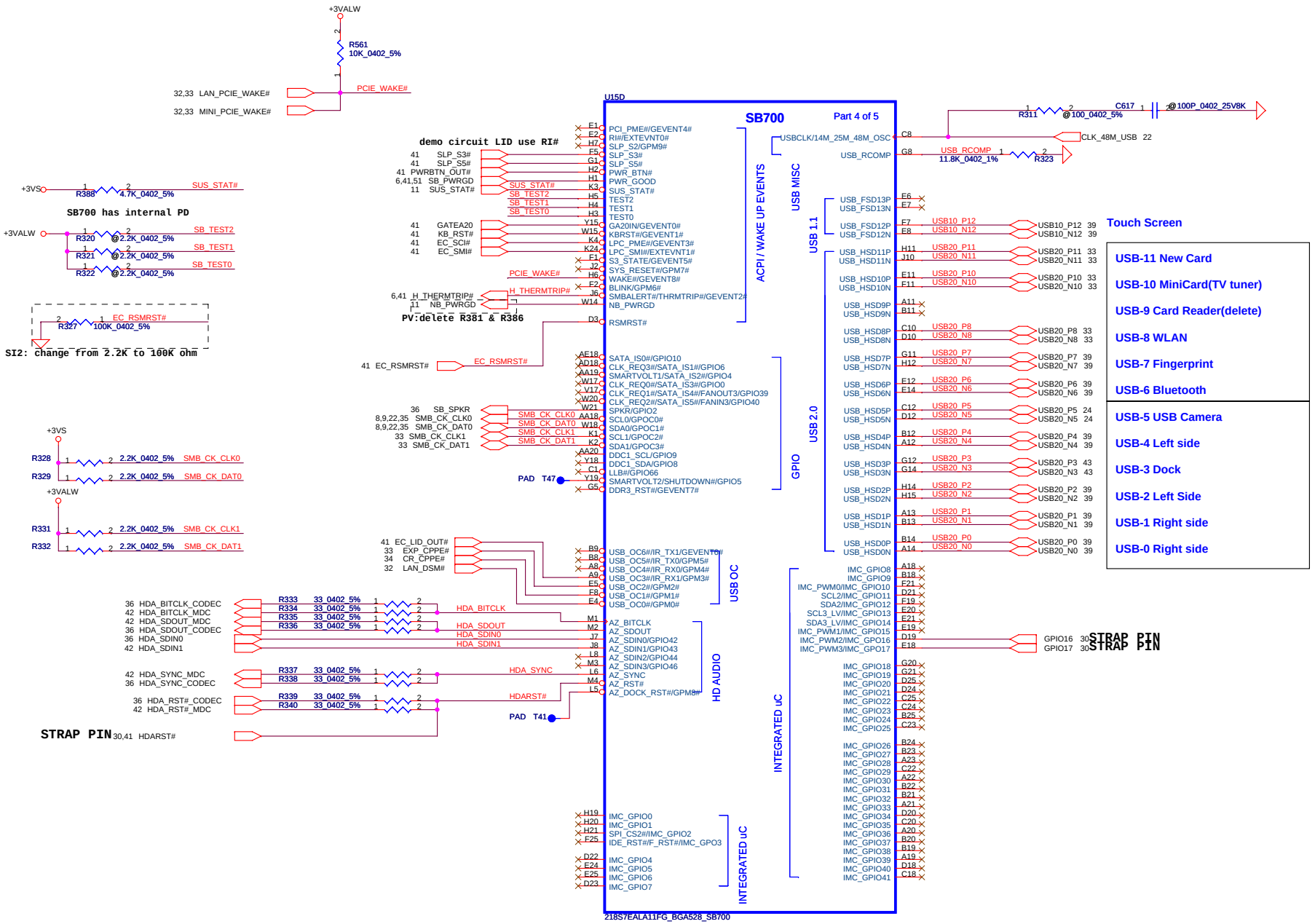

Security Classification	Compal Secret Data		
Issued Date	2007/08/02	Deciphered Date	2008/08/02

THIS SHEET OF ENGINEERING DRAWING IS THE PROPRIETARY PROPERTY OF COMPAL ELECTRONICS, INC. AND CONTAINS CONFIDENTIAL AND TRADE SECRET INFORMATION. THIS SHEET MAY NOT BE TRANSFERED FROM THE CUSTODY OF THE COMPETENT DIVISION OF R&D DEPARTMENT EXCEPT AS AUTHORIZED BY COMPAL ELECTRONICS, INC. NEITHER THIS SHEET NOR THE INFORMATION IT CONTAINS MAY BE USED BY OR DISCLOSED TO ANY THIRD PARTY WITHOUT PRIOR WRITTEN CONSENT OF COMPAL ELECTRONICS, INC.

Compal Electronics, Inc.

Title: **SB700 USB/AC97**

Size: Custom | Document Number: LA-4092P | Rev: 0.4

Date: Thursday, February 21, 2008 | Sheet 27 of 53

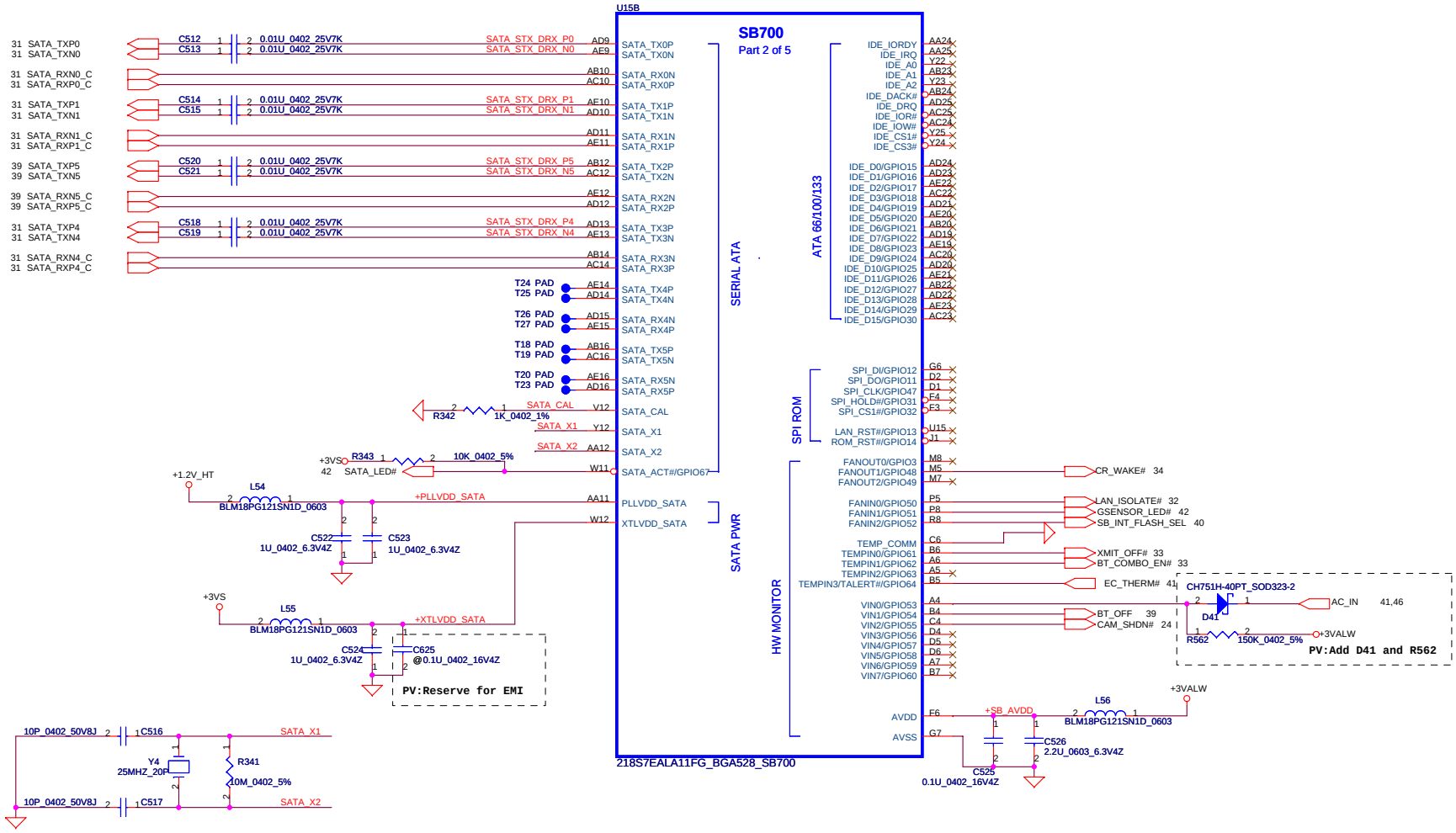

Security Classification	Compal Secret Data		
Issued Date	2007/08/02	Deciphered Date	2008/08/02

THIS SHEET OF ENGINEERING DRAWING IS THE PROPRIETARY PROPERTY OF COMPAL ELECTRONICS, INC. AND CONTAINS CONFIDENTIAL AND TRADE SECRET INFORMATION. THIS SHEET MAY NOT BE TRANSFERED FROM THE CUSTODY OF THE COMPETENT DIVISION OF R&D DEPARTMENT EXCEPT AS AUTHORIZED BY COMPAL ELECTRONICS, INC. NEITHER THIS SHEET NOR THE INFORMATION IT CONTAINS MAY BE USED BY OR DISCLOSED TO ANY THIRD PARTY WITHOUT PRIOR WRITTEN CONSENT OF COMPAL ELECTRONICS, INC.

Compal Electronics, Inc.

Title: **SB700 SATA/IDE/SPI**

Size: Custom | Document Number: LA-4092P | Rev: 0.4

Date: Thursday, February 21, 2008 | Sheet 28 of 53

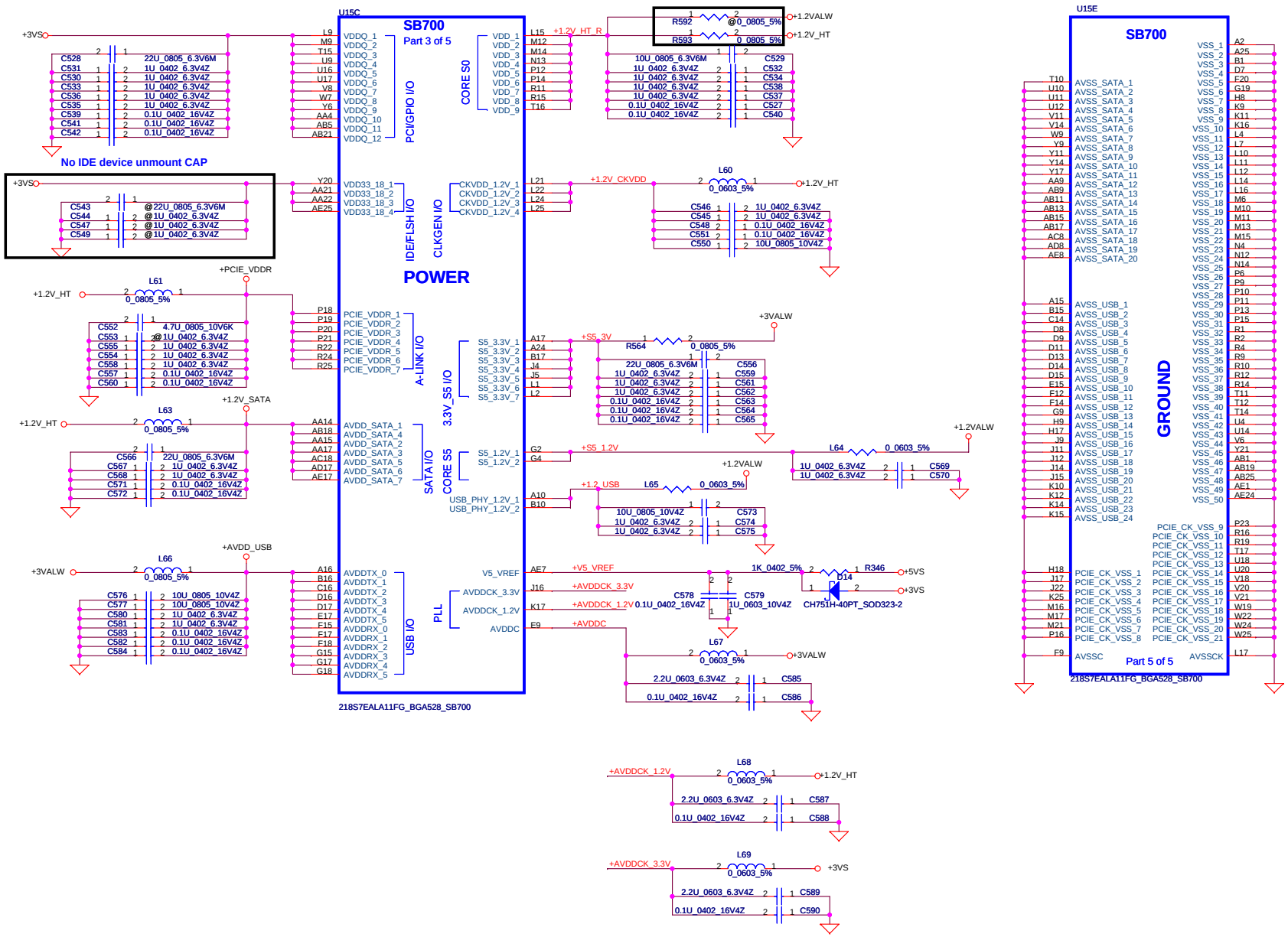

Security Classification	Compal Secret Data		
Issued Date	2007/08/02	Deciphered Date	2008/08/02

THIS SHEET OF ENGINEERING DRAWING IS THE PROPRIETARY PROPERTY OF COMPAL ELECTRONICS, INC. AND CONTAINS CONFIDENTIAL AND TRADE SECRET INFORMATION. THIS SHEET MAY NOT BE TRANSFERED FROM THE CUSTODY OF THE COMPETENT DIVISION OF R&D DEPARTMENT EXCEPT AS AUTHORIZED BY COMPAL ELECTRONICS, INC. NEITHER THIS SHEET NOR THE INFORMATION IT CONTAINS MAY BE USED BY OR DISCLOSED TO ANY THIRD PARTY WITHOUT PRIOR WRITTEN CONSENT OF COMPAL ELECTRONICS, INC.

Compal Electronics, Inc.

Title: **Cover Sheet**

Size	Document Number	Rev
Custom	LA-4092P	0.4

Date: Thursday, February 21, 2008 | Sheet 29 of 53

REQUIRED STRAPS

NOTE: SB700 HAS INTERNAL 15K PULL UP RESISTOR FOR RTC_CLK

	PCI_CLK2	PCI_CLK3	PCI_CLK4	PCI_CLK5	LPC_CLK0	LPC_CLK1	RTC_CLK	AZ_RST_CD#	GP17 GP16
PULL HIGH	BOOTFAIL TIMER ENABLED	USE DEBUG STRAPS	RESERVED	RESERVED	ENABLE PCI MEM BOOT	CLKGEN ENABLED	INTERNAL RTC DEFAULT	EC ENABLED	Internal pull up H,H = Reserved H,L = SPI ROM L,H = LPC ROM (Default) L,L = FWH ROM
PULL LOW	BOOTFAIL TIMER DISABLED DEFAULT	IGNORE DEBUG STRAPS DEFAULT			DISABLE PCI MEM BOOT DEFAULT	CLKGEN DISABLED DEFAULT	EXT. RTC (PD on X1, apply 32KHz to RTC_CLK)	EC DISABLED DEFAULT	

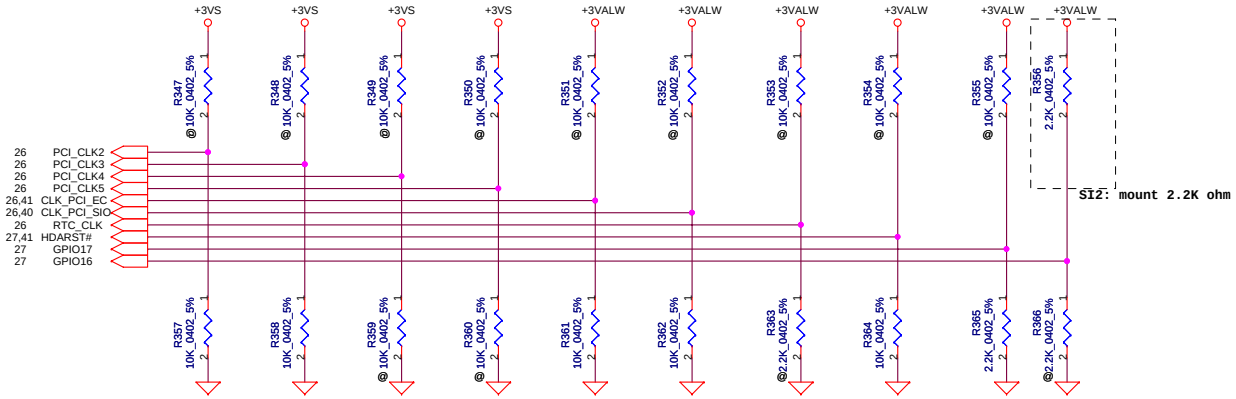

DEBUG STRAPS

SB700 HAS 15K INTERNAL PU FOR PCI_AD[28:23]

	PCI_AD28	PCI_AD27	PCI_AD26	PCI_AD25	PCI_AD24	PCI_AD23
PULL HIGH	USE LONG RESET DEFAULT	USE PCI PLL DEFAULT	USE ACPI BCLK DEFAULT	USE IDE PLL DEFAULT	USE DEFAULT PCIE STRAPS DEFAULT	RESERVED
PULL LOW	USE SHORT RESET	BYPASS PCI PLL	BYPASS ACPI BCLK	BYPASS IDE PLL	USE EEPROM PCIE STRAPS	

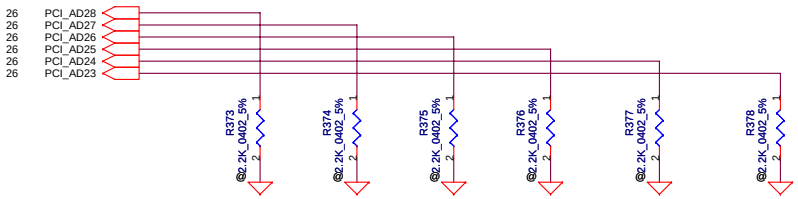

Security Classification	Compal Secret Data		
Issued Date	2007/08/02	Deciphered Date	2008/08/02

THIS SHEET OF ENGINEERING DRAWING IS THE PROPRIETARY PROPERTY OF COMPAL ELECTRONICS, INC. AND CONTAINS CONFIDENTIAL AND TRADE SECRET INFORMATION. THIS SHEET MAY NOT BE TRANSFERED FROM THE CUSTODY OF THE COMPETENT DIVISION OF R&D DEPARTMENT EXCEPT AS AUTHORIZED BY COMPAL ELECTRONICS, INC. NEITHER THIS SHEET NOR THE INFORMATION IT CONTAINS MAY BE USED BY OR DISCLOSED TO ANY THIRD PARTY WITHOUT PRIOR WRITTEN CONSENT OF COMPAL ELECTRONICS, INC.

Compal Electronics, Inc.

Title: **SB700 STRAPS**

Size: Custom | Document Number: LA-4092P | Rev: 0.4

Date: Thursday, February 21, 2008 | Sheet 30 of 53

HDD Connector

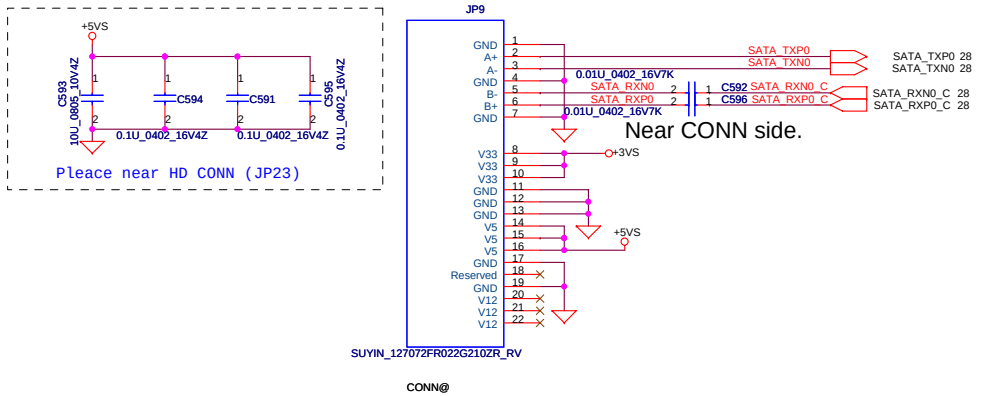

2nd HDD Connector-option

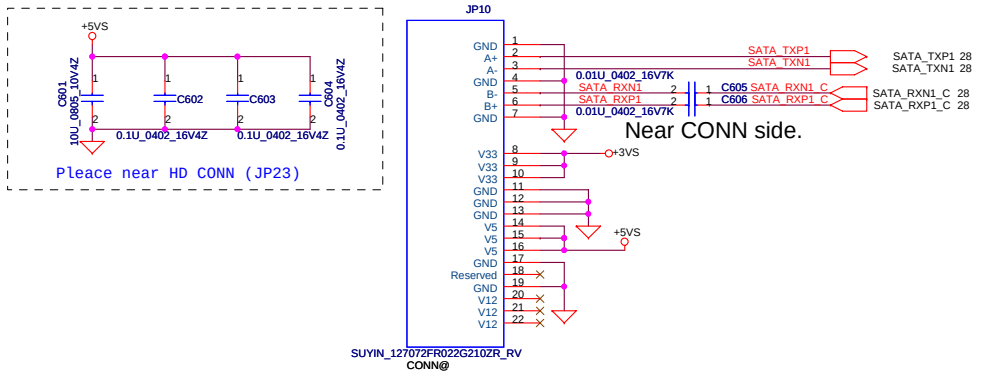

CD-ROM Connector

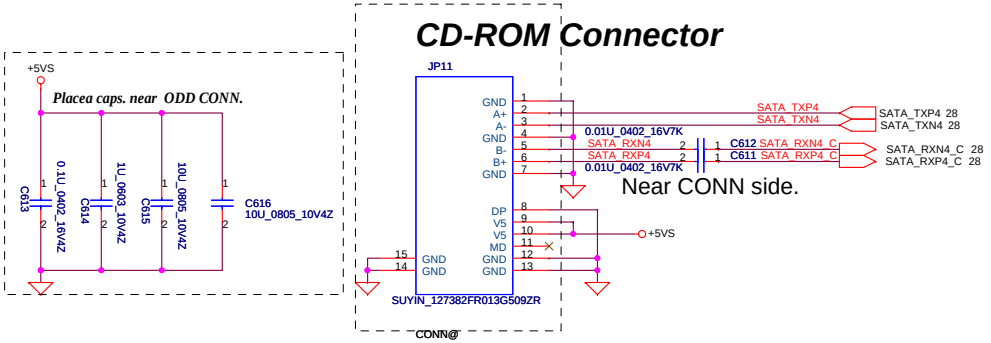

SI: Update ODD footprint to fix pin reverse issue

Security Classification	Compal Secret Data		
Issued Date	2007/08/02	Deciphered Date	2008/08/02

THIS SHEET OF ENGINEERING DRAWING IS THE PROPRIETARY PROPERTY OF COMPAL ELECTRONICS, INC. AND CONTAINS CONFIDENTIAL AND TRADE SECRET INFORMATION. THIS SHEET MAY NOT BE TRANSFERED FROM THE CUSTODY OF THE COMPETENT DIVISION OF R&D DEPARTMENT EXCEPT AS AUTHORIZED BY COMPAL ELECTRONICS, INC. NEITHER THIS SHEET NOR THE INFORMATION IT CONTAINS MAY BE USED BY OR DISCLOSED TO ANY THIRD PARTY WITHOUT PRIOR WRITTEN CONSENT OF COMPAL ELECTRONICS, INC.

Compal Electronics, Inc.

Title: **HDD/CDROM**

Size: Custom | Document Number: LA-4092P | Rev: 0.4

Date: Thursday, February 21, 2008 | Sheet 31 of 53

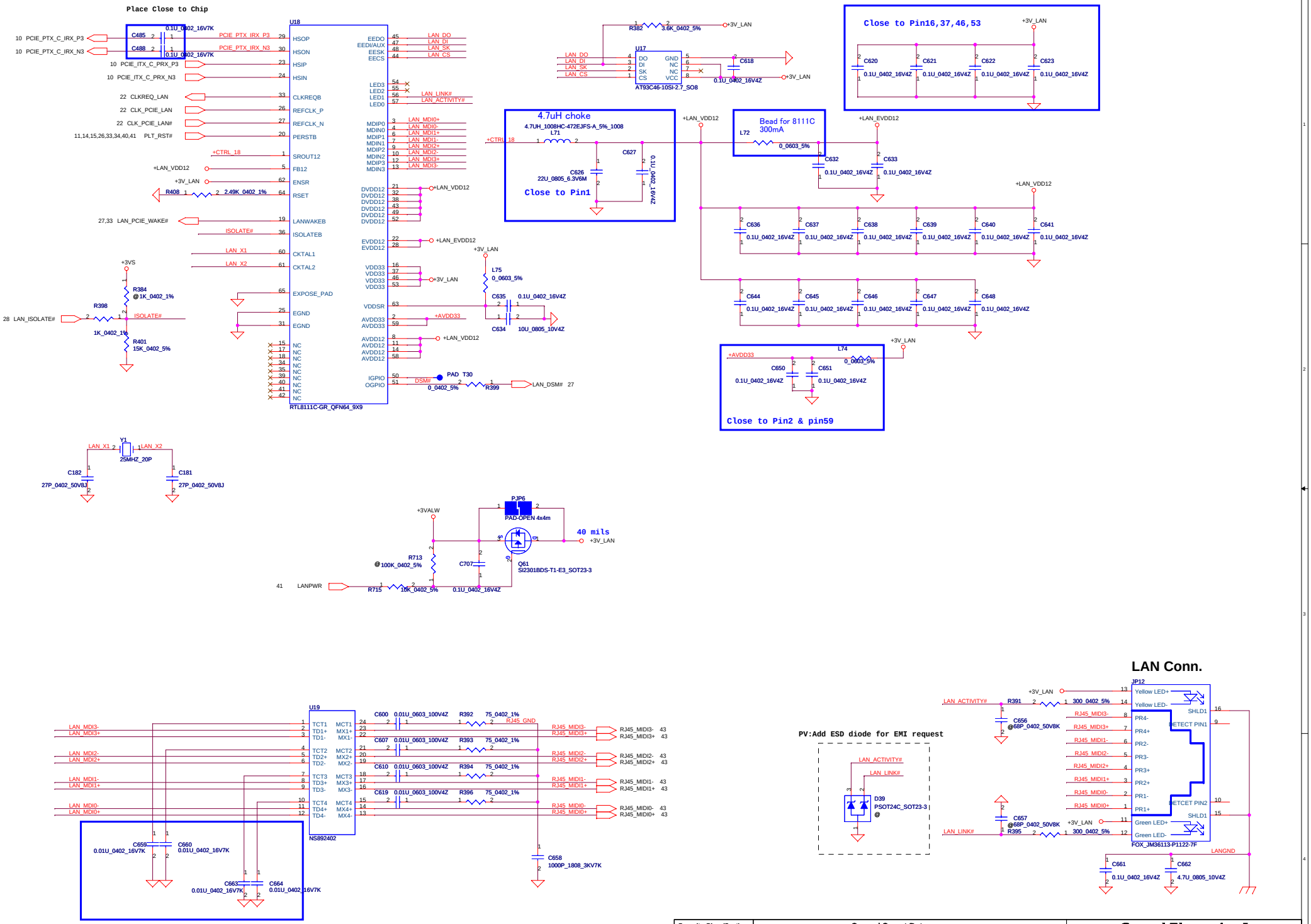

Security Classification	Compal Secret Data		
Issued Date	2007/08/02	Deciphered Date	2008/08/02

THIS SHEET OF ENGINEERING DRAWING IS THE PROPRIETARY PROPERTY OF COMPAL ELECTRONICS, INC. AND CONTAINS CONFIDENTIAL AND TRADE SECRET INFORMATION. THIS SHEET MAY NOT BE TRANSFERED FROM THE CUSTODY OF THE COMPETENT DIVISION OF R&D DEPARTMENT EXCEPT AS AUTHORIZED BY COMPAL ELECTRONICS, INC. NEITHER THIS SHEET NOR THE INFORMATION IT CONTAINS MAY BE USED BY OR DISCLOSED TO ANY THIRD PARTY WITHOUT PRIOR WRITTEN CONSENT OF COMPAL ELECTRONICS, INC.

Compal Electronics, Inc.

Title: **RTL8111C/8102E 10/100/1000 LAN**

Size	Document Number	Rev
C	LA-4092P	0.4

Date: Thursday, February 21, 2008 | Sheet 32 of 53

Mini Card---TV tuner

SI2: chagne power plan from +3VALW to +3VS_TV

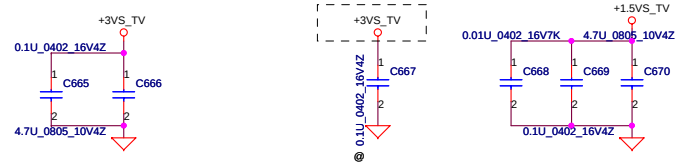

SI: Exchange TV & WLAN minicard location

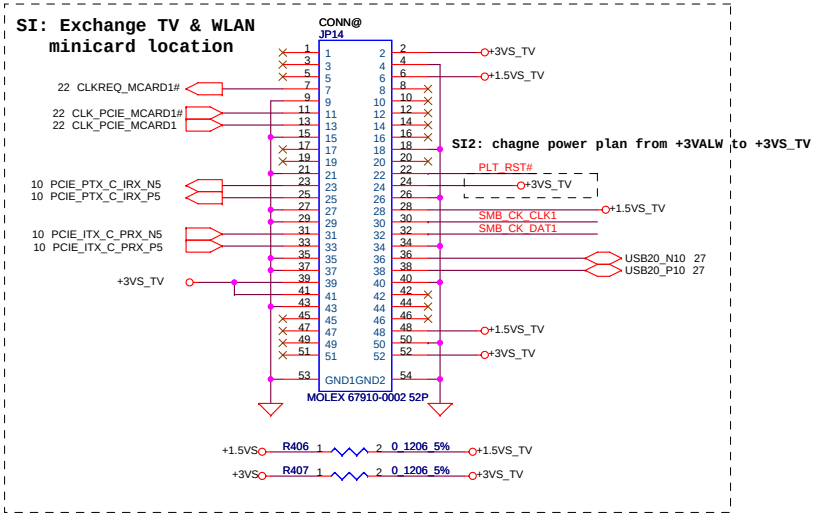

SI2: chagne power plan from +3VALW to +3VS_TV

New Card

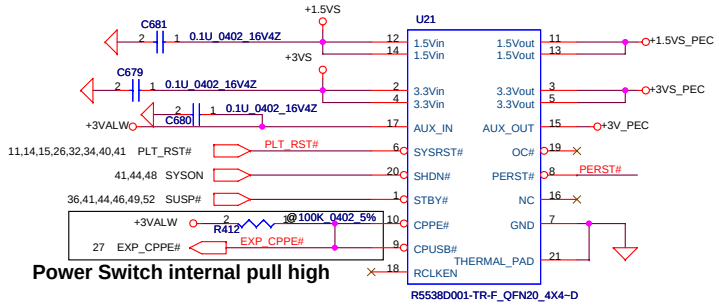

Power Switch internal pull high

USE TI TPS2231MRGPR

Mini-Express Card---WLAN

Near to Express Card slot.

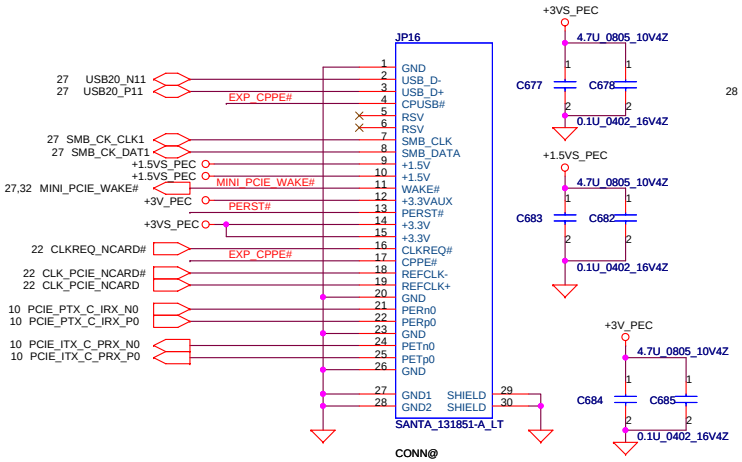

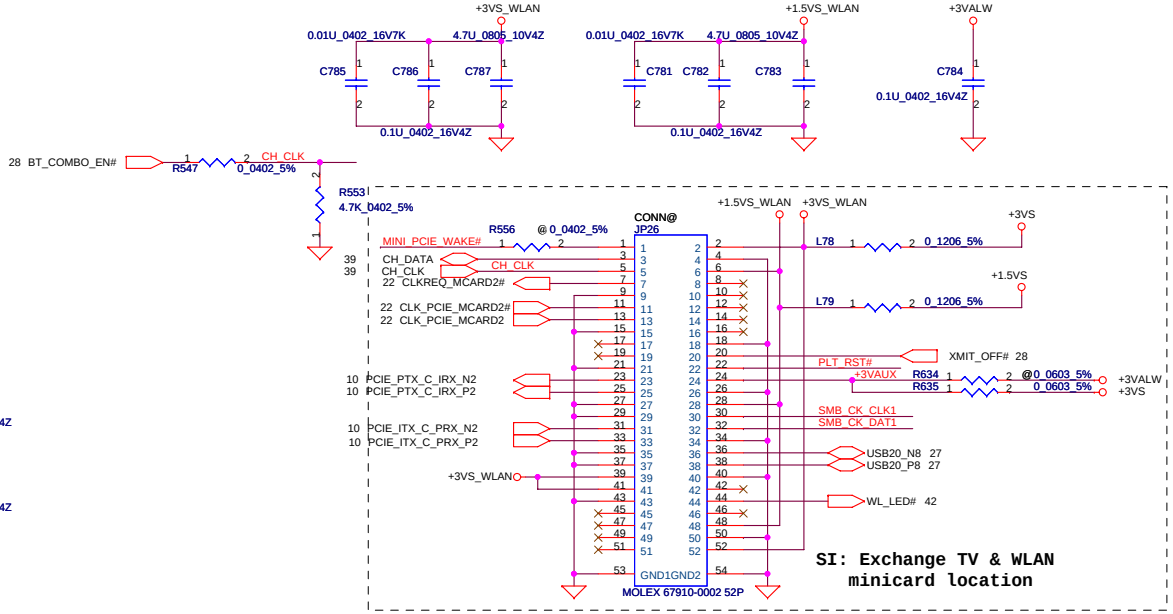

SI: Exchange TV & WLAN minicard location

Security Classification	Compal Secret Data		
Issued Date	2007/08/02	Deciphered Date	2008/08/02

THIS SHEET OF ENGINEERING DRAWING IS THE PROPRIETARY PROPERTY OF COMPAL ELECTRONICS, INC. AND CONTAINS CONFIDENTIAL AND TRADE SECRET INFORMATION. THIS SHEET MAY NOT BE TRANSFERED FROM THE CUSTODY OF THE COMPETENT DIVISION OF R&D DEPARTMENT EXCEPT AS AUTHORIZED BY COMPAL ELECTRONICS, INC. NEITHER THIS SHEET NOR THE INFORMATION IT CONTAINS MAY BE USED BY OR DISCLOSED TO ANY THIRD PARTY WITHOUT PRIOR WRITTEN CONSENT OF COMPAL ELECTRONICS, INC.

Compal Electronics, Inc.

Title: **Mini-Card/Mini-PCI/Express Card**

Size	Document Number	Rev
Custom	LA-4092P	0.4

Date: Thursday, February 21, 2008 | Sheet 33 of 53

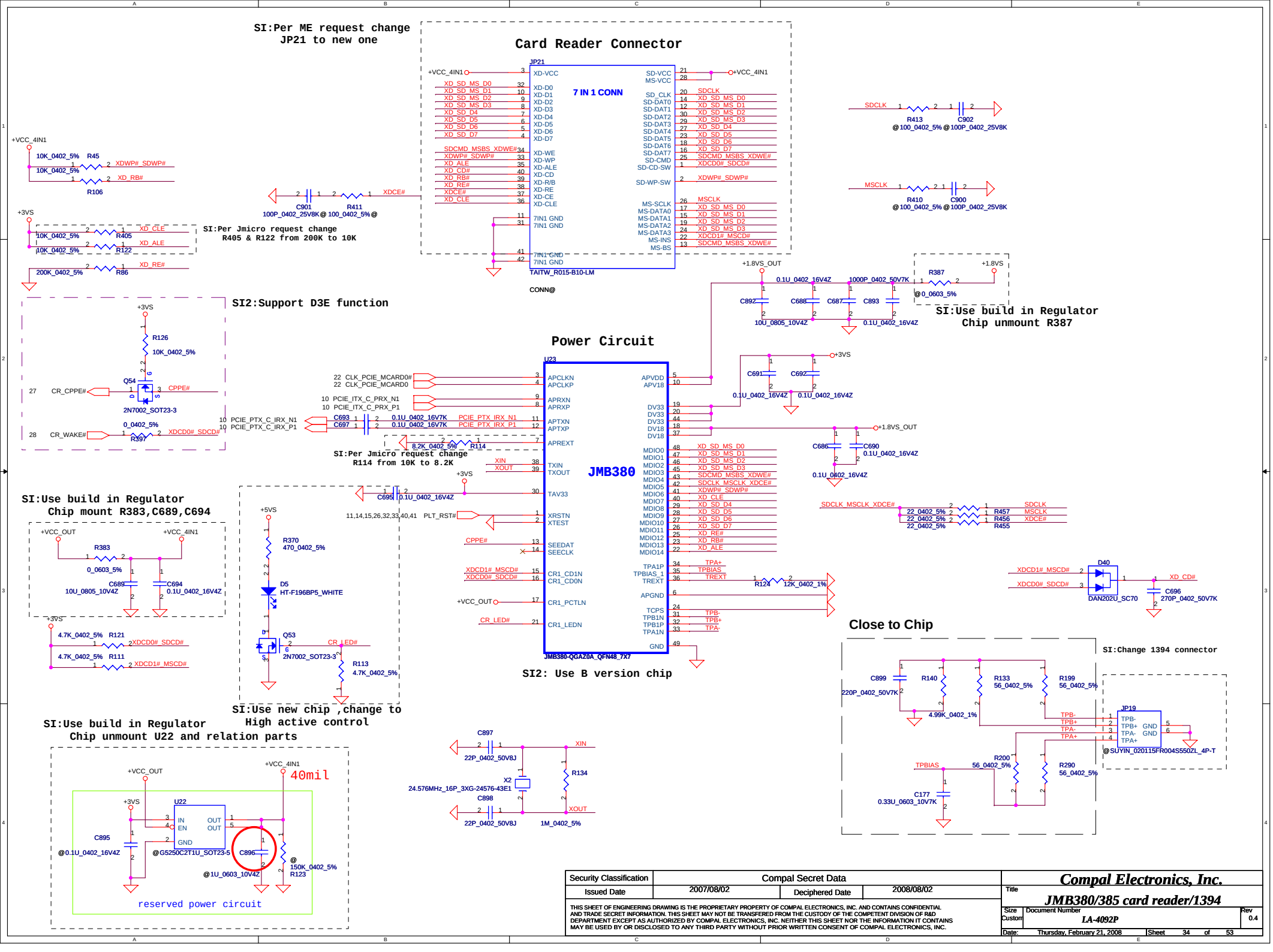
SI:Per ME request change
JP21 to new one
Card Reader Connector
JP21
7 IN 1 CONN
TAITW_R015-B10-LM
CONN@
SI:Per Jmicro request change
R405 & R122 from 200K to 10K
SI2:Support D3E function
Power Circuit
JMB380
U23
JMB380-QGAZ0A_QFN48_7X7
SI:Use build in Regulator
Chip unmount R387
SI:Per Jmicro request change
R114 from 10K to 8.2K
SI:Use build in Regulator
Chip mount R383,C689,C694
SI2: Use B version chip
SI:Use new chip ,change to
High active control
SI:Use build in Regulator
Chip unmount U22 and relation parts
40mil
reserved power circuit
Close to Chip
SI:Change 1394 connector
Compal Secret Data
Issued Date 2007/08/02
Deciphered Date 2008/08/02
Compal Electronics, Inc.
JMB380/385 card reader/1394
LA-4092P
Rev 0.4
Thursday, February 21, 2008
Sheet 34 of 53

ACCELEROMETER

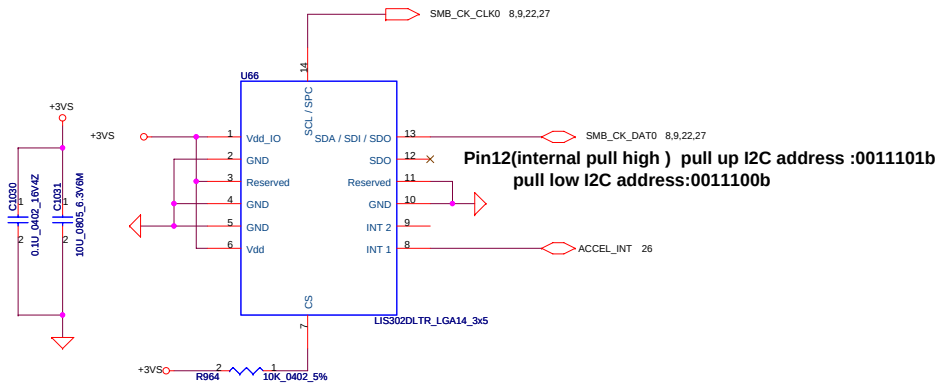

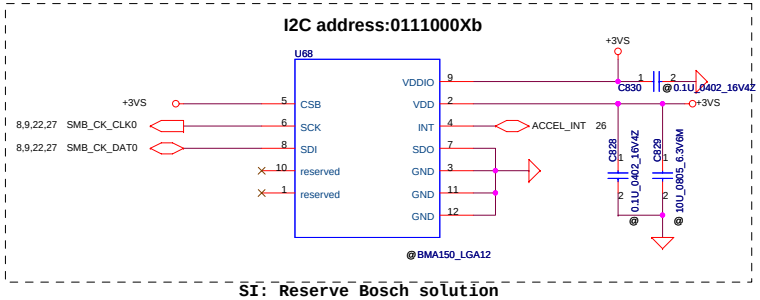

SI: Reserve Bosch solution

Security Classification	Compal Secret Data		
Issued Date	2006/08/04	Deciphered Date	2006/10/06

THIS SHEET OF ENGINEERING DRAWING IS THE PROPRIETARY PROPERTY OF COMPAL ELECTRONICS, INC. AND CONTAINS CONFIDENTIAL AND TRADE SECRET INFORMATION. THIS SHEET MAY NOT BE TRANSFERED FROM THE CUSTODY OF THE COMPETENT DIVISION OF R&D DEPARTMENT EXCEPT AS AUTHORIZED BY COMPAL ELECTRONICS, INC. NEITHER THIS SHEET NOR THE INFORMATION IT CONTAINS MAY BE USED BY OR DISCLOSED TO ANY THIRD PARTY WITHOUT PRIOR WRITTEN CONSENT OF COMPAL ELECTRONICS, INC.

Compal Electronics, Inc.

Title: R5C833_1394

Size: Custom | Document Number: LA-4092P | Rev: 0.4

Date: Thursday, February 21, 2008 | Sheet 35 of 53

CODEC POWER

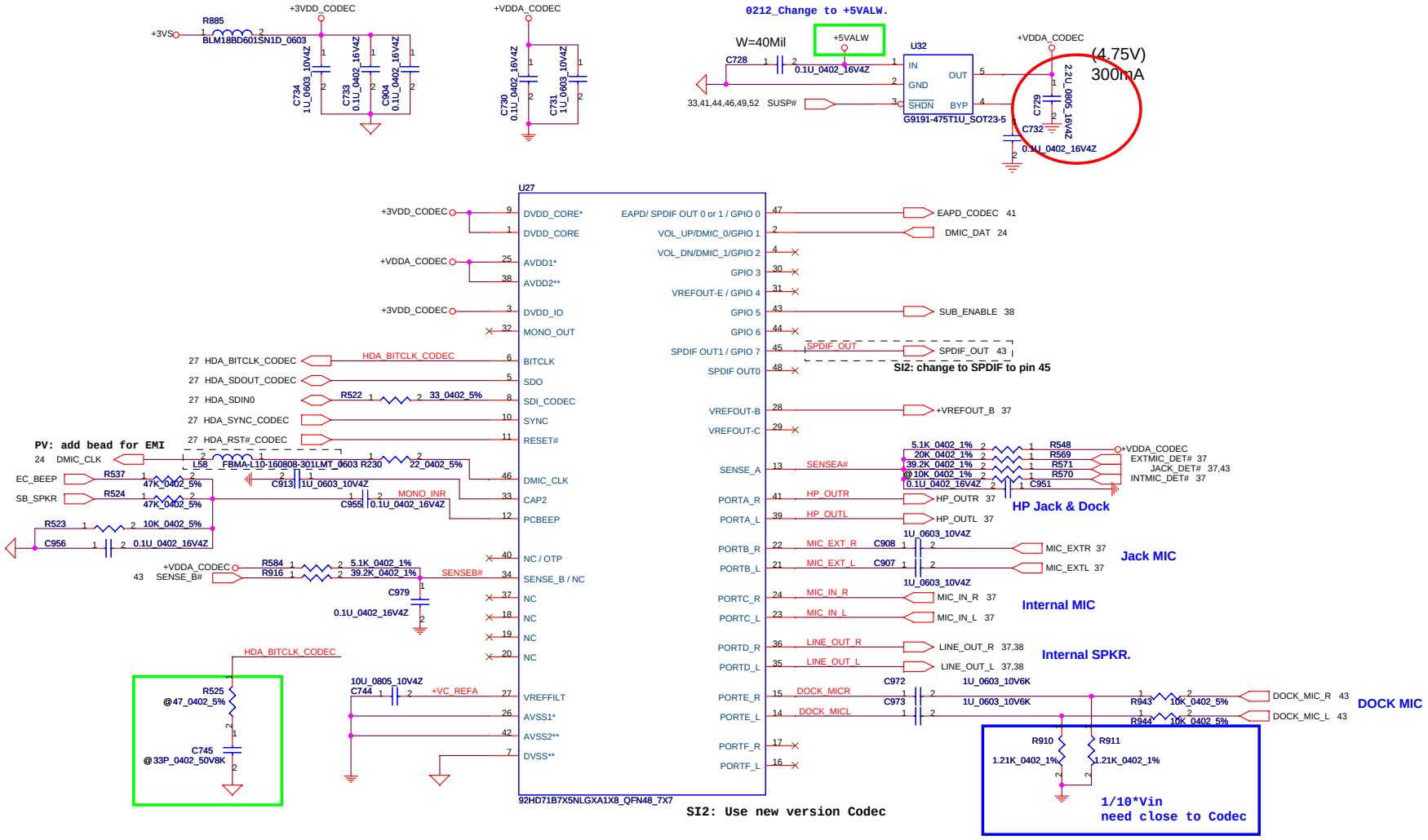

SENSE A		SENSE B	
Port	Resistor	Port	Resistor
A	39.2K	E	39.2K
B	20K	F	20K
C	10K	G	10K
D	5.11K	H	5.11K

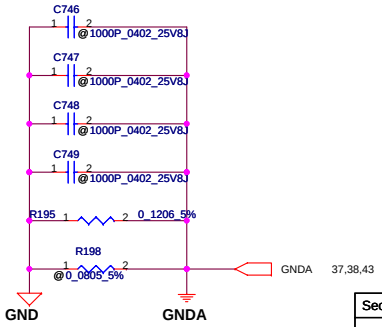

HP_DET#	MIC_DET	LINEOUT	PORT-A <Earphone OUT>	MIC	EQ
0(LOW)	0(LOW)	OFF	ON	ON	Disable
0(LOW)	NC	OFF	ON	OFF	Disable
NC	0(LOW)	ON	OFF	ON	Enable
NC	NC	ON	OFF	OFF	Enable

Security Classification	Compal Secret Data		
Issued Date	2007/08/02	Deciphered Date	2008/08/02

THIS SHEET OF ENGINEERING DRAWING IS THE PROPRIETARY PROPERTY OF COMPAL ELECTRONICS, INC. AND CONTAINS CONFIDENTIAL AND TRADE SECRET INFORMATION. THIS SHEET MAY NOT BE TRANSFERED FROM THE CUSTODY OF THE COMPETENT DIVISION OF R&D DEPARTMENT EXCEPT AS AUTHORIZED BY COMPAL ELECTRONICS, INC. NEITHER THIS SHEET NOR THE INFORMATION IT CONTAINS MAY BE USED BY OR DISCLOSED TO ANY THIRD PARTY WITHOUT PRIOR WRITTEN CONSENT OF COMPAL ELECTRONICS, INC.

Compal Electronics, Inc.

Title: Audio Codec-IDT9271B7

Size: Custom | Document Number: LA-4092P | Rev: 0.4

Date: Thursday, February 21, 2008 | Sheet 36 of 53

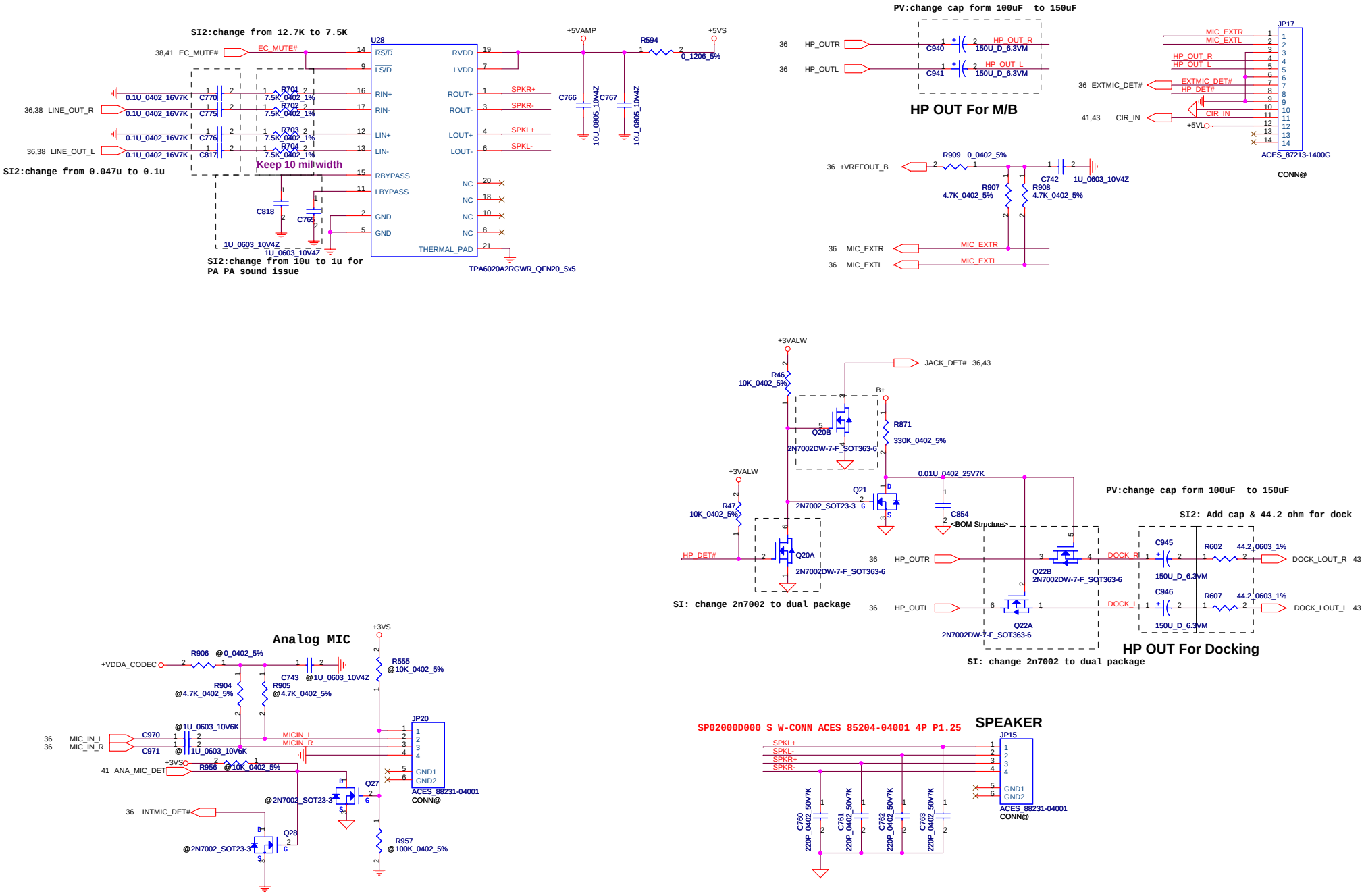

Security Classification	Compal Secret Data		
Issued Date	2007/08/02	Deciphered Date	2008/08/02

THIS SHEET OF ENGINEERING DRAWING IS THE PROPRIETARY PROPERTY OF COMPAL ELECTRONICS, INC. AND CONTAINS CONFIDENTIAL AND TRADE SECRET INFORMATION. THIS SHEET MAY NOT BE TRANSFERED FROM THE CUSTODY OF THE COMPETENT DIVISION OF R&D DEPARTMENT EXCEPT AS AUTHORIZED BY COMPAL ELECTRONICS, INC. NEITHER THIS SHEET NOR THE INFORMATION IT CONTAINS MAY BE USED BY OR DISCLOSED TO ANY THIRD PARTY WITHOUT PRIOR WRITTEN CONSENT OF COMPAL ELECTRONICS, INC.

Compal Electronics, Inc.

Title: **AMP & Audio Jack**

Size	Document Number	Rev
Custom	LA-4092P	0.4

Date: Thursday, February 21, 2008 | Sheet 37 of 53

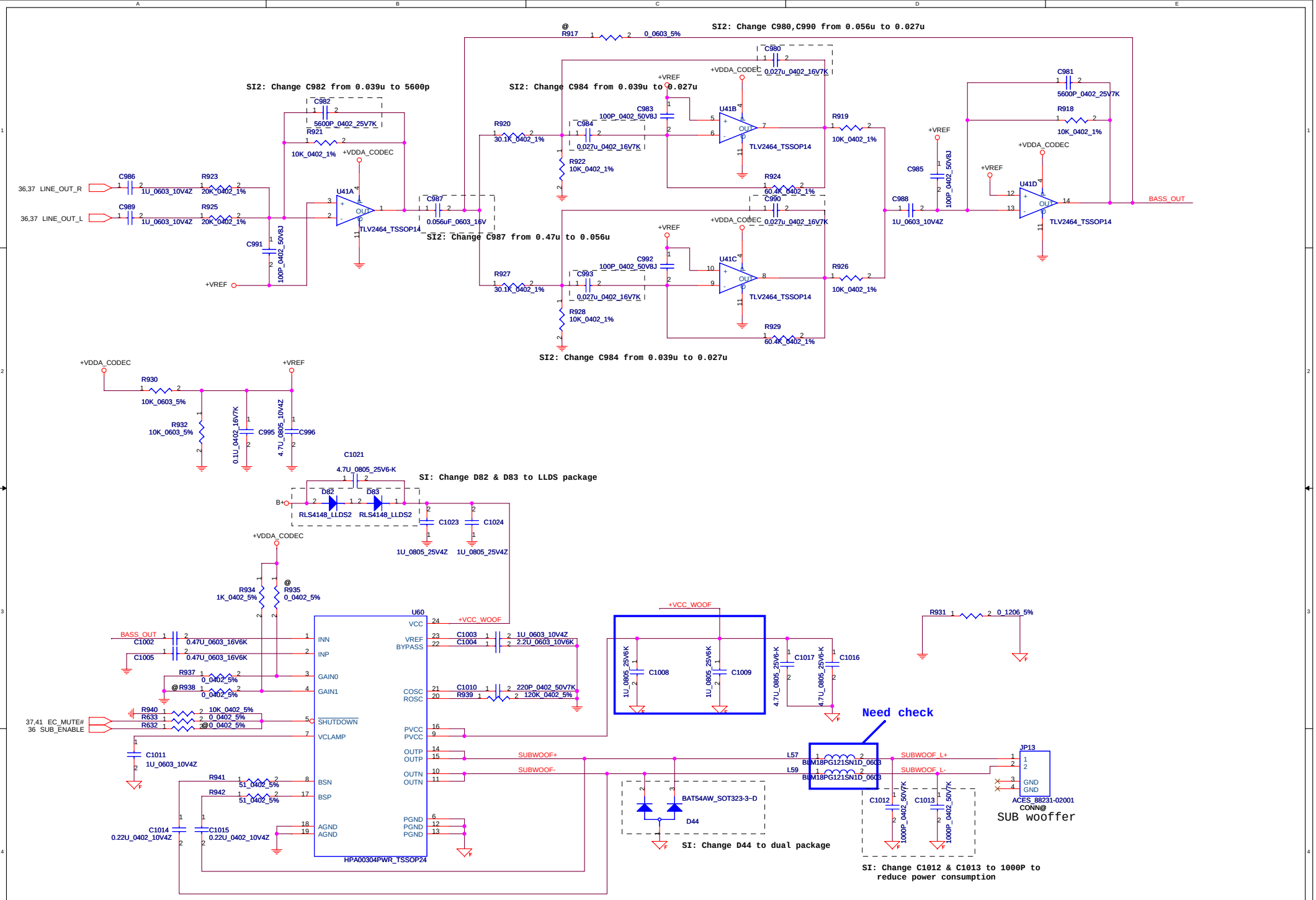

Security Classification	Compal Secret Data		
Issued Date	2006/10/26	Deciphered Date	2006/07/26

THIS SHEET OF ENGINEERING DRAWING IS THE PROPRIETARY PROPERTY OF COMPAL ELECTRONICS, INC. AND CONTAINS CONFIDENTIAL AND TRADE SECRET INFORMATION. THIS SHEET MAY NOT BE TRANSFERED FROM THE CUSTODY OF THE COMPETENT DIVISION OF R&D DEPARTMENT EXCEPT AS AUTHORIZED BY COMPAL ELECTRONICS, INC. NEITHER THIS SHEET NOR THE INFORMATION IT CONTAINS MAY BE USED BY OR DISCLOSED TO ANY THIRD PARTY WITHOUT PRIOR WRITTEN CONSENT OF COMPAL ELECTRONICS, INC.

Title	EQ & Sub Woofer	
Size: Custom	Document Number: LA-4092P	Rev: 0.4
Date: Thursday, February 21, 2008	Sheet 38 of 53	

Left side USB CONNECTOR 0

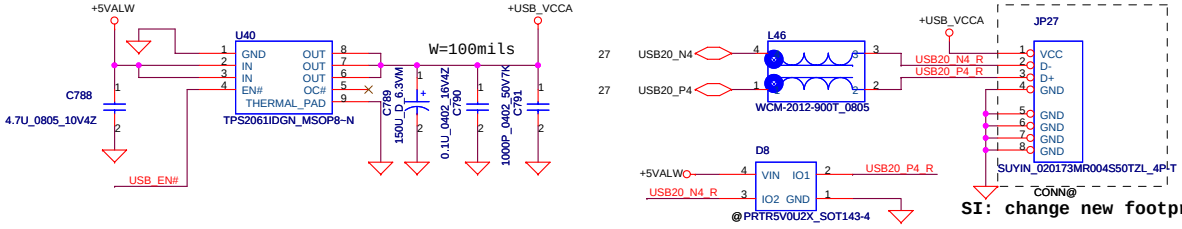

SI: change new footprint

Left side ESATA/USB combination Connector

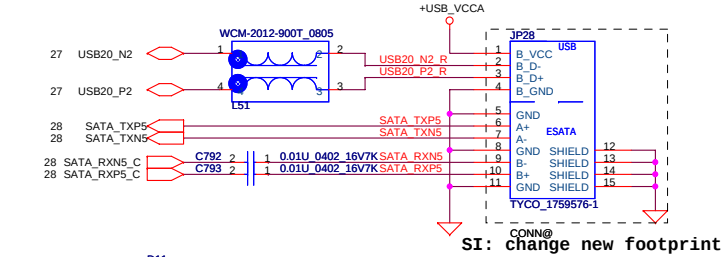

SI: change new footprint

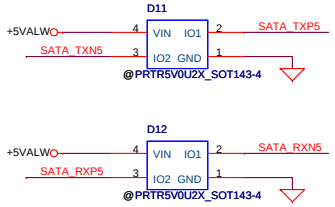

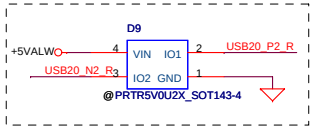

SI: new add for ESD

Touch screen

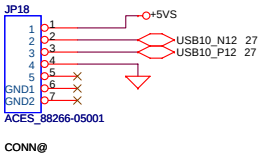

USB Board Conn

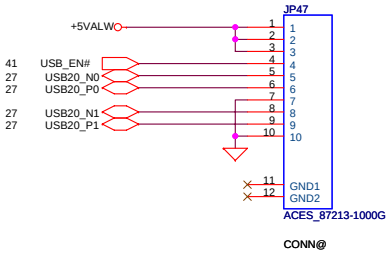

Finger printer

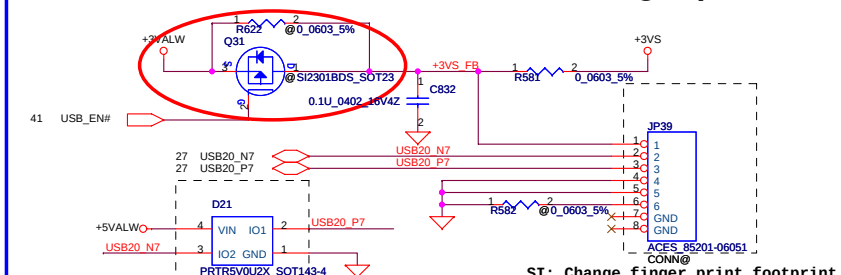

SI: Change finger print footprint

PV: Change PN to SC300000K00 for ESD request

BT Connector

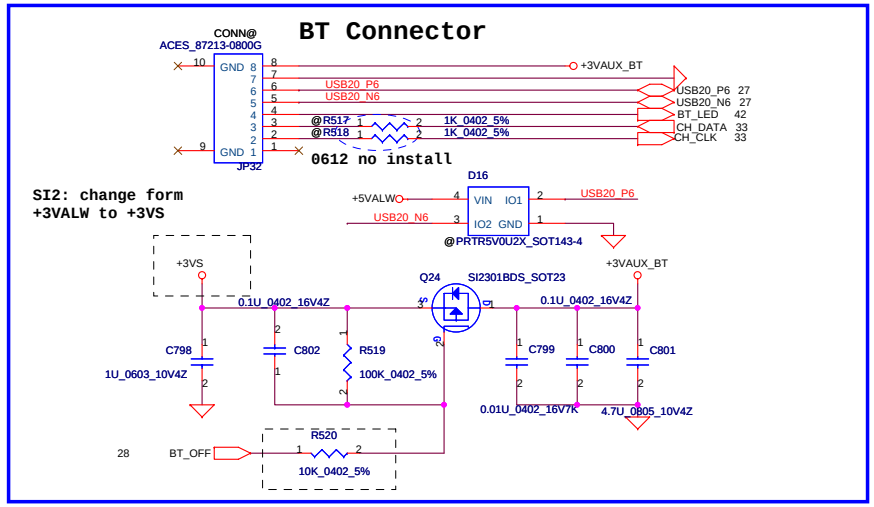

SI: change to 10K ohm to make
sure MOS can turn on

Security Classification	Compal Secret Data		
Issued Date	2007/08/02	Deciphered Date	2008/08/02

THIS SHEET OF ENGINEERING DRAWING IS THE PROPRIETARY PROPERTY OF COMPAL ELECTRONICS, INC. AND CONTAINS CONFIDENTIAL AND TRADE SECRET INFORMATION. THIS SHEET MAY NOT BE TRANSFERED FROM THE CUSTODY OF THE COMPETENT DIVISION OF R&D DEPARTMENT EXCEPT AS AUTHORIZED BY COMPAL ELECTRONICS, INC. NEITHER THIS SHEET NOR THE INFORMATION IT CONTAINS MAY BE USED BY OR DISCLOSED TO ANY THIRD PARTY WITHOUT PRIOR WRITTEN CONSENT OF COMPAL ELECTRONICS, INC.

Compal Electronics, Inc.

Title: **Cover Sheet**

Size	Document Number	Rev
Custom	LA-4092P	0.4

Date: Thursday, February 21, 2008 | Sheet 39 of 53

SI2: Change from +3VL to +3VALW and unmount this EEPROM

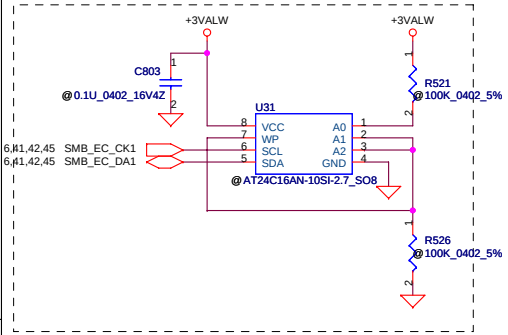

SPI Flash (8Mb*1)

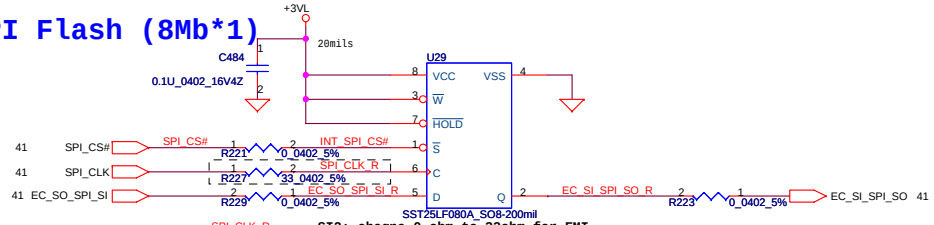

SI2: chagne 0 ohm to 33ohm for EMI

SI2: Add 22p for EMI

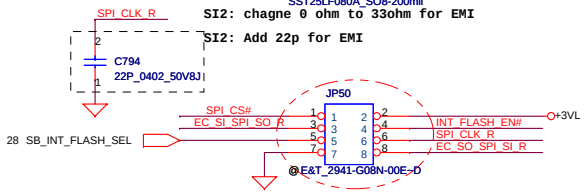

C:Chg. PN to LTC00000200

SI2: Change from +3VALW to +3VL

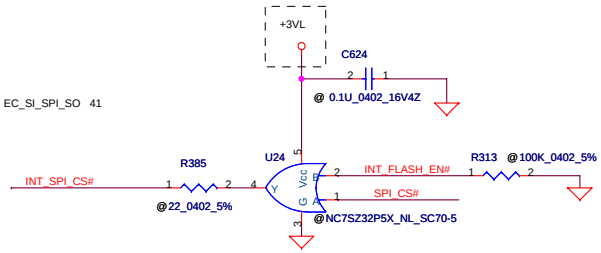

LPC Debug Port

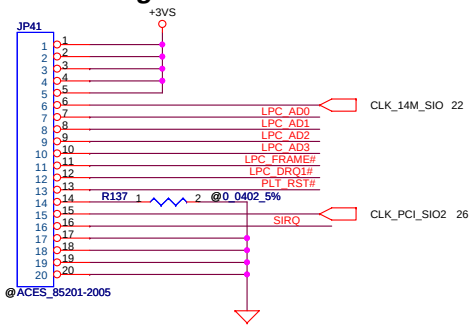

LPC Debug Port

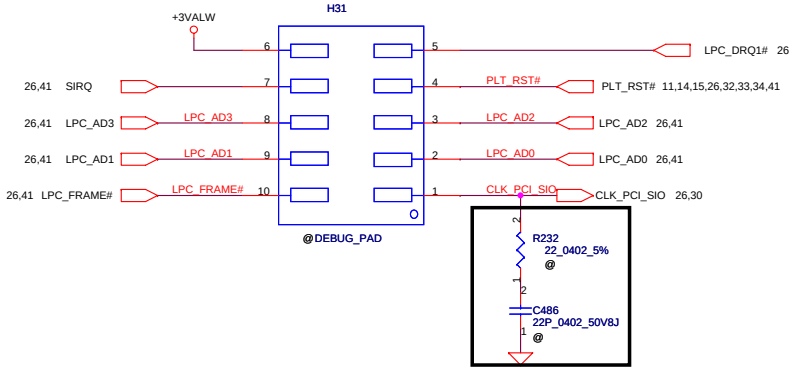

Security Classification	Compal Secret Data		
Issued Date	2007/08/02	Deciphered Date	2008/08/02

THIS SHEET OF ENGINEERING DRAWING IS THE PROPRIETARY PROPERTY OF COMPAL ELECTRONICS, INC. AND CONTAINS CONFIDENTIAL AND TRADE SECRET INFORMATION. THIS SHEET MAY NOT BE TRANSFERED FROM THE CUSTODY OF THE COMPETENT DIVISION OF R&D DEPARTMENT EXCEPT AS AUTHORIZED BY COMPAL ELECTRONICS, INC. NEITHER THIS SHEET NOR THE INFORMATION IT CONTAINS MAY BE USED BY OR DISCLOSED TO ANY THIRD PARTY WITHOUT PRIOR WRITTEN CONSENT OF COMPAL ELECTRONICS, INC.

Compal Electronics, Inc.

Title: **TCG/BIOS ROM/PS2/LED/SW**

Size: Custom | Document Number: LA-4092P | Rev: 0.4

Date: Thursday, February 21, 2008 | Sheet 40 of 53

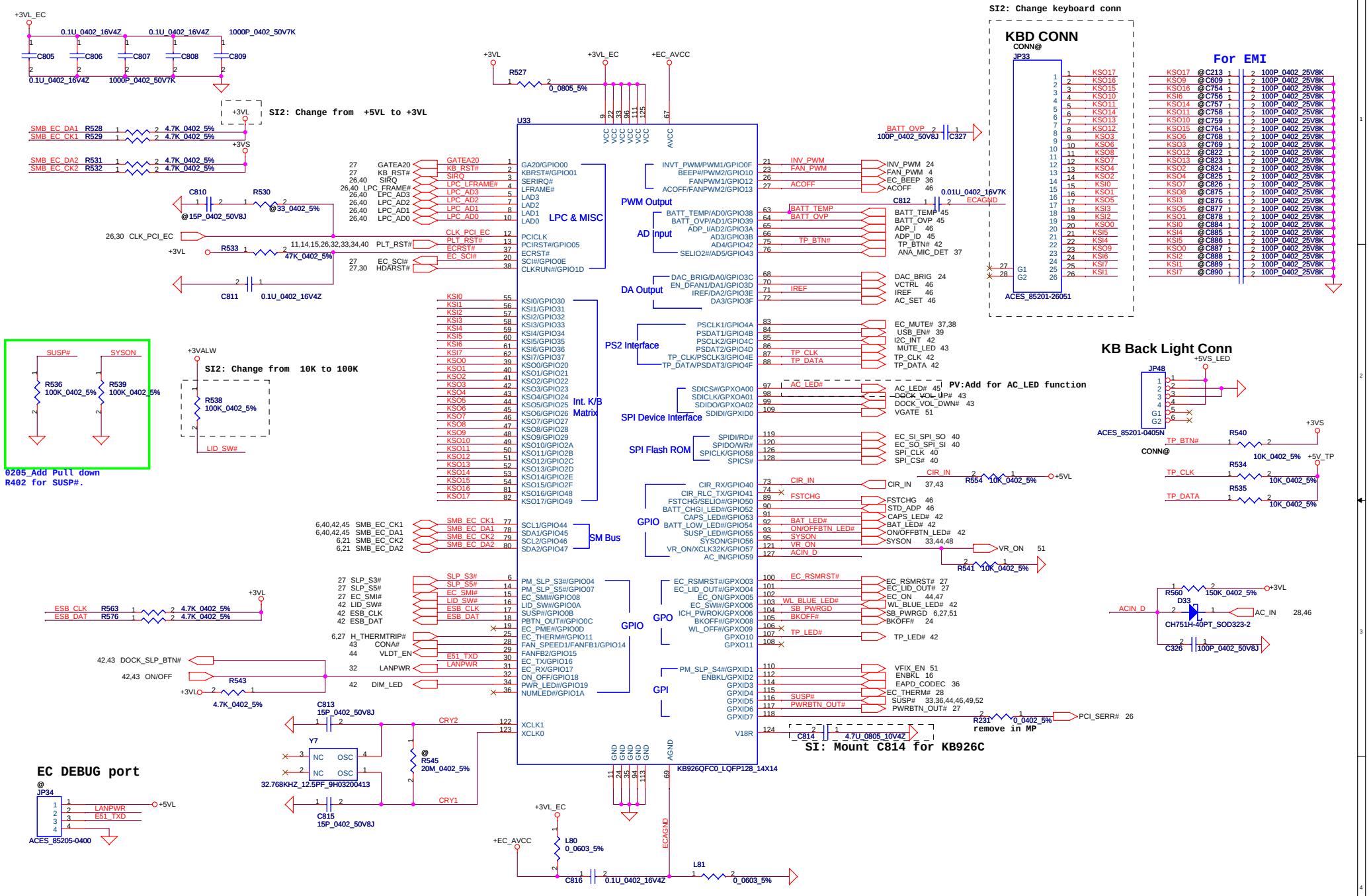

Security Classification	Compal Secret Data		
Issued Date	2007/08/02	Deciphered Date	2008/08/02

THIS SHEET OF ENGINEERING DRAWING IS THE PROPRIETARY PROPERTY OF COMPAL ELECTRONICS, INC. AND CONTAINS CONFIDENTIAL AND TRADE SECRET INFORMATION. THIS SHEET MAY NOT BE TRANSFERED FROM THE CUSTODY OF THE COMPETENT DIVISION OF R&D DEPARTMENT EXCEPT AS AUTHORIZED BY COMPAL ELECTRONICS, INC. NEITHER THIS SHEET NOR THE INFORMATION IT CONTAINS MAY BE USED BY OR DISCLOSED TO ANY THIRD PARTY WITHOUT PRIOR WRITTEN CONSENT OF COMPAL ELECTRONICS, INC.

Compal Electronics, Inc.

Title: **EC KB926/KB conn**

Size	Document Number	Rev
Custom	LA-4092P	0.4

Date: Thursday, February 21, 2008 | Sheet 41 of 53

MDC 1.5 Conn.

Change type 4/25

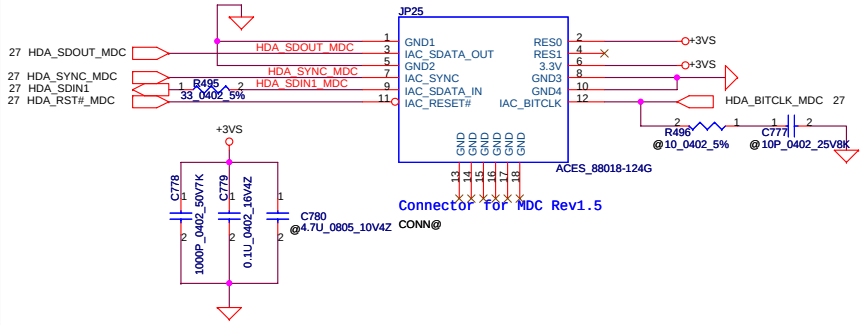

CAPS LOCK LED

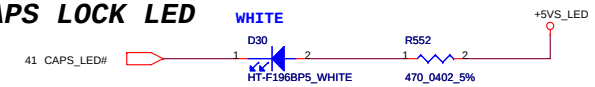

POWER LED(Left 1)

Battery Charge LED(Left 2)

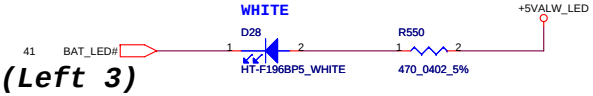

HDD LED(Left 3)

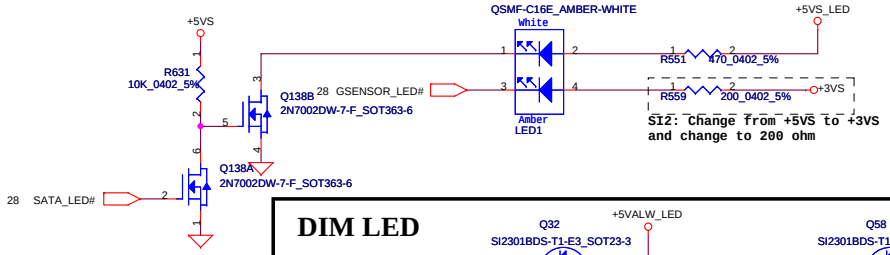

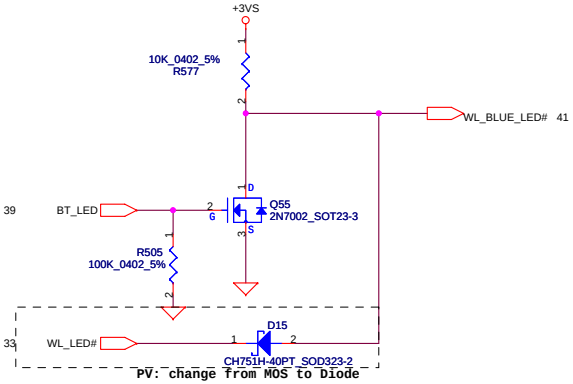

PV: Add LDO for ENE cap board

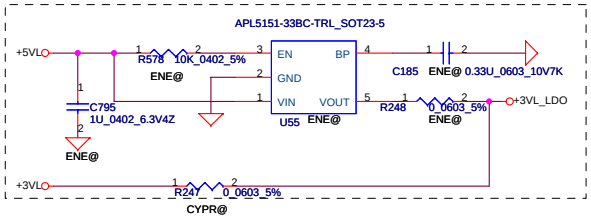

DIM LED

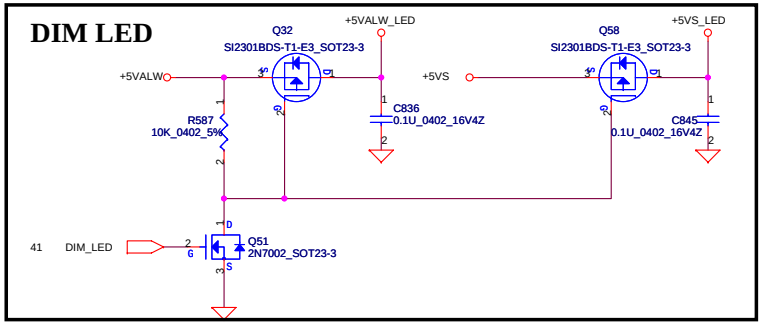

SI: Change to +3VL to support Qplay bottom boot in BATT mode

T/P Board (Inculde T/P_ON/OFF)

PV: Change PN to SCA00000G00 for ESD request

PV: change from Q85 to R235

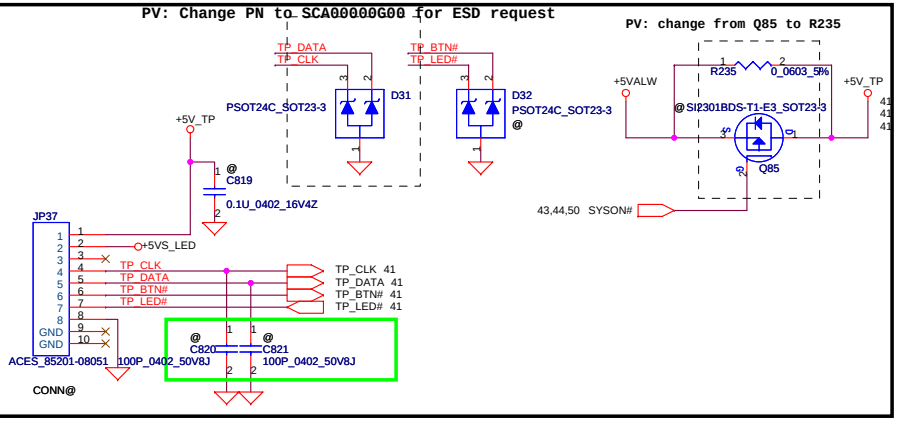

SWITCH BOARD.

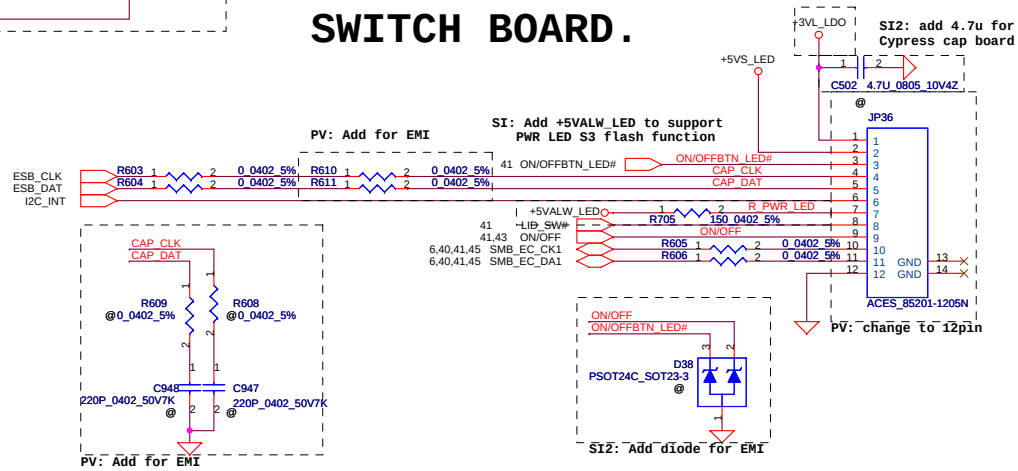

Security Classification	Compal Secret Data		
Issued Date	2007/08/02	Deciphered Date	2008/08/02

THIS SHEET OF ENGINEERING DRAWING IS THE PROPRIETARY PROPERTY OF COMPAL ELECTRONICS, INC. AND CONTAINS CONFIDENTIAL AND TRADE SECRET INFORMATION. THIS SHEET MAY NOT BE TRANSFERED FROM THE CUSTODY OF THE COMPETENT DIVISION OF R&D DEPARTMENT EXCEPT AS AUTHORIZED BY COMPAL ELECTRONICS, INC. NEITHER THIS SHEET NOR THE INFORMATION IT CONTAINS MAY BE USED BY OR DISCLOSED TO ANY THIRD PARTY WITHOUT PRIOR WRITTEN CONSENT OF COMPAL ELECTRONICS, INC.

Compal Electronics, Inc.

Title: MDC/KBD/ON_OFF/LID

Size: Custom | Document Number: LA-4092P | Rev: 0.4

Date: Thursday, February 21, 2008 | Sheet 42 of 53

Atlas/ Saturn Dock

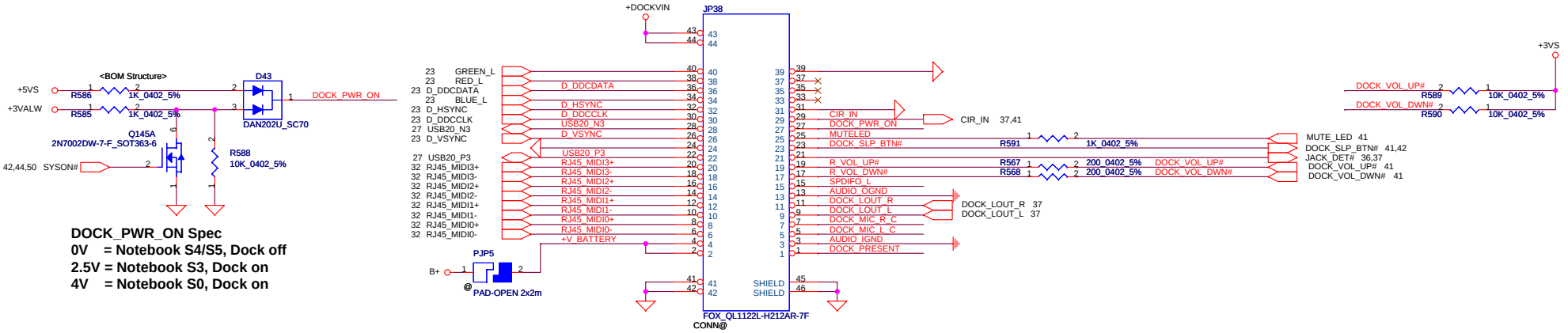

DOCK_PWR_ON Spec
0V = Notebook S4/S5, Dock off
2.5V = Notebook S3, Dock on
4V = Notebook S0, Dock on

need change to reverse type connector

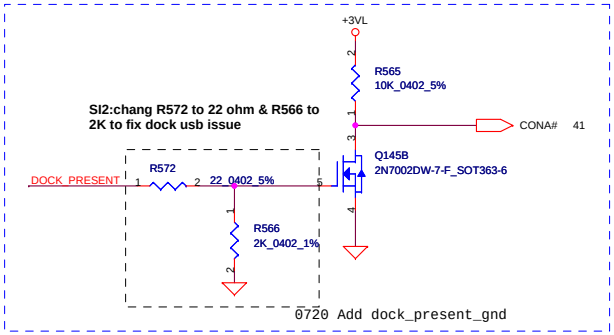

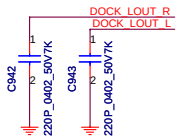

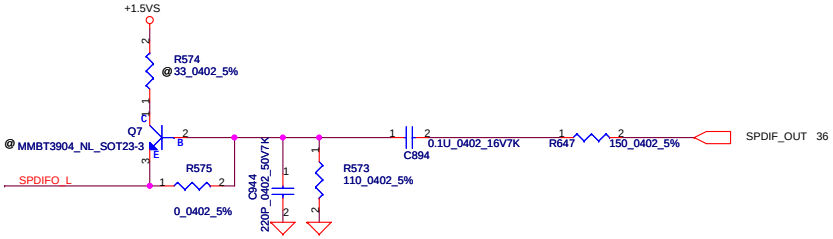

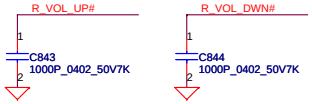

MIC_Dock

Need 600 Ohm 500 mA

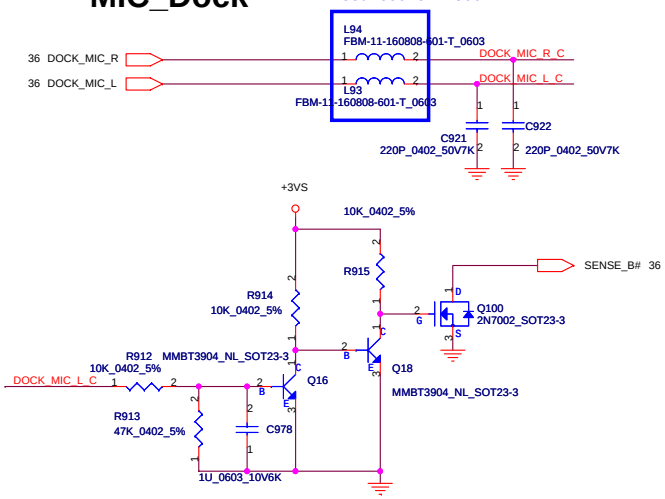

Security Classification	Compal Secret Data		
Issued Date	2007/08/02	Deciphered Date	2008/08/02

THIS SHEET OF ENGINEERING DRAWING IS THE PROPRIETARY PROPERTY OF COMPAL ELECTRONICS, INC. AND CONTAINS CONFIDENTIAL AND TRADE SECRET INFORMATION. THIS SHEET MAY NOT BE TRANSFERED FROM THE CUSTODY OF THE COMPETENT DIVISION OF R&D DEPARTMENT EXCEPT AS AUTHORIZED BY COMPAL ELECTRONICS, INC. NEITHER THIS SHEET NOR THE INFORMATION IT CONTAINS MAY BE USED BY OR DISCLOSED TO ANY THIRD PARTY WITHOUT PRIOR WRITTEN CONSENT OF COMPAL ELECTRONICS, INC.

Compal Electronics, Inc.

Title: **DOCK CONN**

Size: Custom | Document Number: LA-4092P | Rev: 0.4

Date: Thursday, February 21, 2008 | Sheet 43 of 53

+5VALW TO +5VS

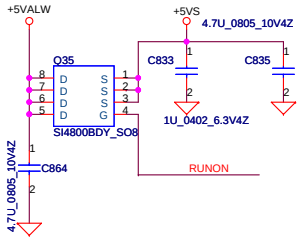

+3VALW TO +3VS

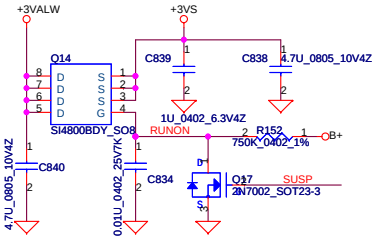

+1.8V TO +1.8VS

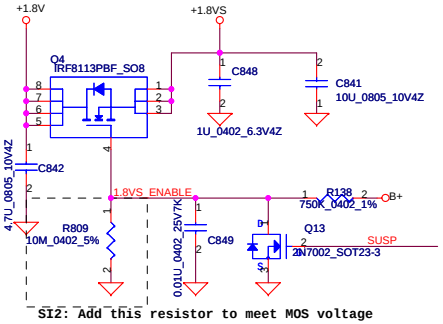

+1.2VALW TO +1.2V_HT

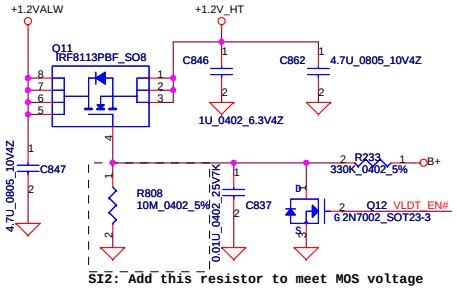

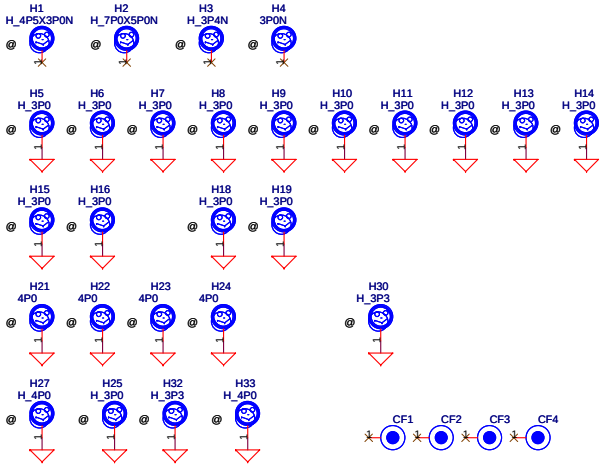

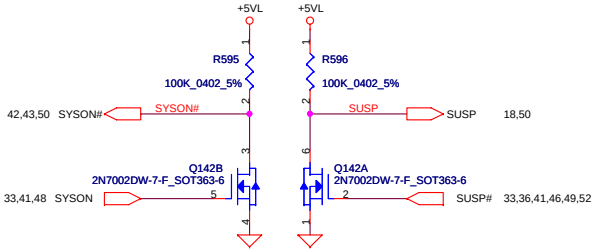

Discharge circuit

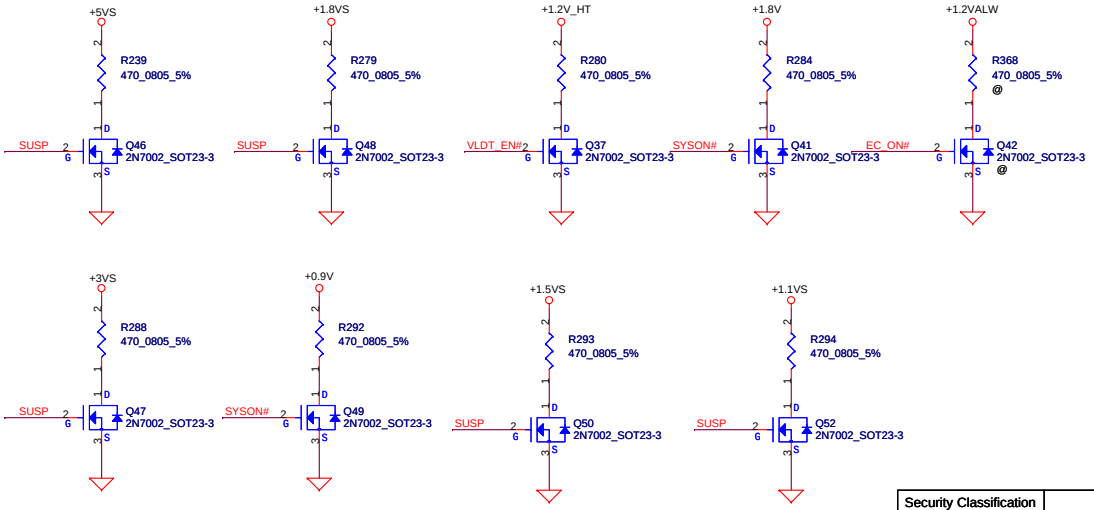

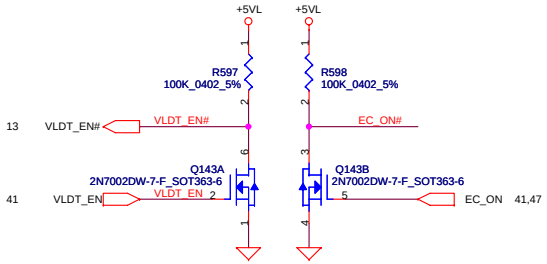

Security Classification	Compal Secret Data		
Issued Date	2007/08/02	Deciphered Date	2008/08/02

THIS SHEET OF ENGINEERING DRAWING IS THE PROPRIETARY PROPERTY OF COMPAL ELECTRONICS, INC. AND CONTAINS CONFIDENTIAL AND TRADE SECRET INFORMATION. THIS SHEET MAY NOT BE TRANSFERED FROM THE CUSTODY OF THE COMPETENT DIVISION OF R&D DEPARTMENT EXCEPT AS AUTHORIZED BY COMPAL ELECTRONICS, INC. NEITHER THIS SHEET NOR THE INFORMATION IT CONTAINS MAY BE USED BY OR DISCLOSED TO ANY THIRD PARTY WITHOUT PRIOR WRITTEN CONSENT OF COMPAL ELECTRONICS, INC.

Compal Electronics, Inc.

Title: **DC/DC Circuits**

Size: Custom | Document Number: LA-4092P | Rev: 0.4

Date: Thursday, February 21, 2008 | Sheet 44 of 53

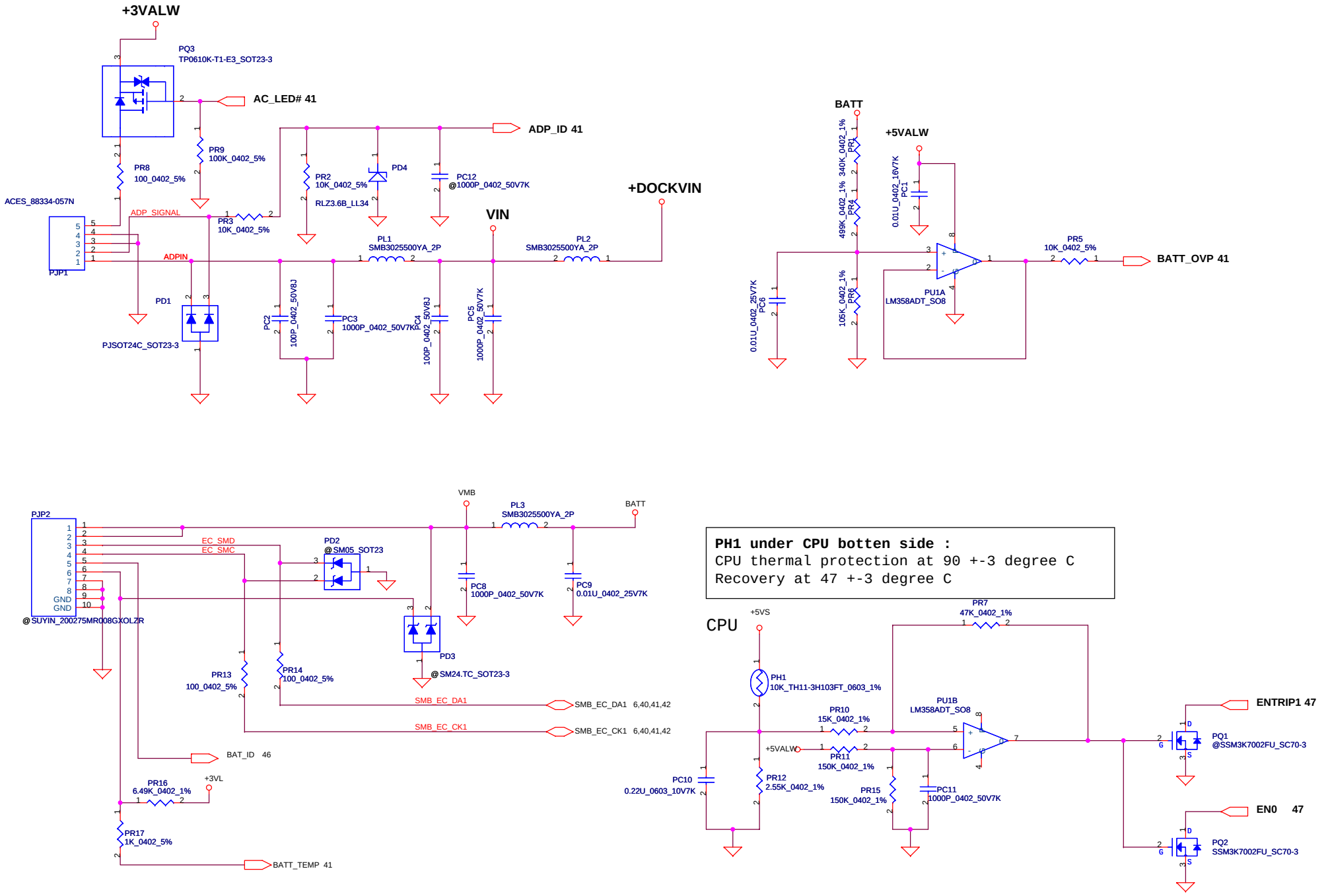

Security Classification	Compal Secret Data		
Issued Date	2007/05/29	Deciphered Date	2008/05/29

THIS SHEET OF ENGINEERING DRAWING IS THE PROPRIETARY PROPERTY OF COMPAL ELECTRONICS, INC. AND CONTAINS CONFIDENTIAL AND TRADE SECRET INFORMATION. THIS SHEET MAY NOT BE TRANSFERED FROM THE CUSTODY OF THE COMPETENT DIVISION OF R&D DEPARTMENT EXCEPT AS AUTHORIZED BY COMPAL ELECTRONICS, INC. NEITHER THIS SHEET NOR THE INFORMATION IT CONTAINS MAY BE USED BY OR DISCLOSED TO ANY THIRD PARTY WITHOUT PRIOR WRITTEN CONSENT OF COMPAL ELECTRONICS, INC.

Compal Electronics, Inc.

Title: **DC Connector/CPU_OTP**

Size | Document Number: *LA-4092P* | Rev: 0.1

Date: Thursday, February 21, 2008 | Sheet 45 of 53

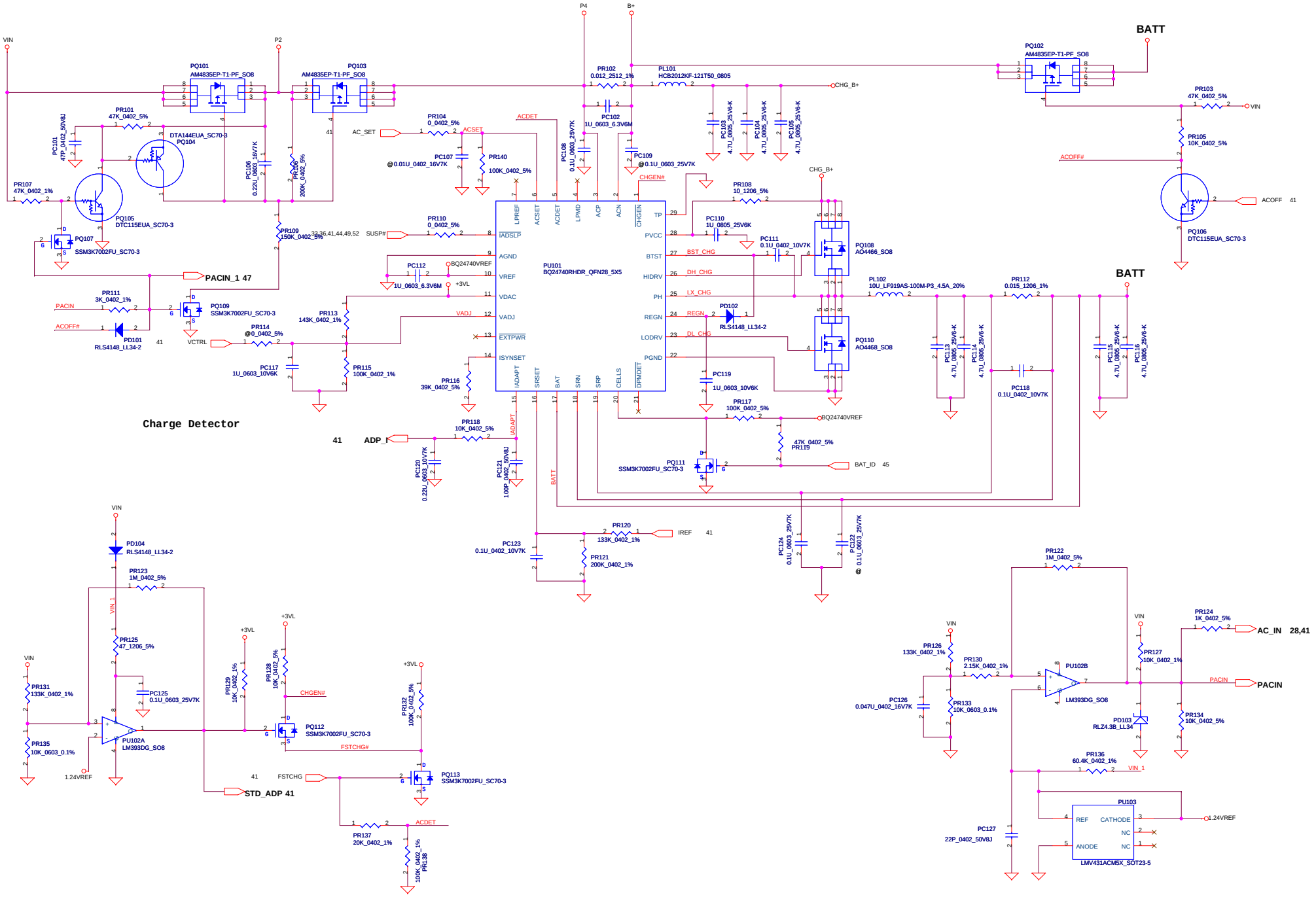

Security Classification	Compal Secret Data		
Issued Date	2007/05/29	Deciphered Date	2008/05/29

THIS SHEET OF ENGINEERING DRAWING IS THE PROPRIETARY PROPERTY OF COMPAL ELECTRONICS, INC. AND CONTAINS CONFIDENTIAL AND TRADE SECRET INFORMATION. THIS SHEET MAY NOT BE TRANSFERED FROM THE CUSTODY OF THE COMPETENT DIVISION OF R&D DEPARTMENT EXCEPT AS AUTHORIZED BY COMPAL ELECTRONICS, INC. NEITHER THIS SHEET NOR THE INFORMATION IT CONTAINS MAY BE USED BY OR DISCLOSED TO ANY THIRD PARTY WITHOUT PRIOR WRITTEN CONSENT OF COMPAL ELECTRONICS, INC.

Compal Electronics, Inc.

Title: **Charger**

Size	Document Number	Rev
	LA-4092P	0.1

Date: Thursday, February 21, 2008 | Sheet 46 of 53

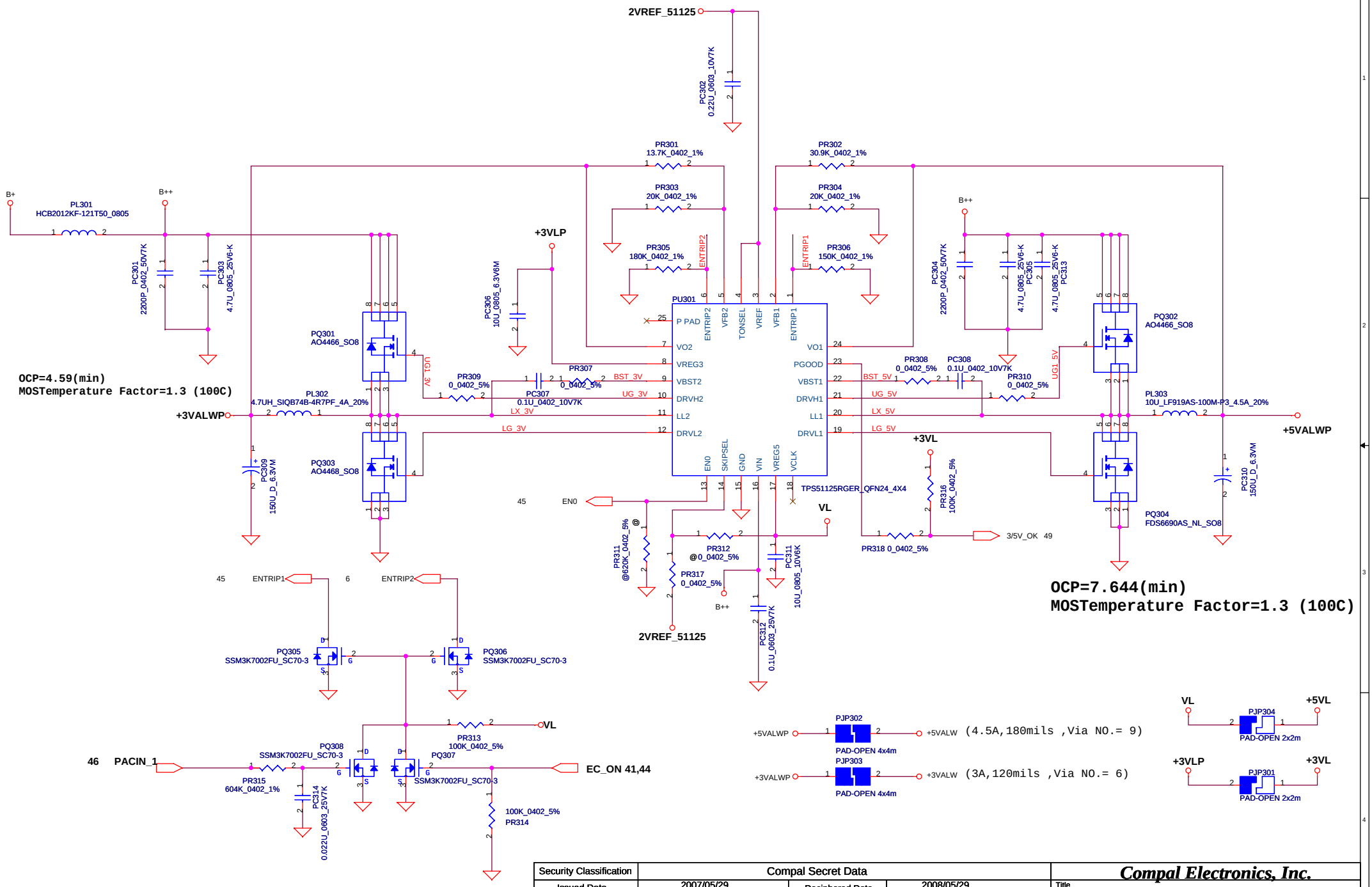

Security Classification	Compal Secret Data		
Issued Date	2007/05/29	Deciphered Date	2008/05/29

THIS SHEET OF ENGINEERING DRAWING IS THE PROPRIETARY PROPERTY OF COMPAL ELECTRONICS, INC. AND CONTAINS CONFIDENTIAL AND TRADE SECRET INFORMATION. THIS SHEET MAY NOT BE TRANSFERED FROM THE CUSTODY OF THE COMPETENT DIVISION OF R&D DEPARTMENT EXCEPT AS AUTHORIZED BY COMPAL ELECTRONICS, INC. NEITHER THIS SHEET NOR THE INFORMATION IT CONTAINS MAY BE USED BY OR DISCLOSED TO ANY THIRD PARTY WITHOUT PRIOR WRITTEN CONSENT OF COMPAL ELECTRONICS, INC.

Compal Electronics, Inc.

Title: **3.3VALWP/5VALWP**

Size: | Document Number: *LA-4092P* | Rev: 0.1

Date: Thursday, February 21, 2008 | Sheet 47 of 53

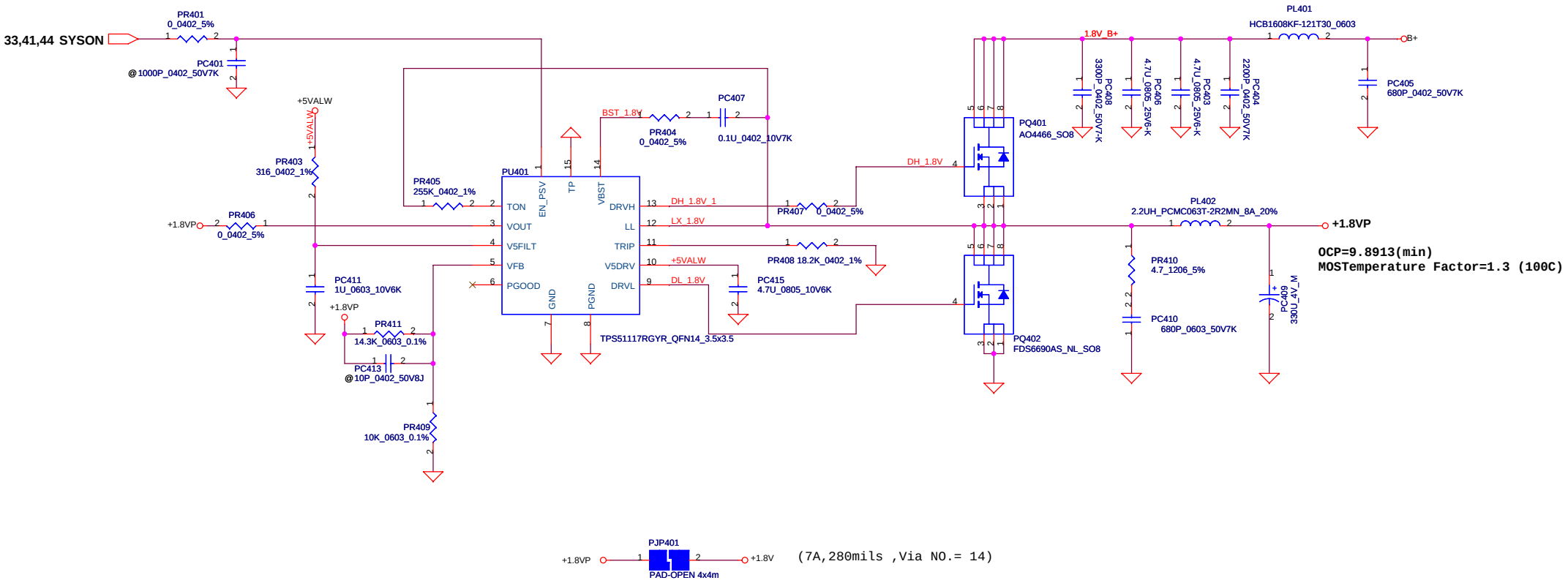

Security Classification	Compal Secret Data		
Issued Date	2007/05/29	Deciphered Date	2008/05/29

THIS SHEET OF ENGINEERING DRAWING IS THE PROPRIETARY PROPERTY OF COMPAL ELECTRONICS, INC. AND CONTAINS CONFIDENTIAL AND TRADE SECRET INFORMATION. THIS SHEET MAY NOT BE TRANSFERED FROM THE CUSTODY OF THE COMPETENT DIVISION OF R&D DEPARTMENT EXCEPT AS AUTHORIZED BY COMPAL ELECTRONICS, INC. NEITHER THIS SHEET NOR THE INFORMATION IT CONTAINS MAY BE USED BY OR DISCLOSED TO ANY THIRD PARTY WITHOUT PRIOR WRITTEN CONSENT OF COMPAL ELECTRONICS, INC.

Compal Electronics, Inc.

Title: **1.8VP**

Size | Document Number: *LA-4021P* | Rev: 0.1

Date: Thursday, February 21, 2008 | Sheet 48 of 53

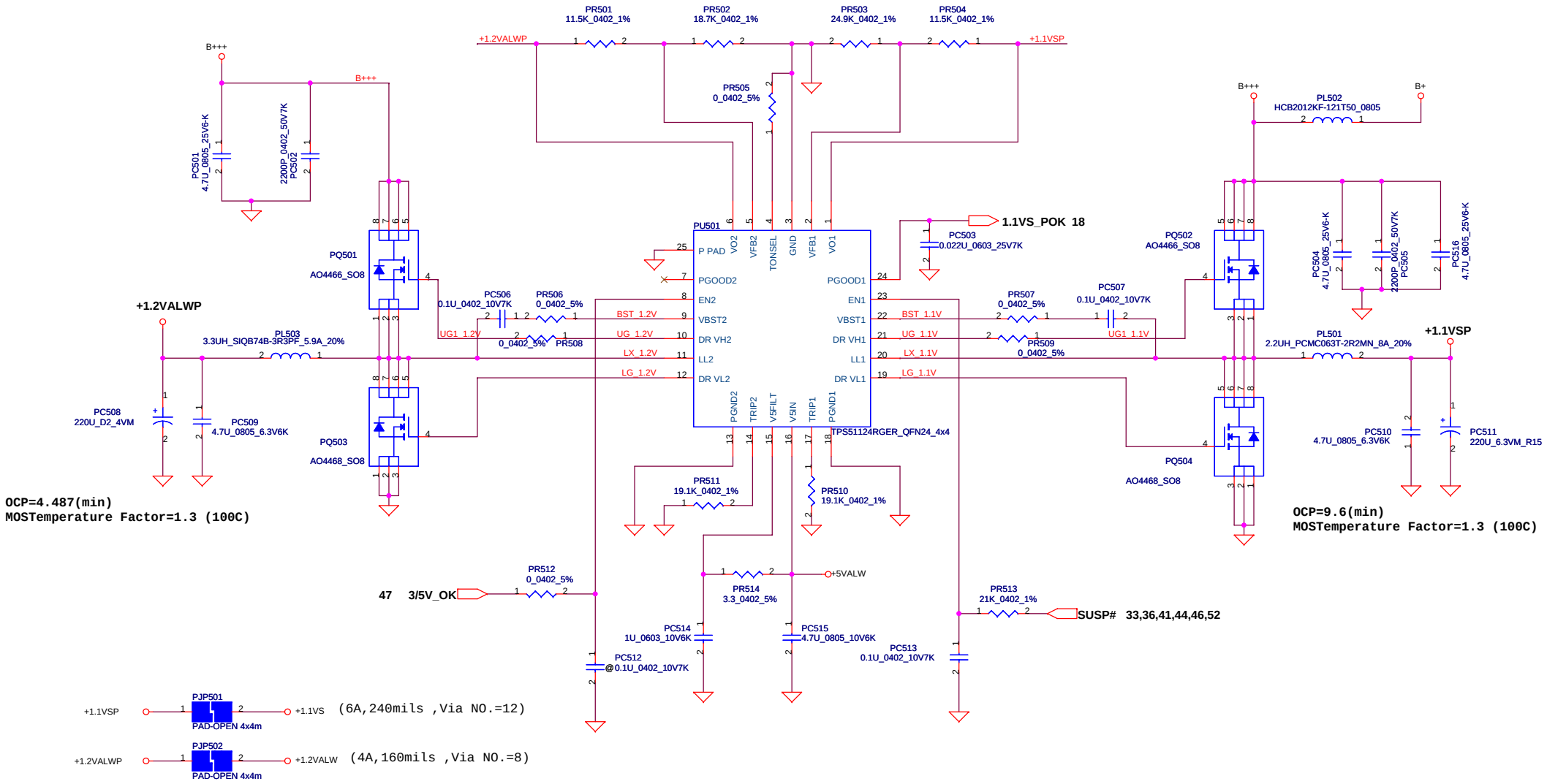

Security Classification	Compal Secret Data		
Issued Date	2007/05/29	Deciphered Date	2008/05/29

THIS SHEET OF ENGINEERING DRAWING IS THE PROPRIETARY PROPERTY OF COMPAL ELECTRONICS, INC. AND CONTAINS CONFIDENTIAL AND TRADE SECRET INFORMATION. THIS SHEET MAY NOT BE TRANSFERED FROM THE CUSTODY OF THE COMPETENT DIVISION OF R&D DEPARTMENT EXCEPT AS AUTHORIZED BY COMPAL ELECTRONICS, INC. NEITHER THIS SHEET NOR THE INFORMATION IT CONTAINS MAY BE USED BY OR DISCLOSED TO ANY THIRD PARTY WITHOUT PRIOR WRITTEN CONSENT OF COMPAL ELECTRONICS, INC.

Compal Electronics, Inc.

Title: **1.1VSP/1.2VALWP**

Size | Document Number: *LA-4092P* | Rev: 0.1

Date: Thursday, February 21, 2008 | Sheet 49 of 53

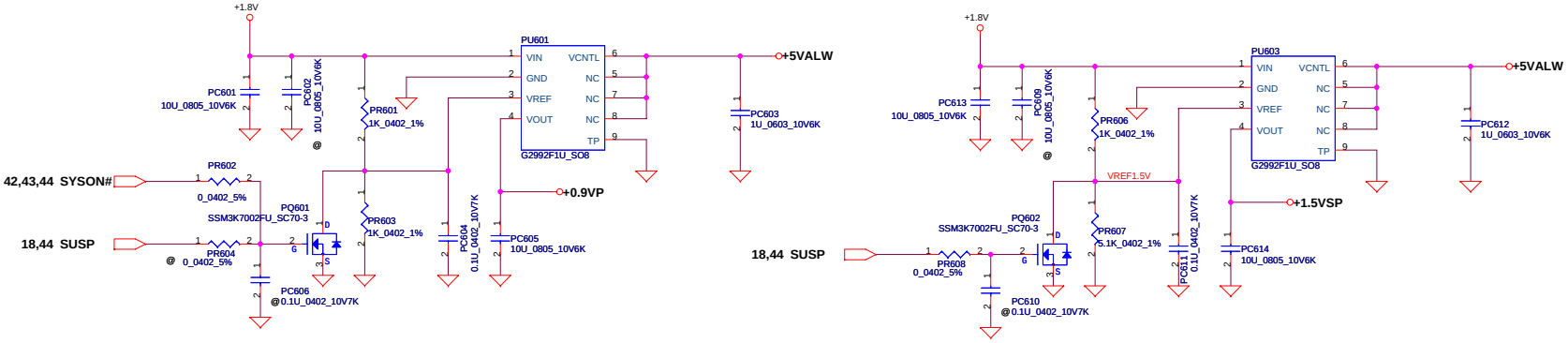

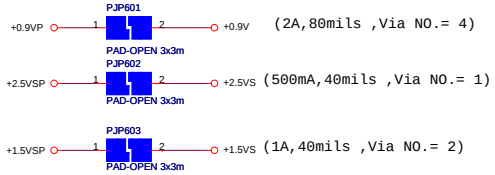

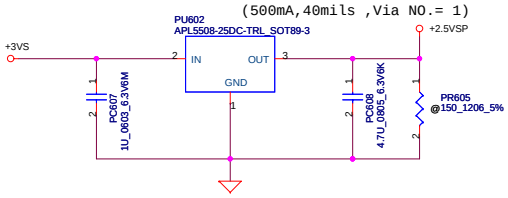

Security Classification	Compal Secret Data		
Issued Date	2006/11/23	Deciphered Date	2007/11/23

THIS SHEET OF ENGINEERING DRAWING IS THE PROPRIETARY PROPERTY OF COMPAL ELECTRONICS, INC. AND CONTAINS CONFIDENTIAL AND TRADE SECRET INFORMATION. THIS SHEET MAY NOT BE TRANSFERED FROM THE CUSTODY OF THE COMPETENT DIVISION OF R&D DEPARTMENT EXCEPT AS AUTHORIZED BY COMPAL ELECTRONICS, INC. NEITHER THIS SHEET NOR THE INFORMATION IT CONTAINS MAY BE USED BY OR DISCLOSED TO ANY THIRD PARTY WITHOUT PRIOR WRITTEN CONSENT OF COMPAL ELECTRONICS, INC.

Compal Electronics, Inc.

Title: **0.9VSP/2.5VSP/1.5VSP**

Size | Document Number: *LA-4092P* | Rev: 0.2

Date: Thursday, February 21, 2008 | Sheet 50 of 53

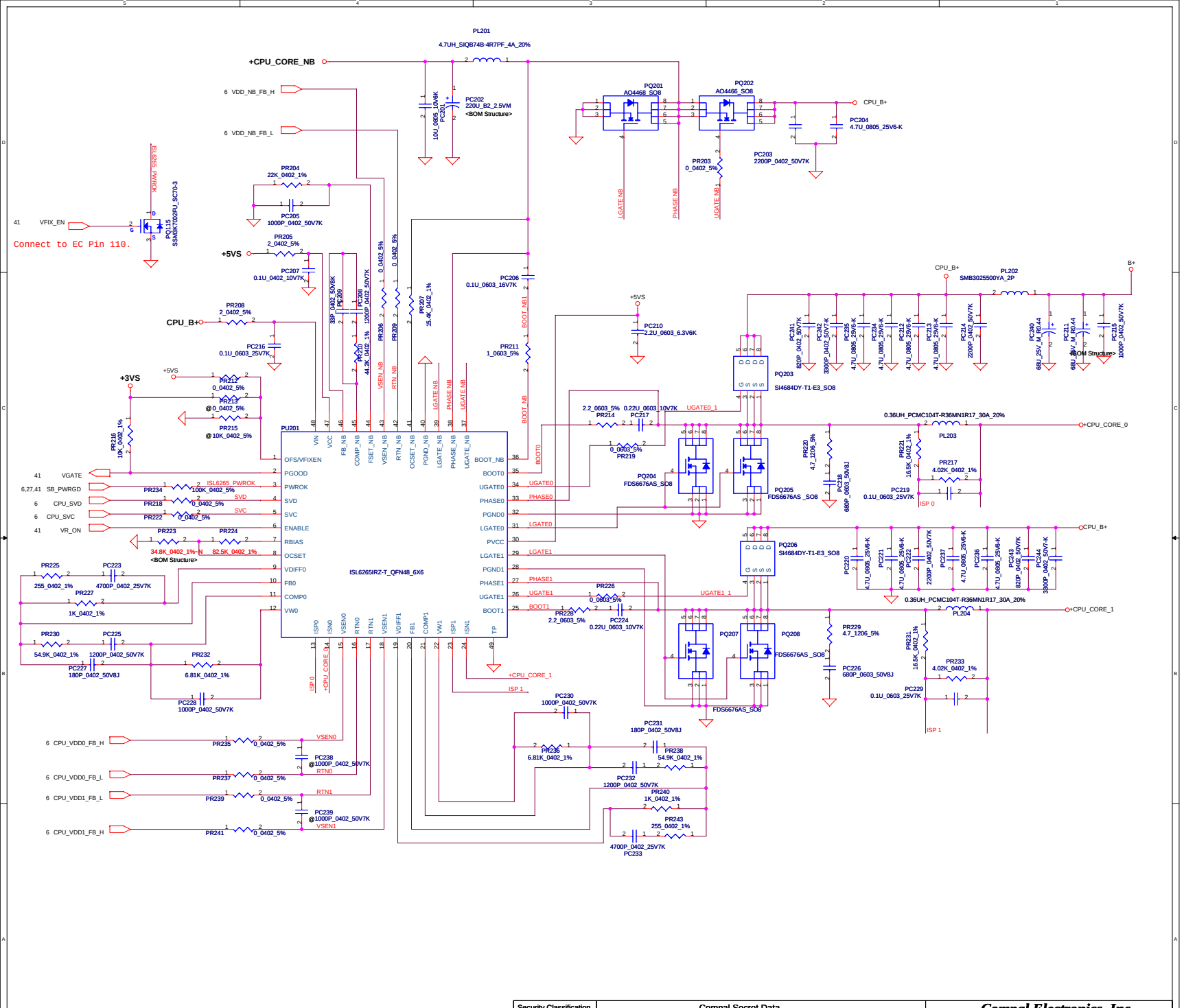

Security Classification	Compal Secret Data		
Issued Date	2006/11/23	Deciphered Date	2007/11/23

THIS SHEET OF ENGINEERING DRAWING IS THE PROPRIETARY PROPERTY OF COMPAL ELECTRONICS, INC. AND CONTAINS CONFIDENTIAL AND TRADE SECRET INFORMATION. THIS SHEET MAY NOT BE TRANSFERED FROM THE CUSTODY OF THE COMPETENT DIVISION OF R&D DEPARTMENT EXCEPT AS AUTHORIZED BY COMPAL ELECTRONICS, INC. NEITHER THIS SHEET NOR THE INFORMATION IT CONTAINS MAY BE USED BY OR DISCLOSED TO ANY THIRD PARTY WITHOUT PRIOR WRITTEN CONSENT OF COMPAL ELECTRONICS, INC.

Compal Electronics, Inc.

Title: **+CPU_CORE**

Size: | Document Number: **LA-4092P** | Rev: 0.2

Date: Thursday, February 21, 2008 | Sheet 51 of 53

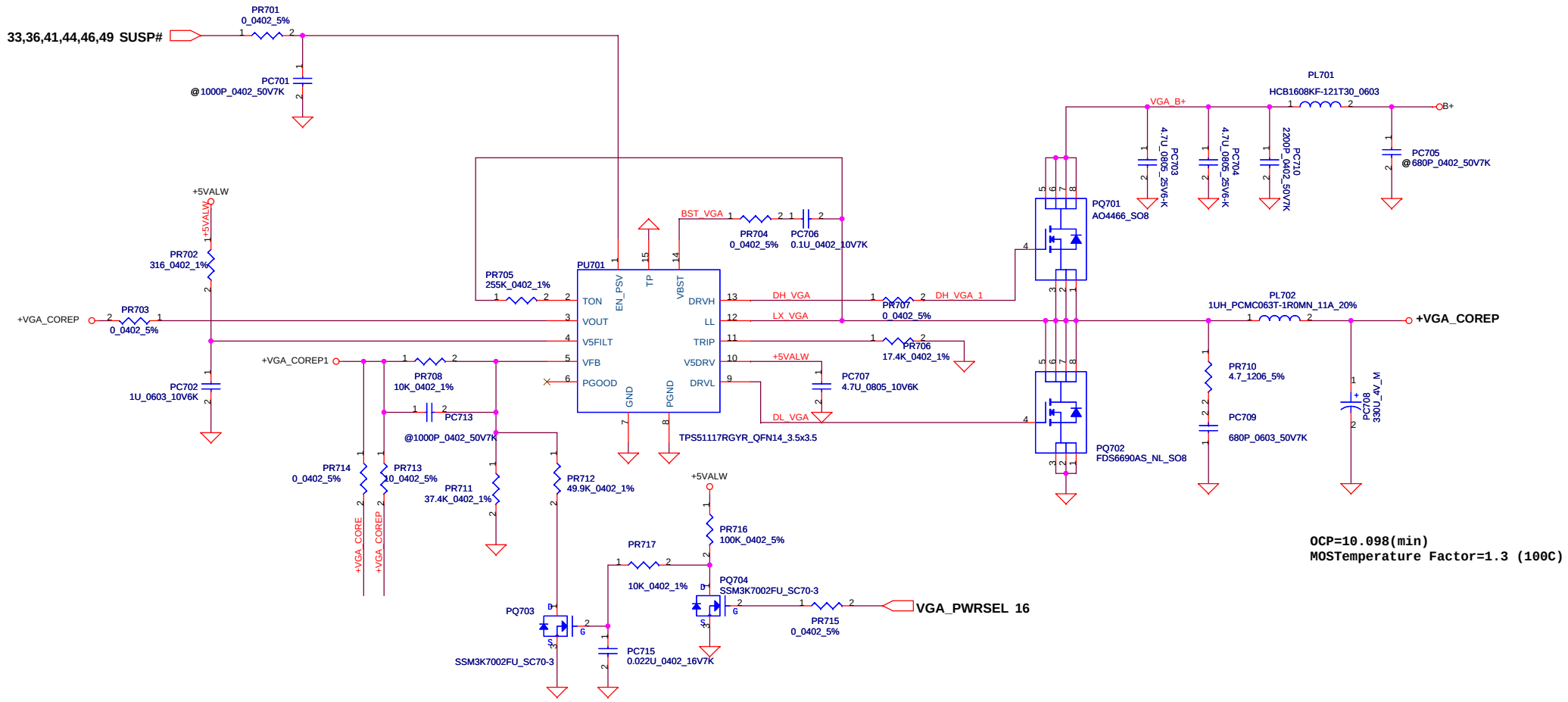

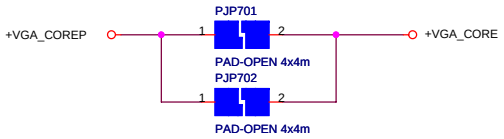

(7A,280mils ,Via NO.= 14)

High: VGA_CORE 0.9V
Low: VGA_CORE 1.1V

Security Classification	Compal Secret Data		
Issued Date	2007/05/29	Deciphered Date	2008/05/29

THIS SHEET OF ENGINEERING DRAWING IS THE PROPRIETARY PROPERTY OF COMPAL ELECTRONICS, INC. AND CONTAINS CONFIDENTIAL AND TRADE SECRET INFORMATION. THIS SHEET MAY NOT BE TRANSFERED FROM THE CUSTODY OF THE COMPETENT DIVISION OF R&D DEPARTMENT EXCEPT AS AUTHORIZED BY COMPAL ELECTRONICS, INC. NEITHER THIS SHEET NOR THE INFORMATION IT CONTAINS MAY BE USED BY OR DISCLOSED TO ANY THIRD PARTY WITHOUT PRIOR WRITTEN CONSENT OF COMPAL ELECTRONICS, INC.

Compal Electronics, Inc.

Title: **VGA_CORE**

Size | Document Number: *LA-4092P* | Rev: 0.1

Date: Thursday, February 21, 2008 | Sheet 52 of 53

Version Change List (P. I. R. List) for Power Circuit

Item	Page#	Title	Date	Request Owner	Issue Description	Solution Description	Rev.
1	48	1.8VP	10/23	Compal	for power requset	PU401 change the IC from "S IC RT8204PQW WQFN 16P" to "S IC TPS51117RGYR QFN 14P".	
2	46	Charger	10/30	Compal	for power requset	PQ104 swap the PQ104 1,3 Pin	
3	47	3V/5V	10/30	Compal	for power requset	Change PR301 to 13.7K modify output voltage	
4	47	3V/5V	10/30	Compal	for power requset	Change PR305 to 180K modify OCP	
5	47	3V/5V	10/30	Compal	for power requset	Change PR306 to 150K modify OCP	
6	47	3V/5V	10/30	Compal	for power requset	Change PR311 to 620K	
7	47	3V/5V	10/30	Compal	for power requset	Change PR315 to 604K modify sequence	
8	49	+1.1VSP	10/30	Compal	for power requset	Change PR510 to 19.1K modify OCP	
9	49	+1.2VALWP	10/30	Compal	for power requset	Change PR511 to 19.1K modify OCP	
10	46	Charger	10/30	Compal	for power requset	Del PR119	
11	51	CPU_CORE	10/30	Compal	for power requset	Change PC202 to B2 type for ME limit	
12	51	CPU_CORE	10/30	Compal	for power requset	Change PR223 to 17.8K and PR224 to 100K modify OCP	
13	51	CPU_CORE	10/30	Compal	for power requset	Change PR221,PR231 to 16.5K and PR217,PR233 to 4.02K for CPU_CORE compensation	
14	45	DC connector	10/30	Compal	for power requset	Add PR3,PD4,PC12 for ADP_ID function	
15	47	3V/5V	10/30	Compal	for power requset	Add PR317,PR318	
16	46	Charger	10/30	Compal	for power requset	Change net from +3VLP to +3VL	
17	49	+1.1VSP	10/30	Compal	for power requset	Change PR513 to 21K for HW power scquence.	
18	46	Charger	11/09	Compal	for power requset	Pop PR119 Unpop PR9	
19	50	0.9VSP	11/09	Compal	for power requset	Change PC601,PC605,PC611,PC603,PC613,PC614,PC612, PC201 for common part	
20	46	Charger	11/09	Compal	for power requset	Change PR112 to 0.015 Ohm	
21	49	+1.2VALWP	11/09	Compal	for power requset	Change PC508 to D2 size for ME limit	
22	51	CPU_CORE	12/05	Compal	for EMI requset	Add PR220,PR229 for EMI	
23	49	CPU_CORE	12/05	Compal	for EMI requset	Add PC218,PC226 for EMI	

Security Classification	Compal Secret Data		
Issued Date	2007/08/02	Deciphered Date	2008/08/02

THIS SHEET OF ENGINEERING DRAWING IS THE PROPRIETARY PROPERTY OF COMPAL ELECTRONICS, INC. AND CONTAINS CONFIDENTIAL AND TRADE SECRET INFORMATION. THIS SHEET MAY NOT BE TRANSFERED FROM THE CUSTODY OF THE COMPETENT DIVISION OF R&D DEPARTMENT EXCEPT AS AUTHORIZED BY COMPAL ELECTRONICS, INC. NEITHER THIS SHEET NOR THE INFORMATION IT CONTAINS MAY BE USED BY OR DISCLOSED TO ANY THIRD PARTY WITHOUT PRIOR WRITTEN CONSENT OF COMPAL ELECTRONICS, INC.

Compal Electronics, Inc.

Title: **Power Changed-List History-1**

Size: Custom | Document Number: LA-4111P | Rev: 0.1

Date: Thursday, February 21, 2008 | Sheet 53 of 52

Version Change List (P. I. R. List) for Power Circuit

Item	Page#	Title	Date	Request Owner	Issue Description	Solution Description	Rev.
1	46	Charger	12/05	Compal	for power requset	Change PR120 to 133K to change charger current	
2	47	3V/5V	12/05	Compal	for power requset	Change PR302 to 30.9K for common part	
3	47	3V/5V	12/05	Compal	for power requset	Change PR304 to 20K for common part	
4	48	+1.8VP	12/05	Compal	for power requset	Change PR408 to 18.2K modify OCP	
5	52	VGA_CORE	12/05	Compal	for power requset	Change PR306 to 150K modify OCP	
6	52	VGA_CORE	12/05	Compal	for power requset	Change PR714 to 0 Ohm	
7	52	VGA_CORE	12/05	Compal	for power requset	Add PR713 100 Ohm	
8	45	DC Connector /CPU_OTP	12/25	Compal	for power requset	Del PR9	
9	46	Charger	12/25	Compal	for power requset	Reconnect from BQ24740VREF to +3VL	
10	47	3V/5V	12/25	Compal	for power requset	Add PU302	
11	52	VGA_CORE	12/25	Compal	for power requset	Del PC714 Change PC715 to 0.022u & PR713 to 10 Ohm	
12	51	CPU_CORE	12/27	Compal	for power requset	ADD PC204 & PC211 68uF	
13	48	+1.8VP	1/2	Compal	for EMI requset	Add PR410 4.7ohm and PC410 680P	
14	48	+1.8VP	1/2	Compal	for EMI requset	Add PC405 680P and 408 3.3nF	
15	51	CPU_CORE	1/2	Compal	for EMI requset	ADD PC241 820p & PC242 3300p	
16	52	VGA_CORE	1/2	Compal	for EMI requset	Add PR710 and PC709	
17	51	CPU_CORE	1/2	Compal	for EMI requset	ADD PC243 to 3.3n PC244 to 820p	
18	51	CPU_CORE	1/3	Compal	for power requset	ADD PR234 & PQ115	

Security Classification	Compal Secret Data		
Issued Date	2007/08/02	Deciphered Date	2008/08/02

THIS SHEET OF ENGINEERING DRAWING IS THE PROPRIETARY PROPERTY OF COMPAL ELECTRONICS, INC. AND CONTAINS CONFIDENTIAL AND TRADE SECRET INFORMATION. THIS SHEET MAY NOT BE TRANSFERED FROM THE CUSTODY OF THE COMPETENT DIVISION OF R&D DEPARTMENT EXCEPT AS AUTHORIZED BY COMPAL ELECTRONICS, INC. NEITHER THIS SHEET NOR THE INFORMATION IT CONTAINS MAY BE USED BY OR DISCLOSED TO ANY THIRD PARTY WITHOUT PRIOR WRITTEN CONSENT OF COMPAL ELECTRONICS, INC.

Compal Electronics, Inc.

Title: **Power Changed-List History-1**

Size: Custom | Document Number: LA-4111P | Rev: 0.1

Date: Thursday, February 21, 2008 | Sheet 54 of 54

HW4 Product Improvement Record (P.I.R.)

1. Change R538 Pull high from +3VL to +3VALW
2. New add R563,R571 Pull high +3VS
3. Unmount BKOFF# Pull high R483
4. Unmount CPU_LDT_REQ# Pull high R318
5. Change LED1 P/N to SC500004C00
6. Change JP36 Pin2 from +5VS_LED to +5VALW_LED
7. Change C1012 & C1013 from 4700P to 1000P
8. Change R186 size from 0603 to 0402
9. Delete TV function and relation component
10. Add R554 for CIR pull high
11. Add C327 on BATT_OVT
12. Change L57 & L59 to 0603 BLM18PG121SN1D
13. exchange TV & WLAN mini card location
14. add LAN cable detect circuit
15. update ODD CONN footporint and symbol
16. delete Lid switch baord Conn
17. Change Cap sensor board power to +3VL to support Qplay boot

RTC

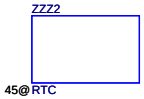

PCB

Security Classification	Compal Secret Data		
Issued Date	2007/5/18	Deciphered Date	2008/5/18

THIS SHEET OF ENGINEERING DRAWING IS THE PROPRIETARY PROPERTY OF COMPAL ELECTRONICS, INC. AND CONTAINS CONFIDENTIAL AND TRADE SECRET INFORMATION. THIS SHEET MAY NOT BE TRANSFERED FROM THE CUSTODY OF THE COMPETENT DIVISION OF R&D DEPARTMENT EXCEPT AS AUTHORIZED BY COMPAL ELECTRONICS, INC. NEITHER THIS SHEET NOR THE INFORMATION IT CONTAINS MAY BE USED BY OR DISCLOSED TO ANY THIRD PARTY WITHOUT PRIOR WRITTEN CONSENT OF COMPAL ELECTRONICS, INC.

Compal Electronics, Inc.

Title: PIR

Size | Document Number | Rev 0.4

Date: Thursday, February 21, 2008 | Sheet 55 of 54