Compal Confidential

Model Name :
File Name : LA-8671P

Compal Confidential

TN-Note Schematic Document

2012-10-04

REV:1A_1004A

AMY WEN

Security Classification	Compal Secret Data		
Issued Date	2010/08/25	Deciphered Date	2012/08/25

THIS SHEET OF ENGINEERING DRAWING IS THE PROPRIETARY PROPERTY OF COMPAL ELECTRONICS, INC. AND CONTAINS CONFIDENTIAL AND TRADE SECRET INFORMATION. THIS SHEET MAY NOT BE TRANSFERED FROM THE CUSTODY OF THE COMPETENT DIVISION OF R&D DEPARTMENT EXCEPT AS AUTHORIZED BY COMPAL ELECTRONICS, INC. NEITHER THIS SHEET NOR THE INFORMATION IT CONTAINS MAY BE USED BY OR DISCLOSED TO ANY THIRD PARTY WITHOUT PRIOR WRITTEN CONSENT OF COMPAL ELECTRONICS, INC.

Compal Electronics, Inc.

Title: Cover Page

Size: Custom | Document Number: LA-8671P_SDV | Rev: 1A

Date: Thursday, October 04, 2012 | Sheet 1 of 50

Compal Confidential

Model Name : TN-Note
File Name : Block Diagram

CPU2@	SA00005L5H0	S	IC	AV8063801058401	SR0N9	L1	1.8G	A39!
CPU3@	SA00005K6I0	S	IC	AV8063801058002	SR0N8	L1	1.7G	A39!
CPU4@	SA00005L9F0	S	IC	AV8063801057801	SR0N7	L1	1.8G	A39!
CPU5@	SA00005K5E0	S	IC	AV8063801057605	SR0N6	L1	1.9G	A39!
CPU6@	SA00005UH60	S	IC	AV8062701313000	SR0U3	J1	1.4G	A39!

Sub-board

1. PWR Board (LS-8671P)
2. HDD Board (LS-8672P)
3. P-Sensor1 Board (LS-8673P)
4. P-Sensor2 Board (LS-8674P)

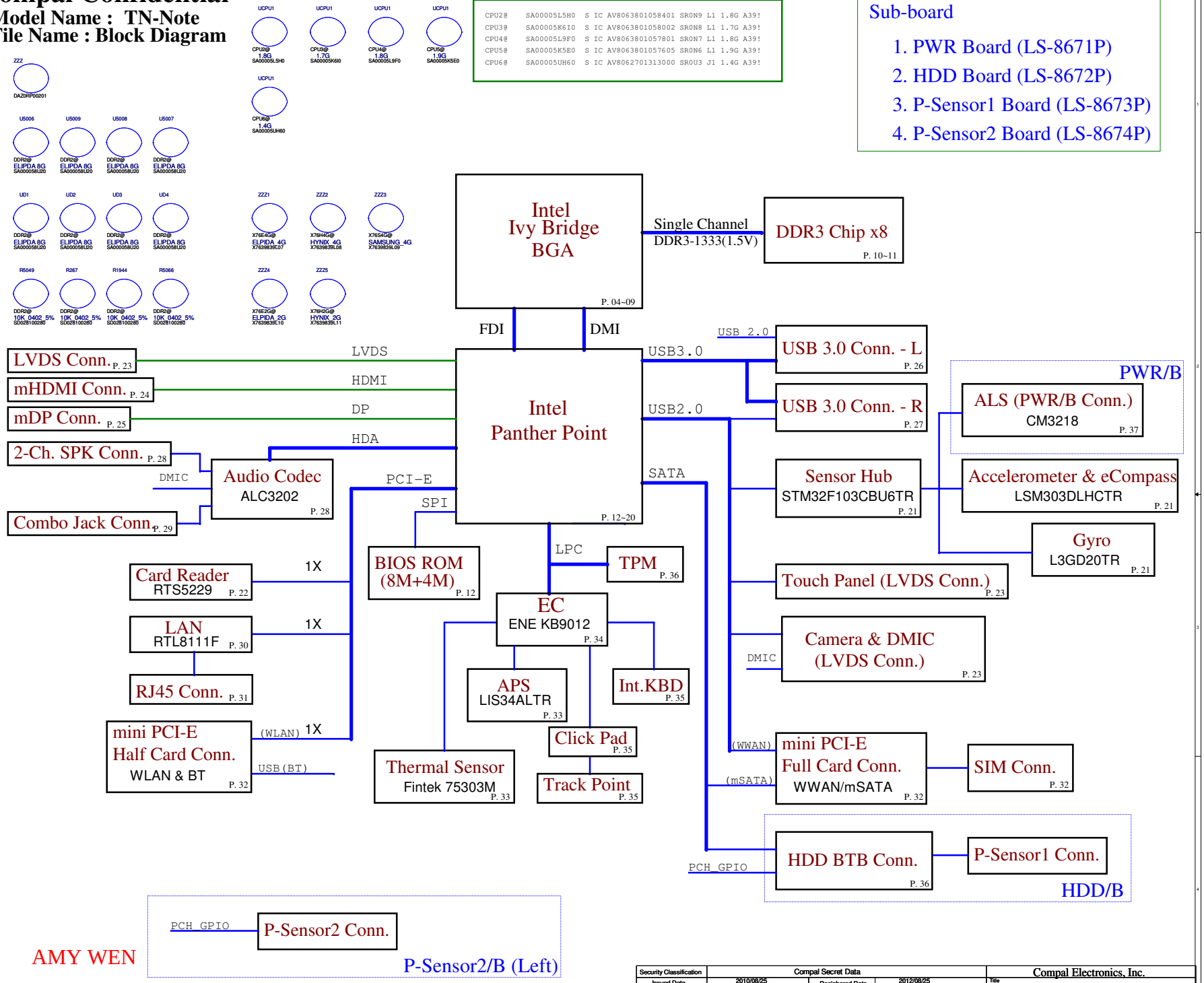

AMY WEN

Security Classification	Compal Secret Data		Compal Electronics, Inc.
Issued Date	2010/08/25	Deciphered Date 2012/08/25	Title: TN-Note Block Diagram
			Size: Custom; Document Number: LA-8671P_SDV; Rev: 1A
			Date: Thursday, October 04, 2012; Sheet 2 of 50

THIS SHEET OF ENGINEERING DRAWING IS THE PROPRIETARY PROPERTY OF COMPAL ELECTRONICS, INC. AND CONTAINS CONFIDENTIAL AND TRADE SECRET INFORMATION. THIS SHEET MAY NOT BE TRANSFERED FROM THE CUSTODY OF THE COMPETENT DIVISION OF R&D DEPARTMENT EXCEPT AS AUTHORIZED BY COMPAL ELECTRONICS, INC. NEITHER THIS SHEET NOR THE INFORMATION IT CONTAINS MAY BE USED BY OR DISCLOSED TO ANY THIRD PARTY WITHOUT PRIOR WRITTEN CONSENT OF COMPAL ELECTRONICS, INC.

Voltage Rails

Power plane / State	+B	+5VALW +3VALW	+1.5V	+3VM +1.05VM	+5VS +3VS +1.8VS +1.5VS +1.05VS +VCC_GFXCORE_AXG +CPU_CORE +VCCSA +0.75VS
S0	O	O	O	O	O
S3	O	O	O	O	X
M3	O	O	O	O	X
S4/S5 - AC	O	O	X	X	X
S4/S5 - BATT ONLY	O	X	X	X	X
S4/S5 - NO AC & BATT	X	X	X	X	X

STATE \ SIGNAL	SLP_S3#	SLP_S4#	SLP_S5#	+VALW	+V	+VS
Full ON	H	H	H	ON	ON	ON
S3 (Suspend to RAM)	L	H	H	ON	ON	OFF
S4 (Suspend to Disk)	L	L	H	ON	OFF	OFF
S5 (Soft OFF)	L	L	L	ON	OFF	OFF

BOARD ID Table

Board ID	PCB Revision
0	0.1
1	0.2
2	0.3
3	0.4
4	0.5
5	
6	
7	

EC SM Bus1 address

Device	Address	HEX
Smart Battery	0001-011xb	16H
Charger	0001-0010b	12H

EC SM Bus2 address

Device	Address	HEX
Thermal sensor	1001-101x b	9AH
PCH (SML1DATA / GPIO75)	1001-0110 b	96H

SM Bus Controller

Device	Address	HEX
Security Rom	1010-100x b	A8 H
DDR DIMM0	1010-000x b	A0 H

BOM Structure

	SDV	FVT	SIT	SVT	SOVP
@ : No Stuff					
ME@ : ME components					
CPUx@ : CPU SKU	V	V	V	V	V
DDRx@ : RAM SKU	V	V	V	V	V
SBA@ : SBA	V	V	V	V	V
NOSBA@ : NO SBA					
ID4@ : Intel Deep S4	V				
AOAC@ : AOAC	V	V	V	V	V
TPM@ : TPM		V	V	V	V
Short@ : 0ohm short pad					

SM Bus Controller 0

Device	Address	HEX
No-use	No-use	No-use

Sensor HUB

Device	Address	HEX
ALS	0100-100x b	48h
APS	0011-001x b	32h
Gyroscope	0110-101xb	6Ah
e-Compass	0011-110x b	3Ch

USB3.0	USB2.0	NOTE
1	0	
2	1 *	USB3.0/2.0 Conn
3	2	USB3.0/2.0 Conn
4	3	
	4	Sensor Hub
	5	USB Camera
	6	X
	7	X
	8	Touch Panel
	9 *	WWAN
	10	WLAN
	11	Finger Printer**
	12	
	13	Bluetooth**

* Debug Port
** Not Use

AMY WEN

Security Classification	Compal Secret Data		
Issued Date	2011/05/16	Deciphered Date	2013/05/16

THIS SHEET OF ENGINEERING DRAWING IS THE PROPRIETARY PROPERTY OF COMPAL ELECTRONICS, INC. AND CONTAINS CONFIDENTIAL AND TRADE SECRET INFORMATION. THIS SHEET MAY NOT BE TRANSFERED FROM THE CUSTODY OF THE COMPETENT DIVISION OF R&D DEPARTMENT EXCEPT AS AUTHORIZED BY COMPAL ELECTRONICS, INC. NEITHER THIS SHEET NOR THE INFORMATION IT CONTAINS MAY BE USED BY OR DISCLOSED TO ANY THIRD PARTY WITHOUT PRIOR WRITTEN CONSENT OF COMPAL ELECTRONICS, INC.

Compal Electronics, Inc.

Title: Cover Sheet

Size: Custom | Document Number: LA-8671P | Rev: 1A

Date: Thursday, October 04, 2012 | Sheet 3 of 50

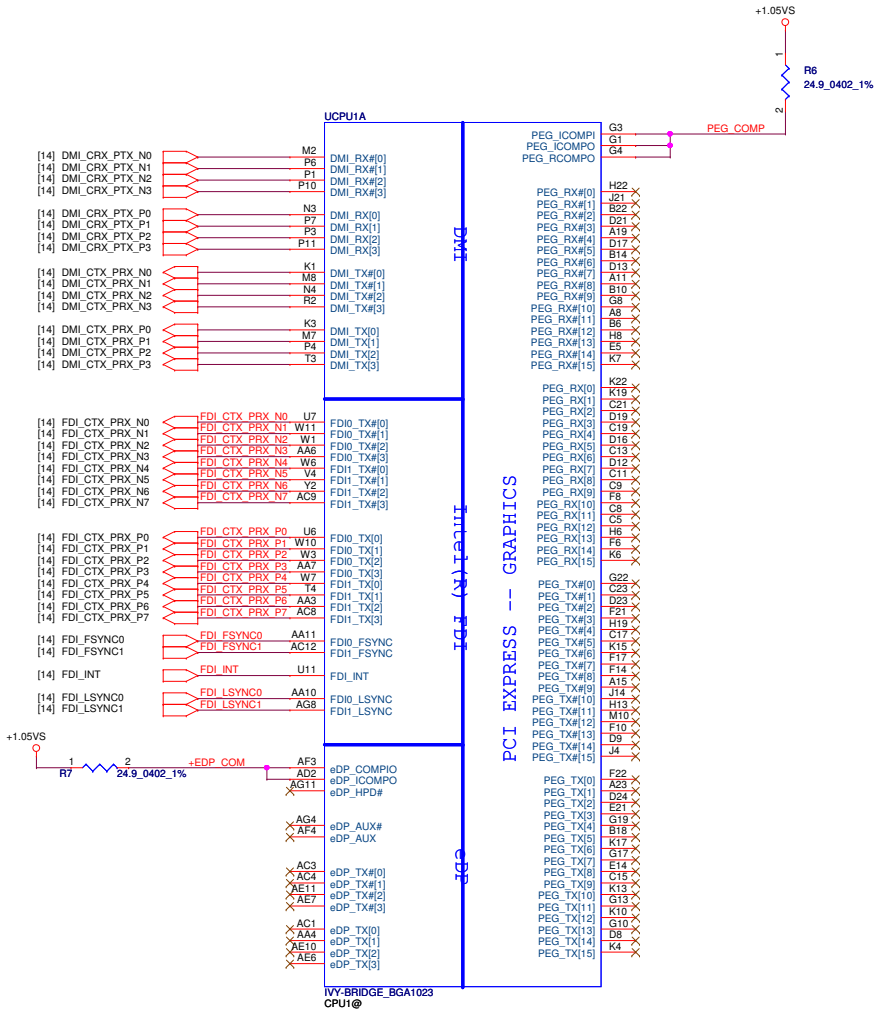

PEG_ICOMPI and RCOMPO signals should be shorted and routed
with - max length = 500 mils - typical impedance = 43 mohms
PEG_ICOMPO signals should be routed with - max length = 500 mils
- typical impedance = 14.5 mohms

PEG Static Lane Reversal - CFG2 is for the 16x	
CFG2	* 1: Normal Operation; Lane # definition matches socket pin map definition 0:Lane Reversed

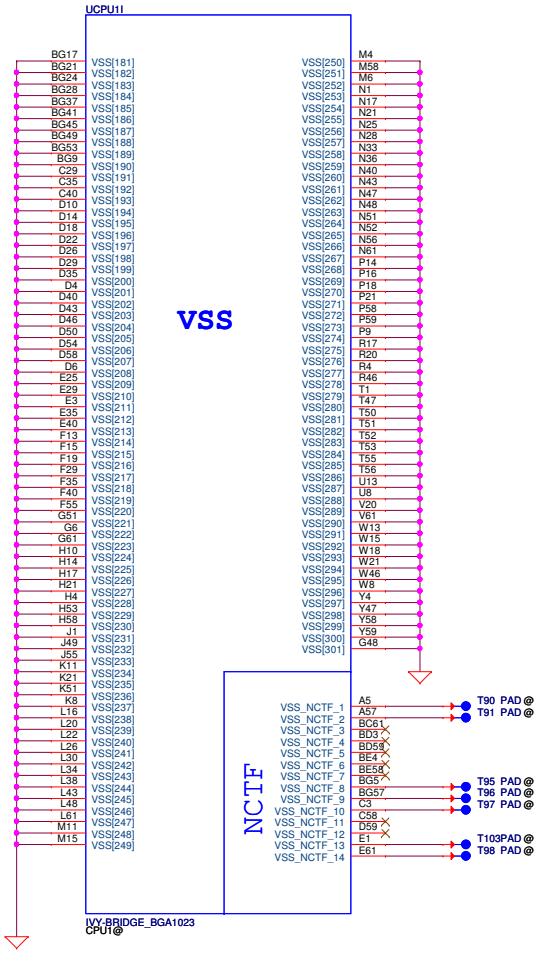

AMY WEN

Security Classification	Compal Secret Data			Compal Electronics, Inc.
Issued Date	2011/05/16	Deciphered Date	2013/05/16	Title: PROCESSOR(1/6) DMI,FDI,PEG
THIS SHEET OF ENGINEERING DRAWING IS THE PROPRIETARY PROPERTY OF COMPAL ELECTRONICS, INC. AND CONTAINS CONFIDENTIAL AND TRADE SECRET INFORMATION. THIS SHEET MAY NOT BE TRANSFERED FROM THE CUSTODY OF THE COMPETENT DIVISION OF R&D DEPARTMENT EXCEPT AS AUTHORIZED BY COMPAL ELECTRONICS, INC. NEITHER THIS SHEET NOR THE INFORMATION IT CONTAINS MAY BE USED BY OR DISCLOSED TO ANY THIRD PARTY WITHOUT PRIOR WRITTEN CONSENT OF COMPAL ELECTRONICS, INC.				Size: Custom; Document Number: LA-8671P_SDV; Rev: 1.0
				Date: Thursday, October 04, 2012; Sheet 4 of 50

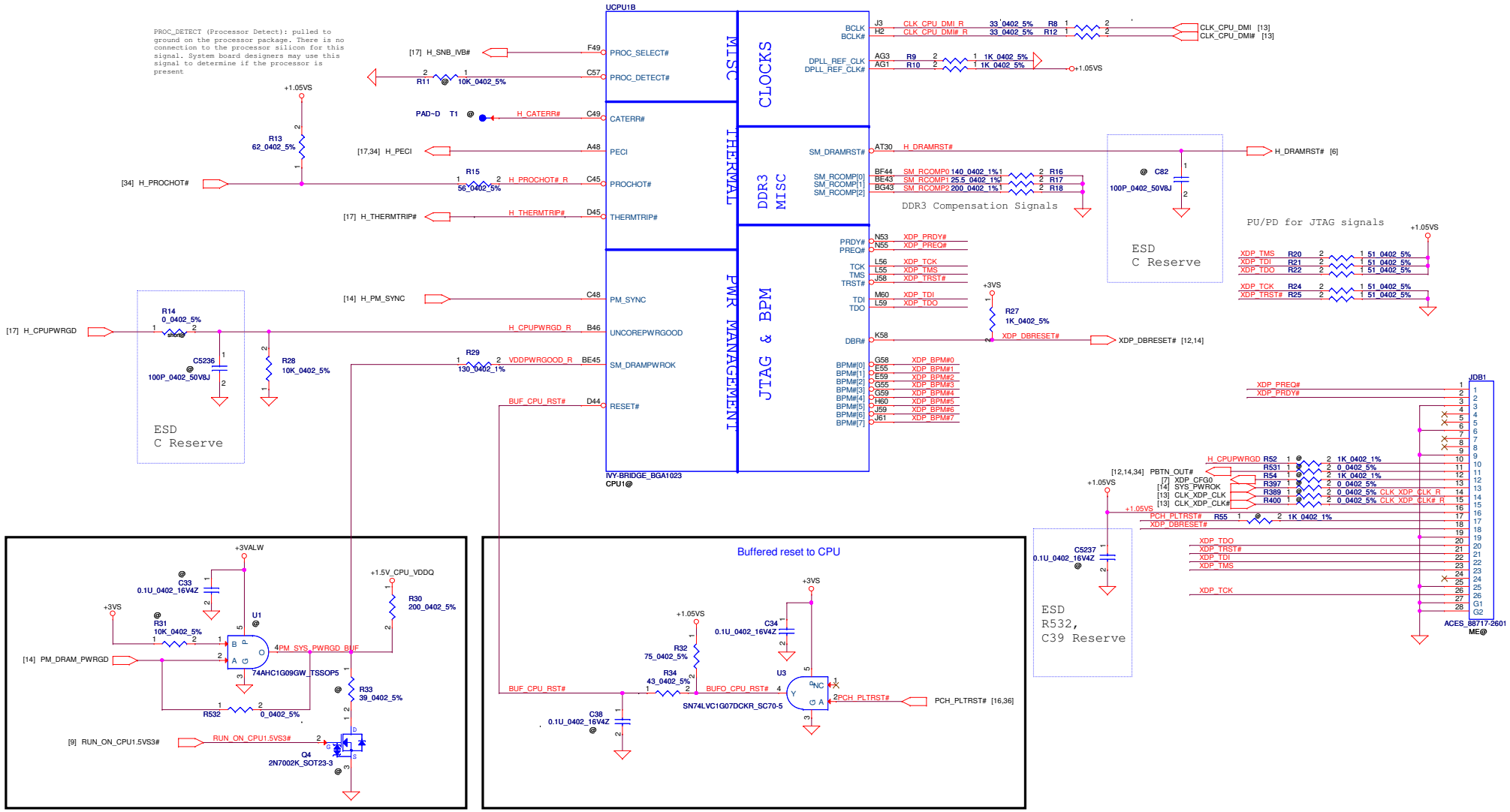

AMY WEN

Security Classification	Compal Secret Data		
Issued Date	2011/05/16	Deciphered Date	2013/05/16

THIS SHEET OF ENGINEERING DRAWING IS THE PROPRIETARY PROPERTY OF COMPAL ELECTRONICS, INC. AND CONTAINS CONFIDENTIAL AND TRADE SECRET INFORMATION. THIS SHEET MAY NOT BE TRANSFERED FROM THE CUSTODY OF THE COMPETENT DIVISION OF R&D DEPARTMENT EXCEPT AS AUTHORIZED BY COMPAL ELECTRONICS, INC. NEITHER THIS SHEET NOR THE INFORMATION IT CONTAINS MAY BE USED BY OR DISCLOSED TO ANY THIRD PARTY WITHOUT PRIOR WRITTEN CONSENT OF COMPAL ELECTRONICS, INC.

Compal Electronics, Inc.

Title: PROCESSOR(2/6) PM,XDP,CLK

Size: Custom | Document Number: LA-8671P_SDV | Rev: 1.0

Date: Thursday, October 04, 2012 | Sheet 5 of 50

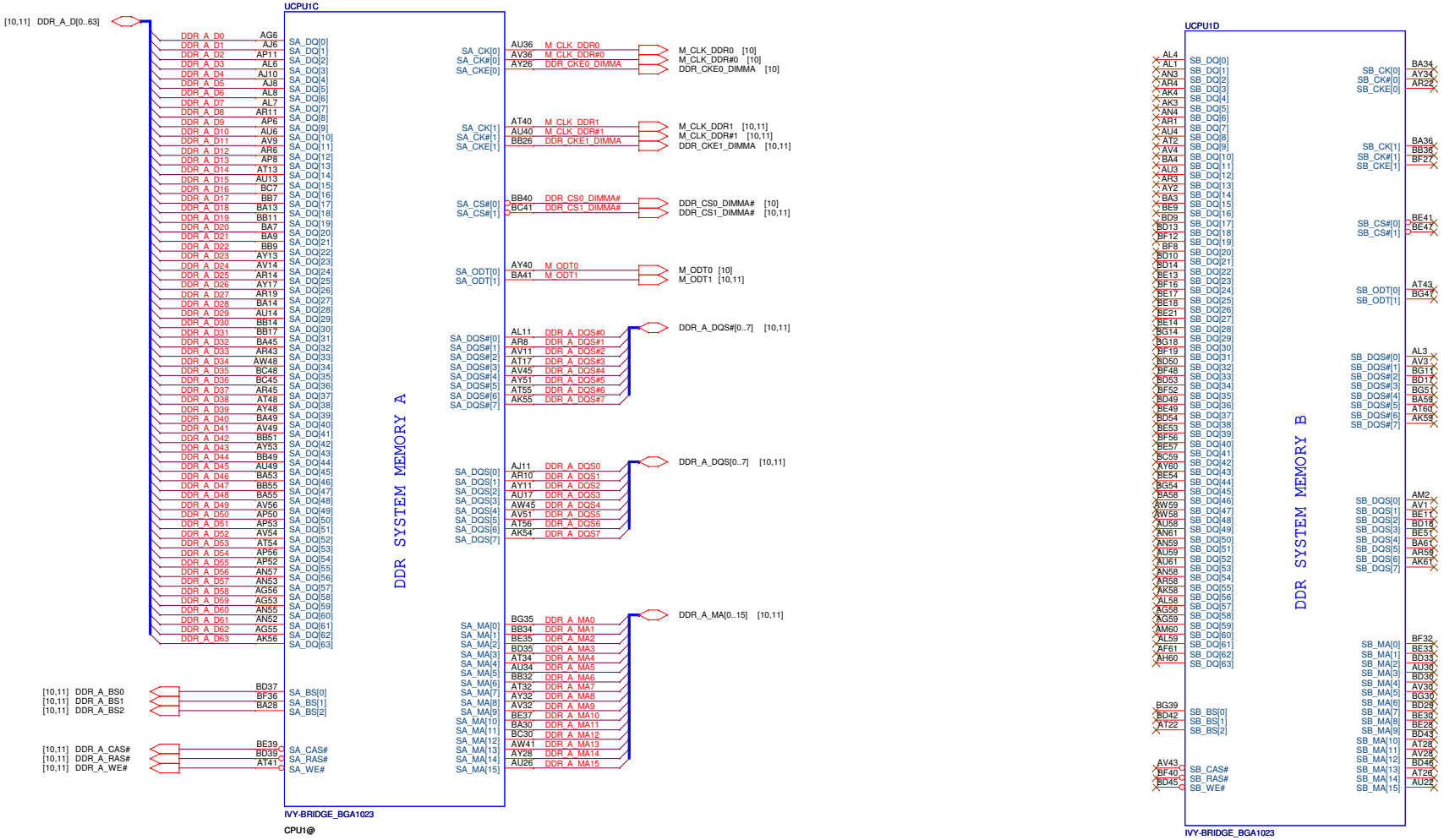

AMY WEN

Security Classification	Compal Secret Data			Compal Electronics, Inc.
Issued Date	2011/05/16	Deciphered Date	2013/05/16	Title: PROCESSOR(3/6) DDRIII

THIS SHEET OF ENGINEERING DRAWING IS THE PROPRIETARY PROPERTY OF COMPAL ELECTRONICS, INC. AND CONTAINS CONFIDENTIAL AND TRADE SECRET INFORMATION. THIS SHEET MAY NOT BE TRANSFERED FROM THE CUSTODY OF THE COMPETENT DIVISION OF R&D DEPARTMENT EXCEPT AS AUTHORIZED BY COMPAL ELECTRONICS, INC. NEITHER THIS SHEET NOR THE INFORMATION IT CONTAINS MAY BE USED BY OR DISCLOSED TO ANY THIRD PARTY WITHOUT PRIOR WRITTEN CONSENT OF COMPAL ELECTRONICS, INC.

Size	Document Number	Rev
Custom	LA-8671P_SDV	1.0

Date: Thursday, October 04, 2012 Sheet 6 of 50

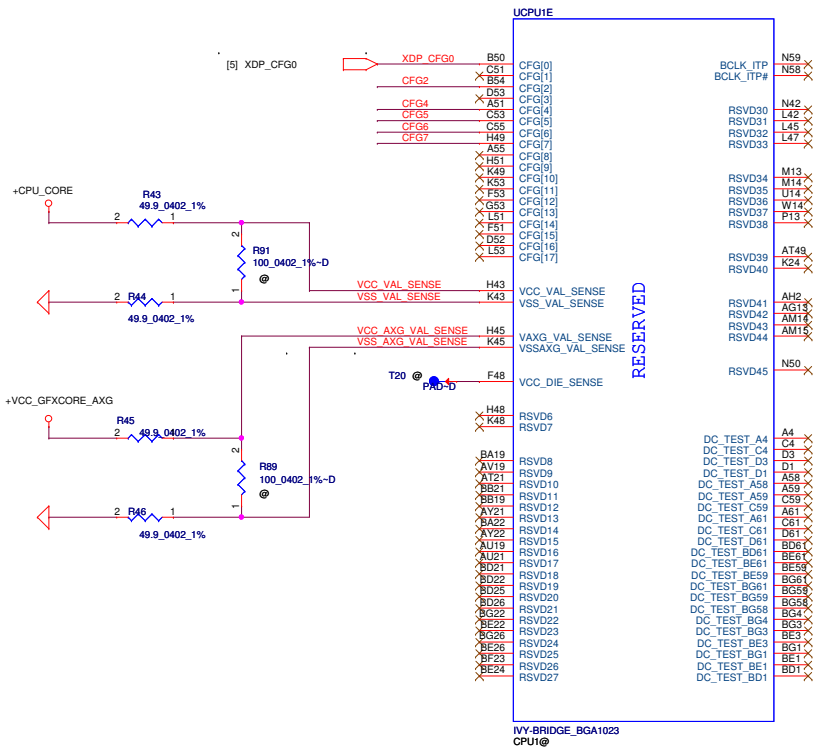

CFG Straps for Processor

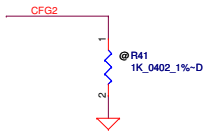

PEG Static Lane Reversal - CFG2 is for the 16x	
CFG2	*1:(Default) Normal Operation; Lane # definition matches socket pin map definition 0:Lane Reversed

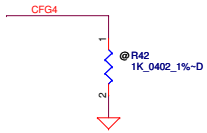

Display Port Presence Strap	
CFG4	* 1 : Disabled; No Physical Display Port attached to Embedded Display Port 0 : Enabled; An external Display Port device is connected to the Embedded Display Port

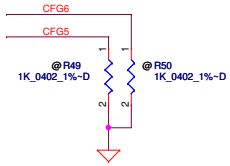

PCIE Port Bifurcation Straps	
CFG[6:5]	*11: (Default) x16 - Device 1 functions 1 and 2 disabled 10: x8, x8 - Device 1 function 1 enabled ; function 2 disabled 01: Reserved - (Device 1 function 1 disabled ; function 2 enabled) 00: x8,x4,x4 - Device 1 functions 1 and 2 enabled

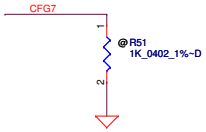

PEG DEFER TRAINING	
CFG7	*1: (Default) PEG Train immediately following xxRESETB de assertion 0: PEG Wait for BIOS for training

AMY WEN

Security Classification	Compal Secret Data			Compal Electronics, Inc.
Issued Date	2011/05/16	Deciphered Date	2013/05/16	Title: PROCESSOR(4/6) RSVD,CFG
				Size: Custom; Document Number: LA-8671P_SDV; Rev: 1.0
				Date: Thursday, October 04, 2012; Sheet 7 of 50

THIS SHEET OF ENGINEERING DRAWING IS THE PROPRIETARY PROPERTY OF COMPAL ELECTRONICS, INC. AND CONTAINS CONFIDENTIAL AND TRADE SECRET INFORMATION. THIS SHEET MAY NOT BE TRANSFERED FROM THE CUSTODY OF THE COMPETENT DIVISION OF R&D DEPARTMENT EXCEPT AS AUTHORIZED BY COMPAL ELECTRONICS, INC. NEITHER THIS SHEET NOR THE INFORMATION IT CONTAINS MAY BE USED BY OR DISCLOSED TO ANY THIRD PARTY WITHOUT PRIOR WRITTEN CONSENT OF COMPAL ELECTRONICS, INC.

POWER

CPU_CORE
GFX_CORE
VCCP1.05

VGA_CORE
All Capacitor place on Power side.

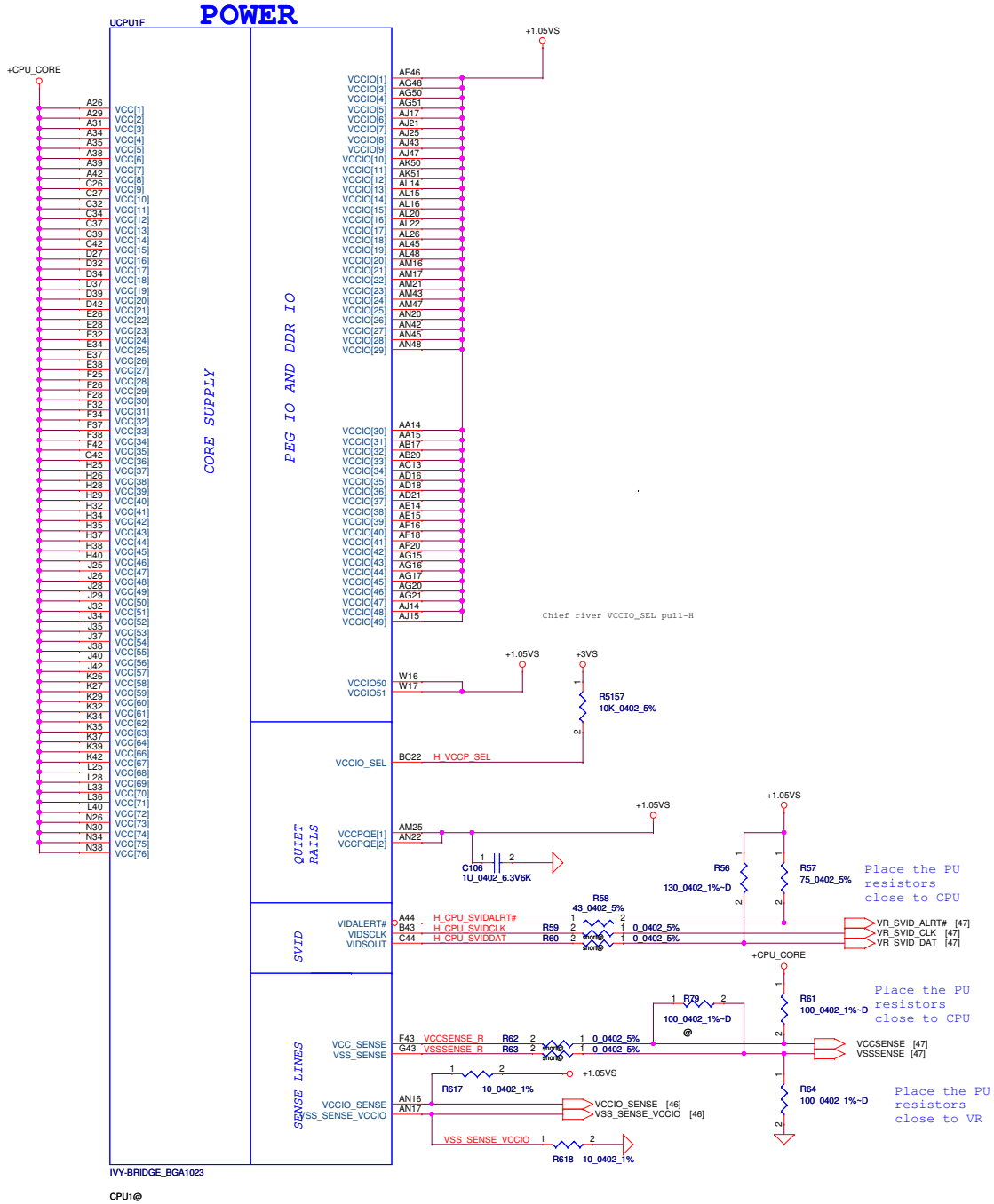

AMY WEN

Security Classification	Compal Secret Data			Compal Electronics, Inc.
Issued Date	2011/05/16	Deciphered Date	2013/05/16	Title: PROCESSOR(5/6) PWR,BYPASS
				Size: Custom; Document Number: LA-8671P_SDV; Rev: 1.0
				Date: Thursday, October 04, 2012; Sheet 8 of 50

THIS SHEET OF ENGINEERING DRAWING IS THE PROPRIETARY PROPERTY OF COMPAL ELECTRONICS, INC. AND CONTAINS CONFIDENTIAL AND TRADE SECRET INFORMATION. THIS SHEET MAY NOT BE TRANSFERED FROM THE CUSTODY OF THE COMPETENT DIVISION OF R&D DEPARTMENT EXCEPT AS AUTHORIZED BY COMPAL ELECTRONICS, INC. NEITHER THIS SHEET NOR THE INFORMATION IT CONTAINS MAY BE USED BY OR DISCLOSED TO ANY THIRD PARTY WITHOUT PRIOR WRITTEN CONSENT OF COMPAL ELECTRONICS, INC.

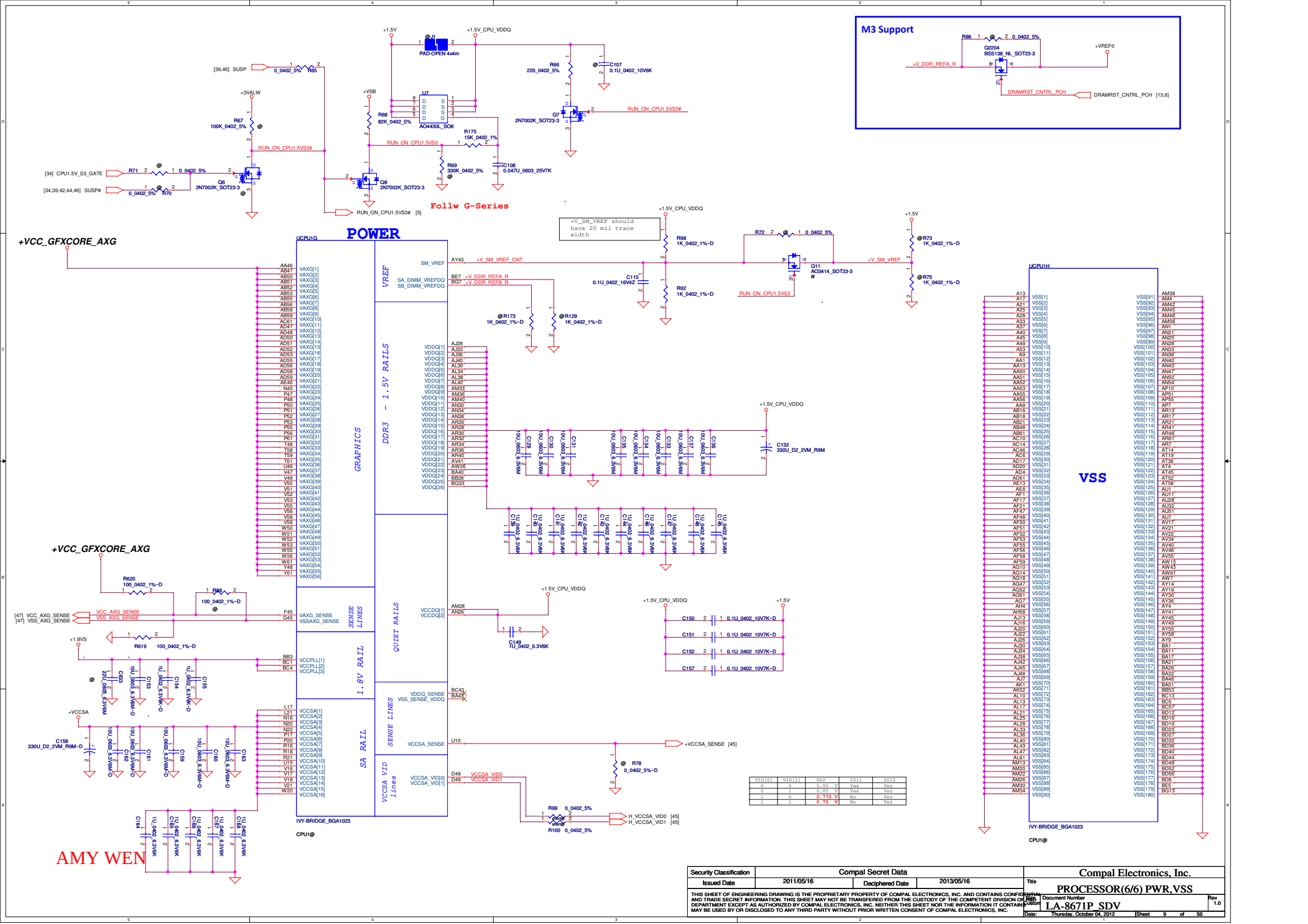

VID[0]	VID[1]	ULV	2011	2012
0	0	0.90 V	Yes	Yes
0	1	0.85 V	Yes	Yes
1	0	0.775 V	No	Yes
1	1	0.75 V	No	Yes

Security Classification	Compal Secret Data		
Issued Date	2011/05/16	Deciphered Date	2013/05/16

THIS SHEET OF ENGINEERING DRAWING IS THE PROPRIETARY PROPERTY OF COMPAL ELECTRONICS, INC. AND CONTAINS CONFIDENTIAL AND TRADE SECRET INFORMATION. THIS SHEET MAY NOT BE TRANSFERED FROM THE CUSTODY OF THE COMPETENT DIVISION OF R&D DEPARTMENT EXCEPT AS AUTHORIZED BY COMPAL ELECTRONICS, INC. NEITHER THIS SHEET NOR THE INFORMATION IT CONTAINS MAY BE USED BY OR DISCLOSED TO ANY THIRD PARTY WITHOUT PRIOR WRITTEN CONSENT OF COMPAL ELECTRONICS, INC.

Compal Electronics, Inc.

Title: PROCESSOR(6/6) PWR,VSS

Document Number: LA-8671P_SDV

Rev: 1.0

Date: Thursday, October 04, 2012 | Sheet 9 of 50

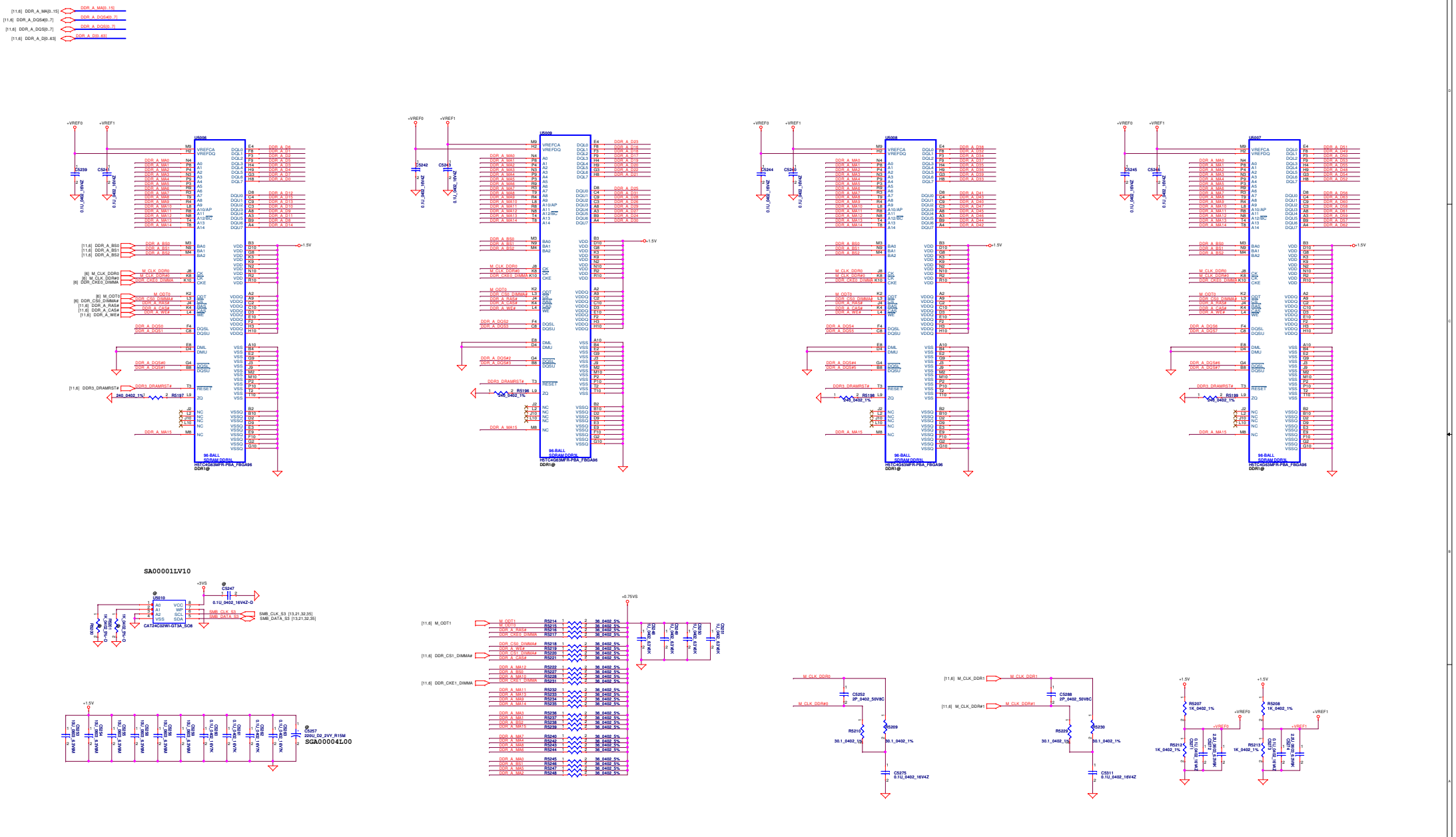

Security Classification	Compal Secret Data		
Issued Date	2011/05/16	Deciphered Date	2013/05/16

THIS SHEET OF ENGINEERING DRAWING IS THE PROPRIETARY PROPERTY OF COMPAL ELECTRONICS, INC. AND CONTAINS CONFIDENTIAL AND TRADE SECRET INFORMATION. THIS SHEET MAY NOT BE TRANSFERRED FROM THE CUSTODY OF THE COMPETENT DIVISION OF R&D DEPARTMENT EXCEPT AS AUTHORIZED BY COMPAL ELECTRONICS, INC. NEITHER THIS SHEET NOR THE INFORMATION IT CONTAINS MAY BE USED BY OR DISCLOSED TO ANY THIRD PARTY WITHOUT PRIOR WRITTEN CONSENT OF COMPAL ELECTRONICS, INC.

Compal Electronics, Inc.

Title: DDRIII A Chip 2Gbit X16-I

Size: D | Document Number: LA-8671P SDV | Rev: 1.0

Date: Thursday, October 04, 2012 | Sheet 10 of 50

AMY WEN

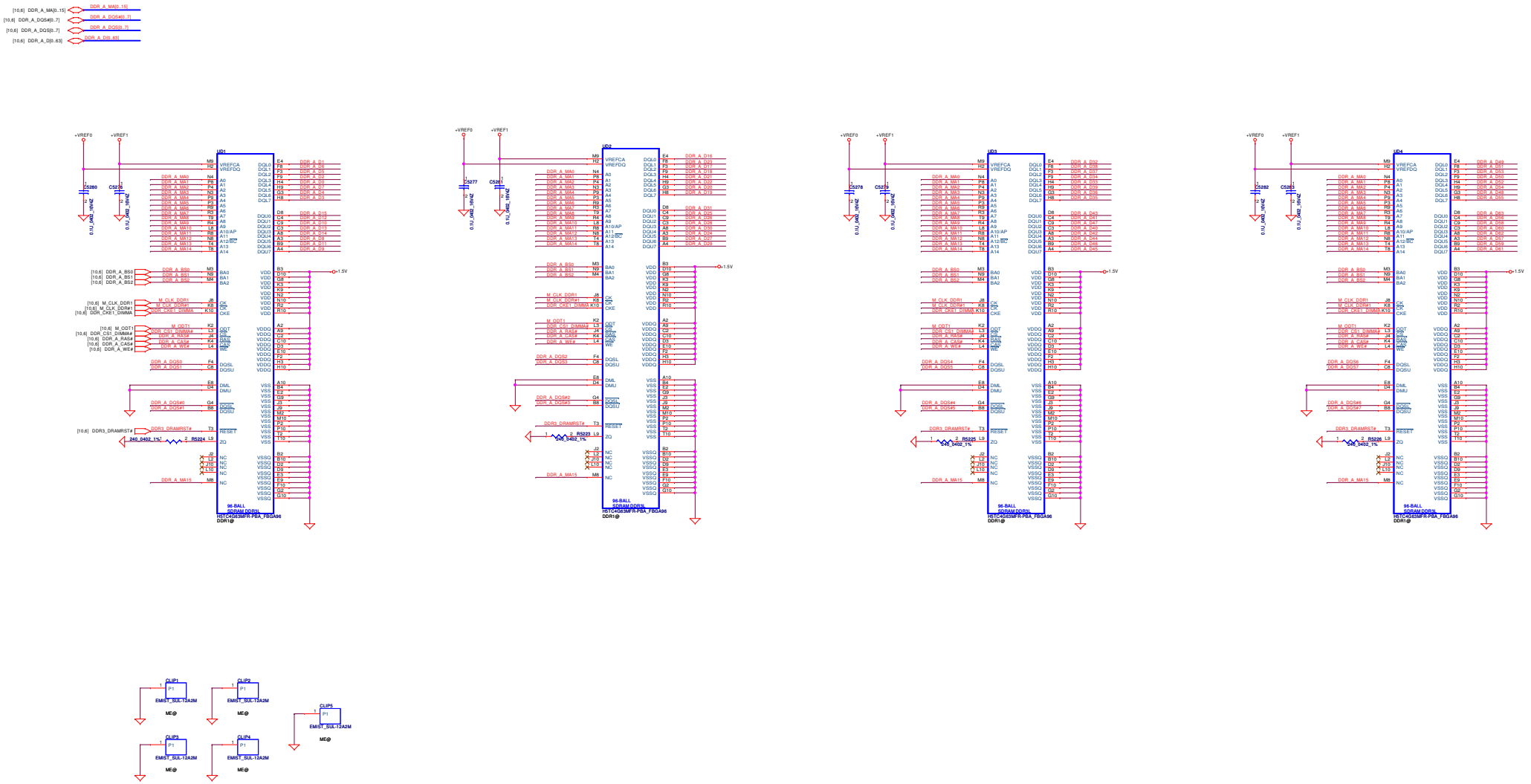

Security Classification	Compal Secret Data		Compal Electronics, Inc.
Issued Date	2011/05/16	Deciphered Date 2013/05/16	Title: DDRIII A Chip 2Gbit X16-II

THIS SHEET OF ENGINEERING DRAWING IS THE PROPRIETARY PROPERTY OF COMPAL ELECTRONICS, INC. AND CONTAINS CONFIDENTIAL AND TRADE SECRET INFORMATION. THIS SHEET MAY NOT BE TRANSFERRED FROM THE CUSTODY OF THE COMPETENT DIVISION OF R&D DEPARTMENT EXCEPT AS AUTHORIZED BY COMPAL ELECTRONICS, INC. NEITHER THIS SHEET NOR THE INFORMATION IT CONTAINS MAY BE USED BY OR DISCLOSED TO ANY THIRD PARTY WITHOUT PRIOR WRITTEN CONSENT OF COMPAL ELECTRONICS, INC.

Size	Document Number	Rev
D	LA-8671P SDV	1.0

Date: Thursday, October 04, 2012 Sheet 11 of 50

AMY WEN

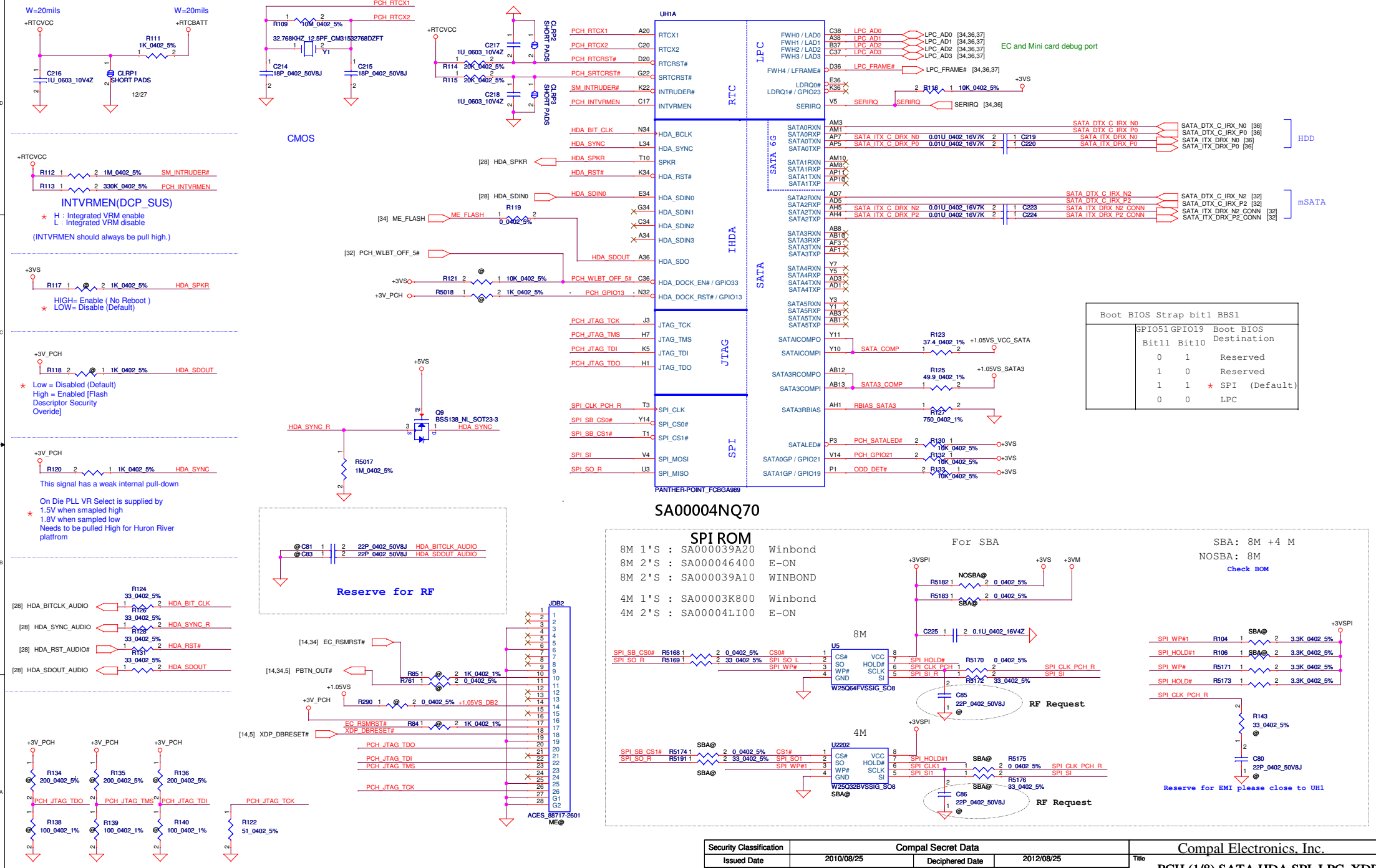

Security Classification	Compal Secret Data		
Issued Date	2010/08/25	Deciphered Date	2012/08/25

THIS SHEET OF ENGINEERING DRAWING IS THE PROPRIETARY PROPERTY OF COMPAL ELECTRONICS, INC. AND CONTAINS CONFIDENTIAL AND TRADE SECRET INFORMATION. THIS SHEET MAY NOT BE TRANSFERED FROM THE CUSTODY OF THE COMPETENT DIVISION OF R&D DEPARTMENT EXCEPT AS AUTHORIZED BY COMPAL ELECTRONICS, INC. NEITHER THIS SHEET NOR THE INFORMATION IT CONTAINS MAY BE USED BY OR DISCLOSED TO ANY THIRD PARTY WITHOUT PRIOR WRITTEN CONSENT OF COMPAL ELECTRONICS, INC.

Compal Electronics, Inc.

Title: PCH (1/8) SATA,HDA,SPI, LPC, XDP

Size: Custom | Document Number: LA-8671P_SDV | Rev: 1.0

Date: Thursday, October 04, 2012 | Sheet 12 of 50

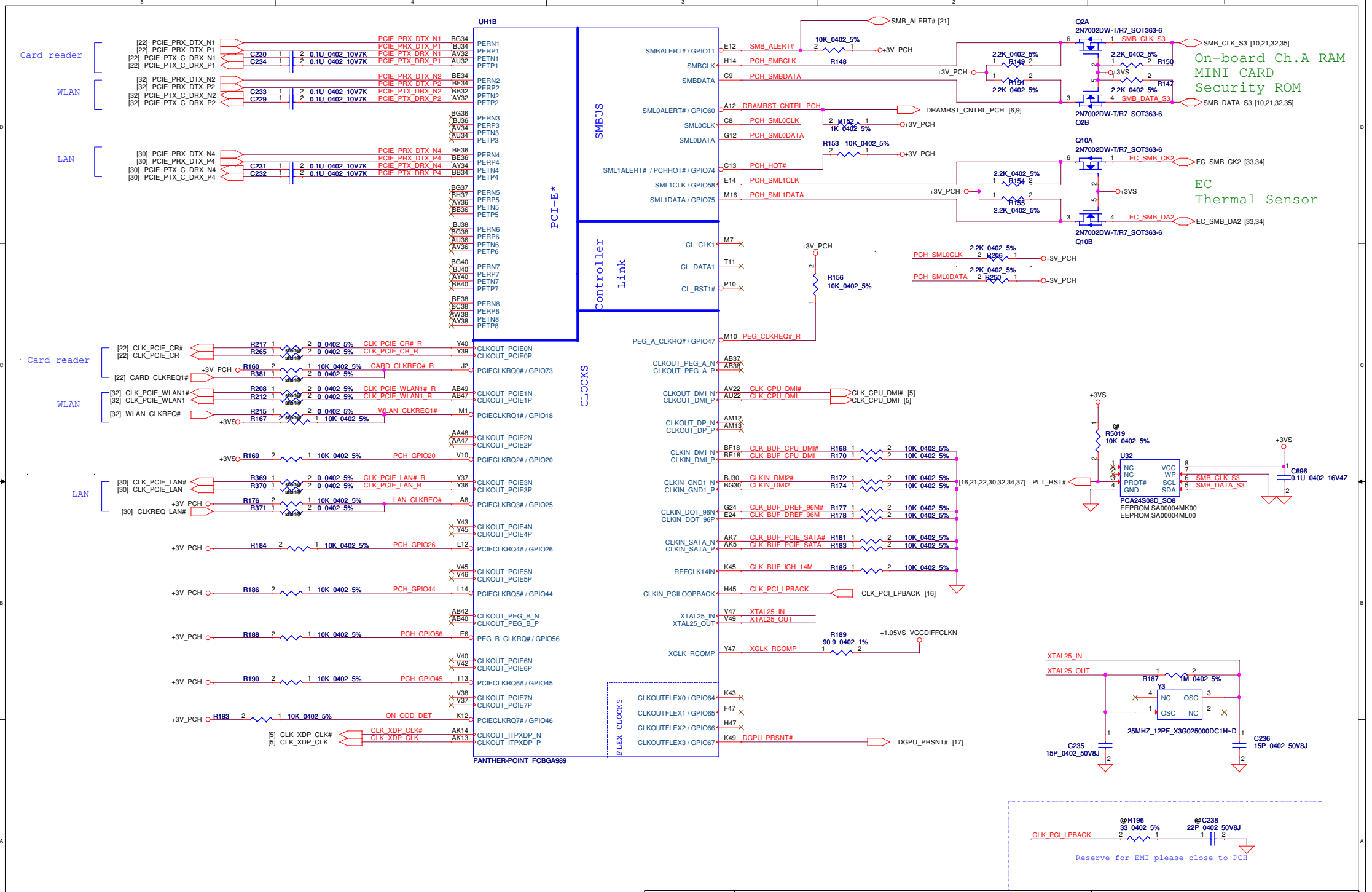

AMY WEN

Security Classification	Compal Secret Data		
Issued Date	2010/08/25	Deciphered Date	2012/08/25

THIS SHEET OF ENGINEERING DRAWING IS THE PROPRIETARY PROPERTY OF COMPAL ELECTRONICS, INC. AND CONTAINS CONFIDENTIAL AND TRADE SECRET INFORMATION. THIS SHEET MAY NOT BE TRANSFERED FROM THE CUSTODY OF THE COMPETENT DIVISION OF R&D DEPARTMENT EXCEPT AS AUTHORIZED BY COMPAL ELECTRONICS, INC. NEITHER THIS SHEET NOR THE INFORMATION IT CONTAINS MAY BE USED BY OR DISCLOSED TO ANY THIRD PARTY WITHOUT PRIOR WRITTEN CONSENT OF COMPAL ELECTRONICS, INC.

Compal Electronics, Inc.

Title: PCH (2/8) PCIE, SMBUS, CLK

Size: Custom | Document Number: LA-8671P_SDV | Rev: 1.0

Date: Thursday, October 04, 2012 | Sheet 13 of 50

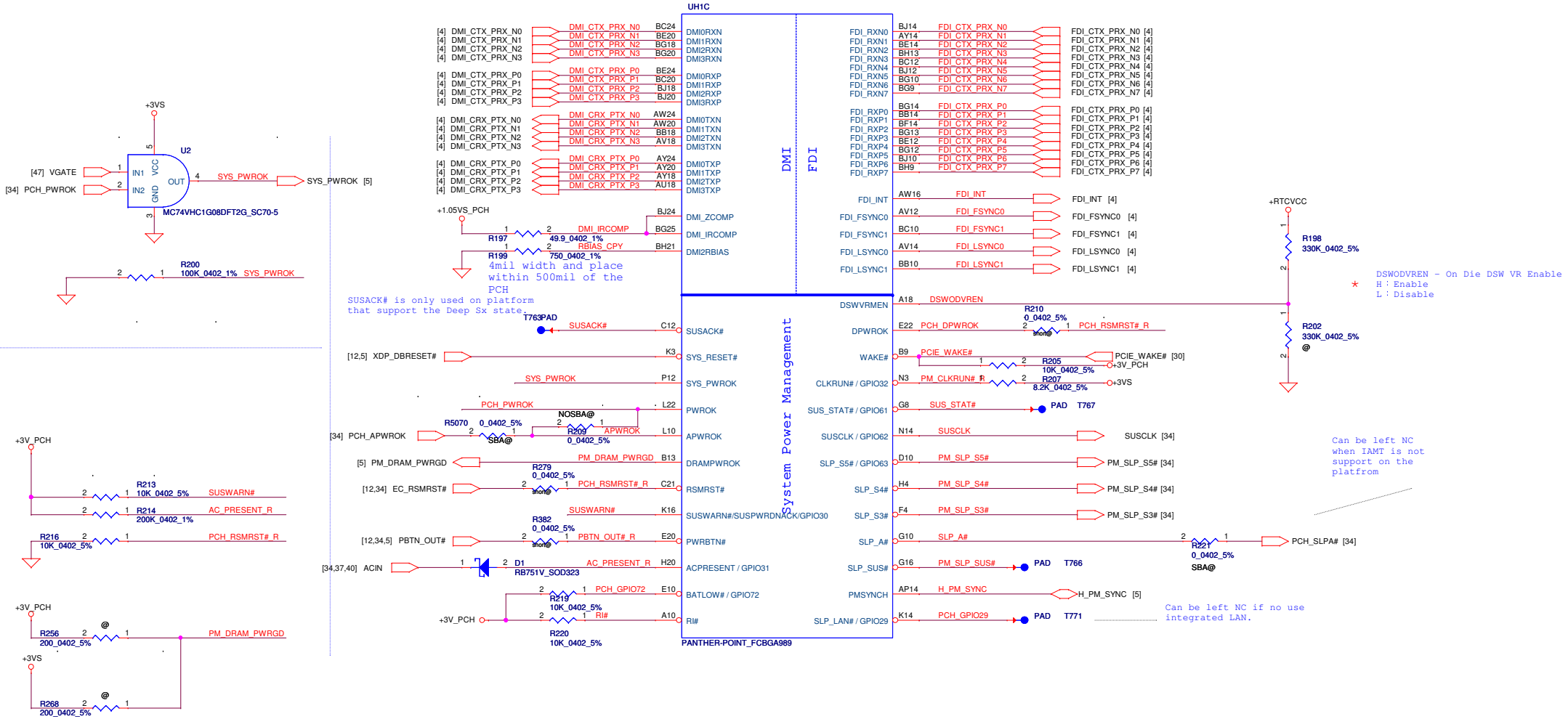

AMY WEN

Security Classification	Compal Secret Data		
Issued Date	2010/08/25	Deciphered Date	2012/08/25

THIS SHEET OF ENGINEERING DRAWING IS THE PROPRIETARY PROPERTY OF COMPAL ELECTRONICS, INC. AND CONTAINS CONFIDENTIAL AND TRADE SECRET INFORMATION. THIS SHEET MAY NOT BE TRANSFERED FROM THE CUSTODY OF THE COMPETENT DIVISION OF R&D DEPARTMENT EXCEPT AS AUTHORIZED BY COMPAL ELECTRONICS, INC. NEITHER THIS SHEET NOR THE INFORMATION IT CONTAINS MAY BE USED BY OR DISCLOSED TO ANY THIRD PARTY WITHOUT PRIOR WRITTEN CONSENT OF COMPAL ELECTRONICS, INC.

Compal Electronics, Inc.

Title: PCH (3/8) DMI,FDI,PM,

Size: Custom | Document Number: LA-8671P_SDV | Rev: 1.0

Date: Thursday, October 04, 2012 | Sheet 14 of 50

PORT	STRAP
LVDS	L_DDC_DATA
PORT B	SDVO_CTRLDATA
PORT C	DDPC_CTRLDATA
PORT D	DDPD_CTRLDATA

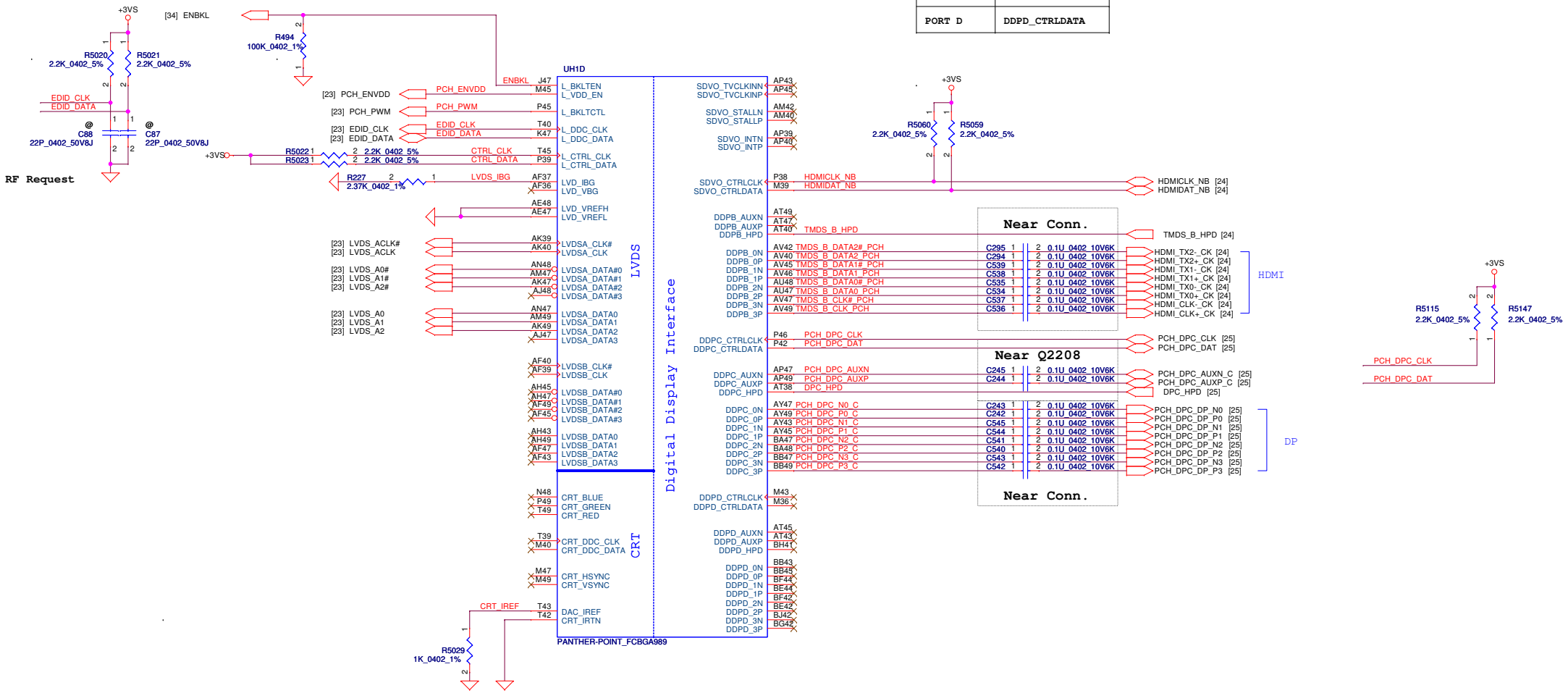

AMY WEN

Security Classification	Compal Secret Data		
Issued Date	2010/08/25	Deciphered Date	2012/08/25

THIS SHEET OF ENGINEERING DRAWING IS THE PROPRIETARY PROPERTY OF COMPAL ELECTRONICS, INC. AND CONTAINS CONFIDENTIAL AND TRADE SECRET INFORMATION. THIS SHEET MAY NOT BE TRANSFERED FROM THE CUSTODY OF THE COMPETENT DIVISION OF R&D DEPARTMENT EXCEPT AS AUTHORIZED BY COMPAL ELECTRONICS, INC. NEITHER THIS SHEET NOR THE INFORMATION IT CONTAINS MAY BE USED BY OR DISCLOSED TO ANY THIRD PARTY WITHOUT PRIOR WRITTEN CONSENT OF COMPAL ELECTRONICS, INC.

Compal Electronics, Inc.

Title: PCH (4/9) LVDS,CRT,DP,HDMI

Size: Custom | Document Number: LA-8671P_SDV | Rev: 1.0

Date: Thursday, October 04, 2012 | Sheet 15 of 50

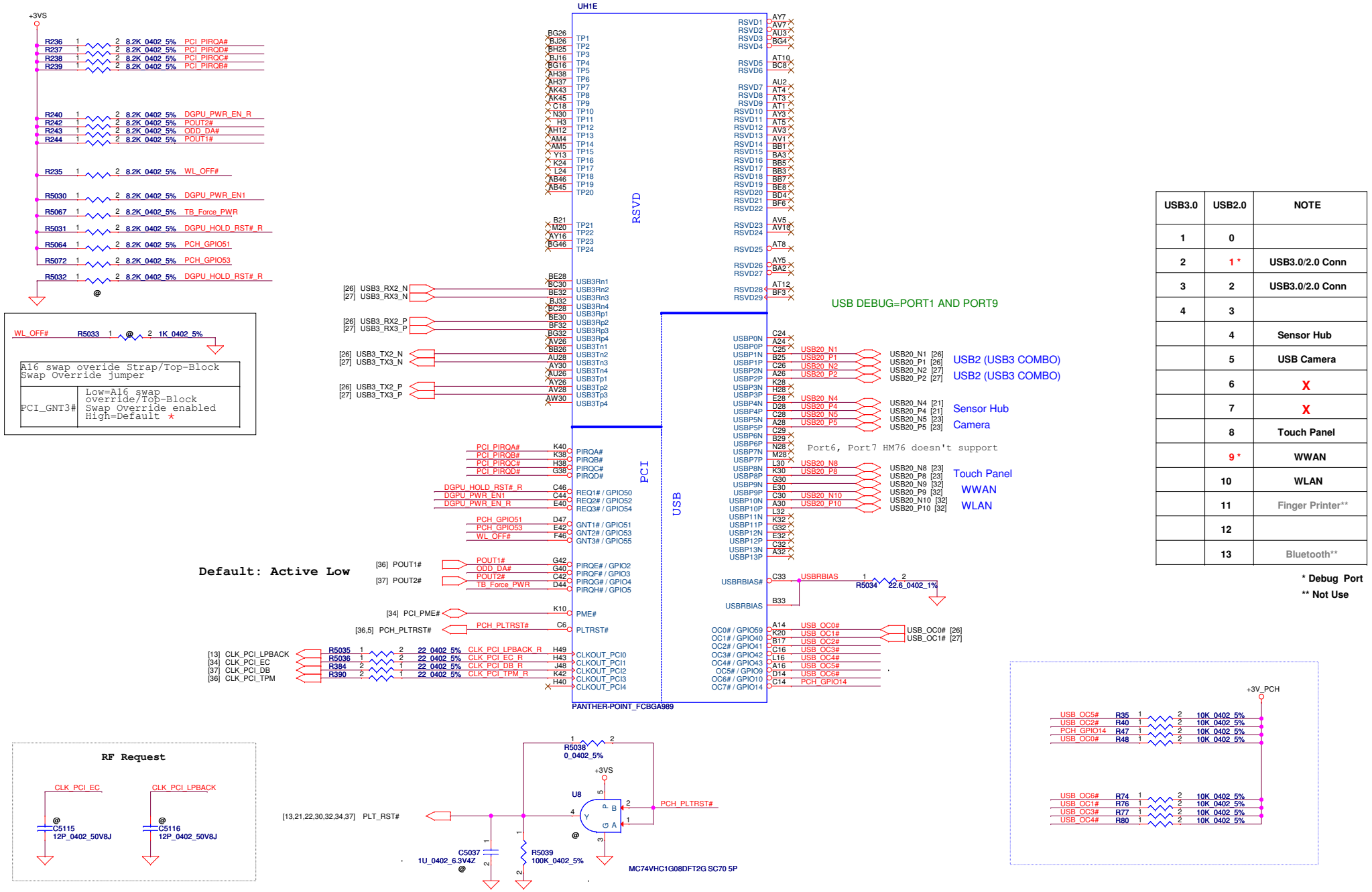

USB3.0	USB2.0	NOTE
1	0	
2	1 *	USB3.0/2.0 Conn
3	2	USB3.0/2.0 Conn
4	3	
	4	Sensor Hub
	5	USB Camera
	6	X
	7	X
	8	Touch Panel
	9 *	WWAN
	10	WLAN
	11	Finger Printer**
	12	
	13	Bluetooth**

* Debug Port

** Not Use

AMY WEN

Security Classification	Compal Secret Data		
Issued Date	2010/08/25	Deciphered Date	2012/08/25

THIS SHEET OF ENGINEERING DRAWING IS THE PROPRIETARY PROPERTY OF COMPAL ELECTRONICS, INC. AND CONTAINS CONFIDENTIAL AND TRADE SECRET INFORMATION. THIS SHEET MAY NOT BE TRANSFERED FROM THE CUSTODY OF THE COMPETENT DIVISION OF R&D DEPARTMENT EXCEPT AS AUTHORIZED BY COMPAL ELECTRONICS, INC. NEITHER THIS SHEET NOR THE INFORMATION IT CONTAINS MAY BE USED BY OR DISCLOSED TO ANY THIRD PARTY WITHOUT PRIOR WRITTEN CONSENT OF COMPAL ELECTRONICS, INC.

Compal Electronics, Inc.

Title: PCH (5/9) PCI, USB

Size: Custom | Document Number: LA-8671P_SDV | Rev: 1.0

Date: Thursday, October 04, 2012 | Sheet 16 of 50

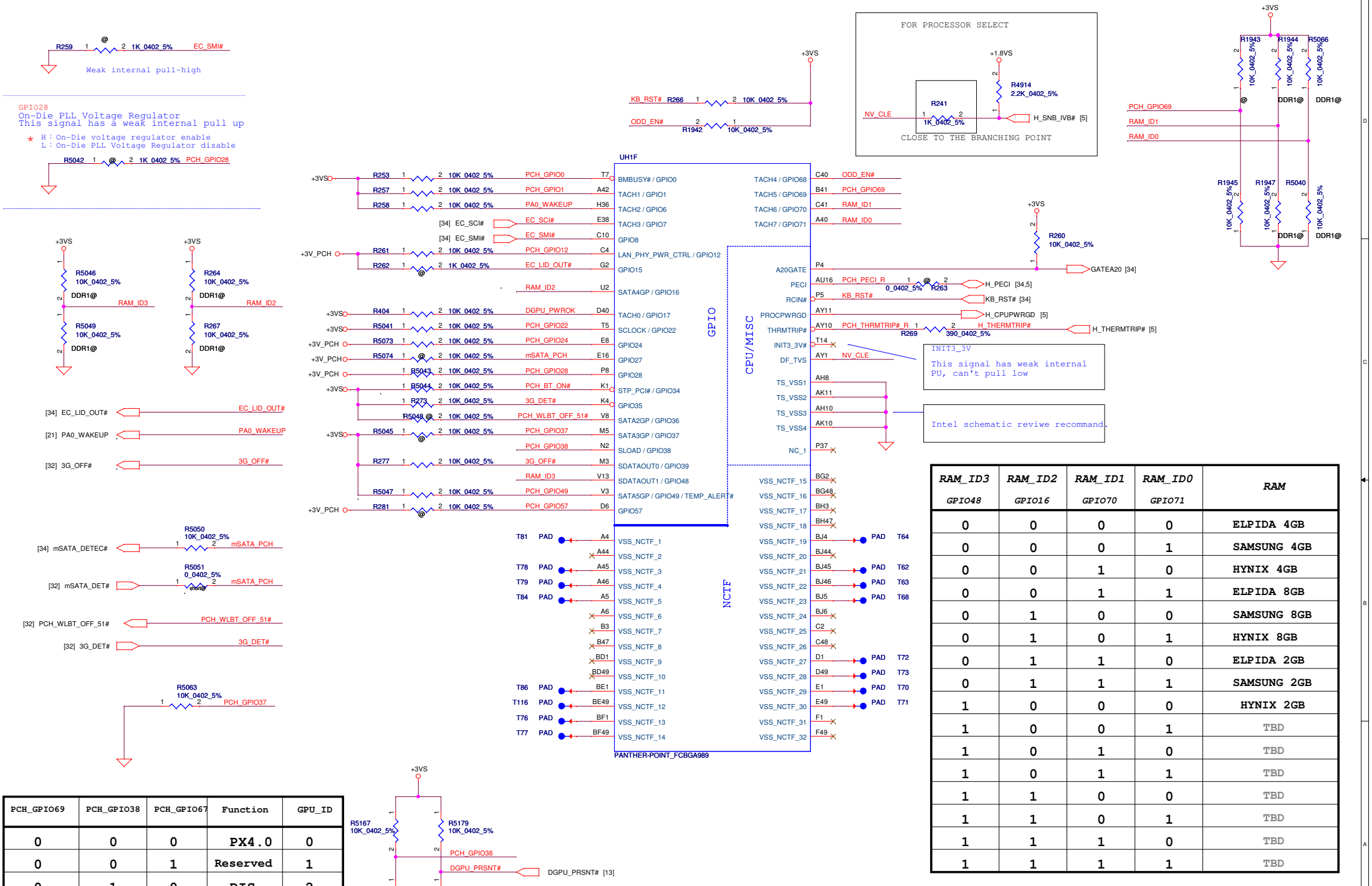

RAM_ID3 GPIO48	RAM_ID2 GPIO16	RAM_ID1 GPIO70	RAM_ID0 GPIO71	RAM
0	0	0	0	ELPIDA 4GB
0	0	0	1	SAMSUNG 4GB
0	0	1	0	HYNIX 4GB
0	0	1	1	ELPIDA 8GB
0	1	0	0	SAMSUNG 8GB
0	1	0	1	HYNIX 8GB
0	1	1	0	ELPIDA 2GB
0	1	1	1	SAMSUNG 2GB
1	0	0	0	HYNIX 2GB
1	0	0	1	TBD
1	0	1	0	TBD
1	0	1	1	TBD
1	1	0	0	TBD
1	1	0	1	TBD
1	1	1	0	TBD
1	1	1	1	TBD

PCH_GPIO69	PCH_GPIO38	PCH_GPIO67	Function	GPU_ID
0	0	0	PX4.0	0
0	0	1	Reserved	1
0	1	0	DIS	2
0	1	1	UMA	3

AMY WEN

Security Classification	Compal Secret Data		
Issued Date	2010/08/25	Deciphered Date	2012/08/25

THIS SHEET OF ENGINEERING DRAWING IS THE PROPRIETARY PROPERTY OF COMPAL ELECTRONICS, INC. AND CONTAINS CONFIDENTIAL AND TRADE SECRET INFORMATION. THIS SHEET MAY NOT BE TRANSFERED FROM THE CUSTODY OF THE COMPETENT DIVISION OF R&D DEPARTMENT EXCEPT AS AUTHORIZED BY COMPAL ELECTRONICS, INC. NEITHER THIS SHEET NOR THE INFORMATION IT CONTAINS MAY BE USED BY OR DISCLOSED TO ANY THIRD PARTY WITHOUT PRIOR WRITTEN CONSENT OF COMPAL ELECTRONICS, INC.

Compal Electronics, Inc.

Title: PCH (6/9) GPIO, CPU, MISC

Size: Custom | Document Number: LA-8671P_SDV | Rev: 1.0

Date: Thursday, October 04, 2012 | Sheet 17 of 50

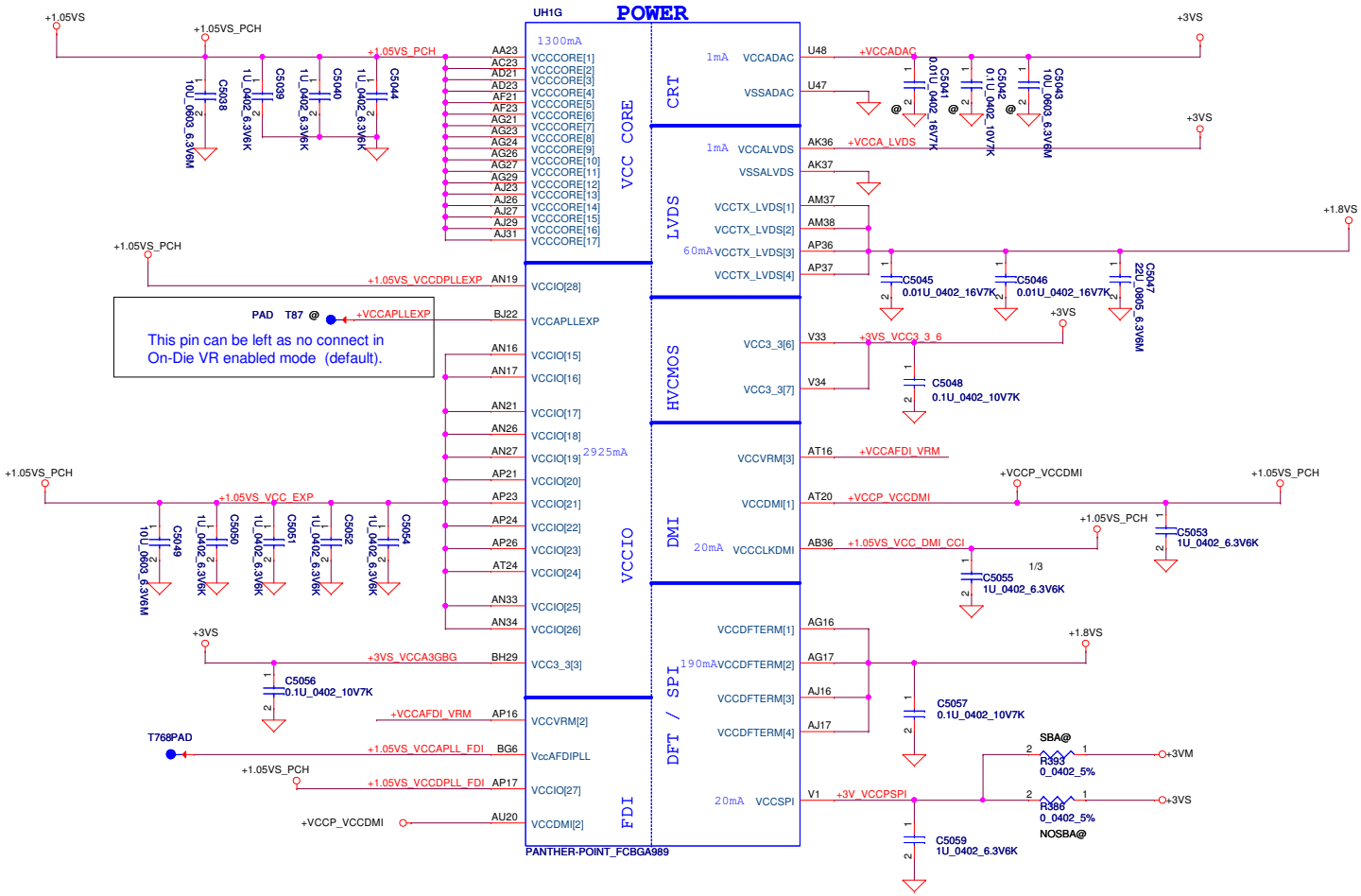

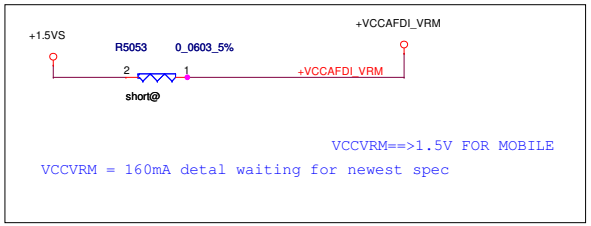

PCH Power Rail Table

Voltage Rail	Voltage	S0 Iccmax Current (A)
V_PROC_IO	1.05	0.001
V5REF	5	0.001
V5REF_Sus	5	0.001
Vcc3_3	3.3	0.266
VccADAC	3.3	0.001
VccADPLLA	1.05	0.08
VccADPLLB	1.05	0.08
VccCore	1.05	1.3
VccDMI	1.05	0.042
VccIO	1.05	2.925
VccASW	1.05	1.01
VccSPI	3.3	0.02
VccDSW	3.3	0.003
VccpNAND	1.8	0.19
VccRTC	3.3	6 uA
VccSus3_3	3.3	0.119
VccSusHDA	3.3 / 1.5	0.01
VccVRM	1.8 / 1.5	0.16
VccCLKDMI	1.05	0.02
VccSSC	1.05	0.095
VccDIFFCLKN	1.05	0.055
VccALVDS	3.3	0.001
VccTX_LVDS	1.8	0.06

AMY WEN

Security Classification	Compal Secret Data		
Issued Date	2010/08/25	Deciphered Date	2012/08/25

THIS SHEET OF ENGINEERING DRAWING IS THE PROPRIETARY PROPERTY OF COMPAL ELECTRONICS, INC. AND CONTAINS CONFIDENTIAL AND TRADE SECRET INFORMATION. THIS SHEET MAY NOT BE TRANSFERED FROM THE CUSTODY OF THE COMPETENT DIVISION OF R&D DEPARTMENT EXCEPT AS AUTHORIZED BY COMPAL ELECTRONICS, INC. NEITHER THIS SHEET NOR THE INFORMATION IT CONTAINS MAY BE USED BY OR DISCLOSED TO ANY THIRD PARTY WITHOUT PRIOR WRITTEN CONSENT OF COMPAL ELECTRONICS, INC.

Compal Electronics, Inc.

Title: PCH (7/9) PWR

Size: Custom | Document Number: LA-8671P_SDV | Rev: 1.0

Date: Thursday, October 04, 2012 | Sheet 18 of 50

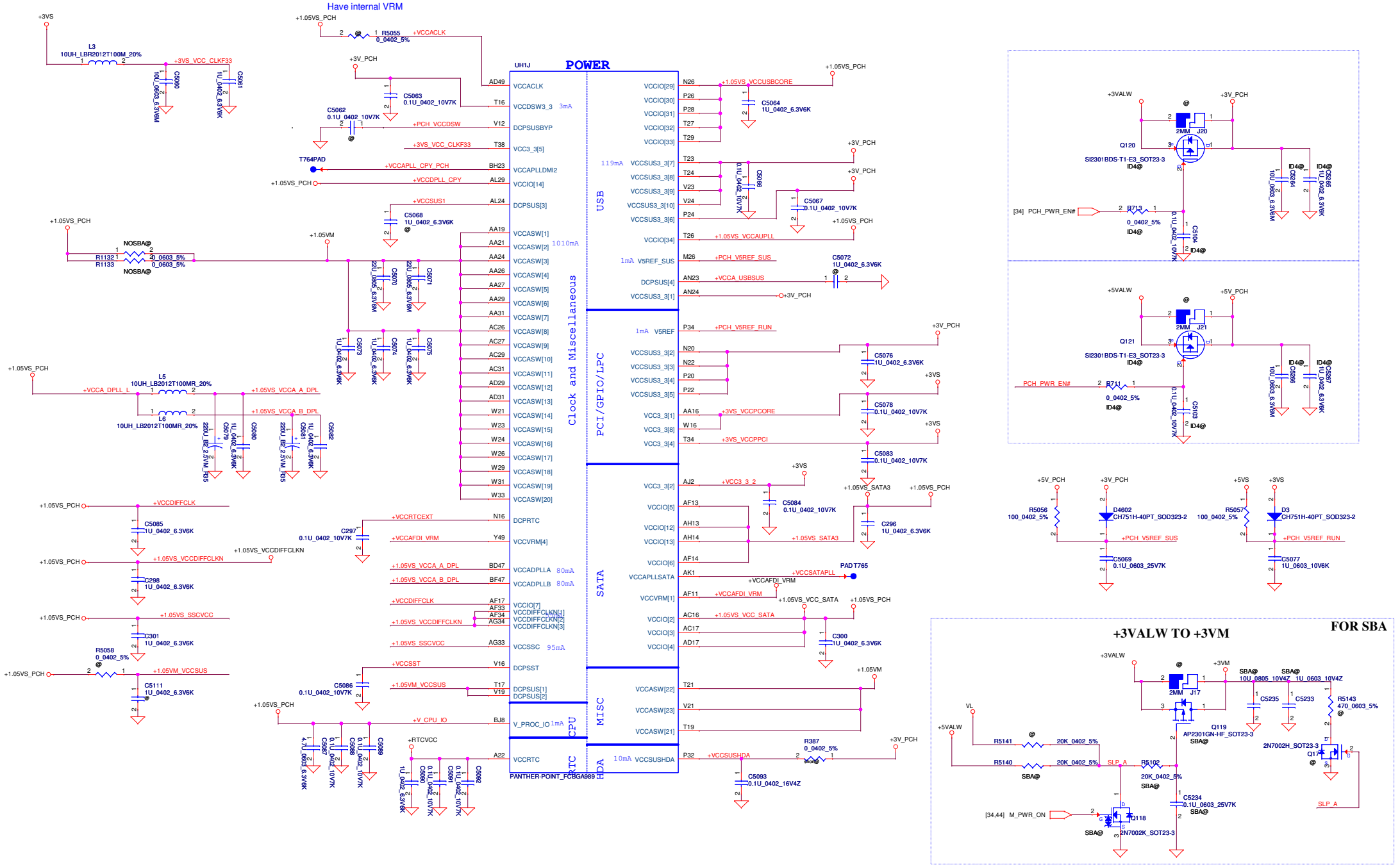

Security Classification	Compal Secret Data		
Issued Date	2010/08/25	Deciphered Date	2012/08/25

THIS SHEET OF ENGINEERING DRAWING IS THE PROPRIETARY PROPERTY OF COMPAL ELECTRONICS, INC. AND CONTAINS CONFIDENTIAL AND TRADE SECRET INFORMATION. THIS SHEET MAY NOT BE TRANSFERED FROM THE CUSTODY OF THE COMPETENT DIVISION OF R&D DEPARTMENT EXCEPT AS AUTHORIZED BY COMPAL ELECTRONICS, INC. NEITHER THIS SHEET NOR THE INFORMATION IT CONTAINS MAY BE USED BY OR DISCLOSED TO ANY THIRD PARTY WITHOUT PRIOR WRITTEN CONSENT OF COMPAL ELECTRONICS, INC.

Compal Electronics, Inc.

Title: PCH (8/9) PWR

Size: Custom | Document Number: LA-8671P_SDV | Rev: 1.0

Date: Thursday, October 04, 2012 | Sheet 19 of 50

AMY WEN

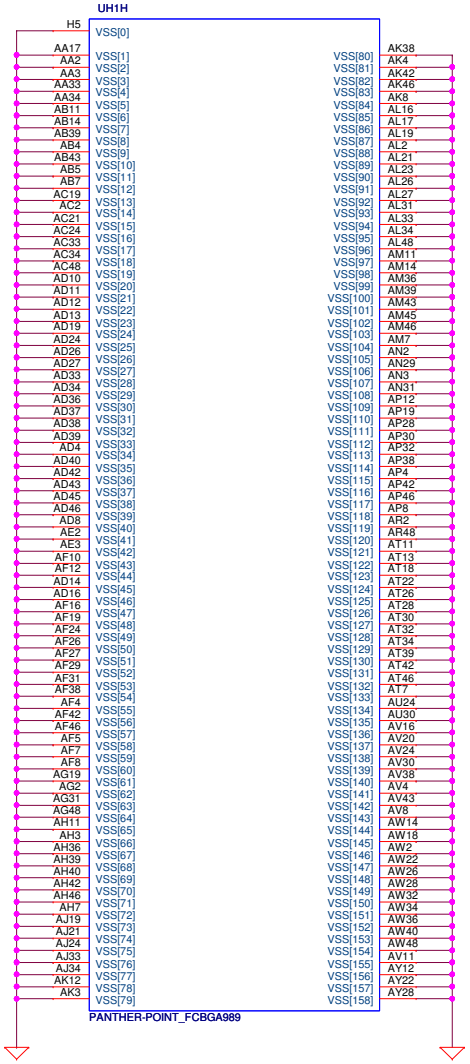

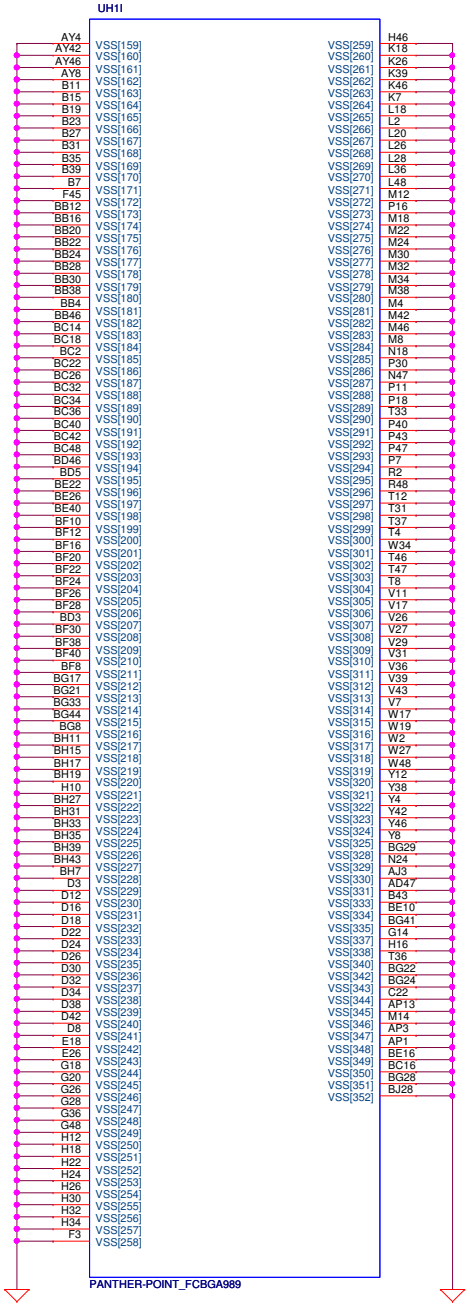

AMY WEN

Security Classification	Compal Secret Data		
Issued Date	2010/08/25	Deciphered Date	2012/08/25

THIS SHEET OF ENGINEERING DRAWING IS THE PROPRIETARY PROPERTY OF COMPAL ELECTRONICS, INC. AND CONTAINS CONFIDENTIAL AND TRADE SECRET INFORMATION. THIS SHEET MAY NOT BE TRANSFERED FROM THE CUSTODY OF THE COMPETENT DIVISION OF R&D DEPARTMENT EXCEPT AS AUTHORIZED BY COMPAL ELECTRONICS, INC. NEITHER THIS SHEET NOR THE INFORMATION IT CONTAINS MAY BE USED BY OR DISCLOSED TO ANY THIRD PARTY WITHOUT PRIOR WRITTEN CONSENT OF COMPAL ELECTRONICS, INC.

Compal Electronics, Inc.

Title: PCH (9/9) VSS

Size: Custom | Document Number: LA-8671P_SDV | Rev: 1.0

Date: Thursday, October 04, 2012 | Sheet 20 of 50

Accelerometer + eCompass

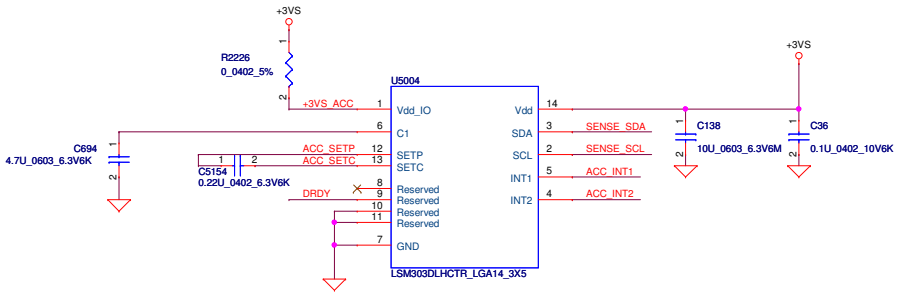

Gyro

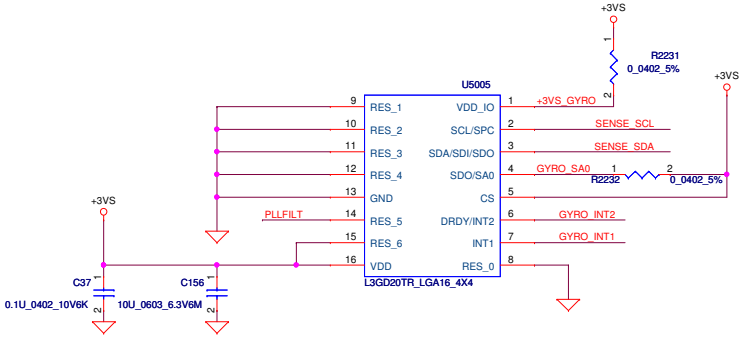

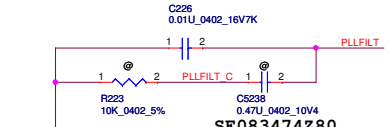

AMY WEN

SE083474Z80

Sensor Hub

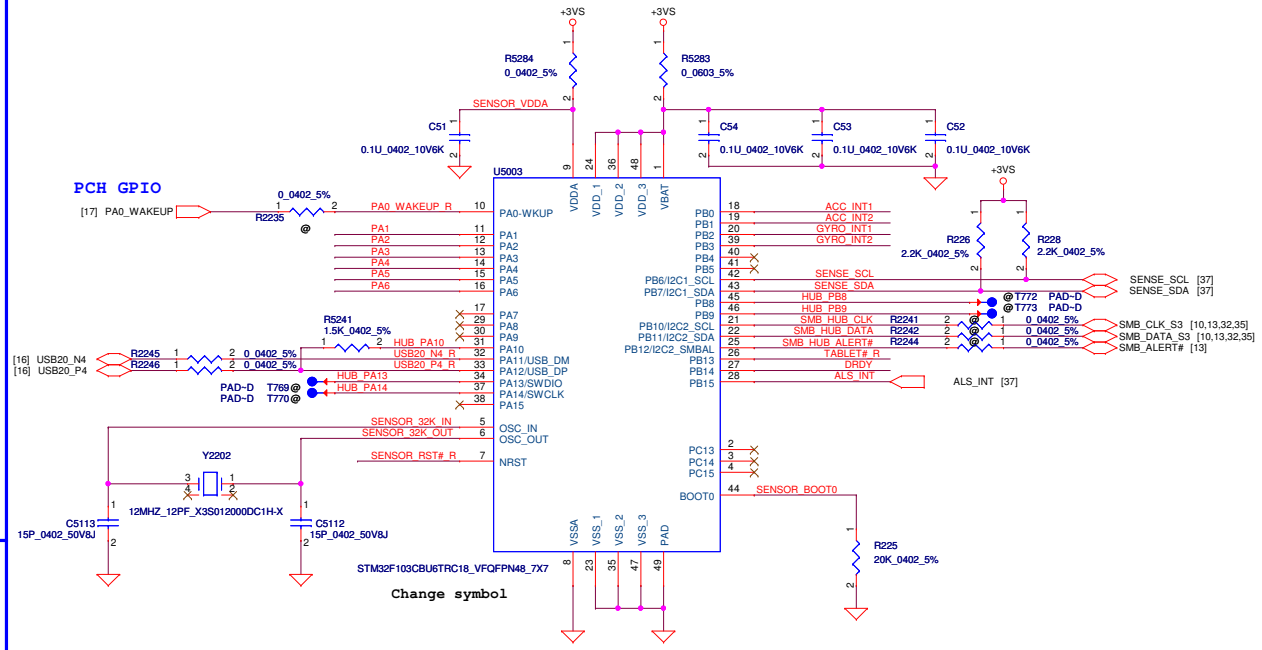

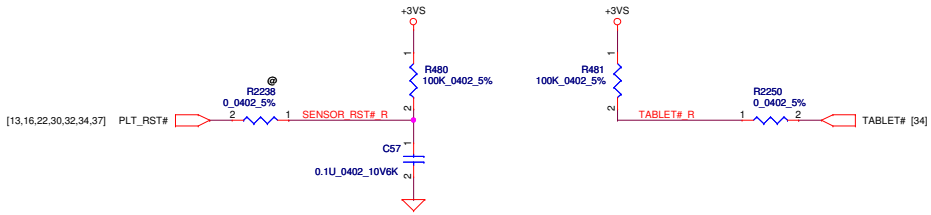

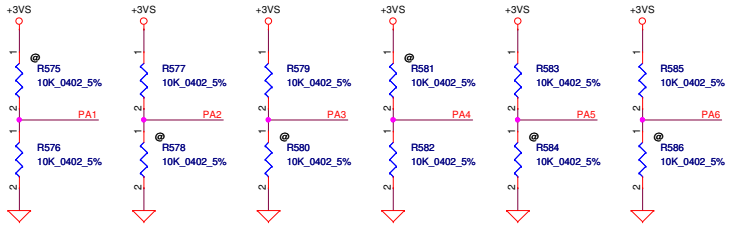

Security Classification	Compal Secret Data		
Issued Date	2010/08/25	Deciphered Date	2012/08/25

THIS SHEET OF ENGINEERING DRAWING IS THE PROPRIETARY PROPERTY OF COMPAL ELECTRONICS, INC. AND CONTAINS CONFIDENTIAL AND TRADE SECRET INFORMATION. THIS SHEET MAY NOT BE TRANSFERED FROM THE CUSTODY OF THE COMPETENT DIVISION OF R&D DEPARTMENT EXCEPT AS AUTHORIZED BY COMPAL ELECTRONICS, INC. NEITHER THIS SHEET NOR THE INFORMATION IT CONTAINS MAY BE USED BY OR DISCLOSED TO ANY THIRD PARTY WITHOUT PRIOR WRITTEN CONSENT OF COMPAL ELECTRONICS, INC.

Compal Electronics, Inc.

Title: Sensor Fusion

Size: Custom | Document Number: LA-8671P_SDV | Rev: 1.0

Date: Thursday, October 04, 2012 | Sheet 21 of 50

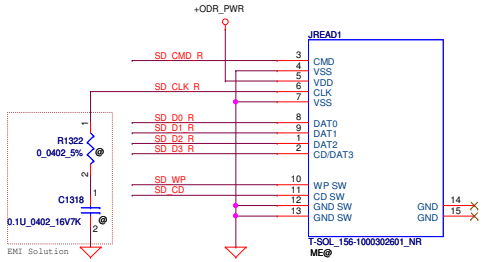

	SD_CD	SD_WP
CARD UNINSERTION	Close(Low)	Close(Low)
CARD HALF INSERTION	Close(Low)	Open(High)
CARD INSERTION	Open(High)	Close(Low)

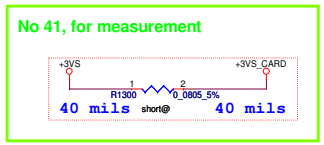

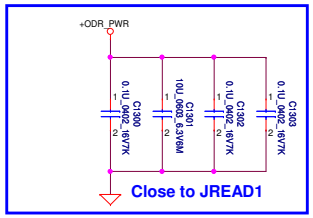

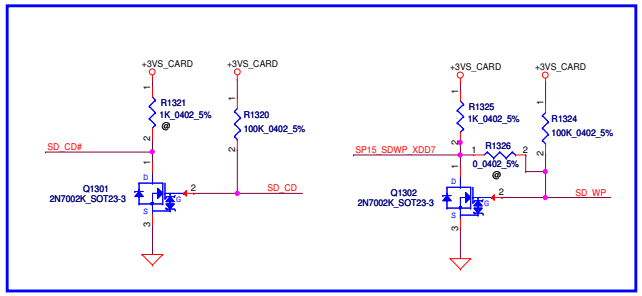

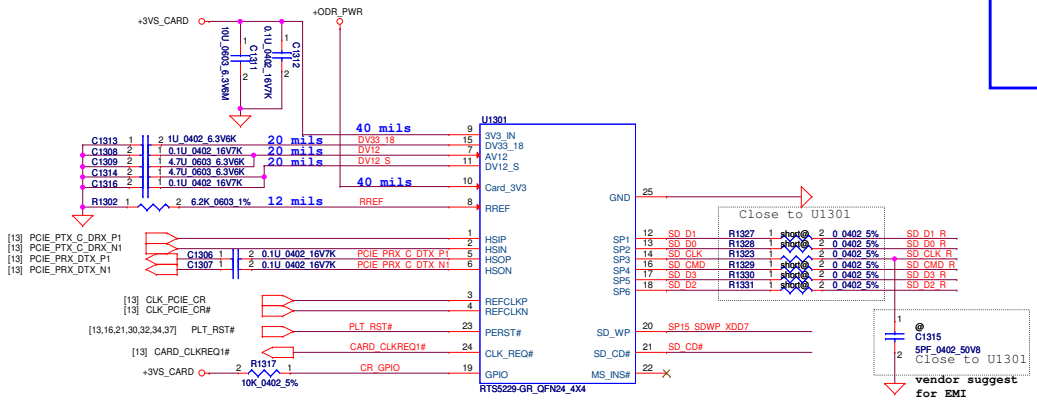

AMY WEN

Security Classification	Compal Secret Data		
Issued Date	2011/05/16	Deciphered Date	2013/05/16

THIS SHEET OF ENGINEERING DRAWING IS THE PROPRIETARY PROPERTY OF COMPAL ELECTRONICS, INC. AND CONTAINS CONFIDENTIAL AND TRADE SECRET INFORMATION. THIS SHEET MAY NOT BE TRANSFERED FROM THE CUSTODY OF THE COMPETENT DIVISION OF R&D DEPARTMENT EXCEPT AS AUTHORIZED BY COMPAL ELECTRONICS, INC. NEITHER THIS SHEET NOR THE INFORMATION IT CONTAINS MAY BE USED BY OR DISCLOSED TO ANY THIRD PARTY WITHOUT PRIOR WRITTEN CONSENT OF COMPAL ELECTRONICS, INC.

Compal Electronics, Inc.

Title: Card Reader

Size: C | Document Number: LA-8671P_SDV | Rev: 1.0

Date: Thursday, October 04, 2012 | Sheet 22 of 50

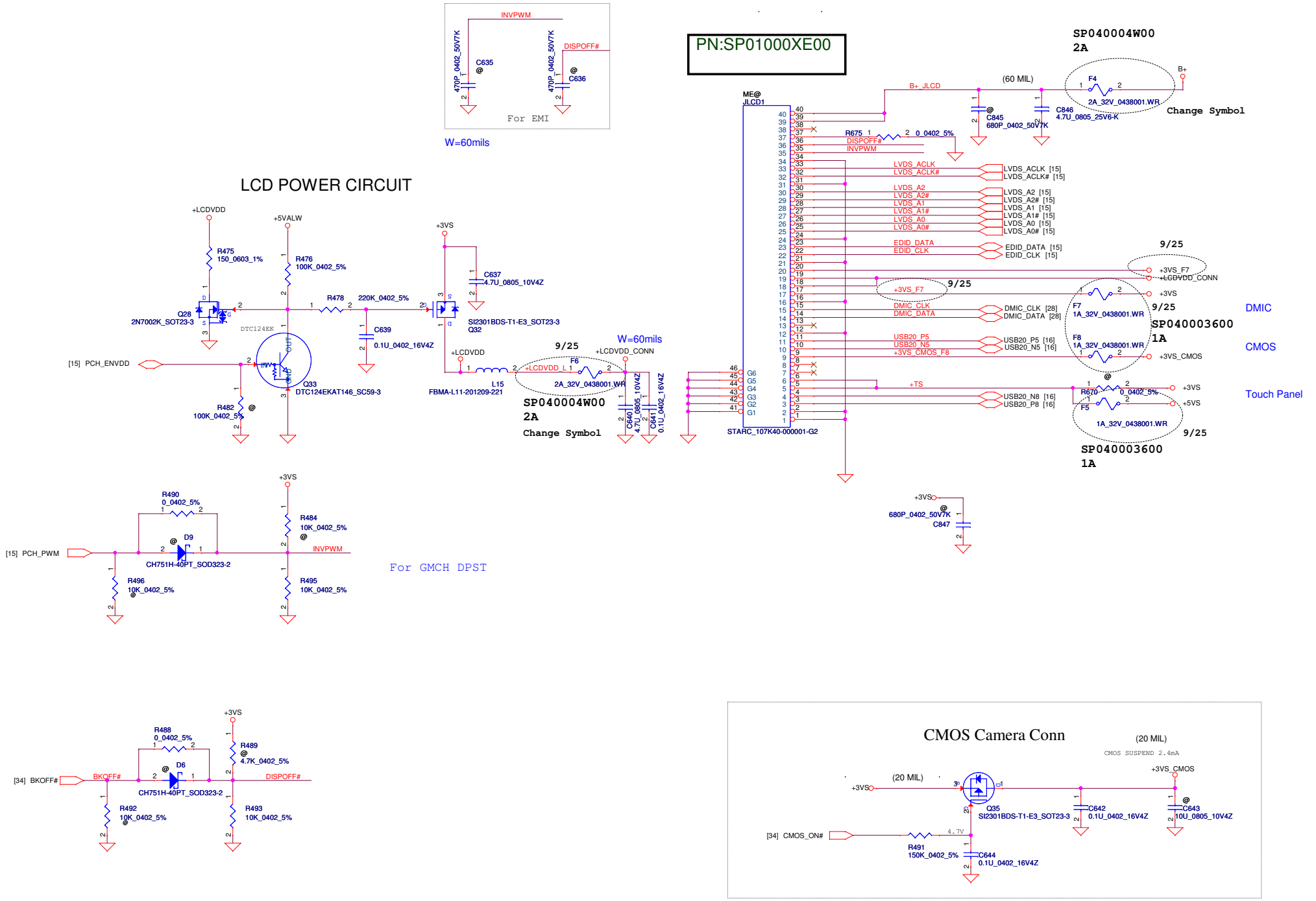

AMY WEN

Security Classification	Compal Secret Data		
Issued Date	2010/08/25	Deciphered Date	2012/08/25

THIS SHEET OF ENGINEERING DRAWING IS THE PROPRIETARY PROPERTY OF COMPAL ELECTRONICS, INC. AND CONTAINS CONFIDENTIAL AND TRADE SECRET INFORMATION. THIS SHEET MAY NOT BE TRANSFERED FROM THE CUSTODY OF THE COMPETENT DIVISION OF R&D DEPARTMENT EXCEPT AS AUTHORIZED BY COMPAL ELECTRONICS, INC. NEITHER THIS SHEET NOR THE INFORMATION IT CONTAINS MAY BE USED BY OR DISCLOSED TO ANY THIRD PARTY WITHOUT PRIOR WRITTEN CONSENT OF COMPAL ELECTRONICS, INC.

Compal Electronics, Inc.

Title: LVDS/CAMERA

Size: Custom | Document Number: LA-8671P_SDV | Rev: 1A

Date: Thursday, October 04, 2012 | Sheet 23 of 50

PN:SM070001S00x 4

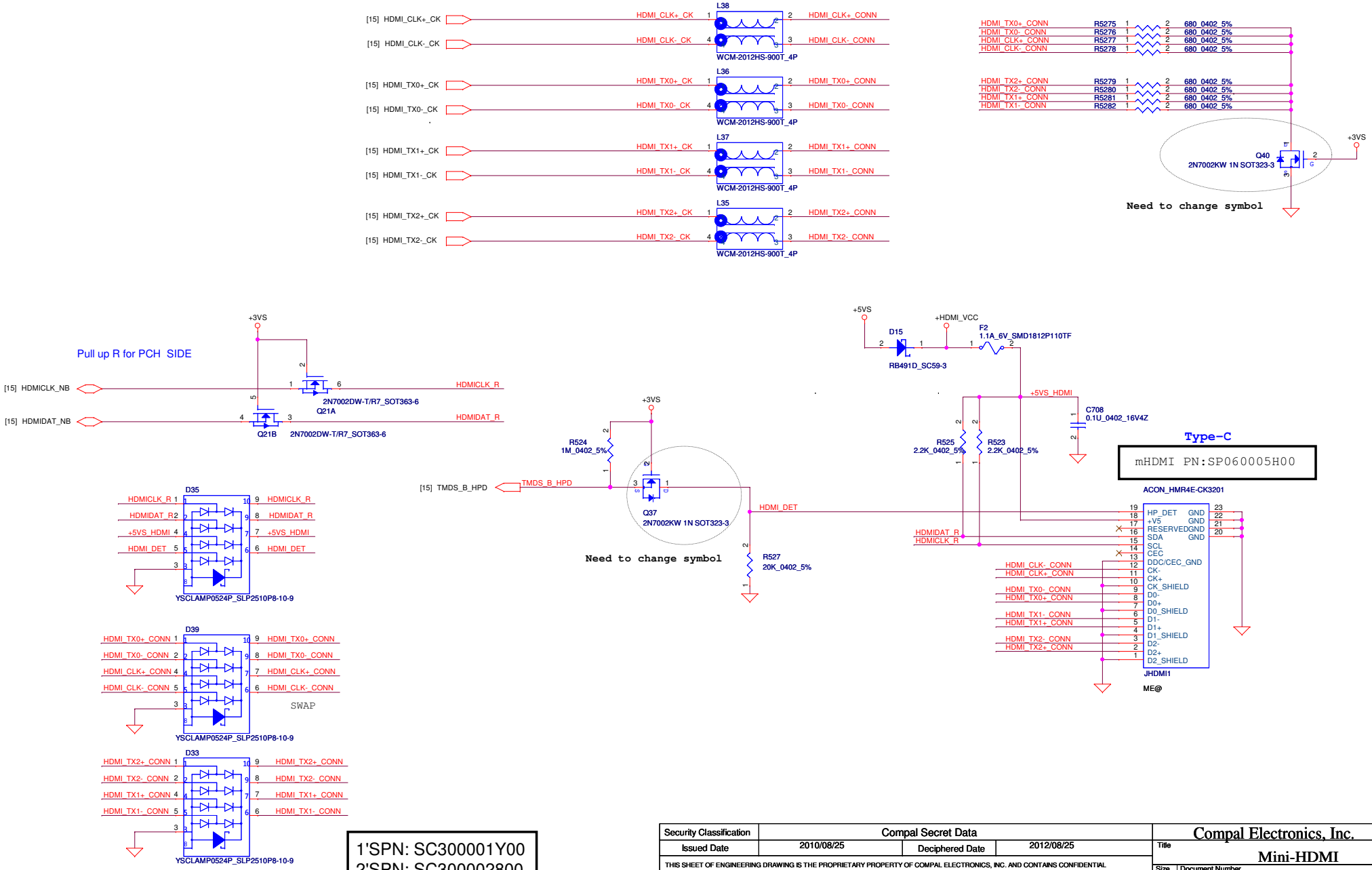

1'SPN: SC300001Y00
2'SPN: SC300002800

Security Classification	Compal Secret Data		
Issued Date	2010/08/25	Deciphered Date	2012/08/25

THIS SHEET OF ENGINEERING DRAWING IS THE PROPRIETARY PROPERTY OF COMPAL ELECTRONICS, INC. AND CONTAINS CONFIDENTIAL AND TRADE SECRET INFORMATION. THIS SHEET MAY NOT BE TRANSFERED FROM THE CUSTODY OF THE COMPETENT DIVISION OF R&D DEPARTMENT EXCEPT AS AUTHORIZED BY COMPAL ELECTRONICS, INC. NEITHER THIS SHEET NOR THE INFORMATION IT CONTAINS MAY BE USED BY OR DISCLOSED TO ANY THIRD PARTY WITHOUT PRIOR WRITTEN CONSENT OF COMPAL ELECTRONICS, INC.

Compal Electronics, Inc.

Title: Mini-HDMI

Size: Custom | Document Number: LA-8671P_SDV | Rev: 1.0

Date: Thursday, October 04, 2012 | Sheet 24 of 50

AMY WEN

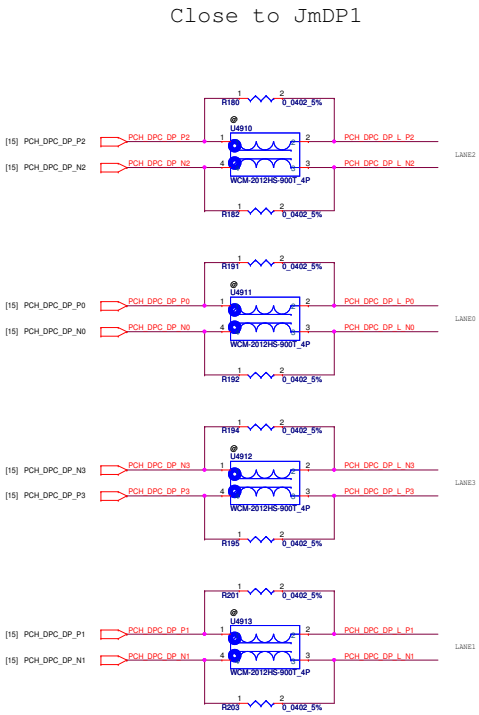

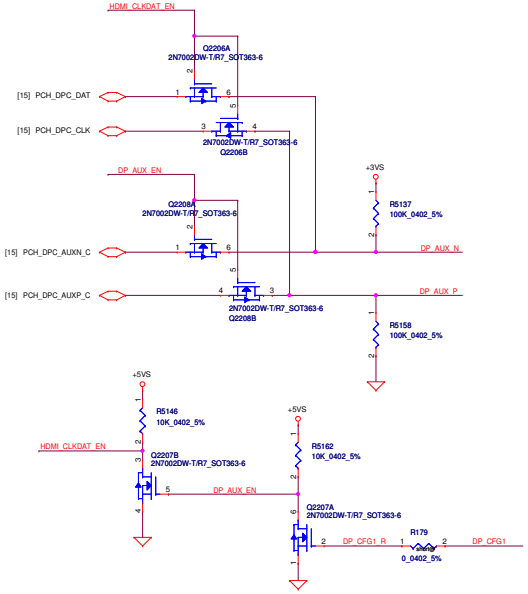

TBT, HDMI, DP mode table

HPD	CFG1	CFG2	LSRX	Mode
1	0	0	X	DP
1	1	X	X	HDMI
~~0~~	~~0~~	~~1~~	~~1~~	~~TBT~~

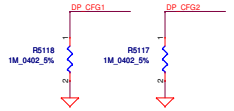

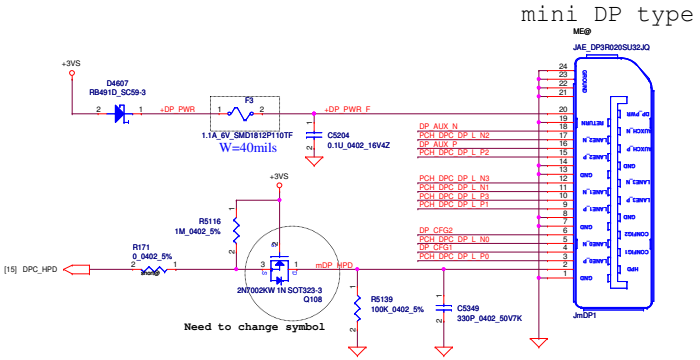

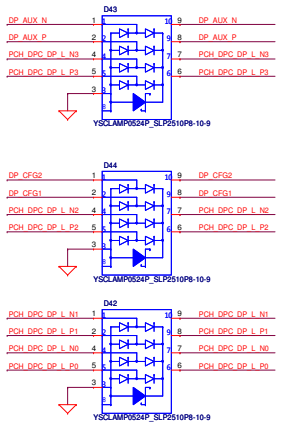

AMY WEN

Security Classification	Compal Secret Data		
Issued Date	2010/08/25	Deciphered Date	2012/08/25

THIS SHEET OF ENGINEERING DRAWING IS THE PROPRIETARY PROPERTY OF COMPAL ELECTRONICS, INC. AND CONTAINS CONFIDENTIAL AND TRADE SECRET INFORMATION. THIS SHEET MAY NOT BE TRANSFERED FROM THE CUSTODY OF THE COMPETENT DIVISION OF R&D DEPARTMENT EXCEPT AS AUTHORIZED BY COMPAL ELECTRONICS, INC. NEITHER THIS SHEET NOR THE INFORMATION IT CONTAINS MAY BE USED BY OR DISCLOSED TO ANY THIRD PARTY WITHOUT PRIOR WRITTEN CONSENT OF COMPAL ELECTRONICS, INC.

Compal Electronics, Inc.

Title: mDP Connector

Size: Custom | Document Number: LA-8671P_SDV | Rev: 1.0

Date: Thursday, October 04, 2012 | Sheet 25 of 50

JUSB1USB3.0/USB2.0

1'SPN: SC300001Y00
2'SPN: SC300002800

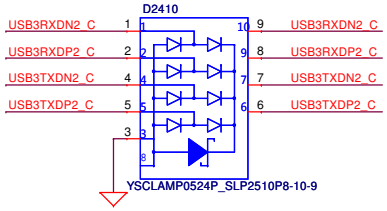

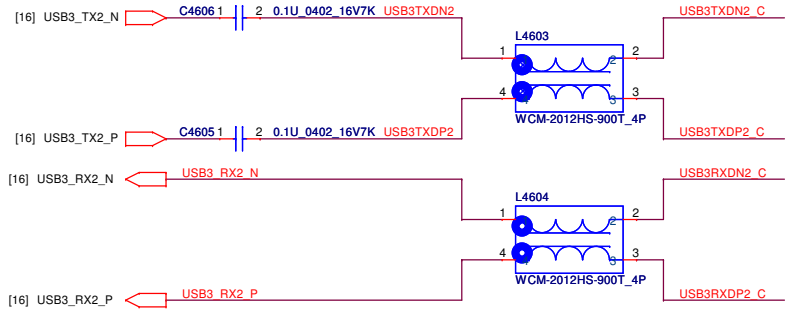

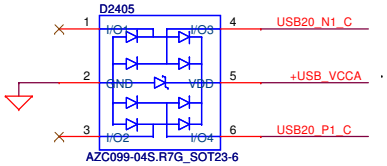

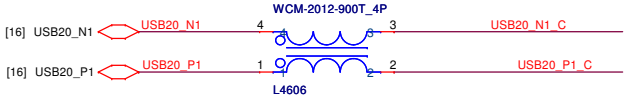

1'S PN: SC300001G00
2'S PN: SC300002E00

DC23300A410

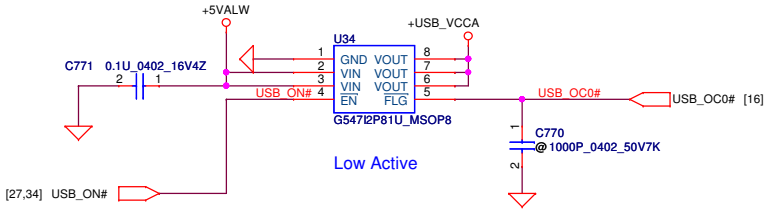

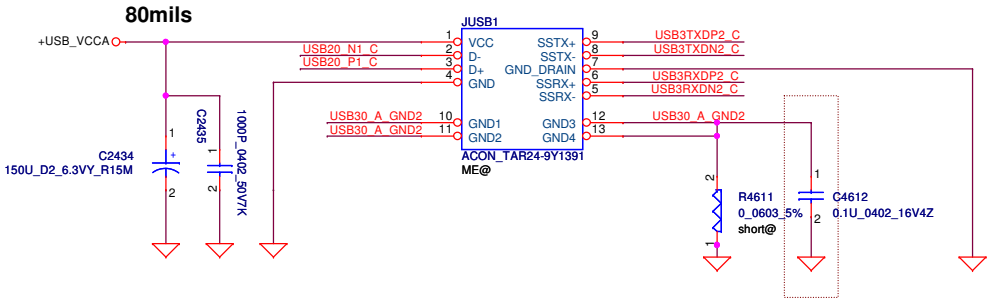

AMY WEN

Security Classification	Compal Secret Data		
Issued Date	2011/05/16	Deciphered Date	2013/05/16

THIS SHEET OF ENGINEERING DRAWING IS THE PROPRIETARY PROPERTY OF COMPAL ELECTRONICS, INC. AND CONTAINS CONFIDENTIAL AND TRADE SECRET INFORMATION. THIS SHEET MAY NOT BE TRANSFERED FROM THE CUSTODY OF THE COMPETENT DIVISION OF R&D DEPARTMENT EXCEPT AS AUTHORIZED BY COMPAL ELECTRONICS, INC. NEITHER THIS SHEET NOR THE INFORMATION IT CONTAINS MAY BE USED BY OR DISCLOSED TO ANY THIRD PARTY WITHOUT PRIOR WRITTEN CONSENT OF COMPAL ELECTRONICS, INC.

Compal Electronics, Inc.

Title: USB3.0/2.0 CONN-L

Size: Custom | Document Number: LA-8671P_SDV | Rev: 1.0

Date: Thursday, October 04, 2012 | Sheet 26 of 50

JUSB1USB3.0/USB2.0

1'SPN: SC300001Y00
2'SPN: SC300002800

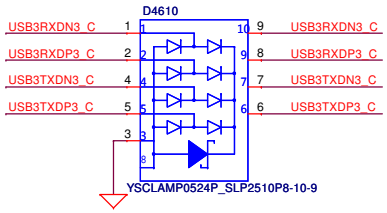

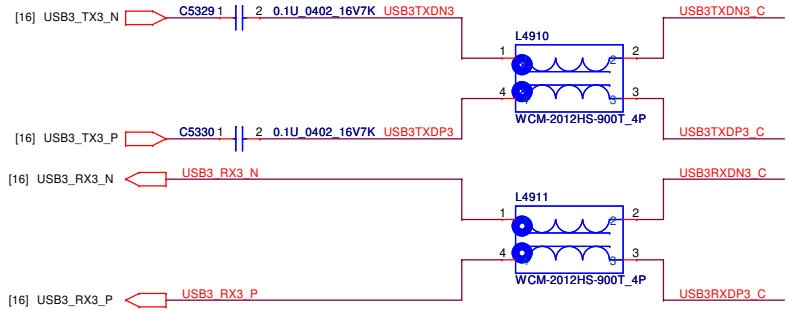

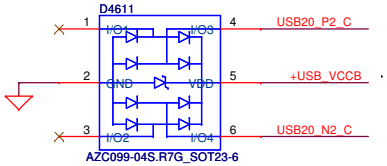

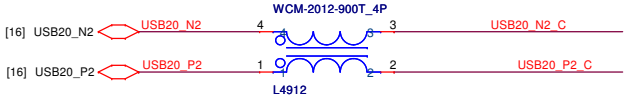

1'S PN: SC300001G00
2'S PN: SC300002E00

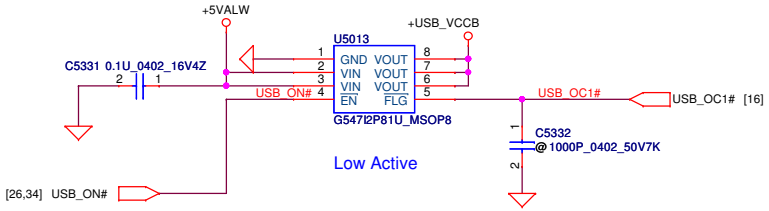

DC23300A410

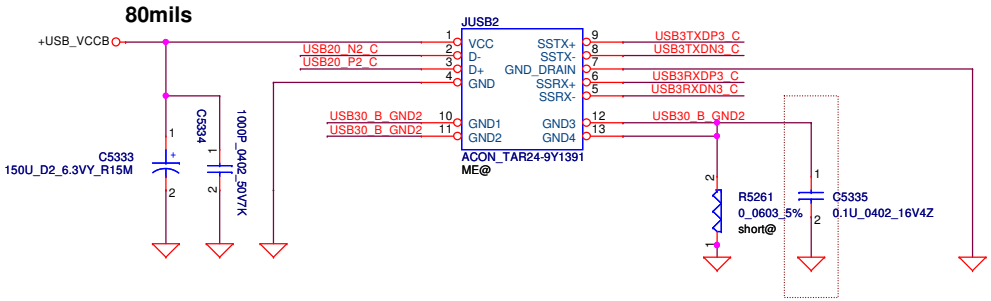

AMY WEN

Security Classification	Compal Secret Data		
Issued Date	2011/05/16	Deciphered Date	2013/05/16

THIS SHEET OF ENGINEERING DRAWING IS THE PROPRIETARY PROPERTY OF COMPAL ELECTRONICS, INC. AND CONTAINS CONFIDENTIAL AND TRADE SECRET INFORMATION. THIS SHEET MAY NOT BE TRANSFERED FROM THE CUSTODY OF THE COMPETENT DIVISION OF R&D DEPARTMENT EXCEPT AS AUTHORIZED BY COMPAL ELECTRONICS, INC. NEITHER THIS SHEET NOR THE INFORMATION IT CONTAINS MAY BE USED BY OR DISCLOSED TO ANY THIRD PARTY WITHOUT PRIOR WRITTEN CONSENT OF COMPAL ELECTRONICS, INC.

Compal Electronics, Inc.

Title: USB3.0/2.0 CONN-R

Size: Custom | Document Number: LA-8671P_SDV | Rev: 1.0

Date: Thursday, October 04, 2012 | Sheet 27 of 50

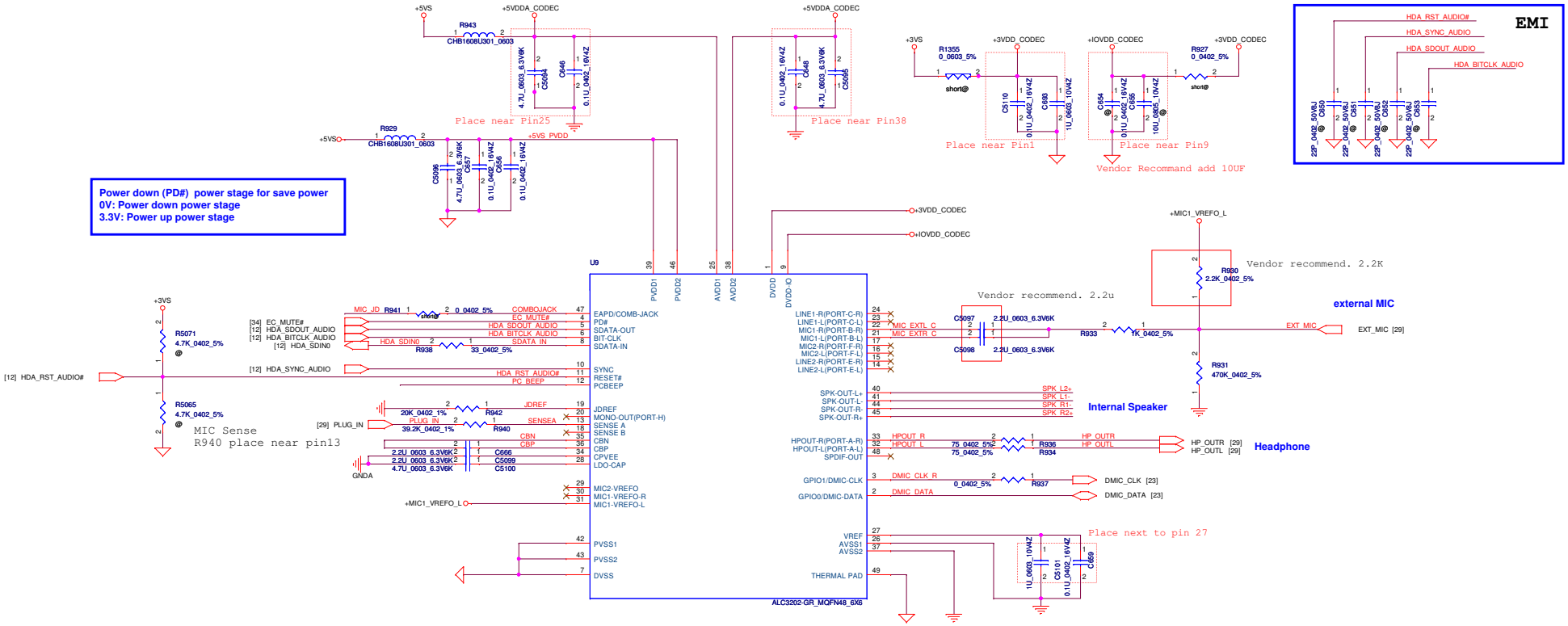

SA000058310
Change symbol

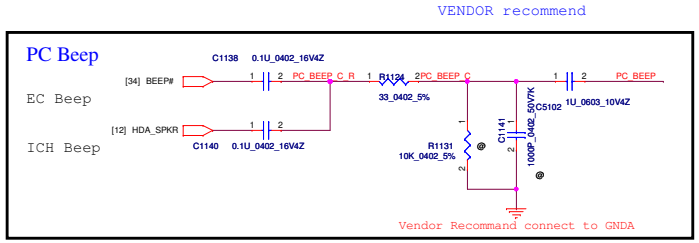

Pin Assignment	Location	Function
SPK-OUT (Pin40/41/44/45)	Internal	Int Speaker
Capless HP-OUT (Pin32/33)	External	Headphone out
MIC1(Pin21/22)	External	Mic in

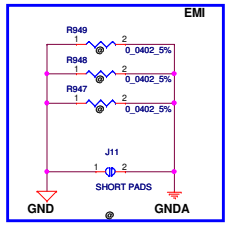

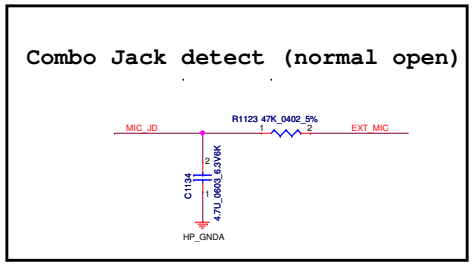

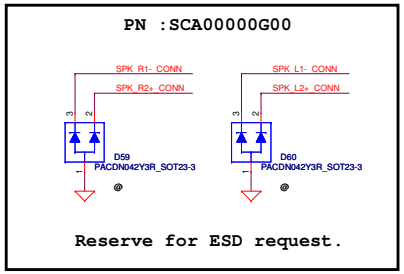

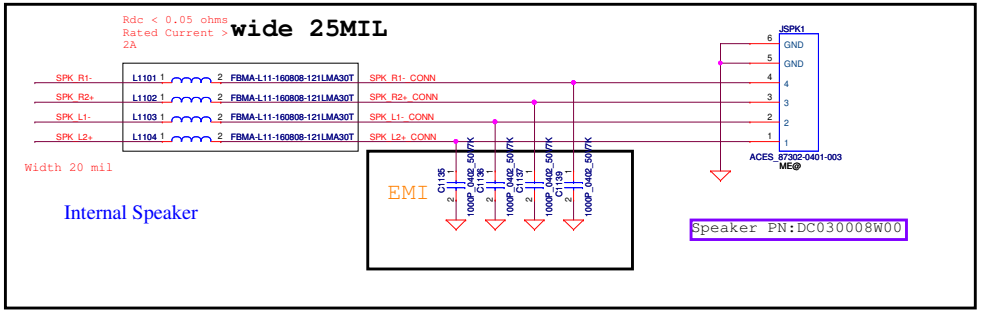

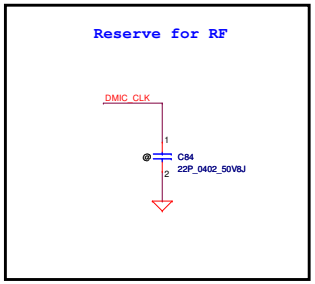

AMY WEN

Security Classification	Compal Secret Data		
Issued Date	2011/05/16	Deciphered Date	2013/05/16

Title: Compal Electronics, Inc.
Audio Codec ALC3202

THIS SHEET OF ENGINEERING DRAWING IS THE PROPRIETARY PROPERTY OF COMPAL ELECTRONICS, INC. AND CONTAINS CONFIDENTIAL AND TRADE SECRET INFORMATION. THIS SHEET MAY NOT BE TRANSFERED FROM THE CUSTODY OF THE COMPETENT DIVISION OF R&D DEPARTMENT EXCEPT AS AUTHORIZED BY COMPAL ELECTRONICS, INC. NEITHER THIS SHEET NOR THE INFORMATION IT CONTAINS MAY BE USED BY OR DISCLOSED TO ANY THIRD PARTY WITHOUT PRIOR WRITTEN CONSENT OF COMPAL ELECTRONICS, INC.

Size: Custom | Document Number: LA-8671P_SDV | Rev: 1.0
Date: Thursday, October 04, 2012 | Sheet 28 of 50

PN:DC230008E00

Choose normal-open type!

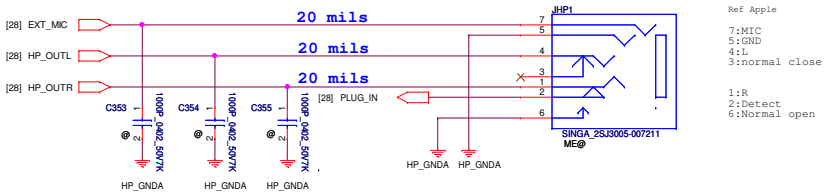

Ref Apple

7:MIC
5:GND
4:L
3:normal close

1:R
2:Detect
6:Normal open

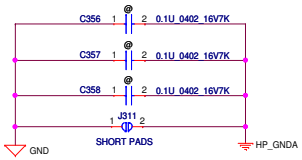

GND

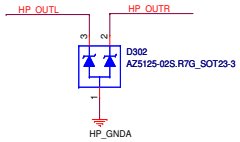

PN: SCA00001I00

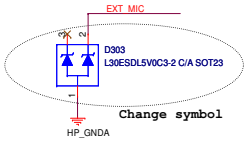

PN: SCA00001L00

AMY WEN

Security Classification	Compal Secret Data			Compal Electronics, Inc.
Issued Date	2011/05/16	Deciphered Date	2013/05/16	Title: Combo Jack
				Size: C; Document Number: LA-8671P_SDV; Rev: 1.0
				Date: Thursday, October 04, 2012; Sheet 29 of 50

THIS SHEET OF ENGINEERING DRAWING IS THE PROPRIETARY PROPERTY OF COMPAL ELECTRONICS, INC. AND CONTAINS CONFIDENTIAL AND TRADE SECRET INFORMATION. THIS SHEET MAY NOT BE TRANSFERED FROM THE CUSTODY OF THE COMPETENT DIVISION OF R&D DEPARTMENT EXCEPT AS AUTHORIZED BY COMPAL ELECTRONICS, INC. NEITHER THIS SHEET NOR THE INFORMATION IT CONTAINS MAY BE USED BY OR DISCLOSED TO ANY THIRD PARTY WITHOUT PRIOR WRITTEN CONSENT OF COMPAL ELECTRONICS, INC.

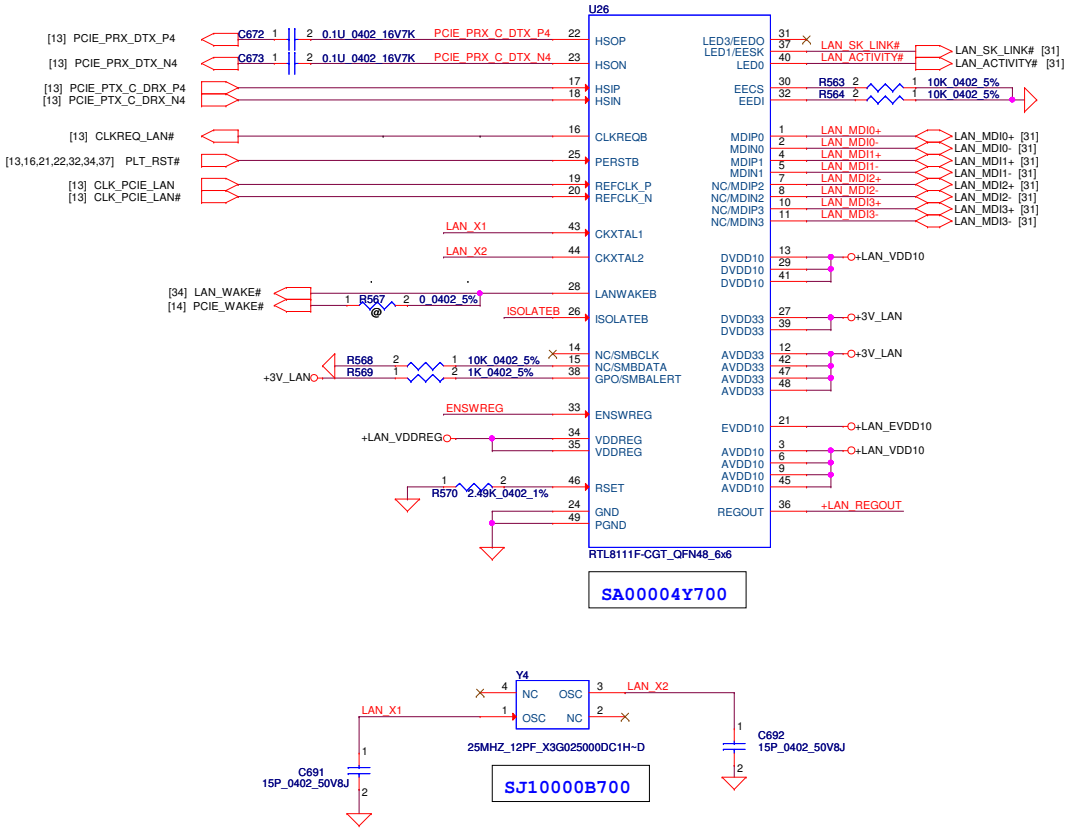

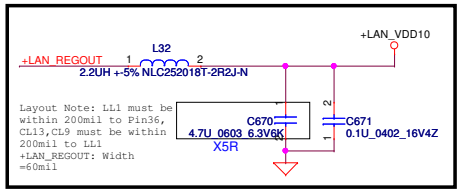

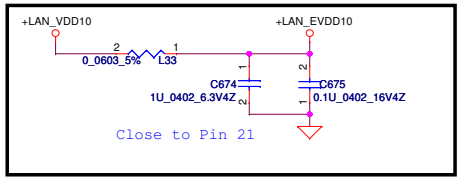

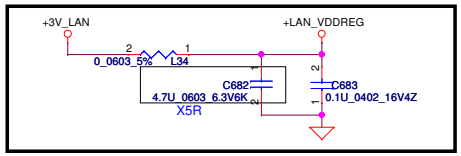

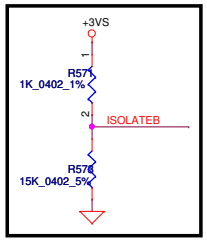

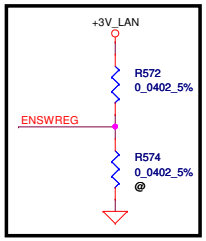

H: Enable internal Regular
L: Disable

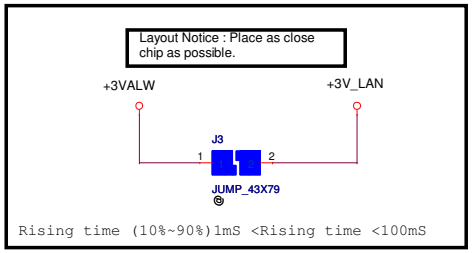

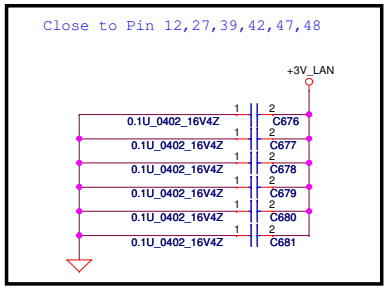

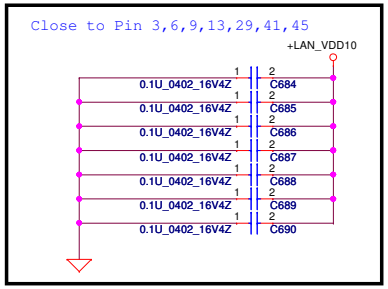

AMY WEN

Security Classification	Compal Secret Data		
Issued Date	2010/08/25	Deciphered Date	2012/08/25

THIS SHEET OF ENGINEERING DRAWING IS THE PROPRIETARY PROPERTY OF COMPAL ELECTRONICS, INC. AND CONTAINS CONFIDENTIAL AND TRADE SECRET INFORMATION. THIS SHEET MAY NOT BE TRANSFERED FROM THE CUSTODY OF THE COMPETENT DIVISION OF R&D DEPARTMENT EXCEPT AS AUTHORIZED BY COMPAL ELECTRONICS, INC. NEITHER THIS SHEET NOR THE INFORMATION IT CONTAINS MAY BE USED BY OR DISCLOSED TO ANY THIRD PARTY WITHOUT PRIOR WRITTEN CONSENT OF COMPAL ELECTRONICS, INC.

Compal Electronics, Inc.

Title: LAN-RTL8111F

Size: Custom | Document Number: LA-8671P_SDV | Rev: 1.0

Date: Thursday, October 04, 2012 | Sheet 30 of 50

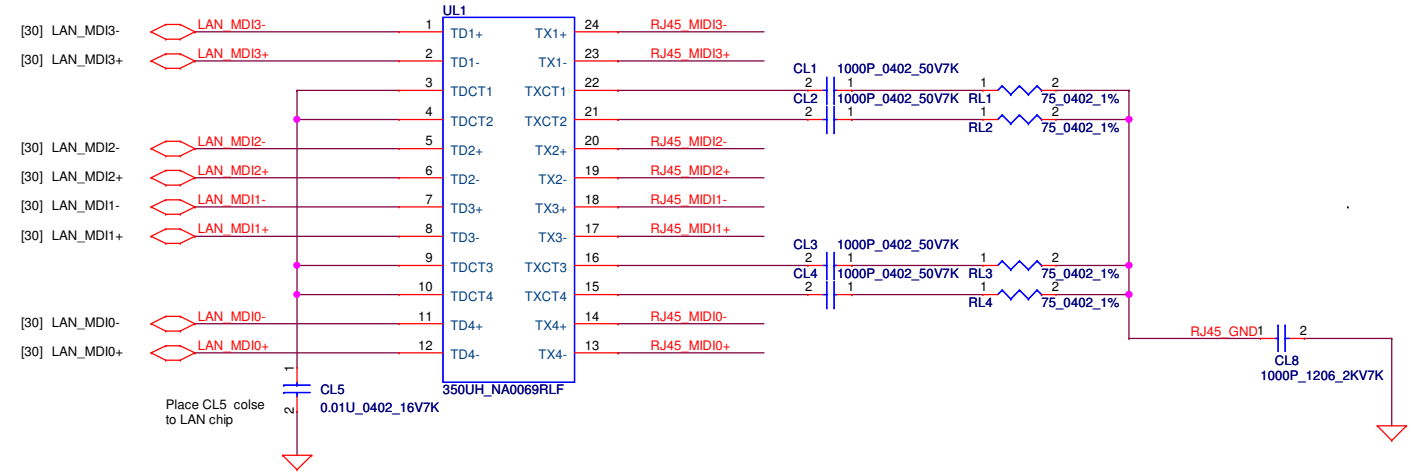

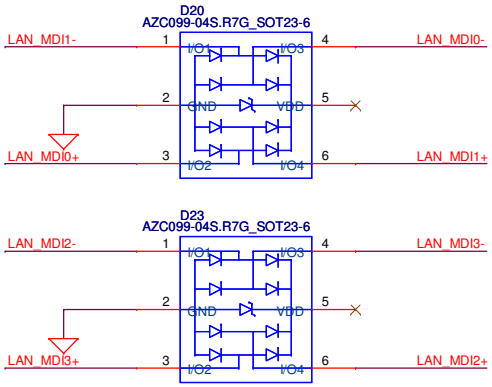

DC234005300
LAN Conn.

RL5,RL7 Vendor recommand 510 ohm

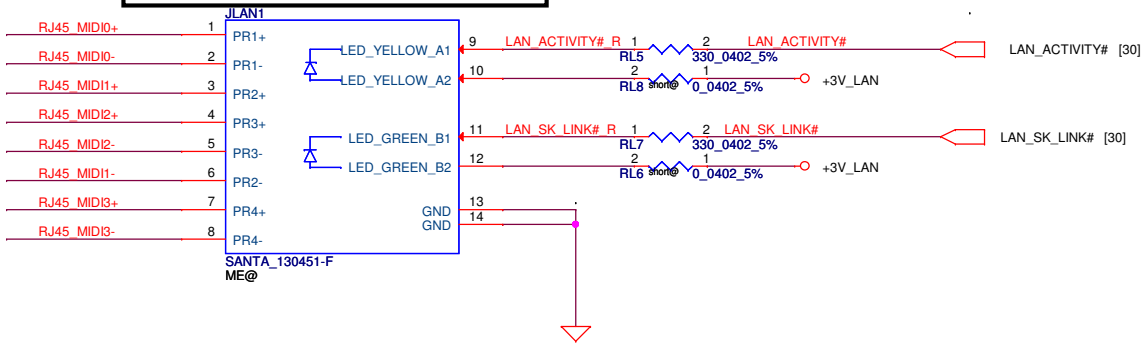

D20/D23
1'S PN:SC300001G00
2'S PN:SC300002E00

For EMI's request

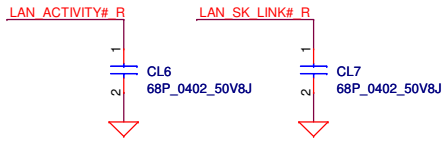

AMY WEN

Security Classification	Compal Secret Data		
Issued Date	2010/08/25	Deciphered Date	2012/08/25

THIS SHEET OF ENGINEERING DRAWING IS THE PROPRIETARY PROPERTY OF COMPAL ELECTRONICS, INC. AND CONTAINS CONFIDENTIAL AND TRADE SECRET INFORMATION. THIS SHEET MAY NOT BE TRANSFERED FROM THE CUSTODY OF THE COMPETENT DIVISION OF R&D DEPARTMENT EXCEPT AS AUTHORIZED BY COMPAL ELECTRONICS, INC. NEITHER THIS SHEET NOR THE INFORMATION IT CONTAINS MAY BE USED BY OR DISCLOSED TO ANY THIRD PARTY WITHOUT PRIOR WRITTEN CONSENT OF COMPAL ELECTRONICS, INC.

Compal Electronics, Inc.

Title: LAN_Transformer

Size: Custom | Document Number: LA-8671P_SDV | Rev: 1.0

Date: Thursday, October 04, 2012 | Sheet 31 of 50

Mini-Express Card for WLAN/BT Combo(Half)

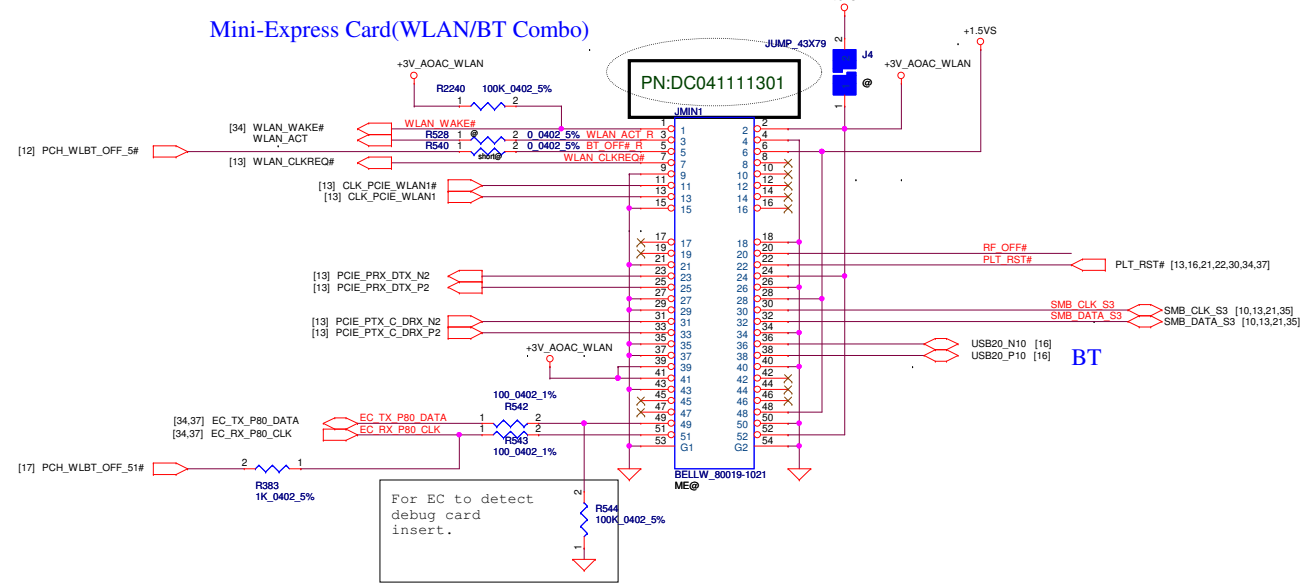

Mini-Express Card for WWAN/mSATA(Full)

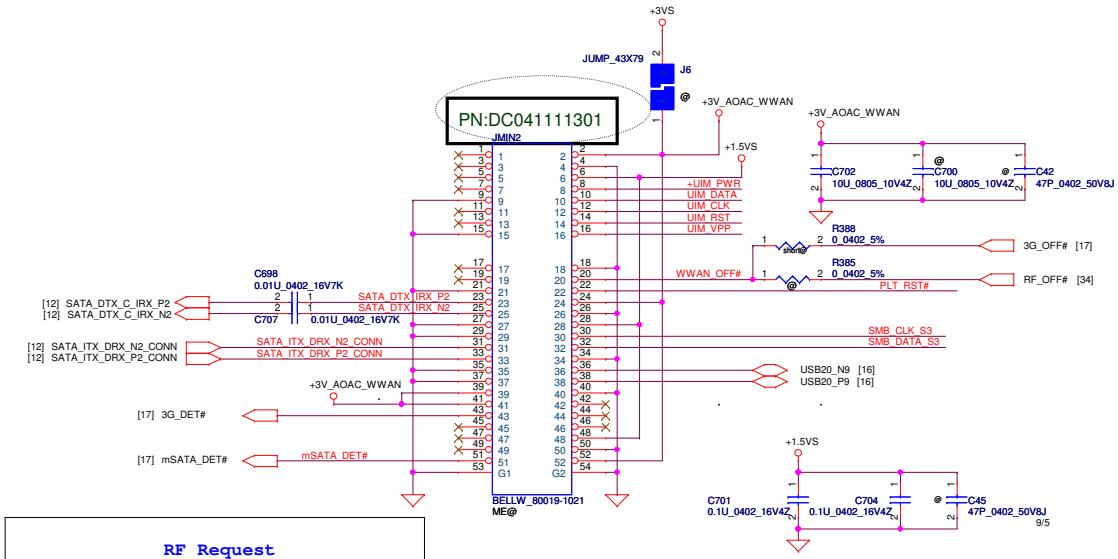

RF Request

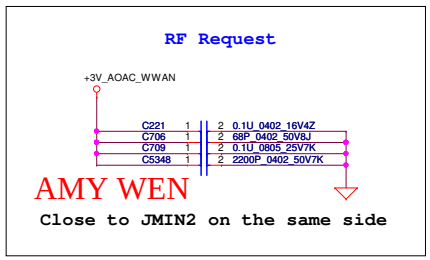

AOAC

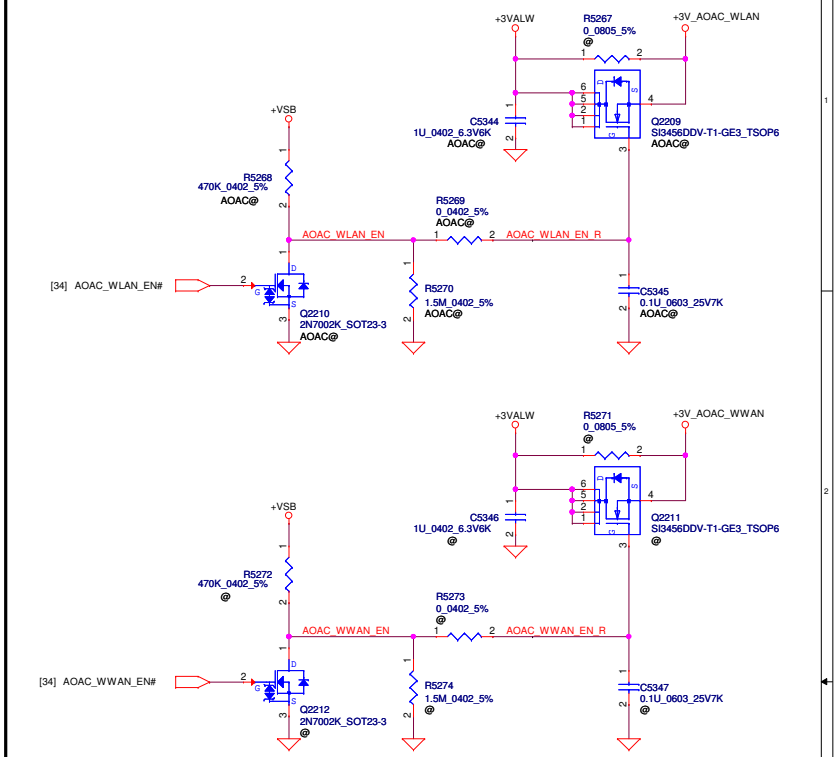

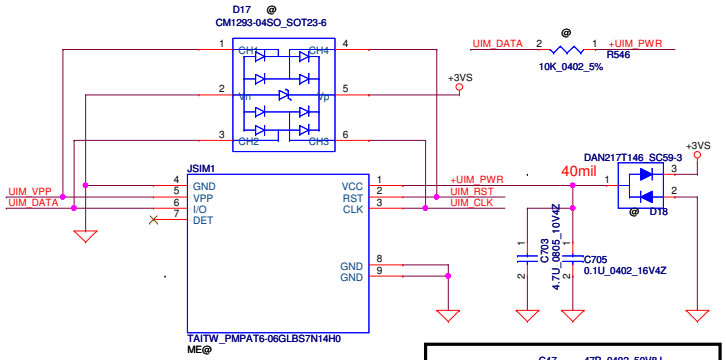

PN:SP07000LM00

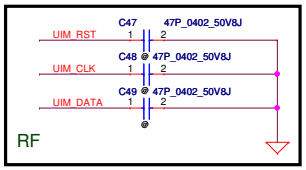

Security Classification	Compal Secret Data		
Issued Date	2010/08/25	Deciphered Date	2012/08/25

THIS SHEET OF ENGINEERING DRAWING IS THE PROPRIETARY PROPERTY OF COMPAL ELECTRONICS, INC. AND CONTAINS CONFIDENTIAL AND TRADE SECRET INFORMATION. THIS SHEET MAY NOT BE TRANSFERED FROM THE CUSTODY OF THE COMPETENT DIVISION OF R&D DEPARTMENT EXCEPT AS AUTHORIZED BY COMPAL ELECTRONICS, INC. NEITHER THIS SHEET NOR THE INFORMATION IT CONTAINS MAY BE USED BY OR DISCLOSED TO ANY THIRD PARTY WITHOUT PRIOR WRITTEN CONSENT OF COMPAL ELECTRONICS, INC.

Compal Electronics, Inc.

Title: WLAN/BT/WWAN/m-SATA

Size: Custom | Document Number: LA-8671P_SDV | Rev: 1.0

Date: Thursday, October 04, 2012 | Sheet 32 of 50

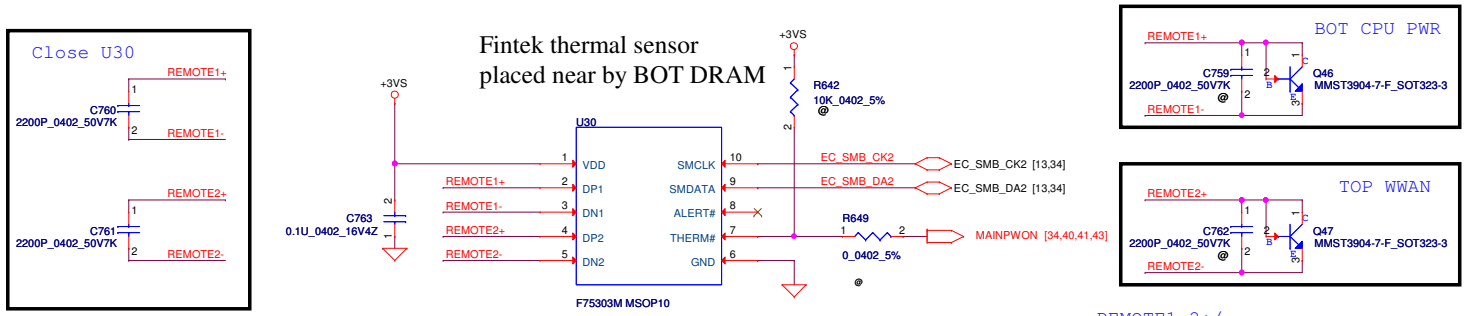

REMOTE1,2+/-:
Trace width/space:10/10 mil
Trace length:<8"

FAN +5VS DROOP

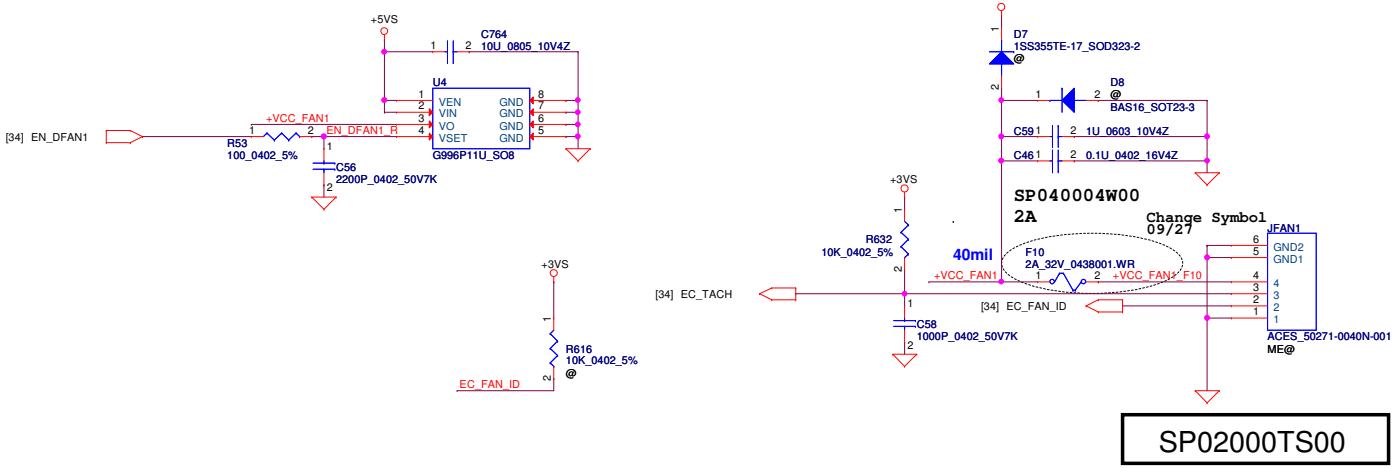

APS G-Sensor

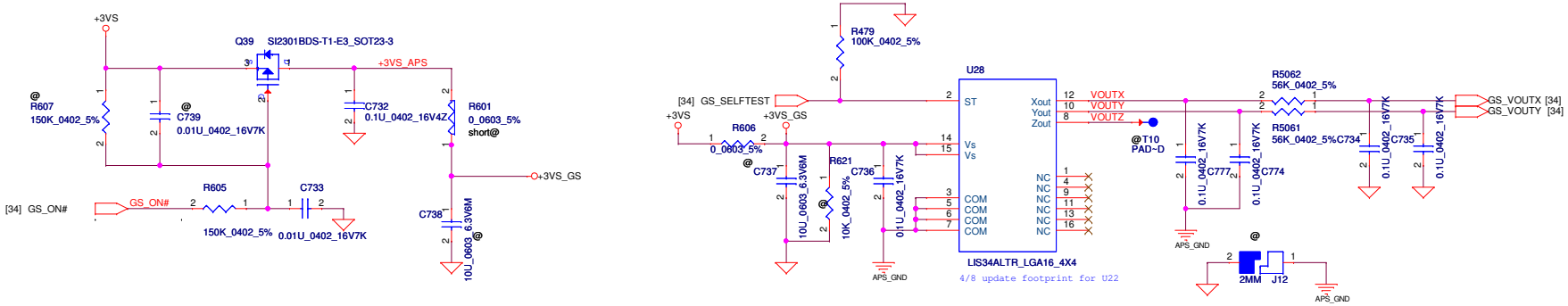

AMY WEN

Security Classification	Compal Secret Data		
Issued Date	2010/08/25	Deciphered Date	2012/08/25

THIS SHEET OF ENGINEERING DRAWING IS THE PROPRIETARY PROPERTY OF COMPAL ELECTRONICS, INC. AND CONTAINS CONFIDENTIAL AND TRADE SECRET INFORMATION. THIS SHEET MAY NOT BE TRANSFERED FROM THE CUSTODY OF THE COMPETENT DIVISION OF R&D DEPARTMENT EXCEPT AS AUTHORIZED BY COMPAL ELECTRONICS, INC. NEITHER THIS SHEET NOR THE INFORMATION IT CONTAINS MAY BE USED BY OR DISCLOSED TO ANY THIRD PARTY WITHOUT PRIOR WRITTEN CONSENT OF COMPAL ELECTRONICS, INC.

Compal Electronics,Ltd.

Title: FintekF57303_Thermal sensor/FAN

Size: Custom | Document Number: LA-8671P_SDV | Rev: 1.0

Date: Thursday, October 04, 2012 | Sheet 33 of 50

J18 : Open
J19 : Close

GPIO check with R16
1121 modify EC pin define.

Vcc	3.3V +/- 5%
R2210	100K +/- 1%

Board ID	R2213	V_{AD_BID} min	V_{AD_BID} typ	V_{AD_BID} max	
0	0K +/- 5%	0 V	0 V	0 V	SDV
1	8.2K +/- 5%	0.216 V	0.250 V	0.289 V	FVT
2	18K +/- 5%	0.436 V	0.503 V	0.538 V	SIT
3	33K +/- 5%	0.712 V	0.819 V	0.875 V	SIT-R
4	56K +/- 5%	1.036 V	1.185 V	1.264 V	SVT

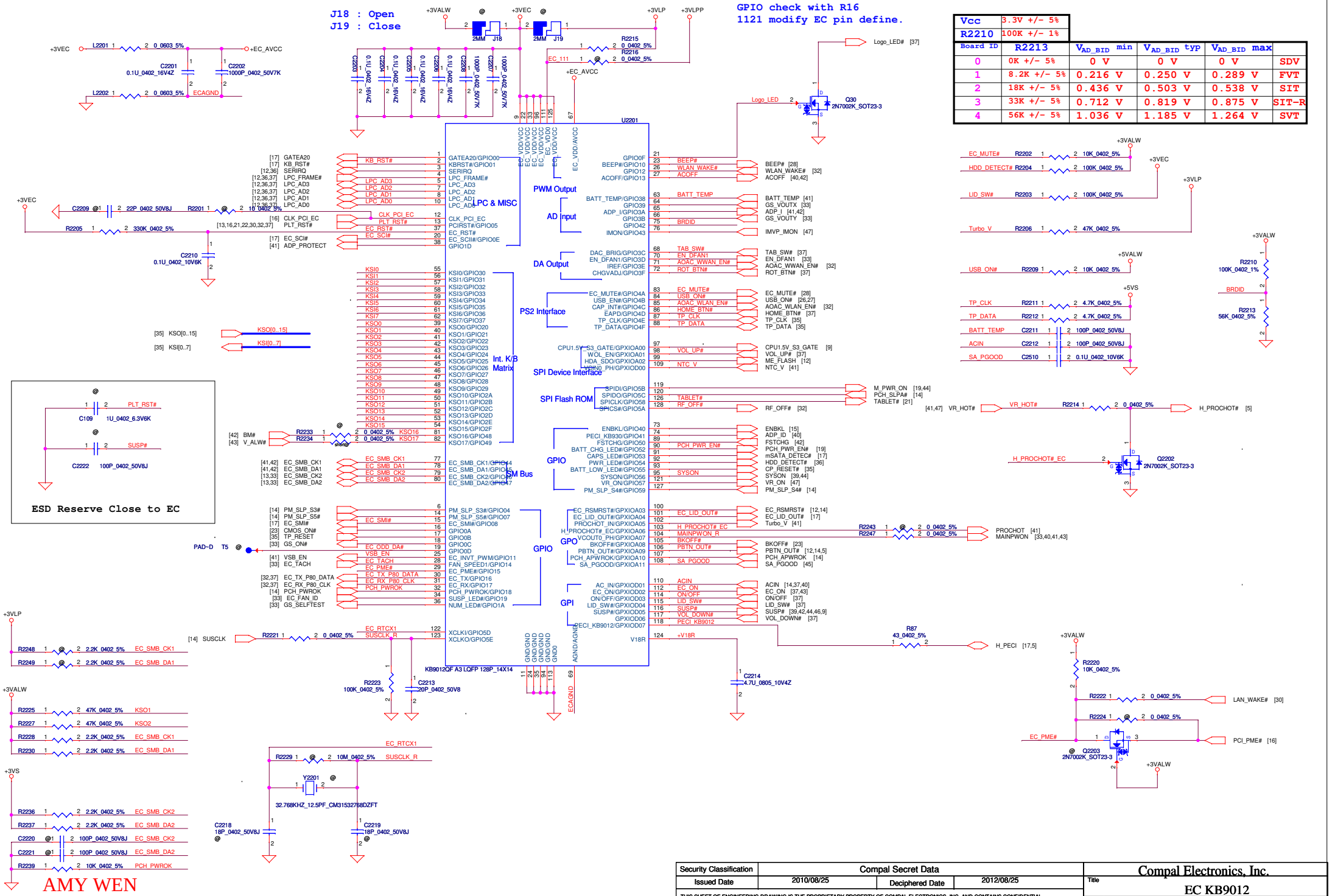

Security Classification	Compal Secret Data		
Issued Date	2010/08/25	Deciphered Date	2012/08/25

THIS SHEET OF ENGINEERING DRAWING IS THE PROPRIETARY PROPERTY OF COMPAL ELECTRONICS, INC. AND CONTAINS CONFIDENTIAL AND TRADE SECRET INFORMATION. THIS SHEET MAY NOT BE TRANSFERED FROM THE CUSTODY OF THE COMPETENT DIVISION OF R&D DEPARTMENT EXCEPT AS AUTHORIZED BY COMPAL ELECTRONICS, INC. NEITHER THIS SHEET NOR THE INFORMATION IT CONTAINS MAY BE USED BY OR DISCLOSED TO ANY THIRD PARTY WITHOUT PRIOR WRITTEN CONSENT OF COMPAL ELECTRONICS, INC.

Compal Electronics, Inc.

Title: EC KB9012

Size: Custom | Document Number: LA-8671P_SDV | Rev: 1.0

Date: Thursday, October 04, 2012 | Sheet 34 of 50

INT_KBD Conn.

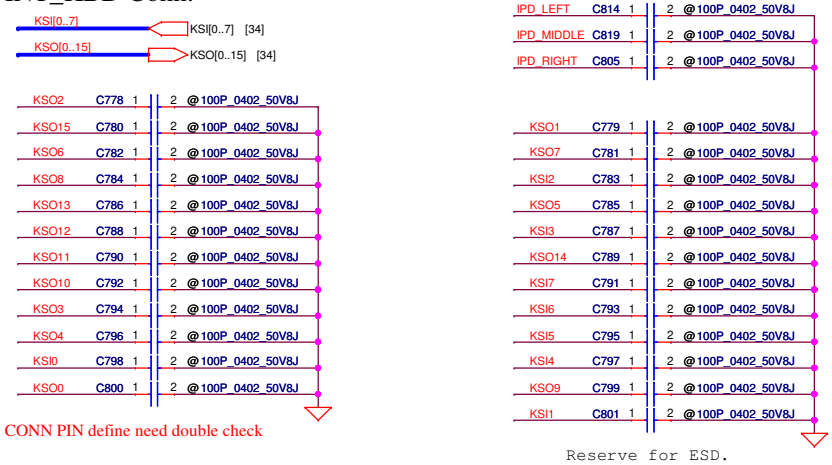

CONN PIN define need double check

Reserve for ESD.

INT_KBD Conn.

PN:SP01000YH00

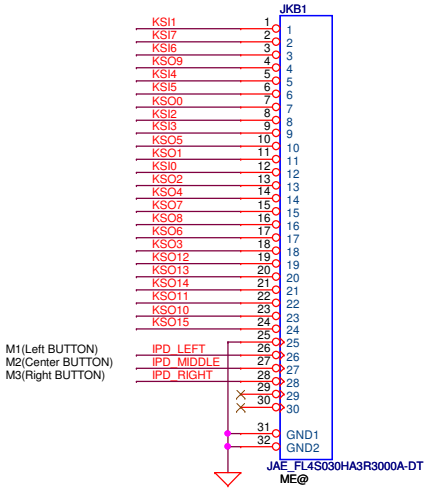

Track point

PN:SP01001CH00

SP040003600
1A

09/27

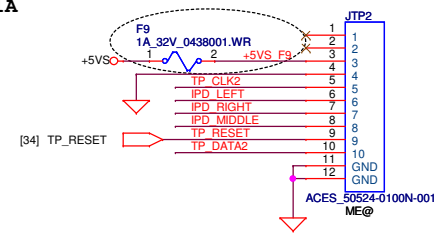

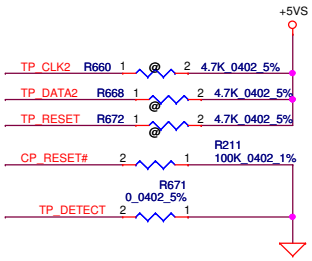

Click pad 10PIN

SP01001AL00

09/27

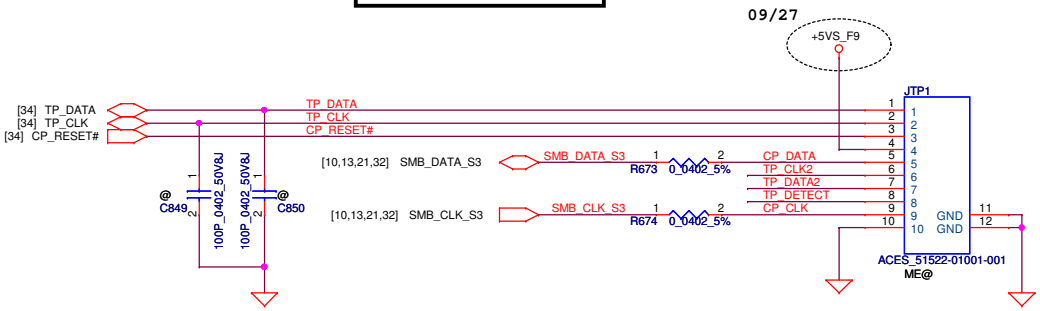

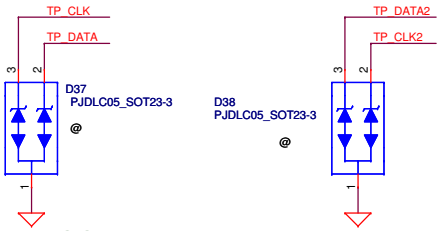

PN: SCA00000U10 X 2

AMY WEN

Security Classification	Compal Secret Data		
Issued Date	2010/08/25	Deciphered Date	2012/08/25

THIS SHEET OF ENGINEERING DRAWING IS THE PROPRIETARY PROPERTY OF COMPAL ELECTRONICS, INC. AND CONTAINS CONFIDENTIAL AND TRADE SECRET INFORMATION. THIS SHEET MAY NOT BE TRANSFERED FROM THE CUSTODY OF THE COMPETENT DIVISION OF R&D DEPARTMENT EXCEPT AS AUTHORIZED BY COMPAL ELECTRONICS, INC. NEITHER THIS SHEET NOR THE INFORMATION IT CONTAINS MAY BE USED BY OR DISCLOSED TO ANY THIRD PARTY WITHOUT PRIOR WRITTEN CONSENT OF COMPAL ELECTRONICS, INC.

Compal Electronics, Inc.

Title: KB /SW .

Size: Custom | Document Number: LA-8671P_SDV | Rev: 1.0

Date: Thursday, October 04, 2012 | Sheet 35 of 50

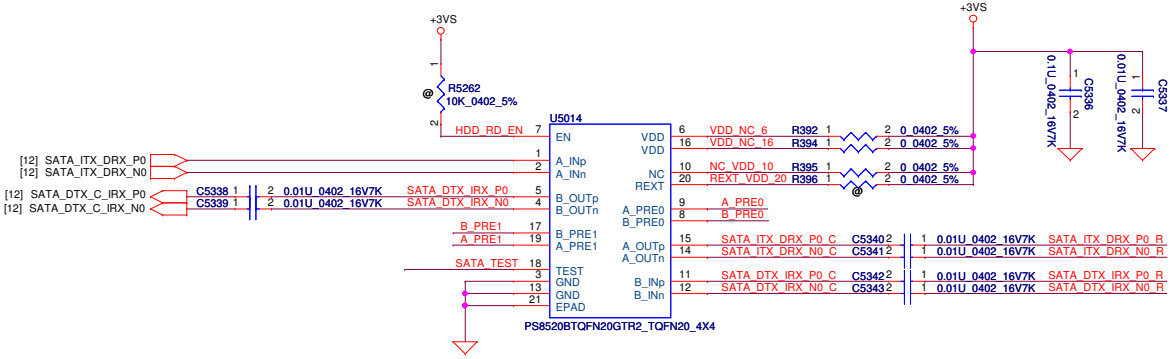

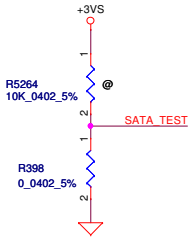

	TEST (Internal Low)
Normal Mode (Default)	LOW
Test Mode	HIGH

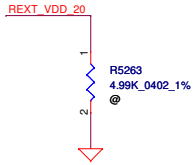

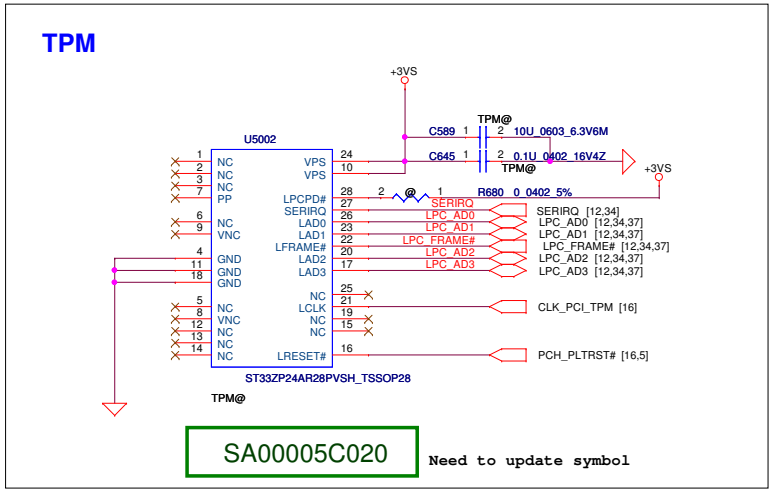

SA00005C020

Need to update symbol

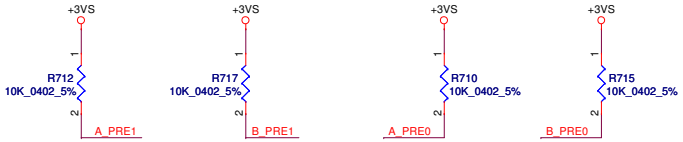

Remove pull-low

	A_PRE1/B_PRE1 (Internal pull Low)	A_PRE0/B_PRE0 (Internal pull Low)
0dB, no pre-emphasis	Low	Low
1.5dB pre-emphasis is selected	Low	High
2.5dB pre-emphasis is selected	High	Low
3.5dB pre-emphasis is selected	High	High

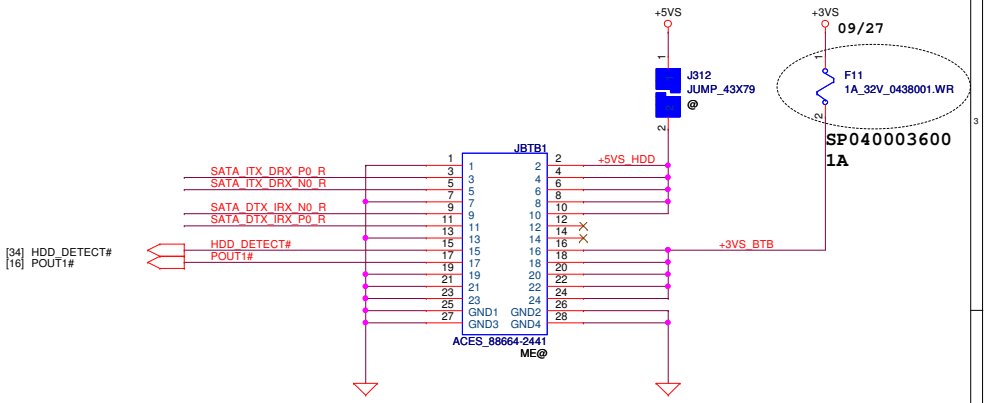

AMY WEN

Security Classification	Compal Secret Data		
Issued Date	2010/08/25	Deciphered Date	2012/08/25

THIS SHEET OF ENGINEERING DRAWING IS THE PROPRIETARY PROPERTY OF COMPAL ELECTRONICS, INC. AND CONTAINS CONFIDENTIAL AND TRADE SECRET INFORMATION. THIS SHEET MAY NOT BE TRANSFERED FROM THE CUSTODY OF THE COMPETENT DIVISION OF R&D DEPARTMENT EXCEPT AS AUTHORIZED BY COMPAL ELECTRONICS, INC. NEITHER THIS SHEET NOR THE INFORMATION IT CONTAINS MAY BE USED BY OR DISCLOSED TO ANY THIRD PARTY WITHOUT PRIOR WRITTEN CONSENT OF COMPAL ELECTRONICS, INC.

Compal Electronics, Inc.

Title: HDD BTB Connector/TPM

Size: Custom | Document Number: LA-8671P_SDV | Rev: 1.0

Date: Thursday, October 04, 2012 | Sheet 36 of 50

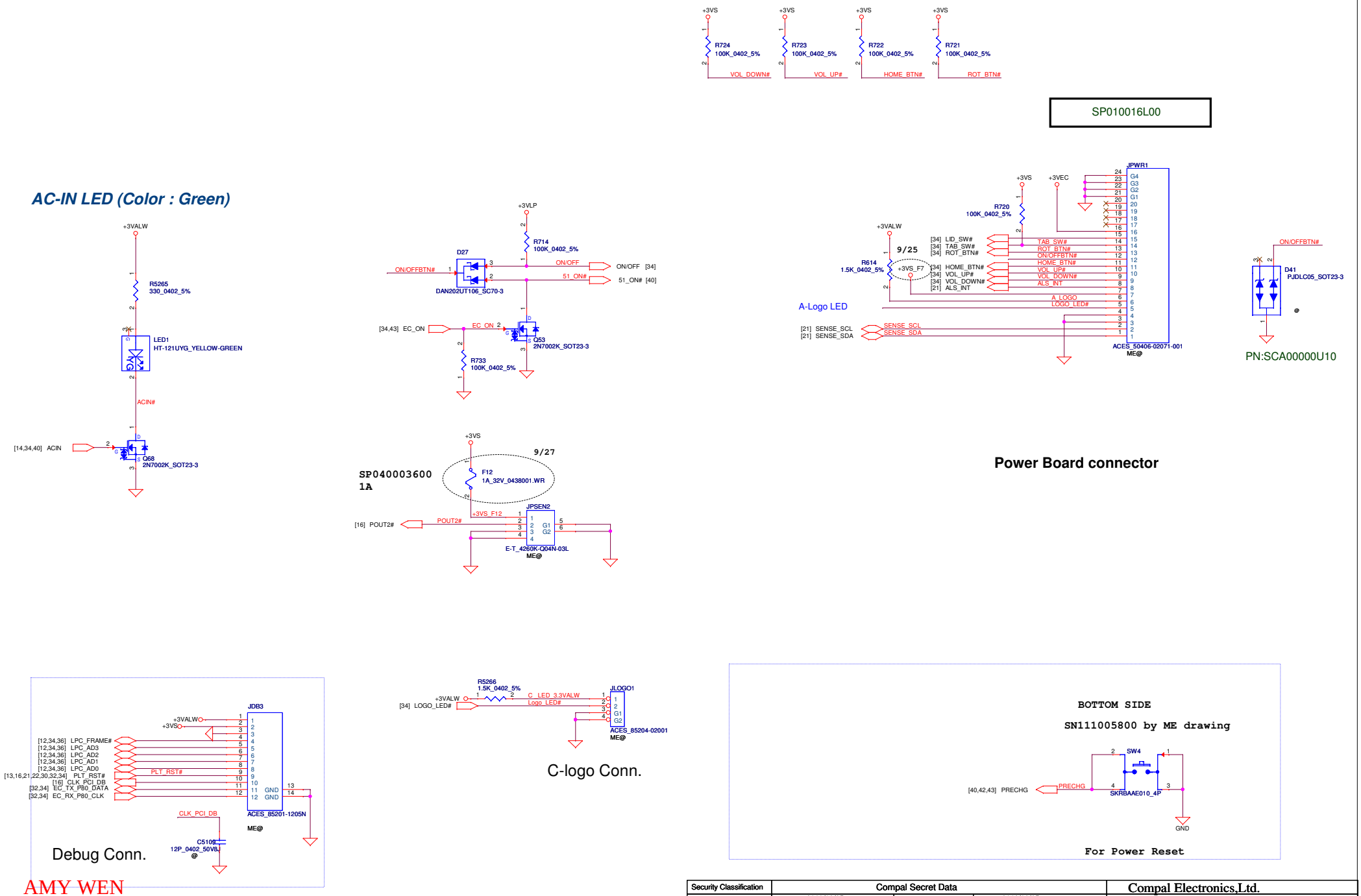

AMY WEN

Security Classification	Compal Secret Data		
Issued Date	2010/08/25	Deciphered Date	2012/08/25

THIS SHEET OF ENGINEERING DRAWING IS THE PROPRIETARY PROPERTY OF COMPAL ELECTRONICS, INC. AND CONTAINS CONFIDENTIAL AND TRADE SECRET INFORMATION. THIS SHEET MAY NOT BE TRANSFERED FROM THE CUSTODY OF THE COMPETENT DIVISION OF R&D DEPARTMENT EXCEPT AS AUTHORIZED BY COMPAL ELECTRONICS, INC. NEITHER THIS SHEET NOR THE INFORMATION IT CONTAINS MAY BE USED BY OR DISCLOSED TO ANY THIRD PARTY WITHOUT PRIOR WRITTEN CONSENT OF COMPAL ELECTRONICS, INC.

Compal Electronics,Ltd.

Title: other IO connector

Size: Custom | Document Number: LA-8671P_SDV | Rev: 1A

Date: Thursday, October 04, 2012 | Sheet 37 of 50

PT-H 20 SCREW HOLE

H_2P3

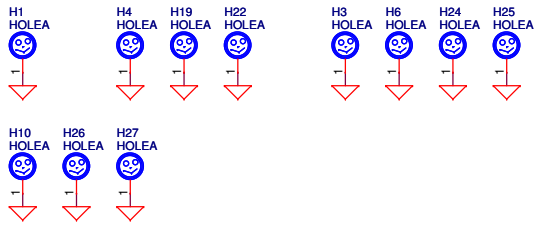

H_3P3

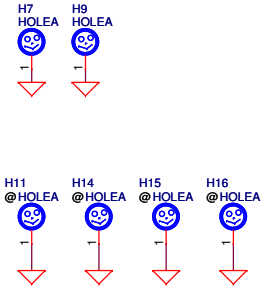

H_6P0

NON-PT-H 1 SCREW HOLE

H_2P4N

AMY WEN

Security Classification	Compal Secret Data		
Issued Date	2010/08/25	Deciphered Date	2012/08/25

THIS SHEET OF ENGINEERING DRAWING IS THE PROPRIETARY PROPERTY OF COMPAL ELECTRONICS, INC. AND CONTAINS CONFIDENTIAL AND TRADE SECRET INFORMATION. THIS SHEET MAY NOT BE TRANSFERED FROM THE CUSTODY OF THE COMPETENT DIVISION OF R&D DEPARTMENT EXCEPT AS AUTHORIZED BY COMPAL ELECTRONICS, INC. NEITHER THIS SHEET NOR THE INFORMATION IT CONTAINS MAY BE USED BY OR DISCLOSED TO ANY THIRD PARTY WITHOUT PRIOR WRITTEN CONSENT OF COMPAL ELECTRONICS, INC.

Compal Electronics, Inc.

Title: SCREW HOLE

Size: Custom | Document Number: LA-8671P_SDV | Rev: 1.0

Date: Thursday, October 04, 2012 | Sheet 38 of 50

+5VALW TO +5VS

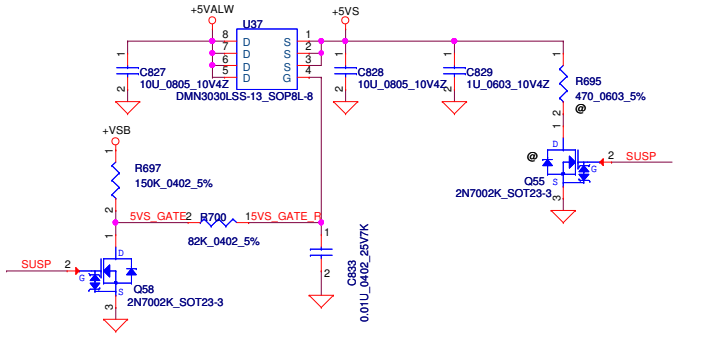

+3VALW TO +3VS

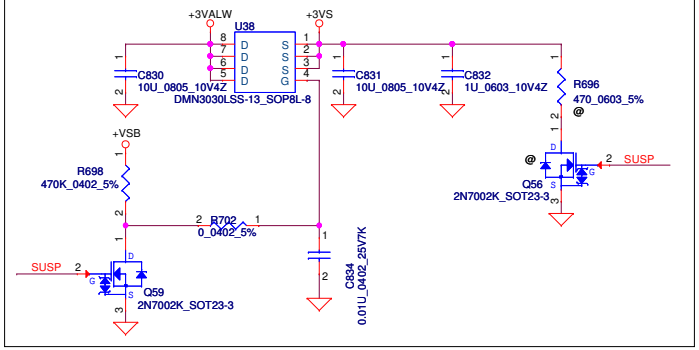

+1.5V to +1.5VS

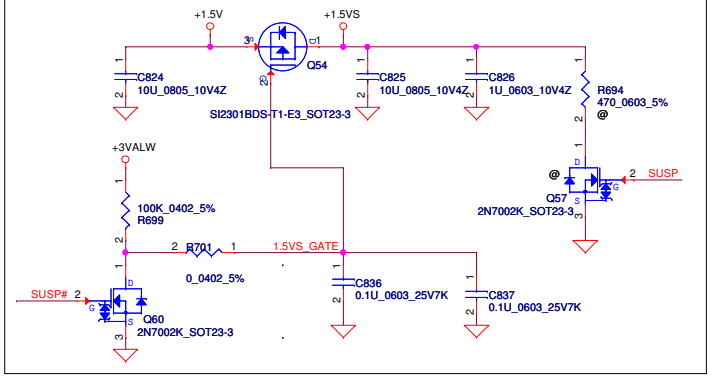

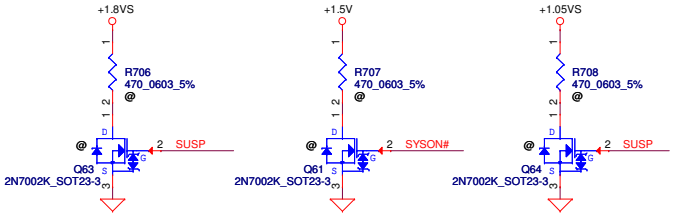

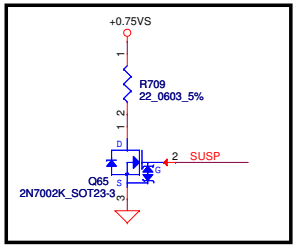

For Intel S3 Power Reduction.

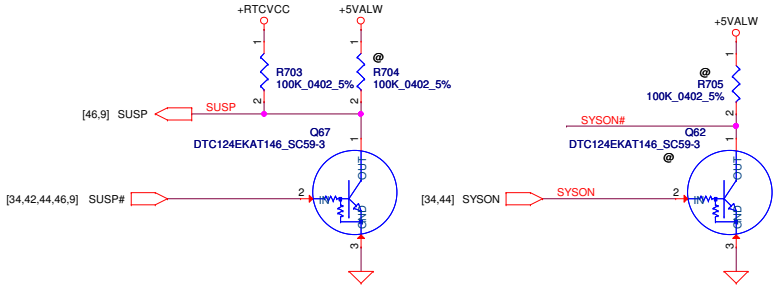

AMY WEN

Security Classification	Compal Secret Data		
Issued Date	2010/08/25	Deciphered Date	2012/08/25

THIS SHEET OF ENGINEERING DRAWING IS THE PROPRIETARY PROPERTY OF COMPAL ELECTRONICS, INC. AND CONTAINS CONFIDENTIAL AND TRADE SECRET INFORMATION. THIS SHEET MAY NOT BE TRANSFERED FROM THE CUSTODY OF THE COMPETENT DIVISION OF R&D DEPARTMENT EXCEPT AS AUTHORIZED BY COMPAL ELECTRONICS, INC. NEITHER THIS SHEET NOR THE INFORMATION IT CONTAINS MAY BE USED BY OR DISCLOSED TO ANY THIRD PARTY WITHOUT PRIOR WRITTEN CONSENT OF COMPAL ELECTRONICS, INC.

Compal Electronics, Inc.

Title: DC Interface

Size: Custom | Document Number: LA-8671P_SDV | Rev: 1.0

Date: Thursday, October 04, 2012 | Sheet 39 of 50

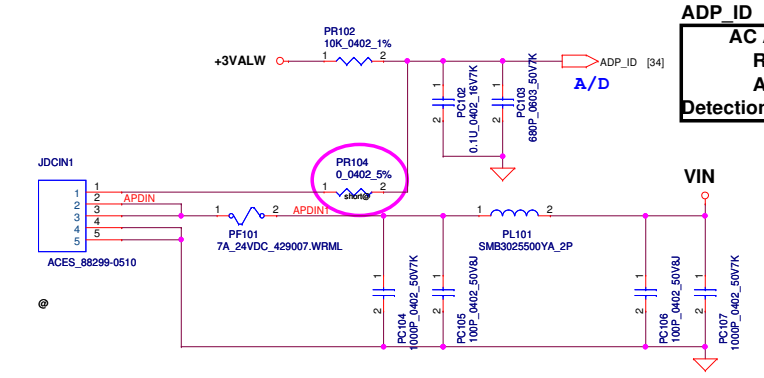

ADP_ID

AC Adapter	90W	65W
R(K ohm)	open	10
ADP_ID(V)	3.3	1.65
Detection voltage	>2.64	1.32~1.98

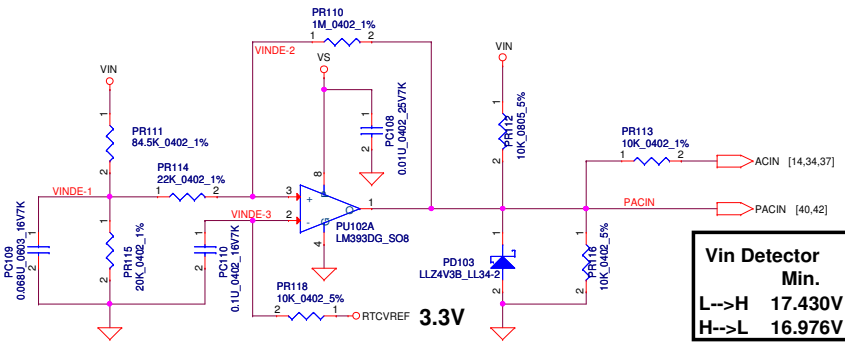

Vin Detector

	Min.	typ.	Max.
L-->H	17.430V	17.901V	18.384V
H-->L	16.976V	17.262V	17.728V

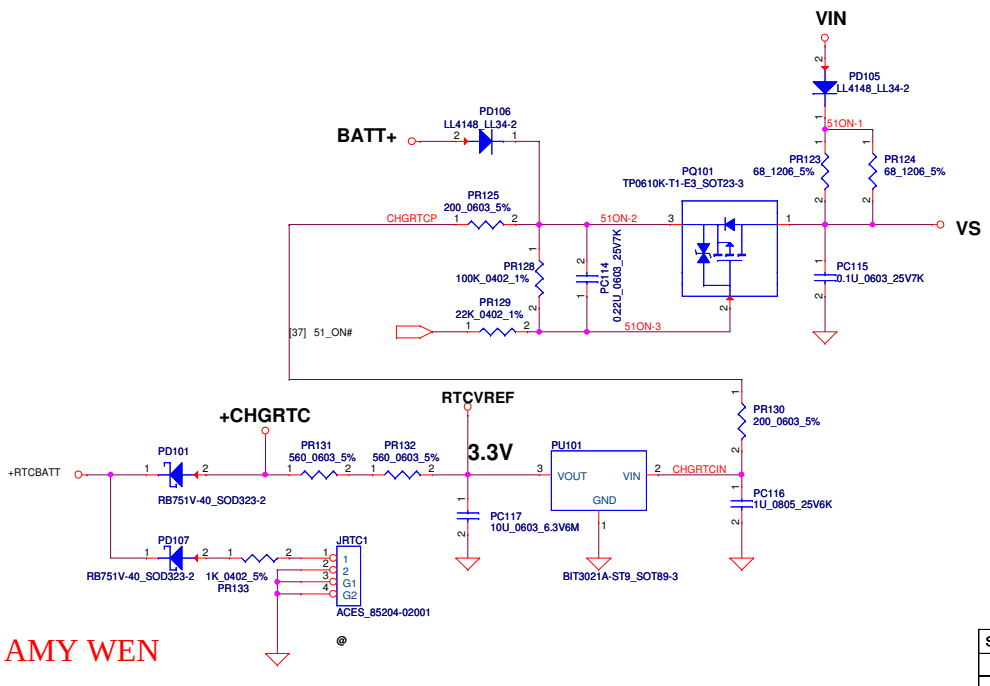

AMY WEN

Precharge detector 15.97V/14.84V FOR ADAPTOR

ACIN

Precharge detector	Min.	typ.	Max.
L-->H	14.991V	15.381V	15.782V
H-->L	13.860V	14.247V	14.621V

BATT ONLY

Precharge detector	Min.	typ.	Max.
L-->H	7.196V	7.349V	7.505V
H-->L	6.138V	6.214V	6.056V

Security Classification	Compal Secret Data		
Issued Date	2010/01/25	Deciphered Date	2010/12/31

THIS SHEET OF ENGINEERING DRAWING IS THE PROPRIETARY PROPERTY OF COMPAL ELECTRONICS, INC. AND CONTAINS CONFIDENTIAL AND TRADE SECRET INFORMATION. THIS SHEET MAY NOT BE TRANSFERED FROM THE CUSTODY OF THE COMPETENT DIVISION OF R&D DEPARTMENT EXCEPT AS AUTHORIZED BY COMPAL ELECTRONICS, INC. NEITHER THIS SHEET NOR THE INFORMATION IT CONTAINS MAY BE USED BY OR DISCLOSED TO ANY THIRD PARTY WITHOUT PRIOR WRITTEN CONSENT OF COMPAL ELECTRONICS, INC.

Compal Electronics, Inc.

Title: PWR DCIN / Vin Detector /Pre-charge

Size: Custom | Document Number: C38 Chief River Schematic | Rev: 0.4

Date: Thursday, October 04, 2012 | Sheet 40 of 50

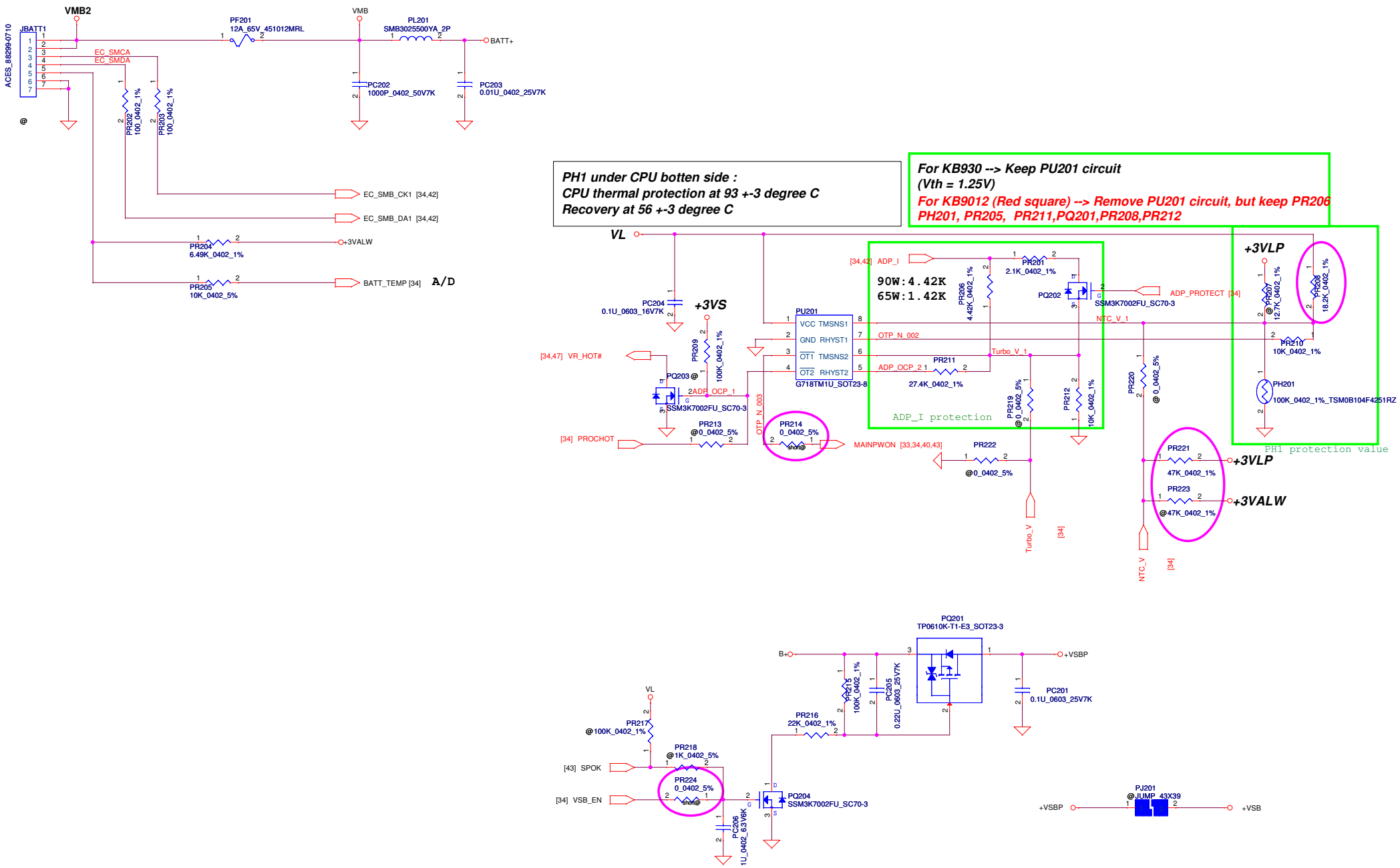

AMY WEN

Security Classification	Compal Secret Data		
Issued Date	2010/01/25	Deciphered Date	2010/12/31

THIS SHEET OF ENGINEERING DRAWING IS THE PROPRIETARY PROPERTY OF COMPAL ELECTRONICS, INC. AND CONTAINS CONFIDENTIAL AND TRADE SECRET INFORMATION. THIS SHEET MAY NOT BE TRANSFERED FROM THE CUSTODY OF THE COMPETENT DIVISION OF R&D DEPARTMENT EXCEPT AS AUTHORIZED BY COMPAL ELECTRONICS, INC. NEITHER THIS SHEET NOR THE INFORMATION IT CONTAINS MAY BE USED BY OR DISCLOSED TO ANY THIRD PARTY WITHOUT PRIOR WRITTEN CONSENT OF COMPAL ELECTRONICS, INC.

Compal Electronics, Inc.

Title: PWR-BATTERY CONN/OTP

Size: Custom | Document Number: C38 Chief River Schematic | Rev: 1.0

Date: Thursday, October 04, 2012 | Sheet 41 of 50

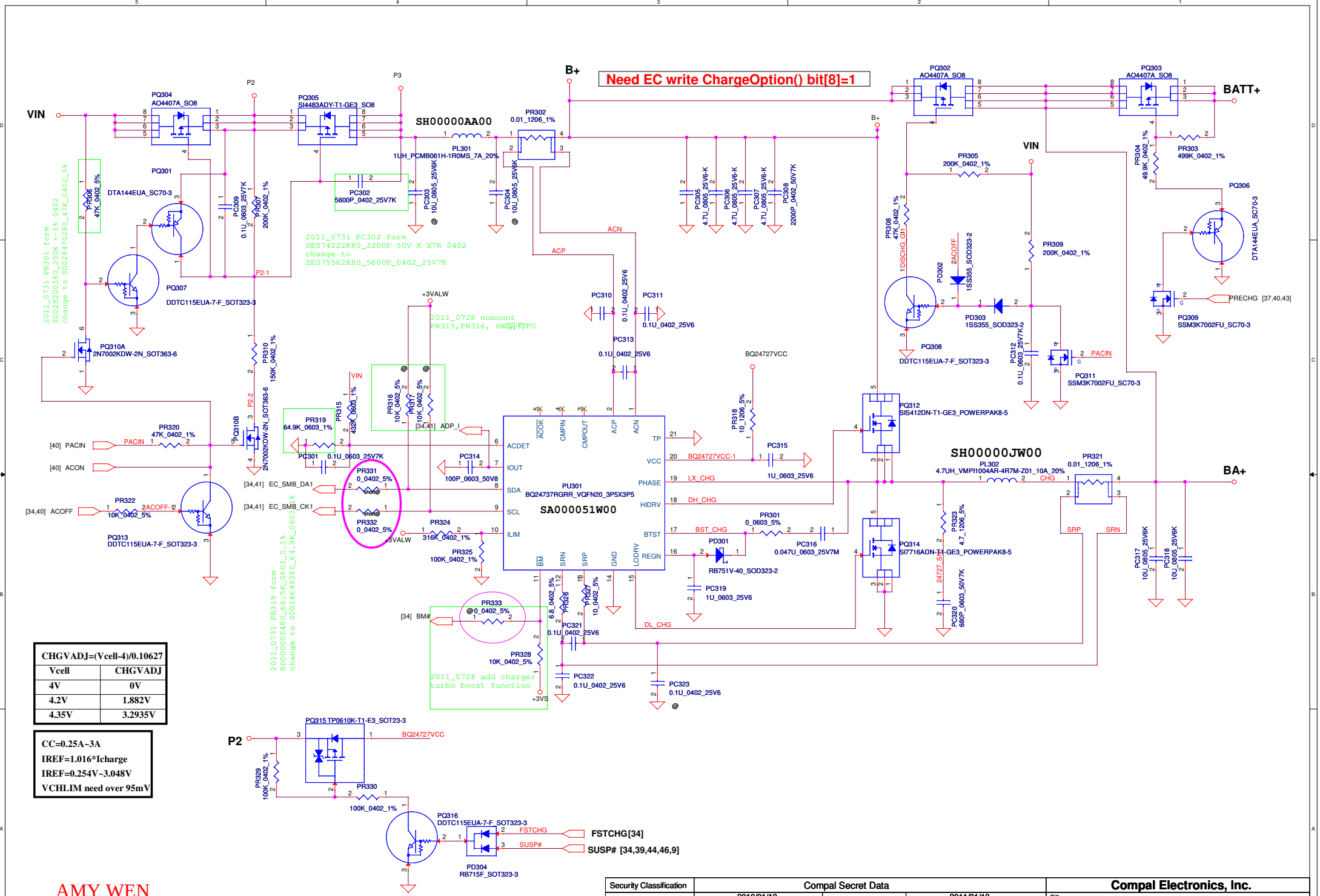
Need EC write ChargeOption() bit[8]=1
VIN
B+
BATT+
BA+
P2
P3
SH00000AA00
SH00000JW00
SA000051W00
PU301
BQ24737RGRR_VQFN20_3P5X3P5
PQ304 AO4407A_SO8
PQ305 SI4483ADY-T1-GE3_SO8
PQ302 AO4407A_SO8
PQ303 AO4407A_SO8
PL301 1UH_PCMB061H-1R0MS_7A_20%
PL302 4.7UH_VMPI1004AR-4R7M-Z01_10A_20%
PR302 0.01_1206_1%
PR321 0.01_1206_1%
PQ312 SIS412DN-T1-GE3_POWERPAK8-5
PQ314 SI7716ADN-T1-GE3_POWERPAK8-5
PQ315 TP0610K-T1-E3_SOT23-3
PQ316 DDTC115EUA-7-F_SOT323-3
PD304 RB715F_SOT323-3
PD301 RB751V-40_SOD323-2
PRECHG [37,40,43]
PACIN
ACON
ACOFF
BM#
FSTCHG
SUSP# [34,39,44,46,9]
2011_0731 PC302 form
SE074222K80_2200P 50V K X7R 0402
change to
SE075562K80_5600P_0402_25V7K
2011_0728 numount
PR315,PR316, HW端有PU
2011_0728 add charger
turbo boost function
2011_0731 PR319 form
SD014649280_64.9K_0603_0.1%
change to SD014649280_64.9K_0603_0.1%
2011_0731 PR301 form
SD028200380_200K +-5% 0402
change to SD028470280_47K_0402_5%
CHGVADJ=(Vcell-4)/0.10627
Vcell | CHGVADJ
4V | 0V
4.2V | 1.882V
4.35V | 3.2935V
CC=0.25A~3A
IREF=1.016*Icharge
IREF=0.254V~3.048V
VCHLIM need over 95mV
AMY WEN
Security Classification
Compal Secret Data
Issued Date
2010/01/13
Deciphered Date
2011/01/13
Compal Electronics, Inc.
Title
CHARGER
C38 Chief River Schematic
Size
Document Number
Rev 1.0
Date: Thursday, October 04, 2012
Sheet 42 of 50

Note:
Use TPS51125 IC can remove RTC refernece LDO
Use TPS51427 IC must keep RTC refernece LDO

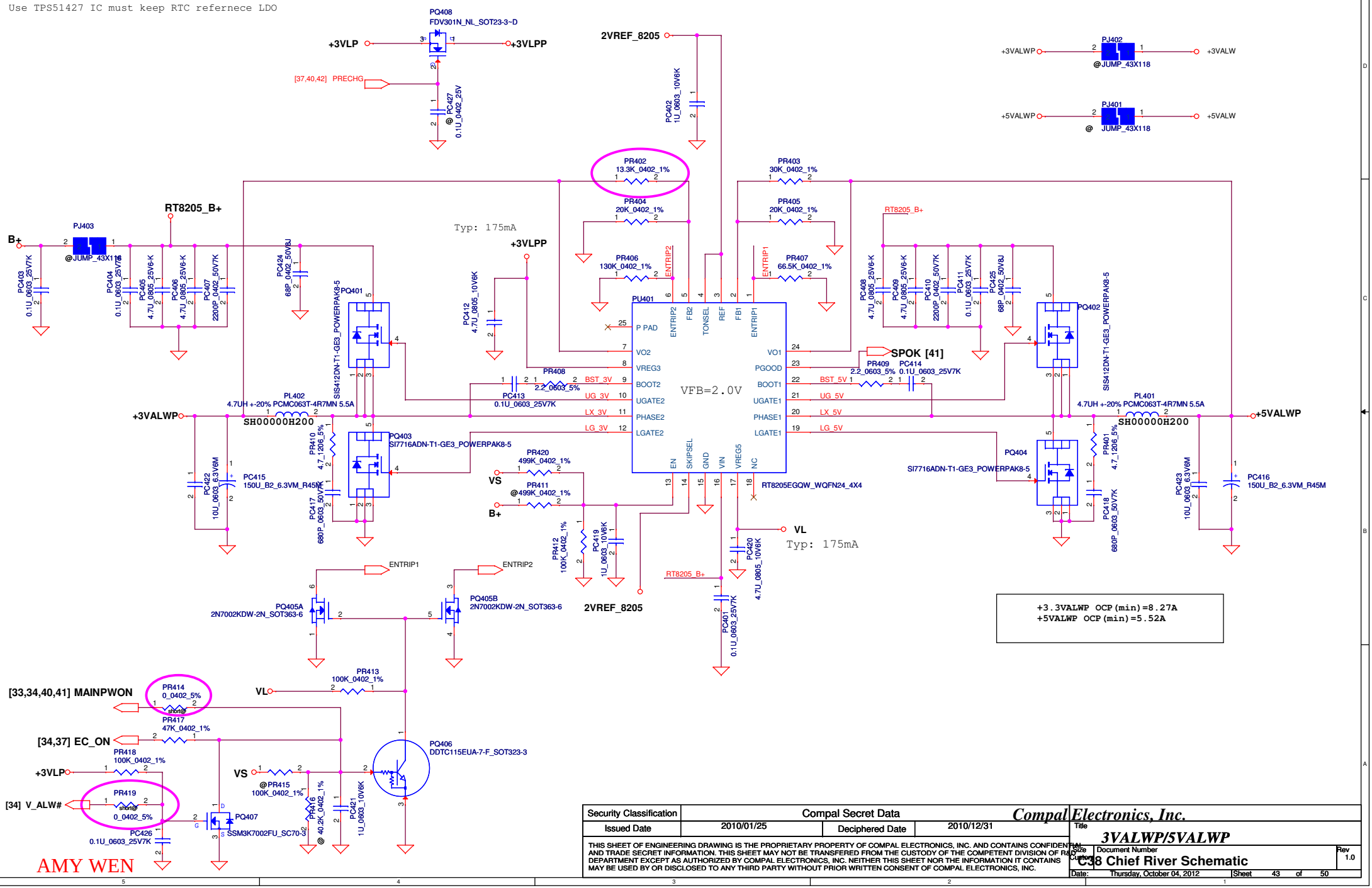

AMY WEN

Security Classification	Compal Secret Data		
Issued Date	2010/01/25	Deciphered Date	2010/12/31

THIS SHEET OF ENGINEERING DRAWING IS THE PROPRIETARY PROPERTY OF COMPAL ELECTRONICS, INC. AND CONTAINS CONFIDENTIAL AND TRADE SECRET INFORMATION. THIS SHEET MAY NOT BE TRANSFERED FROM THE CUSTODY OF THE COMPETENT DIVISION OF R&D DEPARTMENT EXCEPT AS AUTHORIZED BY COMPAL ELECTRONICS, INC. NEITHER THIS SHEET NOR THE INFORMATION IT CONTAINS MAY BE USED BY OR DISCLOSED TO ANY THIRD PARTY WITHOUT PRIOR WRITTEN CONSENT OF COMPAL ELECTRONICS, INC.

Compal Electronics, Inc.

Title: 3VALWP/5VALWP

Size: Custom | Document Number: C38 Chief River Schematic | Rev: 1.0

Date: Thursday, October 04, 2012 | Sheet 43 of 50

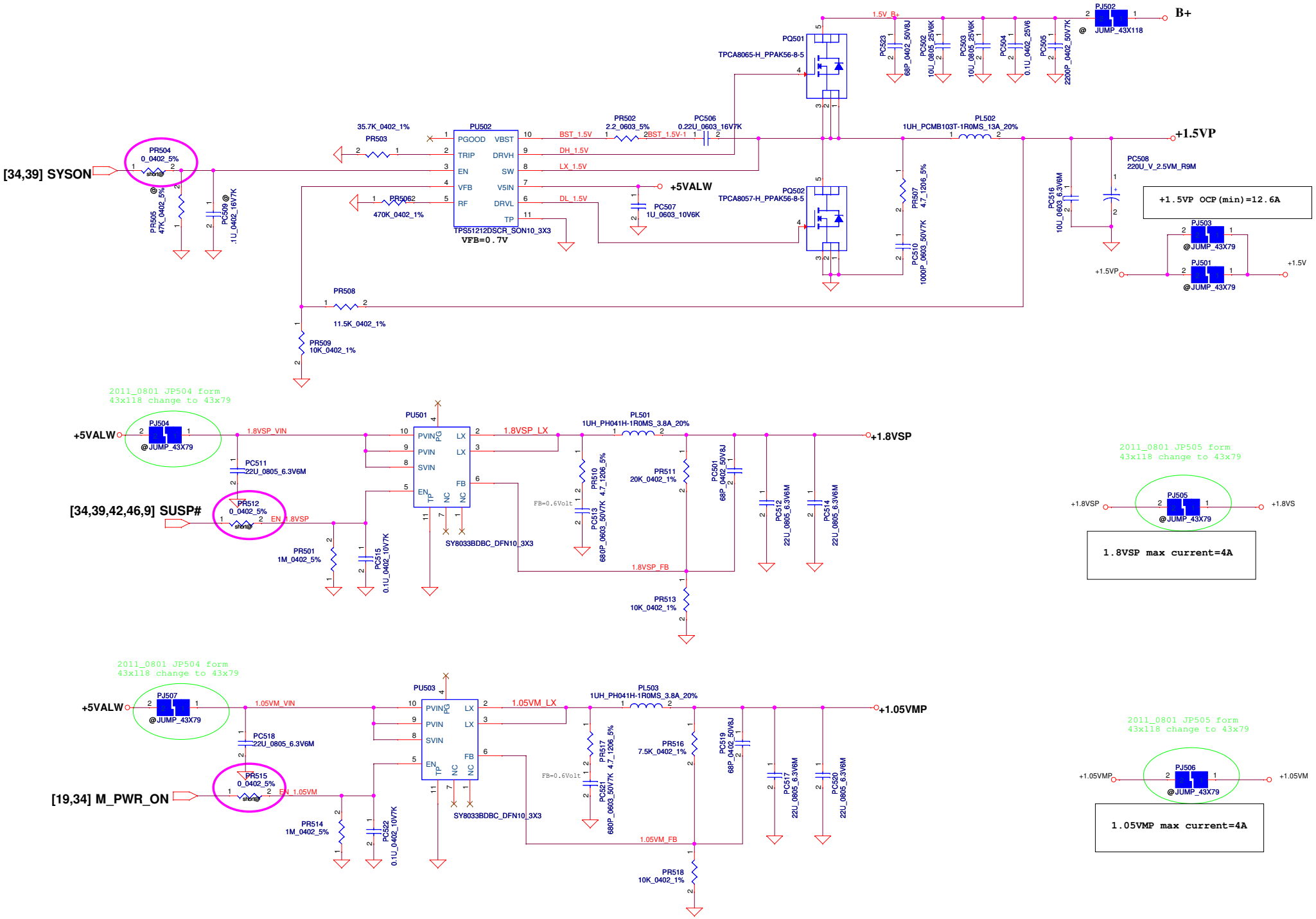

AMY WEN

Security Classification	Compal Secret Data		
Issued Date	2010/01/25	Deciphered Date	2010/12/31

THIS SHEET OF ENGINEERING DRAWING IS THE PROPRIETARY PROPERTY OF COMPAL ELECTRONICS, INC. AND CONTAINS CONFIDENTIAL AND TRADE SECRET INFORMATION. THIS SHEET MAY NOT BE TRANSFERED FROM THE CUSTODY OF THE COMPETENT DIVISION OF R&D DEPARTMENT EXCEPT AS AUTHORIZED BY COMPAL ELECTRONICS, INC. NEITHER THIS SHEET NOR THE INFORMATION IT CONTAINS MAY BE USED BY OR DISCLOSED TO ANY THIRD PARTY WITHOUT PRIOR WRITTEN CONSENT OF COMPAL ELECTRONICS, INC.

Compal Electronics, Inc.

Title: PWR-+1.5VP/+1.8VSP

Size: Custom | Document Number: C38 Chief River Schematic | Rev: 1.0

Date: Thursday, October 04, 2012 | Sheet 44 of 50

VID [0]	VID[1]	VCCSA Vout
0	0	0.9V
0	1	0.85V
1	0	0.775V
1	1	0.75V

output voltage adjustable network

+VCC_SAP
TDC 2.9A
Peak Current 4A
OCP current 5.4A

The 1k PD on the VCCSA VIDs are empty. These should be stuffed to ensure that VCCSA VID is 00 prior to VCCIO stability.

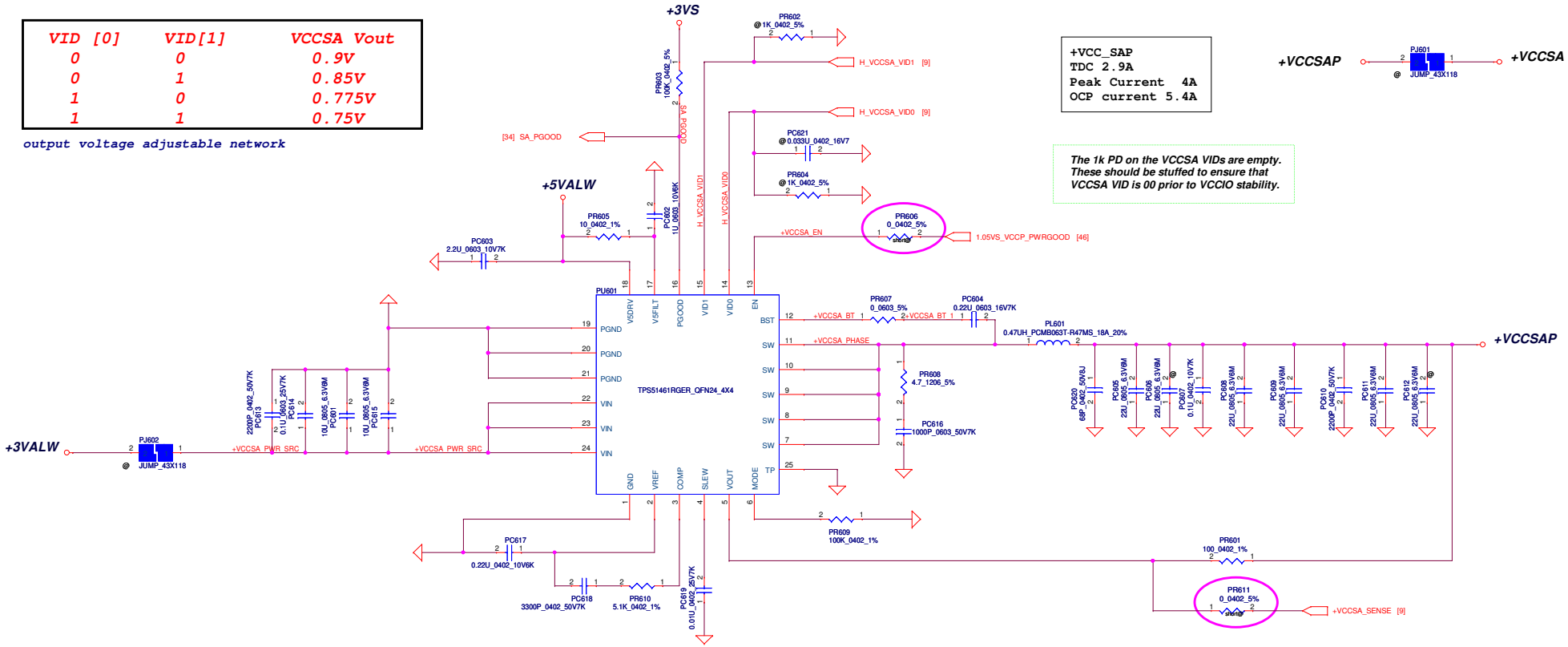

2011_0801 del +V1.05S_VCCPP circuit

AMY WEN

Security Classification	Compal Secret Data		
Issued Date	2010/01/25	Deciphered Date	2010/12/31

THIS SHEET OF ENGINEERING DRAWING IS THE PROPRIETARY PROPERTY OF COMPAL ELECTRONICS, INC. AND CONTAINS CONFIDENTIAL AND TRADE SECRET INFORMATION. THIS SHEET MAY NOT BE TRANSFERED FROM THE CUSTODY OF THE COMPETENT DIVISION OF R&D DEPARTMENT EXCEPT AS AUTHORIZED BY COMPAL ELECTRONICS, INC. NEITHER THIS SHEET NOR THE INFORMATION IT CONTAINS MAY BE USED BY OR DISCLOSED TO ANY THIRD PARTY WITHOUT PRIOR WRITTEN CONSENT OF COMPAL ELECTRONICS, INC.

Compal Electronics, Inc.

Title: PWR +VCCSAP

Size: C | Document Number: C38 Chief River Schematic | Rev: 1.0

Date: Thursday, October 04, 2012 | Sheet 45 of 50

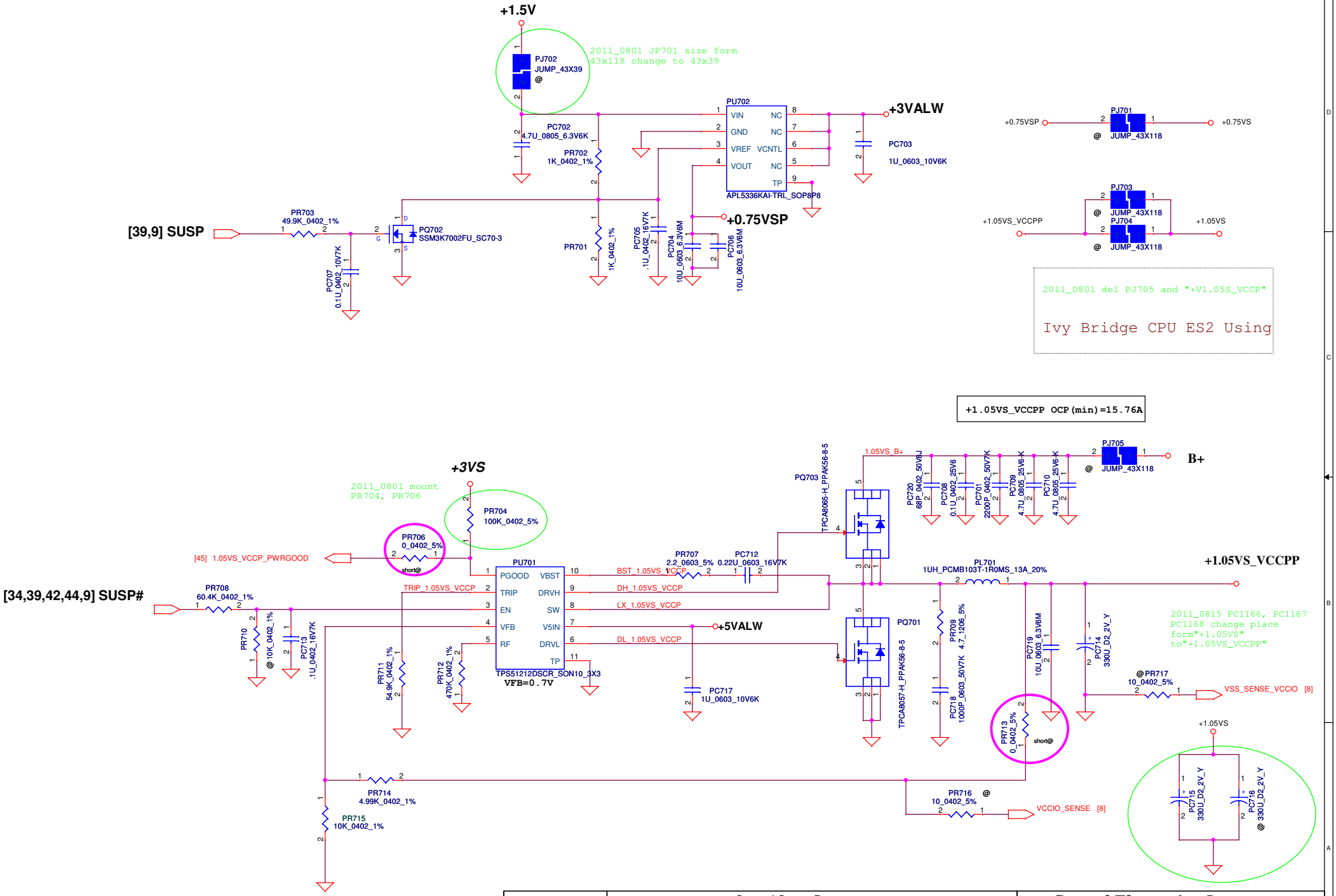

AMY WEN

Security Classification	Compal Secret Data		
Issued Date	2010/01/25	Deciphered Date	2010/12/31

THIS SHEET OF ENGINEERING DRAWING IS THE PROPRIETARY PROPERTY OF COMPAL ELECTRONICS, INC. AND CONTAINS CONFIDENTIAL AND TRADE SECRET INFORMATION. THIS SHEET MAY NOT BE TRANSFERED FROM THE CUSTODY OF THE COMPETENT DIVISION OF R&D DEPARTMENT EXCEPT AS AUTHORIZED BY COMPAL ELECTRONICS, INC. NEITHER THIS SHEET NOR THE INFORMATION IT CONTAINS MAY BE USED BY OR DISCLOSED TO ANY THIRD PARTY WITHOUT PRIOR WRITTEN CONSENT OF COMPAL ELECTRONICS, INC.

Compal Electronics, Inc.

Title: PWR +1.05VS_VCCPP/+0.75VSP

Size: Custom | Document Number: C38 Chief River Schematic | Rev: 1.0

Date: Thursday, October 04, 2012 | Sheet 46 of 50

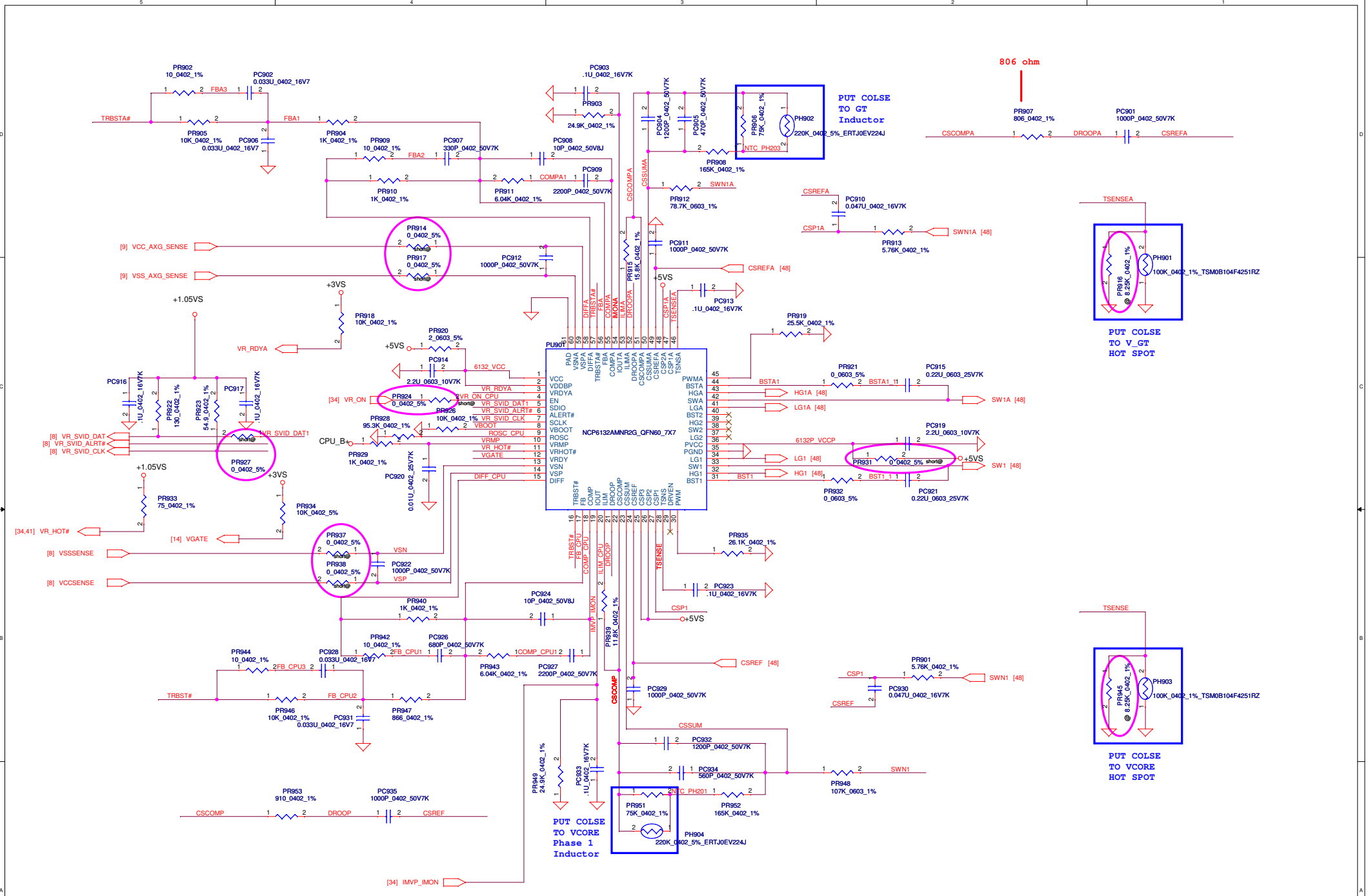

AMY WEN

Security Classification	Compal Secret Data		
Issued Date	2009/12/01	Deciphered Date	2010/12/31

THIS SHEET OF ENGINEERING DRAWING IS THE PROPRIETARY PROPERTY OF COMPAL ELECTRONICS, INC. AND CONTAINS CONFIDENTIAL AND TRADE SECRET INFORMATION. THIS SHEET MAY NOT BE TRANSFERED FROM THE CUSTODY OF THE COMPETENT DIVISION OF R&D DEPARTMENT EXCEPT AS AUTHORIZED BY COMPAL ELECTRONICS, INC. NEITHER THIS SHEET NOR THE INFORMATION IT CONTAINS MAY BE USED BY OR DISCLOSED TO ANY THIRD PARTY WITHOUT PRIOR WRITTEN CONSENT OF COMPAL ELECTRONICS, INC.

Compal Electronics, Inc.

Title: **PWR-CPU_CORE**

Size: Custom | Document Number: C38 Chief River Schematic | Rev: 1.0

Date: Thursday, October 04, 2012 | Sheet 47 of 50

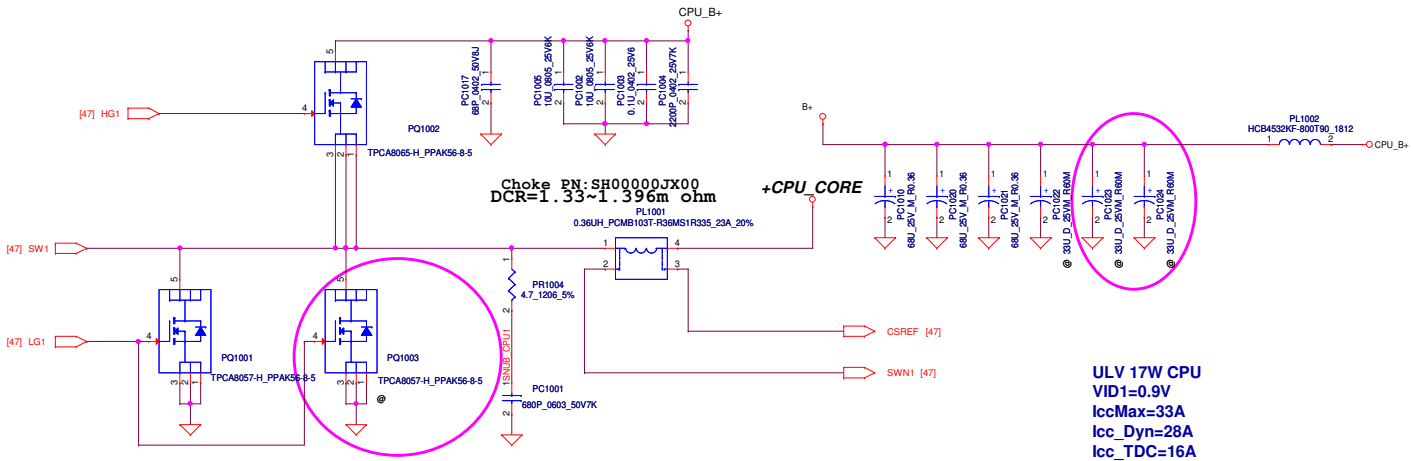

ULV 17W CPU
VID1=0.9V
IccMax=33A
Icc_Dyn=28A
Icc_TDC=16A
R_LL=2.9m ohm

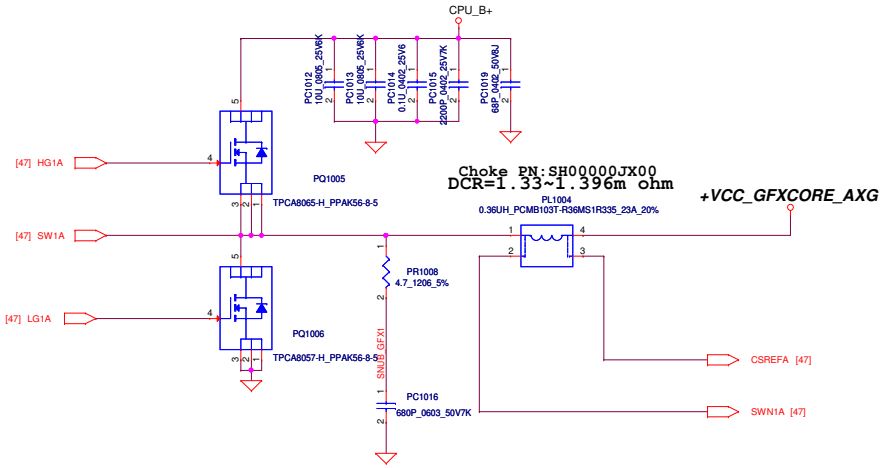

ULV GT2
VID1=1.23V
IccMax=33A
Icc_Dyn=20.2A
Icc_TDC=21.5A
R_LL=3.9m ohm

AMY WEN

Security Classification	Compal Secret Data		
Issued Date	2009/12/01	Deciphered Date	2010/12/31

THIS SHEET OF ENGINEERING DRAWING IS THE PROPRIETARY PROPERTY OF COMPAL ELECTRONICS, INC. AND CONTAINS CONFIDENTIAL AND TRADE SECRET INFORMATION. THIS SHEET MAY NOT BE TRANSFERED FROM THE CUSTODY OF THE COMPETENT DIVISION OF R&D DEPARTMENT EXCEPT AS AUTHORIZED BY COMPAL ELECTRONICS, INC. NEITHER THIS SHEET NOR THE INFORMATION IT CONTAINS MAY BE USED BY OR DISCLOSED TO ANY THIRD PARTY WITHOUT PRIOR WRITTEN CONSENT OF COMPAL ELECTRONICS, INC.

Compal Electronics, Inc.

Title: ***PWR-CPU_CORE***

Size: Custom | Document Number: C38 Chief River Schematic | Rev: 1.0

Date: Thursday, October 04, 2012 | Sheet 48 of 50

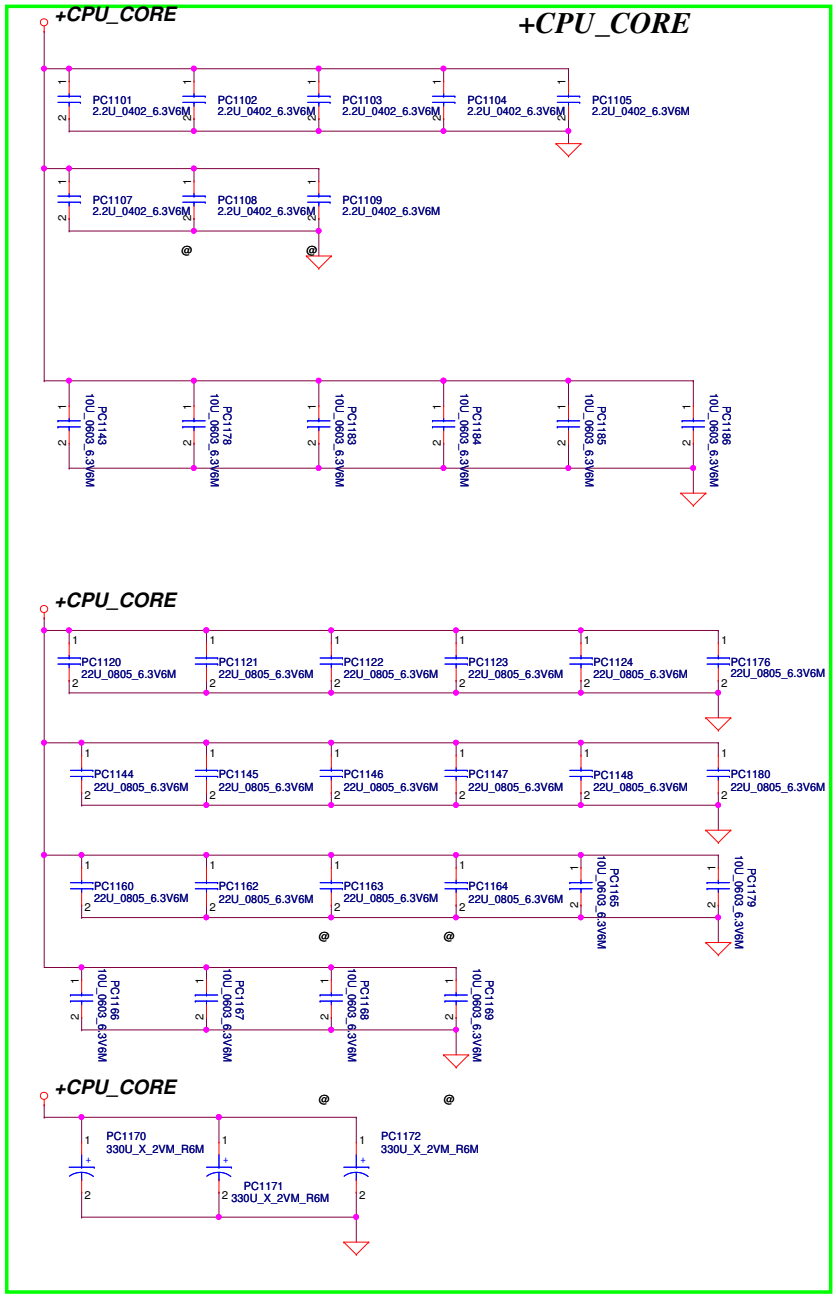

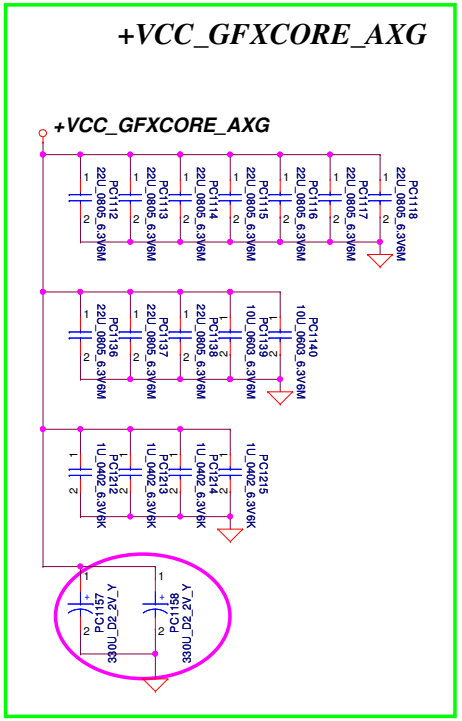

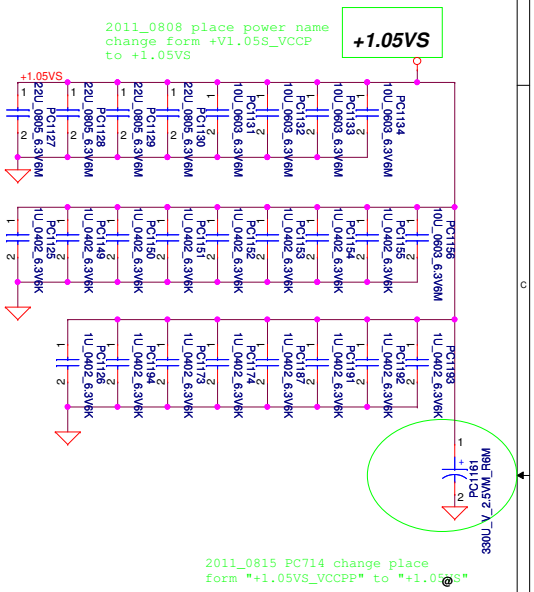

AMY WEN

Security Classification	Compal Secret Data		
Issued Date	2008/09/15	Deciphered Date	2009/09/15

THIS SHEET OF ENGINEERING DRAWING IS THE PROPRIETARY PROPERTY OF COMPAL ELECTRONICS, INC. AND CONTAINS CONFIDENTIAL AND TRADE SECRET INFORMATION. THIS SHEET MAY NOT BE TRANSFERED FROM THE CUSTODY OF THE COMPETENT DIVISION OF R&D DEPARTMENT EXCEPT AS AUTHORIZED BY COMPAL ELECTRONICS, INC. NEITHER THIS SHEET NOR THE INFORMATION IT CONTAINS MAY BE USED BY OR DISCLOSED TO ANY THIRD PARTY WITHOUT PRIOR WRITTEN CONSENT OF COMPAL ELECTRONICS, INC.

Compal Electronics, Inc.

Title: **PWR - PROCESSOR DECOUPLING**

Size | Document Number: *LA-8261P_SDV* | Rev: 1.0

Date: Thursday, October 04, 2012 | Sheet 49 of 50

Version change list (P.I.R. List)

for PWR

Item	Reason for change	PG#	Modify List	Date	Phase
1	NCP6132A update SPEC	P47	Remove PR916, PR945	2012/06/05	
2	Thermal verfy PH1 setting point	P41	Change PR208 value to 18.2K	2012/06/08	
3	ME demand : Keyboard assembly issue	P44	Change PL401, PL402 to High=2.4mm (SH00000H200)	2012/06/08	
4	Noise is PASS, Don't need 33u CAP	P48	Remove PC1023, PC1024	2012/06/08	
5					
6					
7					
8					
9					
10					
11					
12					
13					
14					
15					
16					
17					

AMY WEN

THIS SHEET OF ENGINEERING DRAWING IS THE PROPRIETARY PROPERTY OF COMPAL ELECTRONICS, INC. AND CONTAINS CONFIDENTIAL AND TRADE SECRET INFORMATION. THIS SHEET MAY NOT BE TRANSFERED FROM THE CUSTODY OF THE COMPETENT DIVISION OF R&D DEPARTMENT EXCEPT AS AUTHORIZED BY COMPAL ELECTRONICS, INC. NEITHER THIS SHEET NOR THE INFORMATION IT CONTAINS MAY BE USED BY OR DISCLOSED TO ANY THIRD PARTY WITHOUT PRIOR WRITTEN CONSENT OF COMPAL ELECTRONICS, INC.

Security Classification	Compal Secret Data		
Issued Date	2009/01/06	Deciphered Date	2009/01/06

Compal Electronics, Inc.

Title: PIR (PWR)

Size: Custom | Document Number: C38 Chief River Schematic | Rev: 1.0

Date: Thursday, October 04, 2012 | Sheet 50 of 50