COMPAL CONFIDENTIAL

MODEL NAME : *JAL20*

PCB NO : *LA-4041P (DA800009Y1L)*

BOM NO : *43153231L01(TPM)*

43153231L02 (Non TPM)

M09 Maybach UMA

uFCPGA Mobile Penryn
Intel Cantiga GM + ICH9M

http://hobi-elektronika.net/

2008-06-16

REV : 1.0(A00)

@ : Nopop Component
3@ : disable TPM
4@ : enable TPM

Fix Function Field

MB PCB

Part Number	Description
DA800009Y1L	PCB 03N LA-4041P REV1 M/B

PROPRIETARY NOTE: THIS SHEET OF ENGINEERING DRAWING AND SPECIFICATIONS CONTAINS CONFIDENTIAL TRADE SECRET AND OTHER PROPRIETARY INFORMATION OF DELL INC. ("DELL") THIS DOCUMENT MAY NOT BE TRANSFERRED OR COPIED WITHOUT THE EXPRESS WRITTEN AUTHORIZATION OF DELL. IN ADDITION, NEITHER THIS SHEET NOR THE INFORMATION IT CONTAINS WAY BE USED BY OR DISCLOSED TO ANY THIRD PARTY WITHOUT DELL'S EXPRESS WRITTEN CONSENT.

DELL CONFIDENTIAL/PROPRIETARY

Compal Electronics, Inc.

Title: Cover Sheet		
Size	Document Number: LA-4041P	Rev 1.0
Date: Monday, June 16, 2008	Sheet 1 of 56	

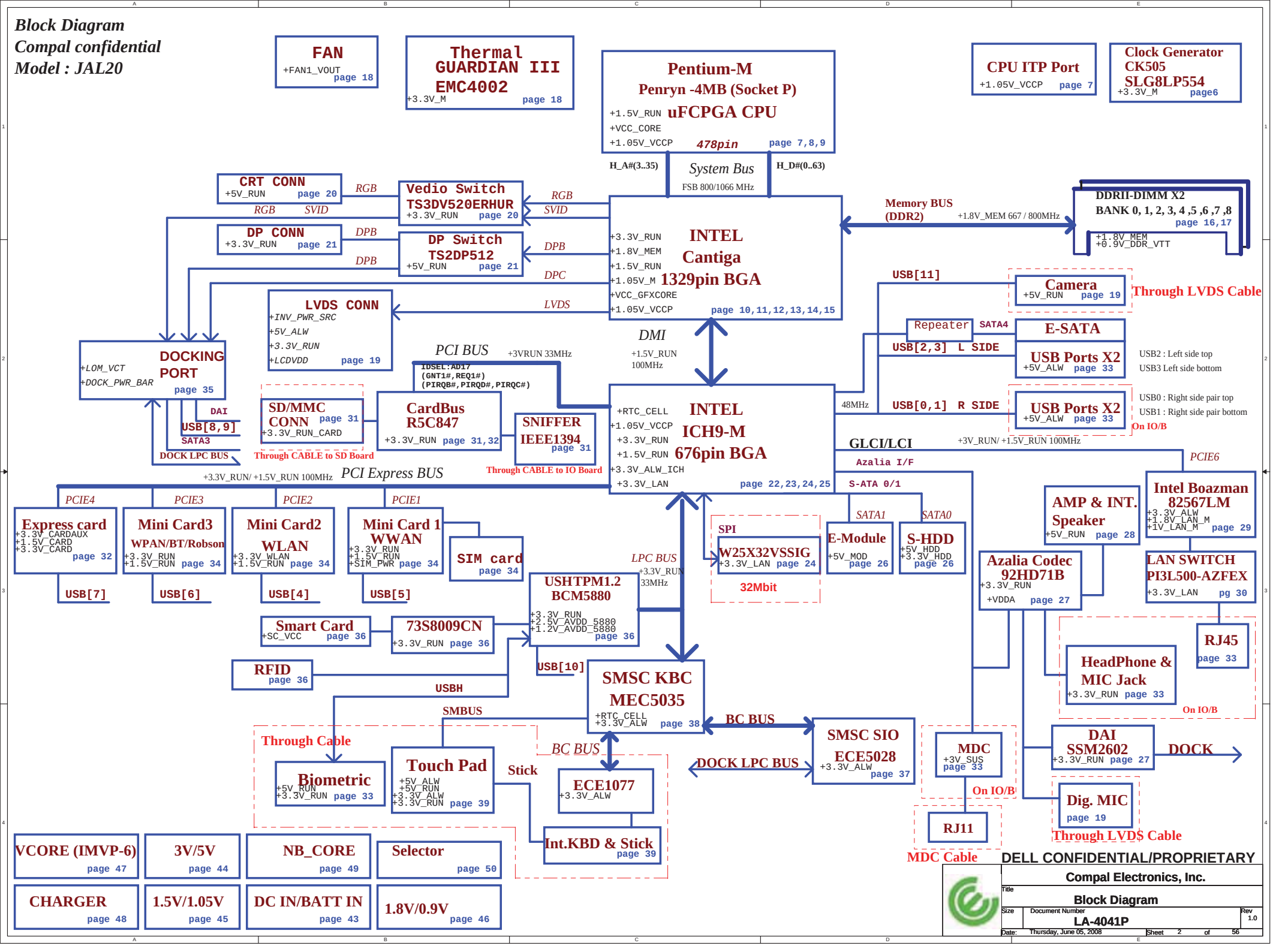
Block Diagram
Compal confidential
Model : JAL20
FAN
+FAN1_VOUT
page 18
Thermal GUARDIAN III EMC4002
+3.3V_M
page 18
Pentium-M
Penryn -4MB (Socket P)
uFCPGA CPU
+1.5V_RUN
+VCC_CORE
+1.05V_VCCP
478pin
page 7,8,9
CPU ITP Port
+1.05V_VCCP
page 7
Clock Generator
CK505
SLG8LP554
+3.3V_M
page6
H_A#(3..35)
System Bus
FSB 800/1066 MHz
H_D#(0..63)
CRT CONN
+5V_RUN
page 20
RGB
Vedio Switch
TS3DV520ERHUR
+3.3V_RUN
page 20
RGB
SVID
DP CONN
+3.3V_RUN
page 21
DPB
DP Switch
TS2DP512
+5V_RUN
page 21
DPB
DPC
LVDS
LVDS CONN
+INV_PWR_SRC
+5V_ALW
+3.3V_RUN
+LCDVDD
page 19
INTEL
Cantiga
1329pin BGA
+3.3V_RUN
+1.8V_MEM
+1.5V_RUN
+1.05V_M
+VCC_GFXCORE
+1.05V_VCCP
page 10,11,12,13,14,15
Memory BUS
(DDR2)
+1.8V_MEM 667 / 800MHz
DDRII-DIMM X2
BANK 0, 1, 2, 3, 4 ,5 ,6 ,7 ,8
page 16,17
+1.8V_MEM
+0.9V_DDR_VTT
USB[11]
Camera
+5V_RUN
page 19
Through LVDS Cable
Repeater
SATA4
E-SATA
USB[2,3] L SIDE
USB Ports X2
+5V_ALW
page 33
USB2 : Left side top
USB3 Left side bottom
USB[0,1] R SIDE
USB Ports X2
+5V_ALW
page 33
USB0 : Right side pair top
USB1 : Right side pair bottom
On IO/B
DMI
+1.5V_RUN
100MHz
PCI BUS
+3VRUN 33MHz
IDSEL:AD17
(GNT1#,REQ1#)
(PIRQB#,PIRQD#,PIRQC#)
DOCKING PORT
+LOM_VCT
+DOCK_PWR_BAR
page 35
DAI
USB[8,9]
SATA3
DOCK LPC BUS
SD/MMC CONN
page 31
+3.3V_RUN_CARD
Through CABLE to SD Board
CardBus
R5C847
+3.3V_RUN
page 31,32
SNIFFER
IEEE1394
page 31
Through CABLE to IO Board
INTEL
ICH9-M
676pin BGA
+RTC_CELL
+1.05V_VCCP
+3.3V_RUN
+1.5V_RUN
+3.3V_ALW_ICH
+3.3V_LAN
page 22,23,24,25
48MHz
GLCI/LCI
+3V_RUN/ +1.5V_RUN 100MHz
Azalia I/F
S-ATA 0/1
PCIE6
+3.3V_RUN/ +1.5V_RUN 100MHz
PCI Express BUS
PCIE4
PCIE3
PCIE2
PCIE1
Express card
+3.3V_CARDAUX
+1.5V_CARD
+3.3V_CARD
page 32
USB[7]
Mini Card3
WPAN/BT/Robson
+3.3V_RUN
+1.5V_RUN
page 34
USB[6]
Mini Card2
WLAN
+3.3V_WLAN
+1.5V_RUN
page 34
USB[4]
Mini Card 1
WWAN
+3.3V_RUN
+1.5V_RUN
+SIM_PWR
page 34
USB[5]
SIM card
page 34
LPC BUS
+3.3V_RUN
33MHz
USHTPM1.2
BCM5880
+3.3V_RUN
+2.5V_AVDD_5880
+1.2V_AVDD_5880
page 36
USB[10]
SPI
W25X32VSSIG
+3.3V_LAN
page 24
32Mbit
SATA1
E-Module
+5V_MOD
page 26
SATA0
S-HDD
+5V_HDD
+3.3V_HDD
page 26
AMP & INT. Speaker
+5V_RUN
page 28
Intel Boazman
82567LM
+3.3V_ALW
+1.8V_LAN_M
+1V_LAN_M
page 29
Azalia Codec
92HD71B
+3.3V_RUN
+VDDA
page 27
LAN SWITCH
PI3L500-AZFEX
+3.3V_LAN
pg 30
RJ45
page 33
HeadPhone & MIC Jack
+3.3V_RUN
page 33
On IO/B
Smart Card
+SC_VCC
page 36
73S8009CN
+3.3V_RUN
page 36
RFID
page 36
USBH
SMSC KBC
MEC5035
+RTC_CELL
+3.3V_ALW
page 38
SMBUS
BC BUS
SMSC SIO
ECE5028
+3.3V_ALW
page 37
DOCK LPC BUS
MDC
+3V_SUS
page 33
On IO/B
DAI
SSM2602
+3.3V_RUN
page 27
DOCK
Through Cable
Biometric
+5V_RUN
+3.3V_RUN
page 33
Touch Pad
+5V_ALW
+5V_RUN
+3.3V_ALW
+3.3V_RUN
page 39
Stick
BC BUS
ECE1077
+3.3V_ALW
Int.KBD & Stick
page 39
Dig. MIC
page 19
Through LVDS Cable
RJ11
MDC Cable
VCORE (IMVP-6)
page 47
3V/5V
page 44
NB_CORE
page 49
Selector
page 50
CHARGER
page 48
1.5V/1.05V
page 45
DC IN/BATT IN
page 43
1.8V/0.9V
page 46
DELL CONFIDENTIAL/PROPRIETARY
Compal Electronics, Inc.
Title
Block Diagram
Size
Document Number
LA-4041P
Rev
1.0
Date: Thursday, June 05, 2008
Sheet 2 of 56

POWER STATES

State \ Signal	SLP S3#	SLP S4#	SLP S5#	S4 STATE#	SLP M#	ALWAYS PLANE	M PLANE	SUS PLANE	RUN PLANE	CLOCKS
S0 (Full ON) / M0	HIGH	HIGH	HIGH	HIGH	HIGH	ON	ON	ON	ON	ON
S3 (Suspend to RAM) / M1	LOW	HIGH	HIGH	HIGH	HIGH	ON	ON	ON	OFF	ON
S4 (Suspend to DISK) / M1	LOW	HIGH	HIGH	LOW	HIGH	ON	ON	ON	OFF	ON
S5 (SOFT OFF) / M1	LOW	HIGH	LOW	LOW	HIGH	ON	ON	ON	OFF	ON
S3 (Suspend to RAM) / M-OFF	LOW	HIGH	HIGH	HIGH	LOW	ON	OFF	ON	OFF	OFF
S4 (Suspend to DISK) / M-OFF	LOW	LOW	HIGH	LOW	LOW	ON	OFF	OFF	OFF	OFF
S5 (SOFT OFF) / M-OFF	LOW	LOW	LOW	LOW	LOW	ON	OFF	OFF	OFF	OFF

PM TABLE

State \ power plane	+15V_ALW +5V_ALW +3.3V_ALW_ICH +3.3V_RTC_LDO	+3.3V_SUS +1.8V_MEM	+5V_RUN +3.3V_RUN +2.5V_RUN +1.5V_RUN +0.9V_DDR_VTT +VCC_GFXCORE +VCC_CORE +1.05V_VCCP	+3.3V_M +1.05V_M	+3.3V_M +1.05V_M (M-OFF)
S0	ON	ON	ON	ON	ON
S3	ON	ON	OFF	ON	OFF
S5 S4/AC	ON	OFF	OFF	ON	OFF
S5 S4/AC don't exist	OFF	OFF	OFF	OFF	OFF

PCI TABLE

PCI DEVICE	IDSEL	REQ#/GNT#	PIRQ
R5C847	AD17	REQ#1 / GNT#1	PIRQ[B..D]

	USB PORT#	DESTINATION
ICH9-M	0	JUSB1 (Ext Right Side Top)
	1	JUSB1 (Ext Right Side Bottom)
	2	JESA1 (Ext Left Side Top)
	3	JESA1 (Ext Left Side Bottom)
	4	WLAN
	5	WWAN
	6	WPAN
	7	Card Bus/Express card
	8	DOCKING
	9	DOCKING
	10	USH->BIO
	11	Camera

http://hobi-elektronika.net/

PCI EXPRESS	DESTINATION
Lane 1	MINI CARD-1 WWAN
Lane 2	MINI CARD-2 WLAN
Lane 3	MINI CARD-3 BT/UWB
Lane 4	EXPRESS CARD
Lane 5	None
Lane 6	10/100/1G LAN

PROPRIETARY NOTE: THIS SHEET OF ENGINEERING DRAWING AND SPECIFICATIONS CONTAINS CONFIDENTIAL TRADE SECRET AND OTHER PROPRIETARY INFORMATION OF DELL INC. ("DELL") THIS DOCUMENT MAY NOT BE TRANSFERRED OR COPIED WITHOUT THE EXPRESS WRITTEN AUTHORIZATION OF DELL. IN ADDITION, NEITHER THIS SHEET NOR THE INFORMATION IT CONTAINS WAY BE USED BY OR DISCLOSED TO ANY THIRD PARTY WITHOUT DELL'S EXPRESS WRITTEN CONSENT.

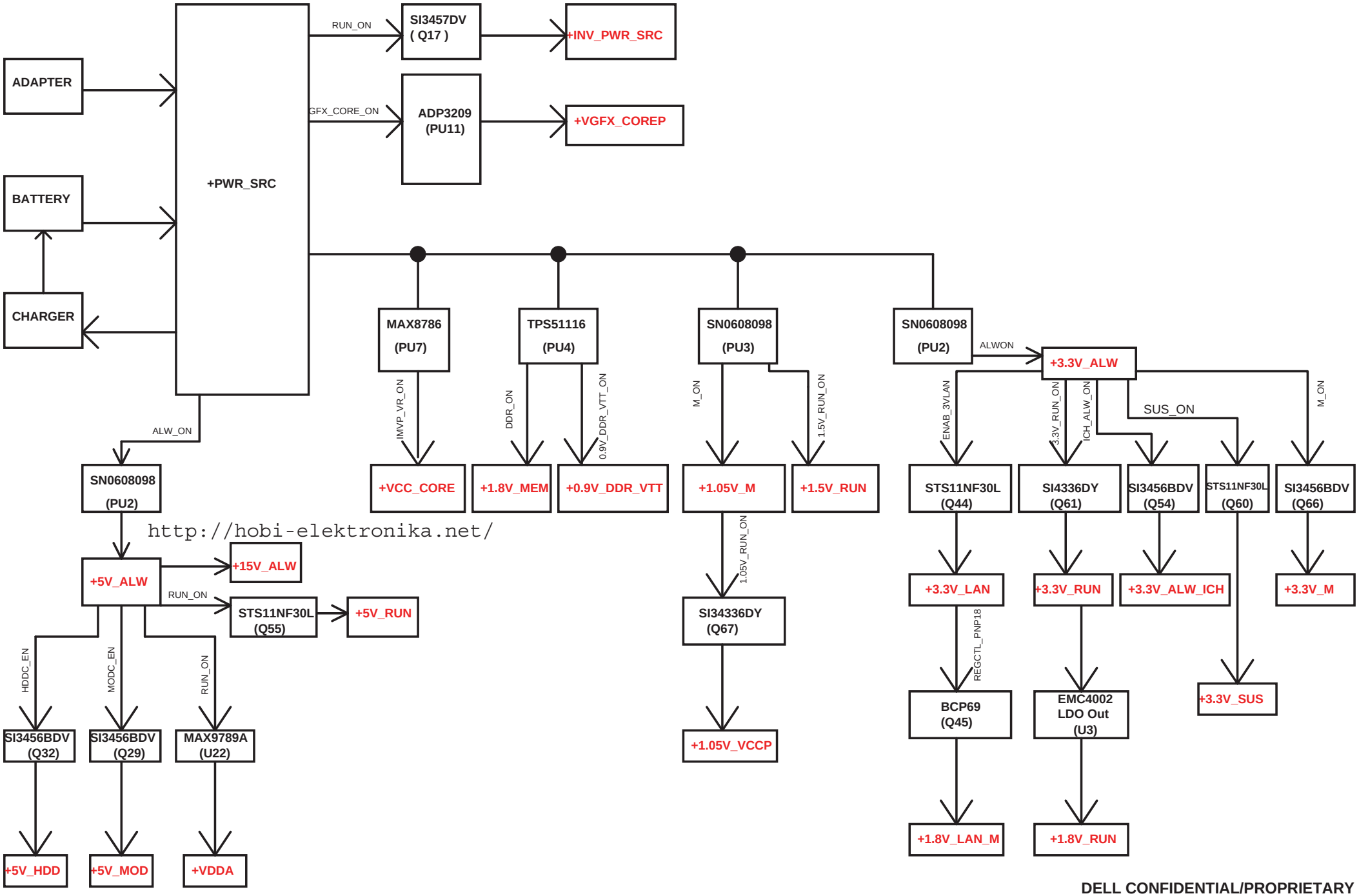

DELL CONFIDENTIAL/PROPRIETARY

PROPRIETARY NOTE: THIS SHEET OF ENGINEERING DRAWING AND SPECIFICATIONS CONTAINS CONFIDENTIAL TRADE SECRET AND OTHER PROPRIETARY INFORMATION OF DELL INC. ("DELL") THIS DOCUMENT MAY NOT BE TRANSFERRED OR COPIED WITHOUT THE EXPRESS WRITTEN AUTHORIZATION OF DELL. IN ADDITION, NEITHER THIS SHEET NOR THE INFORMATION IT CONTAINS WAY BE USED BY OR DISCLOSED TO ANY THIRD PARTY WITHOUT DELL'S EXPRESS WRITTEN CONSENT.

Compal Electronics, Inc.	
Title	Power Rail
Size / Document Number	LA-4041P
Rev	1.0
Date: Thursday, June 05, 2008	Sheet 4 of 56

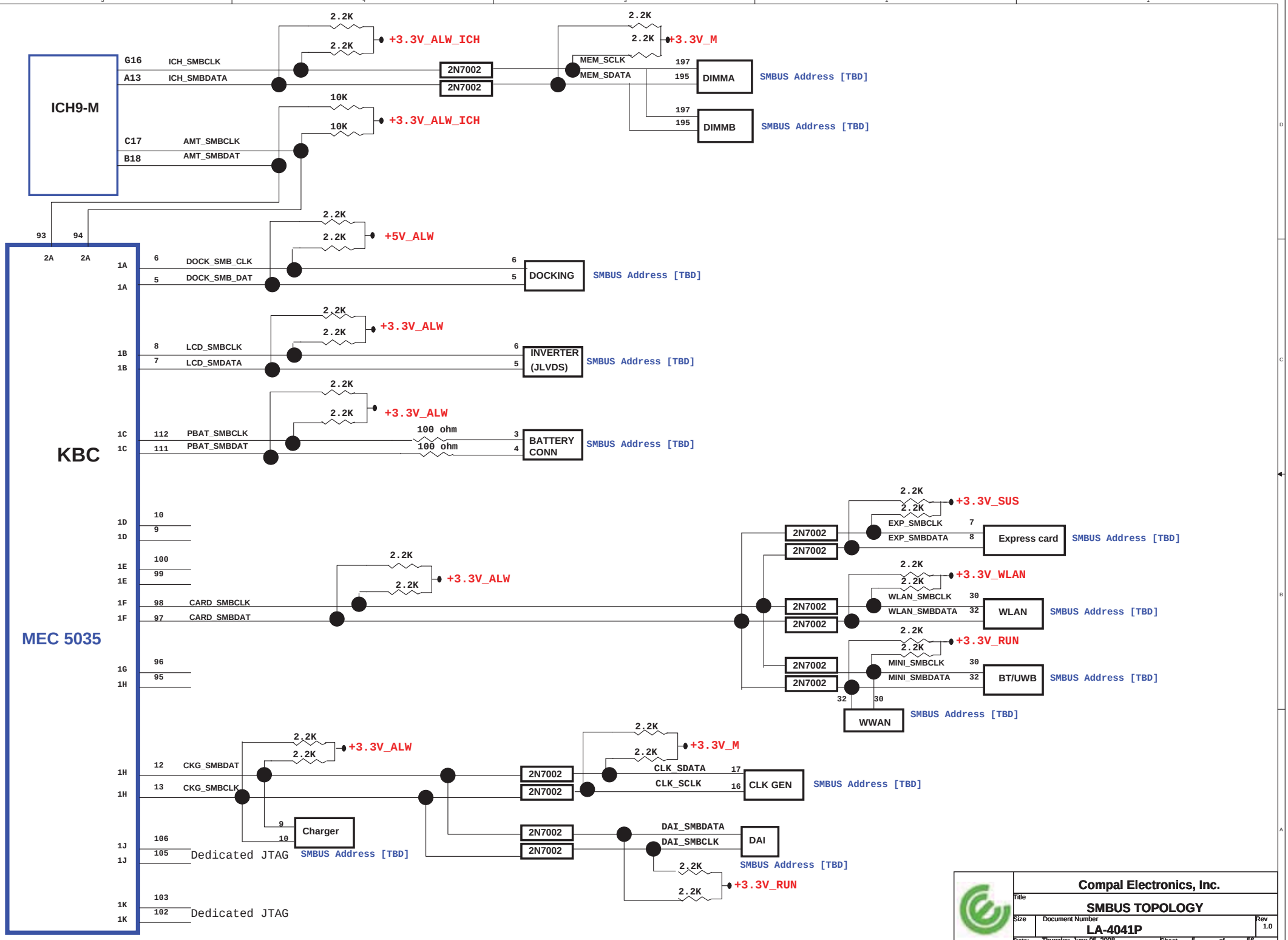

Compal Electronics, Inc.	
Title	SMBUS TOPOLOGY
Size / Document Number	LA-4041P
Rev	1.0
Date: Thursday, June 05, 2008	Sheet 5 of 56

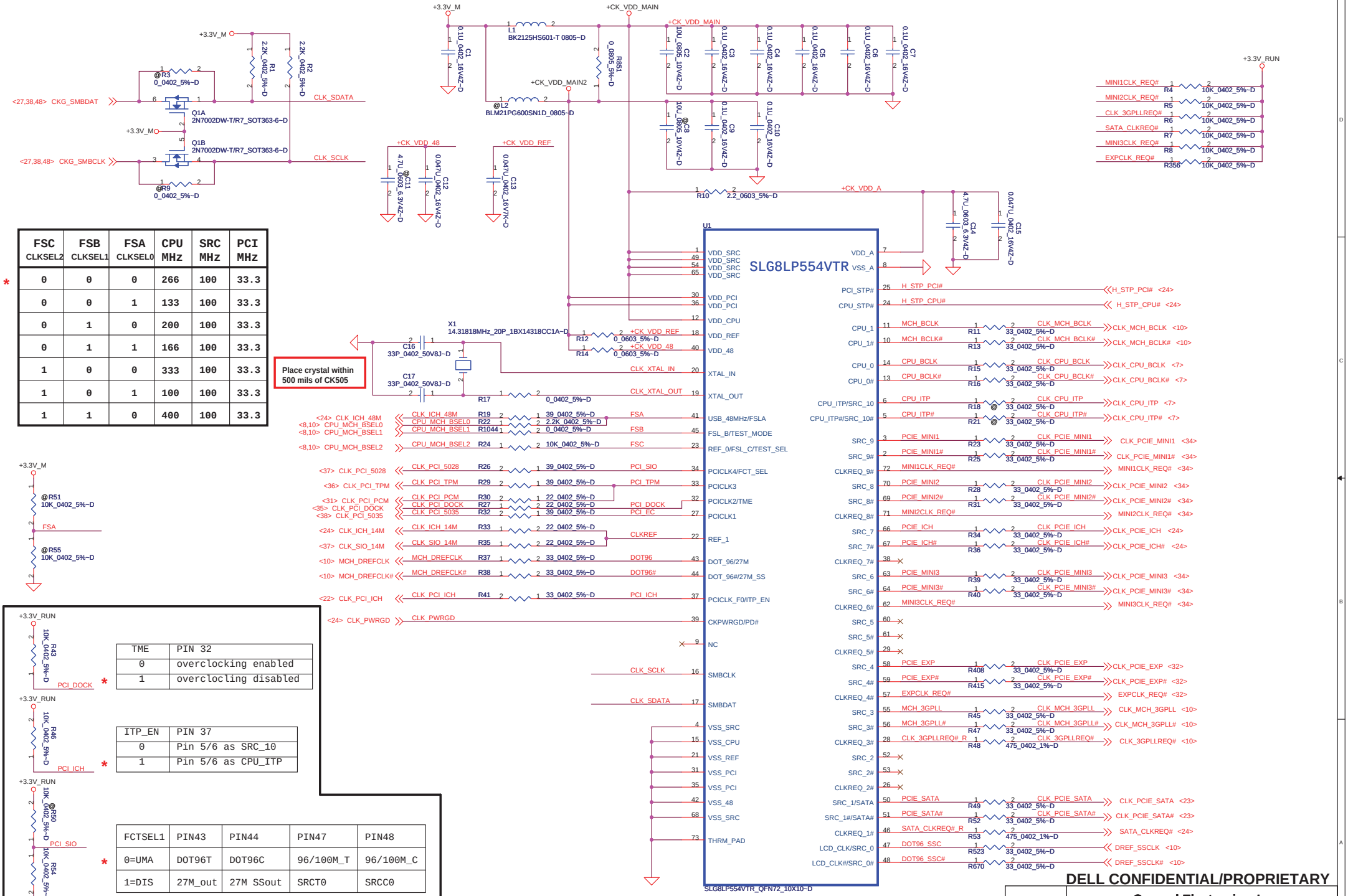

FSC CLKSEL2	FSB CLKSEL1	FSA CLKSEL0	CPU MHz	SRC MHz	PCI MHz
* 0	0	0	266	100	33.3
0	0	1	133	100	33.3
0	1	0	200	100	33.3
0	1	1	166	100	33.3
1	0	0	333	100	33.3
1	0	1	100	100	33.3
1	1	0	400	100	33.3

TME	PIN 32
0	overclocking enabled
* 1	overclocling disabled

ITP_EN	PIN 37
0	Pin 5/6 as SRC_10
* 1	Pin 5/6 as CPU_ITP

FCTSEL1	PIN43	PIN44	PIN47	PIN48
* 0=UMA	DOT96T	DOT96C	96/100M_T	96/100M_C
1=DIS	27M_out	27M SSout	SRCT0	SRCC0

0=UMA
1=Disc. GRFX down

PROPRIETARY NOTE: THIS SHEET OF ENGINEERING DRAWING AND SPECIFICATIONS CONTAINS CONFIDENTIAL TRADE SECRET AND OTHER PROPRIETARY INFORMATION OF DELL INC. ("DELL") THIS DOCUMENT MAY NOT BE TRANSFERRED OR COPIED WITHOUT THE EXPRESS WRITTEN AUTHORIZATION OF DELL. IN ADDITION, NEITHER THIS SHEET NOR THE INFORMATION IT CONTAINS WAY BE USED BY OR DISCLOSED TO ANY THIRD PARTY WITHOUT DELL'S EXPRESS WRITTEN CONSENT.

DELL CONFIDENTIAL/PROPRIETARY

Compal Electronics, Inc.

Title: Clock Generator

Size: | Document Number: LA-4041P | Rev: 1.0

Date: Friday, June 13, 2008 | Sheet 6 of 56

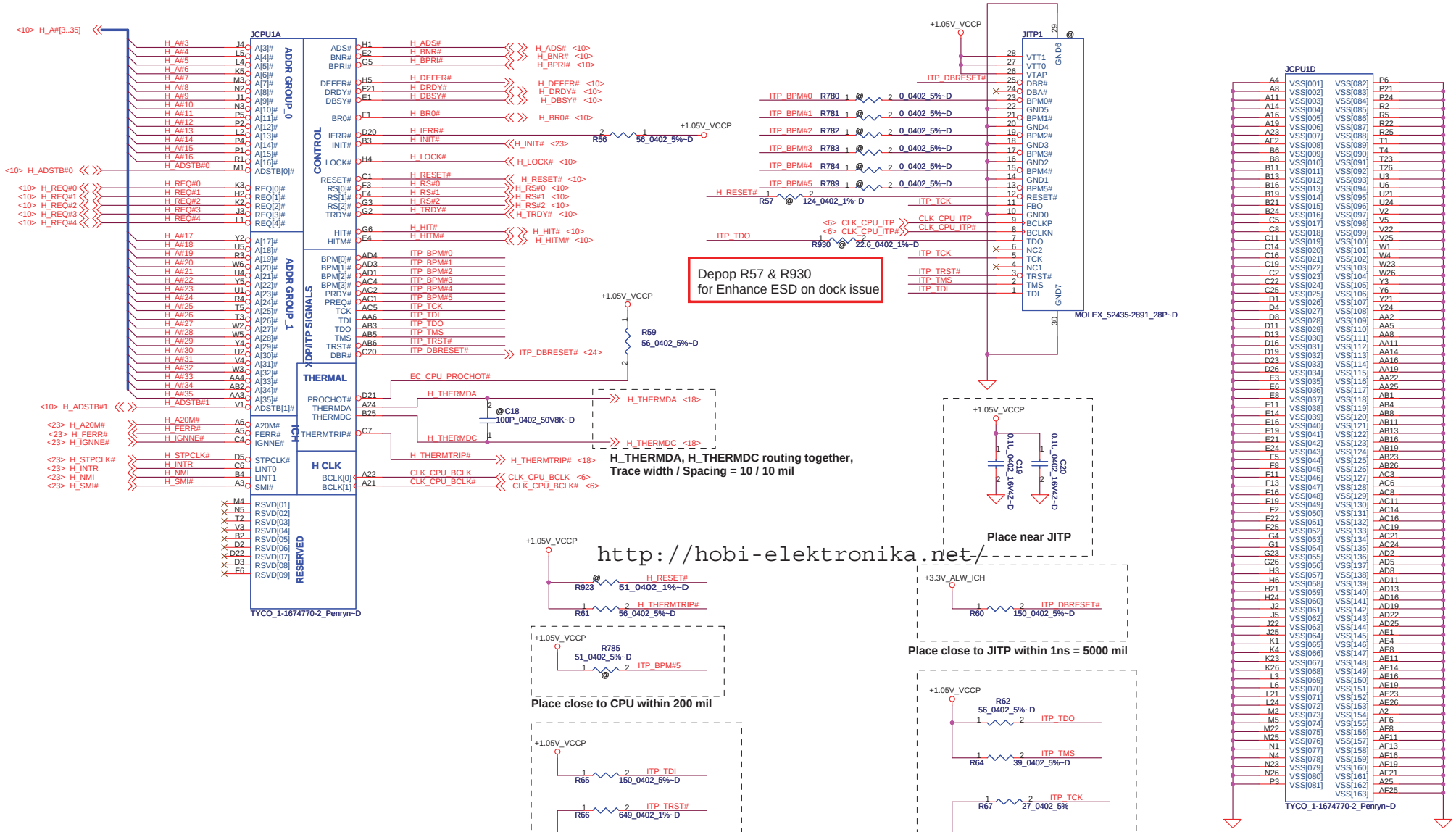

Depop R57 & R930
for Enhance ESD on dock issue

http://hobi-elektronika.net/

PROPRIETARY NOTE: THIS SHEET OF ENGINEERING DRAWING AND SPECIFICATIONS CONTAINS CONFIDENTIAL TRADE SECRET AND OTHER PROPRIETARY INFORMATION OF DELL INC. ("DELL") THIS DOCUMENT MAY NOT BE TRANSFERRED OR COPIED WITHOUT THE EXPRESS WRITTEN AUTHORIZATION OF DELL. IN ADDITION, NEITHER THIS SHEET NOR THE INFORMATION IT CONTAINS WAY BE USED BY OR DISCLOSED TO ANY THIRD PARTY WITHOUT DELL'S EXPRESS WRITTEN CONSENT.

DELL CONFIDENTIAL/PROPRIETARY

Compal Electronics, Inc.

Title: Penryn Processor(1/2)

Size | Document Number: LA-4041P | Rev: 1.0

Date: Friday, June 13, 2008 | Sheet 7 of 56

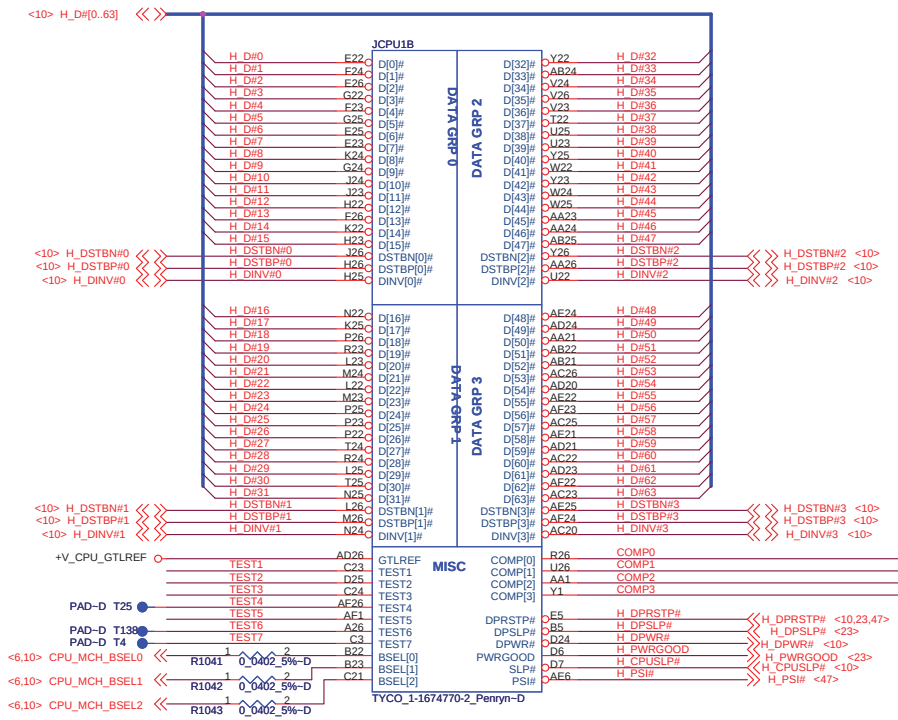

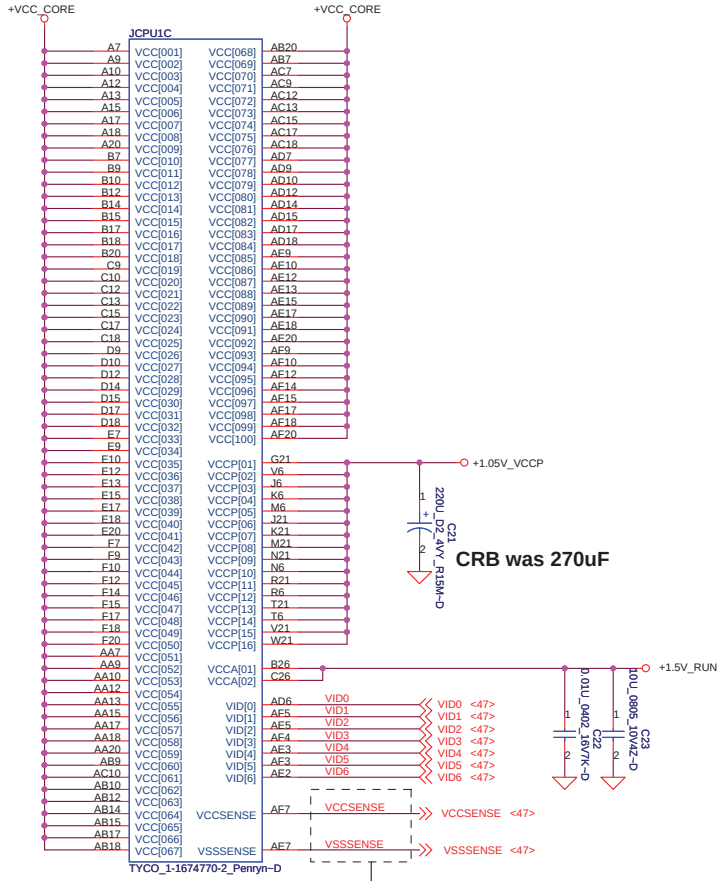

Length match within 25 mils, Z0=27.4 ohm

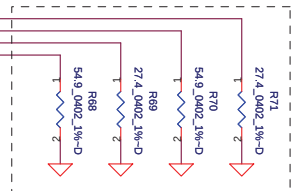

Resistor placed within 0.5" of CPU pin.Trace should be at least 25 mils away from any other toggling signal. COMP0, COMP2 trace should be 27.4 ohm. COMP1, COMP3 should be 55 ohm.

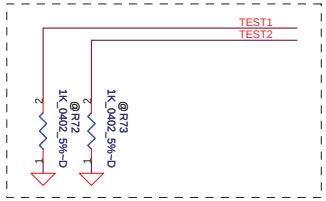

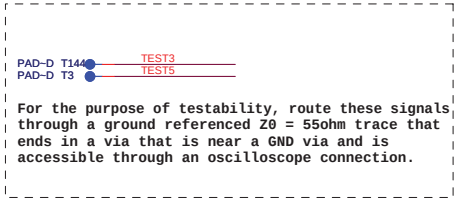

For the purpose of testability, route these signals through a ground referenced Z0 = 55ohm trace that ends in a via that is near a GND via and is accessible through an oscilloscope connection.

http://hobi-elektronika.net/

Place R75 and R76 near CPU

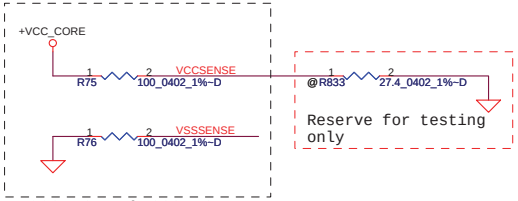

Route VCCSENSE and VSSSENSE trace at 27.4 ohms, 7 mils spacing and the placement should be within 1 inch (max)

FSB	BCLK	BSEL2	BSEL1	BSEL0
533	133	0	0	1
667	166	0	1	1
800	200	0	1	0
1067	266	0	0	0

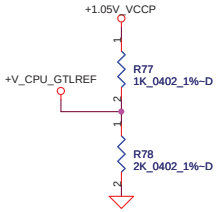

Layout close CPU PIN AD26 55 ohm, 0.5 inch (max)

PROPRIETARY NOTE: THIS SHEET OF ENGINEERING DRAWING AND SPECIFICATIONS CONTAINS CONFIDENTIAL TRADE SECRET AND OTHER PROPRIETARY INFORMATION OF DELL INC. ("DELL") THIS DOCUMENT MAY NOT BE TRANSFERRED OR COPIED WITHOUT THE EXPRESS WRITTEN AUTHORIZATION OF DELL. IN ADDITION, NEITHER THIS SHEET NOR THE INFORMATION IT CONTAINS WAY BE USED BY OR DISCLOSED TO ANY THIRD PARTY WITHOUT DELL'S EXPRESS WRITTEN CONSENT.

DELL CONFIDENTIAL/PROPRIETARY

Compal Electronics, Inc.

Title: Penryn Processor(2/2)

Size: | Document Number: LA-4041P | Rev: 1.0

Date: Friday, June 13, 2008 | Sheet 8 of 56

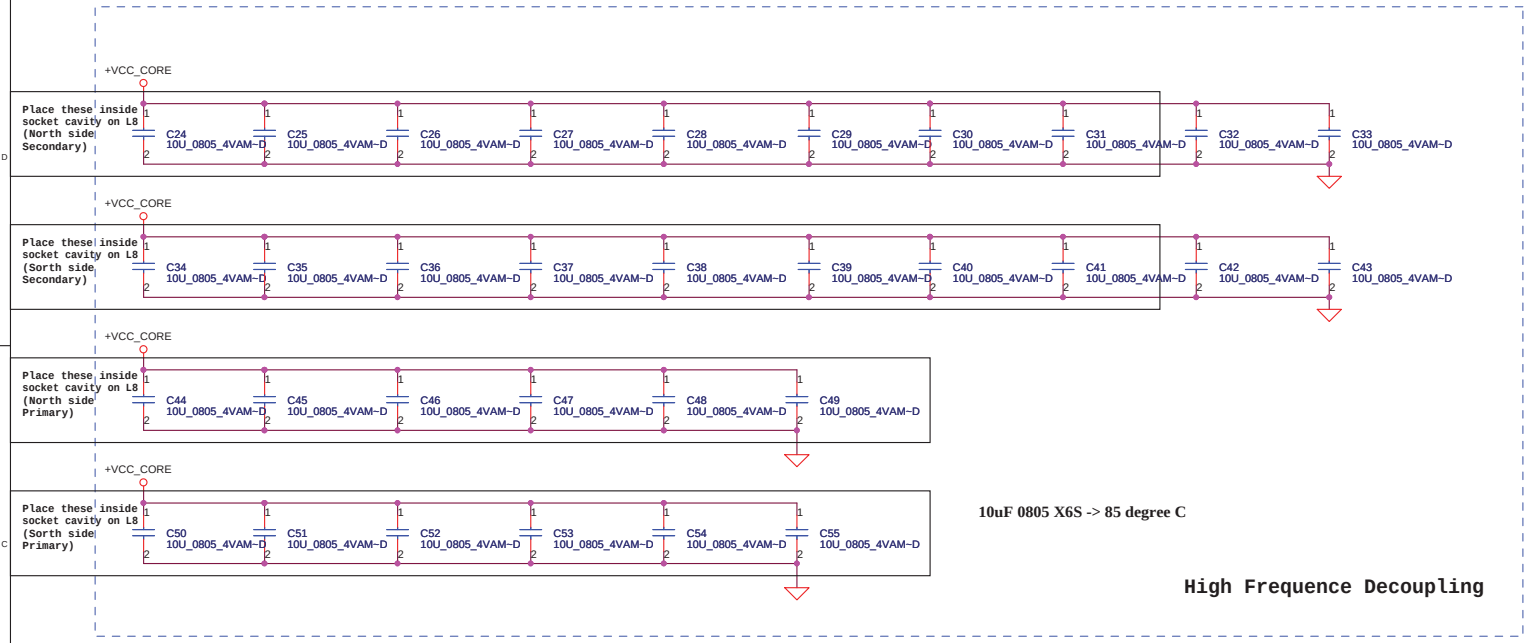

10uF 0805 X6S -> 85 degree C

High Frequence Decoupling

Near VCORE regulator.

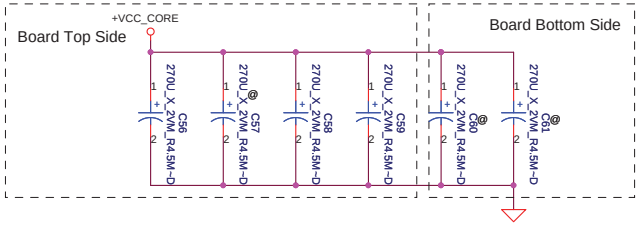

ESR <= 1.5m ohm
Capacitor > 1320uF

http://hobi-elektronika.net/

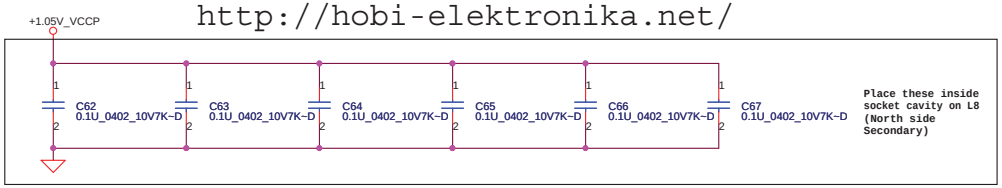

PROPRIETARY NOTE: THIS SHEET OF ENGINEERING DRAWING AND SPECIFICATIONS CONTAINS CONFIDENTIAL TRADE SECRET AND OTHER PROPRIETARY INFORMATION OF DELL INC. ("DELL") THIS DOCUMENT MAY NOT BE TRANSFERRED OR COPIED WITHOUT THE EXPRESS WRITTEN AUTHORIZATION OF DELL. IN ADDITION, NEITHER THIS SHEET NOR THE INFORMATION IT CONTAINS WAY BE USED BY OR DISCLOSED TO ANY THIRD PARTY WITHOUT DELL'S EXPRESS WRITTEN CONSENT.

DELL CONFIDENTIAL/PROPRIETARY

Compal Electronics, Inc.		
Title: CPU Bypass		
Size	Document Number: LA-4041P	Rev 1.0
Date: Thursday, June 05, 2008	Sheet 9 of 56	

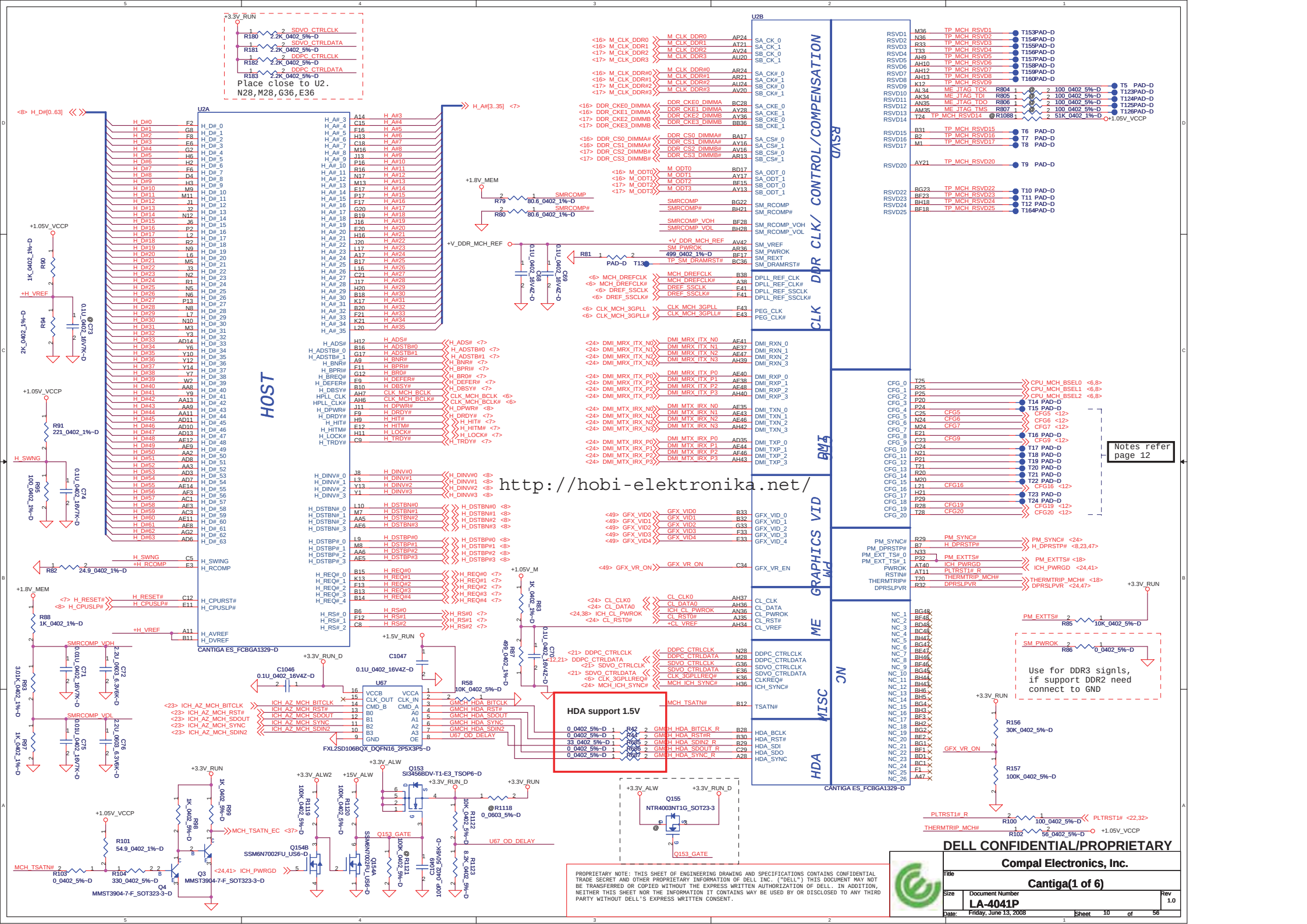
HOST
U2A
CANTIGA ES_FCBGA1329~D
U2B
RSVD
DDR CLK/ CONTROL/COMPENSATION
CLK
DMI
GRAPHICS VID
PM
ME
MISC
NC
HDA
U67
FXL2SD106BQX_DQFN16_2P5X3P5~D
Q153
SI3456BDV-T1-E3_TSOP6~D
Q155
NTR4003NT1G_SOT23-3
Q154B
SSM6N7002FU_US6~D
Q153_GATE
Q3
MMST3904-7-F_SOT323-3~D
Q4
MMST3904-7-F_SOT323-3~D
HDA support 1.5V
Place close to U2.
N28,M28,G36,E36
Notes refer page 12
Use for DDR3 signls, if support DDR2 need connect to GND
http://hobi-elektronika.net/
DELL CONFIDENTIAL/PROPRIETARY
Compal Electronics, Inc.
Cantiga(1 of 6)
LA-4041P
Rev 1.0
Friday, June 13, 2008
Sheet 10 of 56

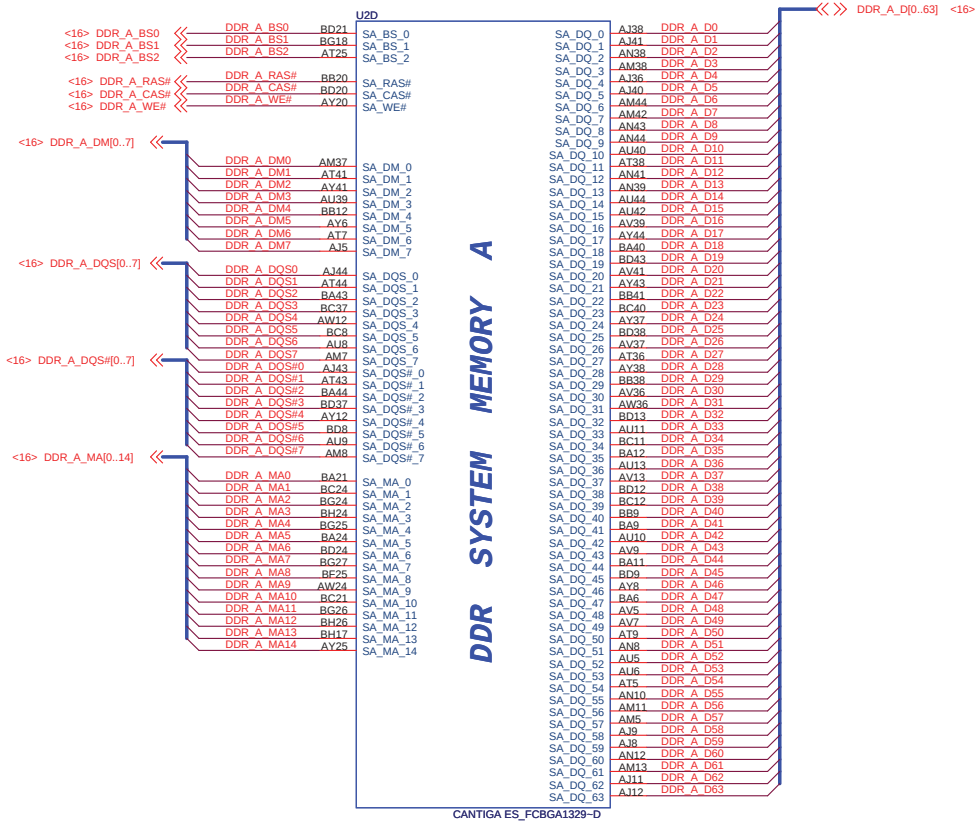

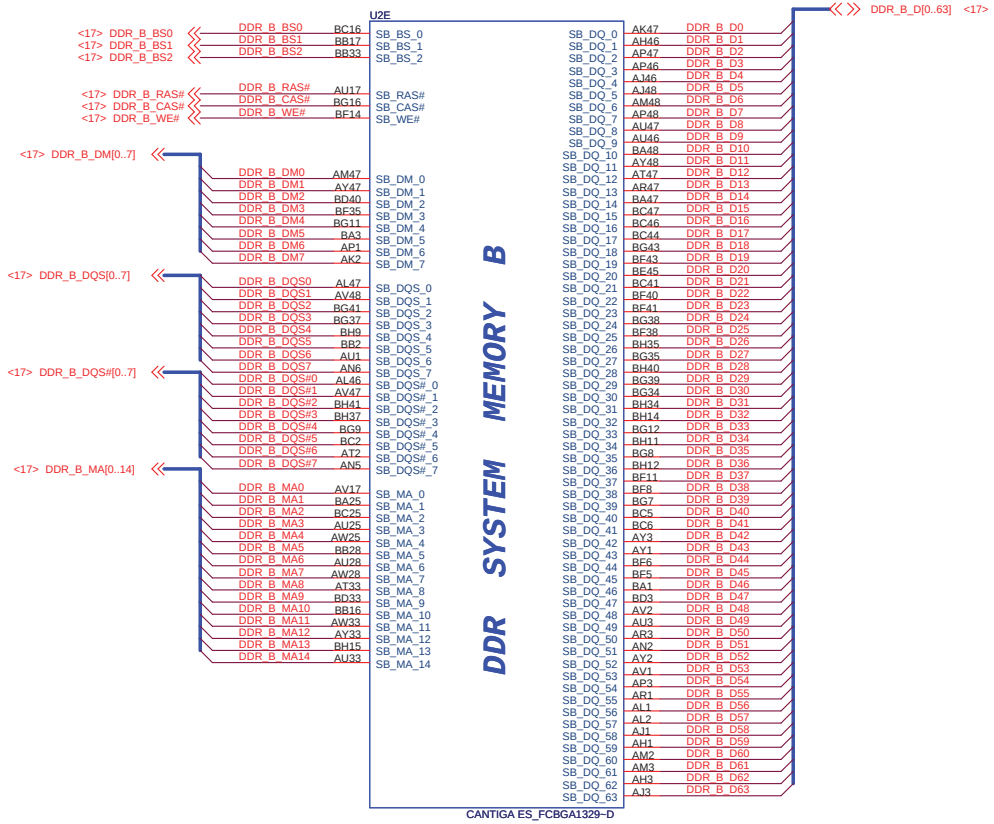

PROPRIETARY NOTE: THIS SHEET OF ENGINEERING DRAWING AND SPECIFICATIONS CONTAINS CONFIDENTIAL TRADE SECRET AND OTHER PROPRIETARY INFORMATION OF DELL INC. ("DELL") THIS DOCUMENT MAY NOT BE TRANSFERRED OR COPIED WITHOUT THE EXPRESS WRITTEN AUTHORIZATION OF DELL. IN ADDITION, NEITHER THIS SHEET NOR THE INFORMATION IT CONTAINS WAY BE USED BY OR DISCLOSED TO ANY THIRD PARTY WITHOUT DELL'S EXPRESS WRITTEN CONSENT.

DELL CONFIDENTIAL/PROPRIETARY

Compal Electronics, Inc.

Title	Cantiga(2 of 6)		
Size	Document Number LA-4041P		Rev 1.0
Date: Friday, June 13, 2008		Sheet 11 of 56	

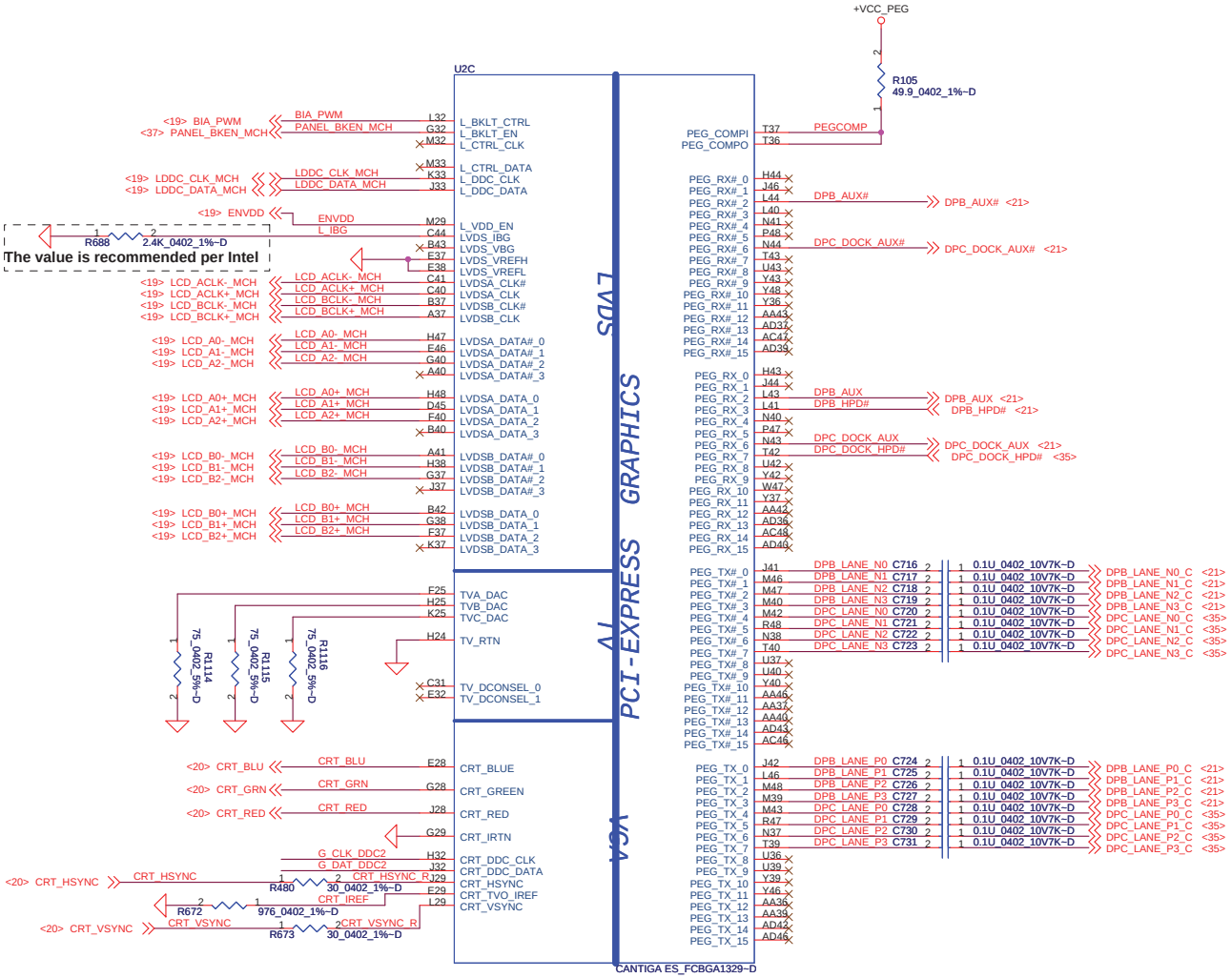

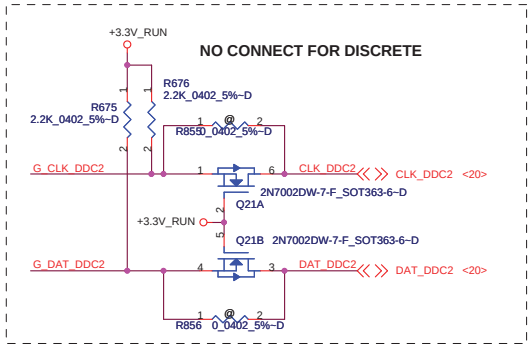

Strap Pin Table

CFG5	DMI X2 Select	Low = DMI x 2 High = DMI x 4 (Default)
CFG6	iTPM Host Interface	Low = iTPM enable High = iTPM disable(Defult)
CFG7	Management Engine Crypto Strap	Low = TLS cipher suite with no confidentiality High = TLS cipher suite with confidentiality(Default)
CFG9	PCI Express Graphic Lane	Low = Reverse Lane High = Normal Operation(Default)
CFG16	FSB Dynamic ODT	Low=Dynamic ODT Disable High=Dynamic ODT Enable(default)
CFG19	DMI Lane Reversal	Low=Normal (default) High=Lane Reversed
CFG20	SDVO/PCIE Concurrent Operation	Low=Only SDVO or PCIEx1 is operational (default) High=SDVO and PCIEx1 are operating simultaneously via PEG port
SDVO_CRTL_DATA		Low=No SDVO Device Present (default) High=SDVO Device Present
DDPC_CTRLDATA		Low=DisplayPort disabled (default) High=DisplayPort device present

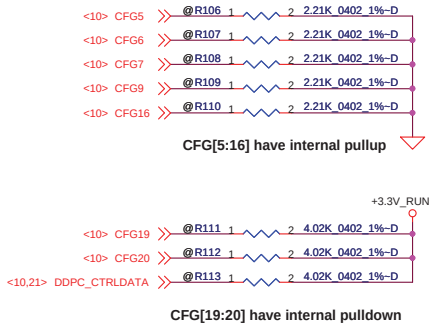

PROPRIETARY NOTE: THIS SHEET OF ENGINEERING DRAWING AND SPECIFICATIONS CONTAINS CONFIDENTIAL TRADE SECRET AND OTHER PROPRIETARY INFORMATION OF DELL INC. ("DELL") THIS DOCUMENT MAY NOT BE TRANSFERRED OR COPIED WITHOUT THE EXPRESS WRITTEN AUTHORIZATION OF DELL. IN ADDITION, NEITHER THIS SHEET NOR THE INFORMATION IT CONTAINS WAY BE USED BY OR DISCLOSED TO ANY THIRD PARTY WITHOUT DELL'S EXPRESS WRITTEN CONSENT.

DELL CONFIDENTIAL/PROPRIETARY

Compal Electronics, Inc.

Title: Cantiga(3 of 6)

Size | Document Number: LA-4041P | Rev: 1.0

Date: Friday, June 13, 2008 | Sheet 12 of 56

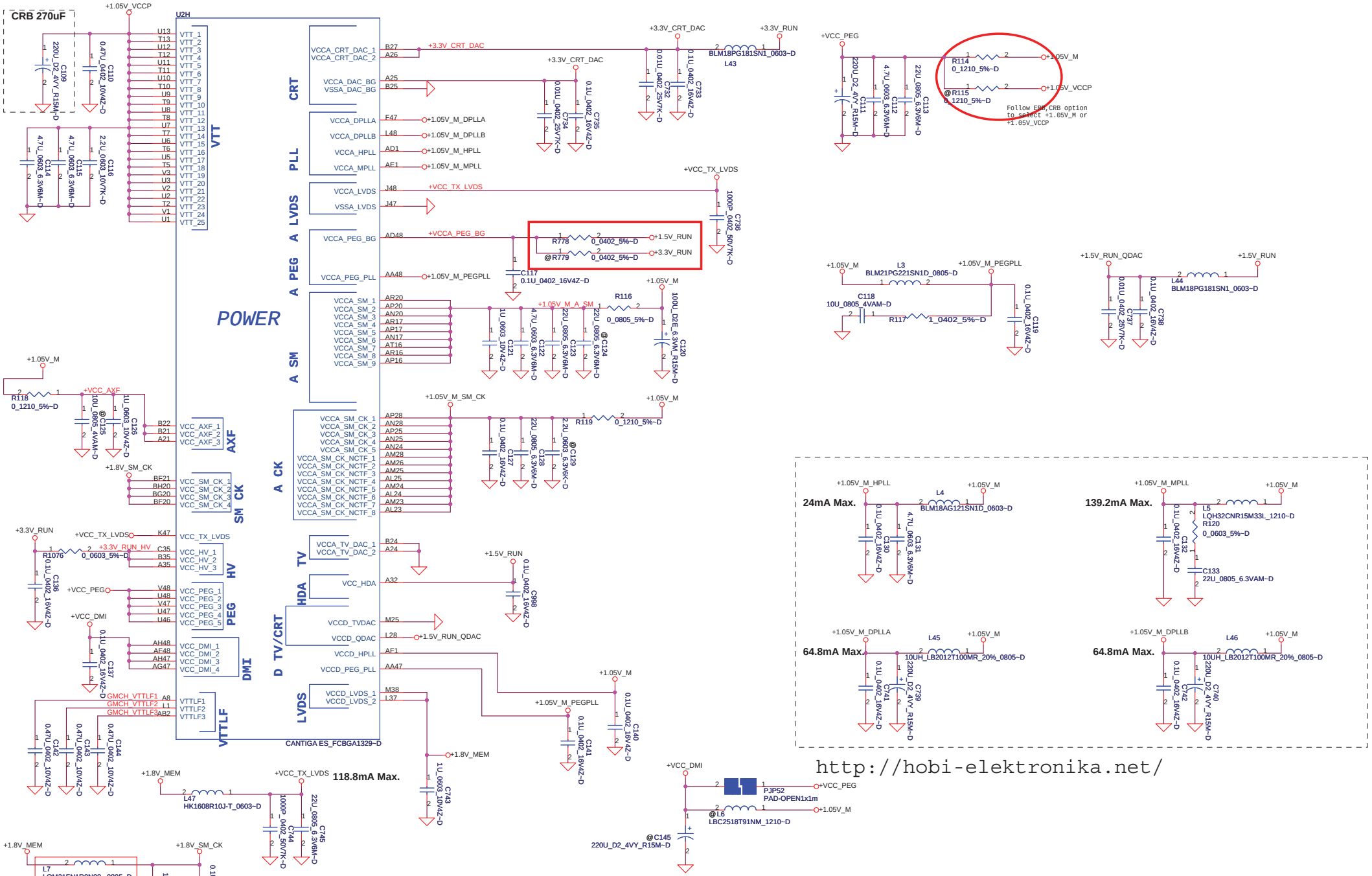

http://hobi-elektronika.net/

DELL CONFIDENTIAL/PROPRIETARY

PROPRIETARY NOTE: THIS SHEET OF ENGINEERING DRAWING AND SPECIFICATIONS CONTAINS CONFIDENTIAL TRADE SECRET AND OTHER PROPRIETARY INFORMATION OF DELL INC. ("DELL") THIS DOCUMENT MAY NOT BE TRANSFERRED OR COPIED WITHOUT THE EXPRESS WRITTEN AUTHORIZATION OF DELL. IN ADDITION, NEITHER THIS SHEET NOR THE INFORMATION IT CONTAINS WAY BE USED BY OR DISCLOSED TO ANY THIRD PARTY WITHOUT DELL'S EXPRESS WRITTEN CONSENT.

Compal Electronics, Inc.	
Title	Cantiga(4 of 6)
Size	Document Number: LA-4041P
Rev	1.0
Date: Friday, June 06, 2008	Sheet 13 of 56

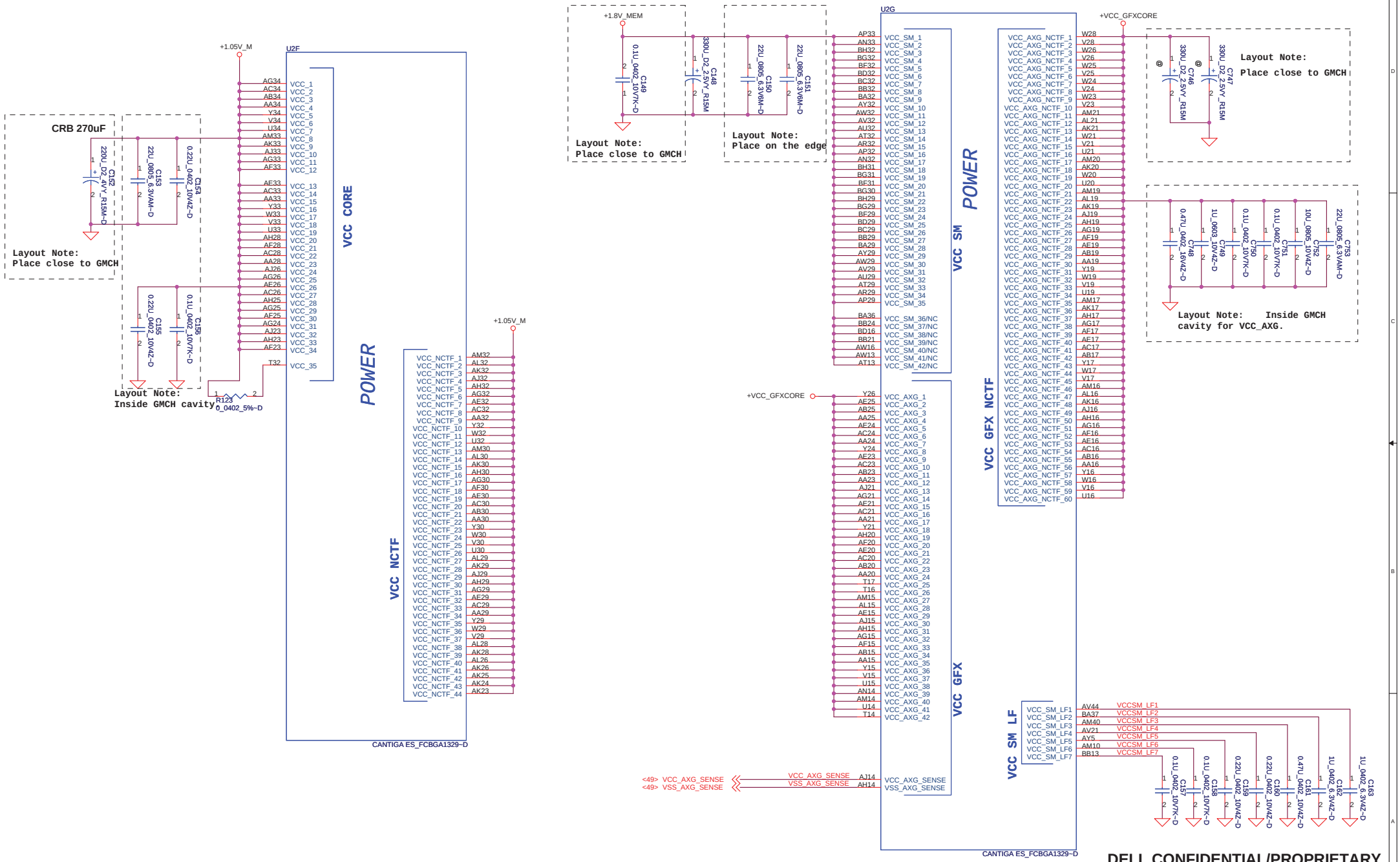

PROPRIETARY NOTE: THIS SHEET OF ENGINEERING DRAWING AND SPECIFICATIONS CONTAINS CONFIDENTIAL TRADE SECRET AND OTHER PROPRIETARY INFORMATION OF DELL INC. ("DELL") THIS DOCUMENT MAY NOT BE TRANSFERRED OR COPIED WITHOUT THE EXPRESS WRITTEN AUTHORIZATION OF DELL. IN ADDITION, NEITHER THIS SHEET NOR THE INFORMATION IT CONTAINS WAY BE USED BY OR DISCLOSED TO ANY THIRD PARTY WITHOUT DELL'S EXPRESS WRITTEN CONSENT.

DELL CONFIDENTIAL/PROPRIETARY

Compal Electronics, Inc.

Title	Cantiga(5 of 6)
Size	
Document Number	LA-4041P
Rev	1.0
Date: Friday, June 13, 2008	Sheet 14 of 56

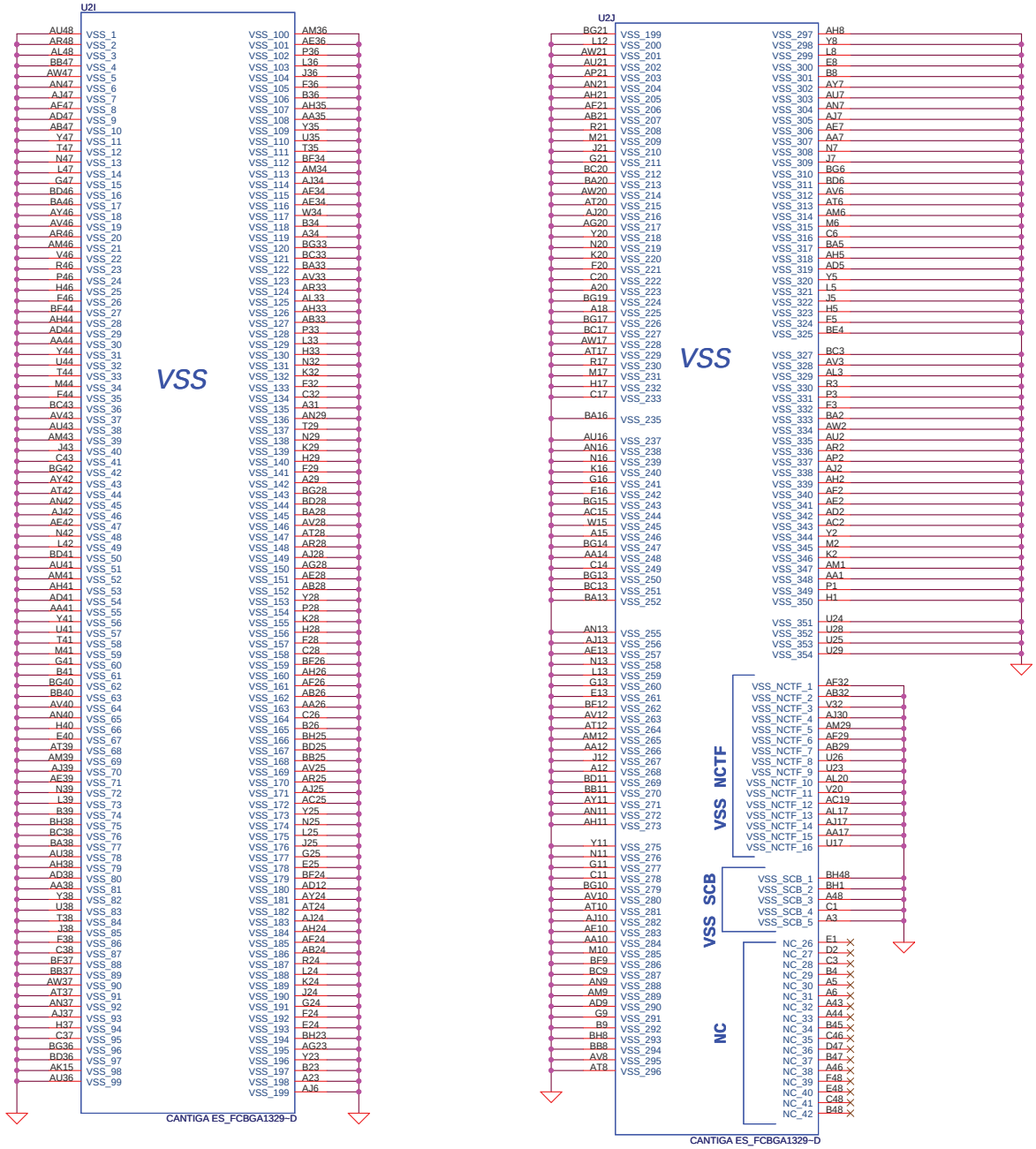

http://hobi-elektronika.net/

PROPRIETARY NOTE: THIS SHEET OF ENGINEERING DRAWING AND SPECIFICATIONS CONTAINS CONFIDENTIAL TRADE SECRET AND OTHER PROPRIETARY INFORMATION OF DELL INC. ("DELL") THIS DOCUMENT MAY NOT BE TRANSFERRED OR COPIED WITHOUT THE EXPRESS WRITTEN AUTHORIZATION OF DELL. IN ADDITION, NEITHER THIS SHEET NOR THE INFORMATION IT CONTAINS WAY BE USED BY OR DISCLOSED TO ANY THIRD PARTY WITHOUT DELL'S EXPRESS WRITTEN CONSENT.

DELL CONFIDENTIAL/PROPRIETARY

Compal Electronics, Inc.

Title: **Cantiga(6 of 6)**

Size | Document Number: **LA-4041P** | Rev: 1.0

Date: Thursday, June 05, 2008 | Sheet 15 of 56

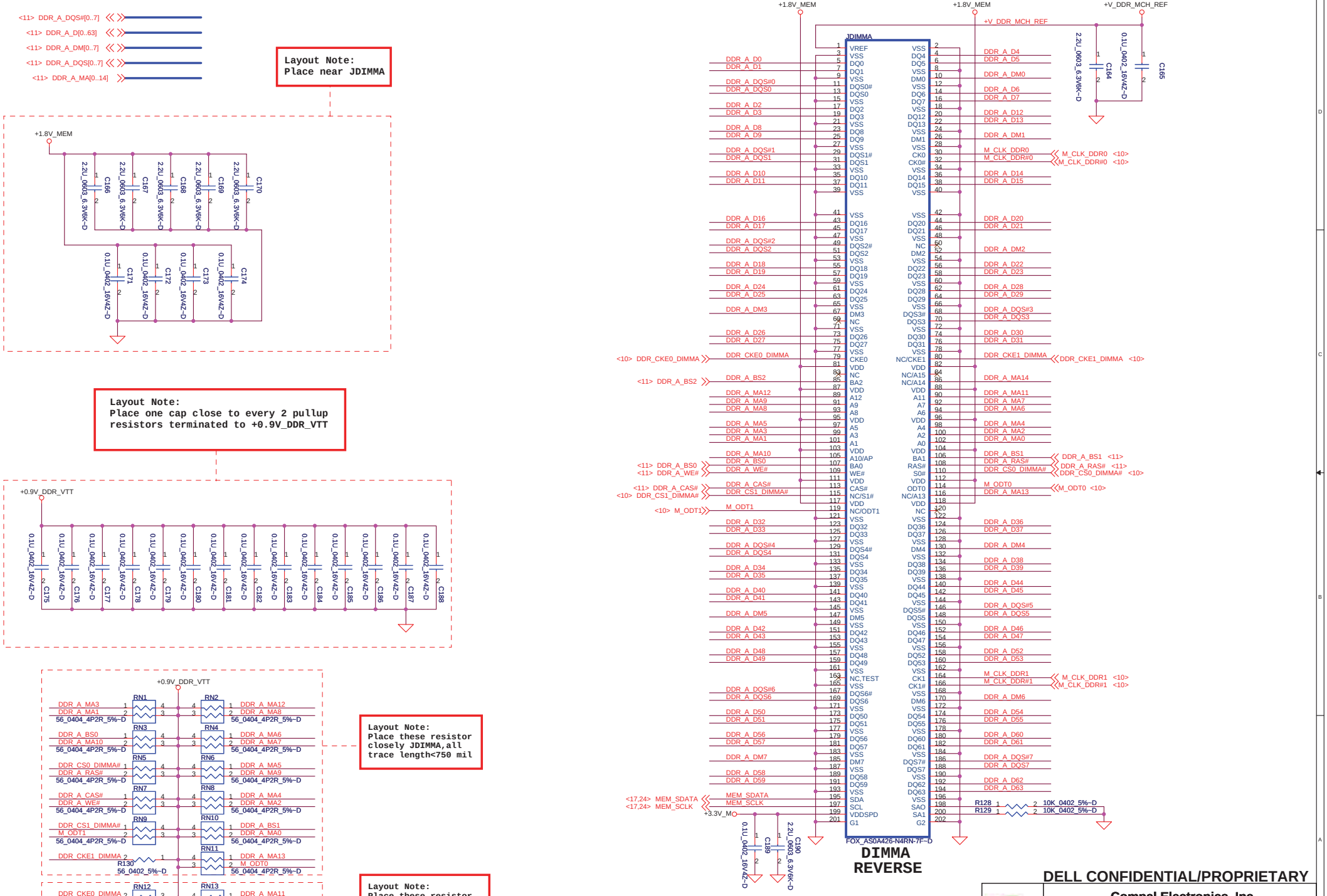

PROPRIETARY NOTE: THIS SHEET OF ENGINEERING DRAWING AND SPECIFICATIONS CONTAINS CONFIDENTIAL TRADE SECRET AND OTHER PROPRIETARY INFORMATION OF DELL INC. ("DELL") THIS DOCUMENT MAY NOT BE TRANSFERRED OR COPIED WITHOUT THE EXPRESS WRITTEN AUTHORIZATION OF DELL. IN ADDITION, NEITHER THIS SHEET NOR THE INFORMATION IT CONTAINS WAY BE USED BY OR DISCLOSED TO ANY THIRD PARTY WITHOUT DELL'S EXPRESS WRITTEN CONSENT.

DELL CONFIDENTIAL/PROPRIETARY

Compal Electronics, Inc.

Title: DDRII-SODIMM SLOT1

Size | Document Number: LA-4041P | Rev: 1.0

Date: Friday, June 13, 2008 | Sheet 16 of 56

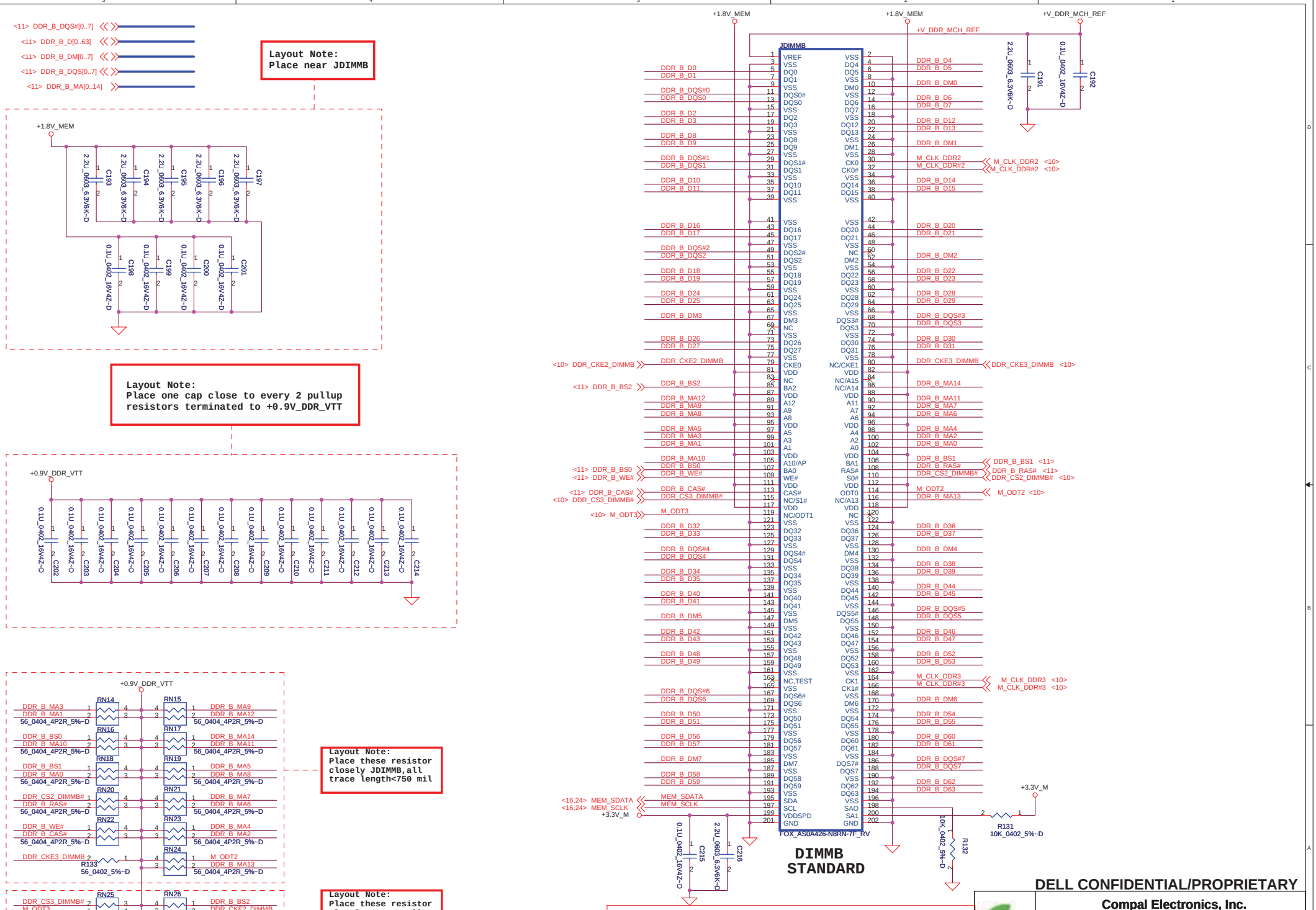

DELL CONFIDENTIAL/PROPRIETARY

PROPRIETARY NOTE: THIS SHEET OF ENGINEERING DRAWING AND SPECIFICATIONS CONTAINS CONFIDENTIAL TRADE SECRET AND OTHER PROPRIETARY INFORMATION OF DELL INC. ("DELL") THIS DOCUMENT MAY NOT BE TRANSFERRED OR COPIED WITHOUT THE EXPRESS WRITTEN AUTHORIZATION OF DELL. IN ADDITION, NEITHER THIS SHEET NOR THE INFORMATION IT CONTAINS WAY BE USED BY OR DISCLOSED TO ANY THIRD PARTY WITHOUT DELL'S EXPRESS WRITTEN CONSENT.

Compal Electronics, Inc.

Title: DDRII-SODIMM SLOT2

Size | Document Number: LA-4041P | Rev: 1.0

Date: Friday, June 13, 2008 | Sheet 17 of 56

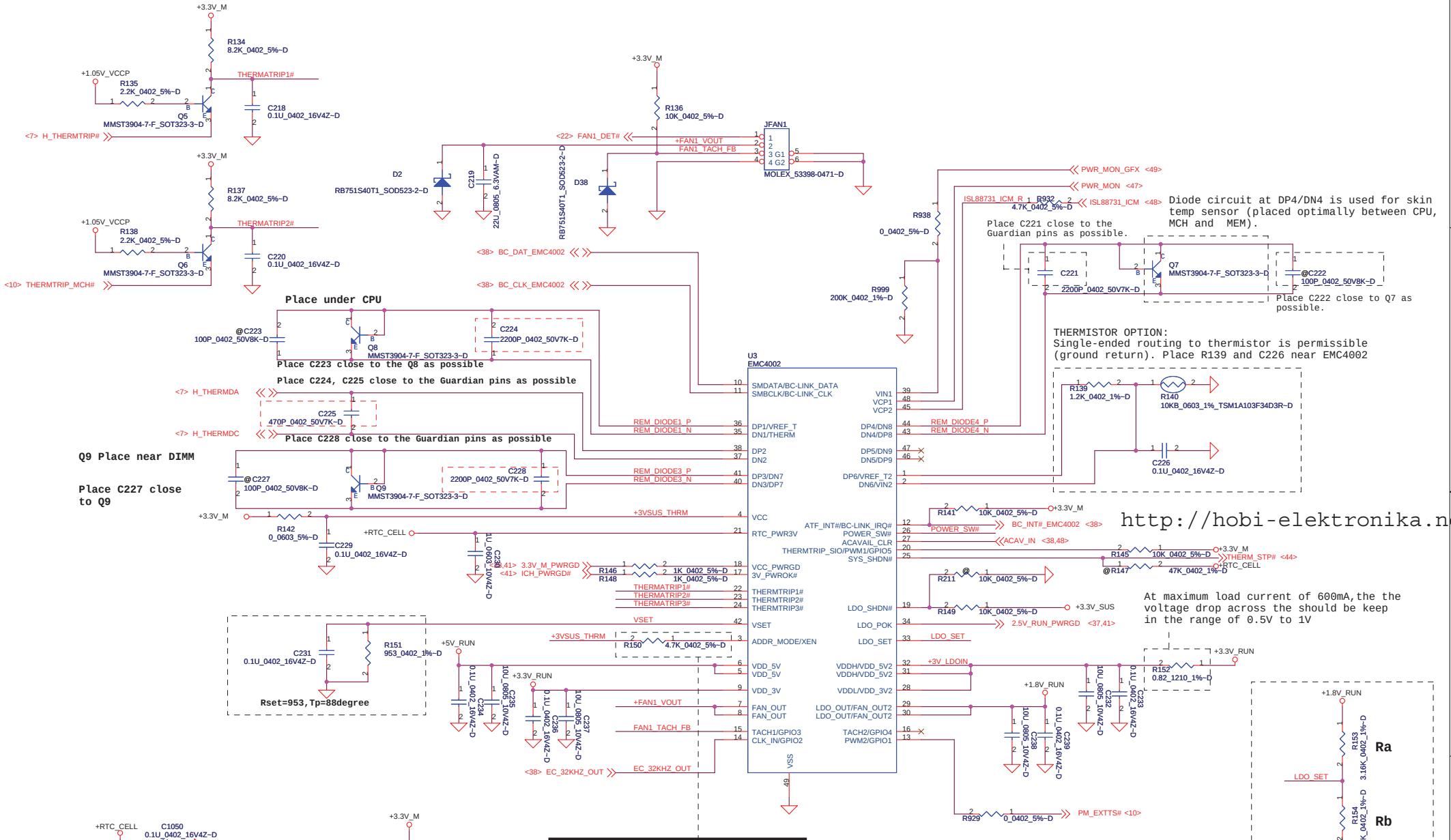

Pull-up Resistor on ADDR_MODE/XEN	For Remote1 mode	SMBUS Address
<= 4.7K +/- 5%	2N3904	2F(r/w)
10K	2N3904	2E(r/w)
18K	Thermistor	2F(r/w)
>= 33K	Thermistor	2E(r/w)

*

PROPRIETARY NOTE: THIS SHEET OF ENGINEERING DRAWING AND SPECIFICATIONS CONTAINS CONFIDENTIAL TRADE SECRET AND OTHER PROPRIETARY INFORMATION OF DELL INC. ("DELL") THIS DOCUMENT MAY NOT BE TRANSFERRED OR COPIED WITHOUT THE EXPRESS WRITTEN AUTHORIZATION OF DELL. IN ADDITION, NEITHER THIS SHEET NOR THE INFORMATION IT CONTAINS WAY BE USED BY OR DISCLOSED TO ANY THIRD PARTY WITHOUT DELL'S EXPRESS WRITTEN CONSENT.

DELL CONFIDENTIAL/PROPRIETARY

Compal Electronics, Inc.

Title: FAN & Thermal Sensor

Size | Document Number: LA-4041P | Rev 1.0

Date: Friday, June 13, 2008 | Sheet 18 of 56

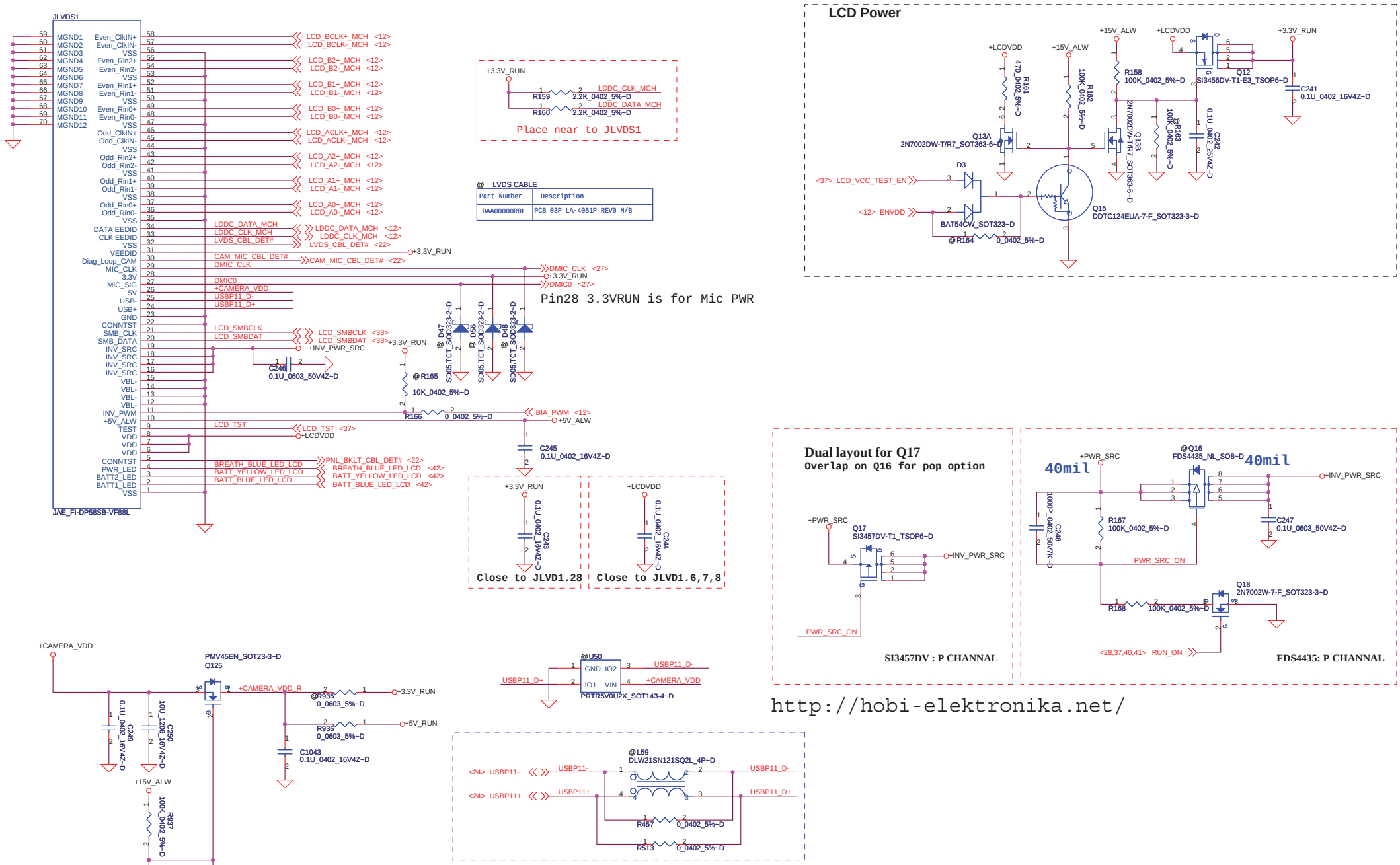

PROPRIETARY NOTE: THIS SHEET OF ENGINEERING DRAWING AND SPECIFICATIONS CONTAINS CONFIDENTIAL TRADE SECRET AND OTHER PROPRIETARY INFORMATION OF DELL INC. ("DELL") THIS DOCUMENT MAY NOT BE TRANSFERRED OR COPIED WITHOUT THE EXPRESS WRITTEN AUTHORIZATION OF DELL. IN ADDITION, NEITHER THIS SHEET NOR THE INFORMATION IT CONTAINS WAY BE USED BY OR DISCLOSED TO ANY THIRD PARTY WITHOUT DELL'S EXPRESS WRITTEN CONSENT.

DELL CONFIDENTIAL/PROPRIETARY

Compal Electronics, Inc.

Title: LVDS Conn

Size | Document Number: LA-4041P | Rev 1.0

Date: Friday, June 13, 2008 | Sheet 19 of 56

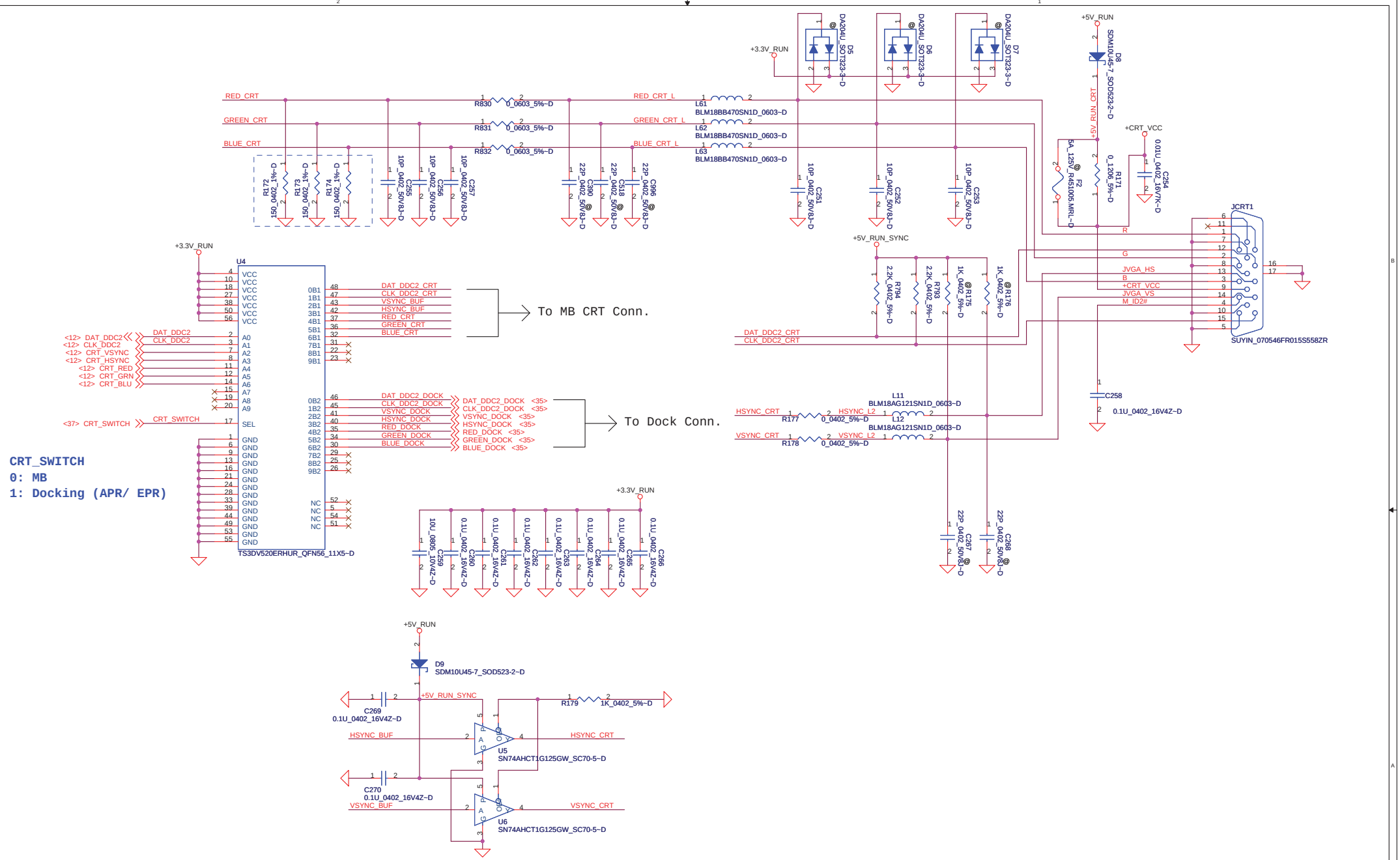

DELL CONFIDENTIAL/PROPRIETARY

PROPRIETARY NOTE: THIS SHEET OF ENGINEERING DRAWING AND SPECIFICATIONS CONTAINS CONFIDENTIAL TRADE SECRET AND OTHER PROPRIETARY INFORMATION OF DELL INC. ("DELL") THIS DOCUMENT MAY NOT BE TRANSFERRED OR COPIED WITHOUT THE EXPRESS WRITTEN AUTHORIZATION OF DELL. IN ADDITION, NEITHER THIS SHEET NOR THE INFORMATION IT CONTAINS WAY BE USED BY OR DISCLOSED TO ANY THIRD PARTY WITHOUT DELL'S EXPRESS WRITTEN CONSENT.

Compal Electronics, Inc.	
Title	CRT/Video switch
Size	Document Number: LA-4041P
Rev	1.0
Date: Friday, June 13, 2008	Sheet 20 of 56

SW for MB side

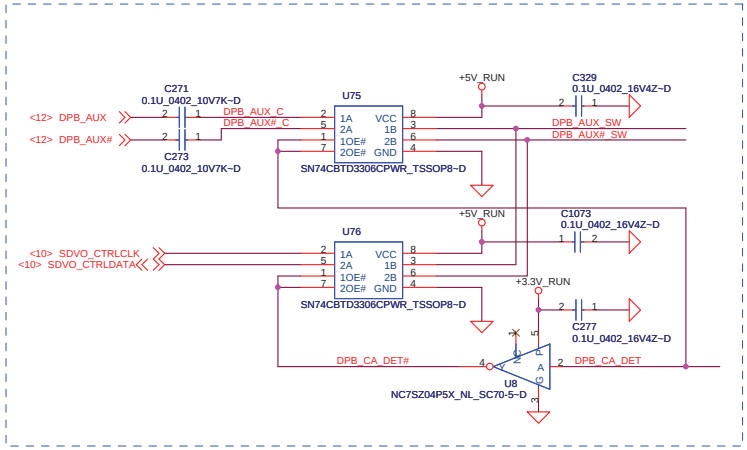

SW for eDOCK side

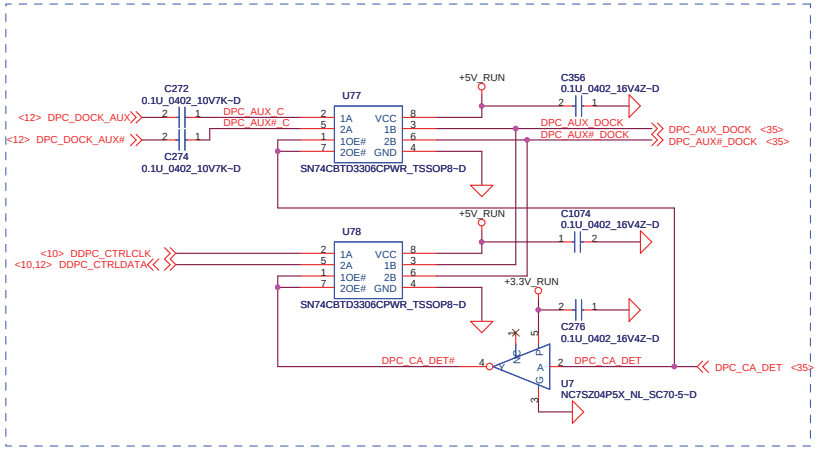

Display port Connector

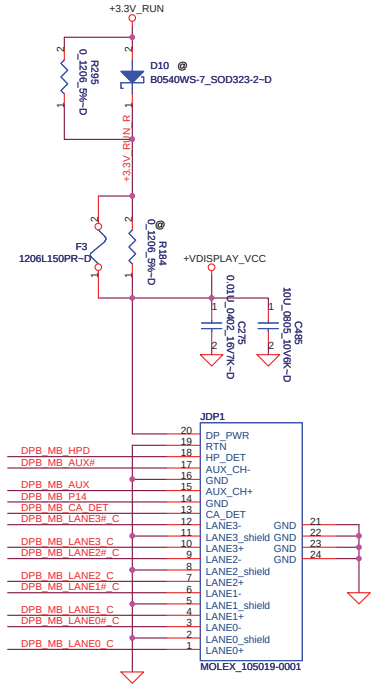

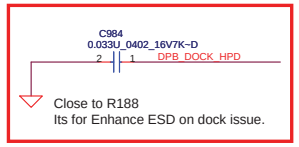

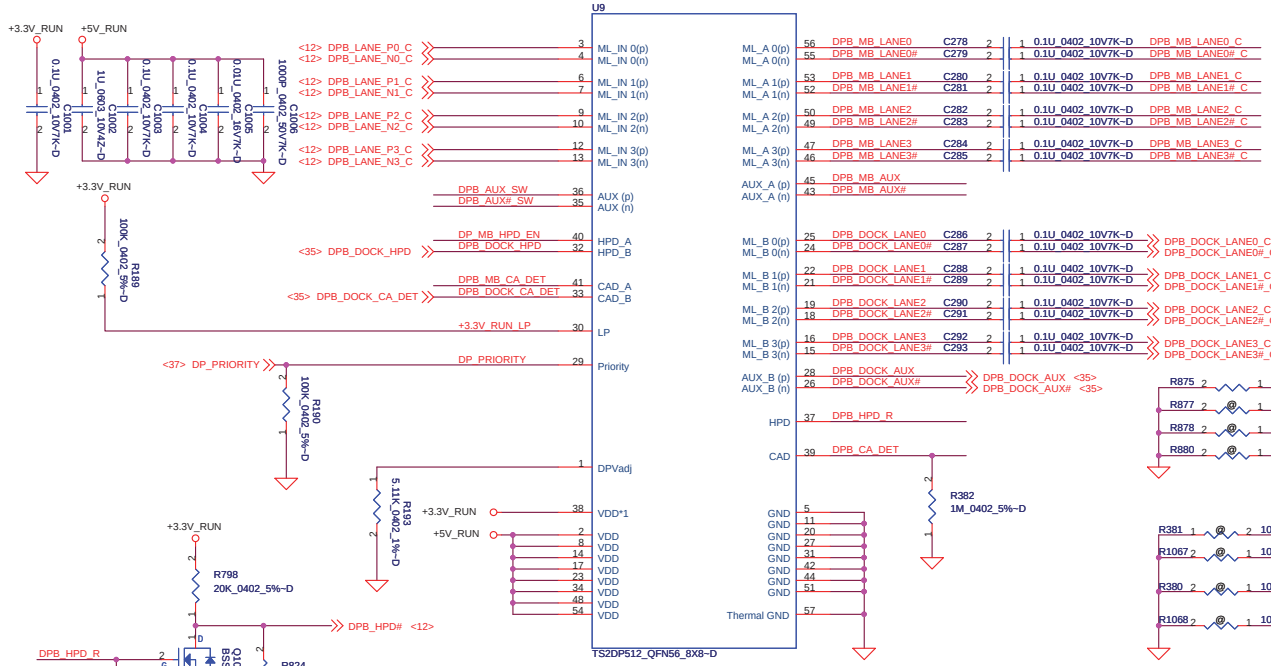

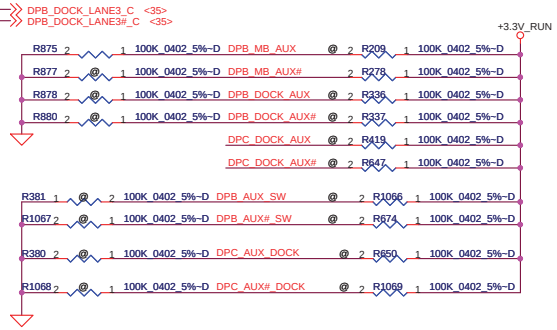

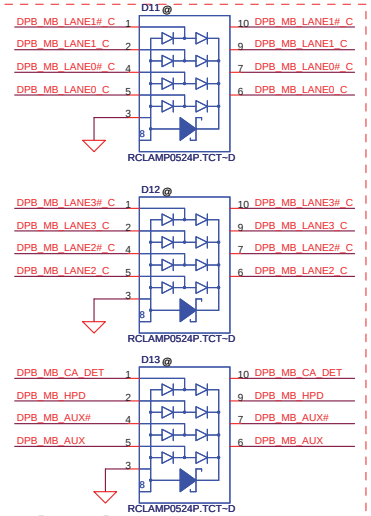

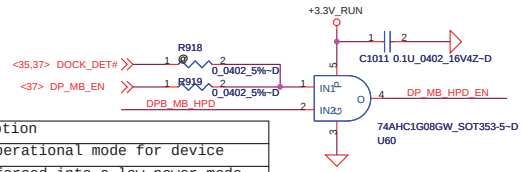

Pin30	Level	State	Description
LP	Hi	Normal Mode	Standard operational mode for device
	Low	Low power Mode	Device is forced into a low power mode causing the output s to go to a high-Z state, all other inputs are ignore

PROPRIETARY NOTE: THIS SHEET OF ENGINEERING DRAWING AND SPECIFICATIONS CONTAINS CONFIDENTIAL TRADE SECRET AND OTHER PROPRIETARY INFORMATION OF DELL INC. ("DELL") THIS DOCUMENT MAY NOT BE TRANSFERRED OR COPIED WITHOUT THE EXPRESS WRITTEN AUTHORIZATION OF DELL. IN ADDITION, NEITHER THIS SHEET NOR THE INFORMATION IT CONTAINS WAY BE USED BY OR DISCLOSED TO ANY THIRD PARTY WITHOUT DELL'S EXPRESS WRITTEN CONSENT.

DELL CONFIDENTIAL/PROPRIETARY

Compal Electronics, Inc.

Title: Display port

Size: | Document Number: LA-4041P | Rev: 1.0

Date: Friday, June 13, 2008 | Sheet 21 of 56

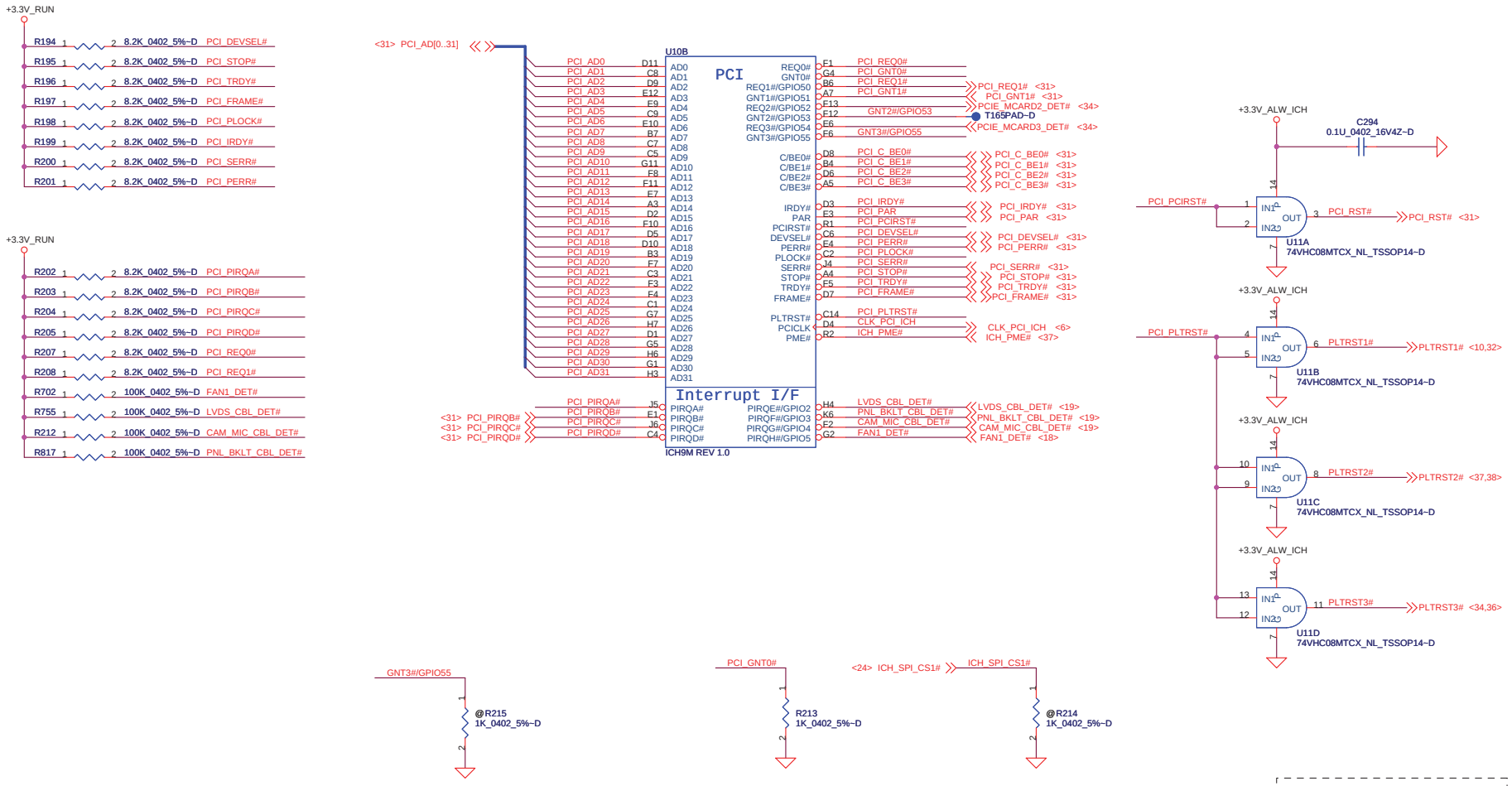

A16 away override strap.	
GNT3#/GPIO55	Low = A16 swap override enabled. High = Default.

*

Boot BIOS Strap		
PCI_GNT0#	SPI_CS1#	Boot BIOS Location
0	1	SPI
1	0	PCI
1	1	LPC

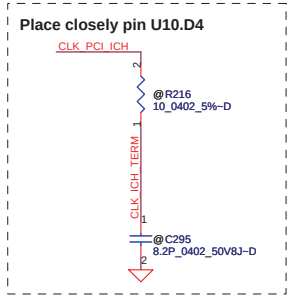

PROPRIETARY NOTE: THIS SHEET OF ENGINEERING DRAWING AND SPECIFICATIONS CONTAINS CONFIDENTIAL TRADE SECRET AND OTHER PROPRIETARY INFORMATION OF DELL INC. ("DELL") THIS DOCUMENT MAY NOT BE TRANSFERRED OR COPIED WITHOUT THE EXPRESS WRITTEN AUTHORIZATION OF DELL. IN ADDITION, NEITHER THIS SHEET NOR THE INFORMATION IT CONTAINS WAY BE USED BY OR DISCLOSED TO ANY THIRD PARTY WITHOUT DELL'S EXPRESS WRITTEN CONSENT.

DELL CONFIDENTIAL/PROPRIETARY

Compal Electronics, Inc.

Title: ICH9-M(1/4)

Size | Document Number: LA-4041P | Rev: 1.0

Date: Friday, June 13, 2008 | Sheet 22 of 56

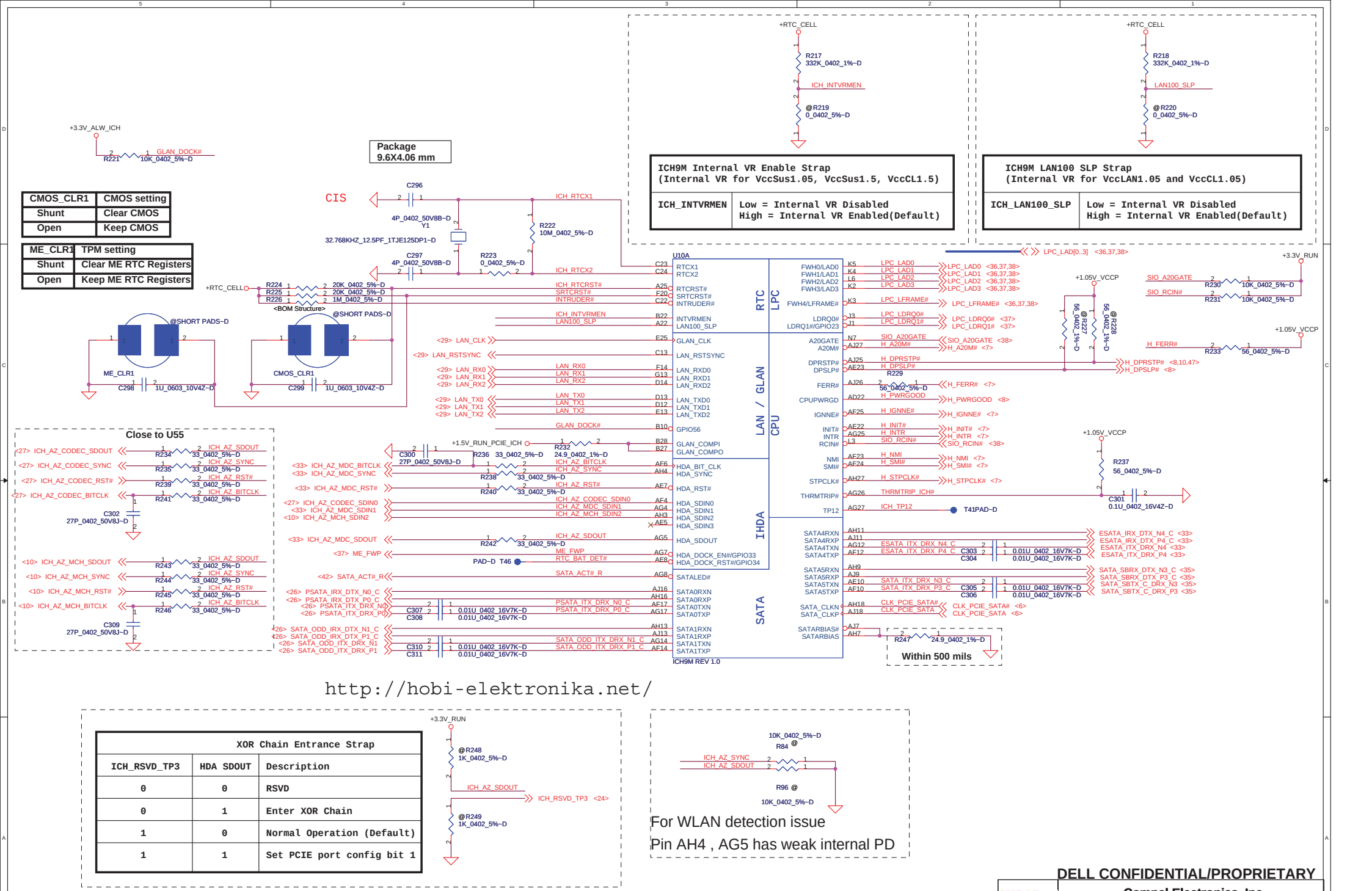

CMOS_CLR1	CMOS setting
Shunt	Clear CMOS
Open	Keep CMOS

ME_CLR1	TPM setting
Shunt	Clear ME RTC Registers
Open	Keep ME RTC Registers

http://hobi-elektronika.net/

XOR Chain Entrance Strap		
ICH_RSVD_TP3	HDA SDOUT	Description
0	0	RSVD
0	1	Enter XOR Chain
1	0	Normal Operation (Default)
1	1	Set PCIE port config bit 1

For WLAN detection issue

Pin AH4 , AG5 has weak internal PD

PROPRIETARY NOTE: THIS SHEET OF ENGINEERING DRAWING AND SPECIFICATIONS CONTAINS CONFIDENTIAL TRADE SECRET AND OTHER PROPRIETARY INFORMATION OF DELL INC. ("DELL") THIS DOCUMENT MAY NOT BE TRANSFERRED OR COPIED WITHOUT THE EXPRESS WRITTEN AUTHORIZATION OF DELL. IN ADDITION, NEITHER THIS SHEET NOR THE INFORMATION IT CONTAINS WAY BE USED BY OR DISCLOSED TO ANY THIRD PARTY WITHOUT DELL'S EXPRESS WRITTEN CONSENT.

DELL CONFIDENTIAL/PROPRIETARY
Compal Electronics, Inc.
Title: ICH9-M(2/4)
Size
Document Number: LA-4041P
Rev 1.0
Date: Friday, June 13, 2008
Sheet 23 of 56

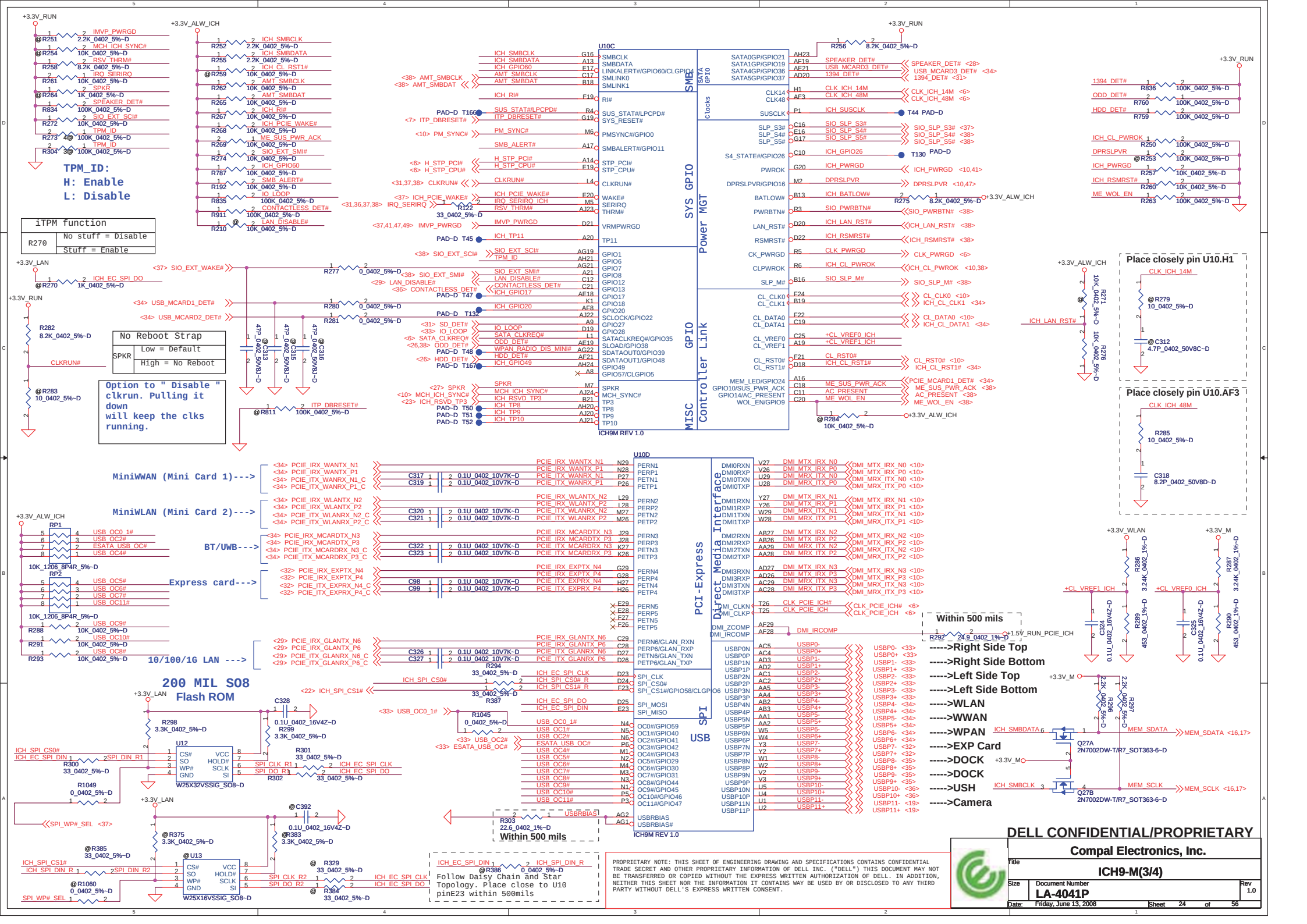
U10C
SMBCLK
SMBDATA
LINKALERT#/GPIO60/CLGPIO4
SMLINK0
SMLINK1
RI#
SUS_STAT#/LPCPD#
SYS_RESET#
PMSYNC#/GPIO0
SMBALERT#/GPIO11
STP_PCI#
STP_CPU#
CLKRUN#
WAKE#
SERIRQ
THRM#
VRMPWRGD
TP11
GPIO1
GPIO6
GPIO7
GPIO8
GPIO12
GPIO13
GPIO17
GPIO18
GPIO20
SCLOCK/GPIO22
GPIO27
GPIO28
SATACLKREQ#/GPIO35
SLOAD/GPIO38
SDATAOUT0/GPIO39
SDATAOUT1/GPIO48
GPIO49
GPIO57/CLGPIO5
SPKR
MCH_SYNC#
TP3
TP8
TP9
TP10
ICH9M REV 1.0
SMB
SATA GPIO
Clocks
SYS GPIO
Power MGT
GPIO
Controller Link
MISC
SATA0GP/GPIO21
SATA1GP/GPIO19
SATA4GP/GPIO36
SATA5GP/GPIO37
SPEAKER_DET#
USB_MCARD3_DET#
1394_DET#
CLK_ICH_14M
CLK_ICH_48M
ICH_SUSCLK
SIO_SLP_S3#
SIO_SLP_S4#
SIO_SLP_S5#
ICH_GPIO26
ICH_PWRGD
DPRSLPVR
ICH_BATLOW#
SIO_PWRBTN#
ICH_LAN_RST#
ICH_RSMRST#
CLK_PWRGD
ICH_CL_PWROK
SIO_SLP_M#
CL_CLK0
CL_CLK1
CL_DATA0
CL_DATA1
+CL_VREF0_ICH
+CL_VREF1_ICH
CL_RST0#
ICH_CL_RST1#
PCIE_MCARD1_DET#
ME_SUS_PWR_ACK
AC_PRESENT
ME_WOL_EN
MEM_LED/GPIO24
GPIO10/SUS_PWR_ACK
GPIO14/AC_PRESENT
WOL_EN/GPIO9
U10D
PERN1
PERP1
PETN1
PETP1
PERN2
PERP2
PETN2
PETP2
PERN3
PERP3
PETN3
PETP3
PERN4
PERP4
PETN4
PETP4
PERN5
PERP5
PETN5
PETP5
PERN6/GLAN_RXN
PERP6/GLAN_RXP
PETN6/GLAN_TXN
PETP6/GLAN_TXP
SPI_CLK
SPI_CS0#
SPI_CS1#/GPIO58/CLGPIO6
SPI_MOSI
SPI_MISO
OC0#/GPIO59
OC1#/GPIO40
OC2#/GPIO41
OC3#/GPIO42
OC4#/GPIO43
OC5#/GPIO29
OC6#/GPIO30
OC7#/GPIO31
OC8#/GPIO44
OC9#/GPIO45
OC10#/GPIO46
OC11#/GPIO47
USBRBIAS
USBRBIAS#
ICH9M REV 1.0
PCI-Express
Direct Media Interface
SPI
USB
DMI0RXN
DMI0RXP
DMI0TXN
DMI0TXP
DMI1RXN
DMI1RXP
DMI1TXN
DMI1TXP
DMI2RXN
DMI2RXP
DMI2TXN
DMI2TXP
DMI3RXN
DMI3RXP
DMI3TXN
DMI3TXP
DMI_CLKN
DMI_CLKP
DMI_ZCOMP
DMI_IRCOMP
USBP0N
USBP0P
USBP1N
USBP1P
USBP2N
USBP2P
USBP3N
USBP3P
USBP4N
USBP4P
USBP5N
USBP5P
USBP6N
USBP6P
USBP7N
USBP7P
USBP8N
USBP8P
USBP9N
USBP9P
USBP10N
USBP10P
USBP11N
USBP11P
+3.3V_RUN
+3.3V_ALW_ICH
+3.3V_LAN
+3.3V_M
+3.3V_WLAN
TPM_ID:
H: Enable
L: Disable
iTPM function
R270
No stuff = Disable
Stuff = Enable
No Reboot Strap
SPKR
Low = Default
High = No Reboot
Option to " Disable " clkrun. Pulling it down will keep the clks running.
Place closely pin U10.H1
Place closely pin U10.AF3
MiniWWAN (Mini Card 1)--->
MiniWLAN (Mini Card 2)--->
BT/UWB--->
Express card--->
10/100/1G LAN --->
200 MIL SO8
Flash ROM
W25X32VSSIG_SO8-D
W25X16VSSIG_SO8-D
Within 500 mils
------>Right Side Top
------>Right Side Bottom
------>Left Side Top
------>Left Side Bottom
------>WLAN
------>WWAN
------>WPAN
------>EXP Card
------>DOCK
------>DOCK
------>USH
------>Camera
Follow Daisy Chain and Star Topology. Place close to U10 pinE23 within 500mils
DELL CONFIDENTIAL/PROPRIETARY
Compal Electronics, Inc.
ICH9-M(3/4)
LA-4041P
Rev 1.0
Date: Friday, June 13, 2008
Sheet 24 of 56

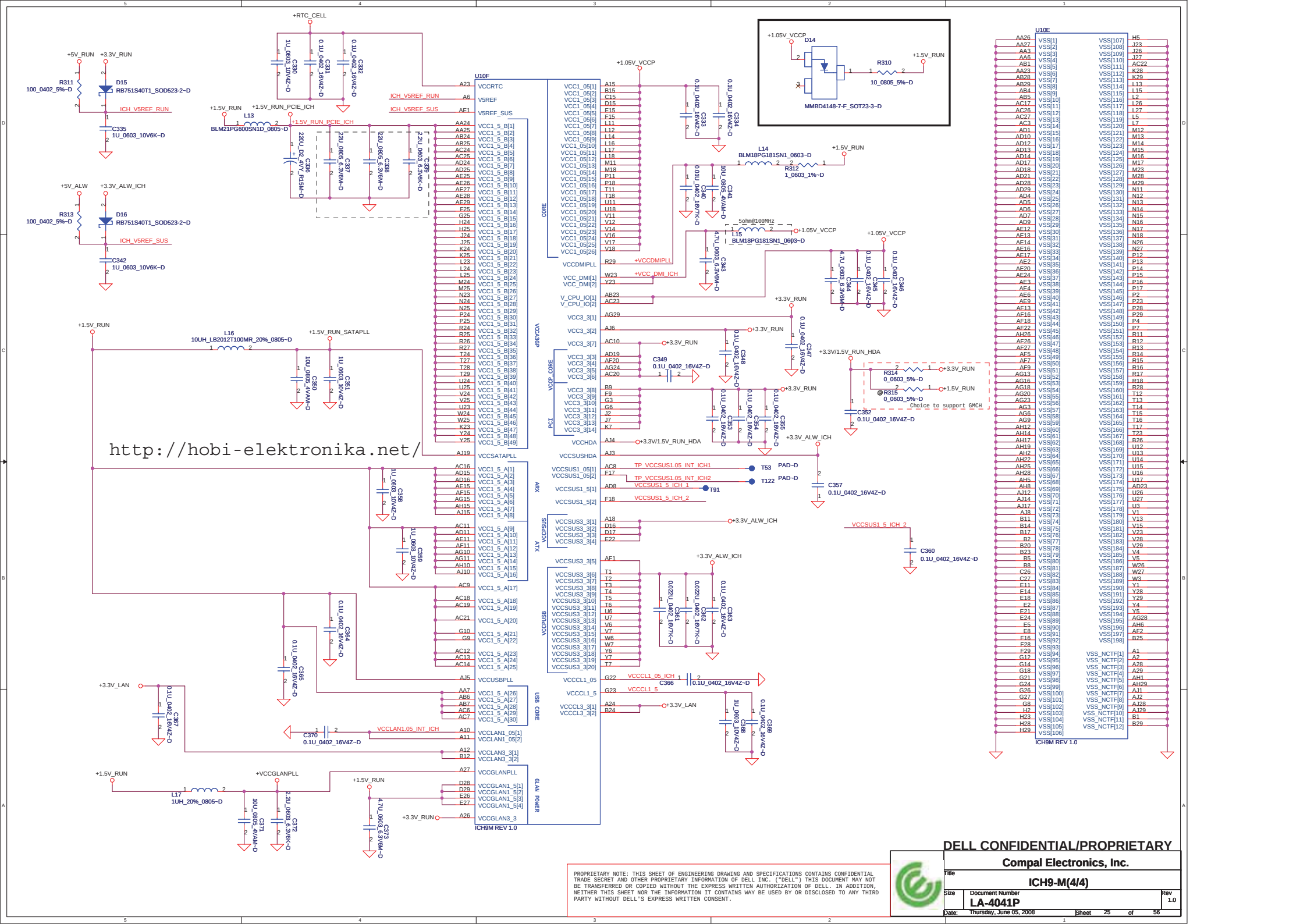

DELL CONFIDENTIAL/PROPRIETARY

PROPRIETARY NOTE: THIS SHEET OF ENGINEERING DRAWING AND SPECIFICATIONS CONTAINS CONFIDENTIAL TRADE SECRET AND OTHER PROPRIETARY INFORMATION OF DELL INC. ("DELL") THIS DOCUMENT MAY NOT BE TRANSFERRED OR COPIED WITHOUT THE EXPRESS WRITTEN AUTHORIZATION OF DELL. IN ADDITION, NEITHER THIS SHEET NOR THE INFORMATION IT CONTAINS WAY BE USED BY OR DISCLOSED TO ANY THIRD PARTY WITHOUT DELL'S EXPRESS WRITTEN CONSENT.

Compal Electronics, Inc.	
Title	ICH9-M(4/4)
Size	
Document Number	LA-4041P
Rev	1.0
Date: Thursday, June 05, 2008	Sheet 25 of 56

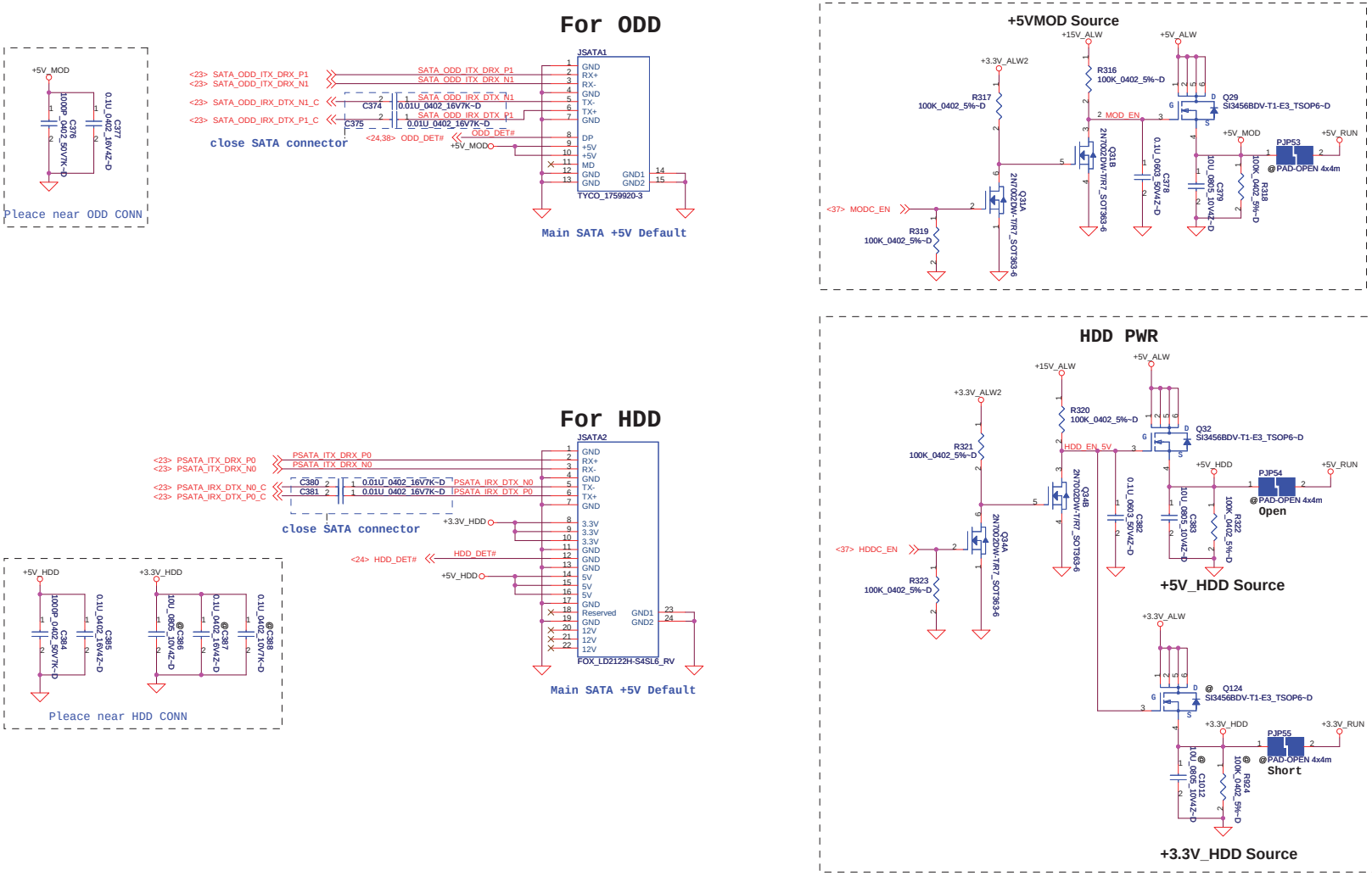

PROPRIETARY NOTE: THIS SHEET OF ENGINEERING DRAWING AND SPECIFICATIONS CONTAINS CONFIDENTIAL TRADE SECRET AND OTHER PROPRIETARY INFORMATION OF DELL INC. ("DELL") THIS DOCUMENT MAY NOT BE TRANSFERRED OR COPIED WITHOUT THE EXPRESS WRITTEN AUTHORIZATION OF DELL. IN ADDITION, NEITHER THIS SHEET NOR THE INFORMATION IT CONTAINS WAY BE USED BY OR DISCLOSED TO ANY THIRD PARTY WITHOUT DELL'S EXPRESS WRITTEN CONSENT.

DELL CONFIDENTIAL/PROPRIETARY

Compal Electronics, Inc.

Title: ODD/HDD CONNECTOR

Size | Document Number: LA-4041P | Rev: 1.0

Date: Friday, June 13, 2008 | Sheet 26 of 56

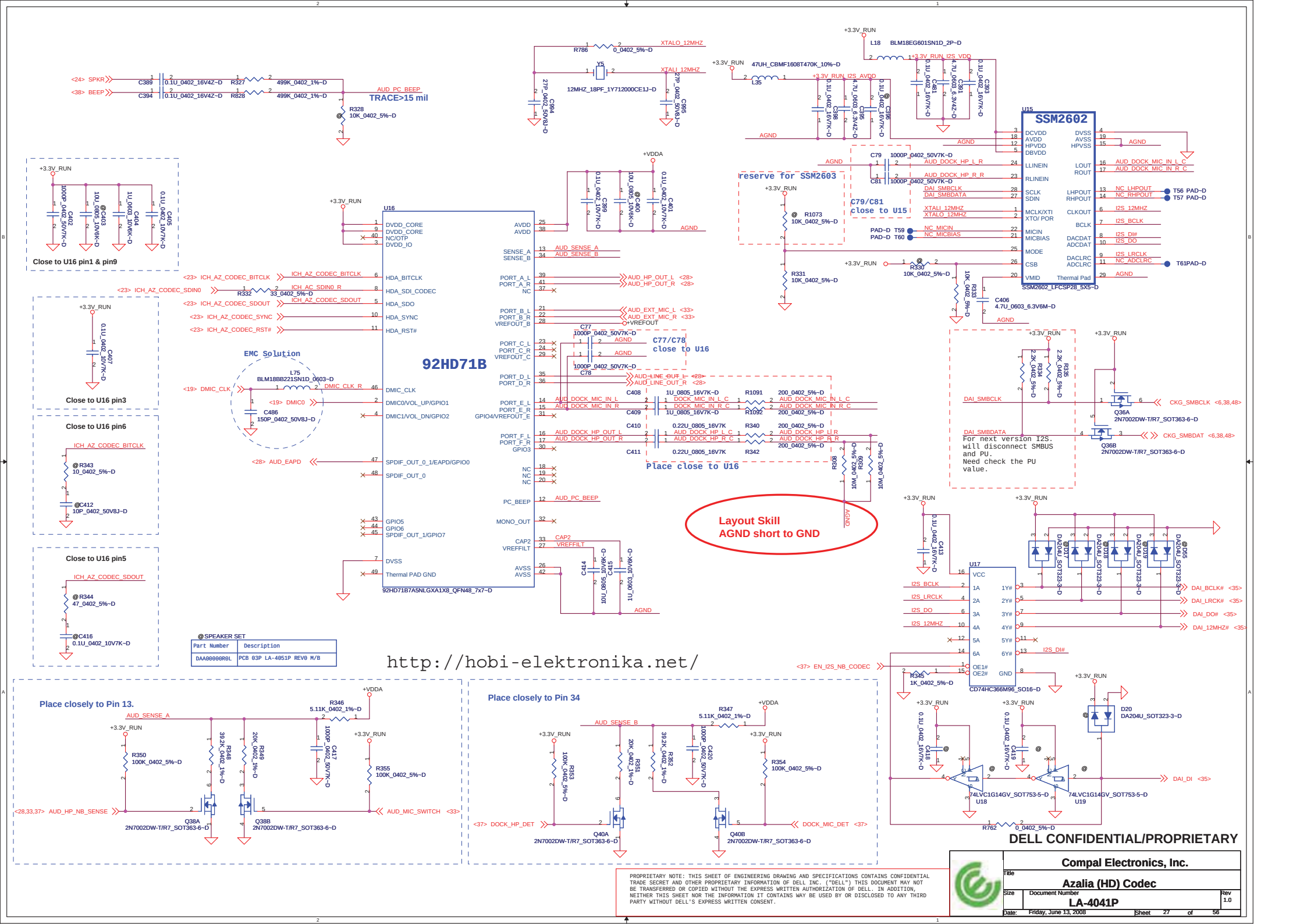

@SPEAKER SET

Part Number	Description
DAA00000R0L	PCB 03P LA-4051P REV0 M/B

http://hobi-elektronika.net/

DELL CONFIDENTIAL/PROPRIETARY

PROPRIETARY NOTE: THIS SHEET OF ENGINEERING DRAWING AND SPECIFICATIONS CONTAINS CONFIDENTIAL TRADE SECRET AND OTHER PROPRIETARY INFORMATION OF DELL INC. ("DELL") THIS DOCUMENT MAY NOT BE TRANSFERRED OR COPIED WITHOUT THE EXPRESS WRITTEN AUTHORIZATION OF DELL. IN ADDITION, NEITHER THIS SHEET NOR THE INFORMATION IT CONTAINS WAY BE USED BY OR DISCLOSED TO ANY THIRD PARTY WITHOUT DELL'S EXPRESS WRITTEN CONSENT.

Compal Electronics, Inc.

Title: Azalia (HD) Codec

Size | Document Number: LA-4041P | Rev: 1.0

Date: Friday, June 13, 2008 | Sheet 27 of 56

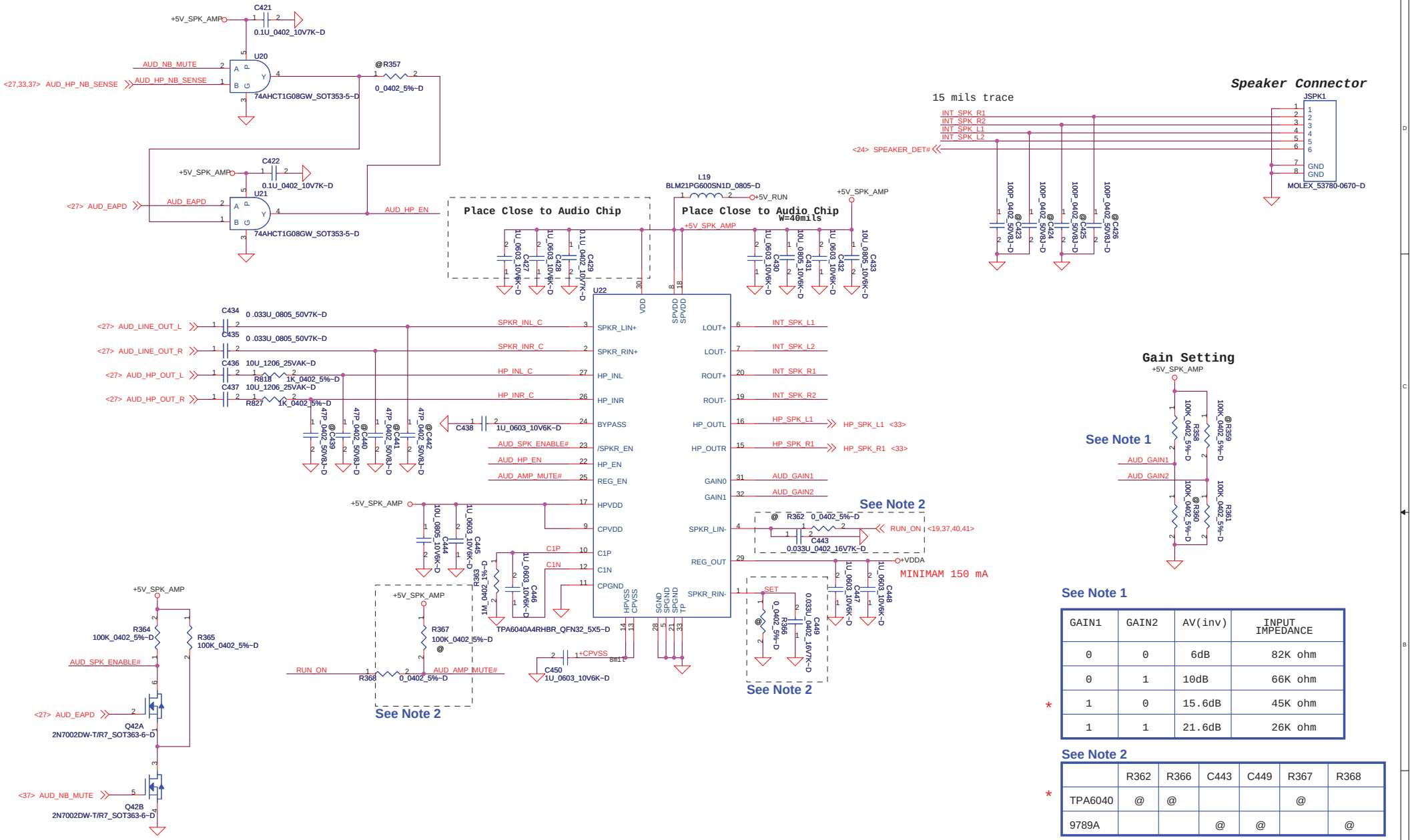

See Note 1

GAIN1	GAIN2	AV(inv)	INPUT IMPEDANCE
0	0	6dB	82K ohm
0	1	10dB	66K ohm
* 1	0	15.6dB	45K ohm
1	1	21.6dB	26K ohm

See Note 2

	R362	R366	C443	C449	R367	R368
* TPA6040	@	@			@	
9789A			@	@		@

DELL CONFIDENTIAL/PROPRIETARY

PROPRIETARY NOTE: THIS SHEET OF ENGINEERING DRAWING AND SPECIFICATIONS CONTAINS CONFIDENTIAL TRADE SECRET AND OTHER PROPRIETARY INFORMATION OF DELL INC. ("DELL") THIS DOCUMENT MAY NOT BE TRANSFERRED OR COPIED WITHOUT THE EXPRESS WRITTEN AUTHORIZATION OF DELL. IN ADDITION, NEITHER THIS SHEET NOR THE INFORMATION IT CONTAINS WAY BE USED BY OR DISCLOSED TO ANY THIRD PARTY WITHOUT DELL'S EXPRESS WRITTEN CONSENT.

Compal Electronics, Inc.
Title: AMP and PHONE JACK
Size | Document Number: LA-4041P | Rev 1.0
Date: Friday, June 13, 2008 | Sheet 28 of 56

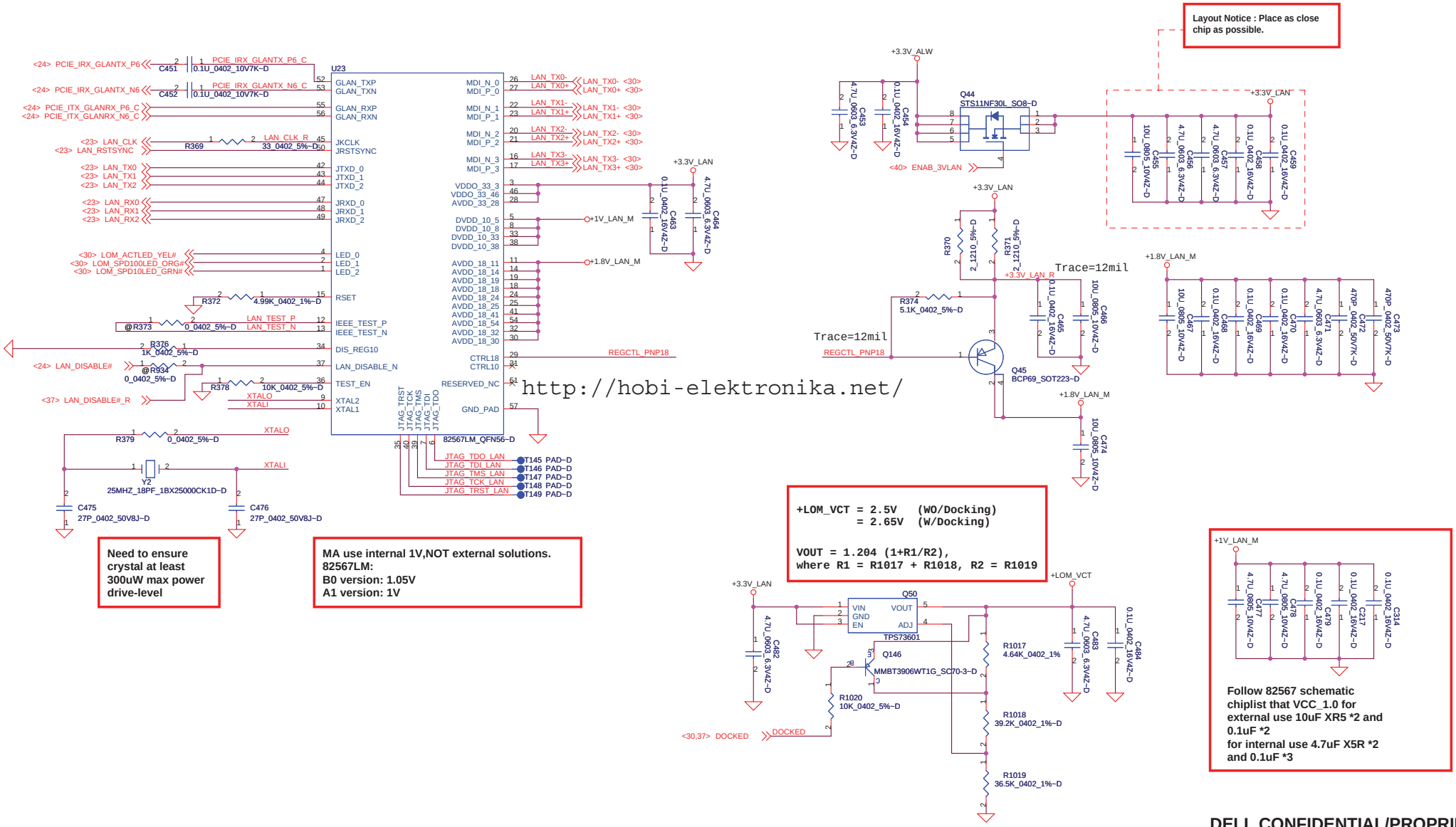

PROPRIETARY NOTE: THIS SHEET OF ENGINEERING DRAWING AND SPECIFICATIONS CONTAINS CONFIDENTIAL TRADE SECRET AND OTHER PROPRIETARY INFORMATION OF DELL INC. ("DELL") THIS DOCUMENT MAY NOT BE TRANSFERRED OR COPIED WITHOUT THE EXPRESS WRITTEN AUTHORIZATION OF DELL. IN ADDITION, NEITHER THIS SHEET NOR THE INFORMATION IT CONTAINS WAY BE USED BY OR DISCLOSED TO ANY THIRD PARTY WITHOUT DELL'S EXPRESS WRITTEN CONSENT.

DELL CONFIDENTIAL/PROPRIETARY

Compal Electronics, Inc.

Title: LAN-82567LM

Size | Document Number: LA-4041P | Rev: 1.0

Date: Friday, June 13, 2008 | Sheet 29 of 56

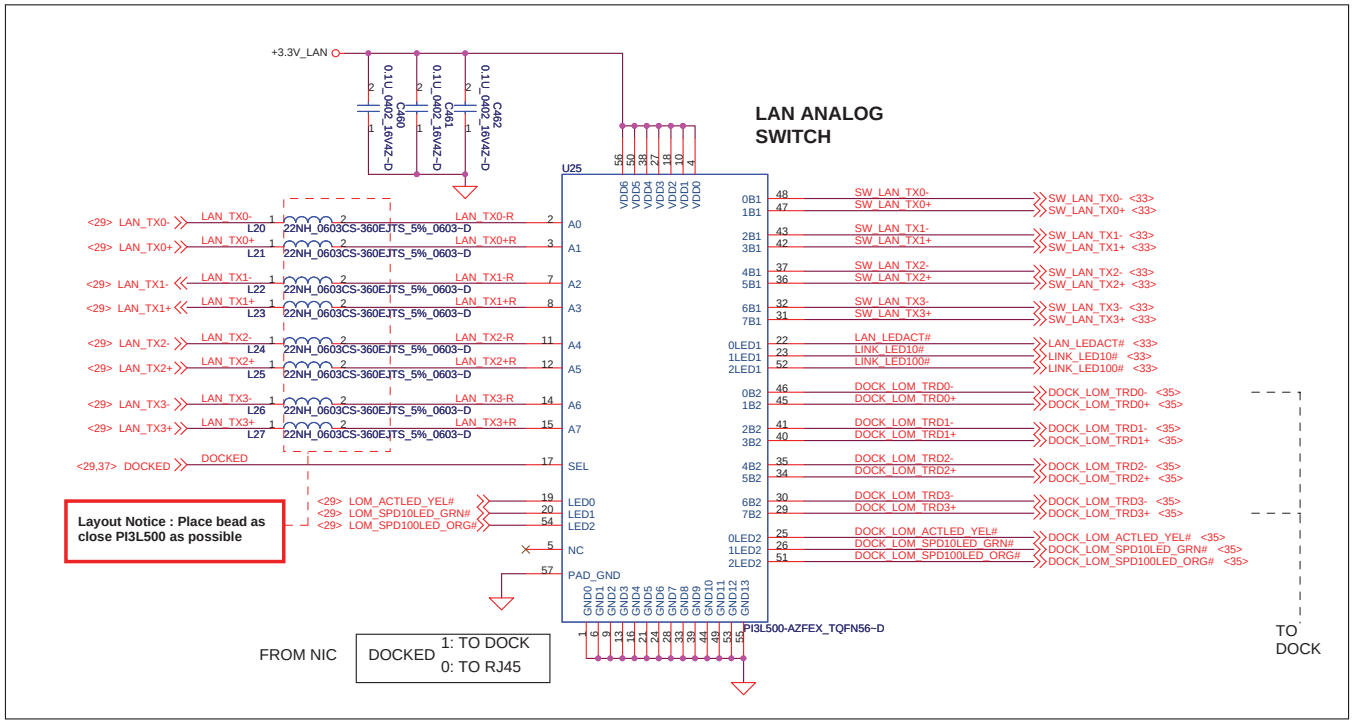

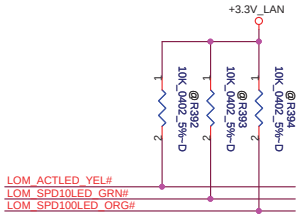

PROPRIETARY NOTE: THIS SHEET OF ENGINEERING DRAWING AND SPECIFICATIONS CONTAINS CONFIDENTIAL TRADE SECRET AND OTHER PROPRIETARY INFORMATION OF DELL INC. ("DELL") THIS DOCUMENT MAY NOT BE TRANSFERRED OR COPIED WITHOUT THE EXPRESS WRITTEN AUTHORIZATION OF DELL. IN ADDITION, NEITHER THIS SHEET NOR THE INFORMATION IT CONTAINS WAY BE USED BY OR DISCLOSED TO ANY THIRD PARTY WITHOUT DELL'S EXPRESS WRITTEN CONSENT.

DELL CONFIDENTIAL/PROPRIETARY

Compal Electronics, Inc.

Title	LAN TRANSFOMER	
Size	Document Number: LA-4041P	Rev 1.0
Date: Friday, June 13, 2008	Sheet 30 of 56	

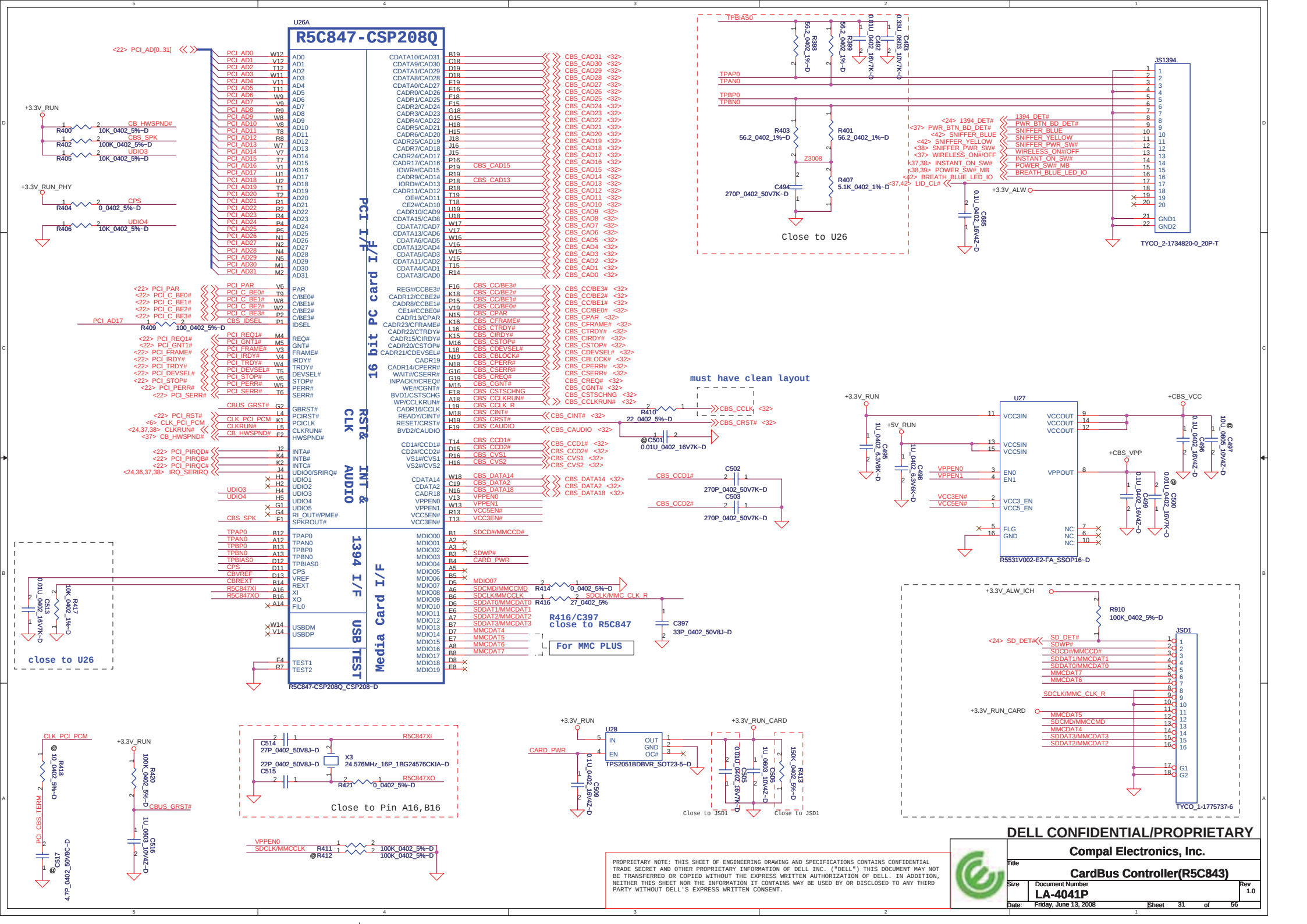

DELL CONFIDENTIAL/PROPRIETARY

Compal Electronics, Inc.

Title: CardBus Controller(R5C843)

Size | Document Number: LA-4041P | Rev: 1.0

Date: Friday, June 13, 2008 | Sheet 31 of 56

PROPRIETARY NOTE: THIS SHEET OF ENGINEERING DRAWING AND SPECIFICATIONS CONTAINS CONFIDENTIAL TRADE SECRET AND OTHER PROPRIETARY INFORMATION OF DELL INC. ("DELL") THIS DOCUMENT MAY NOT BE TRANSFERRED OR COPIED WITHOUT THE EXPRESS WRITTEN AUTHORIZATION OF DELL. IN ADDITION, NEITHER THIS SHEET NOR THE INFORMATION IT CONTAINS WAY BE USED BY OR DISCLOSED TO ANY THIRD PARTY WITHOUT DELL'S EXPRESS WRITTEN CONSENT.

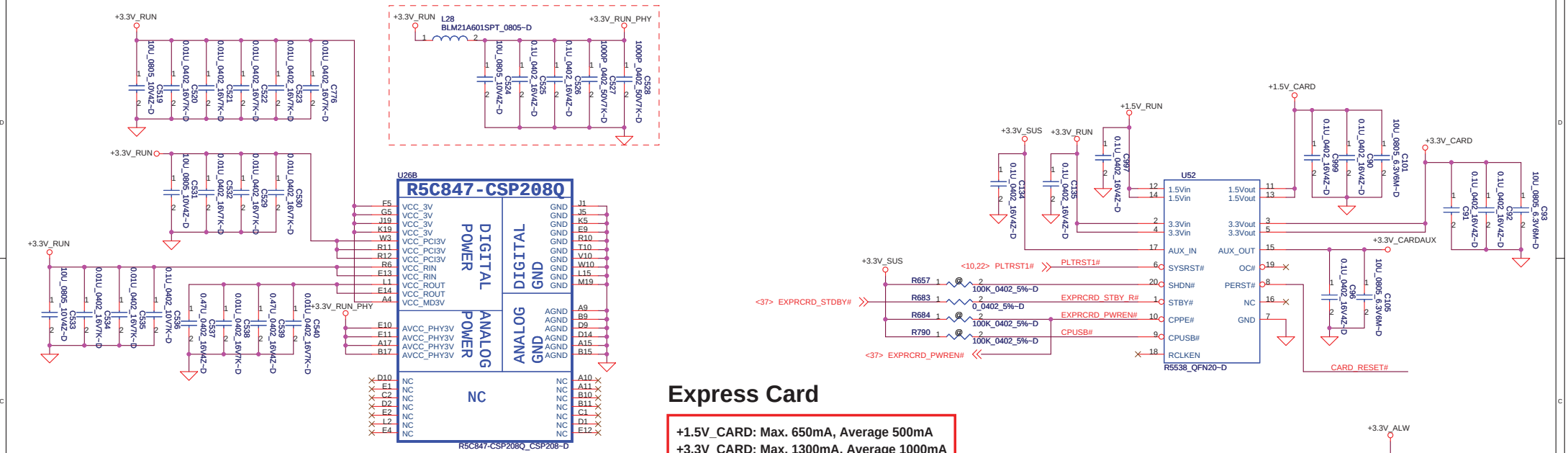

Express Card

+1.5V_CARD: Max. 650mA, Average 500mA
+3.3V_CARD: Max. 1300mA, Average 1000mA

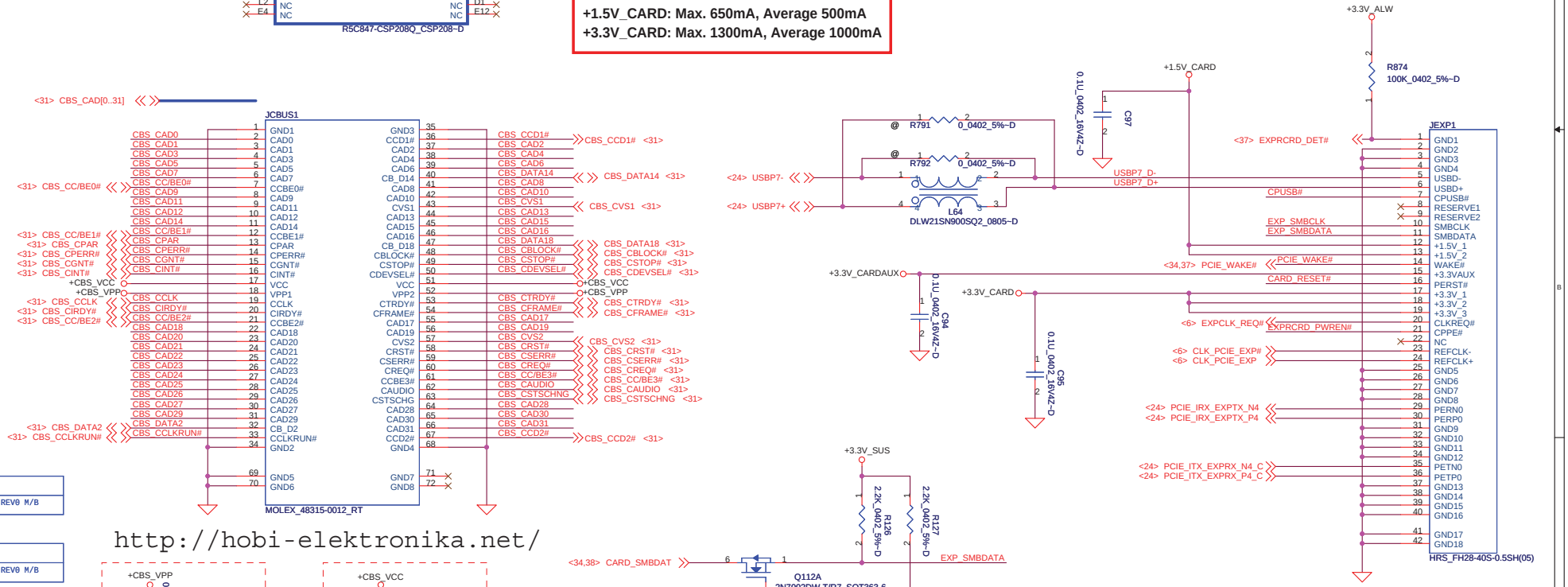

http://hobi-elektronika.net/

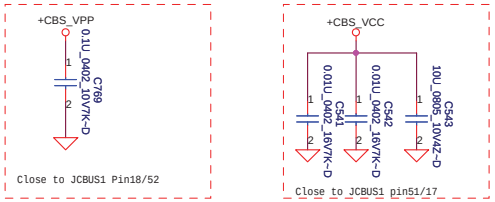

@ IO FPC

Part Number	Description
DAA00000R0L	PCB 03P LA-4051P REV0 M/B

@PCMCIA CAGE

Part Number	Description
DAA00000R0L	PCB 03P LA-4051P REV0 M/B

@ EXPRESS CAGE

Part Number	Description
DAA00000R0L	PCB 03P LA-4051P REV0 M/B

@ SD CABLE

Part Number	Description
DAA00000R0L	PCB 03P LA-4051P REV0 M/B

PROPRIETARY NOTE: THIS SHEET OF ENGINEERING DRAWING AND SPECIFICATIONS CONTAINS CONFIDENTIAL TRADE SECRET AND OTHER PROPRIETARY INFORMATION OF DELL INC. ("DELL") THIS DOCUMENT MAY NOT BE TRANSFERRED OR COPIED WITHOUT THE EXPRESS WRITTEN AUTHORIZATION OF DELL. IN ADDITION, NEITHER THIS SHEET NOR THE INFORMATION IT CONTAINS WAY BE USED BY OR DISCLOSED TO ANY THIRD PARTY WITHOUT DELL'S EXPRESS WRITTEN CONSENT.

DELL CONFIDENTIAL/PROPRIETARY

Compal Electronics, Inc.

Title: CardBus/SD card Socket

Size | Document Number: LA-4041P | Rev: 1.0

Date: Friday, June 13, 2008 | Sheet 32 of 56

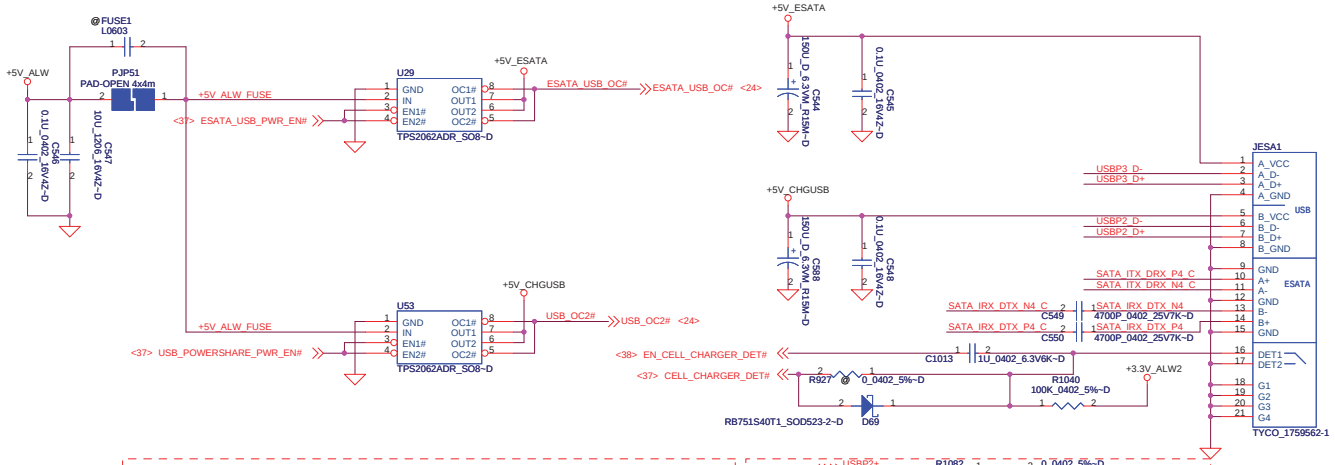

USB PORT#	DESTINATION
0	JUSB1 (Ext Right Side Top)
1	JUSB1 (Ext Right Side Bottom)
2	JESA1 (Ext Left Side Top)
3	JESA1 (Ext Left Side Bottom)
4	WLAN
5	WWAN
6	WPAN
7	Express card
8	DOCKING
9	DOCKING
10	USH->BIO
11	Camera

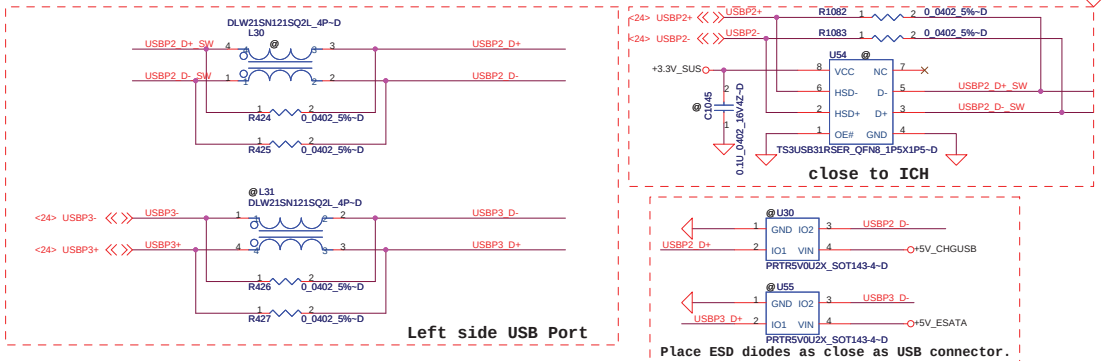

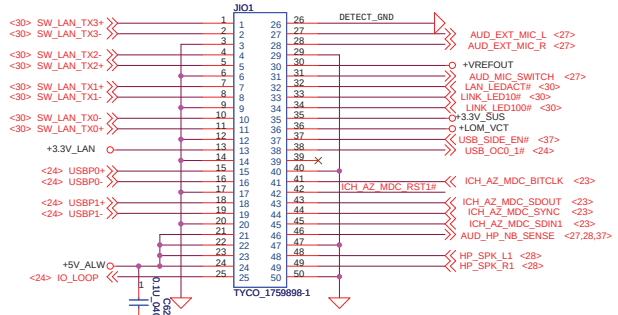

Equalizer Selection

SEL0_ [A:B]	SEL1_ [A:B]	Compliance Channel
0	0	no equalization
* 0	1	[0:2.5dB] @ 1.6 GHz
1	0	[2.5:4.5dB] @ 1.6 GHz
1	1	[4.5:6.5dB] @ 1.6 GHz

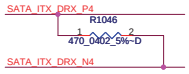

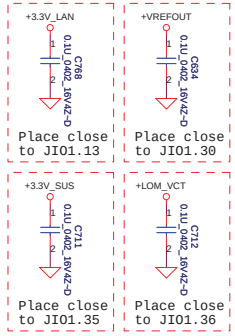

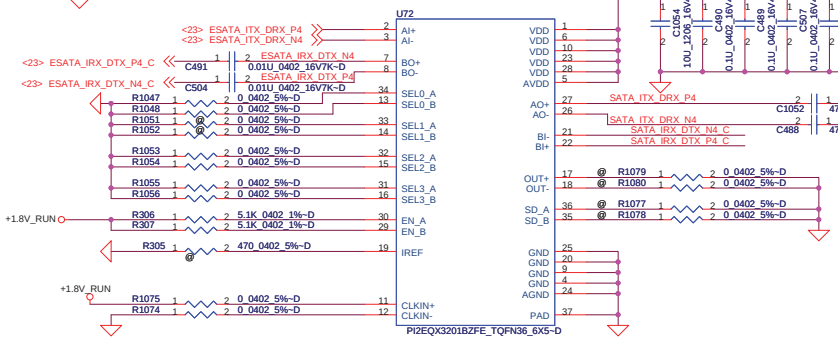

Output Swing Control

SEL2_ [A:B]	Swing
* 0	1x
1	1.2x

Output De-emphasis Adjustment

SEL3_ [A:B]	De-emphasis
* 0	0dB
1	-3.5dB

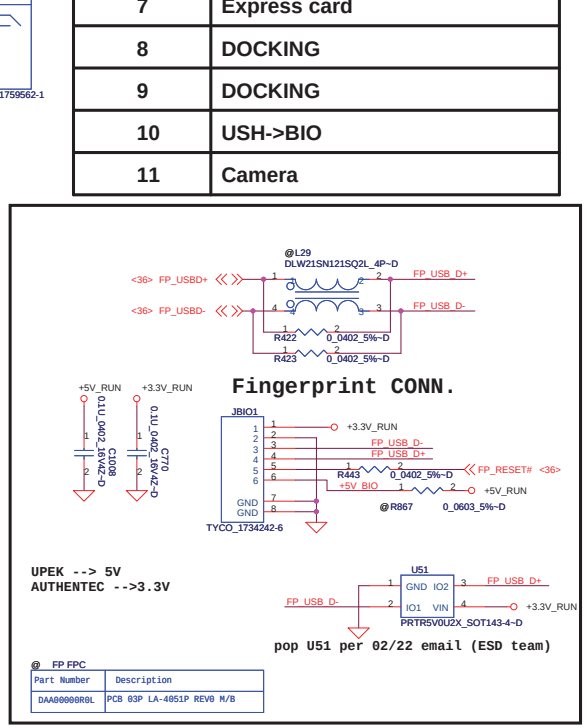

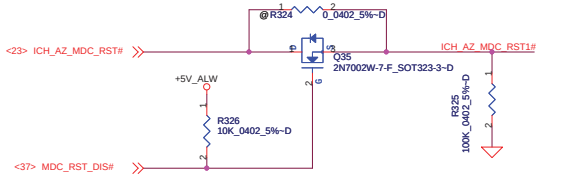

DELL CONFIDENTIAL/PROPRIETARY

@ RJ11 CABLE

Part Number	Description
DAA00000R0L	PCB 03P LA-4051P REV0 M/B

@ MDC FPC

Part Number	Description
DAA00000R0L	PCB 03P LA-4051P REV0 M/B

PROPRIETARY NOTE: THIS SHEET OF ENGINEERING DRAWING AND SPECIFICATIONS CONTAINS CONFIDENTIAL TRADE SECRET AND OTHER PROPRIETARY INFORMATION OF DELL INC. ("DELL") THIS DOCUMENT MAY NOT BE TRANSFERRED OR COPIED WITHOUT THE EXPRESS WRITTEN AUTHORIZATION OF DELL. IN ADDITION, NEITHER THIS SHEET NOR THE INFORMATION IT CONTAINS WAY BE USED BY OR DISCLOSED TO ANY THIRD PARTY WITHOUT DELL'S EXPRESS WRITTEN CONSENT.

Compal Electronics, Inc.

Title: USB 2.0 PORT

Size | Document Number: LA-4041P | Rev 1.0

Date: Friday, June 13, 2008 | Sheet 33 of 56

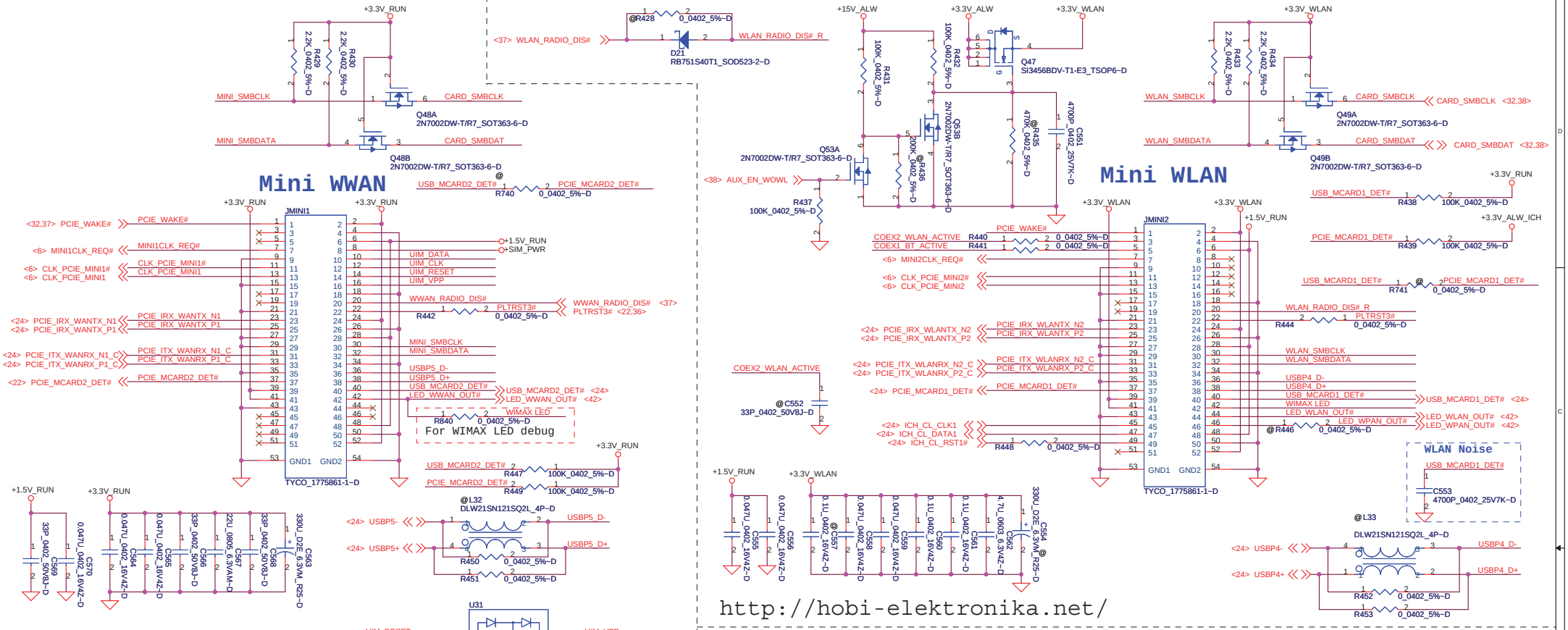

PWR Rail	Voltage Tolerance	Primary Power		Aux Power
		Peak	Normal	Normal
+3.3V	+-9%	1000	750	
+3.3Vaux	+-9%	330	250	250 (Wake enable) 5 (Not wake enable)
+1.5V	+-5%	500	375	NA

PROPRIETARY NOTE: THIS SHEET OF ENGINEERING DRAWING AND SPECIFICATIONS CONTAINS CONFIDENTIAL TRADE SECRET AND OTHER PROPRIETARY INFORMATION OF DELL INC. ("DELL") THIS DOCUMENT MAY NOT BE TRANSFERRED OR COPIED WITHOUT THE EXPRESS WRITTEN AUTHORIZATION OF DELL. IN ADDITION, NEITHER THIS SHEET NOR THE INFORMATION IT CONTAINS WAY BE USED BY OR DISCLOSED TO ANY THIRD PARTY WITHOUT DELL'S EXPRESS WRITTEN CONSENT.

DELL CONFIDENTIAL/PROPRIETARY

Compal Electronics, Inc.

Title: Mini Card

Size | Document Number: LA-4041P | Rev: 1.0

Date: Friday, June 13, 2008 | Sheet 34 of 56

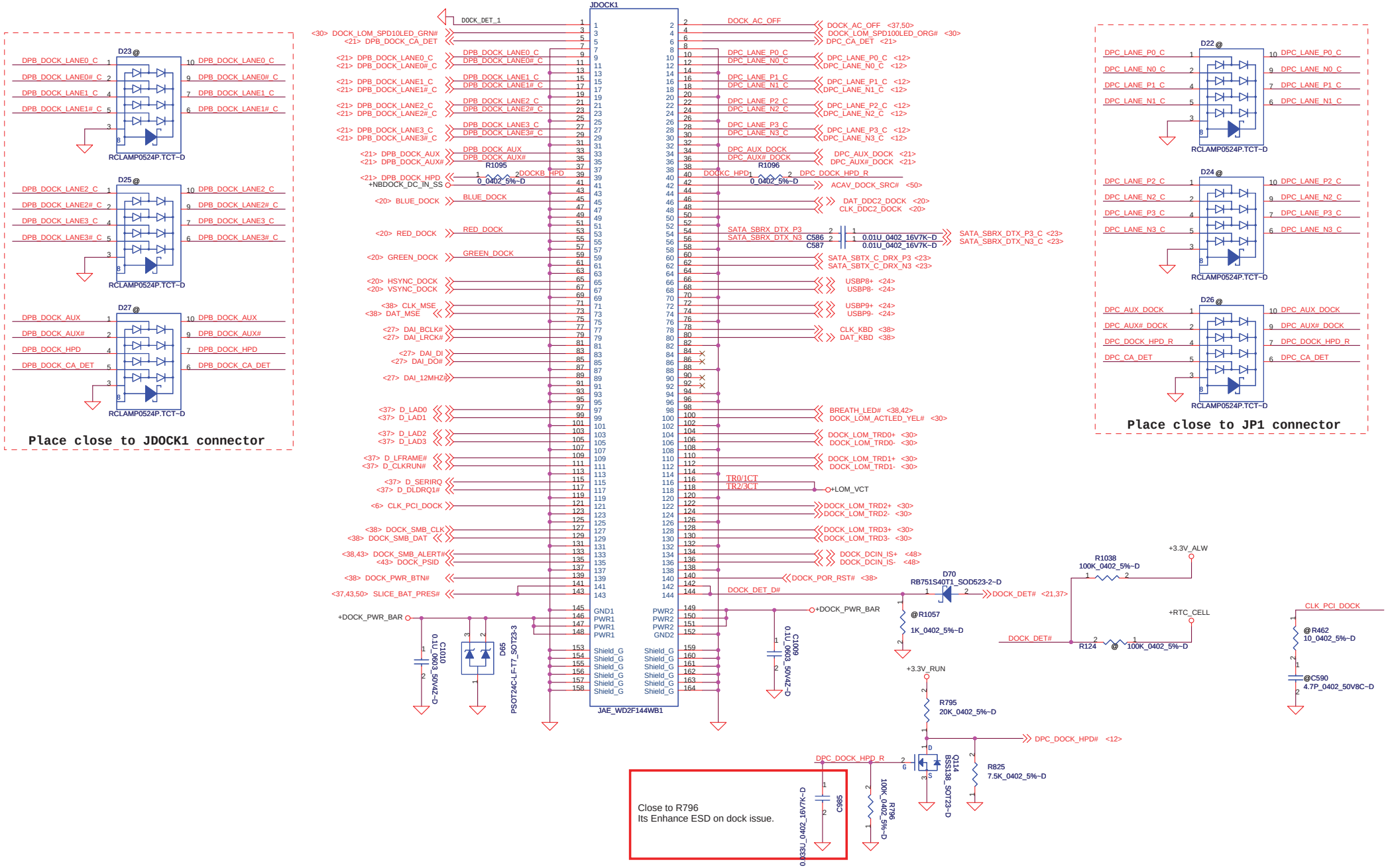

PROPRIETARY NOTE: THIS SHEET OF ENGINEERING DRAWING AND SPECIFICATIONS CONTAINS CONFIDENTIAL TRADE SECRET AND OTHER PROPRIETARY INFORMATION OF DELL INC. ("DELL") THIS DOCUMENT MAY NOT BE TRANSFERRED OR COPIED WITHOUT THE EXPRESS WRITTEN AUTHORIZATION OF DELL. IN ADDITION, NEITHER THIS SHEET NOR THE INFORMATION IT CONTAINS WAY BE USED BY OR DISCLOSED TO ANY THIRD PARTY WITHOUT DELL'S EXPRESS WRITTEN CONSENT.

Compal Electronics, Inc.		
Title: DOCKING CONN		
Size	Document Number: LA-4041P	Rev 1.0
Date: Friday, June 13, 2008	Sheet 35 of 56	

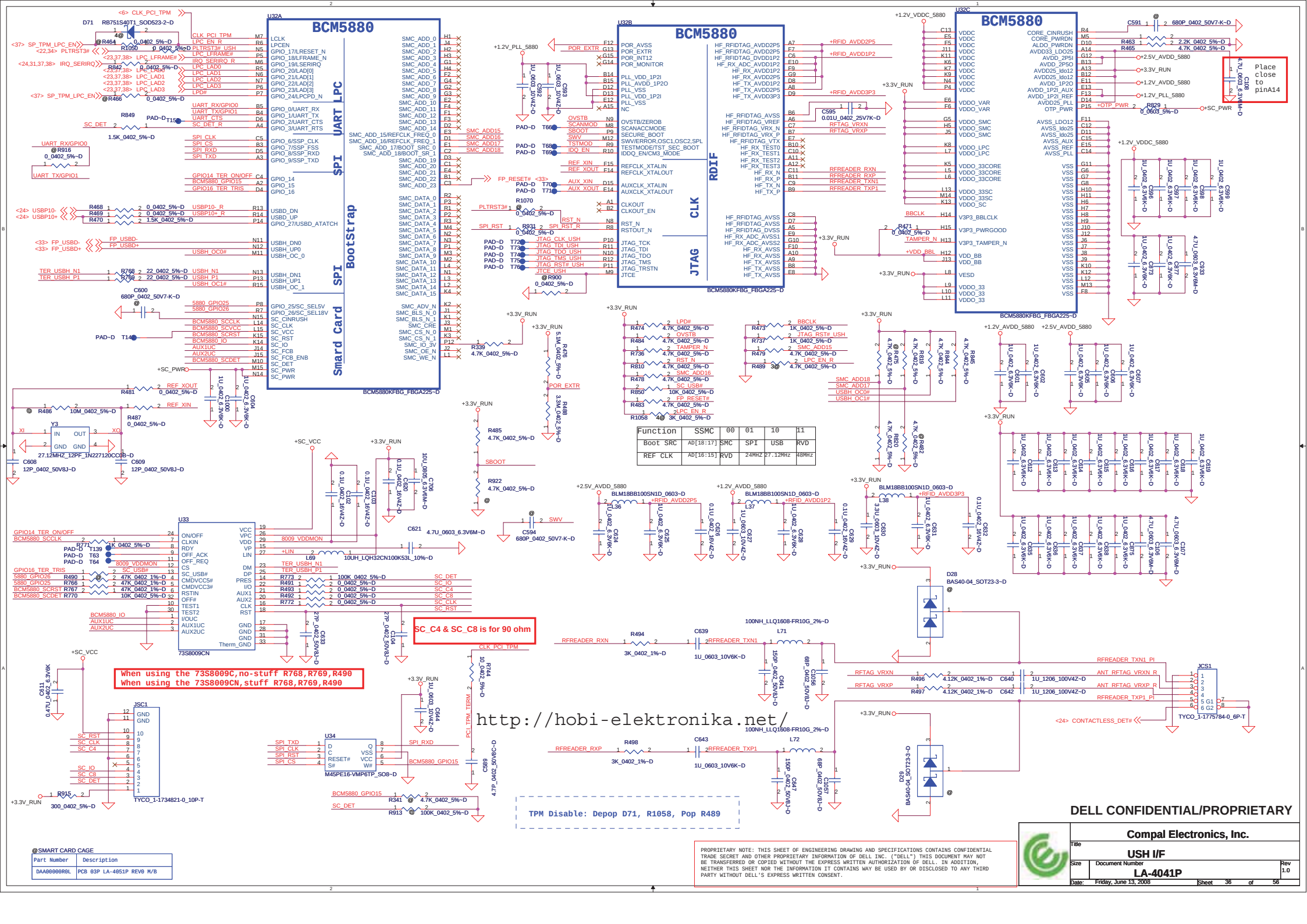

Function	SSMC	00	01	10	11
Boot SRC	AD[18:17]	SMC	SPI	USB	RVD
REF CLK	AD[16:15]	RVD	24MHZ	27.12MHz	48MHz

@SMART CARD CAGE

Part Number	Description
DAA00000R0L	PCB 03P LA-4051P REV0 M/B

PROPRIETARY NOTE: THIS SHEET OF ENGINEERING DRAWING AND SPECIFICATIONS CONTAINS CONFIDENTIAL TRADE SECRET AND OTHER PROPRIETARY INFORMATION OF DELL INC. ("DELL") THIS DOCUMENT MAY NOT BE TRANSFERRED OR COPIED WITHOUT THE EXPRESS WRITTEN AUTHORIZATION OF DELL. IN ADDITION, NEITHER THIS SHEET NOR THE INFORMATION IT CONTAINS WAY BE USED BY OR DISCLOSED TO ANY THIRD PARTY WITHOUT DELL'S EXPRESS WRITTEN CONSENT.

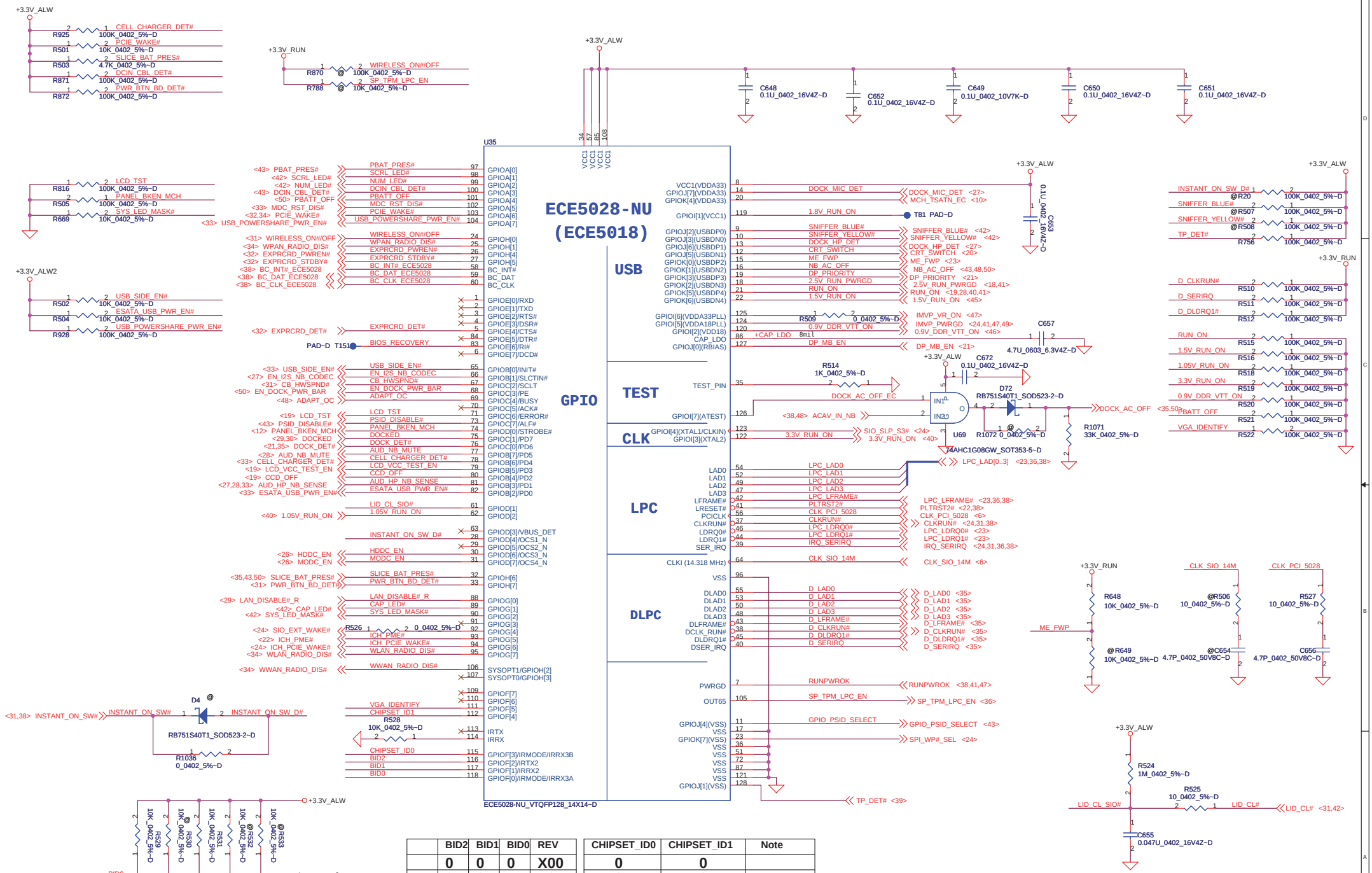

BID2	BID1	BID0	REV
0	0	0	X00
0	0	1	X01
0	1	0	X02
0	1	1	X03
1	0	0	X04
1	0	1	A00

CHIPSET_ID0	CHIPSET_ID1	Note
0	0	
0	0	

PROPRIETARY NOTE: THIS SHEET OF ENGINEERING DRAWING AND SPECIFICATIONS CONTAINS CONFIDENTIAL TRADE SECRET AND OTHER PROPRIETARY INFORMATION OF DELL INC. ("DELL") THIS DOCUMENT MAY NOT BE TRANSFERRED OR COPIED WITHOUT THE EXPRESS WRITTEN AUTHORIZATION OF DELL. IN ADDITION, NEITHER THIS SHEET NOR THE INFORMATION IT CONTAINS WAY BE USED BY OR DISCLOSED TO ANY THIRD PARTY WITHOUT DELL'S EXPRESS WRITTEN CONSENT.

DELL CONFIDENTIAL/PROPRIETARY

Compal Electronics, Inc.

Title: ECE5028

Size: | Document Number: LA-4041P | Rev: 1.0

Date: Friday, June 13, 2008 | Sheet 37 of 56

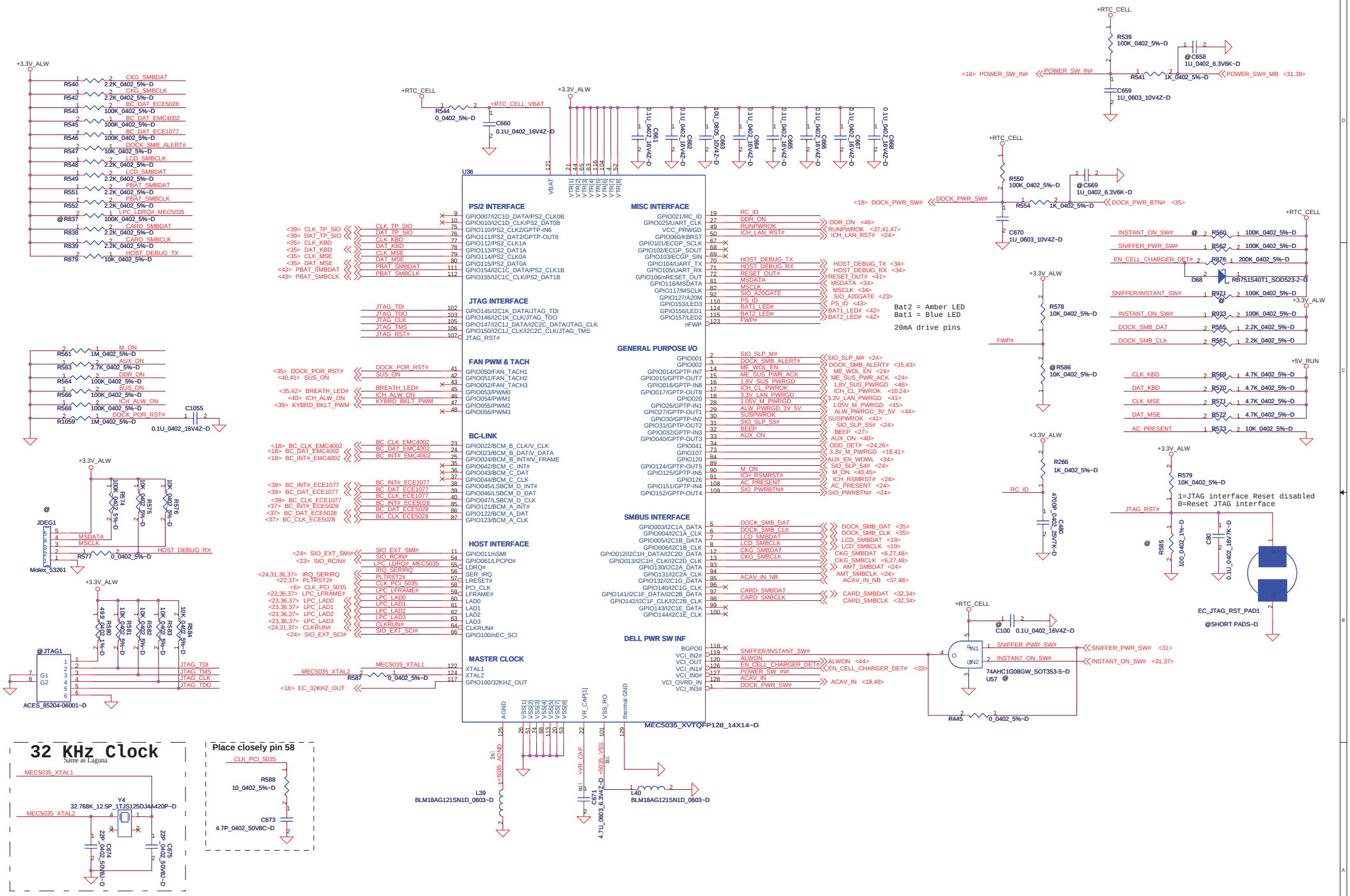
U36
MEC5035_XVTQFP128_14X14~D
PS/2 INTERFACE
JTAG INTERFACE
FAN PWM & TACH
BC-LINK
HOST INTERFACE
MASTER CLOCK
MISC INTERFACE
GENERAL PURPOSE I/O
SMBUS INTERFACE
DELL PWR SW INF
Bat2 = Amber LED
Bat1 = Blue LED
20mA drive pins
1=JTAG interface Reset disabled
0=Reset JTAG interface
32 KHz Clock
Same as Laguna
Place closely pin 58
DELL CONFIDENTIAL/PROPRIETARY
Compal Electronics, Inc.
EMC5035
LA-4041P
Rev 1.0
Friday, June 13, 2008
Sheet 38 of 56

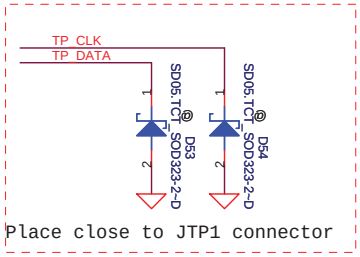

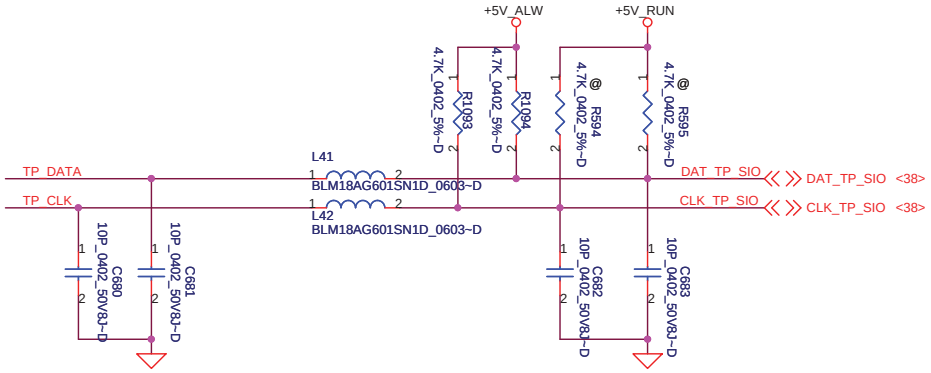

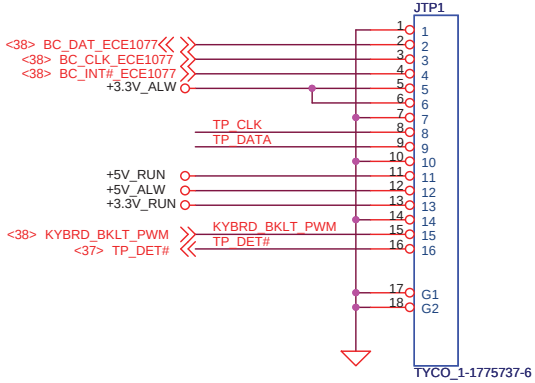

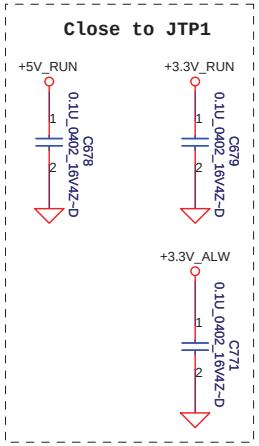

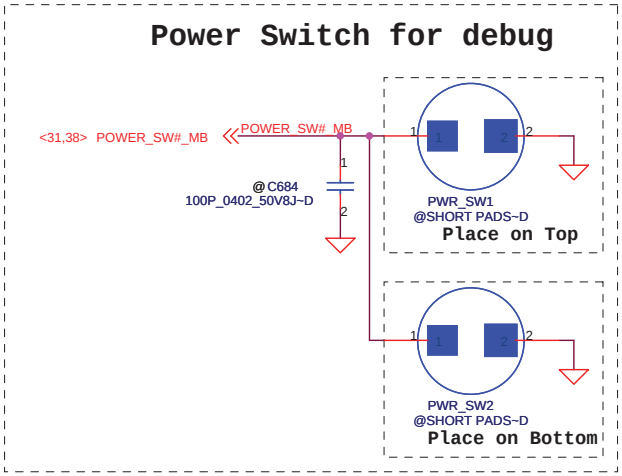

http://hobi-elektronika.net/

DELL CONFIDENTIAL/PROPRIETARY

PROPRIETARY NOTE: THIS SHEET OF ENGINEERING DRAWING AND SPECIFICATIONS CONTAINS CONFIDENTIAL TRADE SECRET AND OTHER PROPRIETARY INFORMATION OF DELL INC. ("DELL") THIS DOCUMENT MAY NOT BE TRANSFERRED OR COPIED WITHOUT THE EXPRESS WRITTEN AUTHORIZATION OF DELL. IN ADDITION, NEITHER THIS SHEET NOR THE INFORMATION IT CONTAINS WAY BE USED BY OR DISCLOSED TO ANY THIRD PARTY WITHOUT DELL'S EXPRESS WRITTEN CONSENT.

Compal Electronics, Inc.		
Title: Touch PAD/Int KB/LID		
Size	Document Number: LA-4041P	Rev 1.0
Date: Friday, June 13, 2008	Sheet 39 of 56	

DC/DC Interface

+3.3V_ALW_ICH Source

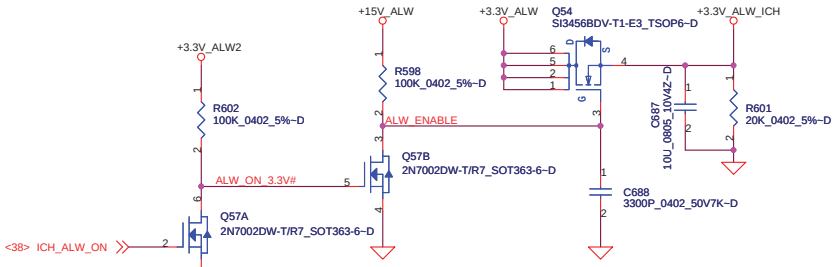

+3.3V_SUS Source

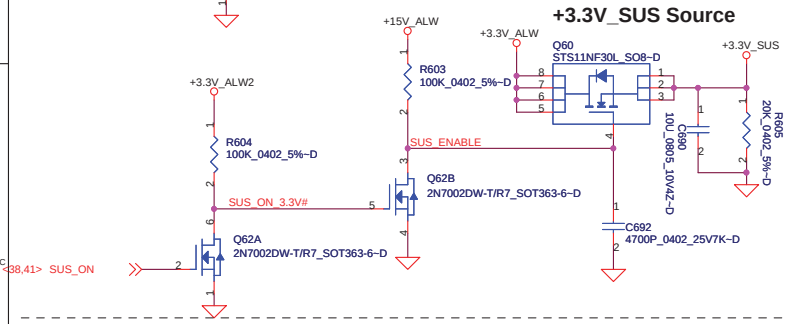

+3.3VM Source

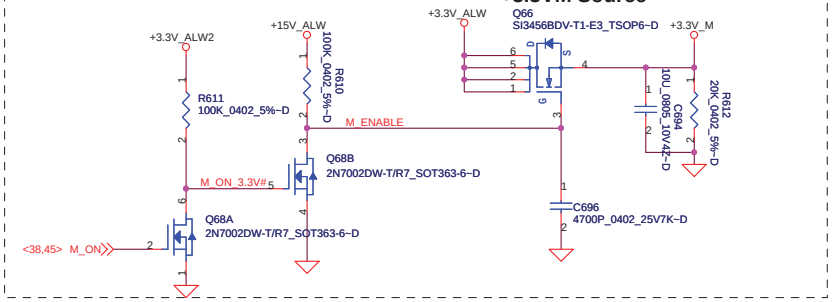

Discharge Circuit

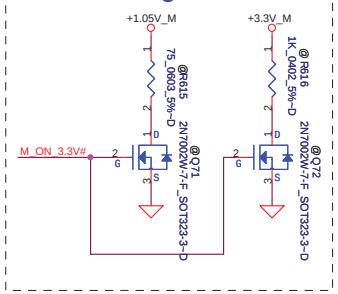

+5VRUN Source

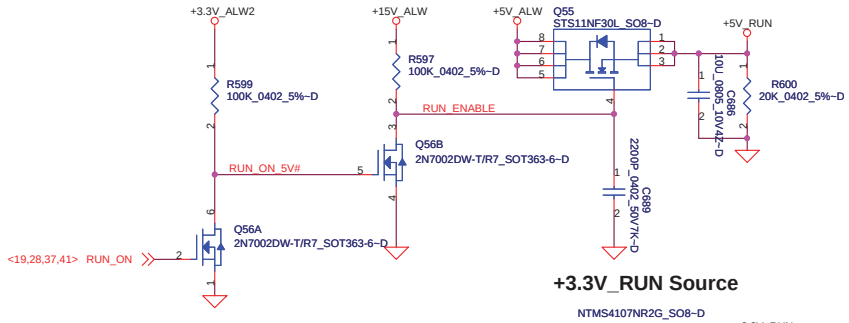

+3.3V_RUN Source

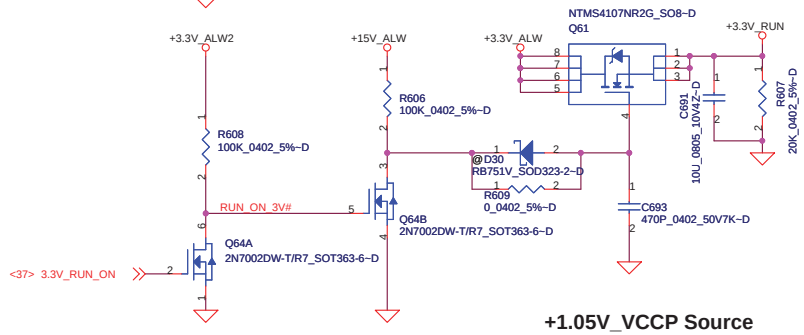

+1.05V_VCCP Source

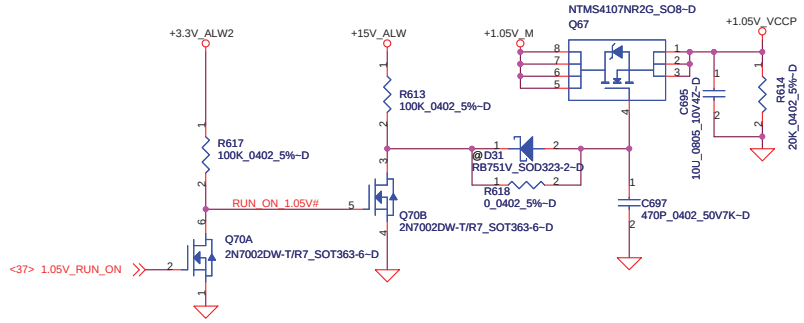

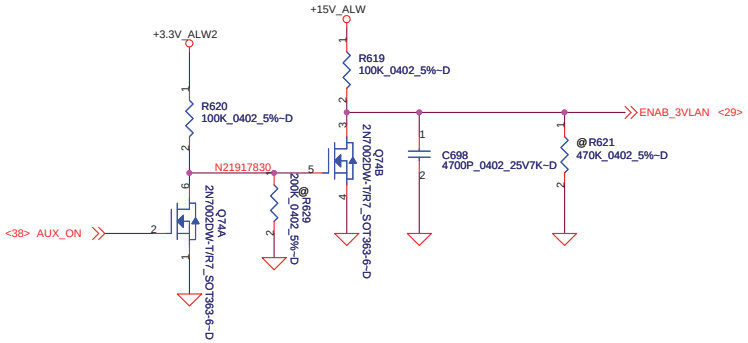

Discharge Circuit

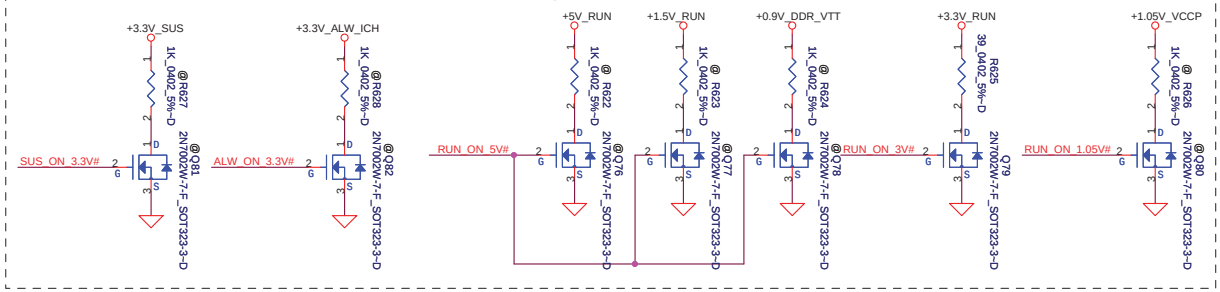

PROPRIETARY NOTE: THIS SHEET OF ENGINEERING DRAWING AND SPECIFICATIONS CONTAINS CONFIDENTIAL TRADE SECRET AND OTHER PROPRIETARY INFORMATION OF DELL INC. ("DELL") THIS DOCUMENT MAY NOT BE TRANSFERRED OR COPIED WITHOUT THE EXPRESS WRITTEN AUTHORIZATION OF DELL. IN ADDITION, NEITHER THIS SHEET NOR THE INFORMATION IT CONTAINS WAY BE USED BY OR DISCLOSED TO ANY THIRD PARTY WITHOUT DELL'S EXPRESS WRITTEN CONSENT.

DELL CONFIDENTIAL/PROPRIETARY

Compal Electronics, Inc.

Title: POWER CONTROL

Size: | Document Number: LA-4041P | Rev: 1.0

Date: Friday, June 13, 2008 | Sheet 40 of 56

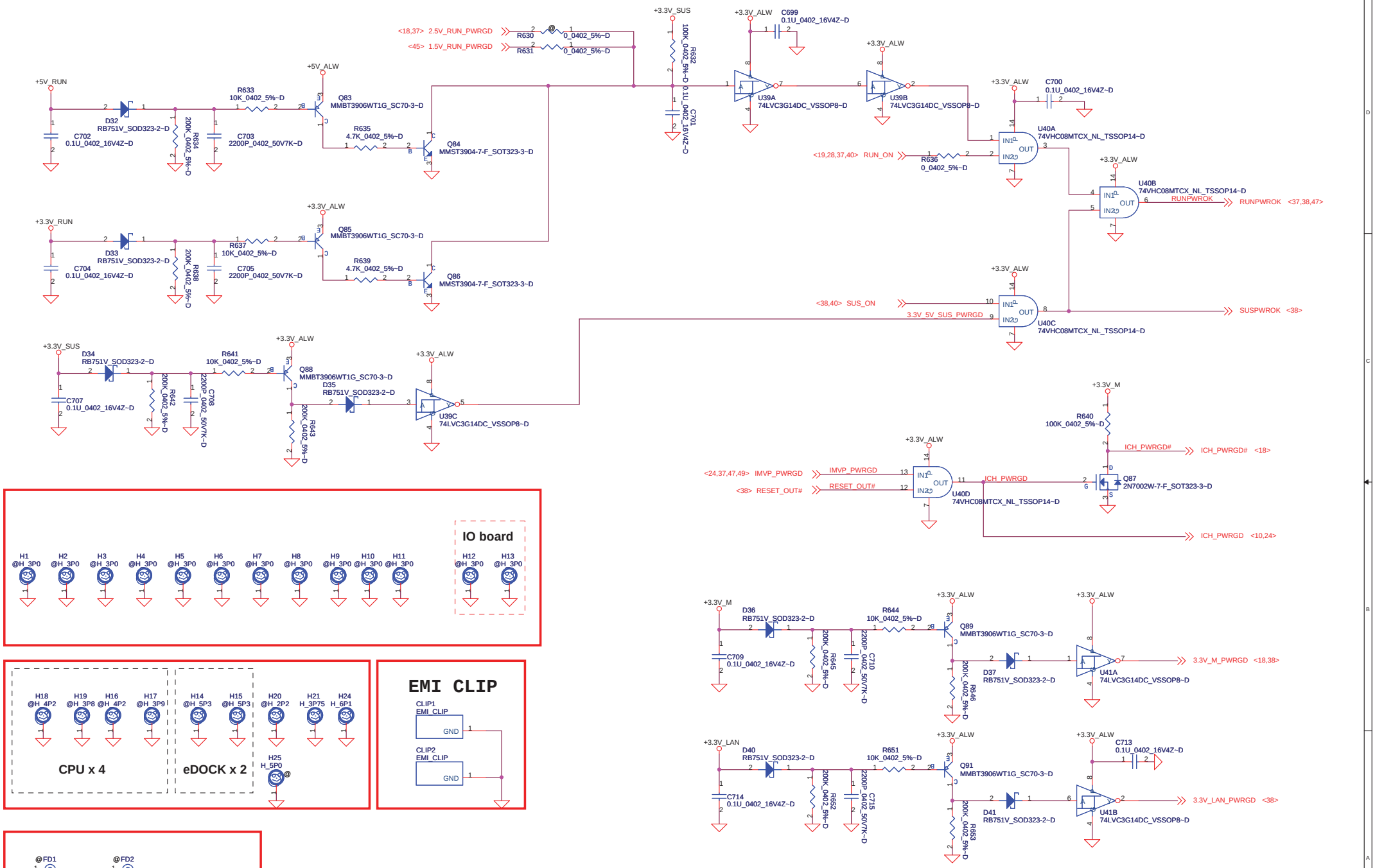

PROPRIETARY NOTE: THIS SHEET OF ENGINEERING DRAWING AND SPECIFICATIONS CONTAINS CONFIDENTIAL TRADE SECRET AND OTHER PROPRIETARY INFORMATION OF DELL INC. ("DELL") THIS DOCUMENT MAY NOT BE TRANSFERRED OR COPIED WITHOUT THE EXPRESS WRITTEN AUTHORIZATION OF DELL. IN ADDITION, NEITHER THIS SHEET NOR THE INFORMATION IT CONTAINS WAY BE USED BY OR DISCLOSED TO ANY THIRD PARTY WITHOUT DELL'S EXPRESS WRITTEN CONSENT.

DELL CONFIDENTIAL/PROPRIETARY

Compal Electronics, Inc.	
Title	Power Sequence & ME Part
Size	Document Number: LA-4041P
Rev	1.0
Date: Friday, June 13, 2008	Sheet 41 of 56

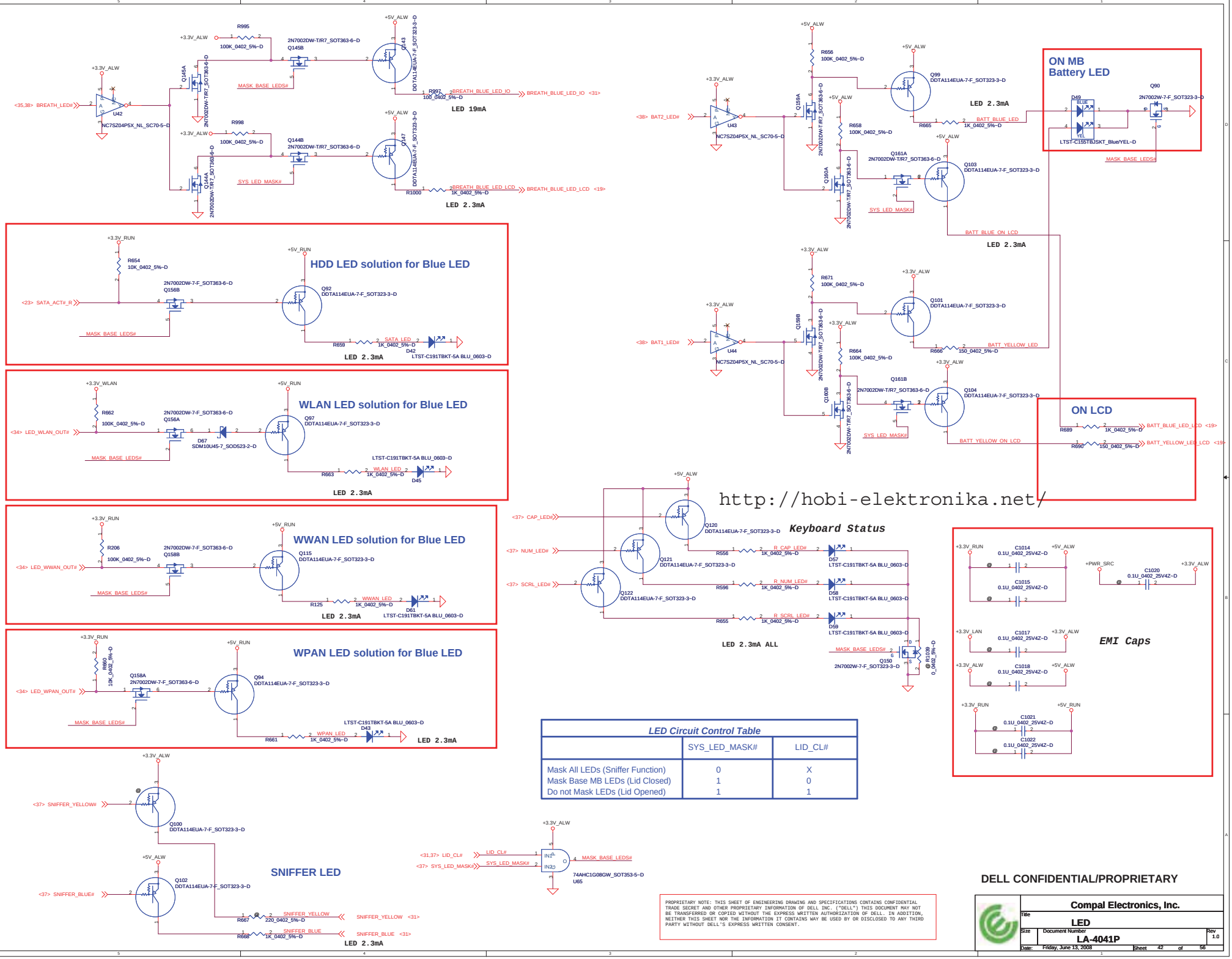
LED 19mA
LED 2.3mA
ON MB Battery LED
HDD LED solution for Blue LED
WLAN LED solution for Blue LED
WWAN LED solution for Blue LED
WPAN LED solution for Blue LED
ON LCD
http://hobi-elektronika.net/
Keyboard Status
LED 2.3mA ALL
EMI Caps
SNIFFER LED
LED Circuit Control Table
SYS_LED_MASK#
LID_CL#
Mask All LEDs (Sniffer Function)
Mask Base MB LEDs (Lid Closed)
Do not Mask LEDs (Lid Opened)
DELL CONFIDENTIAL/PROPRIETARY
Compal Electronics, Inc.
LED
LA-4041P
Friday, June 13, 2008
Sheet 42 of 56

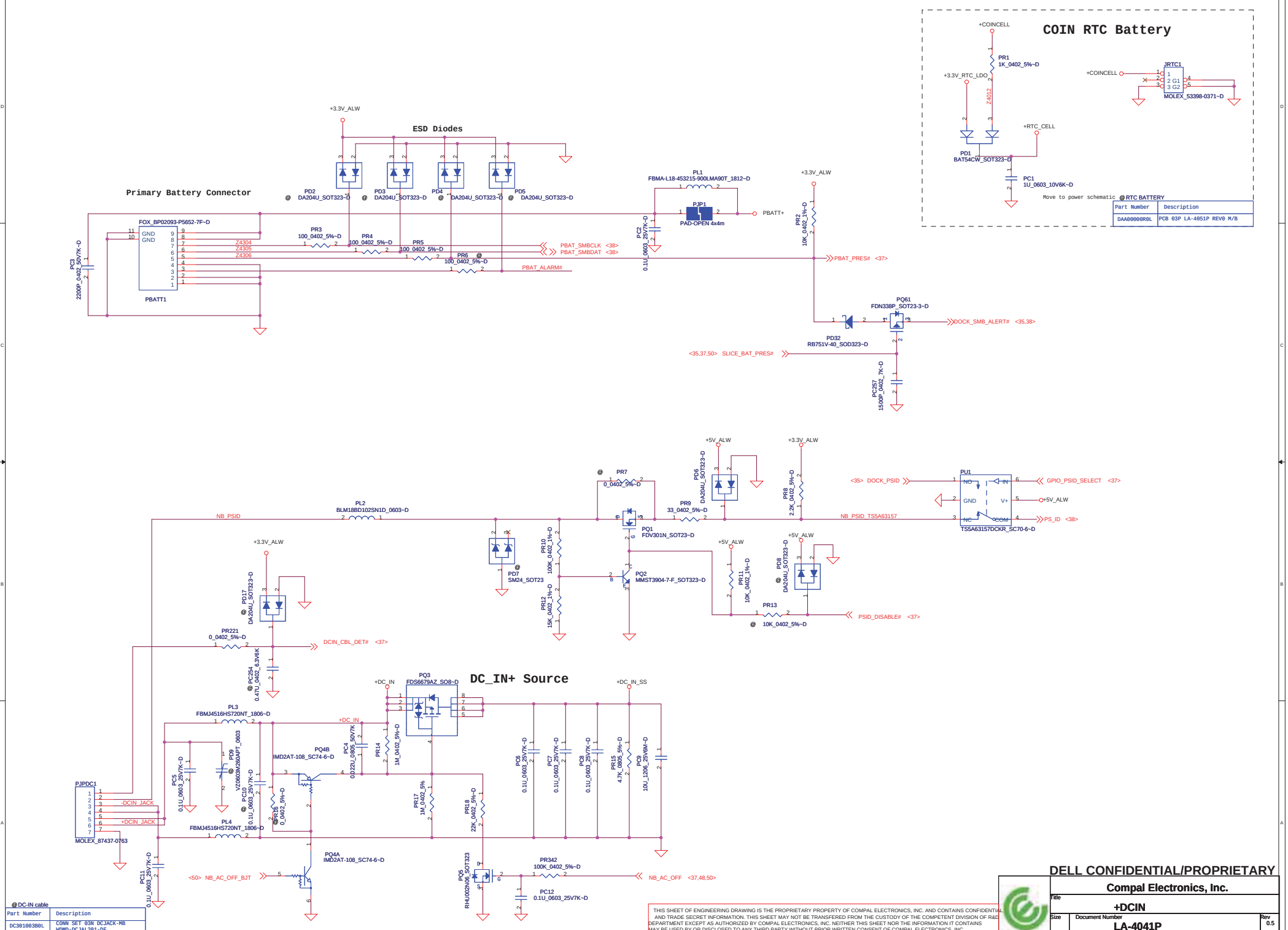

THIS SHEET OF ENGINEERING DRAWING IS THE PROPRIETARY PROPERTY OF COMPAL ELECTRONICS, INC. AND CONTAINS CONFIDENTIAL AND TRADE SECRET INFORMATION. THIS SHEET MAY NOT BE TRANSFERED FROM THE CUSTODY OF THE COMPETENT DIVISION OF R&D DEPARTMENT EXCEPT AS AUTHORIZED BY COMPAL ELECTRONICS, INC. NEITHER THIS SHEET NOR THE INFORMATION IT CONTAINS MAY BE USED BY OR DISCLOSED TO ANY THIRD PARTY WITHOUT PRIOR WRITTEN CONSENT OF COMPAL ELECTRONICS, INC.

+3.3V_ALWP/ +5V_ALWP/ +5V_ALW2 / +15V_ALWP

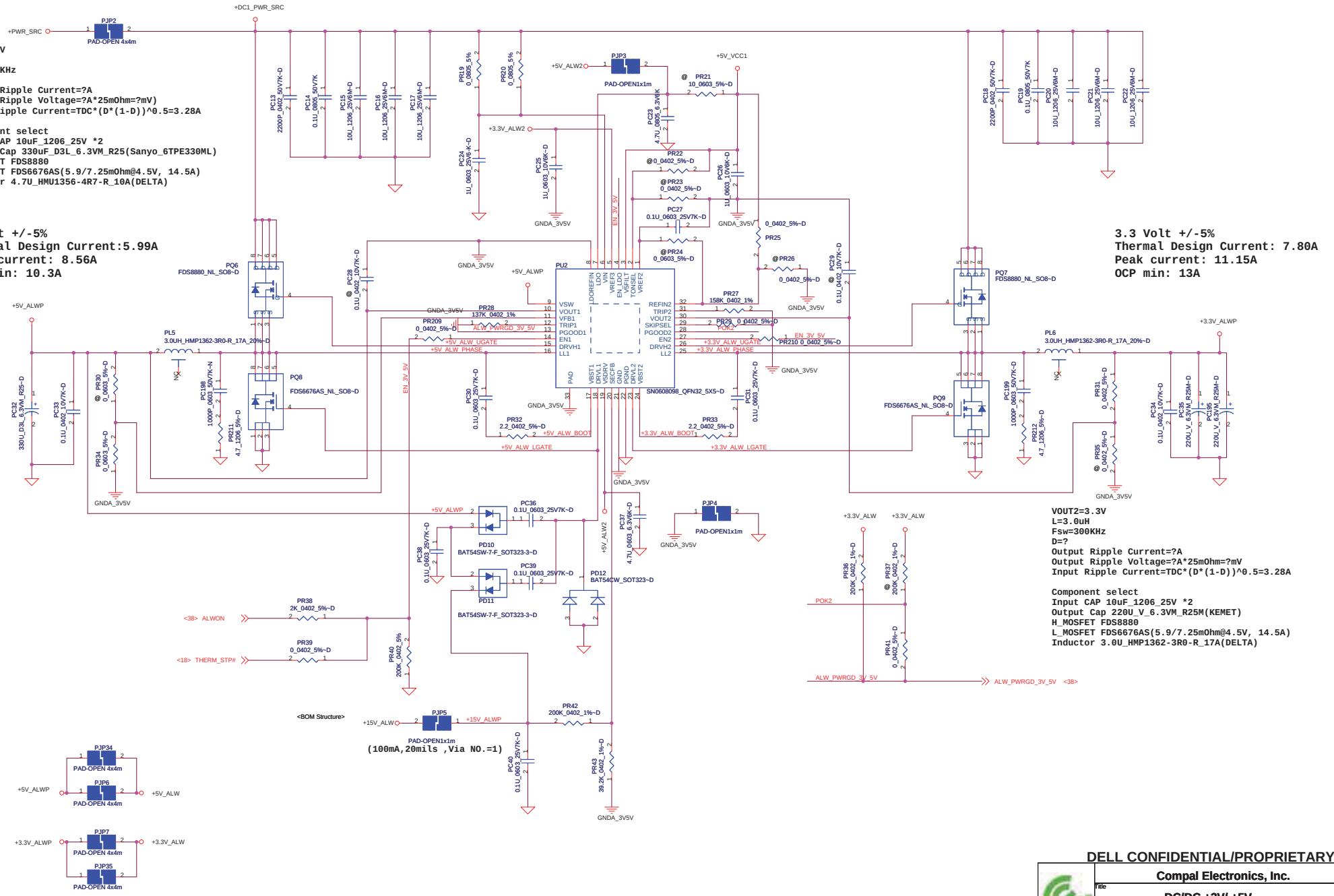

DELL CONFIDENTIAL/PROPRIETARY

THIS SHEET OF ENGINEERING DRAWING IS THE PROPRIETARY PROPERTY OF COMPAL ELECTRONICS, INC. AND CONTAINS CONFIDENTIAL AND TRADE SECRET INFORMATION. THIS SHEET MAY NOT BE TRANSFERED FROM THE CUSTODY OF THE COMPETENT DIVISION OF R&D DEPARTMENT EXCEPT AS AUTHORIZED BY COMPAL ELECTRONICS, INC. NEITHER THIS SHEET NOR THE INFORMATION IT CONTAINS

Compal Electronics, Inc.			
Title	DC/DC +3V/ +5V		
Size	Document Number LA-4041P		Rev 0.5
Date: Friday, June 13, 2008	Sheet 44 of 56		

+1.5V_RUN / +1.05V_M/ +3.3V_RTC_LDO

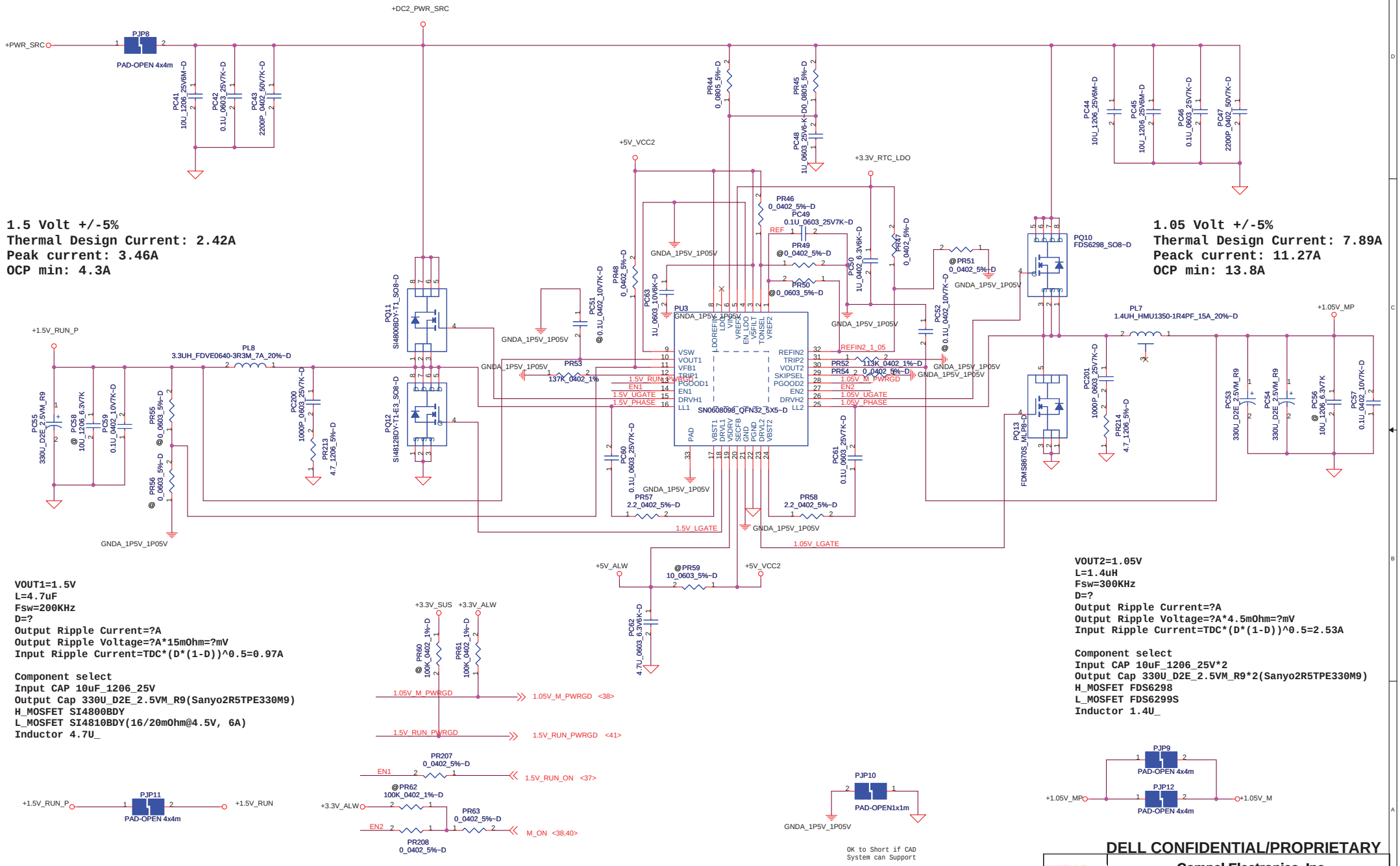

VOUT1=1.5V
L=4.7uF
Fsw=200KHz
D=?
Output Ripple Current=?A
Output Ripple Voltage=?A*15mOhm=?mV
Input Ripple Current=TDC*(D*(1-D))^0.5=0.97A

Component select
Input CAP 10uF_1206_25V
Output Cap 330U_D2E_2.5VM_R9(Sanyo2R5TPE330M9)
H_MOSFET SI4800BDY
L_MOSFET SI4810BDY(16/20mOhm@4.5V, 6A)
Inductor 4.7U_

VOUT2=1.05V
L=1.4uH
Fsw=300KHz
D=?
Output Ripple Current=?A
Output Ripple Voltage=?A*4.5mOhm=?mV
Input Ripple Current=TDC*(D*(1-D))^0.5=2.53A

Component select
Input CAP 10uF_1206_25V*2
Output Cap 330U_D2E_2.5VM_R9*2(Sanyo2R5TPE330M9)
H_MOSFET FDS6298
L_MOSFET FDS6299S
Inductor 1.4U_

OK to Short if CAD
System can Support

PROPRIETARY NOTE: THIS SHEET OF ENGINEERING DRAWING AND SPECIFICATIONS CONTAINS CONFIDENTIAL TRADE SECRET AND OTHER PROPRIETARY INFORMATION OF DELL INC. ("DELL") THIS DOCUMENT MAY NOT BE TRANSFERRED OR COPIED WITHOUT THE EXPRESS WRITTEN AUTHORIZATION OF DELL. IN ADDITION, NEITHER THIS SHEET NOR THE INFORMATION IT CONTAINS WAY BE USED BY OR DISCLOSED TO ANY THIRD PARTY WITHOUT DELL'S EXPRESS WRITTEN CONSENT.

THIS SHEET OF ENGINEERING DRAWING IS THE PROPRIETARY PROPERTY OF COMPAL ELECTRONICS, INC. AND CONTAINS CONFIDENTIAL AND TRADE SECRET INFORMATION. THIS SHEET MAY NOT BE TRANSFERED FROM THE CUSTODY OF THE COMPETENT DIVISION OF R&D DEPARTMENT EXCEPT AS AUTHORIZED BY COMPAL ELECTRONICS, INC. NEITHER THIS SHEET NOR THE INFORMATION IT CONTAINS

DELL CONFIDENTIAL/PROPRIETARY

Compal Electronics, Inc.		
Title: +1.5V_RUN / +1.05V_VCCP		
Size	Document Number: LA-4041P	Rev 0.5
Date: Friday, June 13, 2008	Sheet 45 of 56	

+1.8VSUSP/ +0.9V_DDR_VTT

DDR2 Termination

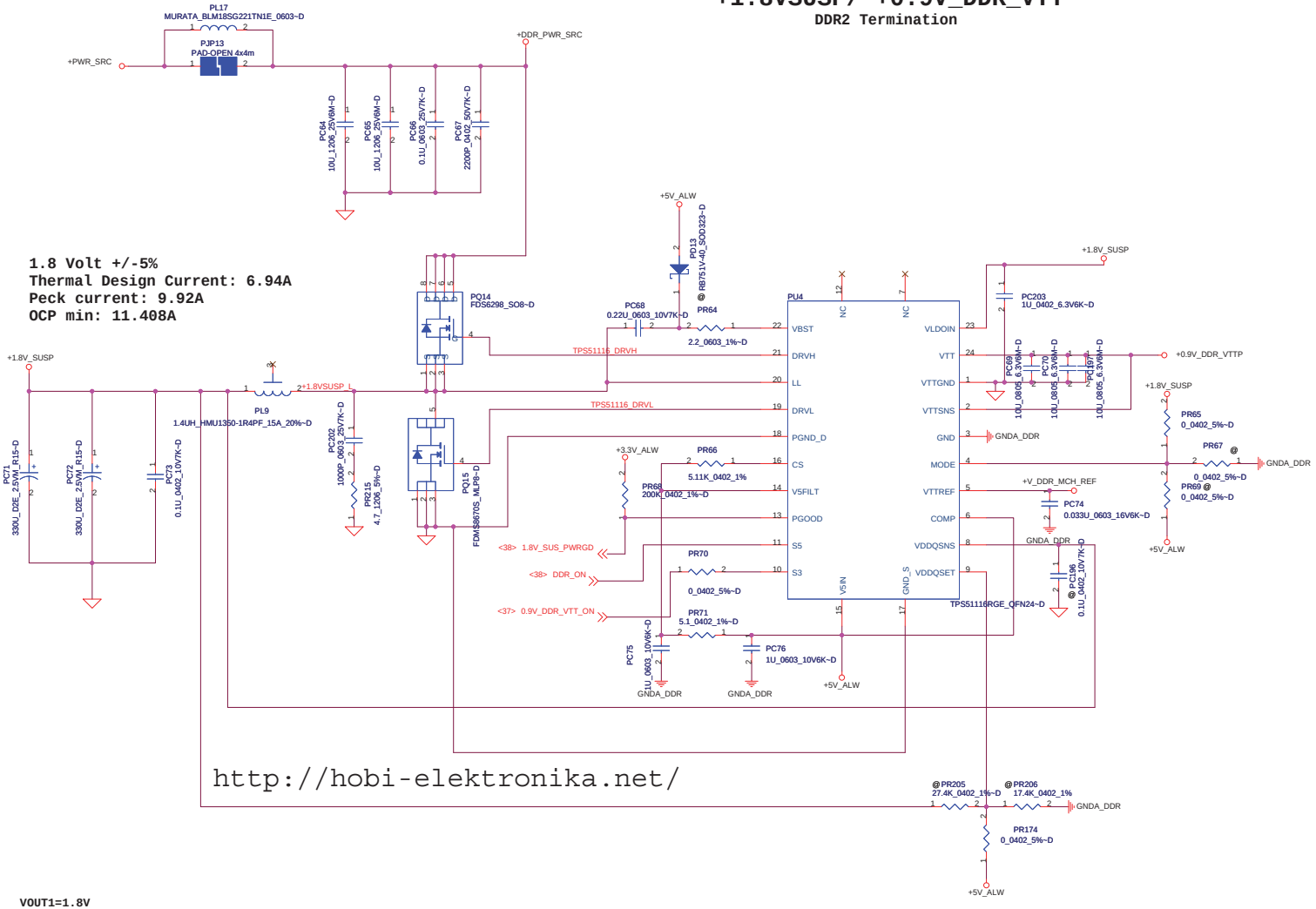

1.8 Volt +/-5%
Thermal Design Current: 6.94A
Peck current: 9.92A
OCP min: 11.408A

Design current 0.7A for +0.9V_DDR_VTTP
Peak current 1A for +0.9V_DDR_VTTP

http://hobi-elektronika.net/

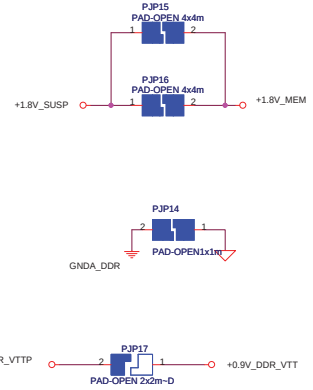

VOUT1=1.8V
L=1.4uH
Fsw=400KHz
D=?
Output Ripple Current=?A
Output Ripple Voltage=?A*15mOhm=?mV
Input Ripple Current=TDC*(D*(1-D))^0.5=0.97A

Component select
Input CAP 10uF_1206_25V
Output Cap 330U_D2E_2.5VM_R9*2(Sanyo2R5TPE330M9)
H_MOSFET FDS6298
L_MOSFET FDS6299S
Inductor 1.4U_

PROPRIETARY NOTE: THIS SHEET OF ENGINEERING DRAWING AND SPECIFICATIONS CONTAINS CONFIDENTIAL TRADE SECRET AND OTHER PROPRIETARY INFORMATION OF DELL INC. ("DELL") THIS DOCUMENT MAY NOT BE TRANSFERRED OR COPIED WITHOUT THE EXPRESS WRITTEN AUTHORIZATION OF DELL. IN ADDITION, NEITHER THIS SHEET NOR THE INFORMATION IT CONTAINS WAY BE USED BY OR DISCLOSED TO ANY THIRD PARTY WITHOUT DELL'S EXPRESS WRITTEN CONSENT.

DELL CONFIDENTIAL/PROPRIETARY

Compal Electronics, Inc.		
Title: 1.8VSUSP/0.9VDDR		
Size	Document Number: LA-4041P	Rev: 0.5
Date: Friday, June 13, 2008	Sheet 46 of 56	

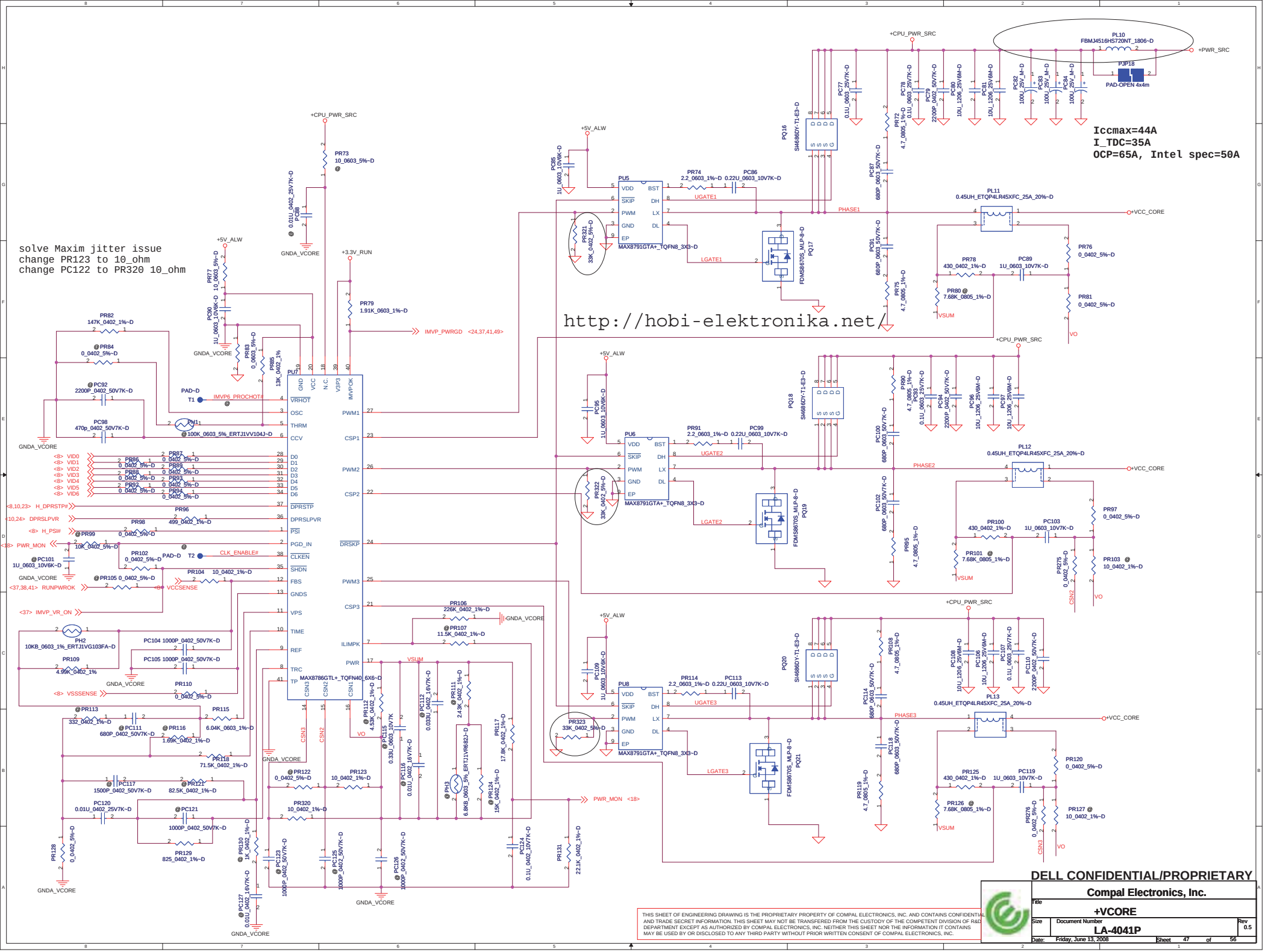

DELL CONFIDENTIAL/PROPRIETARY

Compal Electronics, Inc.

Title: +VCORE

Size | Document Number: LA-4041P | Rev: 0.5

Date: Friday, June 13, 2008 | Sheet 47 of 56

THIS SHEET OF ENGINEERING DRAWING IS THE PROPRIETARY PROPERTY OF COMPAL ELECTRONICS, INC. AND CONTAINS CONFIDENTIAL AND TRADE SECRET INFORMATION. THIS SHEET MAY NOT BE TRANSFERED FROM THE CUSTODY OF THE COMPETENT DIVISION OF R&D DEPARTMENT EXCEPT AS AUTHORIZED BY COMPAL ELECTRONICS, INC. NEITHER THIS SHEET NOR THE INFORMATION IT CONTAINS MAY BE USED BY OR DISCLOSED TO ANY THIRD PARTY WITHOUT PRIOR WRITTEN CONSENT OF COMPAL ELECTRONICS, INC.

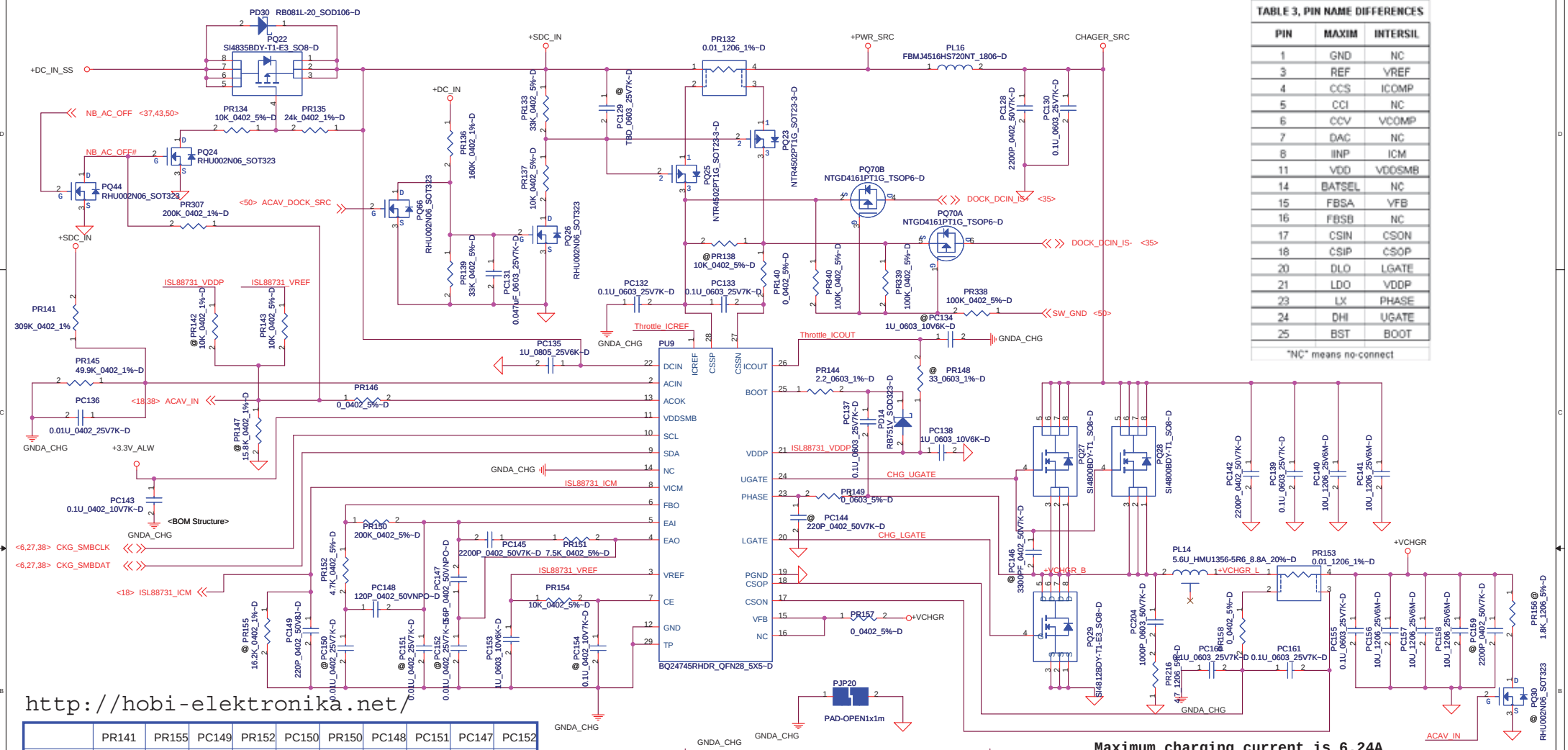

TABLE 3, PIN NAME DIFFERENCES		
PIN	MAXIM	INTERSIL
1	GND	NC
3	REF	VREF
4	CCS	ICOMP
5	CCI	NC
6	CCV	VCOMP
7	DAC	NC
8	IINP	ICM
11	VDD	VDDSMB
14	BATSEL	NC
15	FBSA	VFB
16	FBSB	NC
17	CSIN	CSON
18	CSIP	CSOP
20	DLO	LGATE
21	LDO	VDDP
23	LX	PHASE
24	DHI	UGATE
25	BST	BOOT

"NC" means no-connect

http://hobi-elektronika.net/

	PR141	PR155	PC149	PR152	PC150	PR150	PC148	PC151	PC147	PC152
TI	309K	@	220p	4.7K	@			@		@
Maxim	365K		0.1u	10K		@	@		@	

Maximum charging current is 6.24A

	PC145	PR151	PR154	PC154	PC132	PC133	PR138	PC134	PR148
TI				@			@	@	@
Maxim	@	@	@		@	@			

	PC144	PR157	PC160	PC161
TI	@	0		
Maxim		100	@	@

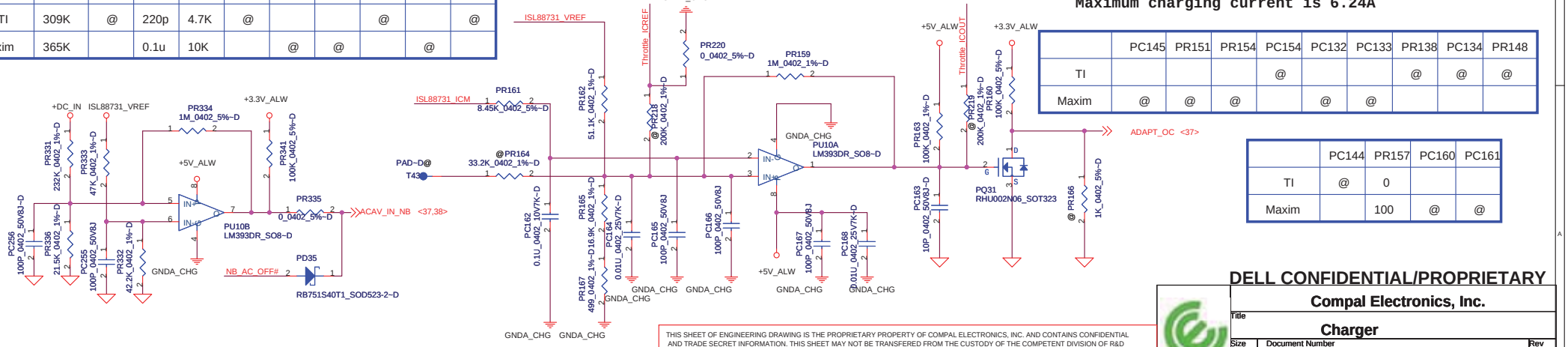

THIS SHEET OF ENGINEERING DRAWING IS THE PROPRIETARY PROPERTY OF COMPAL ELECTRONICS, INC. AND CONTAINS CONFIDENTIAL AND TRADE SECRET INFORMATION. THIS SHEET MAY NOT BE TRANSFERED FROM THE CUSTODY OF THE COMPETENT DIVISION OF R&D DEPARTMENT EXCEPT AS AUTHORIZED BY COMPAL ELECTRONICS, INC. NEITHER THIS SHEET NOR THE INFORMATION IT CONTAINS MAY BE USED BY OR DISCLOSED TO ANY THIRD PARTY WITHOUT PRIOR WRITTEN CONSENT OF COMPAL ELECTRONICS, INC.

DELL CONFIDENTIAL/PROPRIETARY

Compal Electronics, Inc.

Title: Charger

Size | Document Number: LA-4041P | Rev: 0.2

Date: Friday, June 13, 2008 | Sheet 48 of 54

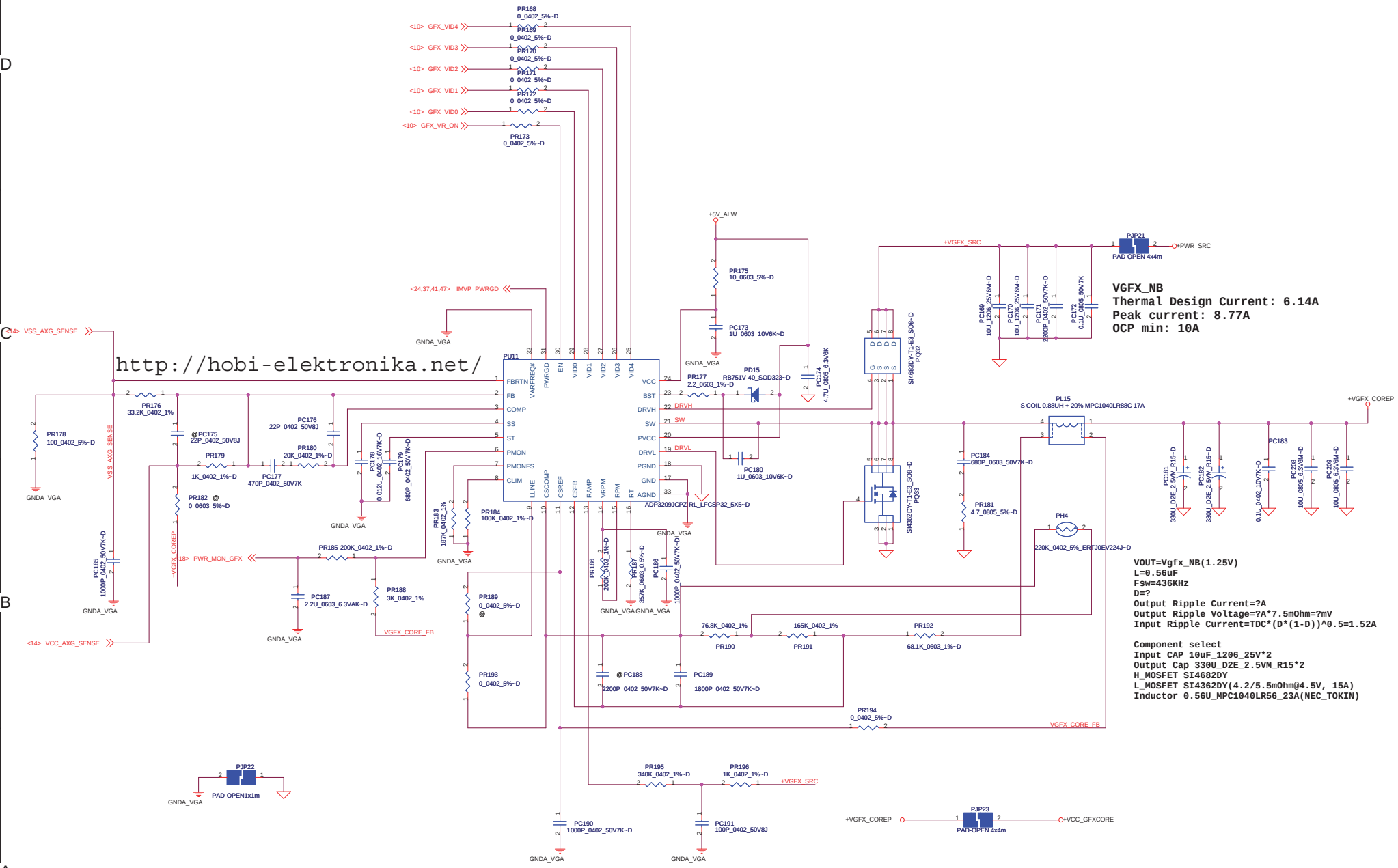

PROPRIETARY NOTE: THIS SHEET OF ENGINEERING DRAWING AND SPECIFICATIONS CONTAINS CONFIDENTIAL TRADE SECRET AND OTHER PROPRIETARY INFORMATION OF DELL INC. ("DELL") THIS DOCUMENT MAY NOT BE TRANSFERRED OR COPIED WITHOUT THE EXPRESS WRITTEN AUTHORIZATION OF DELL. IN ADDITION, NEITHER THIS SHEET NOR THE INFORMATION IT CONTAINS MAY BE USED BY OR DISCLOSED TO ANY THIRD PARTY WITHOUT DELL'S EXPRESS WRITTEN CONSENT.

DELL CONFIDENTIAL/PROPRIETARY

Compal Electronics, Inc.

Title: ADP3209_NB_core

Size | Document Number: LA-4041P | Rev: 0.5

Date: Friday, June 13, 2008 | Sheet 49 of 56

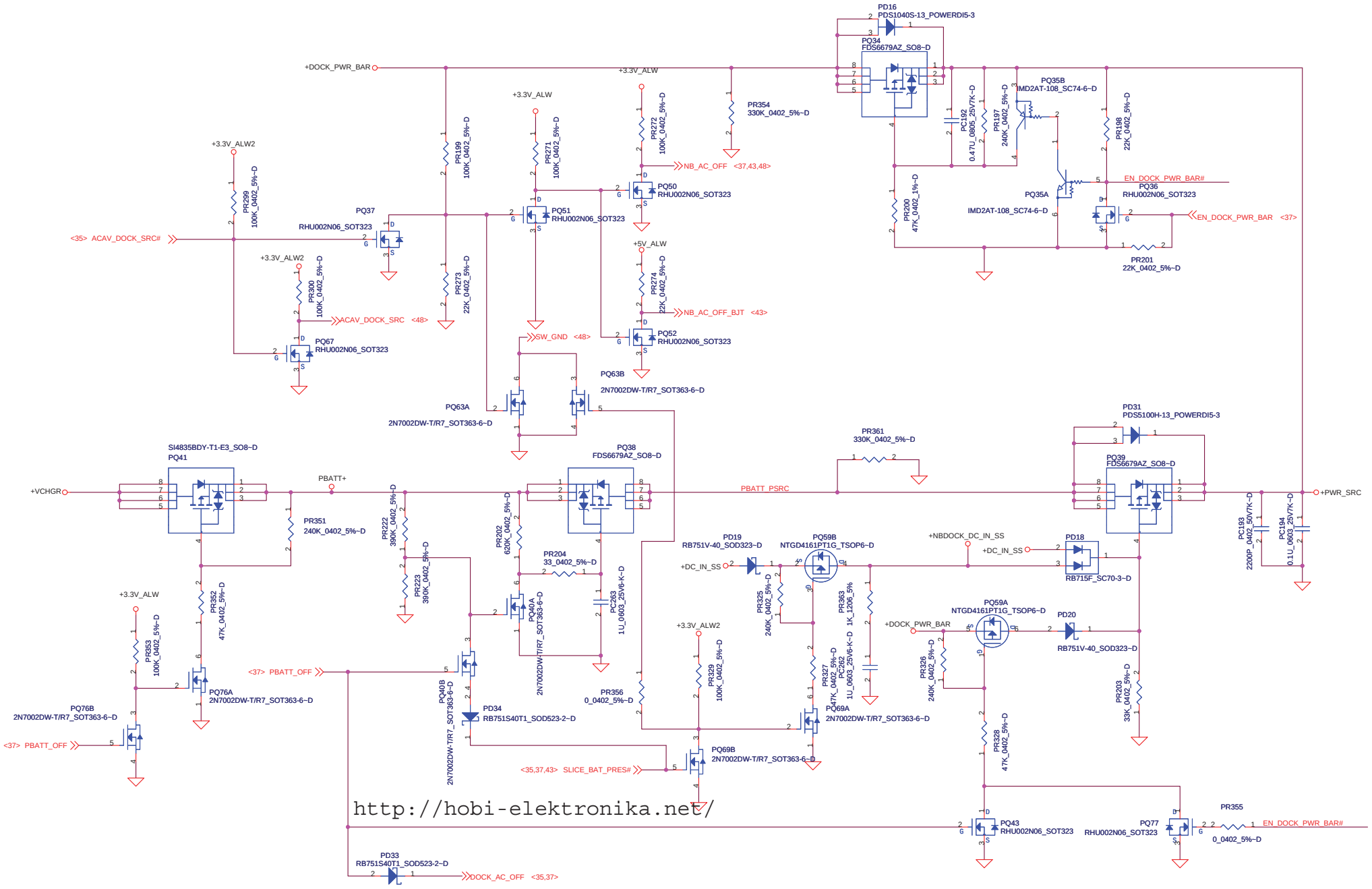

http://hobi-elektronika.net/

DELL CONFIDENTIAL/PROPRIETARY

PROPRIETARY NOTE: THIS SHEET OF ENGINEERING DRAWING AND SPECIFICATIONS CONTAINS CONFIDENTIAL TRADE SECRET AND OTHER PROPRIETARY INFORMATION OF DELL INC. ("DELL") THIS DOCUMENT MAY NOT BE TRANSFERRED OR COPIED WITHOUT THE EXPRESS WRITTEN AUTHORIZATION OF DELL. IN ADDITION, NEITHER THIS SHEET NOR THE INFORMATION IT CONTAINS WAY BE USED BY OR DISCLOSED TO ANY THIRD PARTY WITHOUT DELL'S EXPRESS WRITTEN CONSENT.

Compal Electronics, Inc.

Title	Selector	
Size	Document Number: LA-4041P	Rev 0.5
Date: Friday, June 13, 2008	Sheet 50 of 56	

Version Change List (P. I. R. List)

Item	Page#	Title	Date	Request Owner	Issue Description	Solution Description	Rev.
1	37	ECE5028	2007/10/08	Compal	SCH165092 : change BID pop option to X01.	R534 (depop) ; R529 (pop)	X01
2	24	ICH	2007/10/08	Compal	SCH165096 : modify the net "TPM_ID" connection.	change R273 from PD to GND to +3.3V_RUN. (PU = USH ; PD = china TPM)	X01
3	40	PWR CTRL	2007/10/08	Dell	SCH165105 : modify LAN_DISABLE# connection (MH:10/02 email)	Delete U61, add R934 and connect the net to U35(5028) pin 88. All Follow Roush circuit.	X01
4	36	USH	2007/10/08	Compal	SCH165106 : Change Y3 P/N & PCB footprint.	P/N from SJ10000550L to SJ100005X0L(KDS).	X01
5	36	USH	2007/10/11	Dell	SCH165108 : MA schematic Issue list , item 139.	change the connection ; NET" SMC_ADD15 " to GND. NET " SMC_ADD16 " to +3.3VRUN.	X01
6	33	USB	2007/10/11	Compal	SCH165110: (1) Per connector spec of the location JESA1. (2) Per 10/25 GPIO table, modify net name & connection. Also refer to Roush DF174483 issue.	(1)To swap the USB2 & USB3 connection to the JESA1 (2)modify connection, U29 pin4 for ESATA_USB_PWR_EN#,U53 pin4 for USB_POWERSHARE_PWR_EN#. (3)Per Roush DF174483, chnage the PU PWR from 3.3VALW to 3.3VALW2 for below, USB_SIDE_EN# ; ESATA_USB_PWR_EN# ; USB_POWERSHARE_EN#.	X01 X01
7	38	5035	2007/10/11	Dell	SCH165113 : Wrong PWR Rail (PU) for DOCK SMBUS.	Modify the PU PWR rail from 5VALW to 3VALW below, DOCK_SMB_DAT ; DOCK_SMB_CLK.	X01
8	19	LVDS Conn	2007/10/11	Dell	SCH165218 : to add webcam control PWR circuit.	Add Q125, Q126 to control Webcam PWR	X01
9	42	LED	2007/10/11	Compal	SCH165219 : Modify LED circuit concept.	Modify LED circuit concept	X01
10	35	eDOCK	2007/10/11	Dell	SCH165220 : ESD solution on DOCK Conn.	Add D65 & D66 , make them pop.	X01
11	12	Cantiga	2007/11/02	Dell	SCH165221 : Remove TV-out on LIO docking.	(1)disconnect TV out signals to U4,delete R674,R677,R678,R669,R762,R763. (2) make U4, pin15,pin19,pin20,pin31,pin22,pin23 all NC. (3) connect U2(MCH), pinF25,H25,K25,H24,B24,A24,M25 to GND. (4) U2(MCH),PinL28 connect to 1.5V filter.	X01
12	21	DP Circuit	2007/11/02	Compal	SCH165222 : Follow Roush to have PD on DPC_CA_DET	Add R377 (100K,PD)	X01
13	22	ICH	2007/11/02	Dell	SCH165223 : Foloow DELL GPIO table, GPIO date code : 1025	Modify U10(ICH), pinF6, net name from MDC_RST_DIS# to GNT3#/GPIO55	X01
14	33	USB 2.0	2007/11/02	Compal	SCH165223 : MDC couldn't be detected issue	R326 needs to PU to +5V_RUN and per GPIO table 10/25, MDC_RST_DIS# should be connected to U35(5028) pin84.	X01
15	23	ICH	2007/11/02	Dell	SCH165224 : To delete RTC detection circuit.	Have discussed with MH, HW needs to provide more spacing for ME structure support. to delete below Locations are: R92,R96,Q123,R913,R914	X01
16	31	CardBus	2007/11/02	Compal	SCH165229 : SD card PWR S/W is not DELL AVL.(U28)	Change U28 to DELL AVL, TI part.	X01
17	34	Mini Card	2007/11/03	Compal	SCH165216 : (1)Follow Roush schematic for R449. (2)follow Roush to pop C553,C572 for EMI noise	(1)make R449 (pop) and change to 100K ohm. (2)make C553 (pop) & C572(pop) for EMI noise concern.	X01
18	34	USH5880	2007/11/03	Compal	SCH165214 : Per BRCM's comments for L69 concern.	Change L69 to 450mA (rated current), They suggest to use 400mA at least.	X01
19	34	USH5880	2007/11/03	Dell	SCH165213 : BIOS no need SC_DET function.	Delete R489,R830, and U35 Pin84 change to MDC_RST_DIS#.	X01
20	34	ECE5028	2007/11/15	Compal	SCH165211 : Follow Roush to add 10K PD on SYS_LED_MASK#	Add R669 (10K , PD to GND)	X01
21	30	LAN Transfomer	2007/11/15	Compal	SCH165209 : Duplicate location for function on MB & IO board.	To delete R395 ~ R397 on MB to get more room for layout.	X01
22	37	ECE5028	2007/11/19	Compal	SCH165206 : ALWON Oscillating issue	To Add D4 & R20 to the 5028 input on the INSTANT_ON_SW# signal	X01
23	37	Intel LAN	2007/11/19	Compal	SCH165207 : To Add Intel LOM LDO for 2.65/2.5V	To Add Q50,Q146,C482,R1020,R1017,R1018,R1019,C483,C484	X01
24	10	GMCH	2007/11/19	Dell	SCH165208 : To Add level shift circuit for MCH HDA.	To Add Q50,Q146,C482,R1020,R1017,R1018,R1019,C483,C484 To pop R42,R44,R685~R687,R243~R246.	X01
25	36	USH5880	2007/11/19	Compal	SCH165205 : To delete R495,R499	Follow Roush schematic, R495 & R499 can be replaced with short.	X01
26	28	Codec AMP.	2007/11/20	Dell	SCH165253 : Dell Roush WLP Results	(1) On MB: C436 & C437; change from 1U 1206 25V to 2.2U 1206 25V (2) On IO : C2 & C3 from 1uF 0603 to 2.2uF 0805	X01
27	39	TP/KB	2007/11/20	Compal	SCH165256 : To remove ECE1088 related circuit	To remove U38(ECE1088), C677,C676,R747,R650,R826 to have more layout room	X01
28	38	MEC5035	2007/11/20	Compal	SCH165257 : To remove SPI ROM related circuit on MEC5035	(1) to delete U37,R591,R589,C672,R590,R592,R593,R558. (2) make U37, Pin67 ~ Pin69,Pin48 for NC.	X01
29	36	USH5880	2007/11/20	Dell	SCH165263 : FP_RESET# signal from USH5880 to BIO connector	(1)Add the connection of FP_RESET# between USH5880(U32), pinC3 to JBIO1 pin5. Also add R483(4.7K) PU on the net FP_RESET#. (2) chnage JBIO1 connector to TYCO_1734242, same as Roush part. (3) delete the connection of BIO_DET# to the ICH pinA8,and delete R823.	X01

PROPRIETARY NOTE: THIS SHEET OF ENGINEERING DRAWING AND SPECIFICATIONS CONTAINS CONFIDENTIAL TRADE SECRET AND OTHER PROPRIETARY INFORMATION OF DELL INC. ("DELL") THIS DOCUMENT MAY NOT BE TRANSFERRED OR COPIED WITHOUT THE EXPRESS WRITTEN AUTHORIZATION OF DELL. IN ADDITION, NEITHER THIS SHEET NOR THE INFORMATION IT CONTAINS WAY BE USED BY OR DISCLOSED TO ANY THIRD PARTY WITHOUT DELL'S EXPRESS WRITTEN CONSENT.

Version Change List (P. I. R. List)

Item	Page#	Title	Date	Request Owner	Issue Description	Solution Description	Rev.
30	18	EMC4002	2007/11/20	DELL	SCH165267 : To add the connection of PWR_MON_GFX	(1) add the net of PWR_MON_GFX, between U3 pin39 and PR185 pin2. (2) Add R938 (0 ohm, pop) and add R999 (270K , depop) (3) change R932 from 0 ohm to 4.7K	X01
31	38	MEC5035	2007/11/20	DELL	SCH165272 : change net name following PWR circuit naming.	(1) From ACAV_IN_DOCK# to ACAV_DOCK_SRC# (2) From ACAV_IN_MB/DOCK to ACAV_IN (3) also remove U59,C101 ; and add U69,C672.	X01
32	21	DP circuit	2007/11/20	Compal	SCH165273 : Per derating data from Roush team to change D10.	to change D10 from SDM10U45 to B0540WS for derating issue	X01
33	33	USB2.0	2007/11/20	Compal	LAY165112 : U54 need to be placed close to ICH.	change the common mode choke connection between SW and connector.	X01
34	30	LAN SW	2007/11/20	DELL	SCH165275 : To change MDI BUS L20 ~ L27 value	Per Roush WI: SCH164889, we have to change the value for L20 ~ L27 from 36nH to 22nH to improve the IEEE return loss margins.	X01
35	30	LAN SW	2007/11/21	Compal	SCH165306 : To remove MDI terminations and caps for LAN TX/RX	Follow Roush schematic to remove R384~R391;C488~C491	X01
36	18	EMC4002	2007/11/21	DELL	SCH165309 : EMC4002 POWER_SW# input - to add AND gate.	To add U68,R169,R170,C1050,R1014,R1015, follow Roush.	X01
37	35	Docking	2007/11/21	DELL	SCH165310 : docking pinout change to support battery slice.	To assign the Pin 41 of the docking connector for +NBDOCK_DC_IN_SS	X01
38	33	USB2.0	2007/11/21	Compal	SCH165312 : Follow Roush team to add a Cap on U54 Pin8.	Follow Roush team to add a Cap on +3.3V_SUS of U54 Pin8.	X01
39	37	ECE5028	2007/11/21	DELL	SCH165313 : To update 5028 GPIO	(1) chnage U35 Pin82, from DELL_ESATA_PWR_EN# to ESATA_USB_PWR_EN# (2) change U35 Pin104, from ESATA_USB_PWR_EN# to USB_POWERSHARE_PWR_EN# (3) delete R489,R830	X01
40	37 38	ECE5028 MEC5035	2007/11/21	DELL	SCH165315 : To update 5035 & 5028 GPIO	For 5035, (1) Pin30, from DEBUG_ENABLE# to SUSPWROK, no more net is called DEBUG_ENABLE# (2) Pin19, from SUSPWROK to RC_ID For 5028, (1) Pin 70, change to NC. (2) Pin 71, follow Roush to be LCD_TST only,remove R517.	X01
41	37	ECE5028	2007/11/21	DELL	SCH165316 : To change SNIFFER_DET# connection	Disconnect SNIFFER_DET# from ICH pin AE18 and connect it toEC5028 pin 33. Rename, SNIFFER_DET# to PWR_BTN_BD_DET#	X01
42	34	Mini Card	2007/11/21	DELL	SCH165320 : To pop R458 and R449.	Follow Roush to pop R458 and R449. R449 change to 100K.	X01
43	24	ICH	2007/11/22	DELL	SCH165338 : To modify the pop option for the net ICH_LAN_RST#	Follow Roush to depop R271, and pop R276	X01
44	7	CPU	2007/11/22	DELL	SCH165342 : To change BOM pop option and value of ITP circuit	(1) R785 change to depop (2) R65,R66,R62,R64,R67, from 51 ohm to 56 ohm. (3) R60 from 10K to 150 ohm	X01
45	7	CPU	2007/11/26	DELL	SCH165380 : voltage step up issue on H_RESET#	To depop the R923 to solve the voltage step up issue on H_RESET#	X01
46	24	ICH	2007/11/27	DELL	SCH165428 : To remove the second SPI ROM on ICH	to delete R295,R304,R305,C329,U13,R306,R308,R309,R307	X01
47	36	USH5880	2007/11/27	Compal	SCH165429 : To delete R846,R847	Per FAE's feedback, we can delete them for more layout room. Those resisters are the srap pin for chip version control. B0: pop R844,R845 ; so remove R846,R847	X01
48	36	Codec	2007/11/27	DELL	SCH165430 : To delete R329	Because we'll fix by PD R331 only. This is for I2C or SPI selection	X01
49	7	CPU	2007/11/28	Compal	SCH165508 : To add 0 ohm resisters for ESD concern.	ESD team require to have some 0 ohm series resisters on the ITP I/F. to add R780 ~ R784,R789.	X01
50	10	GMCH	2007/11/29	Compal	SCH165550 : To change R181 value for DP functional workable	Per Roush PT build result, need to change the R181 from 100K to 4.02K	X01
51	13	GMCH	2007/12/03	Compal	SCH165564 : this is Roush team EE WI	To remove D1 & R122	X01
52	31,32	CardBus	2007/12/06	Compal	SCH165942 : Ricoh review result	(1) CBS_CCD1#/CBS_CCD2# add C502/C503 270PF pull down. (2) U52.+1.5V_CARD add C101,+3.3V_CARDAUX add C105 10uF 0805. (3) R657,R684,R790 deopo,because chip internal have pull up. (4) PinA14, FIL0 add 0402 0.01uF C603	X01
53	10	GMCH	2007/12/07	Compal	SCH165943 : To modify the HDA circuiut	change U67 to bi-direction part, and delete U66,C1048,C1049	X01
54	21	Display Port	2007/12/08	Compal	SCH165944 : To Follow Intel suggestion to update DP circuit	Add Q162,Q163 and modify the DP concept to meet Intel suggestion.	X01
55	37,38	5035,5028	2007/12/08	Compal	SCH165945 : To follow Roush team Instant SW circuit	Add R1036,R445,R933,depop R20,depop C100,depop U57, Depop R560	X01

PROPRIETARY NOTE: THIS SHEET OF ENGINEERING DRAWING AND SPECIFICATIONS CONTAINS CONFIDENTIAL TRADE SECRET AND OTHER PROPRIETARY INFORMATION OF DELL INC. ("DELL") THIS DOCUMENT MAY NOT BE TRANSFERRED OR COPIED WITHOUT THE EXPRESS WRITTEN AUTHORIZATION OF DELL. IN ADDITION, NEITHER THIS SHEET NOR THE INFORMATION IT CONTAINS WAY BE USED BY OR DISCLOSED TO ANY THIRD PARTY WITHOUT DELL'S EXPRESS WRITTEN CONSENT.

Item	Page#	Title	Date	Request Owner	Issue Description	Solution Description	Rev.
56	24	ICH	2007/12/08	DELL	SCH165946 : To Follow Schematic, it's feedback from Intel	To add R210 10K(@) PU to +3.3V_ALW_ICH on the net"LAN_DISABLE#"(depop)	X01
57	10	GMCH	2007/12/10	Compal	SCH165947 : Intel asks to change R180,R182,R183 value.	R180,R182,R183 from 100K to 4.02K.	X01
58	37	ECE5028	2007/12/17	Compal	SCH166250 : To change the BID from X01 to X02	pop R530, depop R535 ; pop R534, depop R529	X02
59	35	Docking	2007/12/17	DELL	SCH166251 : to add PU option for DOCK_DET#	Add R1038, and depop R124	X02
60	12	Cantiga	2007/12/17	DELL	SCH166253 : to change the R672 value	follow Roush team to change the value from 1.02K to 976 ohm.	X02
61	12	Cantiga	2007/12/17	DELL	SCH166255 : To change R688 value	R688 from 2.37K to 2.4K	X02
62	42	LED	2007/12/17	Compal	SCH166258 : to add D67 for backdrive issue	to add D67 to solve backdrive issue in S3 , +3.3VWLAN to +5VRUN via body diode.	X02
63	18	EMC4002	2007/12/17	DELL	SCH166260 : to follow Rosuh to disable the 2.5V from EMC4002	to add R211, depop R149, depop C238,C239	X02
64	21	DP	2007/12/17	DELL	SCH166262 : to follow Roush schematic to pop R875	follow Roush UMA DP circuit to pop R875	X02
65	27	Codec	2007/12/17	DELL	SCH166266 : to follow Roush team to change C408 ~ C411 value	C408 ~ C411 from 1uF to 2.2uF 0805 10V	X02
66	18,21 37,38,42	EMC4002,DP 5028,5035,LED	2007/12/17	DELL	SCH166268 : About 74AHCT1G08GW AND Gate issue	Change U68, U60, U69, U57, and U65 from 74AHCT1G08GW to 74AHC1G08GW	X02
67	38	MEC5035	2007/12/17	DELL	SCH166269 : update the connection of ACAV_DOCK_SRC#	The signal ACAV_DOCK_SRC# can be removed from the 5035	X02
68	42	LED	2007/12/17	DELL	SCH166271 : to follow Roush to add Q150 and R1039(depop)	to follow Roush to add Q150 and R1039(depop)	X02
69	33,38	USB,MEC5035	2007/12/17	DELL	SCH166273 : to modify for the connection "CELL_CHARGER_DET#"	add D68,D69,R1040,Delete R926,change C1013 from 0.1u to 1u. follow Roush team.	X02
70	6,8,24	CLK,CPU,ICH	2007/12/17	DELL	SCH166276 : Intel NOA test point compliance	Add R1041~R1045.	X02
71	33	USB2.0	2007/12/17	DELL	SCH166277 : to add esata repeter U72 related circuit	to add U72,C490,C489,R306,R307,R305,C1052,C488 and U72 change to PI2EQX3201BZFE	X02
72	35	Dock	2007/12/21	Compal	SCH166435 : Hot Docking then Docking side Apdater Protect	add D70 and R1057 on docking connector, and add C1055, R1059. MEC5035 pin41 change to "DOCK_POR_RST#" to dock pin140	X02
73	35	Dock	2007/12/28	Compal	SCH166508 : DP function finalize to change DP/DVI circuit	add R1060~R1063 for DDC, R1064/R1065 for CD_DET, R1066~R1069 for pull up an dlow	X02
74	36	USH	2007/12/28	Dell	SCH166328: Add a series resistor on PLTRST3# for the USH RESET_N	Add R1070 for PLTRT3# to USH RST_N	X02
75	37	IO 5028	2007/12/28	Compal	SCH166510 : DOCK_AC_OFF signals problem	Cause the Battery Slice make the DOCK_AC_OFF always Low, add D72/R1071, PR356 and PD33. But depop it	X02
76	42	LED	2008/1/2	Compal	SCH166540: DF186056 : ROUSH issues, Maybach have same design and similar ME design. Follow Roush suggest for LED Resistors value	Change the LED resistors value: (1) R997 --> 68ohm (power on LED on IO board) (2) others Blue color LED change to 1K : R125, R556, R596, R655, R659, R663, R665, R661, R668, R689, R1000	X02
77	37	IO 5028	2008/02/13	Compal	SCH168204 : change BID to X03	pop R529, depop R534	X03
78	37	IO 5028	2008/02/13	Dell	SCH168206 : follow Roush X05 schematic	pop D72, depop R1072, pop R1071 (33K ohm)	X03
79	36	USH5880	2008/02/13	Dell	SCH168207 : USB EA issue	change R468/R469 from 22ohm to 0ohm	X03
80	33	USB2.0	2008/02/13	Dell	SCH168208 : Follow Roush to add bypass resisters on U54.	add R1082,R1083 (make them depop)	X03
81	18	EMC4002	2008/02/13	Dell	SCH168209 : change R152 from 0ohm to0.82ohm for LDO input	change R152 from 0ohm to 0.82ohm	X03
82	6	CLOCK	2008/02/13	Dell	SCH168210 : Follow Roush to change L1 (derating problem)	change L1 to DC PWR Part BK2125HS601	X03
83	36	USH5880	2008/02/13	Dell	Schematic : Follow Roush to pop R849 to support USH Low PWR	pop R849	X03
84	35	edock	2008/02/13	Dell	SCH168211 : follow Roush to depop R1057	depop R1057	X03
85	33	USB2.0	2008/02/13	Dell	SCH168213 : for esata EA to pop R1046	pop R1046	X03
86	10	MCH	2008/02/13	Dell	SCH168215 : follow Roush to add R1088(depop) for Intel debug	depop R1088	X03
87	24,36	ICH,USH5880	2008/02/13	Dell	SCH168216 : To have disable / enable TPM pop option	3@ = disable TPM , 4@ = enable TPM R273(4@),D71(4@),R1058(4@) R304(3@),R489(3@)	X03
88	42	LED	2008/02/13	Dell	SCH168217 : to change R997 value, LED current over spec	change R997 to 82ohm	X03
89	33	USB2.0	2008/02/13	Dell	SCH168218 : Follow Roush to update ESATA circuit	Add R1075,R1074,R1079,R1080,R1077,R1078	X03
90	13	MCH	2008/02/13	Dell	SCH168219 : debug +3.3V_RUN backdrive issue in S3	Add R1076	X03
91	27	Codec	2008/02/13	Dell	SCH168220 : Per vendor feedback, change L18 to BLM18EG601SN1D	L18 change to BLM18EG601SN1D	X03
92	27	Codec	2008/02/13	Dell	SCH168221 : Per vendor feedback, update codec circuit	Add L35,delete C392,R328(Depop),R327 & R828 change to 499K ohm	X03
93	38	MEC5035	2008/02/13	Dell	SCH168223 : Dock SMBUS timing failed	Change R565, R567 to 2.2K ohm	X03
94	10	MCH	2008/02/15	Dell	SCH168224 : Follow Roush to change R180~R183 value	change to 2.2K	X03
95	7	CPU	2008/02/15	Dell	SCH168225 : Follow Roush to update ITP circuit resister value	R65 from 56ohm to 150ohm;R66 from 56ohm to 649ohm;R64 from 56ohm to 39ohm R67 from 56ohm to 27ohm;R57 from 1Kohm to 124ohm	X03
96	27	Codec	2008/02/20	Dell	SCH168336 : Follow Roush to change C406 to 10uF to change C436/C437 from 2.2uF to 10uF for Audio performance	C406 change to 10uF, C436/C437 change to 10uF	X03
97	21	DP	2008/02/20	Dell	SCH168338 : to change R377 value to follow DP spec.	R377 change to 1M ohm.	X03

PROPRIETARY NOTE: THIS SHEET OF ENGINEERING DRAWING AND SPECIFICATIONS CONTAINS CONFIDENTIAL TRADE SECRET AND OTHER PROPRIETARY INFORMATION OF DELL INC. ("DELL") THIS DOCUMENT MAY NOT BE TRANSFERRED OR COPIED WITHOUT THE EXPRESS WRITTEN AUTHORIZATION OF DELL. IN ADDITION, NEITHER THIS SHEET NOR THE INFORMATION IT CONTAINS WAY BE USED BY OR DISCLOSED TO ANY THIRD PARTY WITHOUT DELL'S EXPRESS WRITTEN CONSENT.

Item	Page#	Title	Date	Request Owner	Issue Description	Solution Description	Rev.
98	21	DP	2008/02/20	DELL	SCH168340:To modify DP circuit as Roush schematic	pop R875,R278 ; depop R1066,R674,R650,R1069	X03
99	9	CPU	2008/02/20	DELL	SCH168341:To update CPU Bypass caps value & pop option	(1) change C56 ~ C61 from 220uF to 270uF (2) depop C59.	X03
100	27	Codec	2008/02/20	Compal	SCH168349 : modify codec circuit to have analog GND	To add analog GND to solve noise problems.	X03
101	27	Codec	2008/02/21	Compal	SCH168528 :To modify Audio circuit after discussing with ADI	To improve Audio noise problem. 1. change C401 to 0.1uF 2. change C408/C409 to 0.22uF 3. change C410/C411 to 0.068uF 4. add C77/C78/C79/C81/R308/R309 5. delete C397	X03
102	36	USH5880	2008/02/21	Compal	SCH168529 : to modify RFID circuit for EMI issue.	Add L71,L72,C1056,C1057	X03
103	18	EMC4002	2008/02/25	Compal	SCH168530 : chnge R153 value to meet the formula of Ra.	R153 change to 3.16K	X03
104	33	USB2.0	2008/02/29	Compal	SCH168775 : To pop U51 per ESD testing result	pop U51	X03
105	23,29.36	ICH,USH,LAN	2008/02/29	Compal	SCH168776 : X'tal EA result to change some Caps value	C296/C297 from 15pF to 10pF ; C475/C476 from 27pF to 12pF;C609/C608 from 22pF to 12pF	X03
106	27	Codec	2008/3/3	Compal/IDT	SCH168837 : Follow Roush to add R1091/R1092 for Audio noise	add R1091/R1092 (100 ohm)	X03
107	39	TP/INT KB/LID	2008/3/3	DELL	SCH168840 : M09 S3 backdrive issue	Touch pad vendor use 5VALW for SMBUS,to add R1093,Ro1094, and depop R594/R595	X03
108	23	ICH	2008/3/3	Compal	SCH168842 : 24MHz noise issue (EMI feedback)	pop C300,C302,C309	X03
109	31	CardBus	2008/3/4	Compal	SCH168876 : Modify SD card circuit per EMI's feedback	R416 change to 33ohm and add C397(33pF)	X03
110	40	PWR CTRL	2008/3/5	Compal	SI4336DY will phse out, impact location Q61,Q67	Q61,Q67 from SI4336DY to NTMS4107NR2G	X03
111	20	CRT	2008/3/5	Compal	SCH168968 : modify RGB circuit to pass EMI/HW timing	L61/L62/L63 from BLM18BB750SN1D to ; depop C267/C268 BLM18BB470SN1D; depop C390/C518/C996 L8/L9/L10 change to R830/R831/R832 all for 0 ohm	X03
112	36	USH5880	2008/3/6	DELL	SCH169090 : Per Roush EE WI SCH167486	R849 change to 1.5K , R915 change to 300 ohm	X03
113	31	CardBus	2008/3/6	Compal	SCH169116 : X'tal EA result (location: X3)	change C515 to 22pF, C514 to 27pF	X03
114	21	DP circuit	2008/3/11	DELL	SCH169224 : modify DP circuit	(1)To implement the DP S/W as SN74CBTD3306 for MB & Docking side (2)F1, change to 1206L150PR, make it pop, add C485 (10 uF), R184(depop)	X03
115	12	MCH	2008/3/11	DELL	SCH169225 : follow Roush to add 75 ohm on TV signals	Add R1114 ~ R1116	X03
116	33	USB2.0	2008/3/11	DELL	SCH169226 : to bypass USB S/W	depop U54,C1045 ; pop R1082,R1083	X03
117	27	Codec	2008/3/11	ADI	SCH169231 : to modify Audio circuit	(1) C77,C78,C79,C81 change to 1000pF (2) L35 change to LBR2012T101K (3) add C481(0.1uF) (4) C410/C411 change to 0.22uF (5) C408,C409 change to 1uF (6) R1091,R1092,R340,R342 change to 200 ohm (7) R308,R309 change to 10 M ohm and use AGND	X03
118	6,37,38 ,36	Clock,5028 5035, dock	2008/3/12	Compal	SCH169269 : to improve system noise	R19 to 39ohm,R285(pop),C318(pop),R26 to 39ohm,R527(pop),C656(pop) R32 to 39ohm,R588(pop),C673(pop),R29 to 39ohm, R744(pop),C589(pop)	X03
119	24	ICH	2008/3/12	DELL	SCH169282 : add 2nd SPI ROM	add R385,R375,U13,C392,R383,R329.R384,R386,R387	X03
120	24	ICH	2008/3/13	DELL	to delete the change for item 119	to delete R385,R375,U13,C392,R383,R329.R384,R386,R387	X03
121	24	ICH	2008/3/12	DELL	SCH169282 : add 2nd SPI ROM	add R385,R375,U13,C392,R383,R329.R384,R386,R387	X03
122	24	ICH	2008/3/17	DELL	SCH169460 : add connection for SPI ROM selection	add R1049,R1060, add SPI selection connection of SPI_WP#_SEL	X03
123	6	Clock	2008/3/18	DELL	SCH169486 : 33MHz clock shared issue	CLK_PCI_PCM connection change to U1 pin 33. Pin 32 is for dock 33MHz ONLY.	X03
124	21,35	DP,eDOCK	2008/4/28	Compal	SCH170959 : C985/C984 from 0.1uF to 0.033uF for ESD concern	C985/C984 from 0.1uF to 0.033uF.	X04
125	24	ICH	2008/4/28	DELL	SCH170960 : to depop 2nd SPI ROM	to depop R385,R1060,R375,U13,C392,R383,R329,R384,R386	X04
126	27	Codec	2008/4/28	Compal	SCH170961 : EMI concern for DMIC_CLK	change R338 to L75, and pop C486	X04
127	27	Codec	2008/4/28	DELL	SCH170962 : bypass double inverter of DAI_DI	depop U18,U19,C418,C419 and add R762	X04
128	35	eDOCK	2008/4/28	Compal	SCH170963 : Follow Roush to add R1095,R1096	add R1095,R1096. (0 ohm)	X04
129	37	ECE5028	2008/4/28	Compal	SCH170964 : change BID	depop R539 add R534, depop R530 add R535, add R531 depop R536	X04
130	40	PWR CTRL	2008/4/28	Compal	SCH170965 : add discharge circuit of 3.3VRUN	add R625(39 ohm) and Q79	X04
131	42	LED	2008/5/7	Compal	SCH171234 : SNIFFER LED only support BLUE color	depop Q100,R667	X04
132	18	EMC4002	2008/5/7	Compal	SCH171233 : FAN speed couldn't be dectected issue	add D38	X04
133	23	ICH	2008/5/8	Compal	SCH171331 : WLAN detection issue	Follow Roush to add R84,R96 10K PD. (R84 & R96 all depop)	X04
134	40	PWR CTRL	2008/5/26	Compal	SCH172014 : Follow Roush to change C688 value.	C688 from 4700pF to 3300pF.	X04A
135	10	MCH	2008/5/26	Compal	SCH171331 : PCIe detection for WLAN issue	Add Q153~Q155, R1118~R1123 , C1049	X04A
136	24,38	ICH,MEC5035	2008/6/2	DELL	SCH172196 : re-route ODD_DET#	add a connection to MEC5035 pin 34 also.	A00
137	37	ECE5028	2008/6/2	Compal	SCH172197 : BID changed from X04 to A00	POP R529, DEPOP R534	A00
138	29	82567LM	2008/6/6	DELL	SCH172399 : LOM IEEE test result from Intel	C475 & C476 from 12PF to 27PF to pass LOM IEEE test	A00
139	42	LED	2008/6/6	Compal	SCH172401 : Breath LED current issue	R997 from 82 ohm to 100 ohm for current limited	A00
140	24	ICH	2008/6/6	Compal	SCH172404 : SAWTOOTH waveform on SERIRQ issue	Add R122(33 ohm)	A00
141	36	USH5880	2008/6/13	BRCM	BRCM feedback for PI circuit	C1056/C1057 from 5% to 1% ; C641/C647 from 5% to 1%	A00

Version Change List (P. I. R. List)

Item	Page#	Title	Date	Request Owner	Issue Description	Solution Description	Rev.
1	43	+DC_IN	11/17	leverage Roush	Battery slice need detect NB battery is insert or not.	Add PQ61 NTR4502PT1G, and PD32 RB751_SOD323 Connect to DOCK_SMB_ALERT# and SLICE_BAT_PRES#	X01
2	43	+DC_IN	11/17	leverage Roush	DCIN_CBL_DET# damage ECE5028	Add ESD diedo PD17 DA204U_SOT323 at DCIN_CBL_DET# Series PR221 1K_0402_5% between PJPDC1, PIN1 and DCIN_CBL_DET# Parallel PC254 0.47uF_0402_6.3V on DCIN_CBL_DET#	X01
3	43	+DC_IN	11/17	leverage Roush	Roush component and rework changes for Dcoking test	PC4 change form 0.47uF_0805_25V to 0.1uF_0805_25V PR14 change form 240K_0402_5% to 1M_0402_5% PR17 change form 47K_0402_1% to 220K_0402_5% PR18 change form 47K_0402_1% to 22K_0402_5% PR342 change form 0_0402_1% to 100K_0402_5%	X01
4	48	Charger	11/17	leverage Roush	NB DC blocking MOSFET won't turn off when Dock AC insert.	Add PQ44 RHU002N06 control NB DC blocking MOSFET. Control singal is NB_AC_OFF Series PR284 200K_0402_1% between PQ44 PIN1 and ACAV_IN Add PD30 B540C parallel PQ34	X01
5	48	Charger	11/17	leverage Roush	Charger of ISL88731 will turn off When ACIN is no power	Add LM393 to replace ISL88731 ACOK function(PU11B)	X01
6	48 50	Charger Selector	11/17	leverage Roush	+PWR_SRC exist on Docking connector through the DOCK_DCIN_IS+ and -	Add PQ62 NTGD4161PT1G series DOCK_DCIN_IS+ and - Add PQ63 RHU002N06 to control PQ62 on/off	X01
7	48 50	Charger Selector	11/17	leverage Roush	A global signal name change for all notebooks	From "ACAV_IN_DOCK" to "ACAV_DOCK_SRC" From "ACAV_IN_DOCK#" to "ACAV_DOCK_SRC#"	X01
8	48	Charger	11/17	leverage Roush	SCH165050: Validate EMC4002 VIN1/VCP1/VCP2 for UMA & Discrete for PT1 SMT	Depop UL circuit.	X01
9	50	Selector	11/17	leverage Roush	PBATT DC blocking MOSFET won't turn off when Docking AC insert. It will cause Battery or adapter protect.	Add PD18 RB715F_SOT323, PD20 and PD19 RB751V_SOD323, PR329 100K_0402_5% PR328 and PR327 47K_0402_5%, PR326 and PR325 240K_0402_5% PQ69 2N7002DW-7-F_SOT363-6, PQ59 NTG6161PT1G_TSOP6 Extra net name add +NBDOCK_DC_IN_SS from Docking connector	X01
10	43	+DCIN	11/20	EE / SCH165224	follow HW change	To delete the RTC detection circuit	X01
11	48 50	Selector charger	11/30	Dell	for slice function implement	change charger output to FB pin15 net name from PBATT+ to +VCHGR Add PQ41 PQ70 PR351 PR352 PR353 between +VCHGR and PBATT+	X01
12	43	+DCIN	12/17	Dell	change DCIN connector for ESD issue of "DCIN_CBL_DET#"	from Molex_87437_0663 to MOLEX_87437-0763	X02
13	50	Selector	12/28	leverage Roush	follow Roush	change PQ63 from RHU002N06 to 2N7002DW ADD PD33 RB751V ADD PR354 ADD PQ77 RHU002N06 and PR355 0 ohm	X02
14	48	Charger	12/28	leverage Roush	follow Roush	Change PC131 from TBD to 0.047uF	X02

Version Change List (P. I. R. List)

Item	Page#	Title	Date	Request Owner	Issue Description	Solution Description	Rev.
15	47	+Vcore	02/18	Dell / Maxim	Reduce Ring-backwithin 20mV when change bulk caps from 4*220uF to 3*270uF	PR129 change from 909 ohm to 825 ohm	
16	50	Selector	02/18	Merle DELL	Fix BITS CR196131 and CR196130	Add PR363 1K_1206 and PC262 1U_0603_25V from +NBDOCK_DC_IN_SS to ground Add PD35 RB751S40T1_SOD523-2 from NB_AC_OFF# to ACAV_IN_NB	
17	47	+Vcore	02/18	Maxim	Fix Jitter issue	change PR123 to 10_ohm change PC122 to PR320 10_ohm	
18	48/50	charger / selector	02/26	Compal	location change for Charger 2nd source X76 BOM control	change PR141 to PR217 change PR217 to PR141 change PR228 to PR218 change PR218 to PR351 change PR230 to PR219 change PR219 to PR352 change PR229 to PR220 change PR220 to PR353 change PR284 to PR307 change PQ62 to PQ70 change PQ70 to PQ76	
19	48	Charger	03/06	Compal	Delete non-use circuit	delete +DC_IN_SS to PR217 and PR217.	
20	50	Selector	03/06	Compal	For slice battery hot docking issue	Change PQ40 from IMD2AT to 2N7002DW change PR202 from240K_ohm ot 620k_ohm change PR204 from 47K_ohm to 33_ohm add PR222 390K_ohm and PR223 390K_ohm add PD34 RB751S40T1	
21	47	+Vcore	03/11	Maxim	For driver IC power down issue	Add PR321 PR322 PR323 from IC pin 2 to GND	
22	44-50	All	03/19	Compal	EMI solution	Change PR32 PR33 PR57 PR58 PR64 PR74 PR91 PR144 PR177 to 2.2_ohm Add PC198 PR211 PC199 PR212 PC200 PR213 PC201 PR214 PC202 PR215 PC87 PR72 PC91 PR75 PC100 PR90 PC102 PR95 PC114 PR108 PC118 PR119 PC204 PR216 PC184 PR181 PC128 PC130	
23	45	1.5V/1.05v	4/23	Compal	change non-lead free part to lead free part	PR47 change from SD03415830L to SD03415838L	
24	47	Vcore	4/23	Maxim	Driver IC power down issue need change resistor value	change PR321 PR322 PR323 to 33K	
25	49	ADP3209	4/23	Intel Compal	Follow Roush VGFX DC load line slope change to -7.5mOhm	Change PR192 from 75K_0603 to 68.1K_0603	
26	43	DC-IN	6/3	Compal	Glitch issue on SLICE_BAT_PRES#	Add PC257:SE074152K8L(S CER CAP 1500P 50V +-10% X7R 0402) between pin2 of PQ61 and GND.	
27	50	Selector	6/4	Compal	Reserve a pull high resistor between +3.3V_ALW2 and SLICE_BAT_PRES#	Add un-pop PR330:SD02847018L(S RES 1/16W 4.7K +-5% 0402) between +3.3V_ALW2 and PQ40B.5.	

http://hobi-elektronika.net/