Compal confidential

ISKAA LA-3481P Schematics Document

Mobile Merom uFCPGA with Intel Crestline_PM+ICH8-M core logic

2007-06-23

REV:2.0A

Security Classification	Compal Secret Data		
Issued Date	2006/08/05	Deciphered Date	2007/08/05

THIS SHEET OF ENGINEERING DRAWING IS THE PROPRIETARY PROPERTY OF COMPAL ELECTRONICS, INC. AND CONTAINS CONFIDENTIAL AND TRADE SECRET INFORMATION. THIS SHEET MAY NOT BE TRANSFERED FROM THE CUSTODY OF THE COMPETENT DIVISION OF R&D DEPARTMENT EXCEPT AS AUTHORIZED BY COMPAL ELECTRONICS, INC. NEITHER THIS SHEET NOR THE INFORMATION IT CONTAINS MAY BE USED BY OR DISCLOSED TO ANY THIRD PARTY WITHOUT PRIOR WRITTEN CONSENT OF COMPAL ELECTRONICS, INC.

Compal Electronics, Inc.		
Title: Cover Sheet		
Size	Document Number: LA-3481P	Rev: 2.0
Date: Saturday, June 23, 2007	Sheet 1 of 47	

Compal confidential

Model : ISKAA

File Name : LA-3481P

Santa Rosa Platform

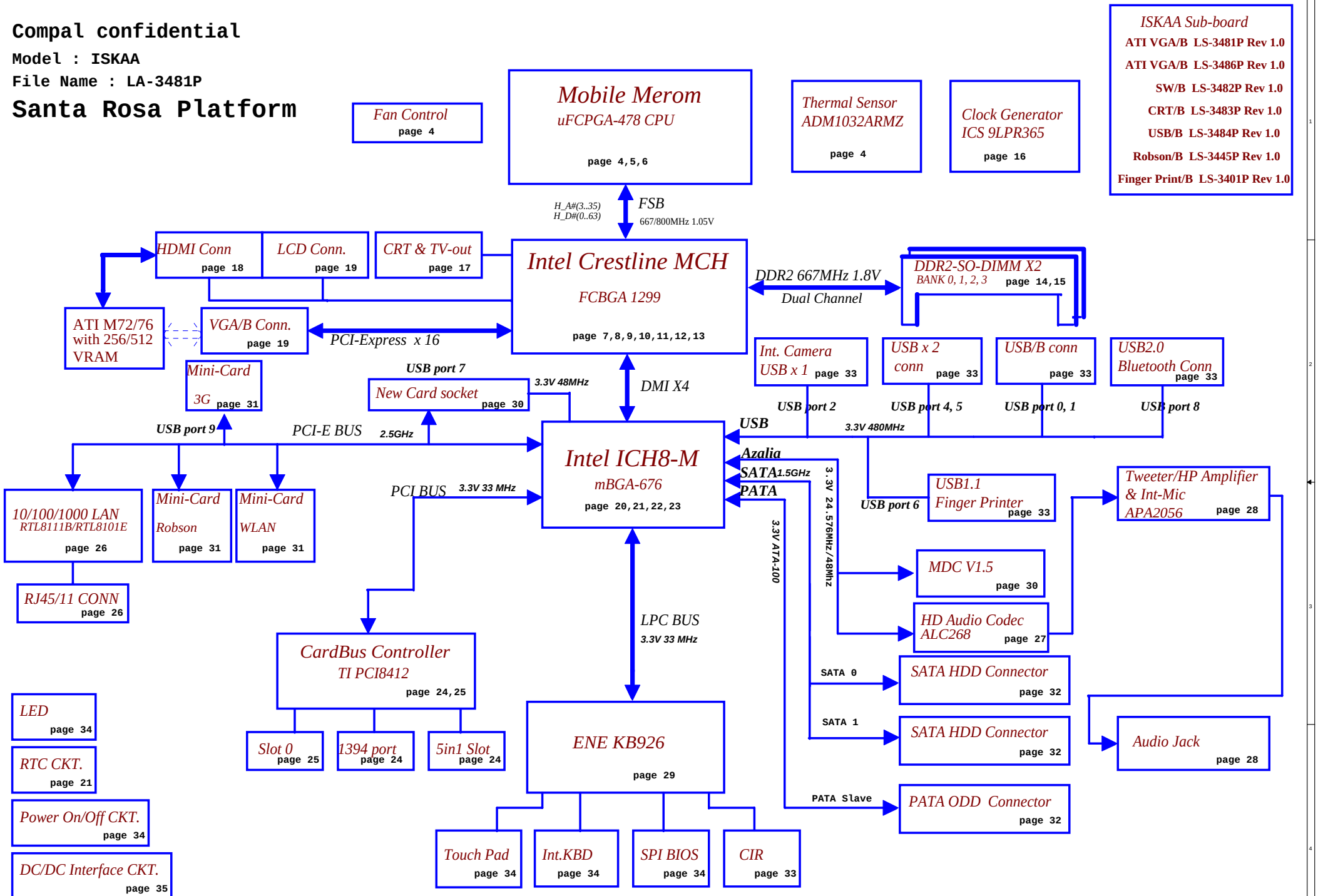

Security Classification	Compal Secret Data		
Issued Date	2006/08/05	Deciphered Date	2007/08/05

THIS SHEET OF ENGINEERING DRAWING IS THE PROPRIETARY PROPERTY OF COMPAL ELECTRONICS, INC. AND CONTAINS CONFIDENTIAL AND TRADE SECRET INFORMATION. THIS SHEET MAY NOT BE TRANSFERED FROM THE CUSTODY OF THE COMPETENT DIVISION OF R&D DEPARTMENT EXCEPT AS AUTHORIZED BY COMPAL ELECTRONICS, INC. NEITHER THIS SHEET NOR THE INFORMATION IT CONTAINS MAY BE USED BY OR DISCLOSED TO ANY THIRD PARTY WITHOUT PRIOR WRITTEN CONSENT OF COMPAL ELECTRONICS, INC.

Compal Electronics, Inc.

Title: **Block Diagram**

Size | Document Number: LA-3481P | Rev 2.0

Date: Tuesday, May 22, 2007 | Sheet 2 of 47

Voltage Rails

Power Plane	Description	S0-S1	S3	S5
VIN	Adapter power supply (18.5V)	N/A	N/A	N/A
B+	AC or battery power rail for power circuit	N/A	N/A	N/A
+VCC_CORE	Core voltage for CPU	ON	OFF	OFF
+0.9VS	0.9V switched power rail for DDRII Vtt	ON	OFF	OFF
+1.05VS	1.05V power rail for Processor I/O and MCH/ICH core power	ON	OFF	OFF
+1.25VS	1.25V power rail for MCH/ICH core power	ON	OFF	OFF
+1.5VS	1.5V switched power rail for PCI-E interface	ON	OFF	OFF
+1.8V	1.8V power rail for DDRII	ON	ON	OFF
+1.8VS	1.8V switched power rail	ON	OFF	OFF
+2.5VS	2.5V switched power rail for MCH video PLL	ON	OFF	OFF
+3VALW	3.3V always on power rail	ON	ON	ON*
+3VS	3.3V switched power rail	ON	OFF	OFF
+5VALW	5V always on power rail	ON	ON	ON*
+5VS	5V switched power rail	ON	OFF	OFF
+RTC_VCC	RTC power	ON	ON	ON

Note : ON* means that this power plane is ON only with AC power available, otherwise it is OFF.

External PCI Devices

DEVICE	PCI Device ID	IDSEL #	REQ/GNT #	PIRQ
1394	D0	AD20	2	A,B,C,D
CARD BUS	D4	AD20	2	A,B,C,D
5IN1	D4	AD20	2	A,B,C,D

KB926 I2C / SMBUS ADDRESSING

DEVICE	HEX	ADDRESS
SM1 24C16	A0H	1 0 1 0 0 0 0 X b
SM1 SMART BATTERY	16H	0 0 0 1 0 1 1 X b
SM2 ADM0132 CPU THERMAL MONITOR	98H	1 0 0 1 1 0 0 X b

ICH8-M SM Bus address

DEVICE	HEX	ADDRESS
DDR SO-DIMM 0	A0	1 0 1 0 0 0 0 0
DDR SO-DIMM 1	A4	1 0 1 0 0 1 0 0
CLOCK GENERATOR (EXT.)	D2	1 1 0 1 0 0 1 0

Board ID / SKU ID Table for AD channel

Vcc	3.3V +/- 5%
Ra/Rc/Re	100K +/- 1%

Board ID	Rb / Rd / Rf	V_{AD_BID} min	V_{AD_BID} typ	V_{AD_BID} max
0	0	0 V	0 V	0.100 V
1	8.2K +/- 1%	0.216 V	0.250 V	0.289 V
2	18K +/- 1%	0.436 V	0.503 V	0.538 V
3	33K +/- 1%	0.712 V	0.819 V	0.875 V
4	56K +/- 1%	1.036 V	1.185 V	1.264 V
5	100K +/- 1%	1.453 V	1.650 V	1.759 V
6	200K +/- 1%	1.935 V	2.200 V	2.341 V
7	NC	2.500 V	3.300 V	3.300 V

BOARD ID Table

Board ID	PCB Revision
0	0.1
1	0.2
2	0.3
3	0.4
4	1.0
5	2.0
6	2A
7	

SKU ID Table

SKU ID	SKU
0	10
1	10G
2	
3	
4	
5	
6	
7	

BTO Option Table

BTO Item	BOM Structure
2nd HDD	2HDD@
LAN	100M@ 1000M@
WLAN	WLAN@
NB	GM@ PM@
BT	BT@
MIC	MIC@
CIR	CIR@
FINGER PRINT	FP@
HDMI	HDMI@
Camera	Camera@
Robson	Robson@
Express Card	NEWCARD@
HD-DVD	3G@

USB PORT LIST

PORT	DEVICE
0	RIGHT USB Port (Samll Board)
1	RIGHT USB Port (Samll Board)
2	3G Card
3	N.C.
4	LEFT USB Port
5	LEFT USB Port
6	Fingerprint or Felica
7	Blue Tooth
8	Internal Camera
9	New Card

THIS SHEET OF ENGINEERING DRAWING IS THE PROPRIETARY PROPERTY OF COMPAL ELECTRONICS, INC. AND CONTAINS CONFIDENTIAL AND TRADE SECRET INFORMATION. THIS SHEET MAY NOT BE TRANSFERED FROM THE CUSTODY OF THE COMPETENT DIVISION OF R&D DEPARTMENT EXCEPT AS AUTHORIZED BY COMPAL ELECTRONICS, INC. NEITHER THIS SHEET NOR THE INFORMATION IT CONTAINS MAY BE USED BY OR DISCLOSED TO ANY THIRD PARTY WITHOUT PRIOR WRITTEN CONSENT OF COMPAL ELECTRONICS, INC.

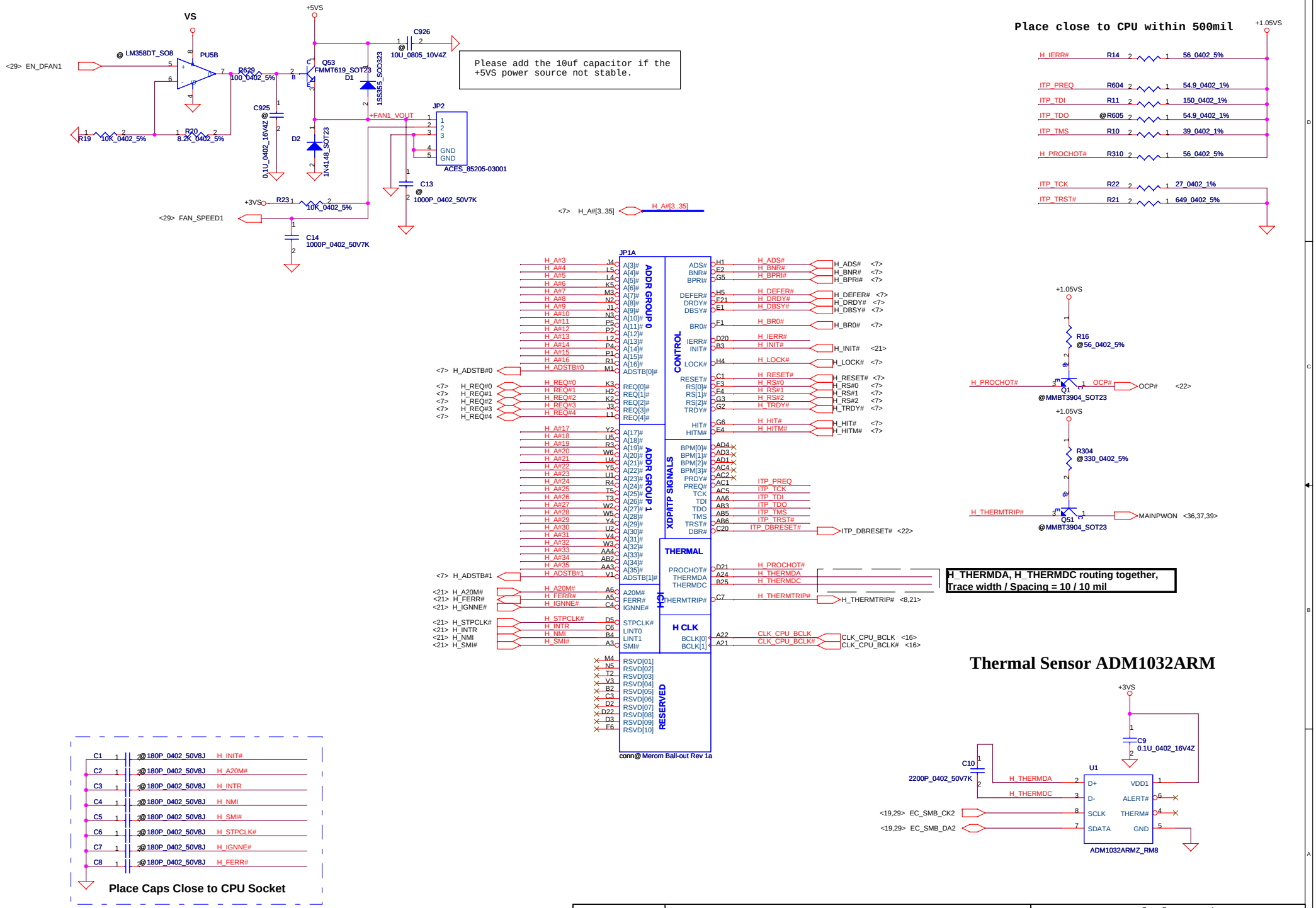

Security Classification	Compal Secret Data		
Issued Date	2006/08/05	Deciphered Date	2007/08/05

THIS SHEET OF ENGINEERING DRAWING IS THE PROPRIETARY PROPERTY OF COMPAL ELECTRONICS, INC. AND CONTAINS CONFIDENTIAL AND TRADE SECRET INFORMATION. THIS SHEET MAY NOT BE TRANSFERED FROM THE CUSTODY OF THE COMPETENT DIVISION OF R&D DEPARTMENT EXCEPT AS AUTHORIZED BY COMPAL ELECTRONICS, INC. NEITHER THIS SHEET NOR THE INFORMATION IT CONTAINS MAY BE USED BY OR DISCLOSED TO ANY THIRD PARTY WITHOUT PRIOR WRITTEN CONSENT OF COMPAL ELECTRONICS, INC.

Compal Electronics, Inc.

Merom(1/3)-AGTL+/XDP

Size | Document Number LA-3481P | Rev 2.0

Date: Tuesday, May 22, 2007 | Sheet 4 of 47

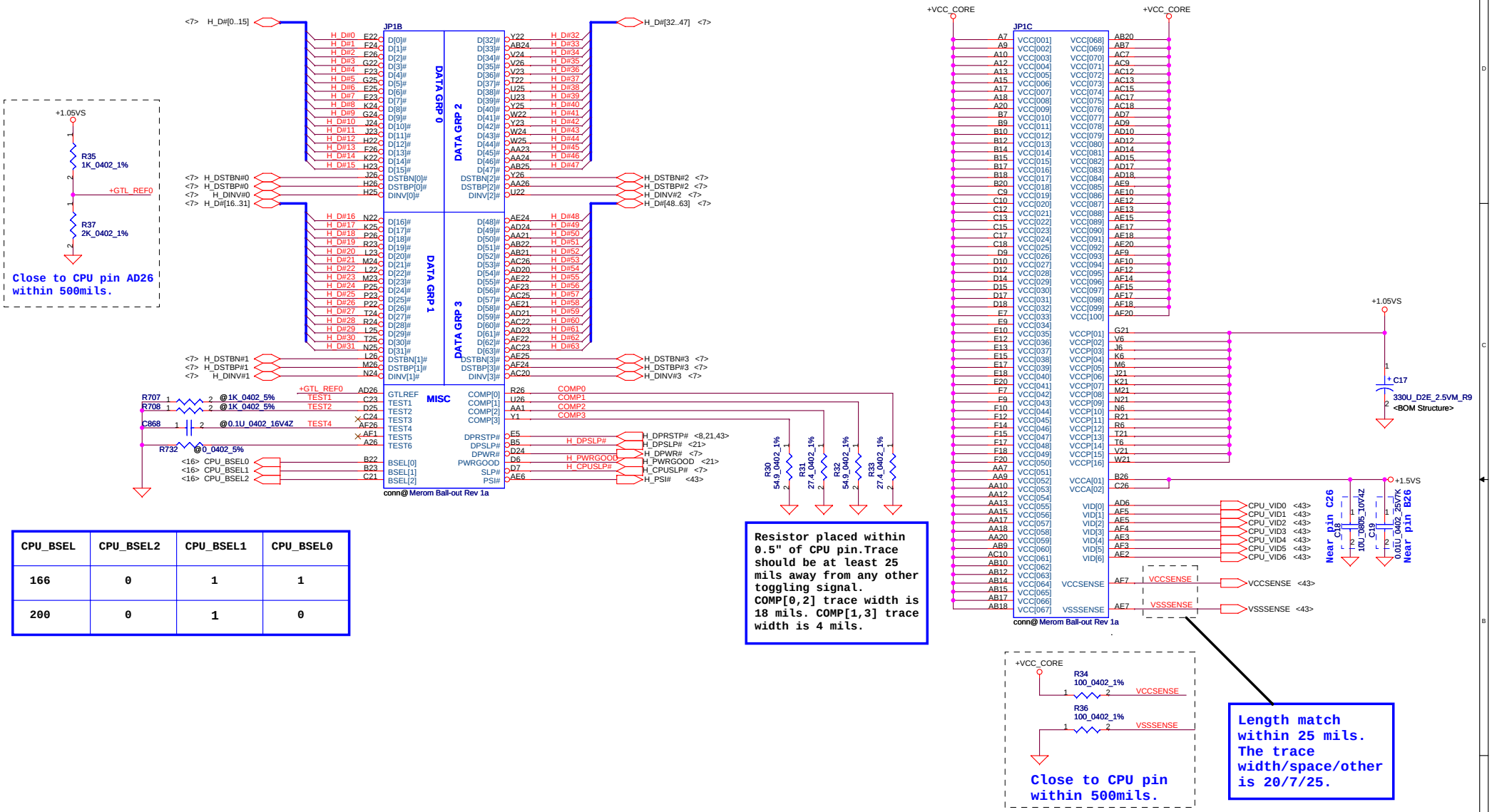

CPU_BSEL	CPU_BSEL2	CPU_BSEL1	CPU_BSEL0
166	0	1	1
200	0	1	0

Security Classification	Compal Secret Data		
Issued Date	2006/08/05	Deciphered Date	2007/08/05

THIS SHEET OF ENGINEERING DRAWING IS THE PROPRIETARY PROPERTY OF COMPAL ELECTRONICS, INC. AND CONTAINS CONFIDENTIAL AND TRADE SECRET INFORMATION. THIS SHEET MAY NOT BE TRANSFERED FROM THE CUSTODY OF THE COMPETENT DIVISION OF R&D DEPARTMENT EXCEPT AS AUTHORIZED BY COMPAL ELECTRONICS, INC. NEITHER THIS SHEET NOR THE INFORMATION IT CONTAINS MAY BE USED BY OR DISCLOSED TO ANY THIRD PARTY WITHOUT PRIOR WRITTEN CONSENT OF COMPAL ELECTRONICS, INC.

Compal Electronics, Inc.

Title: Merom(2/3)-AGTL+/PWR

Size | Document Number: LA-3481P | Rev: 2.0

Date: Tuesday, May 22, 2007 | Sheet 5 of 47

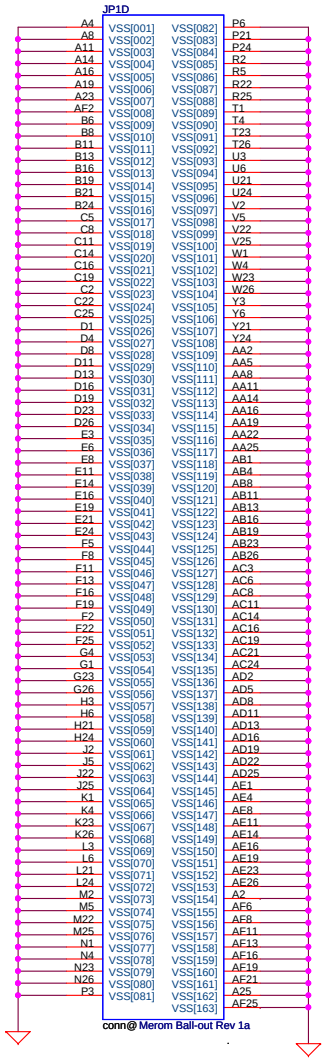

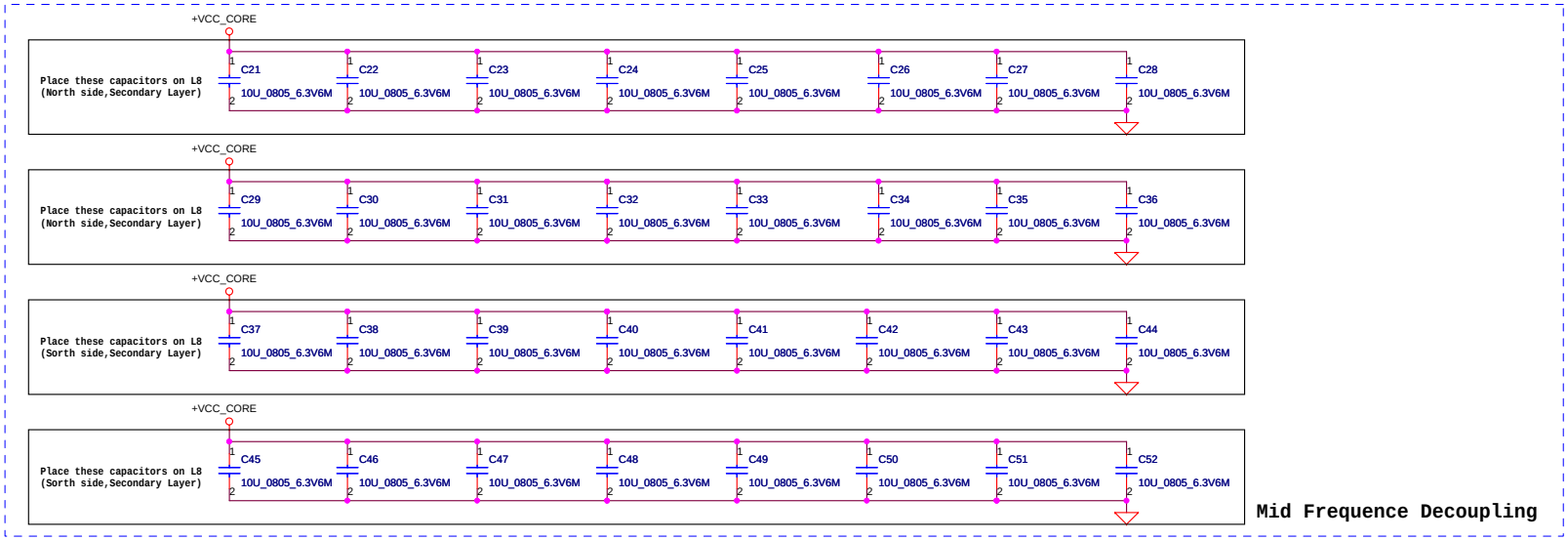

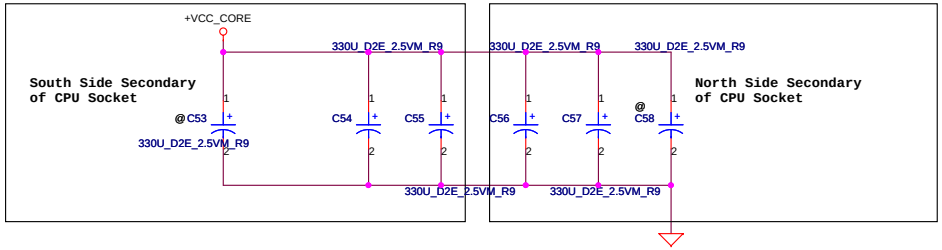

ESR <= 1.5m ohm
Capacitor > 1980uF

330uF ESR 7m ohm X 6 PCS

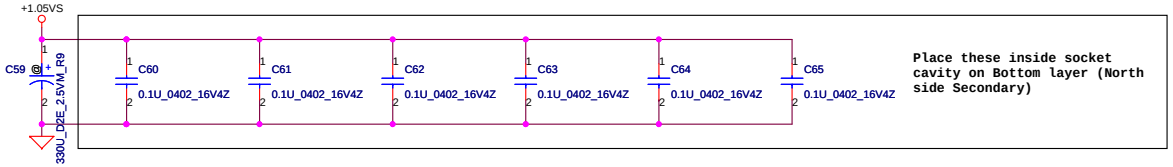

Security Classification	Compal Secret Data		
Issued Date	2006/08/05	Deciphered Date	2007/08/05

THIS SHEET OF ENGINEERING DRAWING IS THE PROPRIETARY PROPERTY OF COMPAL ELECTRONICS, INC. AND CONTAINS CONFIDENTIAL AND TRADE SECRET INFORMATION. THIS SHEET MAY NOT BE TRANSFERED FROM THE CUSTODY OF THE COMPETENT DIVISION OF R&D DEPARTMENT EXCEPT AS AUTHORIZED BY COMPAL ELECTRONICS, INC. NEITHER THIS SHEET NOR THE INFORMATION IT CONTAINS MAY BE USED BY OR DISCLOSED TO ANY THIRD PARTY WITHOUT PRIOR WRITTEN CONSENT OF COMPAL ELECTRONICS, INC.

Compal Electronics, Inc.

Title: **Merom(3/3)-GND&Bypass**

Size | Document Number: **LA-3481P** | Rev: 2.0

Date: Tuesday, May 22, 2007 | Sheet 6 of 47

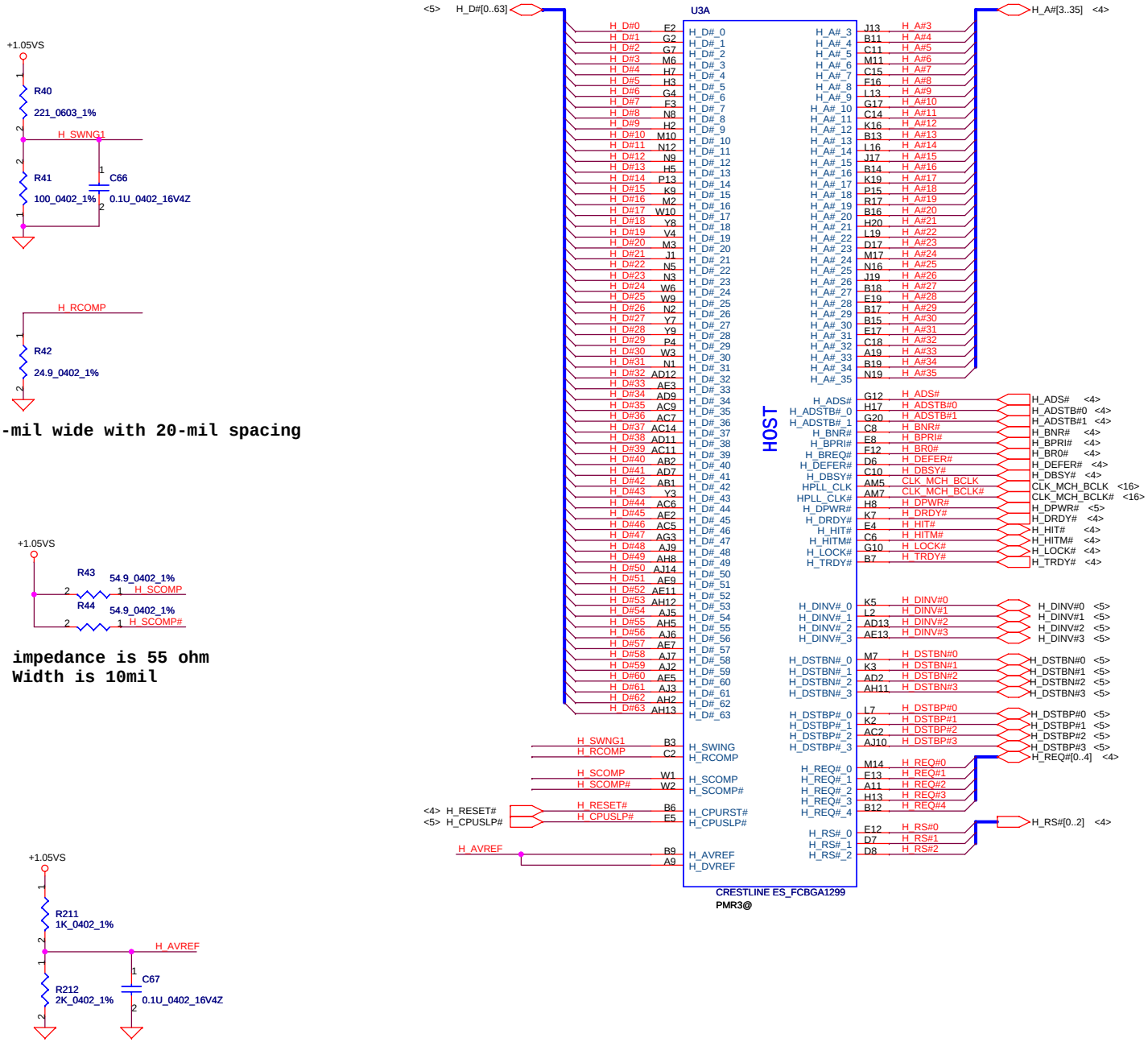

Security Classification	Compal Secret Data			Compal Electronics, Inc.
Issued Date	2006/08/05	Deciphered Date	2007/08/05	Title: Crestline (1/7)
				Size: Document Number: LA-3481P Rev: 2.0
				Date: Tuesday, May 22, 2007 Sheet 7 of 47

THIS SHEET OF ENGINEERING DRAWING IS THE PROPRIETARY PROPERTY OF COMPAL ELECTRONICS, INC. AND CONTAINS CONFIDENTIAL AND TRADE SECRET INFORMATION. THIS SHEET MAY NOT BE TRANSFERED FROM THE CUSTODY OF THE COMPETENT DIVISION OF R&D DEPARTMENT EXCEPT AS AUTHORIZED BY COMPAL ELECTRONICS, INC. NEITHER THIS SHEET NOR THE INFORMATION IT CONTAINS MAY BE USED BY OR DISCLOSED TO ANY THIRD PARTY WITHOUT PRIOR WRITTEN CONSENT OF COMPAL ELECTRONICS, INC.

Strap Pin Table

CFG[2:0]	011 = 667MT/s FSB 010 = 800MT/s FSB
CFG5	0 = DMI x 2 1 = DMI x 4 * (Default)
CFG9	0 = Lane Reversal Enable 1 = Normal Operation * (Default)
CFG[13:12]	00 = Reserved 01 = XOR Mode Enabled 10 = All Z Mode Enabled 11 = Normal Operation * (Default)
CFG16	0 = Dynamic ODT Disabled 1 = Dynamic ODT Enabled * (Default)
CFG19	0 = Normal Operation 1 = DMI Lane Reversal Enable *(Default)
CFG20 (PCIE/SDVO select)	0 = Only PCIE or SDVO is operational. * (Default) 1 = PCIE/SDVO are operating simu.
SDVO_CTRLDATA	0 = No SDVO Device Present * (Default) 1 = SDVO Device Present

Intel recommend 4.02K_1%

CFG[17:3] have internal pull up

CFG[19:18] have internal pull down

Refer Strap Pin Table

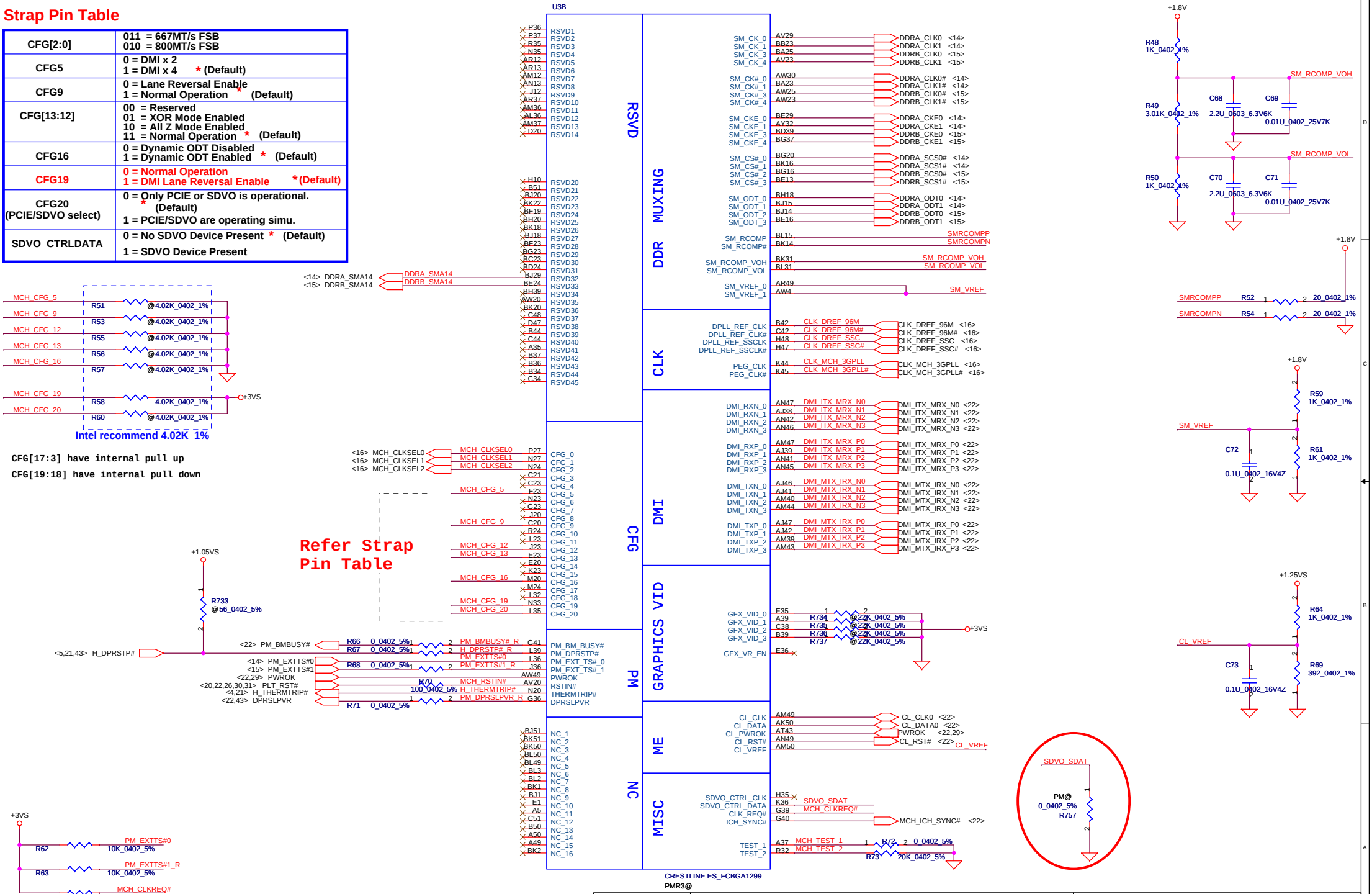

Security Classification	Compal Secret Data		Compal Electronics, Inc.
Issued Date	2006/08/05	Deciphered Date 2007/08/05	Title: Crestline (2/7)
			Size: D; Document Number: LA-3481P; Rev: 2.0
			Date: Tuesday, May 22, 2007; Sheet 8 of 47

THIS SHEET OF ENGINEERING DRAWING IS THE PROPRIETARY PROPERTY OF COMPAL ELECTRONICS, INC. AND CONTAINS CONFIDENTIAL AND TRADE SECRET INFORMATION. THIS SHEET MAY NOT BE TRANSFERED FROM THE CUSTODY OF THE COMPETENT DIVISION OF R&D DEPARTMENT EXCEPT AS AUTHORIZED BY COMPAL ELECTRONICS, INC. NEITHER THIS SHEET NOR THE INFORMATION IT CONTAINS MAY BE USED BY OR DISCLOSED TO ANY THIRD PARTY WITHOUT PRIOR WRITTEN CONSENT OF COMPAL ELECTRONICS, INC.

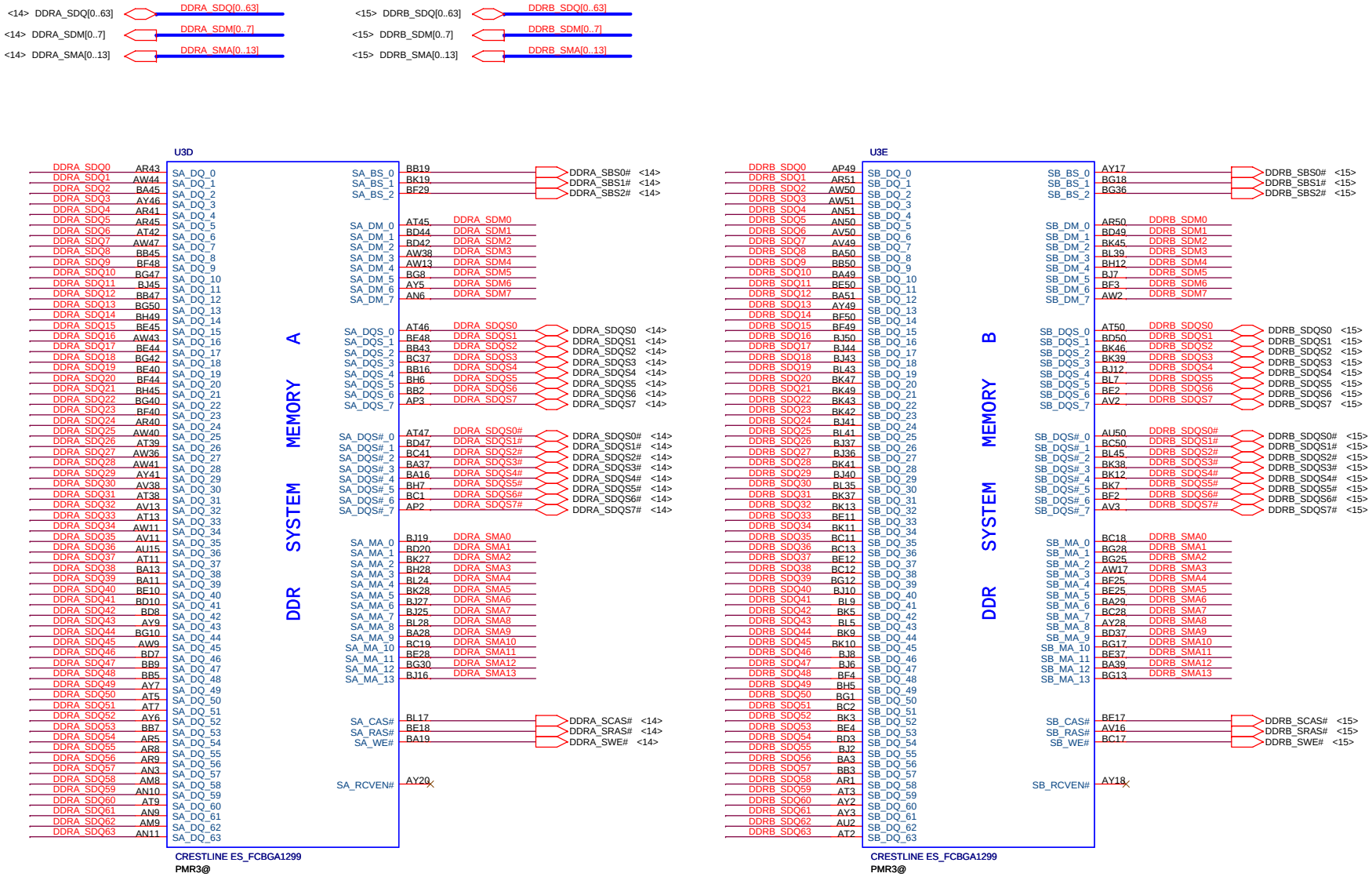

Security Classification	Compal Secret Data			Compal Electronics, Inc.
Issued Date	2006/08/05	Deciphered Date	2007/08/05	Title: Crestline (3/7)
				Size: Document Number: LA-3481P Rev: 2.0
				Date: Tuesday, May 22, 2007 Sheet 9 of 47

THIS SHEET OF ENGINEERING DRAWING IS THE PROPRIETARY PROPERTY OF COMPAL ELECTRONICS, INC. AND CONTAINS CONFIDENTIAL AND TRADE SECRET INFORMATION. THIS SHEET MAY NOT BE TRANSFERED FROM THE CUSTODY OF THE COMPETENT DIVISION OF R&D DEPARTMENT EXCEPT AS AUTHORIZED BY COMPAL ELECTRONICS, INC. NEITHER THIS SHEET NOR THE INFORMATION IT CONTAINS MAY BE USED BY OR DISCLOSED TO ANY THIRD PARTY WITHOUT PRIOR WRITTEN CONSENT OF COMPAL ELECTRONICS, INC.

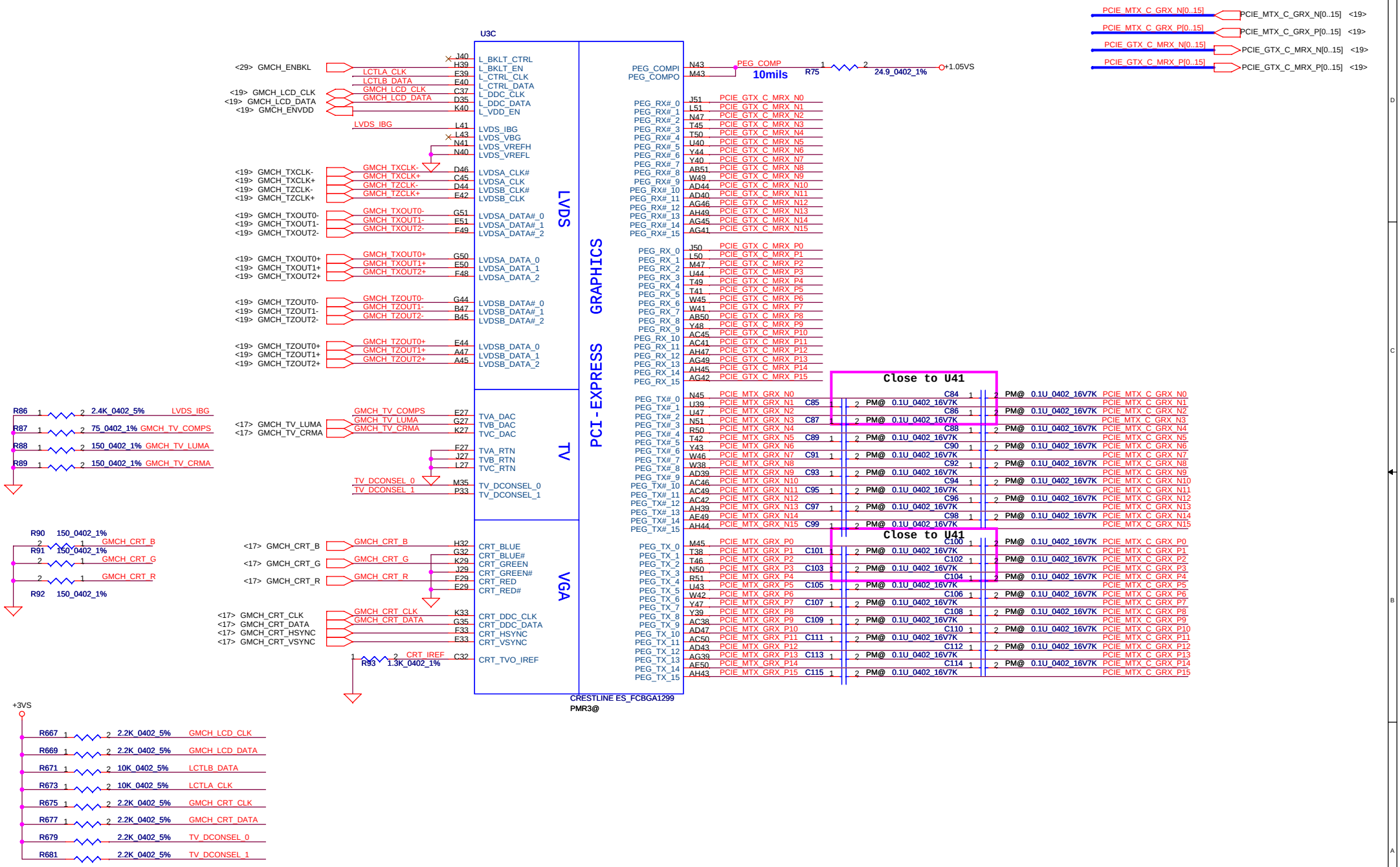

Security Classification	Compal Secret Data		
Issued Date	2006/08/05	Deciphered Date	2007/08/05

THIS SHEET OF ENGINEERING DRAWING IS THE PROPRIETARY PROPERTY OF COMPAL ELECTRONICS, INC. AND CONTAINS CONFIDENTIAL AND TRADE SECRET INFORMATION. THIS SHEET MAY NOT BE TRANSFERED FROM THE CUSTODY OF THE COMPETENT DIVISION OF R&D DEPARTMENT EXCEPT AS AUTHORIZED BY COMPAL ELECTRONICS, INC. NEITHER THIS SHEET NOR THE INFORMATION IT CONTAINS MAY BE USED BY OR DISCLOSED TO ANY THIRD PARTY WITHOUT PRIOR WRITTEN CONSENT OF COMPAL ELECTRONICS, INC.

Compal Electronics, Inc.

Title: Crestline(4/7)

Size | Document Number: LA-3481P | Rev: 2.0

Date: Tuesday, May 22, 2007 | Sheet 10 of 47

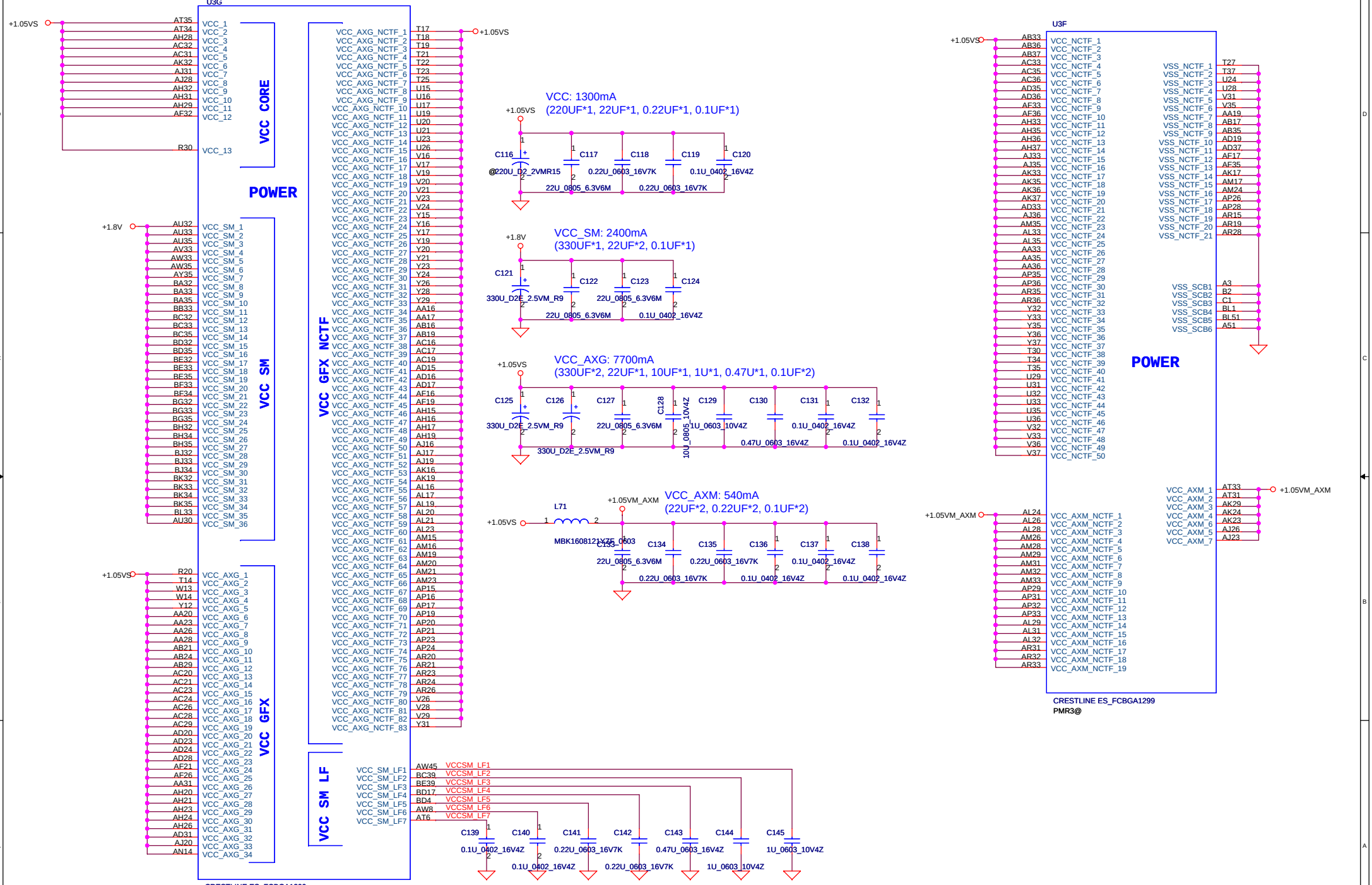

Security Classification	Compal Secret Data		
Issued Date	2006/08/05	Deciphered Date	2007/08/05

THIS SHEET OF ENGINEERING DRAWING IS THE PROPRIETARY PROPERTY OF COMPAL ELECTRONICS, INC. AND CONTAINS CONFIDENTIAL AND TRADE SECRET INFORMATION. THIS SHEET MAY NOT BE TRANSFERED FROM THE CUSTODY OF THE COMPETENT DIVISION OF R&D DEPARTMENT EXCEPT AS AUTHORIZED BY COMPAL ELECTRONICS, INC. NEITHER THIS SHEET NOR THE INFORMATION IT CONTAINS MAY BE USED BY OR DISCLOSED TO ANY THIRD PARTY WITHOUT PRIOR WRITTEN CONSENT OF COMPAL ELECTRONICS, INC.

Compal Electronics, Inc.

Title: Crestline (5/7)

Size | Document Number: LA-3481P | Rev: 2.0

Date: Tuesday, May 22, 2007 | Sheet 11 of 47

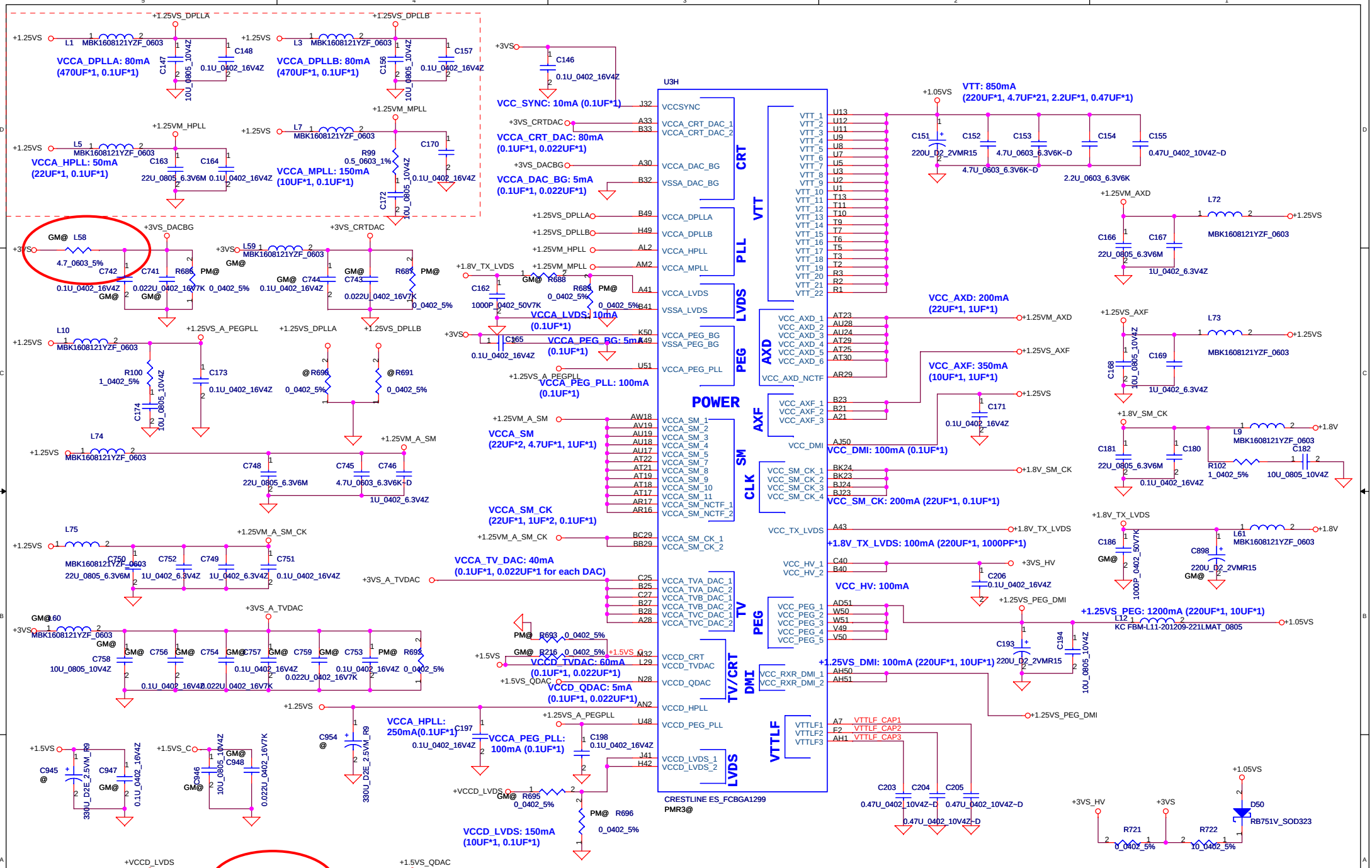

Security Classification	Compal Secret Data		
Issued Date	2006/08/05	Deciphered Date	2007/08/05

THIS SHEET OF ENGINEERING DRAWING IS THE PROPRIETARY PROPERTY OF COMPAL ELECTRONICS, INC. AND CONTAINS CONFIDENTIAL AND TRADE SECRET INFORMATION. THIS SHEET MAY NOT BE TRANSFERED FROM THE CUSTODY OF THE COMPETENT DIVISION OF R&D DEPARTMENT EXCEPT AS AUTHORIZED BY COMPAL ELECTRONICS, INC. NEITHER THIS SHEET NOR THE INFORMATION IT CONTAINS MAY BE USED BY OR DISCLOSED TO ANY THIRD PARTY WITHOUT PRIOR WRITTEN CONSENT OF COMPAL ELECTRONICS, INC.

Compal Electronics, Inc.

Title: Crestline (6/7)

Size: | Document Number: LA-3481P | Rev: 2.0

Date: Saturday, June 23, 2007 | Sheet 12 of 47

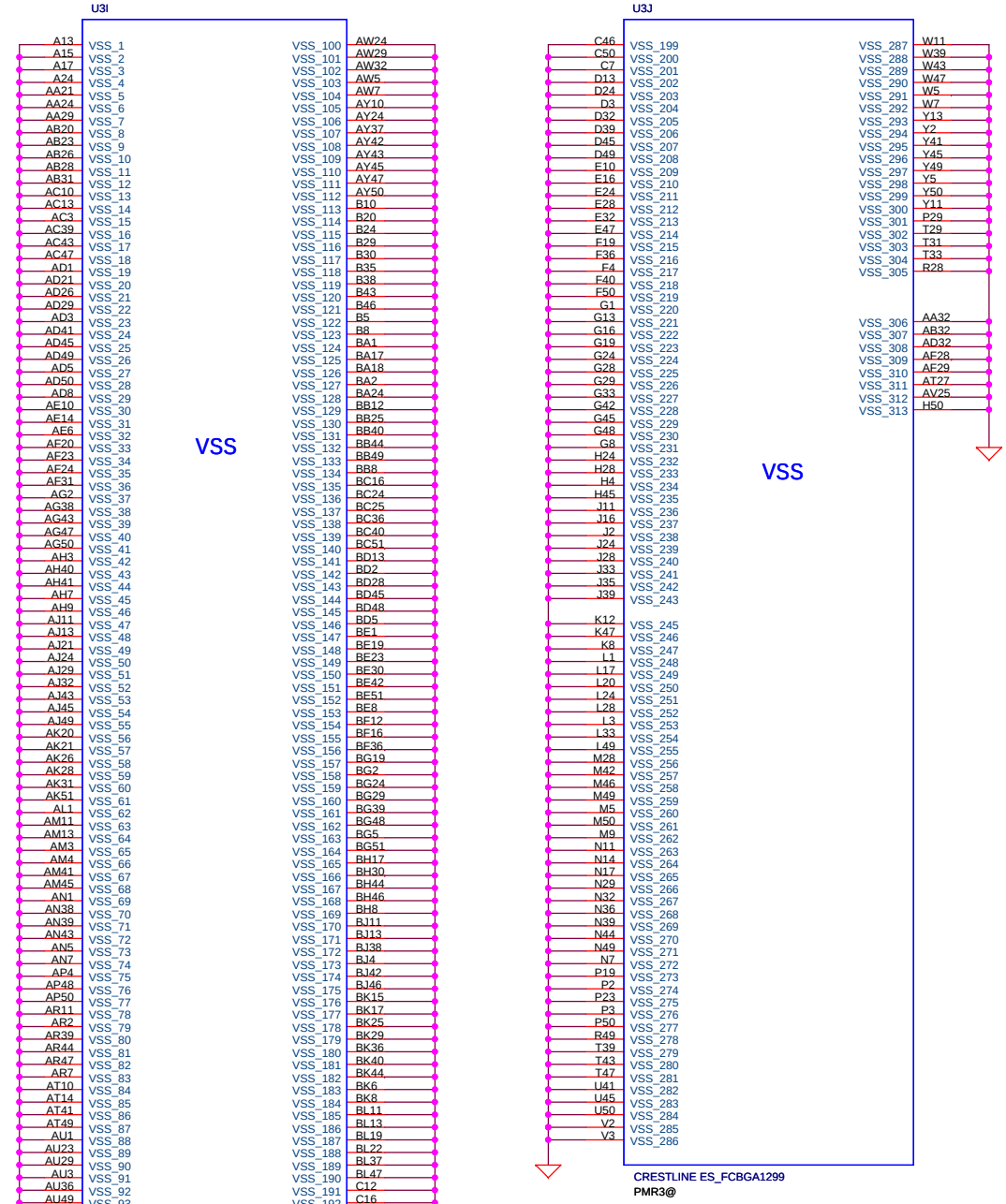

Security Classification	Compal Secret Data			Compal Electronics, Inc.
Issued Date	2006/08/05	Deciphered Date	2007/08/05	Title: Crestline (7/7)
				Size / Document Number: LA-3481P / Rev: 2.0
				Date: Tuesday, May 22, 2007 / Sheet 13 of 47

THIS SHEET OF ENGINEERING DRAWING IS THE PROPRIETARY PROPERTY OF COMPAL ELECTRONICS, INC. AND CONTAINS CONFIDENTIAL AND TRADE SECRET INFORMATION. THIS SHEET MAY NOT BE TRANSFERED FROM THE CUSTODY OF THE COMPETENT DIVISION OF R&D DEPARTMENT EXCEPT AS AUTHORIZED BY COMPAL ELECTRONICS, INC. NEITHER THIS SHEET NOR THE INFORMATION IT CONTAINS MAY BE USED BY OR DISCLOSED TO ANY THIRD PARTY WITHOUT PRIOR WRITTEN CONSENT OF COMPAL ELECTRONICS, INC.

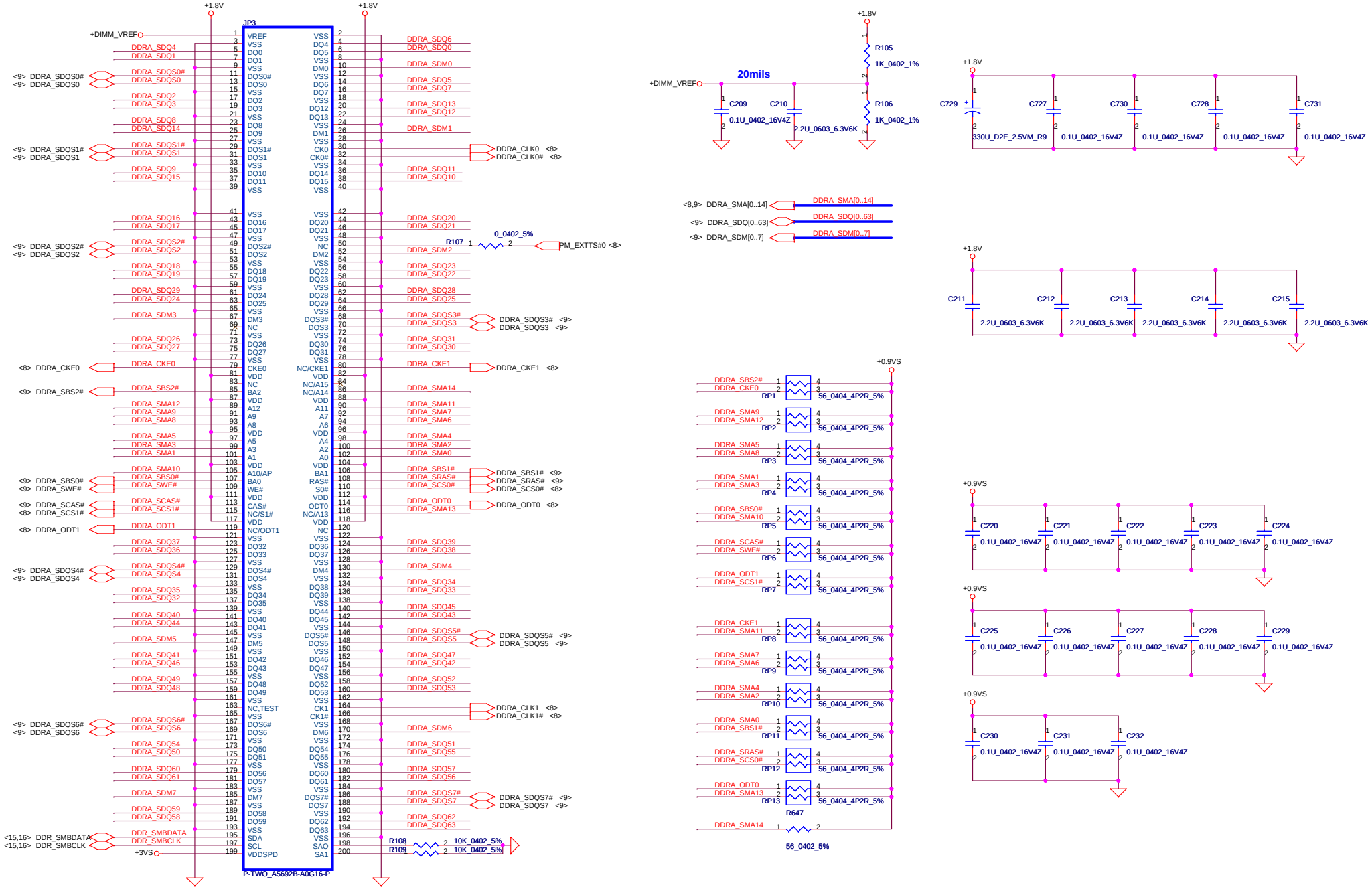

DIMM0 STD H:9.2mm (BOT)

Security Classification	Compal Secret Data			Compal Electronics, Inc.
Issued Date	2006/08/05	Deciphered Date	2007/08/05	Title: DDRII-SODIMM0
THIS SHEET OF ENGINEERING DRAWING IS THE PROPRIETARY PROPERTY OF COMPAL ELECTRONICS, INC. AND CONTAINS CONFIDENTIAL AND TRADE SECRET INFORMATION. THIS SHEET MAY NOT BE TRANSFERED FROM THE CUSTODY OF THE COMPETENT DIVISION OF R&D DEPARTMENT EXCEPT AS AUTHORIZED BY COMPAL ELECTRONICS, INC. NEITHER THIS SHEET NOR THE INFORMATION IT CONTAINS MAY BE USED BY OR DISCLOSED TO ANY THIRD PARTY WITHOUT PRIOR WRITTEN CONSENT OF COMPAL ELECTRONICS, INC.				Size: A3 / Document Number: LA-3481P / Rev: 2.0
				Date: Tuesday, May 22, 2007 / Sheet 14 of 47

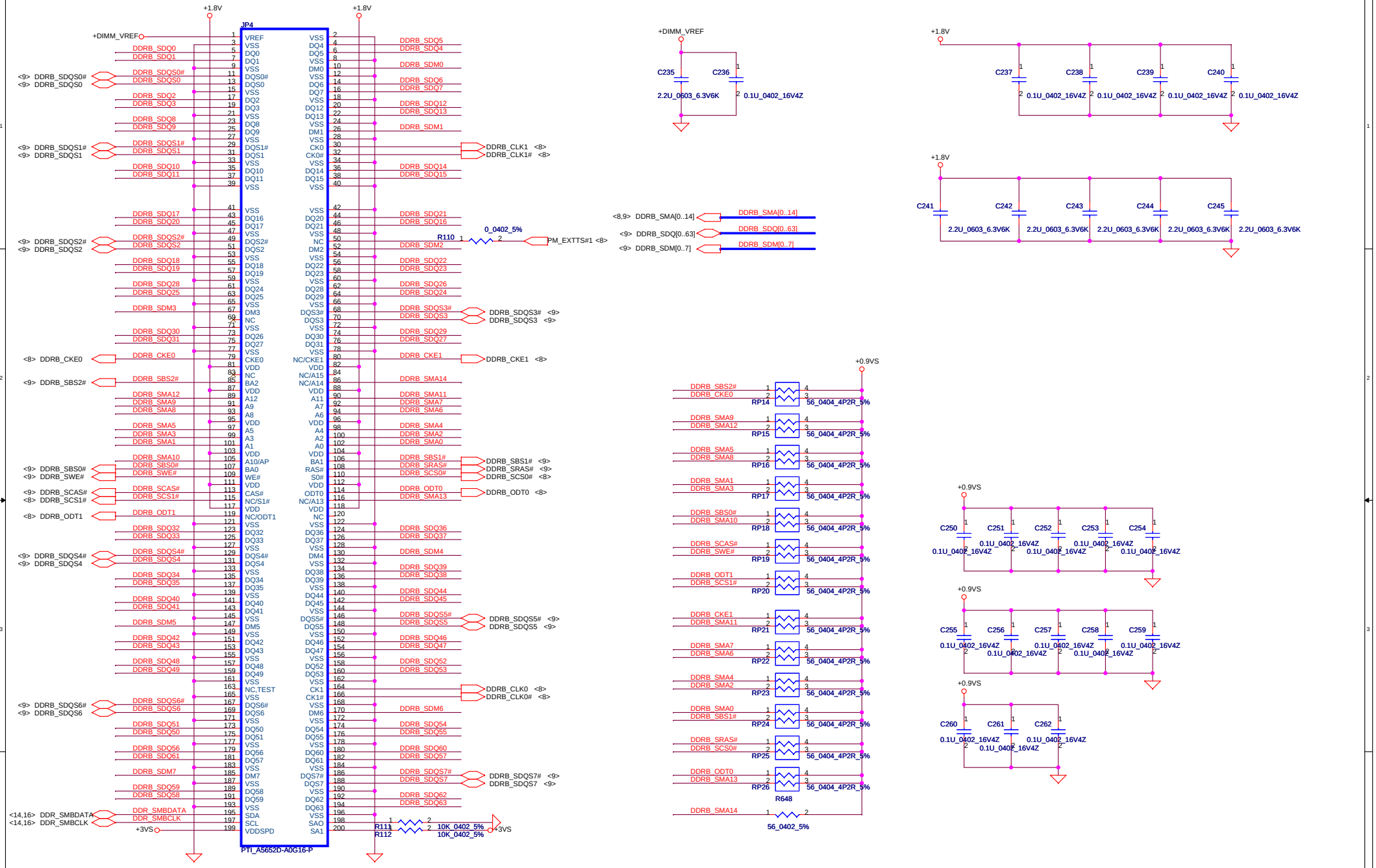

Security Classification	Compal Secret Data			Compal Electronics, Inc.
Issued Date	2006/08/05	Deciphered Date	2007/08/05	Title: DDRII-SODIMM1
THIS SHEET OF ENGINEERING DRAWING IS THE PROPRIETARY PROPERTY OF COMPAL ELECTRONICS, INC. AND CONTAINS CONFIDENTIAL AND TRADE SECRET INFORMATION. THIS SHEET MAY NOT BE TRANSFERED FROM THE CUSTODY OF THE COMPETENT DIVISION OF R&D DEPARTMENT EXCEPT AS AUTHORIZED BY COMPAL ELECTRONICS, INC. NEITHER THIS SHEET NOR THE INFORMATION IT CONTAINS MAY BE USED BY OR DISCLOSED TO ANY THIRD PARTY WITHOUT PRIOR WRITTEN CONSENT OF COMPAL ELECTRONICS, INC.				Size / Document Number: LA-3481P / Rev: 2.0
				Date: Tuesday, May 22, 2007 / Sheet 15 of 47

FSLC CLKSEL2	FSLB CLKSEL1	FSLA CLKSEL0	CPU MHz	SRC MHz	PCI MHz
0	1	0	200	100	33.3
0	1	1	166	100	33.3

FSB Frequency Selet:

CPU Driven	Stuff	R118	R130	R144			
*(Default)	No Stuff	R115	R119	R124	R145		
667MHz	Stuff	R1689	R1696	R1734	R1737		
	No Stuff	R1694	R1705	R1716	R1719	R1726	
800MHz	Stuff			R1734	R1737		
	No Stuff	R1689	R1694	R1696	R1705	R1716	R1726	R1719

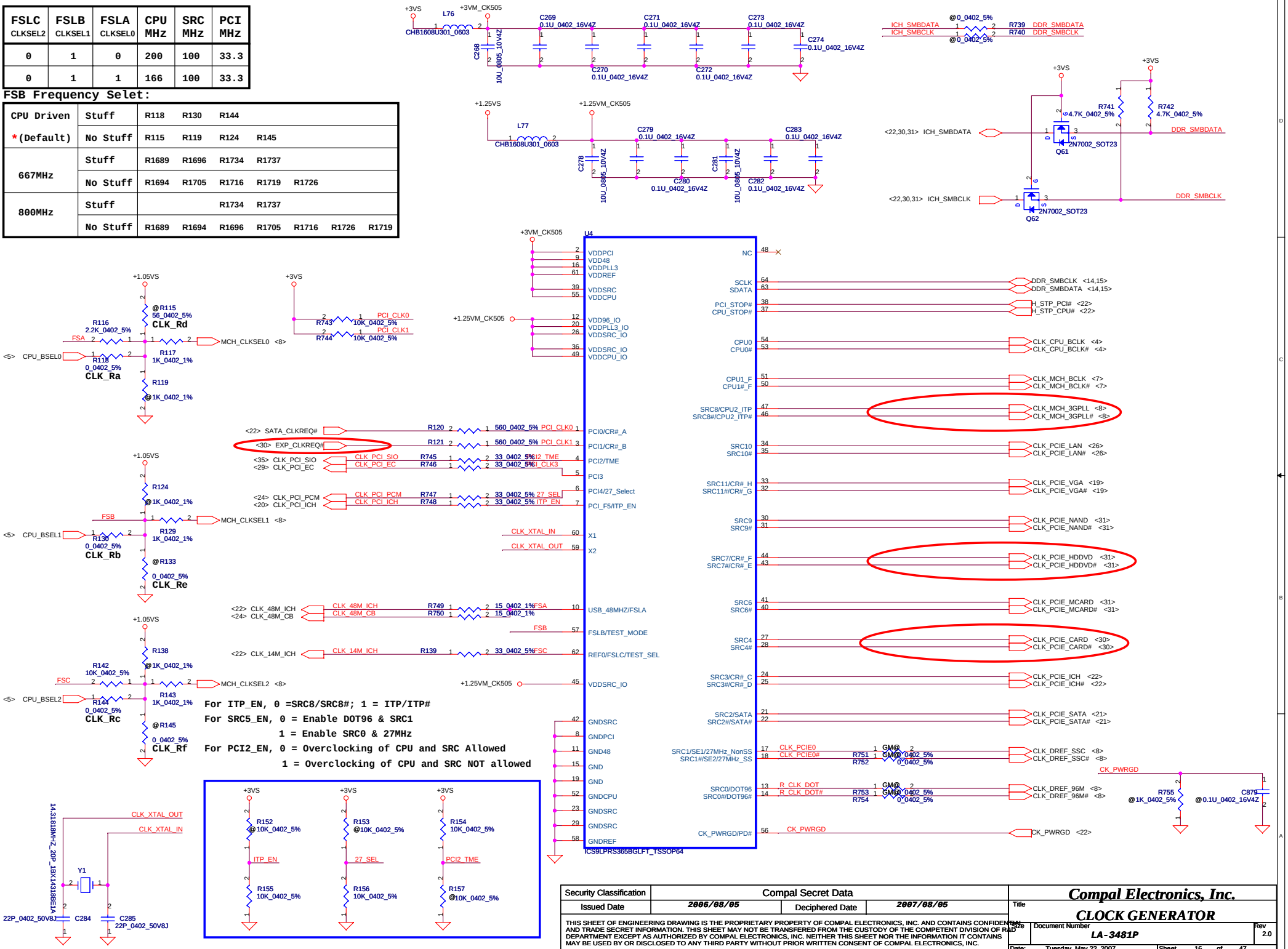

For ITP_EN, 0 =SRC8/SRC8#; 1 = ITP/ITP#
For SRC5_EN, 0 = Enable DOT96 & SRC1
1 = Enable SRC0 & 27MHz
For PCI2_EN, 0 = Overclocking of CPU and SRC Allowed
1 = Overclocking of CPU and SRC NOT allowed

Security Classification	Compal Secret Data		
Issued Date	2006/08/05	Deciphered Date	2007/08/05

THIS SHEET OF ENGINEERING DRAWING IS THE PROPRIETARY PROPERTY OF COMPAL ELECTRONICS, INC. AND CONTAINS CONFIDENTIAL AND TRADE SECRET INFORMATION. THIS SHEET MAY NOT BE TRANSFERED FROM THE CUSTODY OF THE COMPETENT DIVISION OF R&D DEPARTMENT EXCEPT AS AUTHORIZED BY COMPAL ELECTRONICS, INC. NEITHER THIS SHEET NOR THE INFORMATION IT CONTAINS MAY BE USED BY OR DISCLOSED TO ANY THIRD PARTY WITHOUT PRIOR WRITTEN CONSENT OF COMPAL ELECTRONICS, INC.

Compal Electronics, Inc.

Title: **CLOCK GENERATOR**

Size | Document Number: **LA-3481P** | Rev: 2.0

Date: Tuesday, May 22, 2007 | Sheet 16 of 47

CRT CONNECTOR

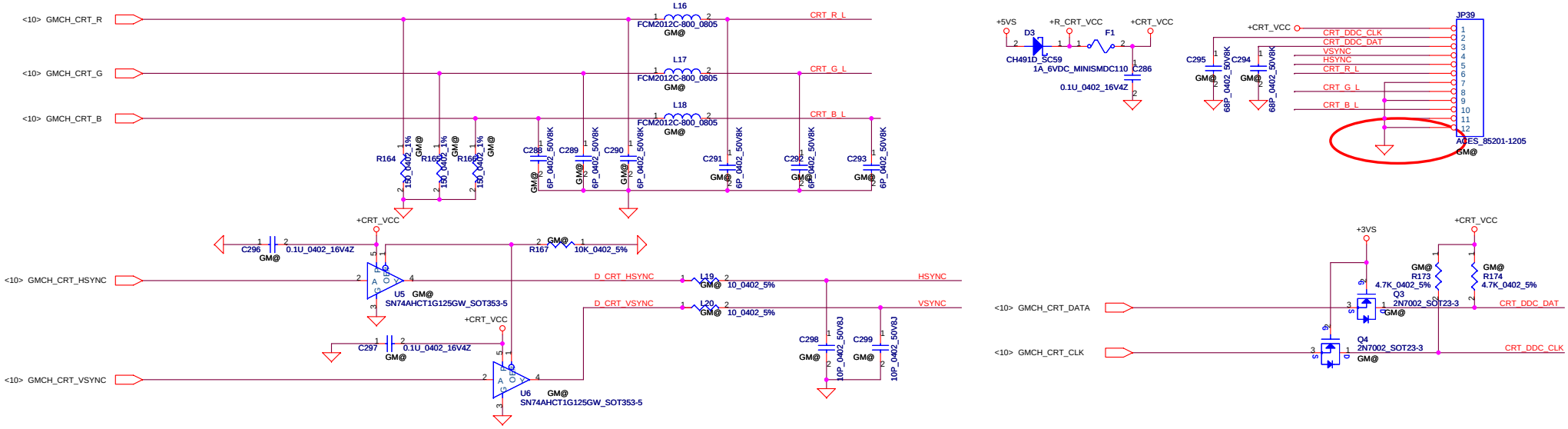

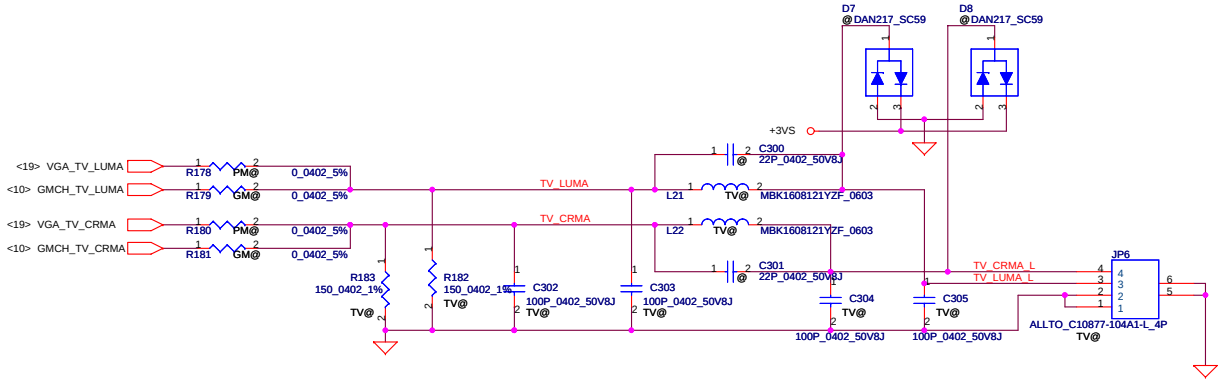

TV-OUT Conn.

1. Y ground
2. C ground
3. Y (luminance+sync)
4. C (crominance)

Security Classification	Compal Secret Data		
Issued Date	2006/08/05	Deciphered Date	2007/08/05

THIS SHEET OF ENGINEERING DRAWING IS THE PROPRIETARY PROPERTY OF COMPAL ELECTRONICS, INC. AND CONTAINS CONFIDENTIAL AND TRADE SECRET INFORMATION. THIS SHEET MAY NOT BE TRANSFERED FROM THE CUSTODY OF THE COMPETENT DIVISION OF R&D DEPARTMENT EXCEPT AS AUTHORIZED BY COMPAL ELECTRONICS, INC. NEITHER THIS SHEET NOR THE INFORMATION IT CONTAINS MAY BE USED BY OR DISCLOSED TO ANY THIRD PARTY WITHOUT PRIOR WRITTEN CONSENT OF COMPAL ELECTRONICS, INC.

Compal Electronics, Inc.

Title: CRT & TVout Connector

Size | Document Number: LA-3481P | Rev: 2.0

Date: Wednesday, May 23, 2007 | Sheet 17 of 47

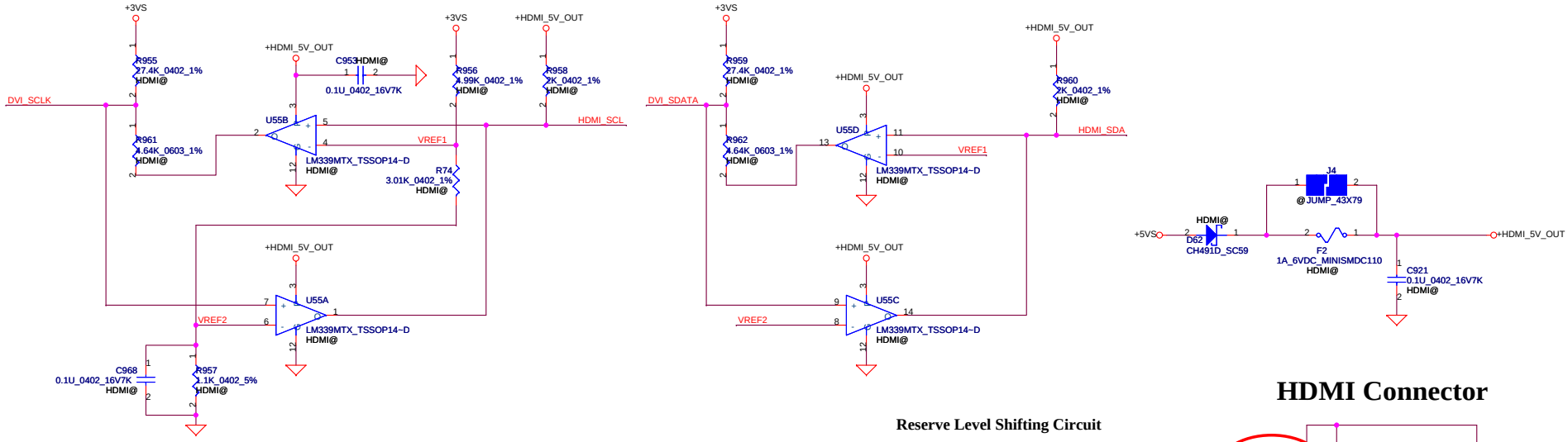

Reserve Level Shifting Circuit

HDMI Connector

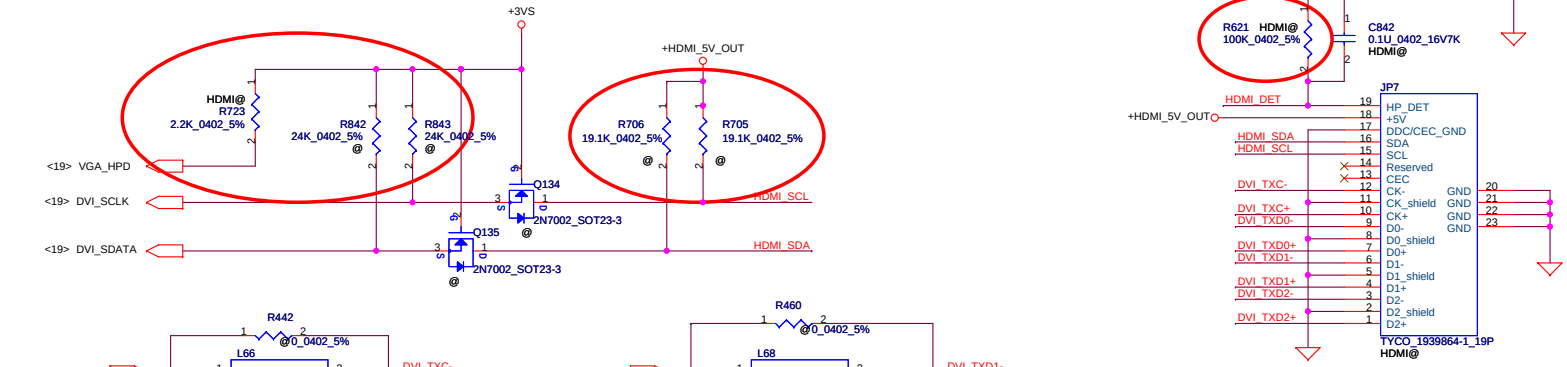

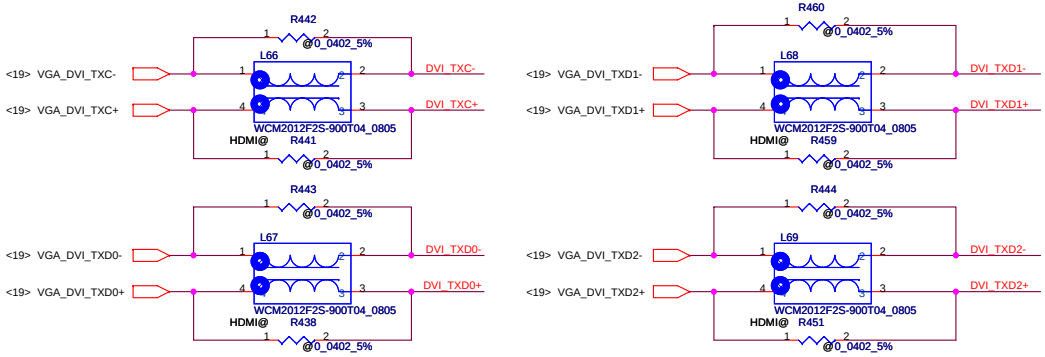

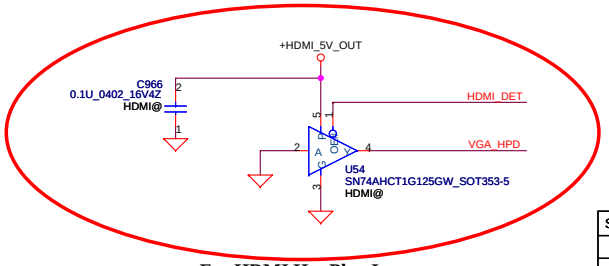

For HDMI Hot Plug Issue

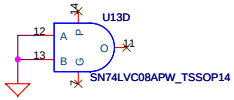

Security Classification	Compal Secret Data			Compal Electronics, Inc.
Issued Date	2006/06/30	Deciphered Date	2007/06/30	Title: Sil1392&HDMI Connector
THIS SHEET OF ENGINEERING DRAWING IS THE PROPRIETARY PROPERTY OF COMPAL ELECTRONICS, INC. AND CONTAINS CONFIDENTIAL AND TRADE SECRET INFORMATION. THIS SHEET MAY NOT BE TRANSFERED FROM THE CUSTODY OF THE COMPETENT DIVISION OF R&D DEPARTMENT EXCEPT AS AUTHORIZED BY COMPAL ELECTRONICS, INC. NEITHER THIS SHEET NOR THE INFORMATION IT CONTAINS MAY BE USED BY OR DISCLOSED TO ANY THIRD PARTY WITHOUT PRIOR WRITTEN CONSENT OF COMPAL ELECTRONICS, INC.				Size: Custom; Document Number: LA-3481P; Rev: 2.0
				Date: Saturday, June 23, 2007; Sheet 18 of 47

LCD POWER CIRCUIT

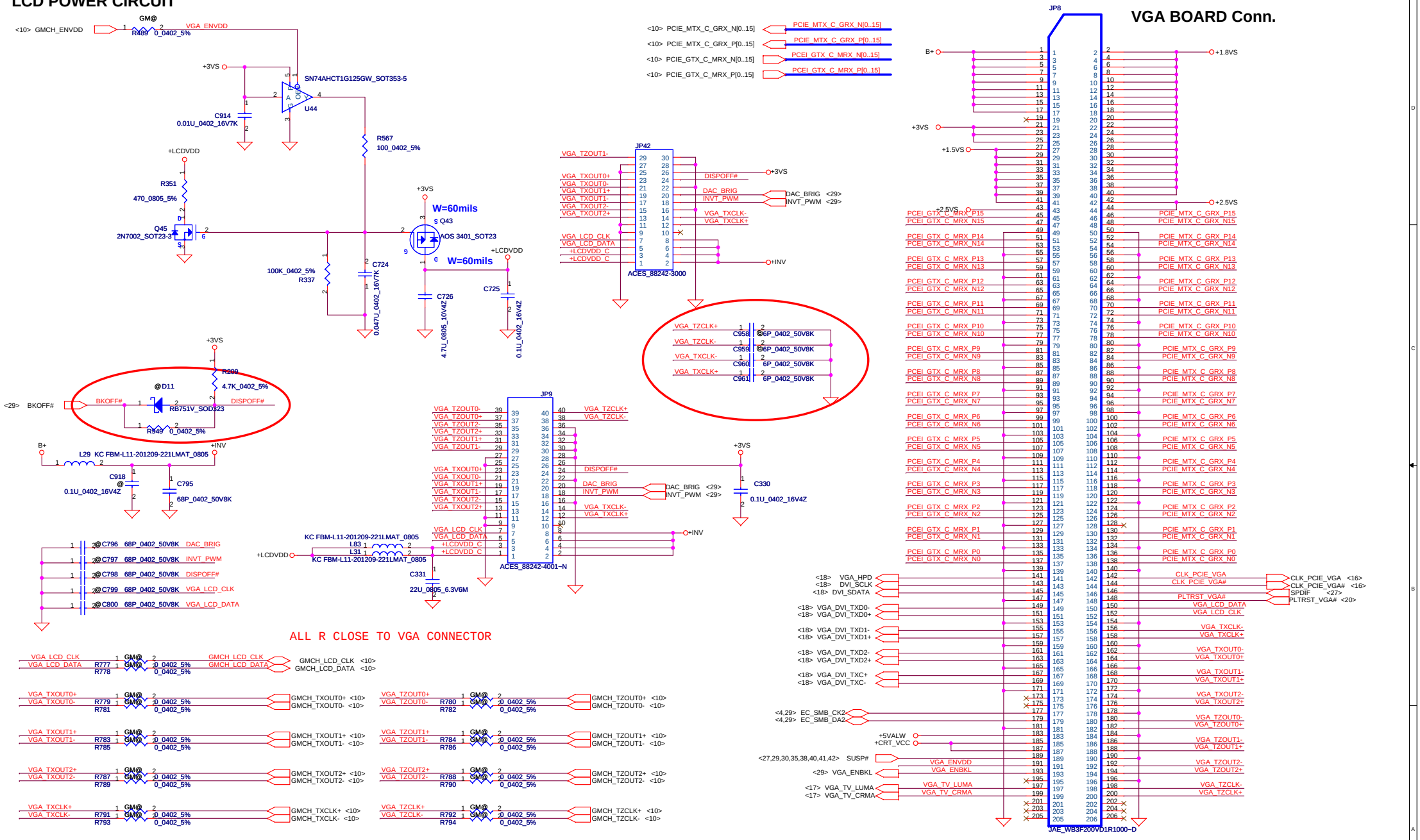

Security Classification	Compal Secret Data		
Issued Date	2006/08/05	Deciphered Date	2007/08/05

THIS SHEET OF ENGINEERING DRAWING IS THE PROPRIETARY PROPERTY OF COMPAL ELECTRONICS, INC. AND CONTAINS CONFIDENTIAL AND TRADE SECRET INFORMATION. THIS SHEET MAY NOT BE TRANSFERED FROM THE CUSTODY OF THE COMPETENT DIVISION OF R&D DEPARTMENT EXCEPT AS AUTHORIZED BY COMPAL ELECTRONICS, INC. NEITHER THIS SHEET NOR THE INFORMATION IT CONTAINS MAY BE USED BY OR DISCLOSED TO ANY THIRD PARTY WITHOUT PRIOR WRITTEN CONSENT OF COMPAL ELECTRONICS, INC.

Compal Electronics, Inc.

Title: VGA CONN

Size | Document Number: LA-3481P | Rev: 2.0

Date: Saturday, June 23, 2007 | Sheet 19 of 47

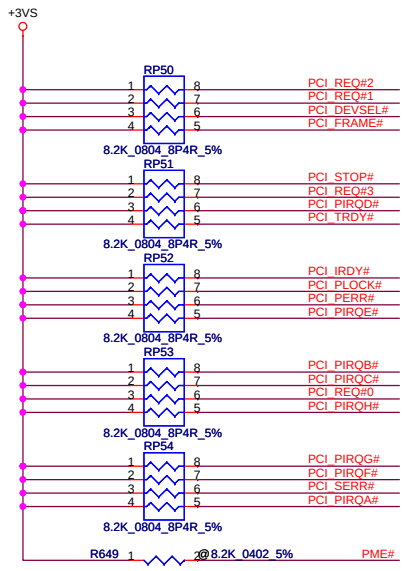

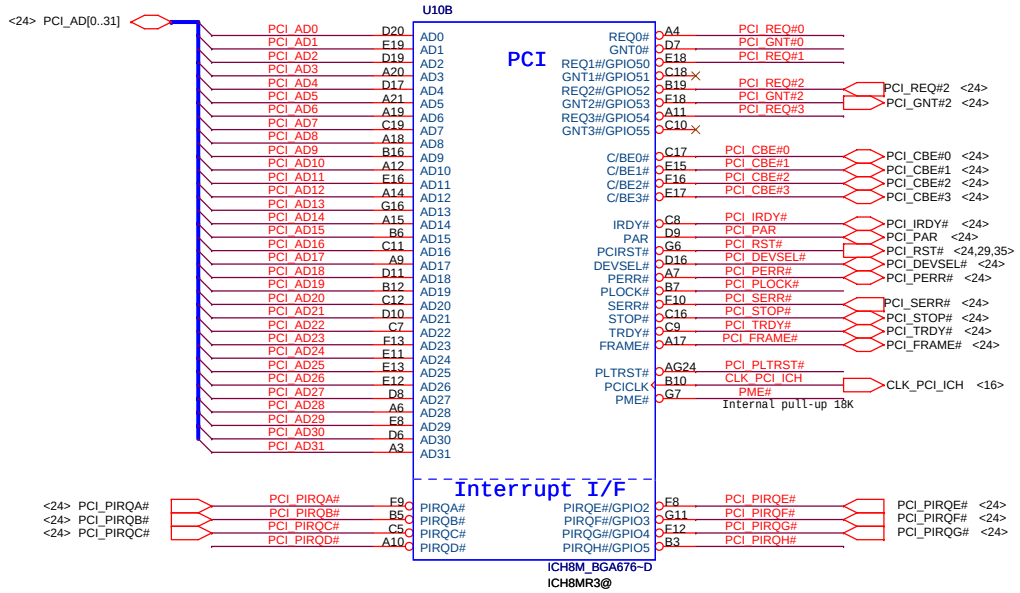

Boot BIOS Strap		
PCI_GNT0#	SPI_CS#0	Boot BIOS Location
0	1	SPI
1	0	PCI
1	1	LPC *

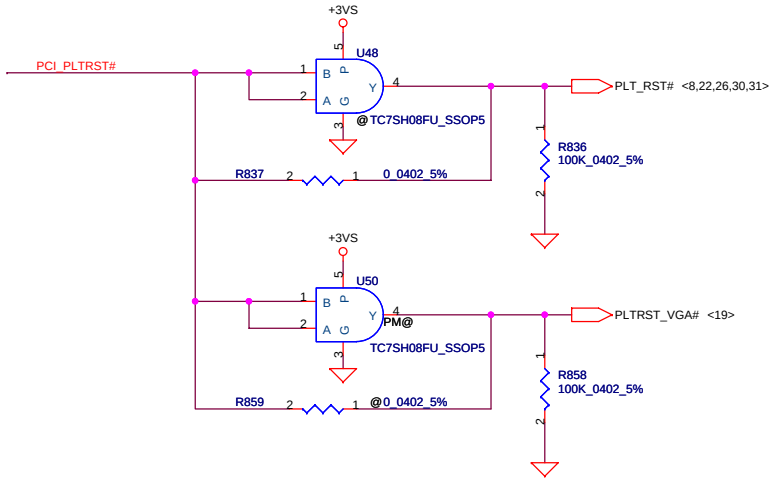

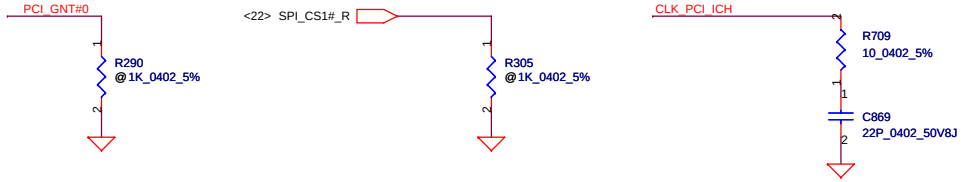

Security Classification	Compal Secret Data			Compal Electronics, Inc.
Issued Date	2006/08/05	Deciphered Date	2007/08/05	Title: ICH8-M(1/4)
				Size: Document Number: LA-3481P Rev: 2.0
				Date: Tuesday, May 22, 2007 Sheet 20 of 47

THIS SHEET OF ENGINEERING DRAWING IS THE PROPRIETARY PROPERTY OF COMPAL ELECTRONICS, INC. AND CONTAINS CONFIDENTIAL AND TRADE SECRET INFORMATION. THIS SHEET MAY NOT BE TRANSFERED FROM THE CUSTODY OF THE COMPETENT DIVISION OF R&D DEPARTMENT EXCEPT AS AUTHORIZED BY COMPAL ELECTRONICS, INC. NEITHER THIS SHEET NOR THE INFORMATION IT CONTAINS MAY BE USED BY OR DISCLOSED TO ANY THIRD PARTY WITHOUT PRIOR WRITTEN CONSENT OF COMPAL ELECTRONICS, INC.

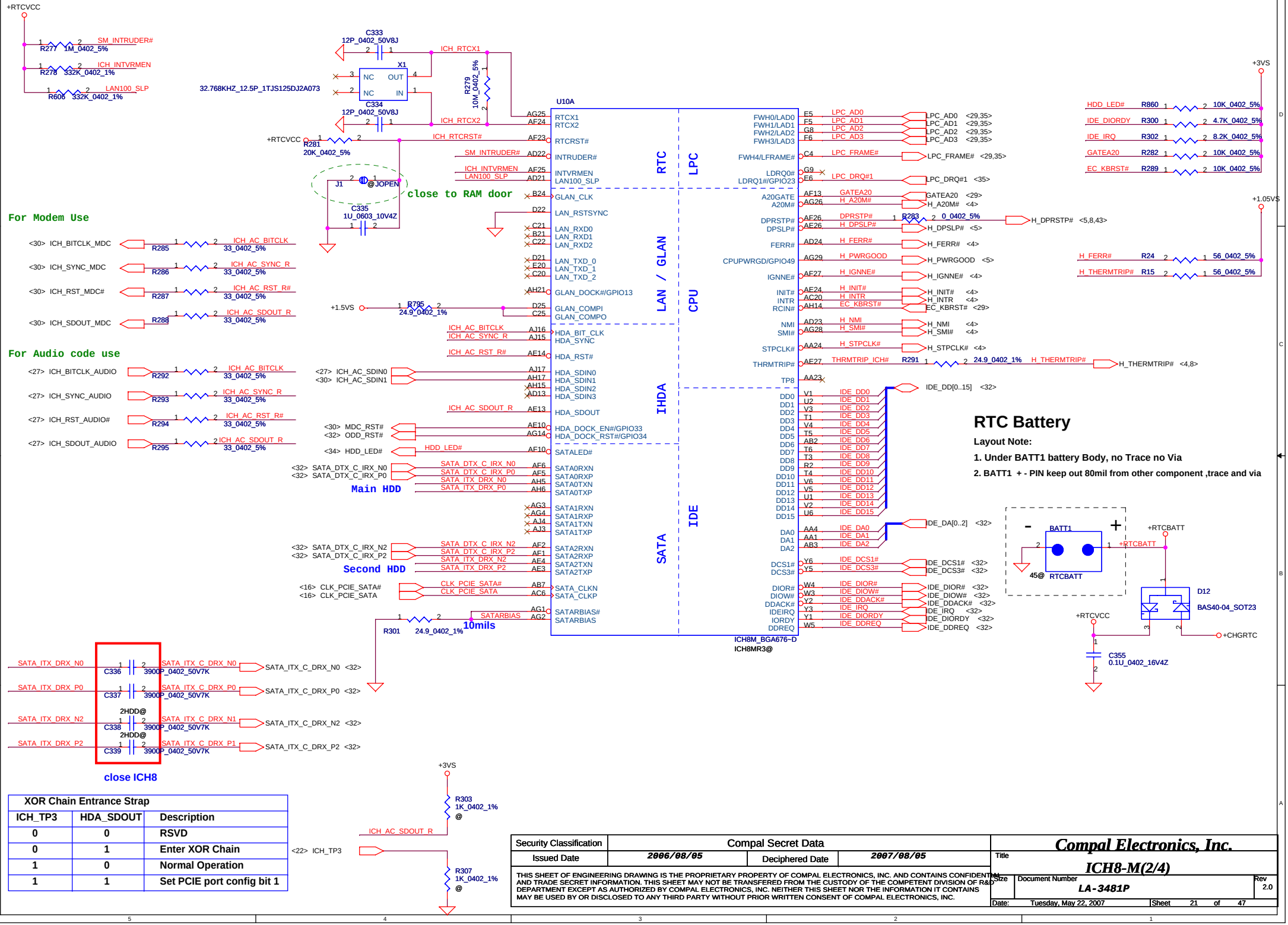

XOR Chain Entrance Strap		
ICH_TP3	HDA_SDOUT	Description
0	0	RSVD
0	1	Enter XOR Chain
1	0	Normal Operation
1	1	Set PCIE port config bit 1

Security Classification	Compal Secret Data		
Issued Date	2006/08/05	Deciphered Date	2007/08/05

THIS SHEET OF ENGINEERING DRAWING IS THE PROPRIETARY PROPERTY OF COMPAL ELECTRONICS, INC. AND CONTAINS CONFIDENTIAL AND TRADE SECRET INFORMATION. THIS SHEET MAY NOT BE TRANSFERED FROM THE CUSTODY OF THE COMPETENT DIVISION OF R&D DEPARTMENT EXCEPT AS AUTHORIZED BY COMPAL ELECTRONICS, INC. NEITHER THIS SHEET NOR THE INFORMATION IT CONTAINS MAY BE USED BY OR DISCLOSED TO ANY THIRD PARTY WITHOUT PRIOR WRITTEN CONSENT OF COMPAL ELECTRONICS, INC.

Compal Electronics, Inc.

Title: ICH8-M(2/4)

Size | Document Number: LA-3481P | Rev: 2.0

Date: Tuesday, May 22, 2007 | Sheet 21 of 47

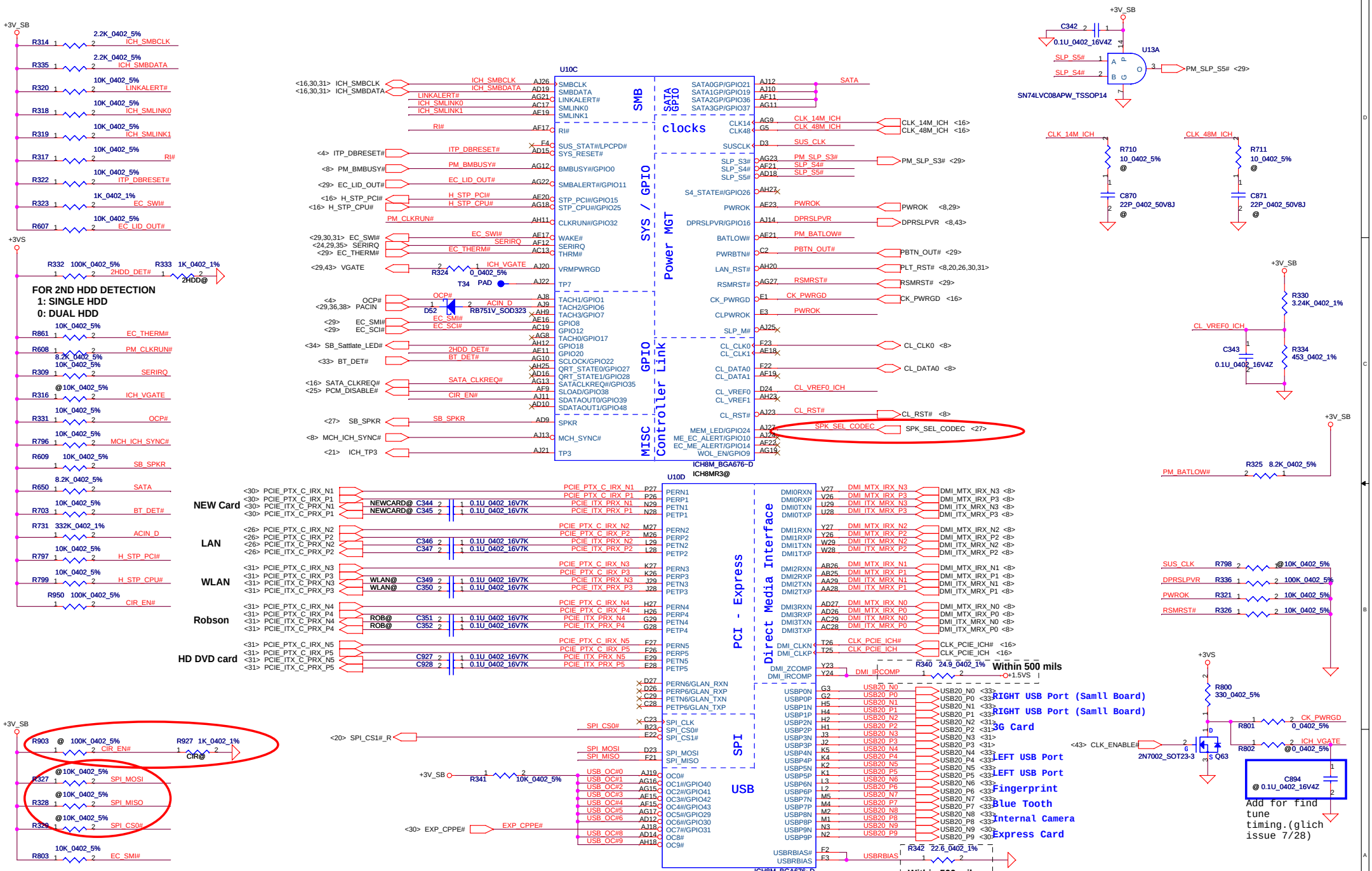

Security Classification	Compal Secret Data			Compal Electronics, Inc.
Issued Date	2006/08/05	Deciphered Date	2007/08/05	Title: ICH8-M(3/4)
THIS SHEET OF ENGINEERING DRAWING IS THE PROPRIETARY PROPERTY OF COMPAL ELECTRONICS, INC. AND CONTAINS CONFIDENTIAL AND TRADE SECRET INFORMATION. THIS SHEET MAY NOT BE TRANSFERRED FROM THE CUSTODY OF THE COMPETENT DIVISION OF R&D DEPARTMENT EXCEPT AS AUTHORIZED BY COMPAL ELECTRONICS, INC. NEITHER THIS SHEET NOR THE INFORMATION IT CONTAINS MAY BE USED BY OR DISCLOSED TO ANY THIRD PARTY WITHOUT PRIOR WRITTEN CONSENT OF COMPAL ELECTRONICS, INC.				Size: Document Number: LA-3481P — Rev: 2.0
				Date: Saturday, June 23, 2007 — Sheet 22 of 47

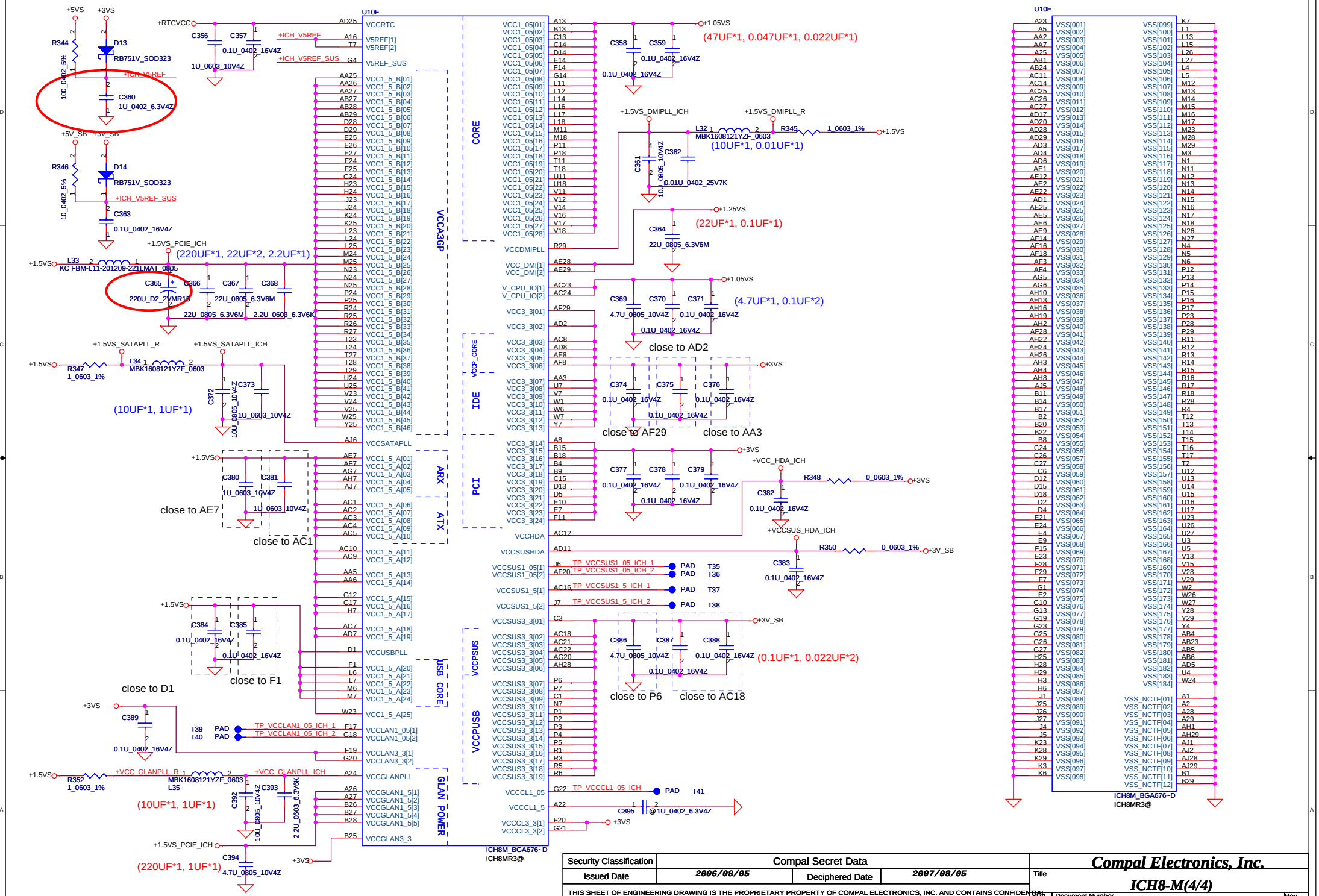

Security Classification	Compal Secret Data		
Issued Date	2006/08/05	Deciphered Date	2007/08/05

THIS SHEET OF ENGINEERING DRAWING IS THE PROPRIETARY PROPERTY OF COMPAL ELECTRONICS, INC. AND CONTAINS CONFIDENTIAL AND TRADE SECRET INFORMATION. THIS SHEET MAY NOT BE TRANSFERED FROM THE CUSTODY OF THE COMPETENT DIVISION OF R&D DEPARTMENT EXCEPT AS AUTHORIZED BY COMPAL ELECTRONICS, INC. NEITHER THIS SHEET NOR THE INFORMATION IT CONTAINS MAY BE USED BY OR DISCLOSED TO ANY THIRD PARTY WITHOUT PRIOR WRITTEN CONSENT OF COMPAL ELECTRONICS, INC.

Compal Electronics, Inc.

Title: **ICH8-M(4/4)**

Size: B | Document Number: **LA-3481P** | Rev: 2.0

Date: Monday, May 28, 2007 | Sheet 23 of 47

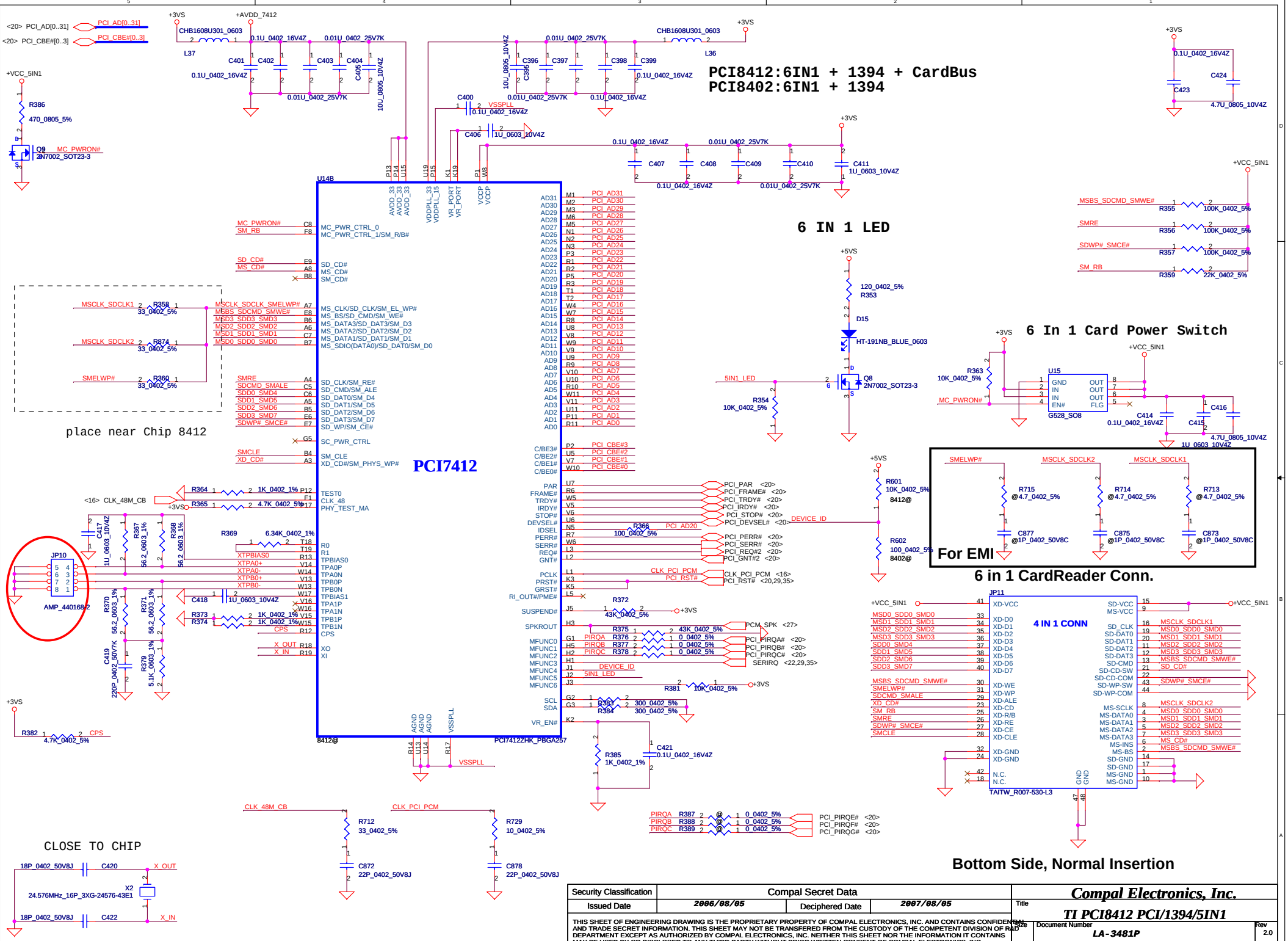

Security Classification	Compal Secret Data		
Issued Date	2006/08/05	Deciphered Date	2007/08/05

THIS SHEET OF ENGINEERING DRAWING IS THE PROPRIETARY PROPERTY OF COMPAL ELECTRONICS, INC. AND CONTAINS CONFIDENTIAL AND TRADE SECRET INFORMATION. THIS SHEET MAY NOT BE TRANSFERED FROM THE CUSTODY OF THE COMPETENT DIVISION OF R&D DEPARTMENT EXCEPT AS AUTHORIZED BY COMPAL ELECTRONICS, INC. NEITHER THIS SHEET NOR THE INFORMATION IT CONTAINS MAY BE USED BY OR DISCLOSED TO ANY THIRD PARTY WITHOUT PRIOR WRITTEN CONSENT OF COMPAL ELECTRONICS, INC.

Compal Electronics, Inc.

Title: TI PCI8412 PCI/1394/5IN1

Size: | Document Number: LA-3481P | Rev: 2.0

Date: Tuesday, May 22, 2007 | Sheet 24 of 47

CardBus Power Switch

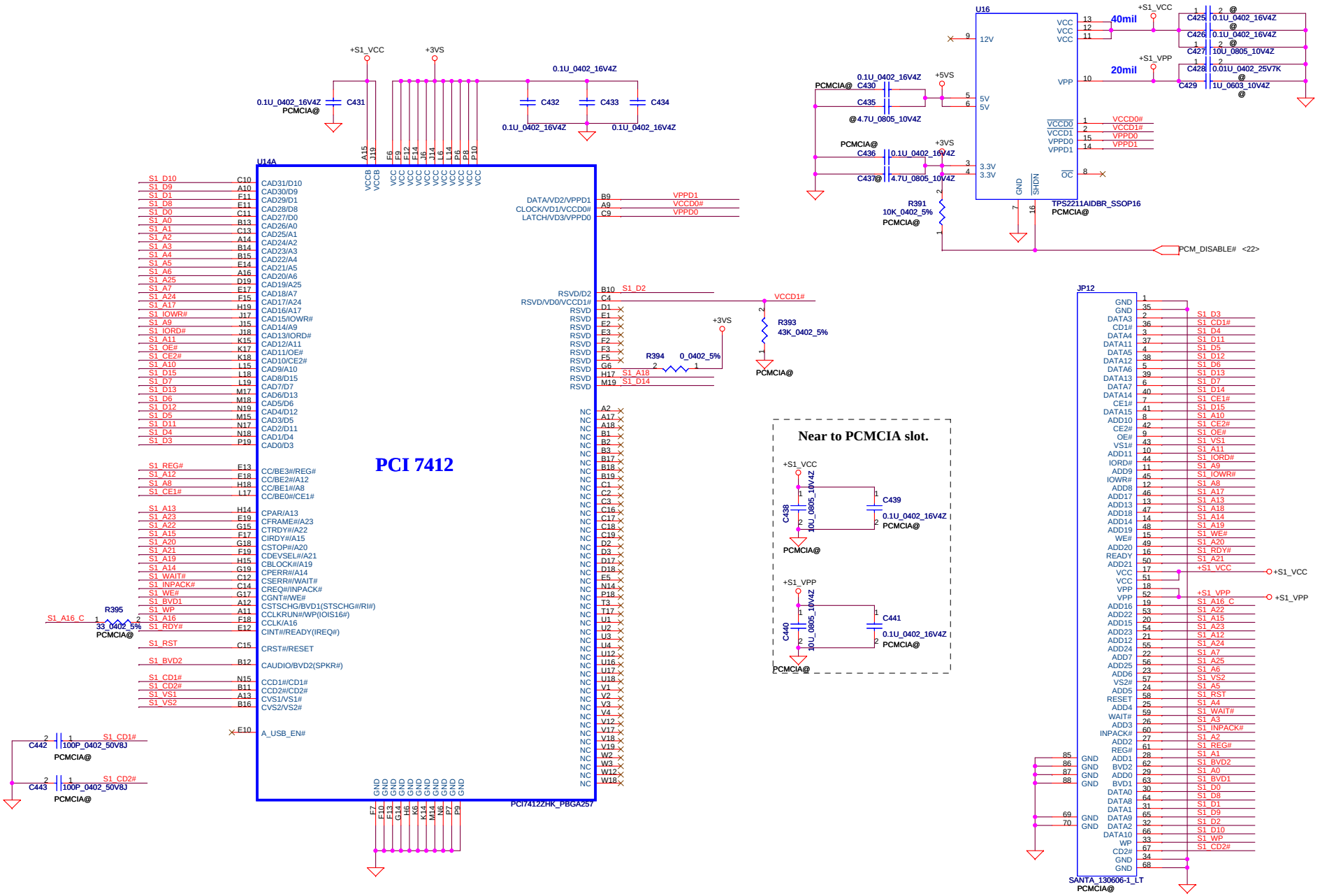

Security Classification	Compal Secret Data		
Issued Date	2006/08/05	Deciphered Date	2007/08/05

THIS SHEET OF ENGINEERING DRAWING IS THE PROPRIETARY PROPERTY OF COMPAL ELECTRONICS, INC. AND CONTAINS CONFIDENTIAL AND TRADE SECRET INFORMATION. THIS SHEET MAY NOT BE TRANSFERED FROM THE CUSTODY OF THE COMPETENT DIVISION OF R&D DEPARTMENT EXCEPT AS AUTHORIZED BY COMPAL ELECTRONICS, INC. NEITHER THIS SHEET NOR THE INFORMATION IT CONTAINS MAY BE USED BY OR DISCLOSED TO ANY THIRD PARTY WITHOUT PRIOR WRITTEN CONSENT OF COMPAL ELECTRONICS, INC.

Compal Electronics, Inc.

Title: **TI PCI8412/CB socket**

Size: | Document Number: **LA-3481P** | Rev: 2.0

Date: Tuesday, May 22, 2007 | Sheet 25 of 47

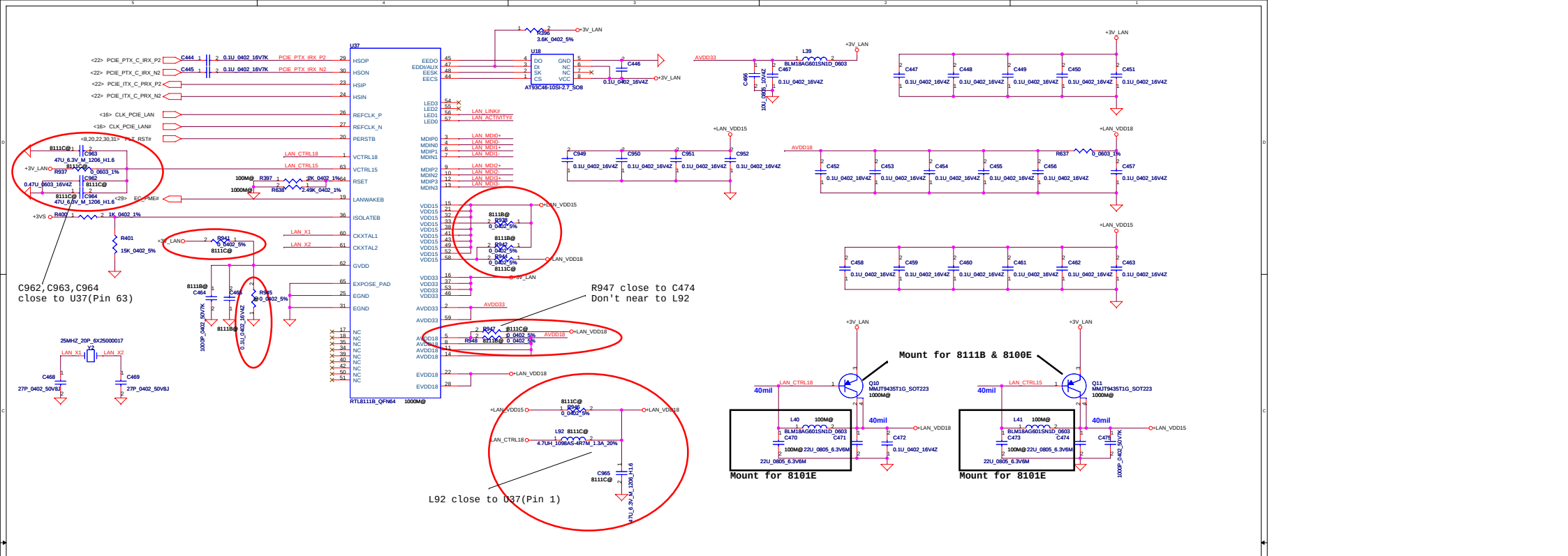

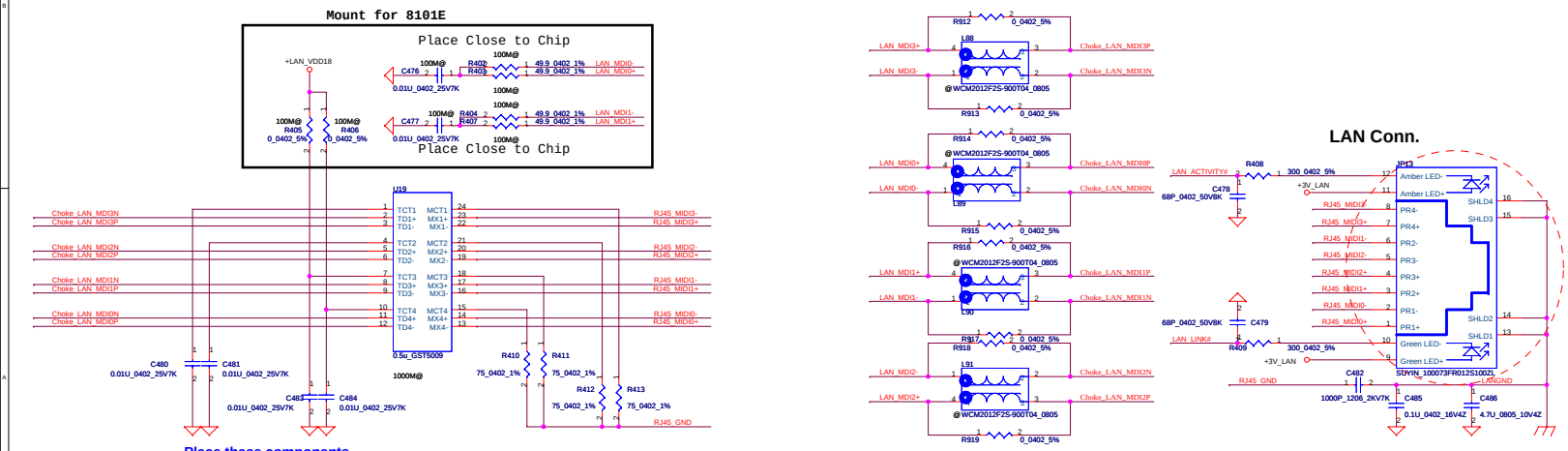

GST5009 for GIGA LAN
TST1284 for 10/100 LAN

Security Classification	Compal Secret Data		
Issued Date	2006/08/05	Deciphered Date	2007/08/05

THIS SHEET OF ENGINEERING DRAWING IS THE PROPRIETARY PROPERTY OF COMPAL ELECTRONICS, INC. AND CONTAINS CONFIDENTIAL AND TRADE SECRET INFORMATION. THIS SHEET MAY NOT BE TRANSFERED FROM THE CUSTODY OF THE COMPETENT DIVISION OF R&D DEPARTMENT EXCEPT AS AUTHORIZED BY COMPAL ELECTRONICS, INC. NEITHER THIS SHEET NOR THE INFORMATION IT CONTAINS MAY BE USED BY OR DISCLOSED TO ANY THIRD PARTY WITHOUT PRIOR WRITTEN CONSENT OF COMPAL ELECTRONICS, INC.

Compal Electronics, Inc.

Title: **RTL8111B/8101E 10/100/1000 LAN**

Size: | Document Number: **LA-3481P** | Rev: 2.0

Date: Tuesday, May 22, 2007 | Sheet 26 of 47

HD Audio Codec

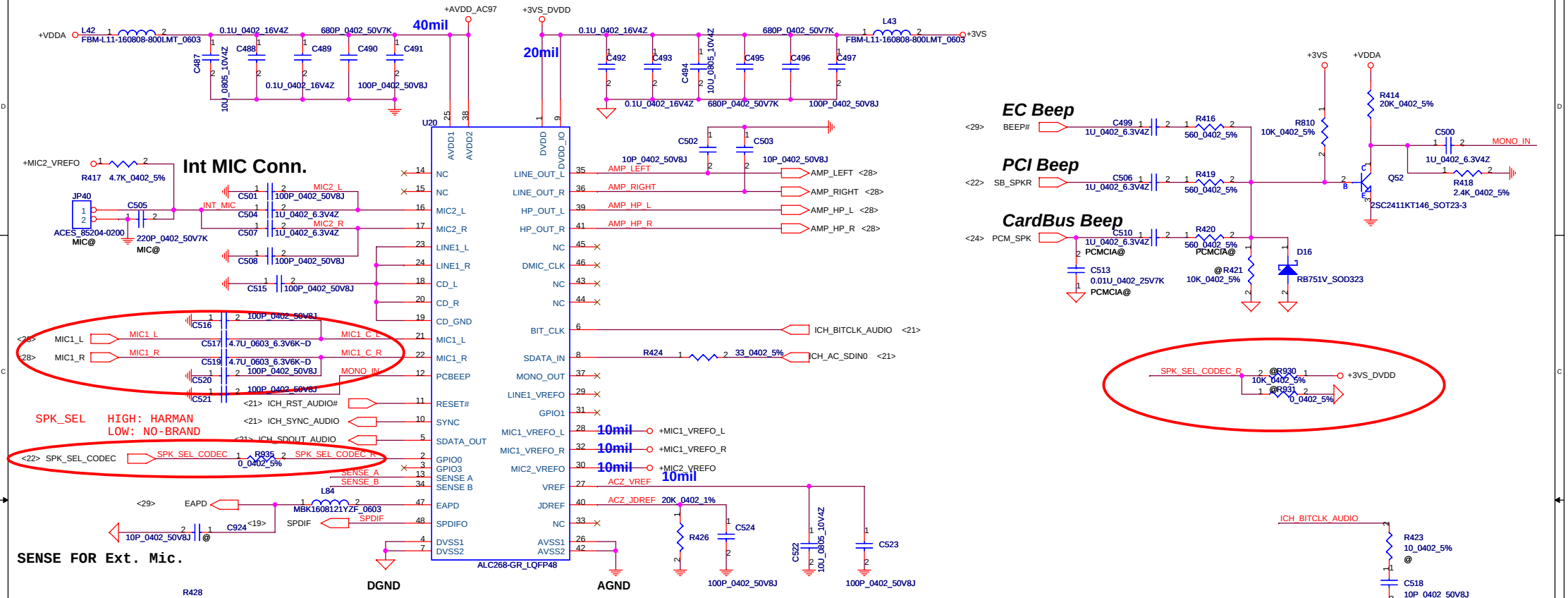

SENSE FOR Ext. Mic.

SENSE FOR Int. Mic.

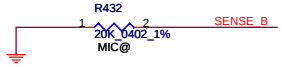

SENSE FOR HP

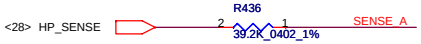

Sense Pin	Impedance	Codec Signals
SENSE A	39.2K	PORT-A (PIN 39, 41)
	20K	PORT-B (PIN 21, 22)
	10K	PORT-C (PIN 23, 24)
	5.1K	PORT-D (PIN 35, 36)
SENSE B	39.2K	PORT-E (PIN 14, 15)
	20K	PORT-F (PIN 16, 17)
	10K	PORT-G (PIN 43, 44)
	5.1K	PORT-H (PIN 45, 46)

Regulator for CODEC

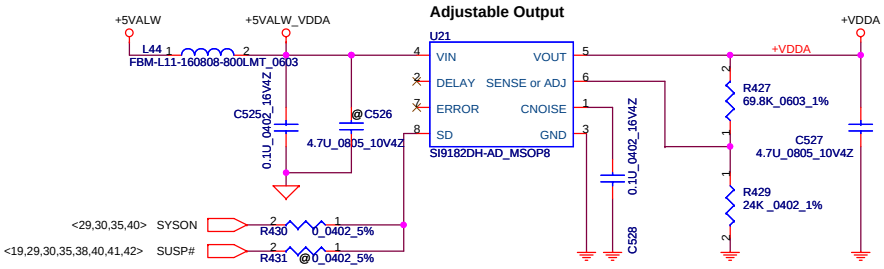

Moat Bridge

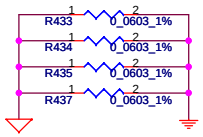

Security Classification	Compal Secret Data		
Issued Date	2006/08/05	Deciphered Date	2007/08/05

THIS SHEET OF ENGINEERING DRAWING IS THE PROPRIETARY PROPERTY OF COMPAL ELECTRONICS, INC. AND CONTAINS CONFIDENTIAL AND TRADE SECRET INFORMATION. THIS SHEET MAY NOT BE TRANSFERED FROM THE CUSTODY OF THE COMPETENT DIVISION OF R&D DEPARTMENT EXCEPT AS AUTHORIZED BY COMPAL ELECTRONICS, INC. NEITHER THIS SHEET NOR THE INFORMATION IT CONTAINS MAY BE USED BY OR DISCLOSED TO ANY THIRD PARTY WITHOUT PRIOR WRITTEN CONSENT OF COMPAL ELECTRONICS, INC.

Compal Electronics, Inc.

Title: **HD Audio Codec_ALC268**

Size | Document Number: LA-3481P | Rev: 2.0

Date: Tuesday, May 22, 2007 | Sheet 27 of 47

APA2056 SPK/HP Amplifier

```
+5VS for SA00001G200
+3VS for SA00001G210
```

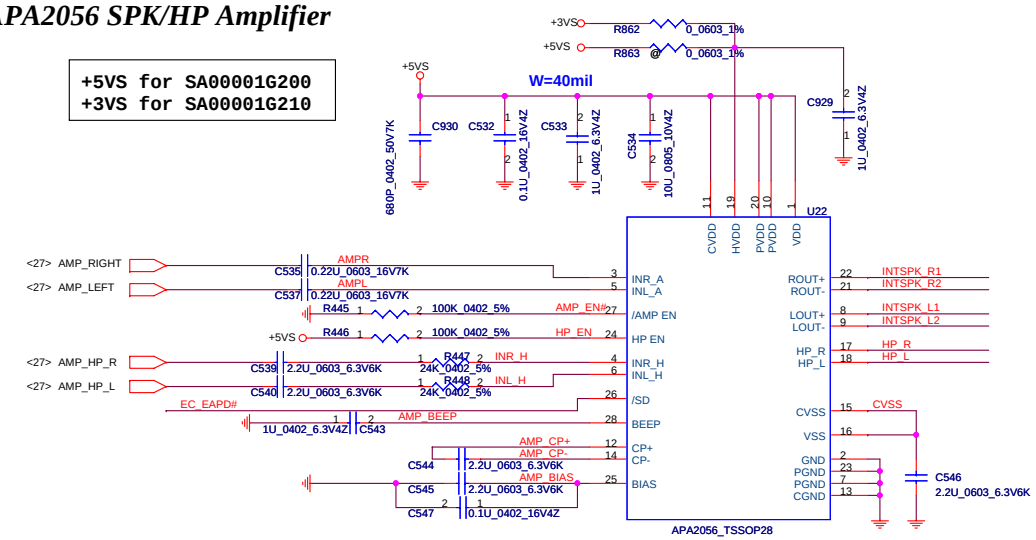

IN_A Gain = 10dB (Internal Speaker)
IN_H Gain = 0dB (Headphone)

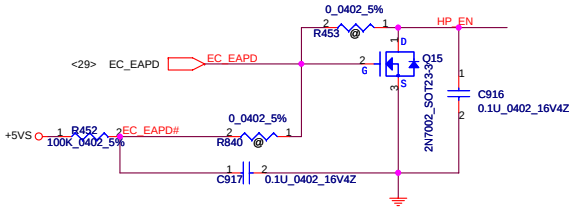

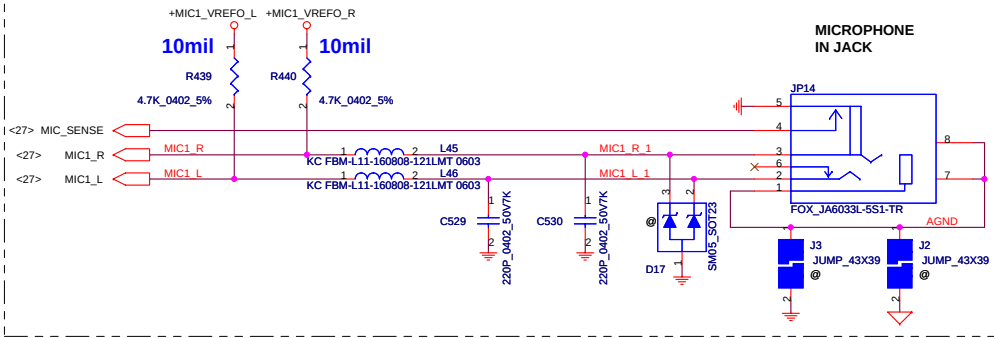

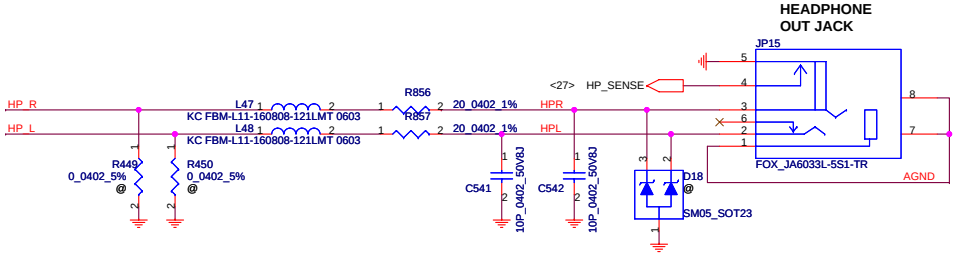

Right Speaker Connector

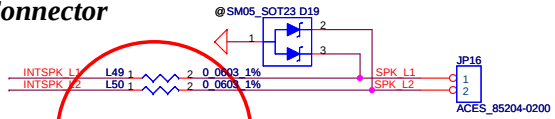

Left Speaker Connector

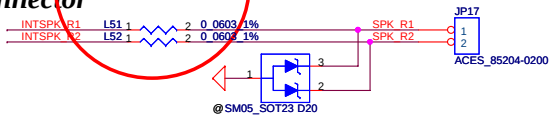

Volume Control

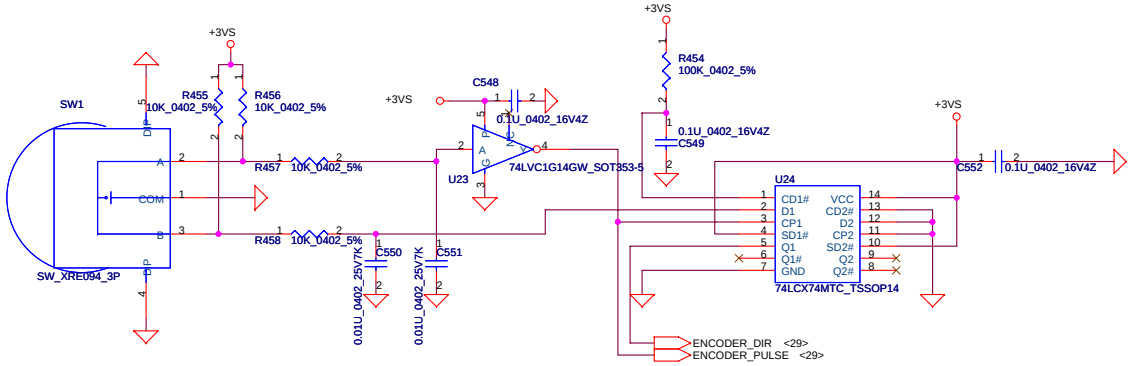

Security Classification	Compal Secret Data		
Issued Date	2006/08/05	Deciphered Date	2007/08/05

THIS SHEET OF ENGINEERING DRAWING IS THE PROPRIETARY PROPERTY OF COMPAL ELECTRONICS, INC. AND CONTAINS CONFIDENTIAL AND TRADE SECRET INFORMATION. THIS SHEET MAY NOT BE TRANSFERED FROM THE CUSTODY OF THE COMPETENT DIVISION OF R&D DEPARTMENT EXCEPT AS AUTHORIZED BY COMPAL ELECTRONICS, INC. NEITHER THIS SHEET NOR THE INFORMATION IT CONTAINS MAY BE USED BY OR DISCLOSED TO ANY THIRD PARTY WITHOUT PRIOR WRITTEN CONSENT OF COMPAL ELECTRONICS, INC.

Compal Electronics, Inc.

Title: **AMP/VR/Audio Jack**

Size: | Document Number: **LA-3481P** | Rev: 2.0

Date: Saturday, June 02, 2007 | Sheet 28 of 47

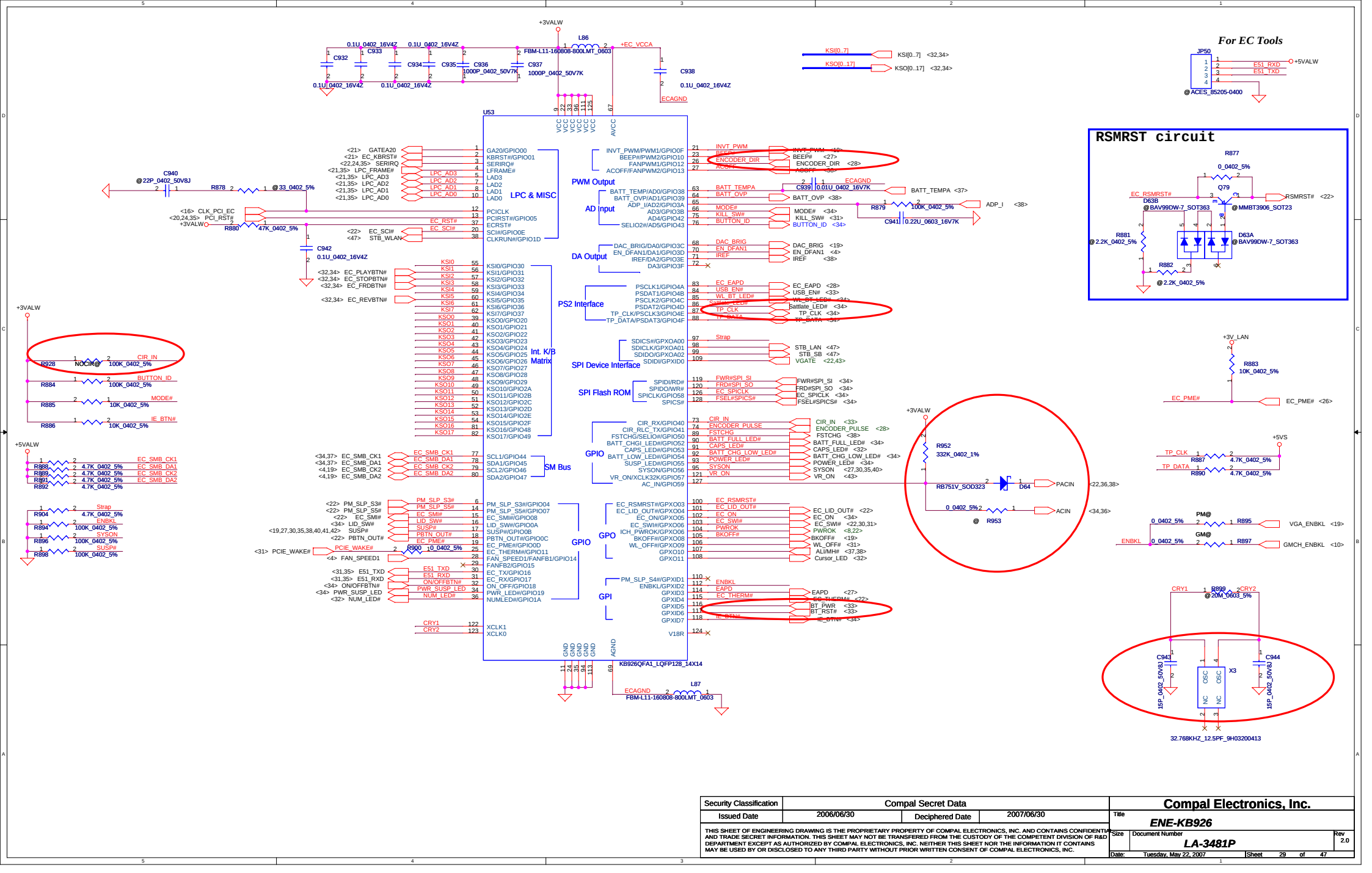

Security Classification	Compal Secret Data		
Issued Date	2006/06/30	Deciphered Date	2007/06/30

THIS SHEET OF ENGINEERING DRAWING IS THE PROPRIETARY PROPERTY OF COMPAL ELECTRONICS, INC. AND CONTAINS CONFIDENTIAL AND TRADE SECRET INFORMATION. THIS SHEET MAY NOT BE TRANSFERED FROM THE CUSTODY OF THE COMPETENT DIVISION OF R&D DEPARTMENT EXCEPT AS AUTHORIZED BY COMPAL ELECTRONICS, INC. NEITHER THIS SHEET NOR THE INFORMATION IT CONTAINS MAY BE USED BY OR DISCLOSED TO ANY THIRD PARTY WITHOUT PRIOR WRITTEN CONSENT OF COMPAL ELECTRONICS, INC.

Compal Electronics, Inc.

Title: *ENE-KB926*

Size: | Document Number: *LA-3481P* | Rev: 2.0

Date: Tuesday, May 22, 2007 | Sheet 29 of 47

New Card

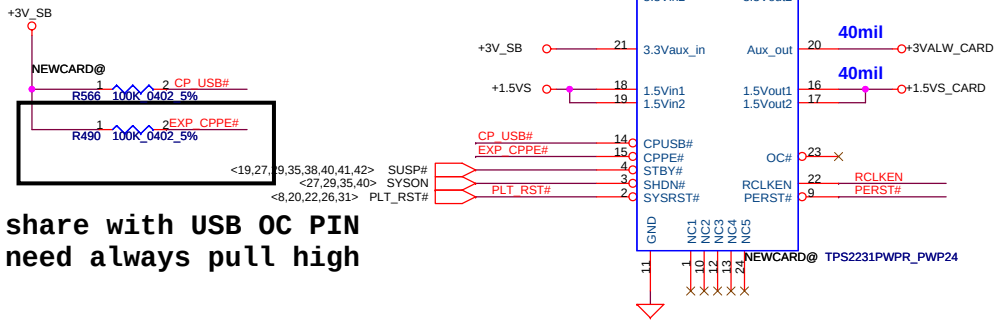

share with USB OC PIN
need always pull high

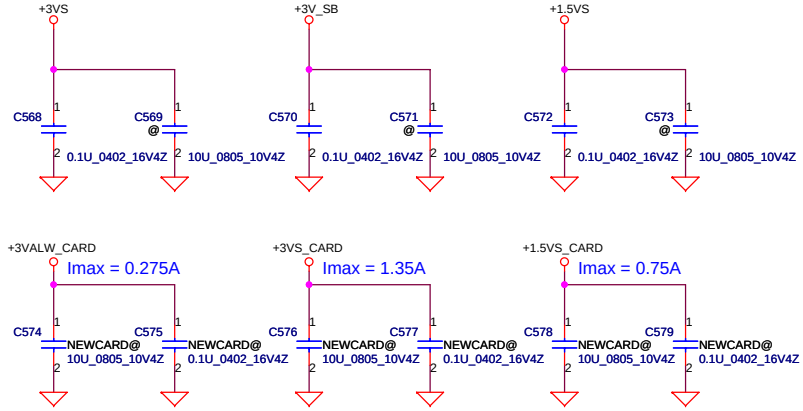

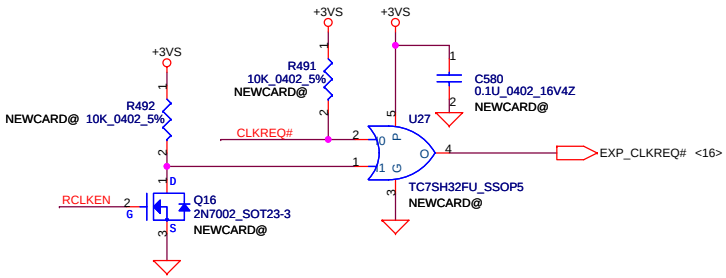

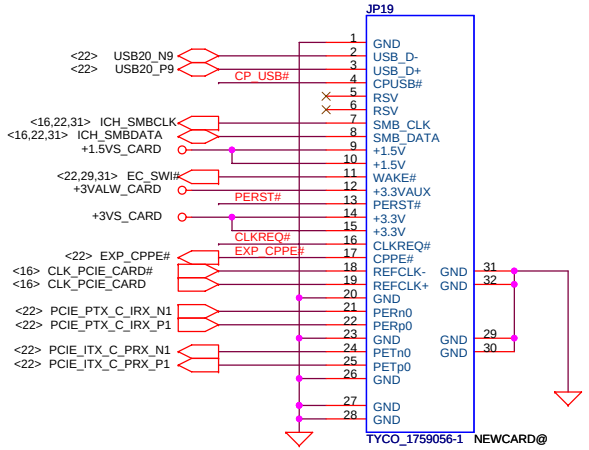

MDC

MDC Conn.

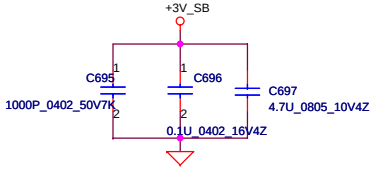

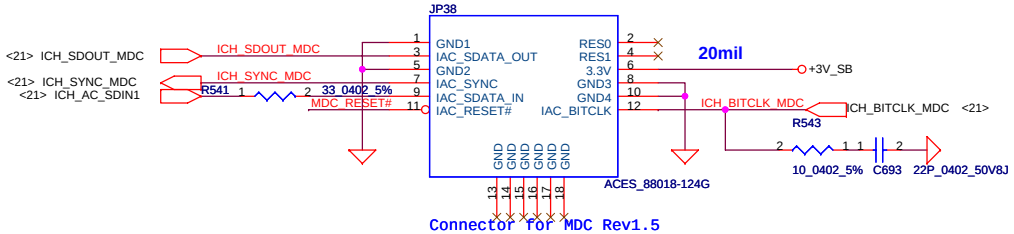

Connector for MDC Rev1.5

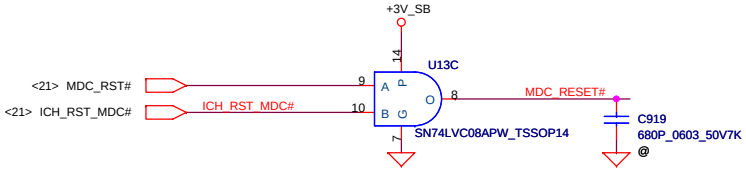

Security Classification	Compal Secret Data		
Issued Date	2006/08/05	Deciphered Date	2007/08/05

THIS SHEET OF ENGINEERING DRAWING IS THE PROPRIETARY PROPERTY OF COMPAL ELECTRONICS, INC. AND CONTAINS CONFIDENTIAL AND TRADE SECRET INFORMATION. THIS SHEET MAY NOT BE TRANSFERED FROM THE CUSTODY OF THE COMPETENT DIVISION OF R&D DEPARTMENT EXCEPT AS AUTHORIZED BY COMPAL ELECTRONICS, INC. NEITHER THIS SHEET NOR THE INFORMATION IT CONTAINS MAY BE USED BY OR DISCLOSED TO ANY THIRD PARTY WITHOUT PRIOR WRITTEN CONSENT OF COMPAL ELECTRONICS, INC.

Compal Electronics, Inc.

Title: **New Card & MDC**

Size: | Document Number: LA-3481P | Rev: 2.0

Date: Tuesday, May 22, 2007 | Sheet 30 of 47

NAND mini Card(Robson support)

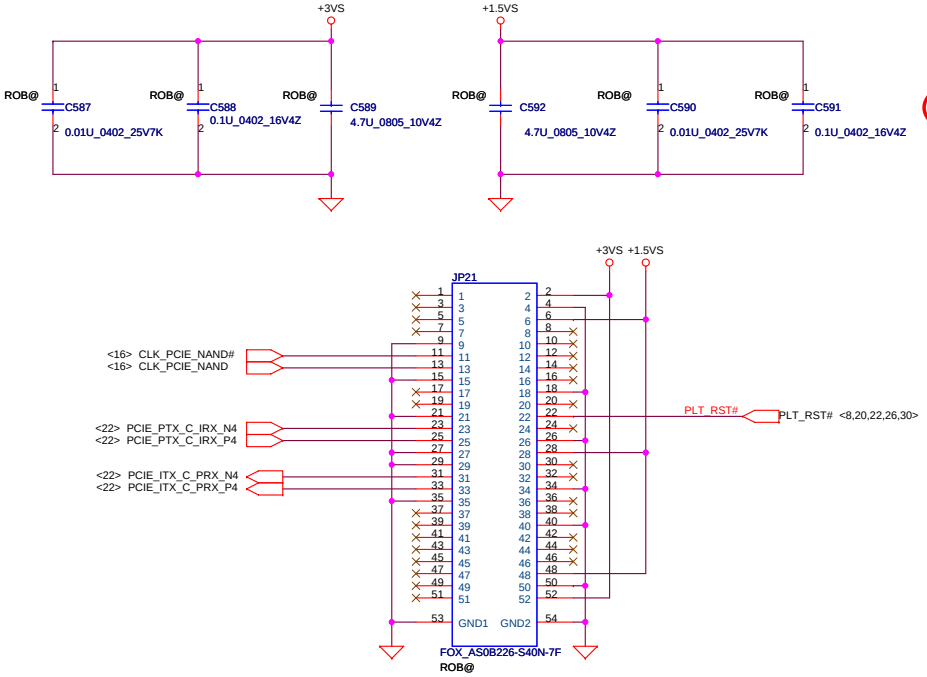

Mini-Express Card for 3G

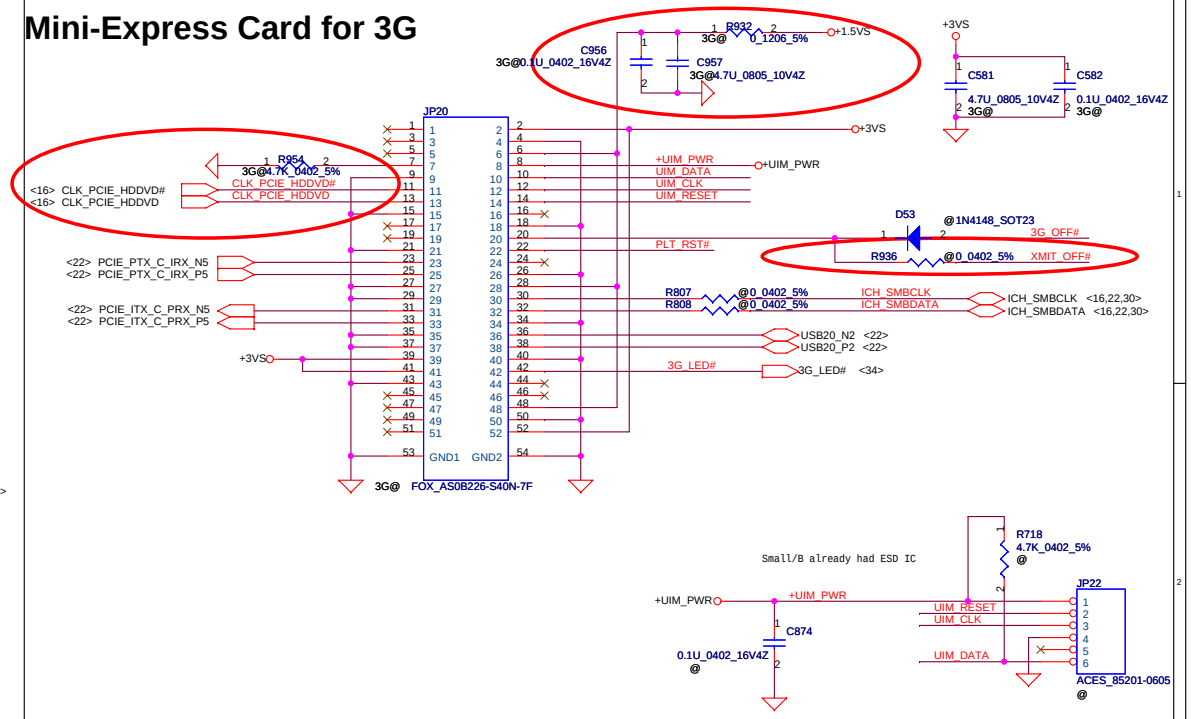

Mini-Express Card for WLAN

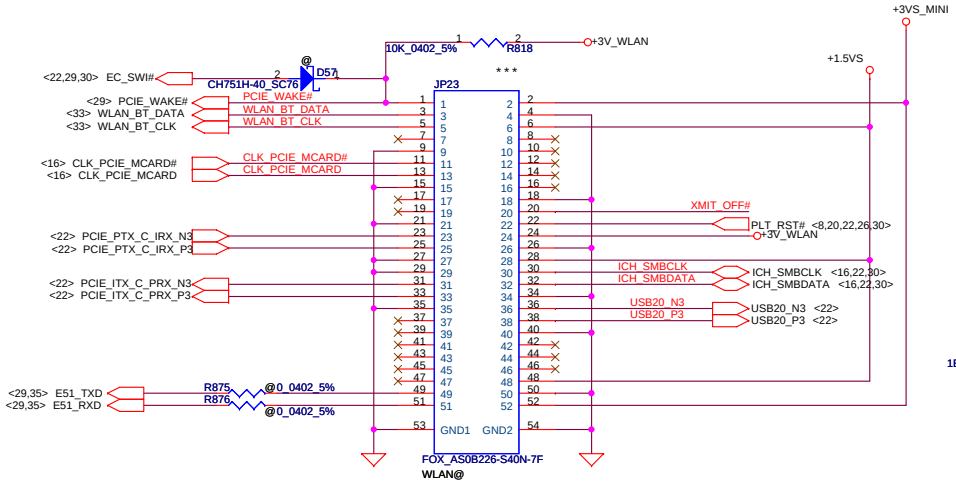

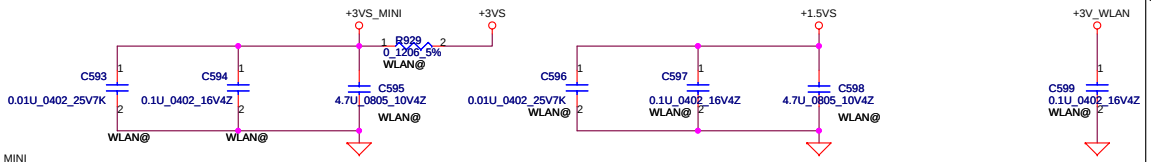

Kill SWITCH

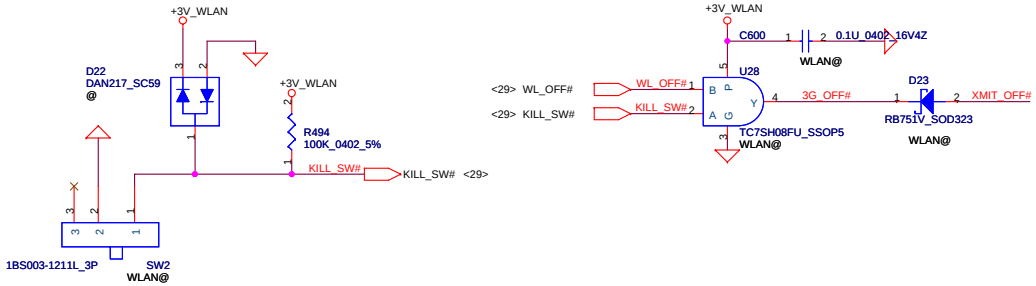

Security Classification	Compal Secret Data		
Issued Date	2006/08/05	Deciphered Date	2007/08/05

THIS SHEET OF ENGINEERING DRAWING IS THE PROPRIETARY PROPERTY OF COMPAL ELECTRONICS, INC. AND CONTAINS CONFIDENTIAL AND TRADE SECRET INFORMATION. THIS SHEET MAY NOT BE TRANSFERED FROM THE CUSTODY OF THE COMPETENT DIVISION OF R&D DEPARTMENT EXCEPT AS AUTHORIZED BY COMPAL ELECTRONICS, INC. NEITHER THIS SHEET NOR THE INFORMATION IT CONTAINS MAY BE USED BY OR DISCLOSED TO ANY THIRD PARTY WITHOUT PRIOR WRITTEN CONSENT OF COMPAL ELECTRONICS, INC.

Compal Electronics, Inc.

Title: PCI-E Mini Card I/F

Size | Document Number: LA-3481P | Rev: 2.0

Date: Tuesday, May 22, 2007 | Sheet 31 of 47

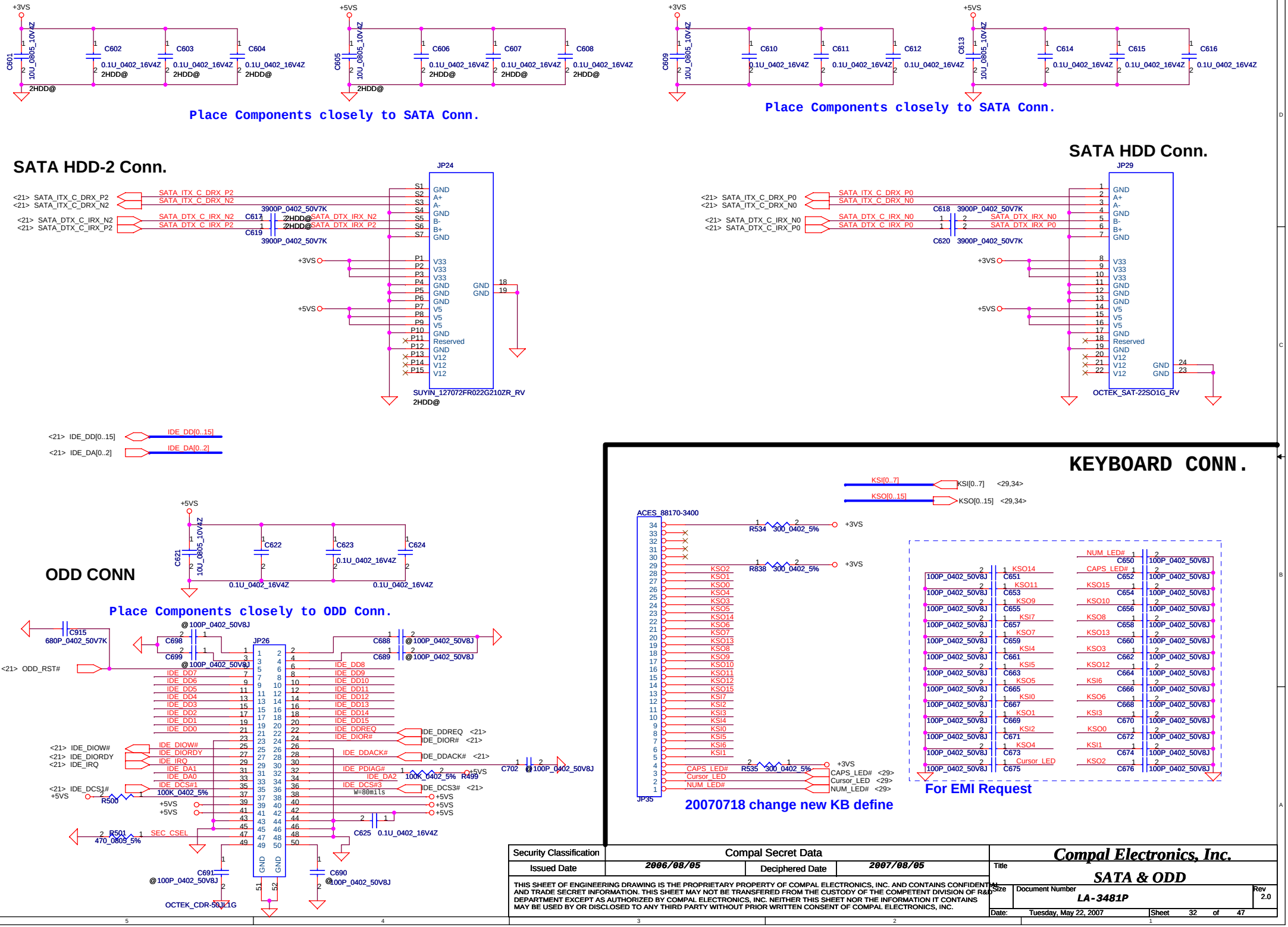

Security Classification	Compal Secret Data		
Issued Date	2006/08/05	Deciphered Date	2007/08/05

THIS SHEET OF ENGINEERING DRAWING IS THE PROPRIETARY PROPERTY OF COMPAL ELECTRONICS, INC. AND CONTAINS CONFIDENTIAL AND TRADE SECRET INFORMATION. THIS SHEET MAY NOT BE TRANSFERED FROM THE CUSTODY OF THE COMPETENT DIVISION OF R&D DEPARTMENT EXCEPT AS AUTHORIZED BY COMPAL ELECTRONICS, INC. NEITHER THIS SHEET NOR THE INFORMATION IT CONTAINS MAY BE USED BY OR DISCLOSED TO ANY THIRD PARTY WITHOUT PRIOR WRITTEN CONSENT OF COMPAL ELECTRONICS, INC.

Compal Electronics, Inc.

Title: **SATA & ODD**

Size | Document Number: **LA-3481P** | Rev: 2.0

Date: Tuesday, May 22, 2007 | Sheet 32 of 47

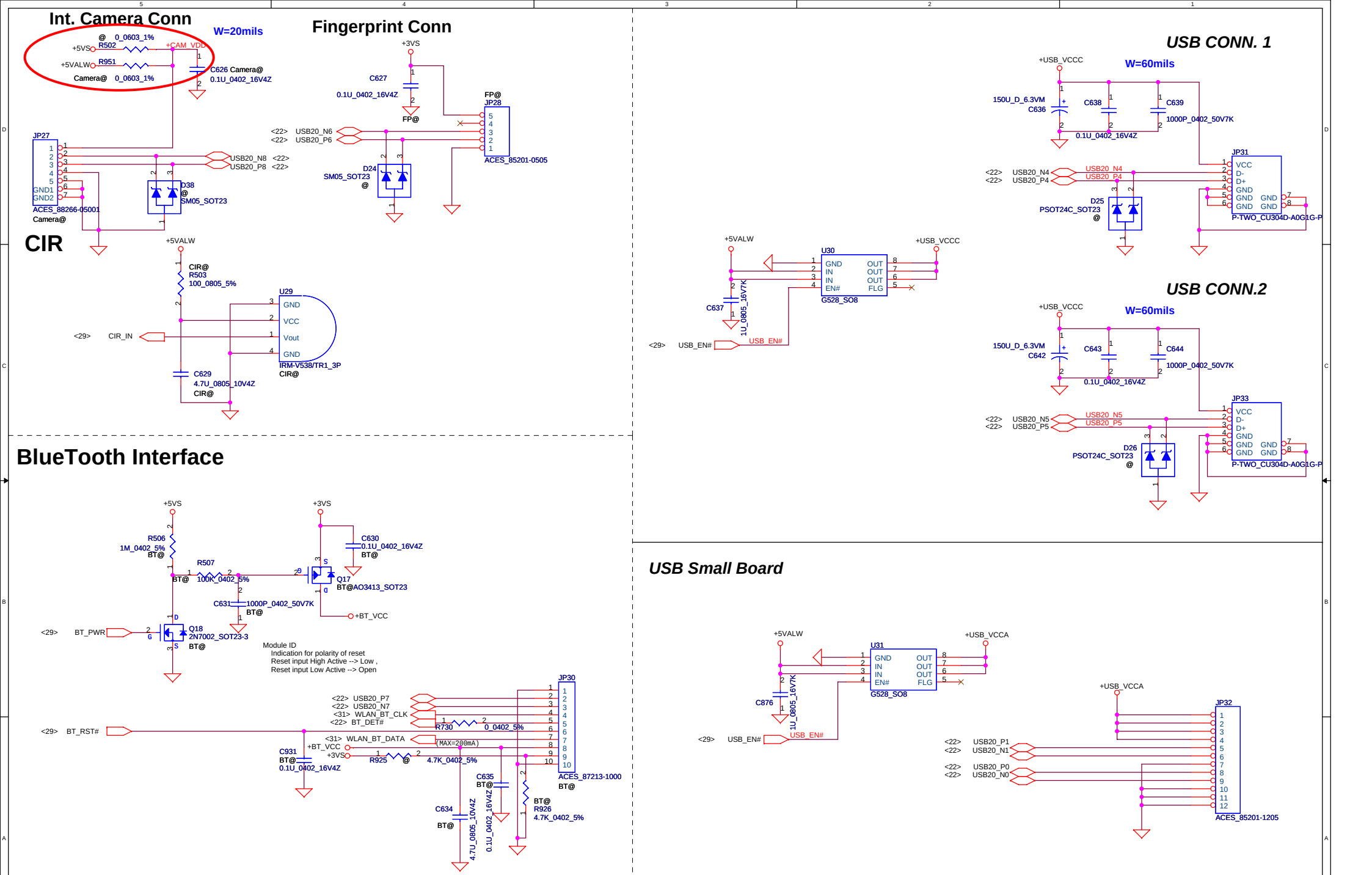

Security Classification	Compal Secret Data			Compal Electronics, Inc.
Issued Date	2006/08/05	Deciphered Date	2007/08/05	Title: USB Conn./BT/Camera/CIR
				Size / Document Number: LA-3481P / Rev: 2.0
				Date: Tuesday, May 22, 2007 / Sheet 33 of 47

THIS SHEET OF ENGINEERING DRAWING IS THE PROPRIETARY PROPERTY OF COMPAL ELECTRONICS, INC. AND CONTAINS CONFIDENTIAL AND TRADE SECRET INFORMATION. THIS SHEET MAY NOT BE TRANSFERED FROM THE CUSTODY OF THE COMPETENT DIVISION OF R&D DEPARTMENT EXCEPT AS AUTHORIZED BY COMPAL ELECTRONICS, INC. NEITHER THIS SHEET NOR THE INFORMATION IT CONTAINS MAY BE USED BY OR DISCLOSED TO ANY THIRD PARTY WITHOUT PRIOR WRITTEN CONSENT OF COMPAL ELECTRONICS, INC.

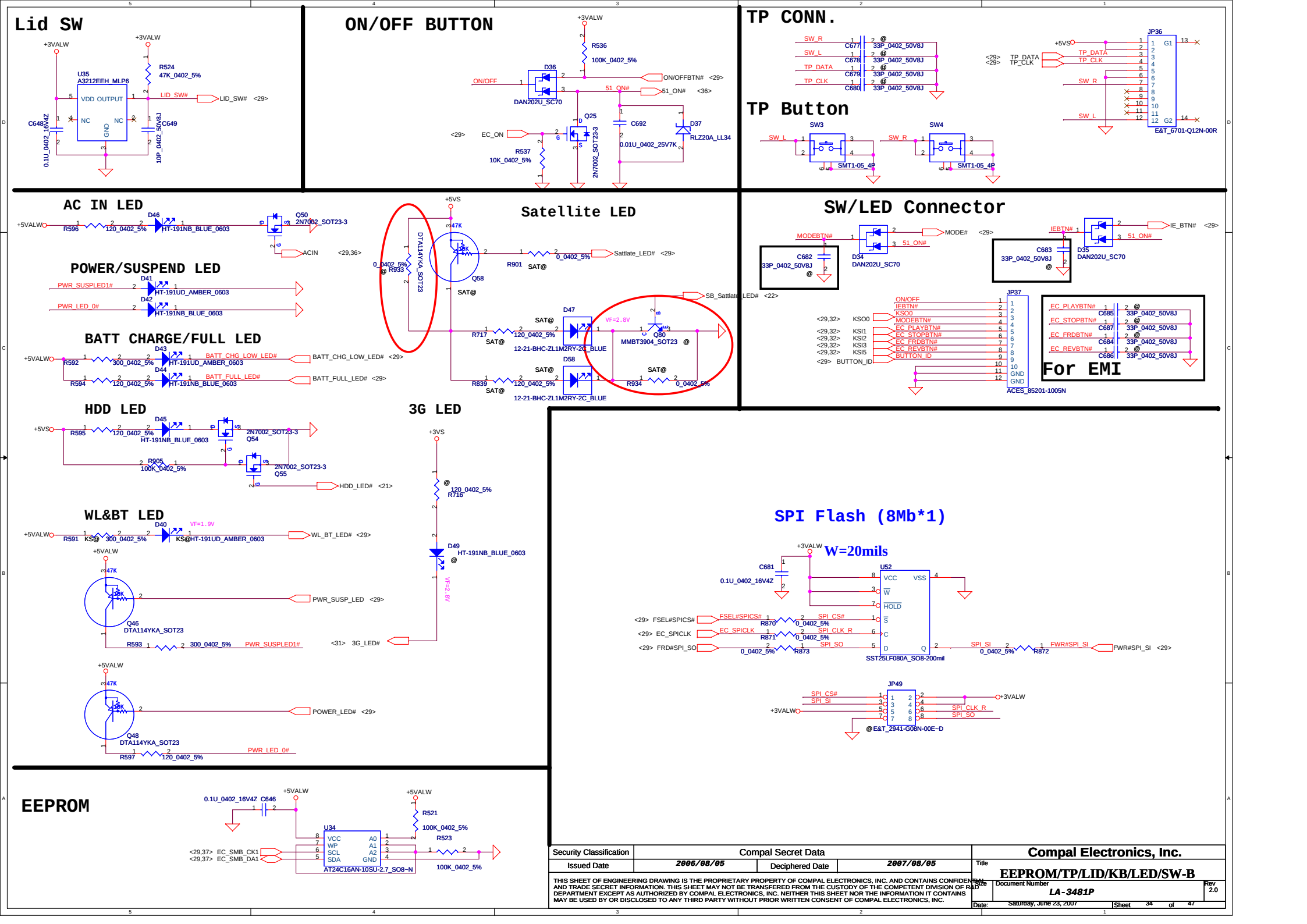

Security Classification	Compal Secret Data		Compal Electronics, Inc.
Issued Date	2006/08/05	Deciphered Date 2007/08/05	Title EEPROM/TP/LID/KB/LED/SW-B
			Size / Document Number LA-3481P / Rev 2.0
			Date: Saturday, June 23, 2007 / Sheet 34 of 47

THIS SHEET OF ENGINEERING DRAWING IS THE PROPRIETARY PROPERTY OF COMPAL ELECTRONICS, INC. AND CONTAINS CONFIDENTIAL AND TRADE SECRET INFORMATION. THIS SHEET MAY NOT BE TRANSFERRED FROM THE CUSTODY OF THE COMPETENT DIVISION OF R&D DEPARTMENT EXCEPT AS AUTHORIZED BY COMPAL ELECTRONICS, INC. NEITHER THIS SHEET NOR THE INFORMATION IT CONTAINS MAY BE USED BY OR DISCLOSED TO ANY THIRD PARTY WITHOUT PRIOR WRITTEN CONSENT OF COMPAL ELECTRONICS, INC.

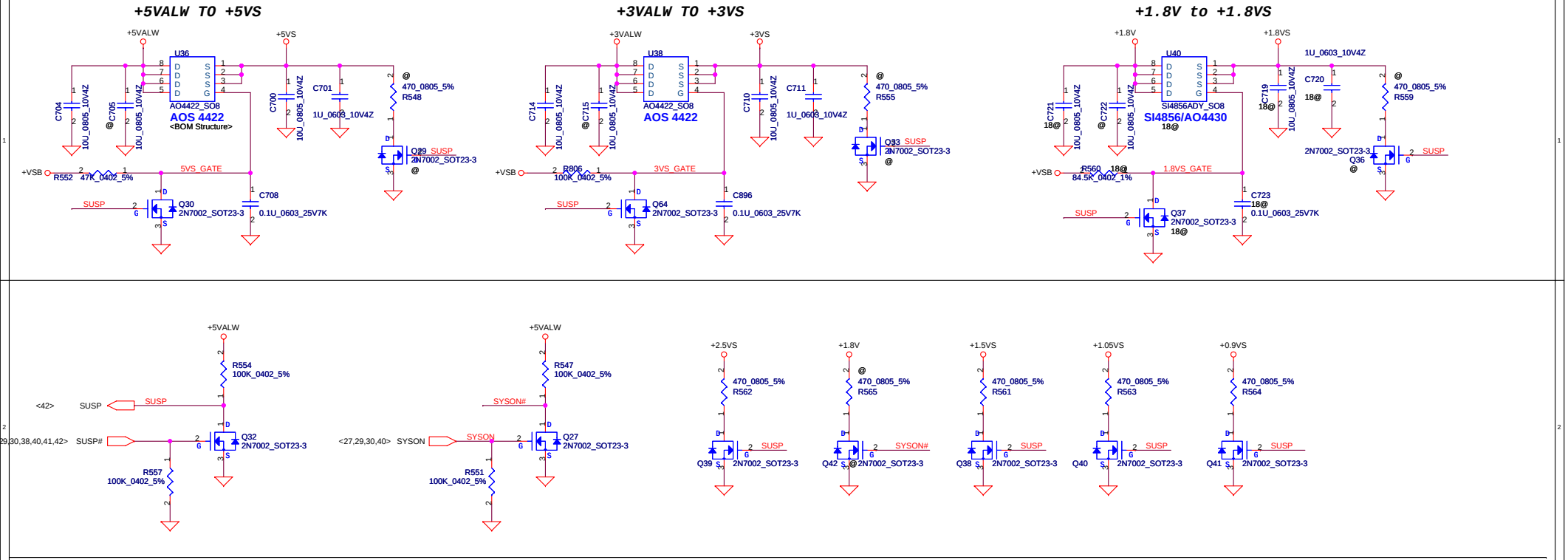

Debug Port

New LPC Debug Pad ---- MB side For EE

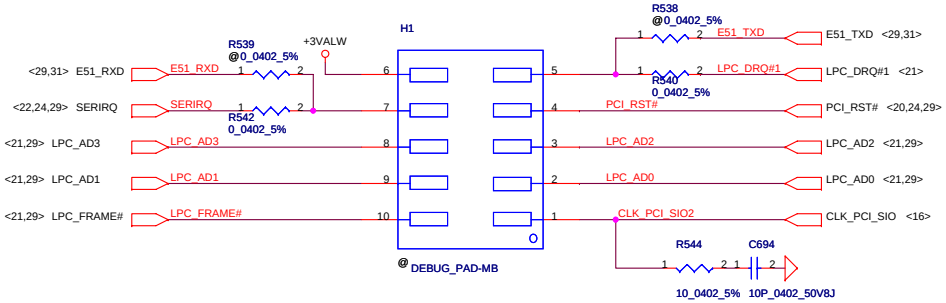

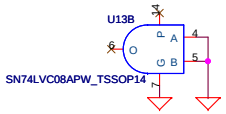

Under DDR ME Assigment Area

Keep Resistor near Debug Pad and in the same side
Reverse Side DIMM ---- Pin 1 keep away DIMM

Security Classification	Compal Secret Data		
Issued Date	2006/08/05	Deciphered Date	2007/08/05

THIS SHEET OF ENGINEERING DRAWING IS THE PROPRIETARY PROPERTY OF COMPAL ELECTRONICS, INC. AND CONTAINS CONFIDENTIAL AND TRADE SECRET INFORMATION. THIS SHEET MAY NOT BE TRANSFERED FROM THE CUSTODY OF THE COMPETENT DIVISION OF R&D DEPARTMENT EXCEPT AS AUTHORIZED BY COMPAL ELECTRONICS, INC. NEITHER THIS SHEET NOR THE INFORMATION IT CONTAINS MAY BE USED BY OR DISCLOSED TO ANY THIRD PARTY WITHOUT PRIOR WRITTEN CONSENT OF COMPAL ELECTRONICS, INC.

Compal Electronics, Inc.

Title: **DC/DC I/F & Debug Pad**

Size | Document Number: **LA-3481P** | Rev: 2.0

Date: Tuesday, May 22, 2007 | Sheet 35 of 47

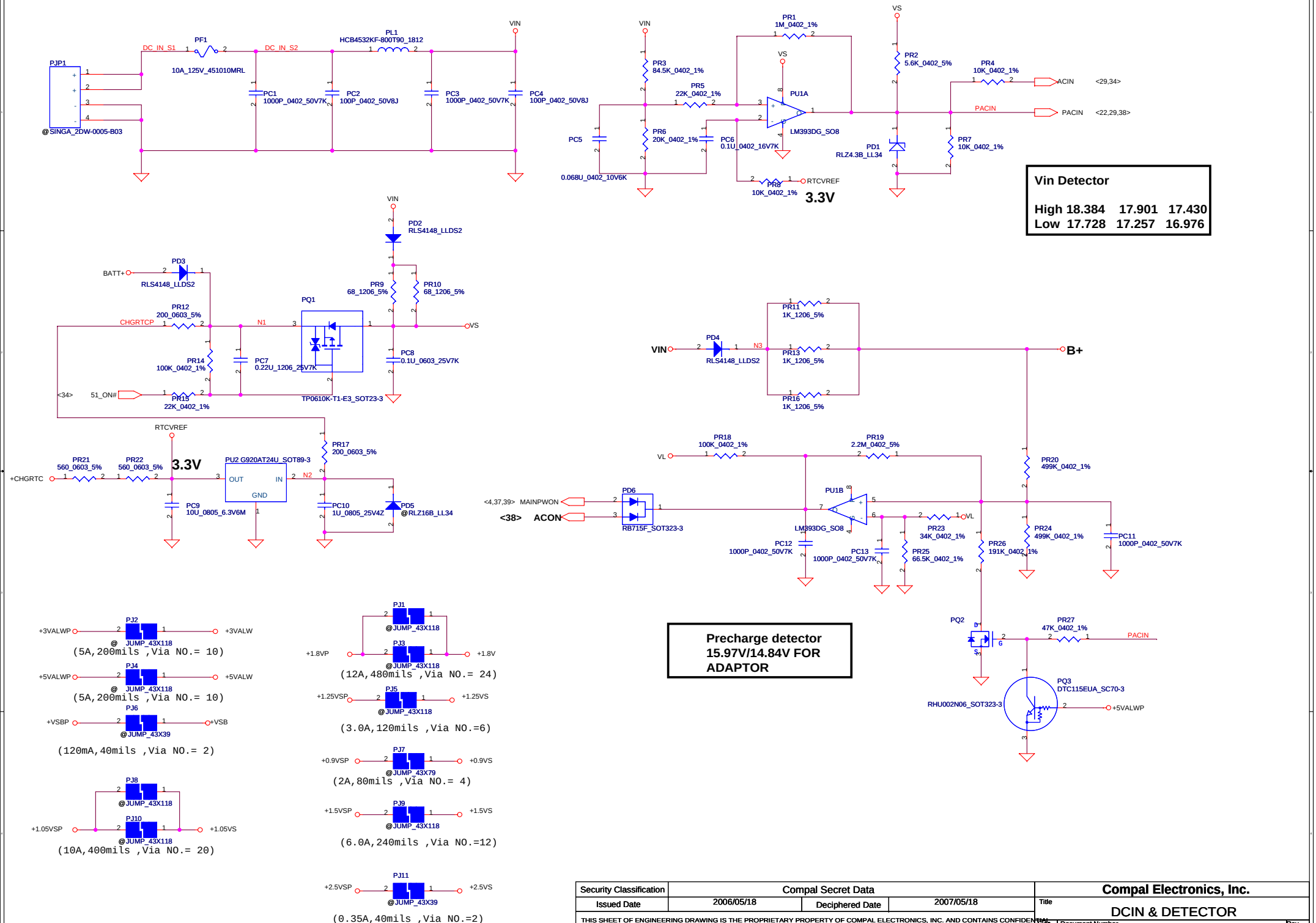

Security Classification	Compal Secret Data		
Issued Date	2006/05/18	Deciphered Date	2007/05/18

THIS SHEET OF ENGINEERING DRAWING IS THE PROPRIETARY PROPERTY OF COMPAL ELECTRONICS, INC. AND CONTAINS CONFIDENTIAL AND TRADE SECRET INFORMATION. THIS SHEET MAY NOT BE TRANSFERED FROM THE CUSTODY OF THE COMPETENT DIVISION OF R&D DEPARTMENT EXCEPT AS AUTHORIZED BY COMPAL ELECTRONICS, INC. NEITHER THIS SHEET NOR THE INFORMATION IT CONTAINS MAY BE USED BY OR DISCLOSED TO ANY THIRD PARTY WITHOUT PRIOR WRITTEN CONSENT OF COMPAL ELECTRONICS, INC.

Compal Electronics, Inc.

Title: DCIN & DETECTOR

Size | Document Number | Rev 2.0

Date: Tuesday, May 22, 2007 | Sheet 36 of 47

PH1 under CPU botten side :
CPU thermal protection at 92 degree C
Recovery at 56 degree C

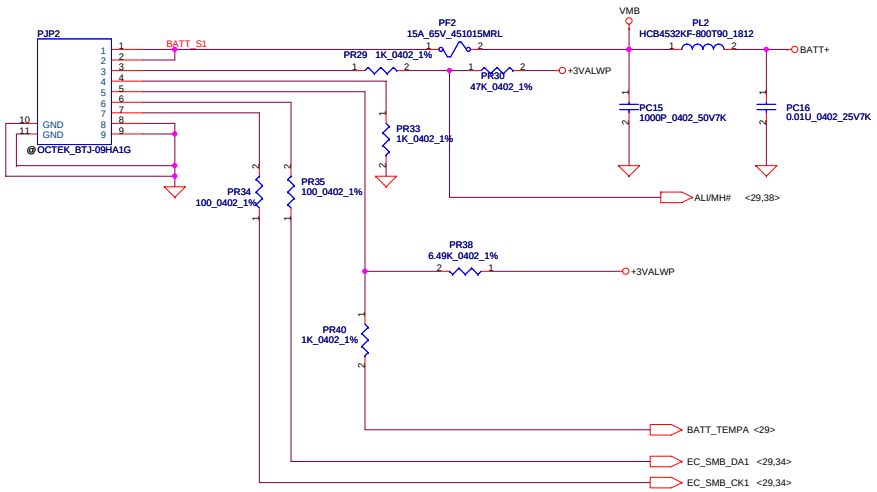

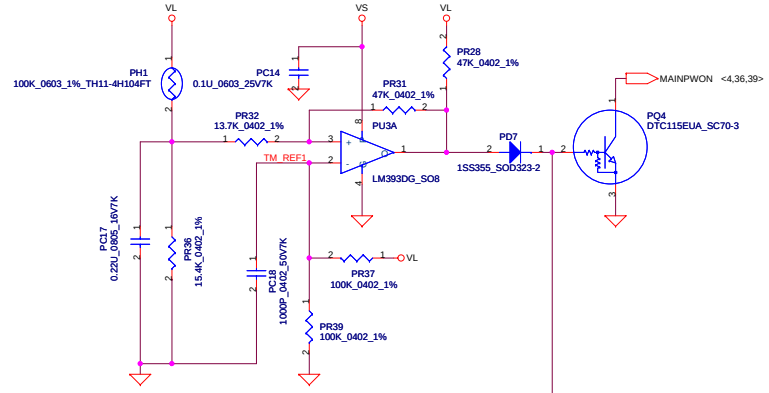

PH2 near main Battery CONN :
BAT. thermal protection at 92 degree C
Recovery at 47 degree C

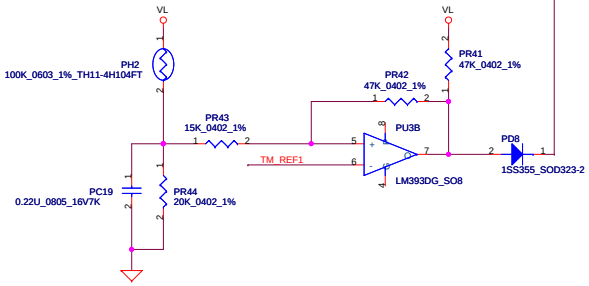

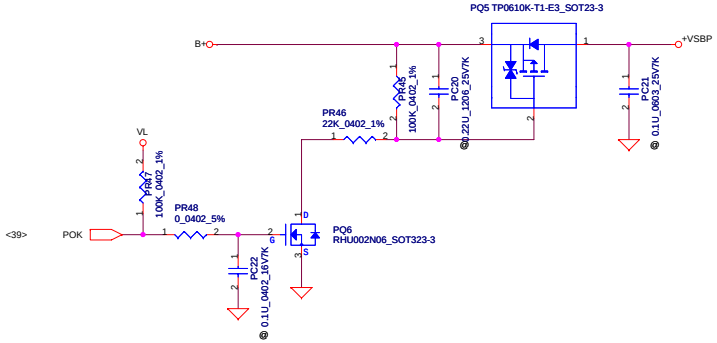

Security Classification	Compal Secret Data			Compal Electronics, Inc.
Issued Date	2006/05/18	Deciphered Date	2007/05/18	Title: BATTERY CONN / OTP

THIS SHEET OF ENGINEERING DRAWING IS THE PROPRIETARY PROPERTY OF COMPAL ELECTRONICS, INC. AND CONTAINS CONFIDENTIAL AND TRADE SECRET INFORMATION. THIS SHEET MAY NOT BE TRANSFERED FROM THE CUSTODY OF THE COMPETENT DIVISION OF R&D DEPARTMENT EXCEPT AS AUTHORIZED BY COMPAL ELECTRONICS, INC. NEITHER THIS SHEET NOR THE INFORMATION IT CONTAINS MAY BE USED BY OR DISCLOSED TO ANY THIRD PARTY WITHOUT PRIOR WRITTEN CONSENT OF COMPAL ELECTRONICS, INC.

Size	Document Number	Rev
		2.0

Date: Tuesday, May 22, 2007 Sheet 37 of 47

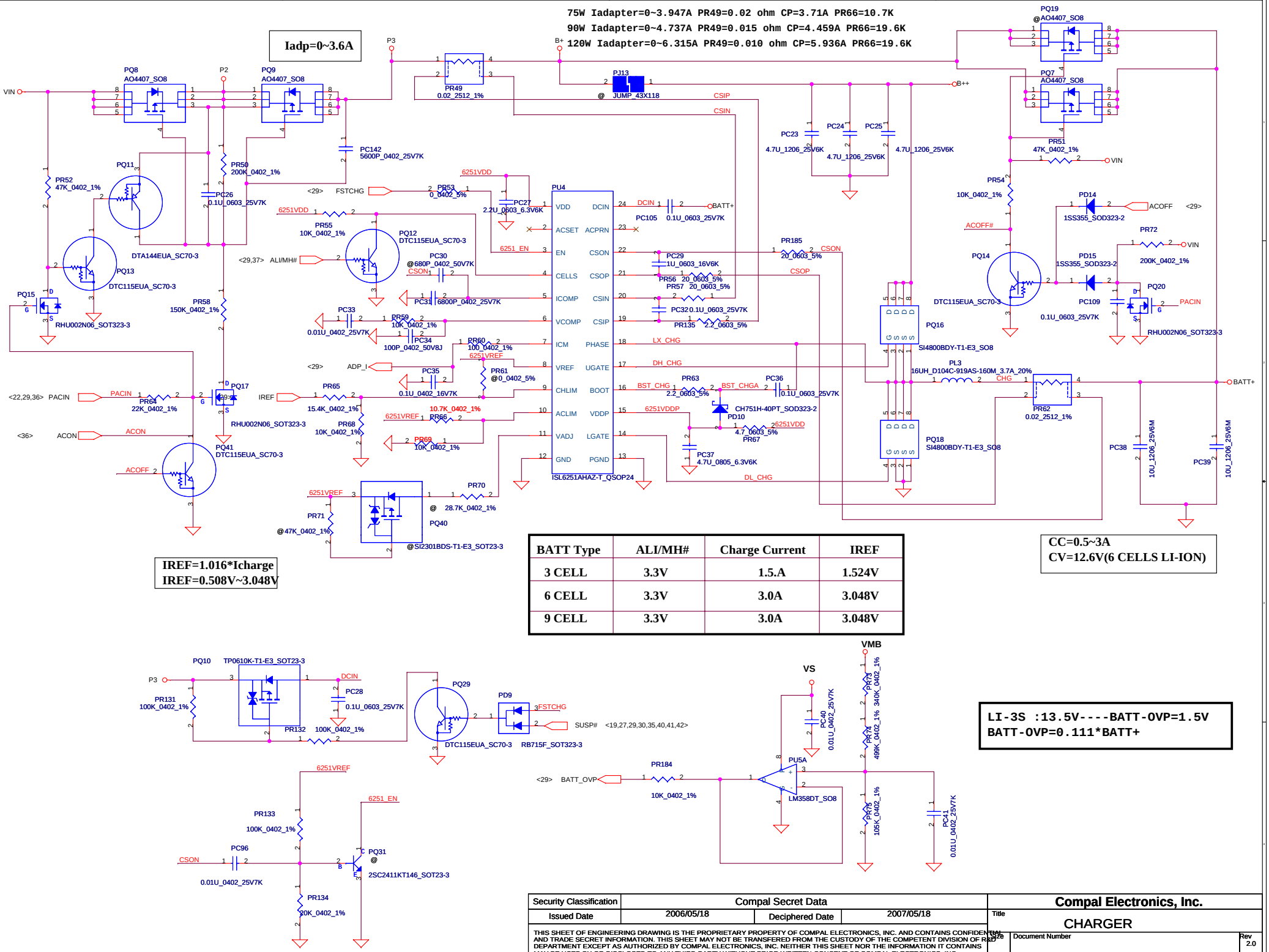

BATT Type	ALI/MH#	Charge Current	IREF
3 CELL	3.3V	1.5.A	1.524V
6 CELL	3.3V	3.0A	3.048V
9 CELL	3.3V	3.0A	3.048V

Security Classification	Compal Secret Data		
Issued Date	2006/05/18	Deciphered Date	2007/05/18

THIS SHEET OF ENGINEERING DRAWING IS THE PROPRIETARY PROPERTY OF COMPAL ELECTRONICS, INC. AND CONTAINS CONFIDENTIAL AND TRADE SECRET INFORMATION. THIS SHEET MAY NOT BE TRANSFERED FROM THE CUSTODY OF THE COMPETENT DIVISION OF R&D DEPARTMENT EXCEPT AS AUTHORIZED BY COMPAL ELECTRONICS, INC. NEITHER THIS SHEET NOR THE INFORMATION IT CONTAINS MAY BE USED BY OR DISCLOSED TO ANY THIRD PARTY WITHOUT PRIOR WRITTEN CONSENT OF COMPAL ELECTRONICS, INC.

Compal Electronics, Inc.

Title: CHARGER

Size | Document Number | Rev 2.0

Date: Tuesday, May 22, 2007 | Sheet 38 of 47

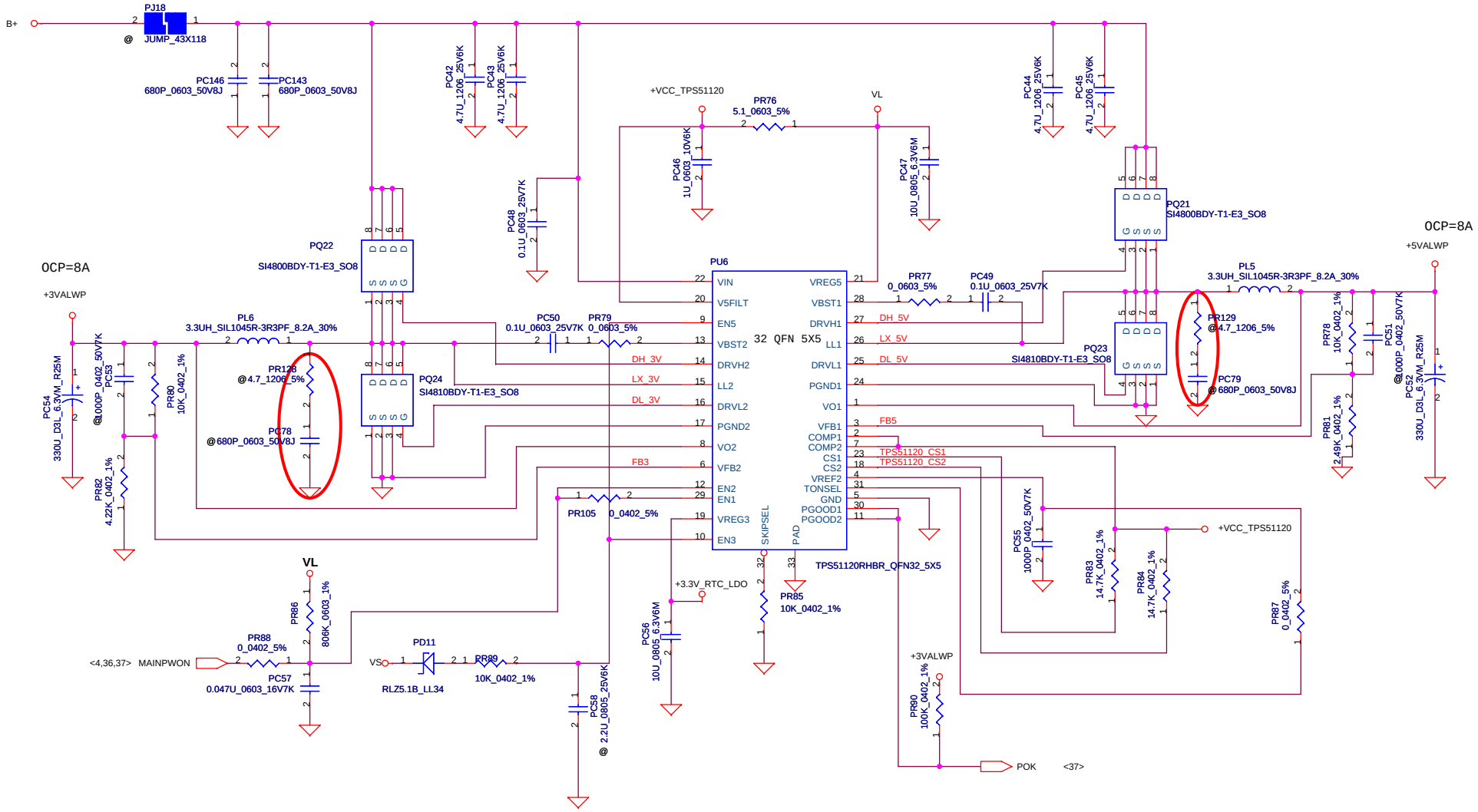

Security Classification	Compal Secret Data			Compal Electronics, Inc.
Issued Date	2006/05/18	Deciphered Date	2007/05/18	Title: +5V/+3V
				Size: Custom; Document Number: LA-3481P; Rev: 2.0
				Date: Tuesday, May 22, 2007; Sheet 39 of 47

THIS SHEET OF ENGINEERING DRAWING IS THE PROPRIETARY PROPERTY OF COMPAL ELECTRONICS, INC. AND CONTAINS CONFIDENTIAL AND TRADE SECRET INFORMATION. THIS SHEET MAY NOT BE TRANSFERED FROM THE CUSTODY OF THE COMPETENT DIVISION OF R&D DEPARTMENT EXCEPT AS AUTHORIZED BY COMPAL ELECTRONICS, INC. NEITHER THIS SHEET NOR THE INFORMATION IT CONTAINS MAY BE USED BY OR DISCLOSED TO ANY THIRD PARTY WITHOUT PRIOR WRITTEN CONSENT OF COMPAL ELECTRONICS, INC.

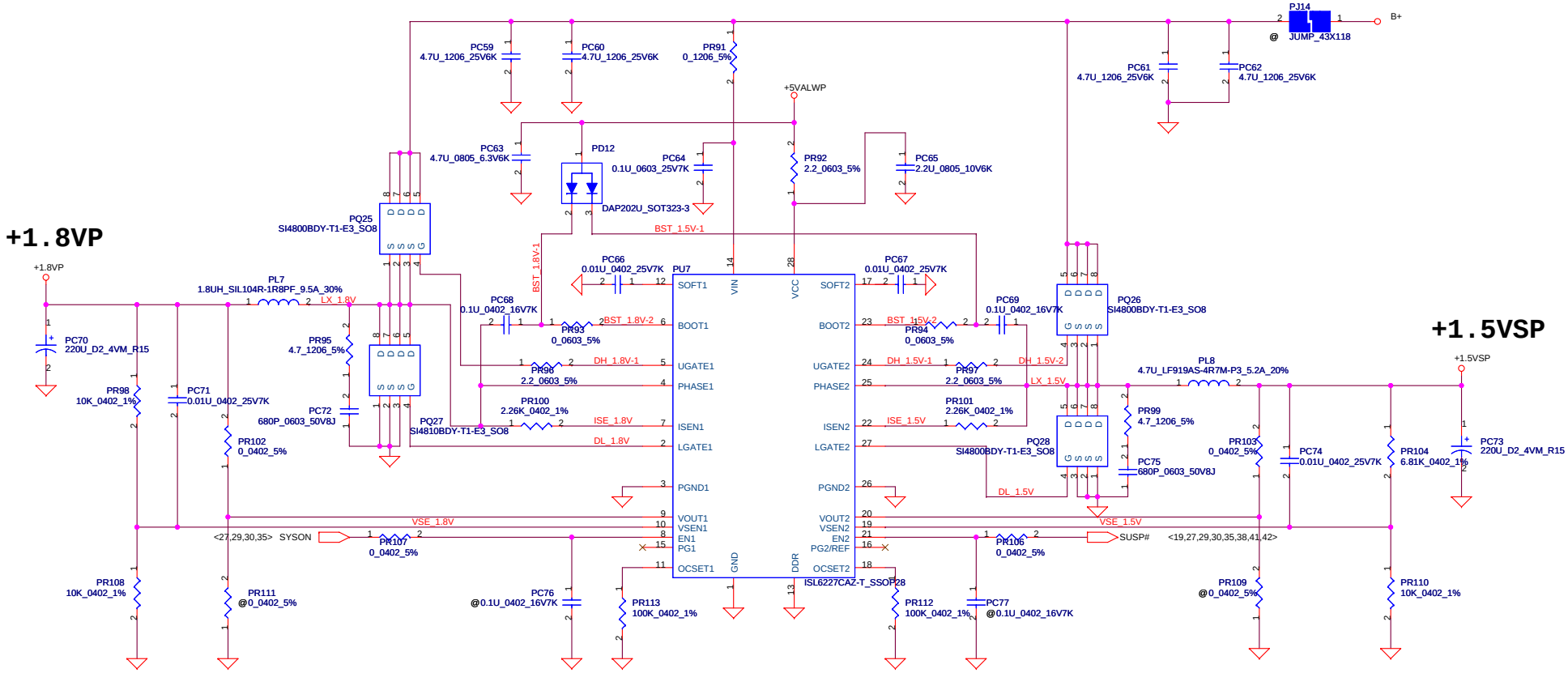

Security Classification	Compal Secret Data			Compal Electronics, Inc.
Issued Date	2006/05/18	Deciphered Date	2007/05/18	Title: 1.8V / 1.2V
				Size: Document Number: Rev 2.0
Date: Tuesday, May 22, 2007				Sheet 40 of 47

THIS SHEET OF ENGINEERING DRAWING IS THE PROPRIETARY PROPERTY OF COMPAL ELECTRONICS, INC. AND CONTAINS CONFIDENTIAL AND TRADE SECRET INFORMATION. THIS SHEET MAY NOT BE TRANSFERED FROM THE CUSTODY OF THE COMPETENT DIVISION OF R&D DEPARTMENT EXCEPT AS AUTHORIZED BY COMPAL ELECTRONICS, INC. NEITHER THIS SHEET NOR THE INFORMATION IT CONTAINS MAY BE USED BY OR DISCLOSED TO ANY THIRD PARTY WITHOUT PRIOR WRITTEN CONSENT OF COMPAL ELECTRONICS, INC.

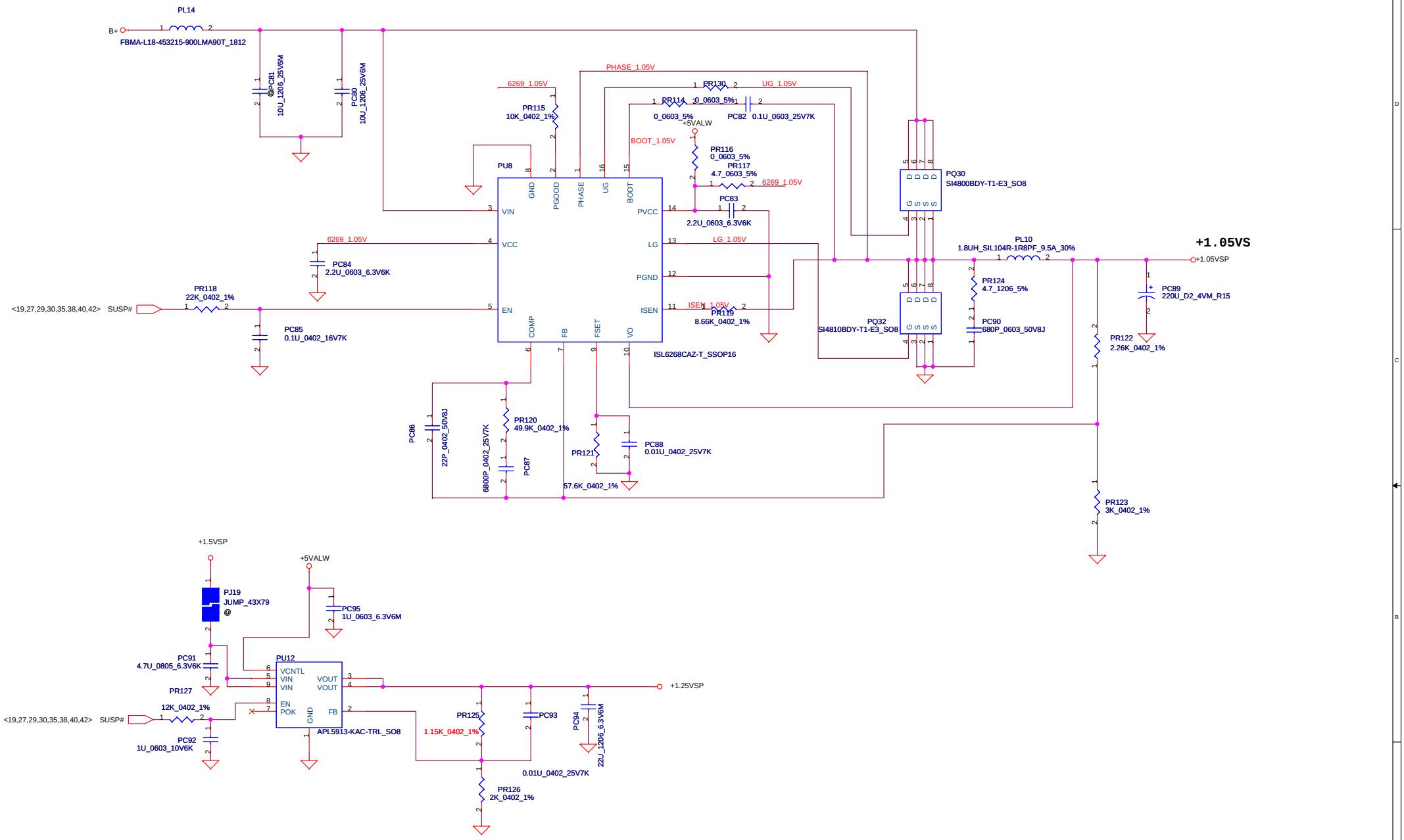

Security Classification	Compal Secret Data			Compal Electronics, Inc.
Issued Date	2006/05/18	Deciphered Date	2007/05/18	Title: 1.05V / 1.25V
				Size: D Document Number: Rev 2.0
				Date: Tuesday, May 22, 2007 Sheet 41 of 47

THIS SHEET OF ENGINEERING DRAWING IS THE PROPRIETARY PROPERTY OF COMPAL ELECTRONICS, INC. AND CONTAINS CONFIDENTIAL AND TRADE SECRET INFORMATION. THIS SHEET MAY NOT BE TRANSFERED FROM THE CUSTODY OF THE COMPETENT DIVISION OF R&D DEPARTMENT EXCEPT AS AUTHORIZED BY COMPAL ELECTRONICS, INC. NEITHER THIS SHEET NOR THE INFORMATION IT CONTAINS MAY BE USED BY OR DISCLOSED TO ANY THIRD PARTY WITHOUT PRIOR WRITTEN CONSENT OF COMPAL ELECTRONICS, INC.

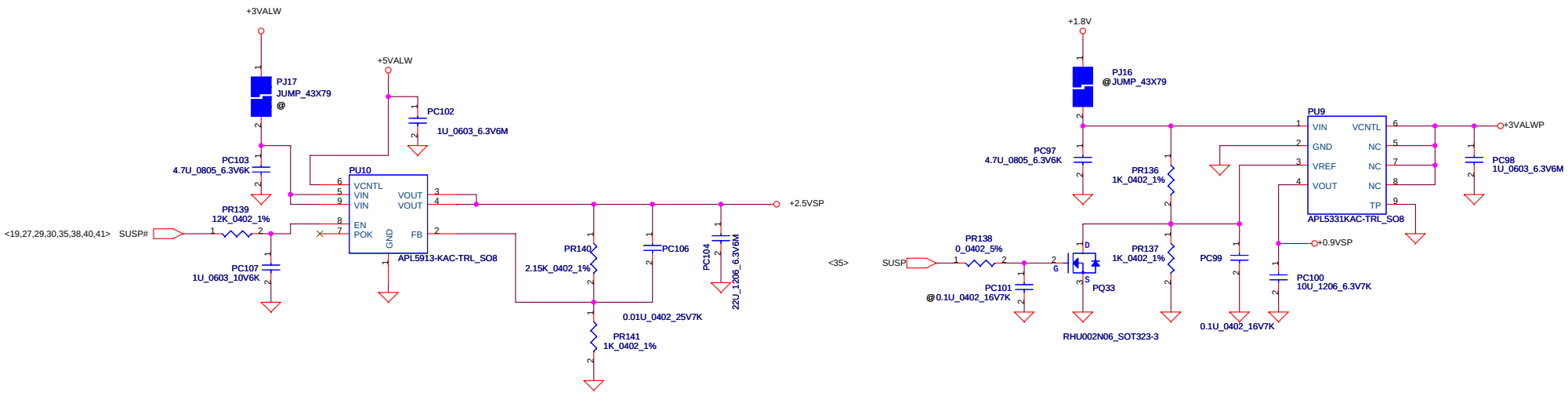

Security Classification	Compal Secret Data		
Issued Date	2006/05/18	Deciphered Date	2007/05/18

THIS SHEET OF ENGINEERING DRAWING IS THE PROPRIETARY PROPERTY OF COMPAL ELECTRONICS, INC. AND CONTAINS CONFIDENTIAL AND TRADE SECRET INFORMATION. THIS SHEET MAY NOT BE TRANSFERED FROM THE CUSTODY OF THE COMPETENT DIVISION OF R&D DEPARTMENT EXCEPT AS AUTHORIZED BY COMPAL ELECTRONICS, INC. NEITHER THIS SHEET NOR THE INFORMATION IT CONTAINS MAY BE USED BY OR DISCLOSED TO ANY THIRD PARTY WITHOUT PRIOR WRITTEN CONSENT OF COMPAL ELECTRONICS, INC.

Compal Electronics, Inc.

Title: 1.05V / 0.9V / 1.5V

Size | Document Number | Rev 2.0

Date: Tuesday, May 22, 2007 | Sheet 42 of 47

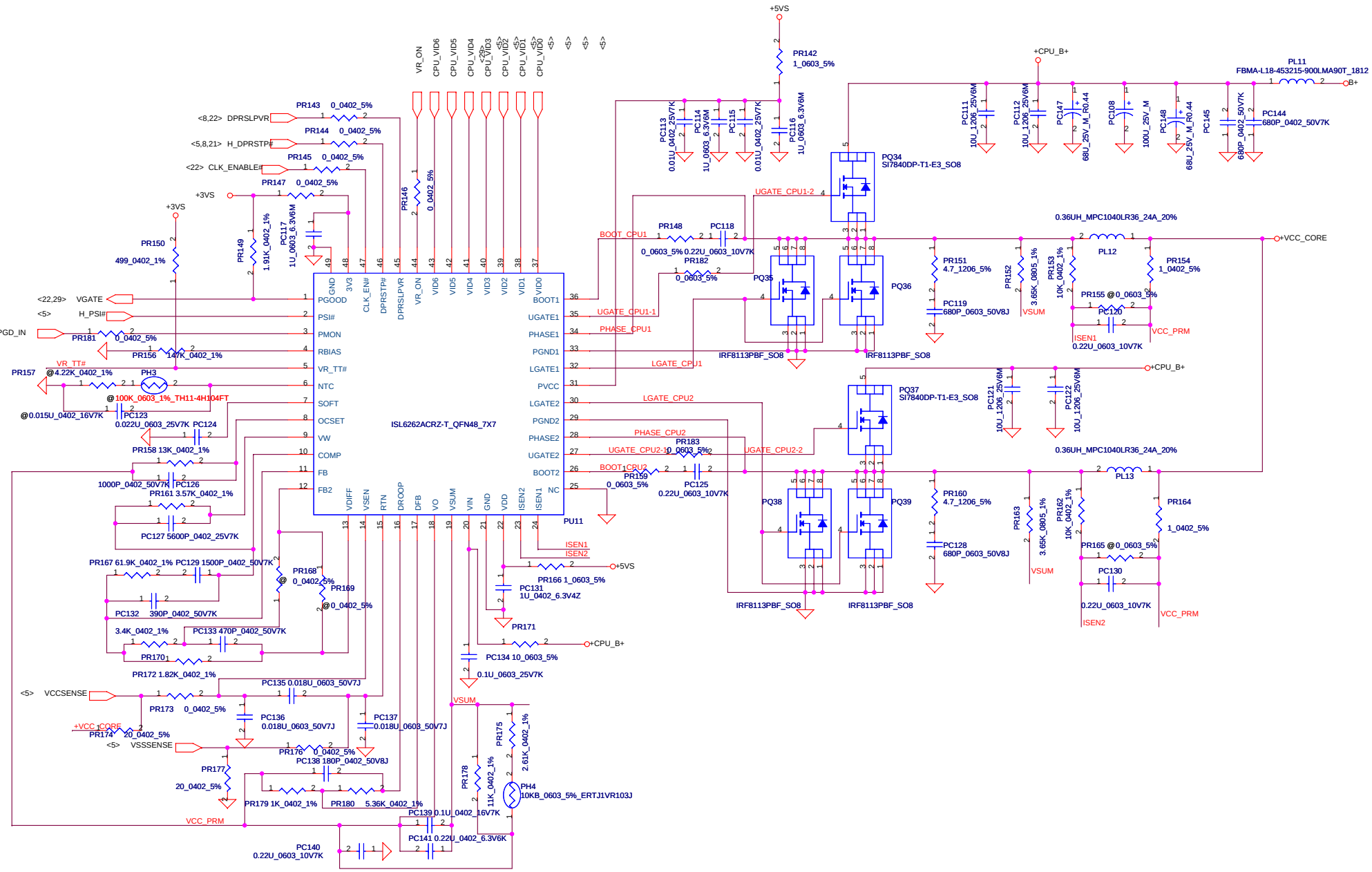

Security Classification	Compal Secret Data		
Issued Date	2005/06/23	Deciphered Date	2006/06/23

THIS SHEET OF ENGINEERING DRAWING IS THE PROPRIETARY PROPERTY OF COMPAL ELECTRONICS, INC. AND CONTAINS CONFIDENTIAL AND TRADE SECRET INFORMATION. THIS SHEET MAY NOT BE TRANSFERED FROM THE CUSTODY OF THE COMPETENT DIVISION OF R&D DEPARTMENT EXCEPT AS AUTHORIZED BY COMPAL ELECTRONICS, INC. NEITHER THIS SHEET NOR THE INFORMATION IT CONTAINS MAY BE USED BY OR DISCLOSED TO ANY THIRD PARTY WITHOUT PRIOR WRITTEN CONSENT OF COMPAL ELECTRONICS, INC.

Compal Electronics, Inc.

Title: +CPU_CORE

Size: Custom | Document Number: LA-3481P | Rev: 2.0

Date: Tuesday, May 22, 2007 | Sheet 43 of 47

HW4 Product Improvement Record (P.I.R.)

ISKAA LA-3481P SCHEMATIC CHANGE LIST
REVISION CHANGE: 0.1 TO 2A

Rev 0.1 to 0.2

NO	PAGE	MODIFICATION LIST	PURPOSE
1	17	Add JP39	Add CRT Board
2	22	Change R322 from 150 ohm to 10K ohm	From Intel recommend
3	12	Delete L13, L14, C199, C140	1.25VS_DMI share with 1.25VS_PEG
4	31	Modify PCI-E for WLAN and Robson	Design issue
5	15	Delete C234	Share with C729

Rev 0.2 to 0.3

NO	PAGE	MODIFICATION LIST	PURPOSE
1	11	Remove C116	From Intel recommend
2	16	Change EXP_CLKREQ# from U4.44 to U4.3	Common design with ISRAA
3	16	Change CLK_MCH_3GPLL from U4.27 to U4.47	Common design with ISRAA
4	16	Change CLK_PCIE_CARD from U4.47 to U4.27	Common design with ISRAA
5	19	Add R949 and Remove D11	Design change
6	19	Add JP42	Co-layout 30 pin LVDS connector
7	24	Add R874	Reserve the resister for EMI
8	29	Change EC from KB910 to KB926	Design change
9	34	Change SPI BIOS U52	Design change
10	34	Add Q54, Q55	HDD LED controlled by SB
11	47	Add Energy Star circuit	Design change
12	10	Change C84~C115 from Y5V to X7R	For VGA thermal issue

Rev 0.3 to 0.4

NO	PAGE	MODIFICATION LIST	PURPOSE
1	12	Modify L58 to 4.7 ohm	For TV-out wave line issue
2	12	Change R686 to 2.2uf	For TV-out wave line issue
3	12	Modify L15 to 100 ohm	from Intel recommend for new chip set
4	12	Change R694 to 1uf	from Intel recommend for new chip set
5	26	Reserve L92,R941,R944,R946,R947, C965,C963,R937,C962,C964	Reserve for LAN controller 8111C
6	33	Modify Camera power from +5Vs to +5VALW	Change for Camera can't detect from S3 resume
7	29	Add R928	For CIR issue
7	22	Add R903 and R927	For CIR issue

Rev 0.4 to 1.0

NO	PAGE	MODIFICATION LIST	PURPOSE
		Change PCB 0.4 to 1.0	Modify Revision for MP
1	27	Add R935	Design for speaker select
2	28	Change L49, L50, L51, L52 to 0 ohm	For speaker issue
3	27	Change C517 and C519 from 1uf to 4.7uf	From Realtek recommend for THD+N issue
4	31	Add R954	For HD-DVD function

Rev 1.0 to 2.0

NO	PAGE	MODIFICATION LIST	PURPOSE
1	18	Add U54 and C966	For HDMI hot plug issue
2	18	Remove 1932 circuit	M72 and M76 has internal HDMI
3	18	Remove CMD circuit	For EMI issue
4	18	Add L66, L67, L68, L69	For EMI issue
5	18	Add Q134,Q135 level-shifting circuit	For HDMI level-shifting
6	18	Change R705 and R706 to 19.1K ohm	From ATI recommend
7	24	Reserve R713, R714, R715, C873, C875, C877	For EMI issue
8	32	Reserve C650~C676	For EMI issue
9	34	Reserve C682~C687	For EMI issue
10	18	Change R621 to 100K ohm and R723 to 2.2K ohm	For HDMI level-shifting

Rev 2.0 to 2A

NO	PAGE	MODIFICATION LIST	PURPOSE
1	18	Add U55 level-shifting circuit	For HDMI level-shifting
2	29	Change C943 and C944 from 10pf to 15pf	From ENE recommend for crystal issue
3	23	Change C360 from 0.1uf to 1uf	From Intel recommend for boot-up issue
4	22	Remove R327, R328, R329	For leakage issue

Security Classification	Compal Secret Data		
Issued Date	2006/06/30	Deciphered Date	2008/05/21

THIS SHEET OF ENGINEERING DRAWING IS THE PROPRIETARY PROPERTY OF COMPAL ELECTRONICS, INC. AND CONTAINS CONFIDENTIAL AND TRADE SECRET INFORMATION. THIS SHEET MAY NOT BE TRANSFERED FROM THE CUSTODY OF THE COMPETENT DIVISION OF R&D DEPARTMENT EXCEPT AS AUTHORIZED BY COMPAL ELECTRONICS, INC. NEITHER THIS SHEET NOR THE INFORMATION IT CONTAINS MAY BE USED BY OR DISCLOSED TO ANY THIRD PARTY WITHOUT PRIOR WRITTEN CONSENT OF COMPAL ELECTRONICS, INC.

Compal Electronics, Inc.

Title: P.I.R.

Size | Document Number: LA-3481P | Rev: 2.0

Date: Saturday, June 23, 2007 | Sheet 44 of 47

Screw Hole

NB

U3
965GM_R3
GMR3@

U3
965GM_R1
GMR1@

U3
965PM_R1
PMR1@

U3
GL960_R3
GLR3@

ICH8M

U10
ICH8M_R1
ICH8MR1@

LAN

U37
100M
100M@

R694
1U_0402_6.3V4Z
GM@

R686
2.2U_0402_6.3VM
GM@

TRANSFORMER

U19
100M
100M@

PCB

PCBA
LA-3481P_DAZ

CARDBUS

U14
TI8402
8402@

DC-JACK

PJP1
SINGA_2DW-0005-B03
45@

FD4 FD6 FD5 FD2 FD1 FD3

CF5 CF6 CF10 CF3 CF9

CF4 CF8 CF2 CF7 CF1

H2 H_C276D118
H3 H_C276D118
H4 H_C276D118
H5 H_C276D118
H6 H_C276D118
H7 H_C217D118
H8 H_C217D118
H9 H_C276D118
H10 H_C276D118
H11 H_C236D122
H12 H_C236D122
H13 H_C236D122
H14 H_C236D146
H30 H_C236D122
H15 H_C236D43
H16 H_C236D43
H17 H_C236D43
H31 H_C236D122
H18 H_C315D165
H19 H_C315D165
H20 H_C315D165
H21 H_C315D165
H22 H_C276D158
H23 H_C276D158
H32 H_C276D158
H24 H_C118D118N
H25 H_O118X197D118X197N
H26 H_O197X55D158X16
H27 H_S315D118
H28 H_S315D118
H29 H_S315D118

Security Classification	Compal Secret Data		
Issued Date	2006/08/05	Deciphered Date	2007/08/05

THIS SHEET OF ENGINEERING DRAWING IS THE PROPRIETARY PROPERTY OF COMPAL ELECTRONICS, INC. AND CONTAINS CONFIDENTIAL AND TRADE SECRET INFORMATION. THIS SHEET MAY NOT BE TRANSFERED FROM THE CUSTODY OF THE COMPETENT DIVISION OF R&D DEPARTMENT EXCEPT AS AUTHORIZED BY COMPAL ELECTRONICS, INC. NEITHER THIS SHEET NOR THE INFORMATION IT CONTAINS MAY BE USED BY OR DISCLOSED TO ANY THIRD PARTY WITHOUT PRIOR WRITTEN CONSENT OF COMPAL ELECTRONICS, INC.

Compal Electronics, Inc.

Title: **ISPD & Screw Hole**

Size | Document Number: **LA-3481P** | Rev: 2.0

Date: Tuesday, May 22, 2007 | Sheet 45 of 47

NO	DATE	PAGE	MODIFICATION LIST	PURPOSE
	9/14	P.39	Change PACIN to GND	Change to AUTO-SKIP mode
	9/14	P.39	Add PR105 0_0402_5%	Reserve control sequence pin
	9/14	P.37	Change PF2 to 15A	Increase design margine
	10/24	P.36,37,43	Change PL1,PL2,PL11 to Tai-Tech	Buyer request
	10/24	P.39,43	Add PC143,PC144,PC145	EMI request
	10/24	P.41,43	Add snubber PR124,PC90,PR151,PC119,PR160,PC128	EMI request
	10/24	P.41	Change PR119 to 5.49K	Modify 1.05V OCP point
	10/24	P.40	Change PC70 to 330U_D2_9m ohm	Reduce the 1.8V ripple

Security Classification	Compal Secret Data		
Issued Date	2005/06/01	Deciphered Date	2006/06/01

THIS SHEET OF ENGINEERING DRAWING IS THE PROPRIETARY PROPERTY OF COMPAL ELECTRONICS, INC. AND CONTAINS CONFIDENTIAL AND TRADE SECRET INFORMATION. THIS SHEET MAY NOT BE TRANSFERED FROM THE CUSTODY OF THE COMPETENT DIVISION OF R&D DEPARTMENT EXCEPT AS AUTHORIZED BY COMPAL ELECTRONICS, INC. NEITHER THIS SHEET NOR THE INFORMATION IT CONTAINS MAY BE USED BY OR DISCLOSED TO ANY THIRD PARTY WITHOUT PRIOR WRITTEN CONSENT OF COMPAL ELECTRONICS, INC.

Compal Electronics, Inc.

Title: **Power PIR**

Size | Document Number: **LA-3481P** | Rev: 2.0

Date: Tuesday, May 22, 2007 | Sheet 46 of 47

+3VALW TO +3V_SB

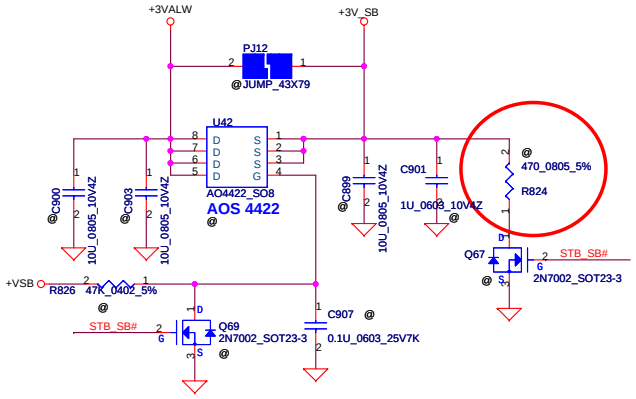

+5VALW TO +5V_SB

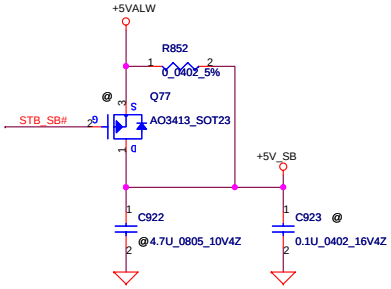

+3VALW TO +3V_WLAN

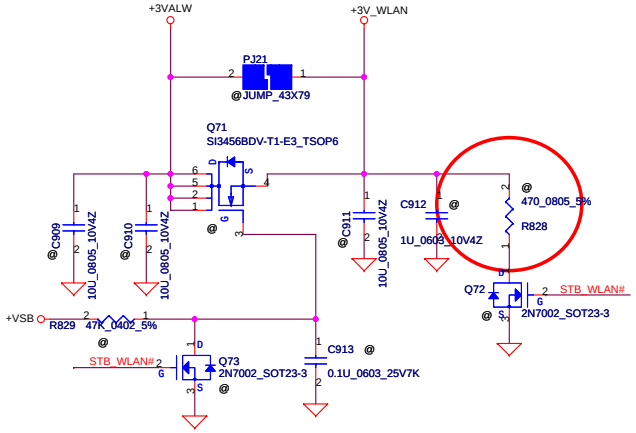

+3VALW TO +3V_LAN

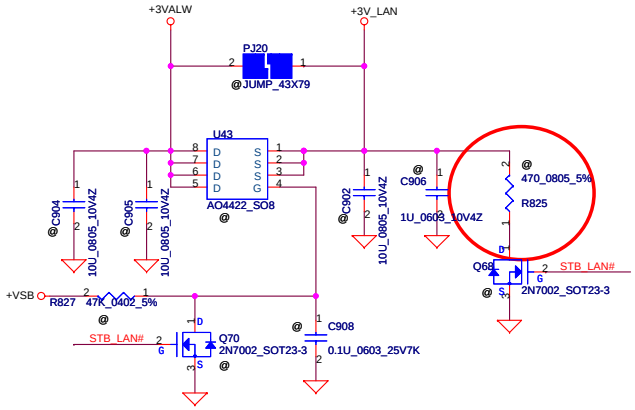

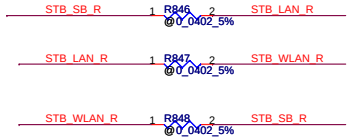

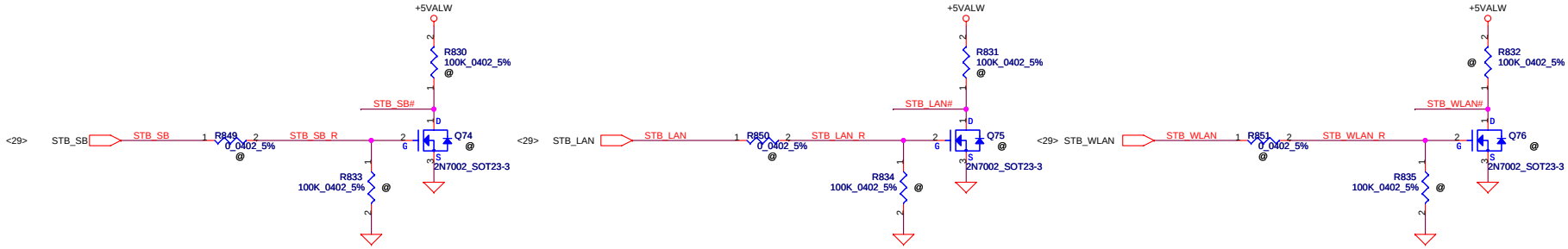

Security Classification	Compal Secret Data		
Issued Date	2006/06/30	Deciphered Date	2007/06/30

THIS SHEET OF ENGINEERING DRAWING IS THE PROPRIETARY PROPERTY OF COMPAL ELECTRONICS, INC. AND CONTAINS CONFIDENTIAL AND TRADE SECRET INFORMATION. THIS SHEET MAY NOT BE TRANSFERED FROM THE CUSTODY OF THE COMPETENT DIVISION OF R&D DEPARTMENT EXCEPT AS AUTHORIZED BY COMPAL ELECTRONICS, INC. NEITHER THIS SHEET NOR THE INFORMATION IT CONTAINS MAY BE USED BY OR DISCLOSED TO ANY THIRD PARTY WITHOUT PRIOR WRITTEN CONSENT OF COMPAL ELECTRONICS, INC.

Compal Electronics, Inc.

Title: **DC/DC I/F & Screw**

Size: D | Document Number: **LA-3481P** | Rev: 2.0

Date: Tuesday, May 22, 2007 | Sheet 47 of 47