LBK-ADDs Schematic

REV : A00

```
  @ : Depop Component for All
 1@ : Pop   Component for Lindbergh Series
 2@ : Pop   Component for Kapalua series
```

DDQ12/LA1901 Schematic with Capture CIS and Function field
uFCPGA Banias
06-24-2003
REV: 1.0

DELL CONFIDENTIAL/PROPRIETARY

Compal Electronics, Inc.		
Title: Cover Sheet		
Size	Document Number: DDQ12/11/01 with LA-1901	Rev 1.0
Date: Thursday, July 03, 2003	Sheet 1 of 58	

Compal confidential

Block Diagram

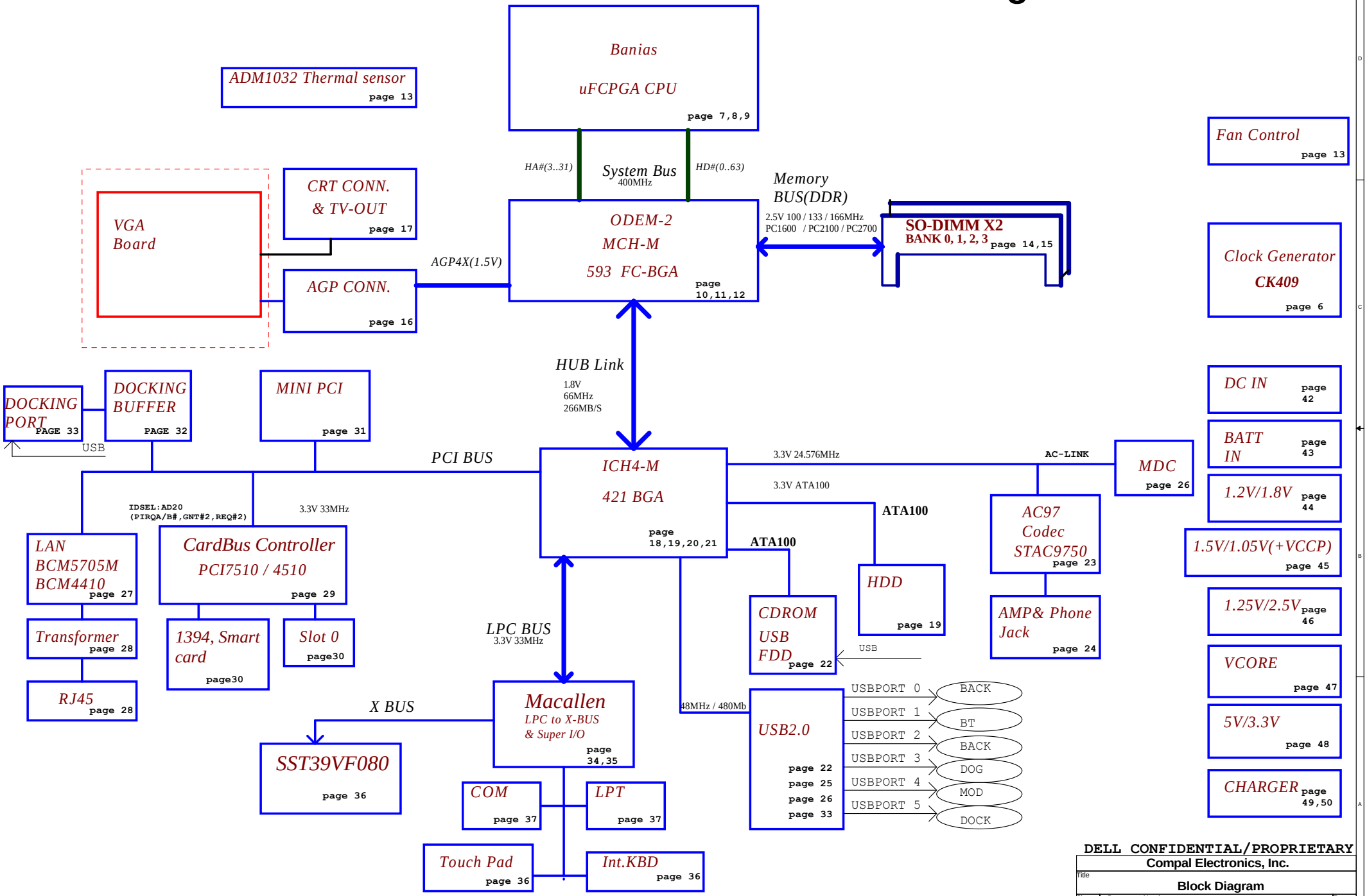

DELL CONFIDENTIAL/PROPRIETARY

Compal Electronics, Inc.		
Title: Block Diagram		
Size	Document Number: DDQ12/11/01 with LA-1901	Rev 1.0
Date: Thursday, July 03, 2003	Sheet 2 of 58	

PM TABLE

power plane / State	+3VALW +5VALW	+3VSUS +5VSUS +2.5V_MEM +1.5VSUS	+5VRUN +3VRUN +1.8VRUN +1.5VRUN +1.2VRUN +VCC_CORE +VCCP +12V
S0	ON	ON	ON
S1	ON	ON	ON
S3	ON	ON	OFF
S5 S4/AC	ON	OFF	OFF
S5 S4/AC don't exist	OFF	OFF	OFF

PCI TABLE

PCI DEVICE	IDSEL	REQ#/GNT#	PIRQ
CARD BUS	AD17	1	D,C
LAN	AD16	4	C
DOCK	AD24	0	B
MINI PCI	AD19	3	D,B(NP)
VGA			A,B(NP)

USB TABLE

USB PORT#	DESTINATION
0	BACK
1	BLUETOOTH
2	BACK
3	DOG
4	MOD
5	DOCK

DELL CONFIDENTIAL/PROPRIETARY

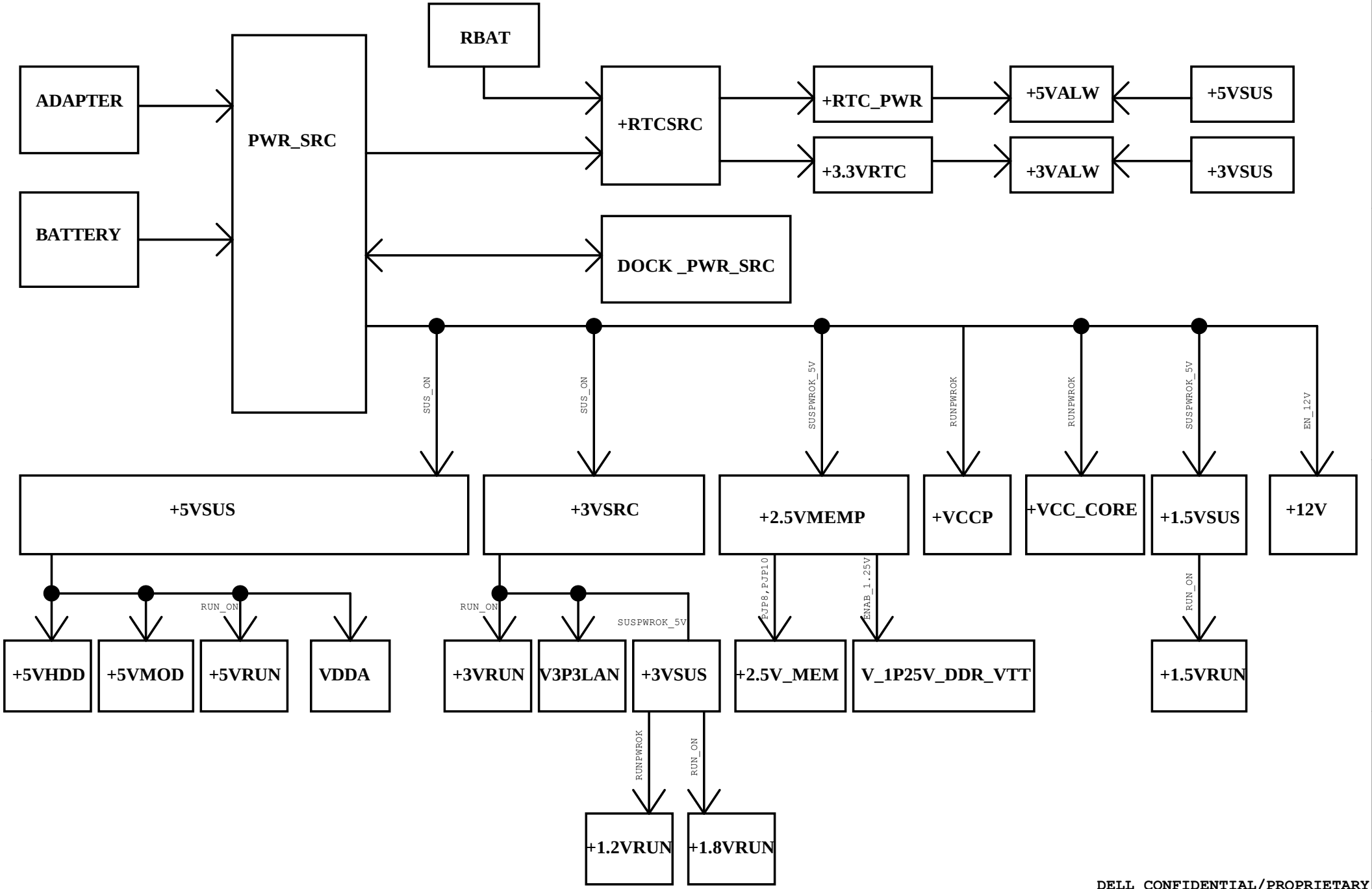

DELL CONFIDENTIAL/PROPRIETARY

Compal Electronics, Inc.		
Title: Power Rail		
Size	Document Number: DDQ12/11/01 with LA-1901	Rev 1.0
Date: Thursday, July 03, 2003	Sheet 4 of 58	

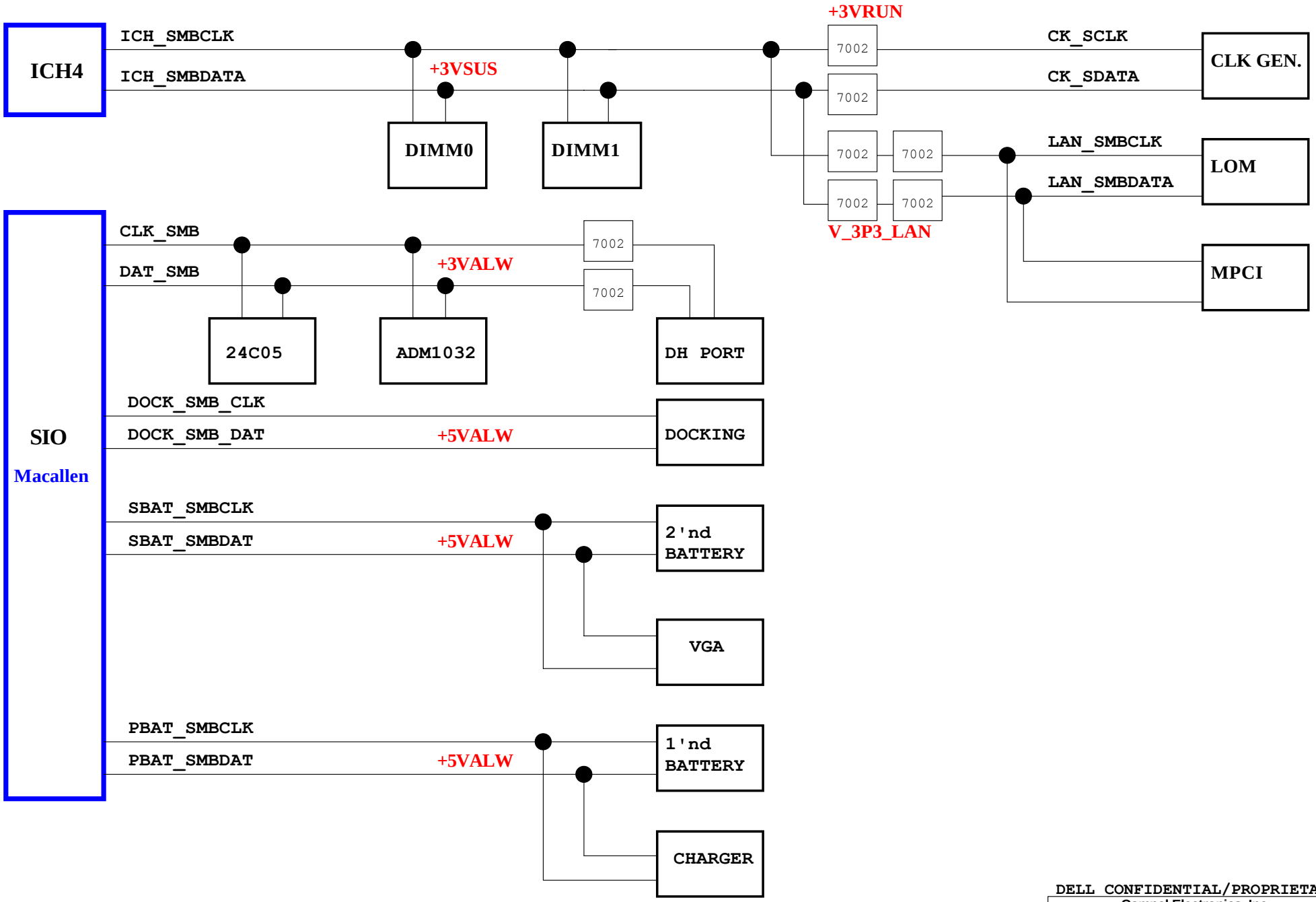

DELL CONFIDENTIAL/PROPRIETARY

Compal Electronics, Inc.

Title	SMBUS TOPOLOGY	
Size	Document Number DDQ12/11/01 with LA-1901	Rev 1.0
Date: Thursday, July 03, 2003	Sheet 5 of 58	

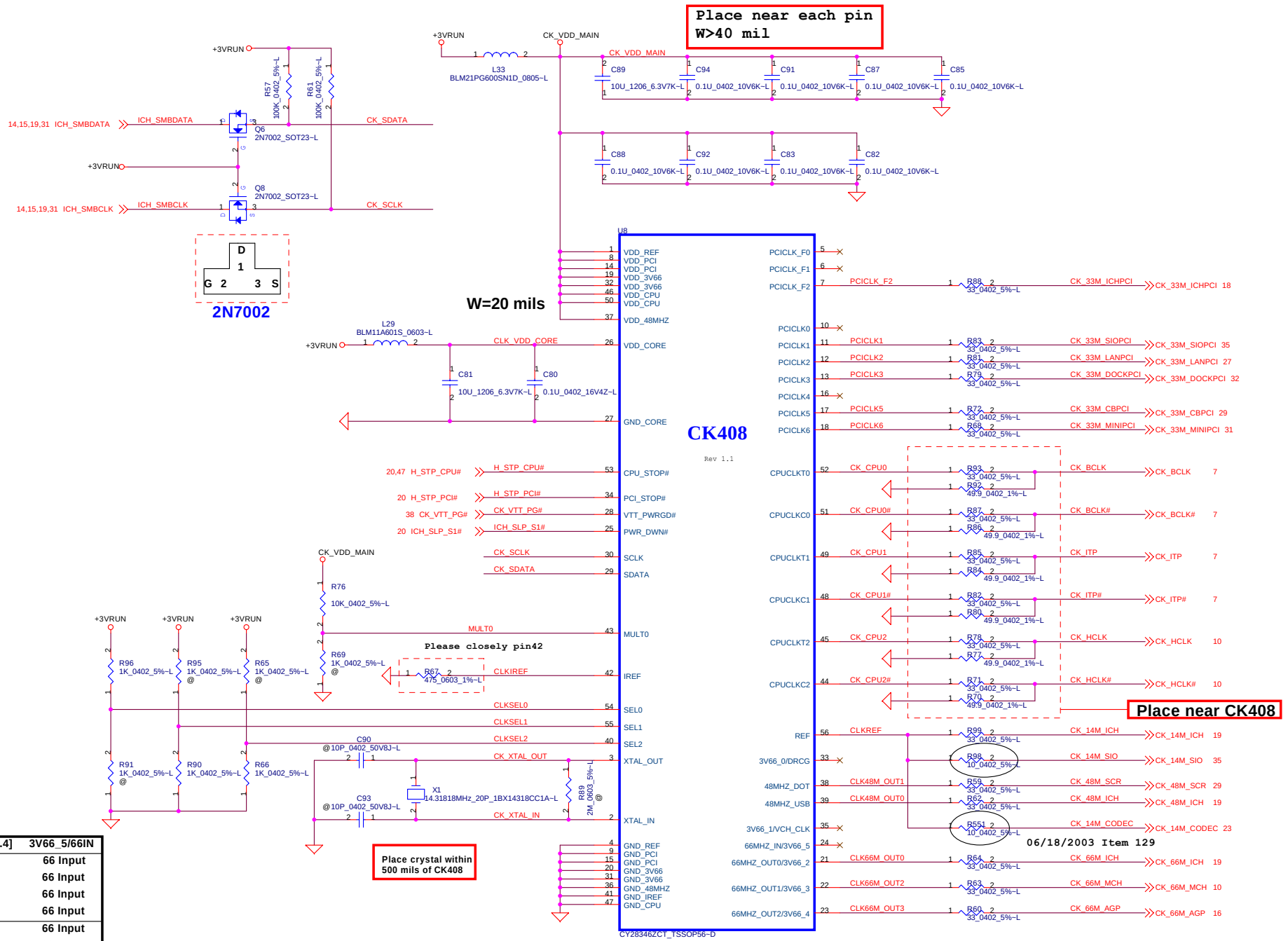

S2	S1	S0	CPU	3V66[0..4]	3V66_5/66IN
1	0	0	66	66IN	66 Input
1	0	1	100	66IN	66 Input
1	1	0	200	66IN	66 Input
1	1	1	133	66IN	66 Input
0	0	0	66	66	66 Input
0	0	1	100	66	66 Input
0	1	0	200	66	66 Input
0	1	1	133	66	66 Input
Mid	0	0	Hi-z	Hi-z	Hi-z
Mid	0	1	TCLK/2	TCLK/2	TCLK/2
Mid	1	0	Reserve	Reserve	Reserve
Mid	1	1	Reserve	Reserve	Reserve

DELL CONFIDENTIAL/PROPRIETARY

Compal Electronics, Inc.

Title: Clock Generator

Size | Document Number: DDQ12/11/01 with LA-1901 | Rev 1.0

Date: Thursday, July 03, 2003 | Sheet 6 of 58

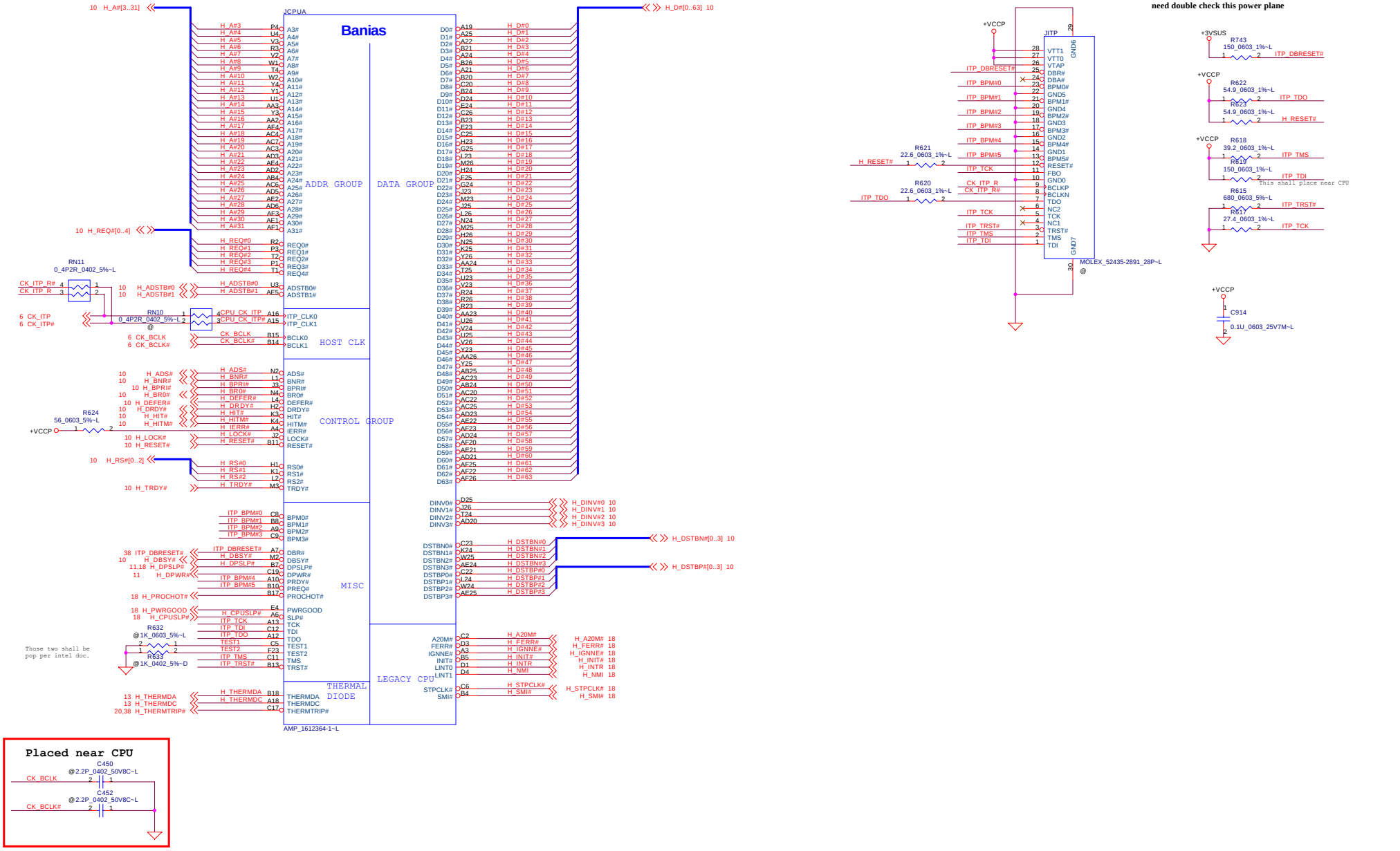

THIS SHEET OF ENGINEERING DRAWING IS THE PROPRIETARY PROPERTY OF COMPAL ELECTRONICS, INC. AND CONTAINS CONFIDENTIAL AND TRADE SECRET INFORMATION. THIS SHEET MAY NOT BE TRANSFERED FROM THE CUSTODY OF THE COMPETENT DIVISION OF R&D DEPARTMENT EXCEPT AS AUTHORIZED BY COMPAL ELECTRONICS, INC. NEITHER THIS SHEET NOR THE INFORMATION IT CONTAINS MAY BE USED BY OR DISCLOSED TO ANY THIRD PARTY WITHOUT PRIOR WRITTEN CONSENT OF COMPAL ELECTRONICS, INC.

DELL CONFIDENTIAL/PROPRIETARY

Compal Electronics, Inc.

Title	Banias Processor in mFCPGA479
Size C	Document Number DDQ12/11/01 with LA-1901
Rev	1.0
Date: Thursday, July 03, 2003	Sheet 7 of 58

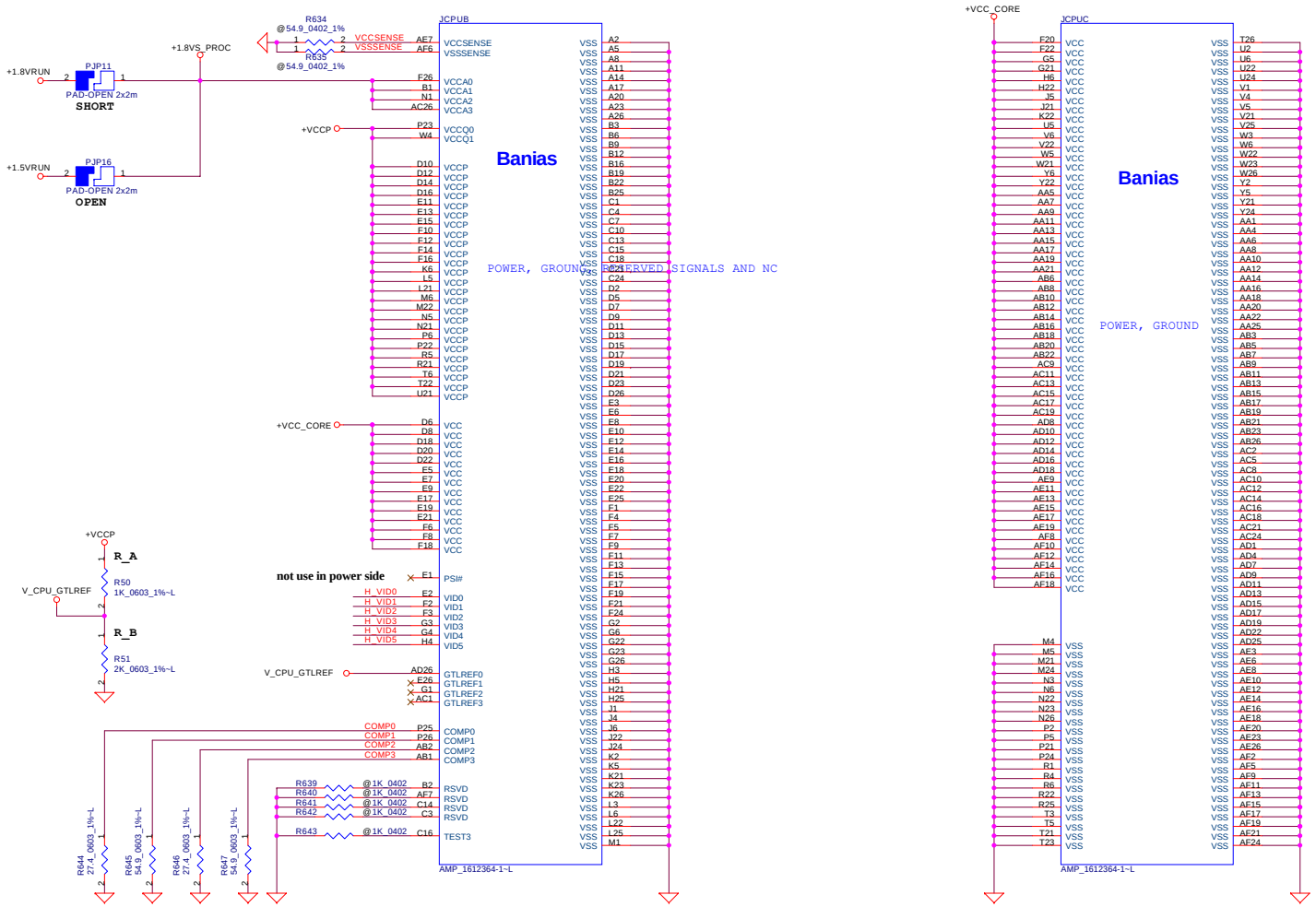

Resistor placed within 0.5" of CPU pin.Trace should be at least 25 miles away from any other toggling signal.

For test only ,Cmos output

CPU Voltage ID

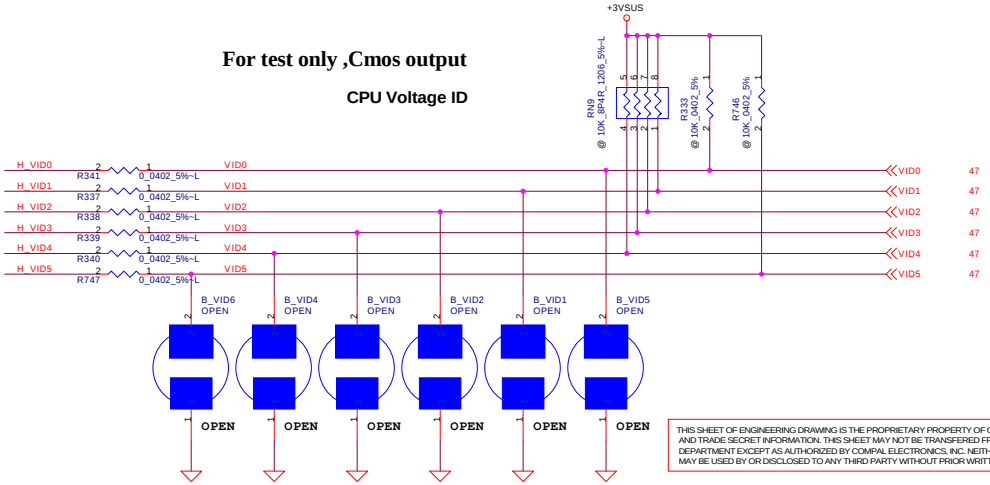

THIS SHEET OF ENGINEERING DRAWING IS THE PROPRIETARY PROPERTY OF COMPAL ELECTRONICS, INC. AND CONTAINS CONFIDENTIAL AND TRADE SECRET INFORMATION. THIS SHEET MAY NOT BE TRANSFERED FROM THE CUSTODY OF THE COMPETENT DIVISION OF R&D DEPARTMENT EXCEPT AS AUTHORIZED BY COMPAL ELECTRONICS, INC. NEITHER THIS SHEET NOR THE INFORMATION IT CONTAINS MAY BE USED BY OR DISCLOSED TO ANY THIRD PARTY WITHOUT PRIOR WRITTEN CONSENT OF COMPAL ELECTRONICS, INC.

DELL CONFIDENTIAL/PROPRIETARY

Compal Electronics, Inc.

Title	Banias Processor in mFCPGA479
Size C	Document Number DDQ12/11/01 with LA-1901
Rev	1.0
Date: Thursday, July 03, 2003	Sheet 8 of 58

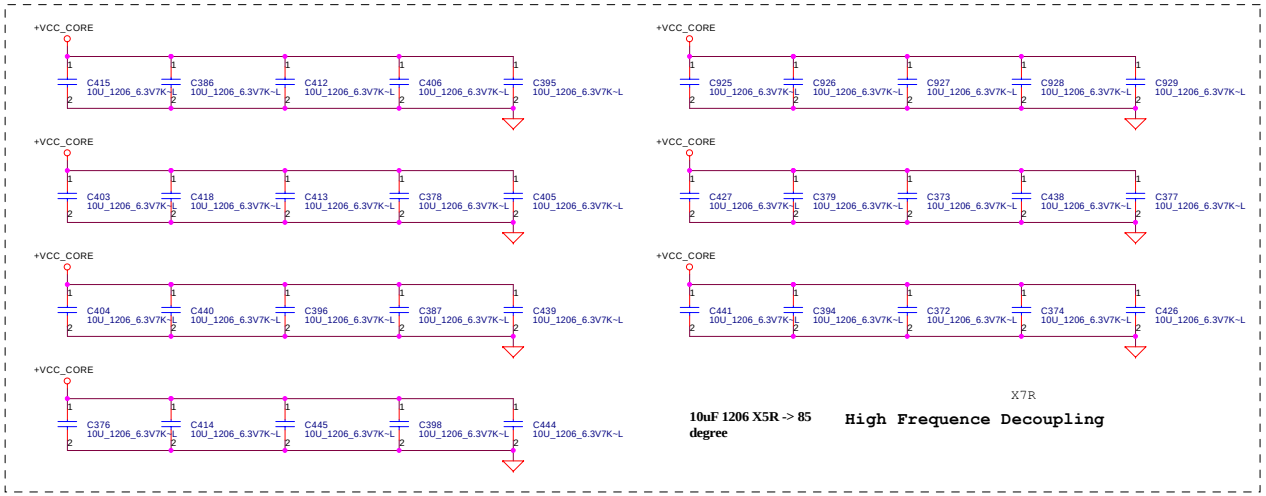

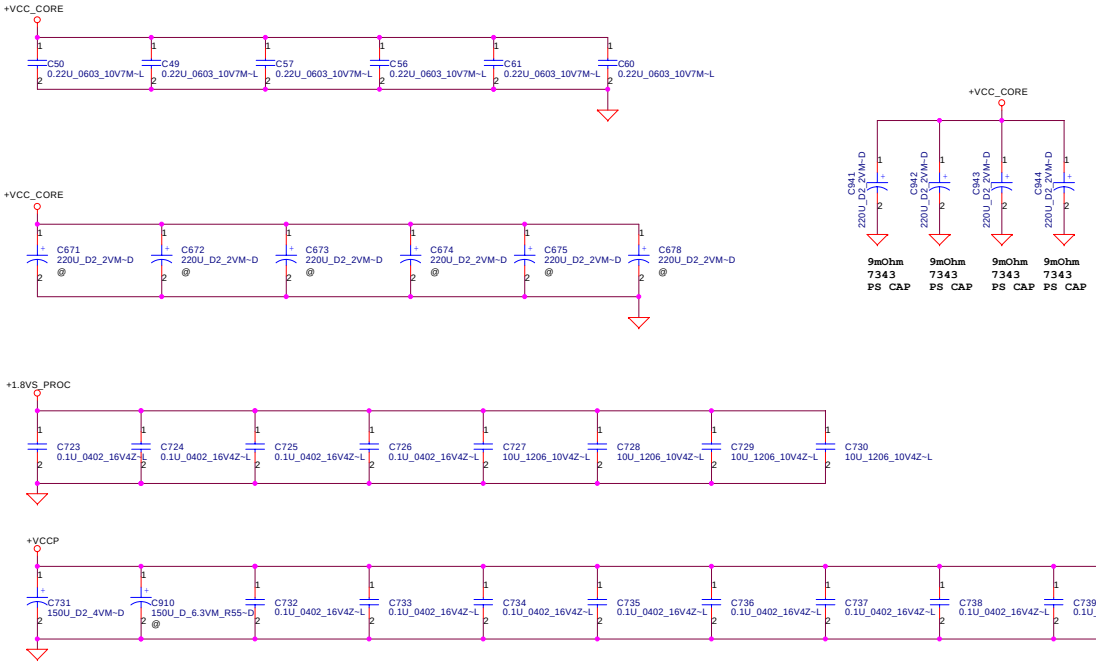

DELL CONFIDENTIAL/PROPRIETARY

Compal Electronics, Inc.

Title	CPU Bypass	
Size C	Document Number DDQ12/11/01 with LA-1901	Rev 1.0
Date: Thursday, July 03, 2003	Sheet 9 of 58	

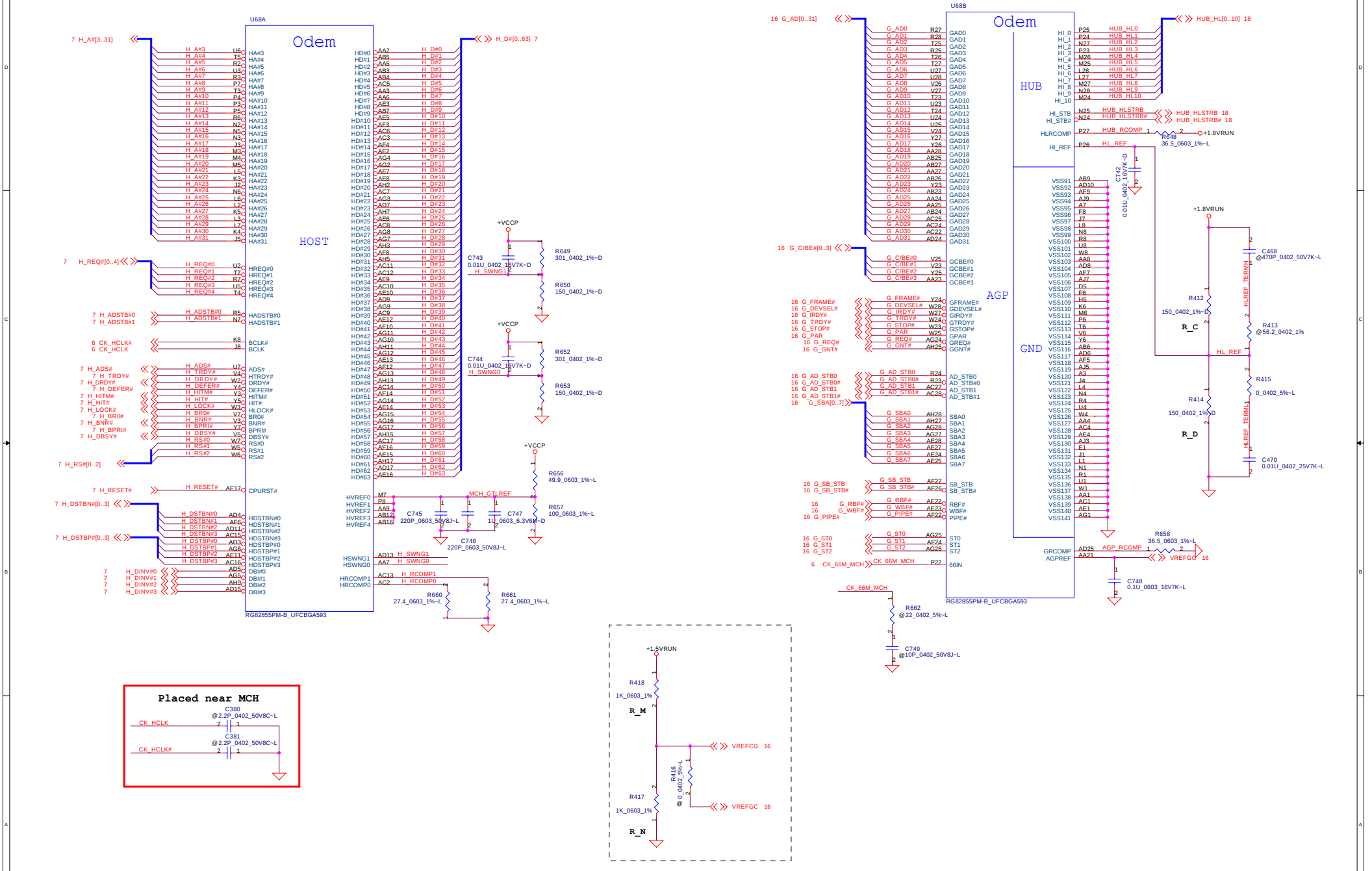

Compal Electronics, Inc.

THIS SHEET OF ENGINEERING DRAWING IS THE PROPRIETARY PROPERTY OF COMPAL ELECTRONICS, INC. AND CONTAINS CONFIDENTIAL AND TRADE SECRET INFORMATION. THIS SHEET MAY NOT BE TRANSFERED FROM THE CUSTODY OF THE COMPETENT DIVISION OF R&D DEPARTMENT EXCEPT AS AUTHORIZED BY COMPAL ELECTRONICS, INC. NEITHER THIS SHEET NOR THE INFORMATION IT CONTAINS MAY BE USED BY OR DISCLOSED TO ANY THIRD PARTY WITHOUT PRIOR WRITTEN CONSENT OF COMPAL ELECTRONICS, INC.

DELL CONFIDENTIAL/PROPRIETARY

Compal Electronics, Inc.

Title	Odem(1 of 3)
Size C	Document Number DDQ12/11/01 with LA-1901
Rev	1.0
Date: Thursday, July 03, 2003	Sheet 10 of 58

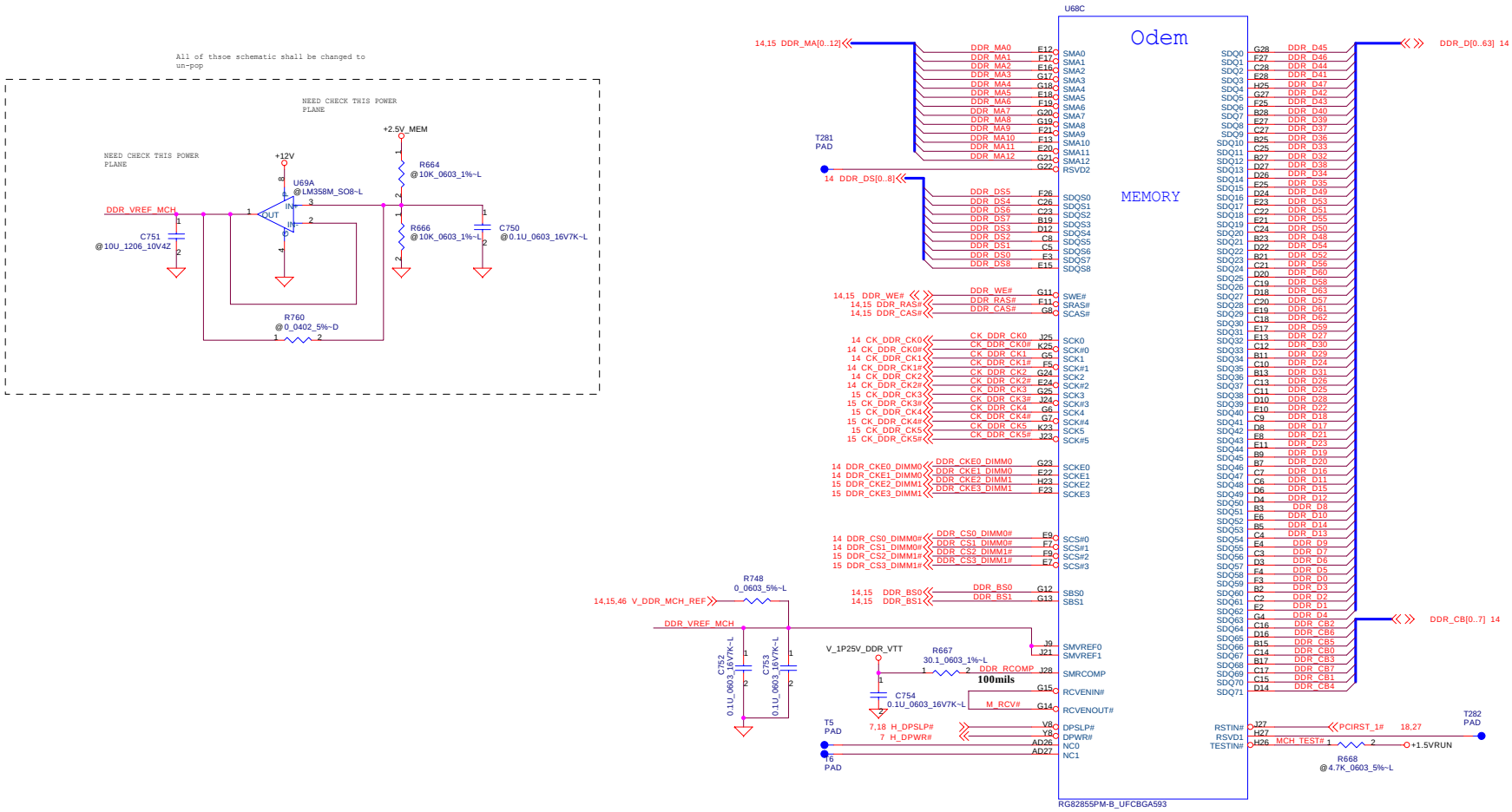

DELL CONFIDENTIAL/PROPRIETARY

Compal Electronics, Inc.

Title: Odem(2 of 3)

Size: C | Document Number: DDQ12/11/01 with LA-1901 | Rev: 1.0

Date: Thursday, July 03, 2003 | Sheet 11 of 58

THIS SHEET OF ENGINEERING DRAWING IS THE PROPRIETARY PROPERTY OF COMPAL ELECTRONICS, INC. AND CONTAINS CONFIDENTIAL AND TRADE SECRET INFORMATION. THIS SHEET MAY NOT BE TRANSFERED FROM THE CUSTODY OF THE COMPETENT DIVISION OF R&D DEPARTMENT EXCEPT AS AUTHORIZED BY COMPAL ELECTRONICS, INC. NEITHER THIS SHEET NOR THE INFORMATION IT CONTAINS MAY BE USED BY OR DISCLOSED TO ANY THIRD PARTY WITHOUT PRIOR WRITTEN CONSENT OF COMPAL ELECTRONICS, INC.

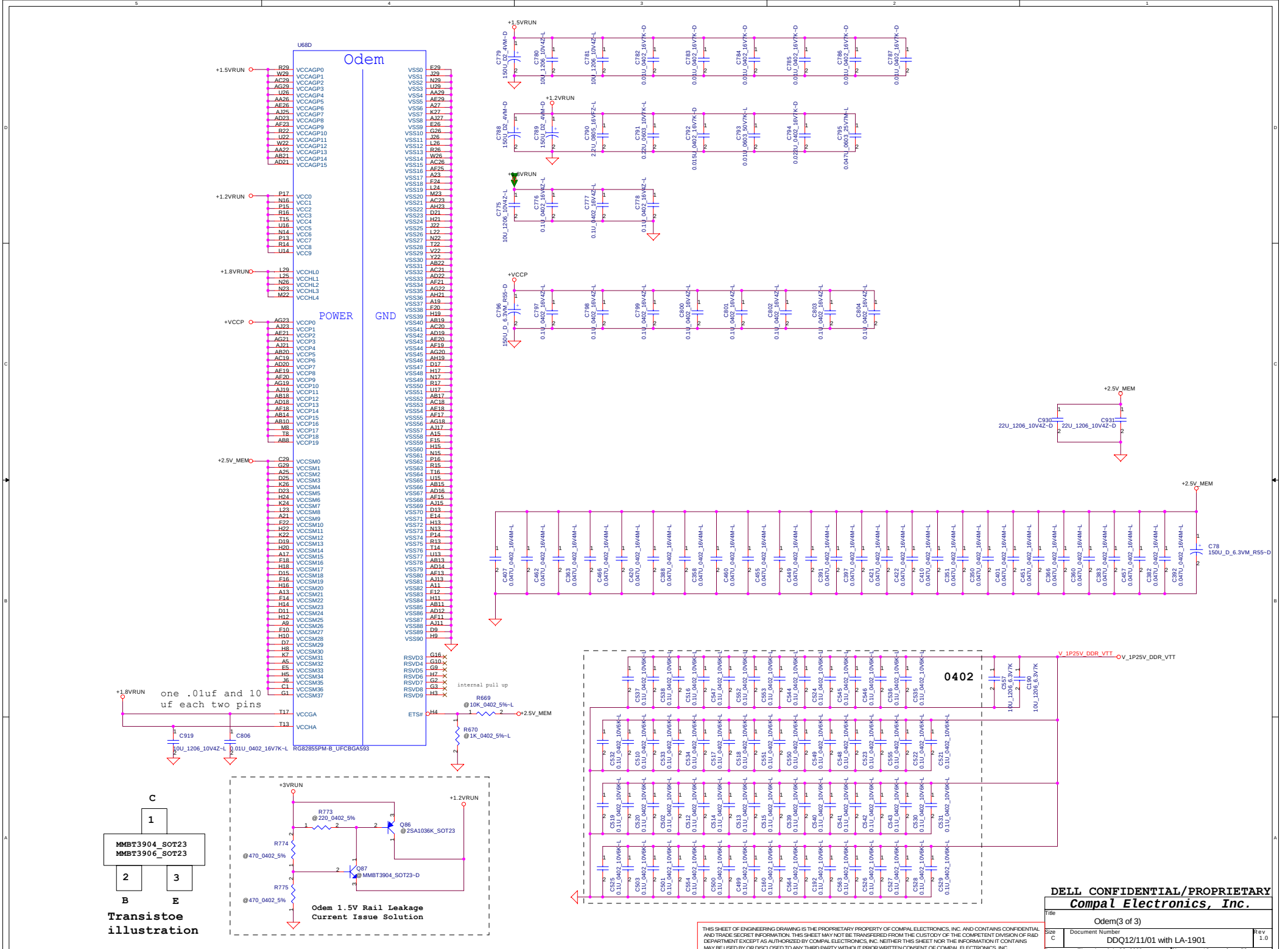

THIS SHEET OF ENGINEERING DRAWING IS THE PROPRIETARY PROPERTY OF COMPAL ELECTRONICS, INC. AND CONTAINS CONFIDENTIAL AND TRADE SECRET INFORMATION. THIS SHEET MAY NOT BE TRANSFERED FROM THE CUSTODY OF THE COMPETENT DIVISION OF R&D DEPARTMENT EXCEPT AS AUTHORIZED BY COMPAL ELECTRONICS, INC. NEITHER THIS SHEET NOR THE INFORMATION IT CONTAINS MAY BE USED BY OR DISCLOSED TO ANY THIRD PARTY WITHOUT PRIOR WRITTEN CONSENT OF COMPAL ELECTRONICS, INC.

DELL CONFIDENTIAL/PROPRIETARY

Compal Electronics, Inc.

Title	Odem(3 of 3)
Size C	Document Number DDQ12/11/01 with LA-1901
Rev	1.0
Date: Thursday, July 03, 2003	Sheet 12 of 58

FAN1 Control and Tachometer

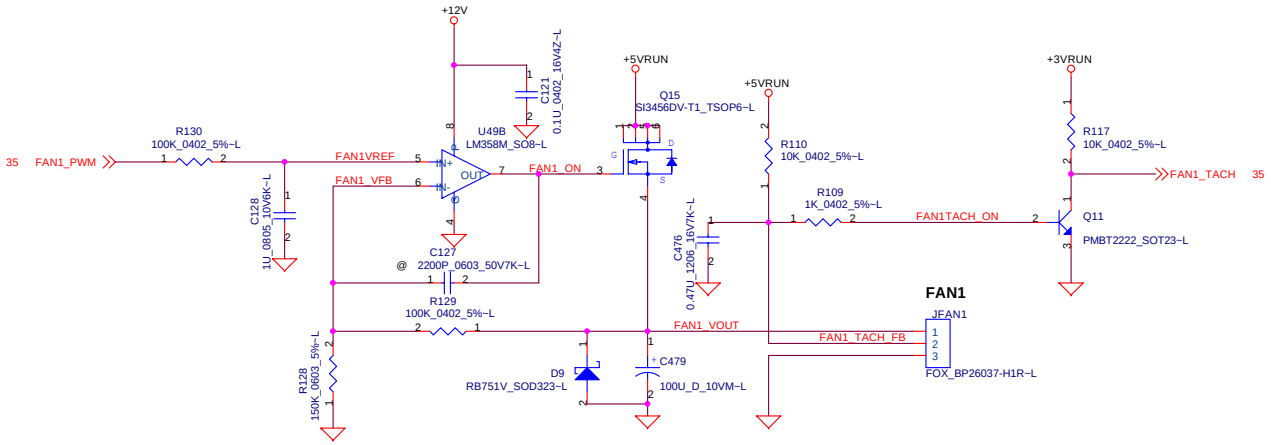

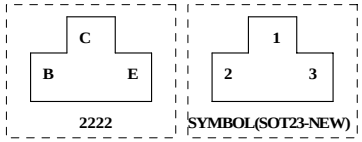

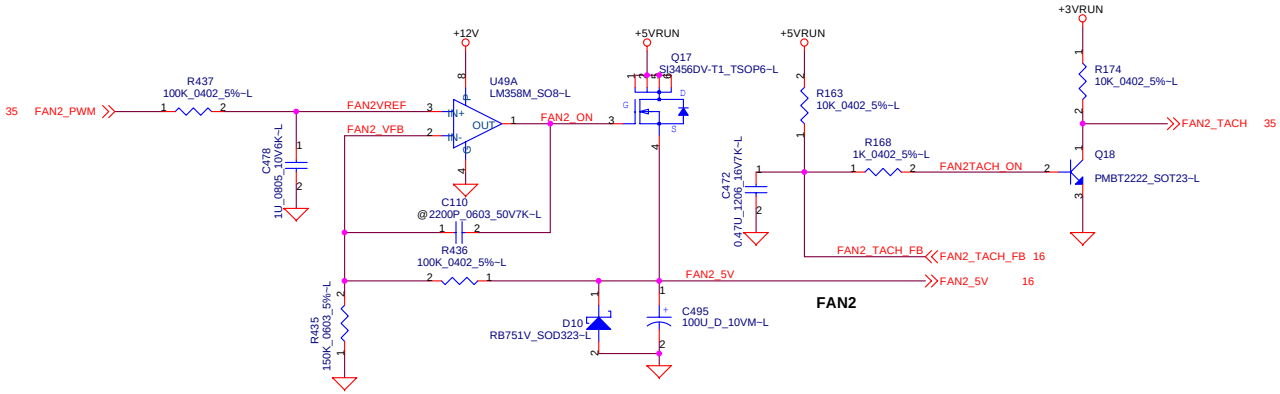

CPU Temperature Sensor

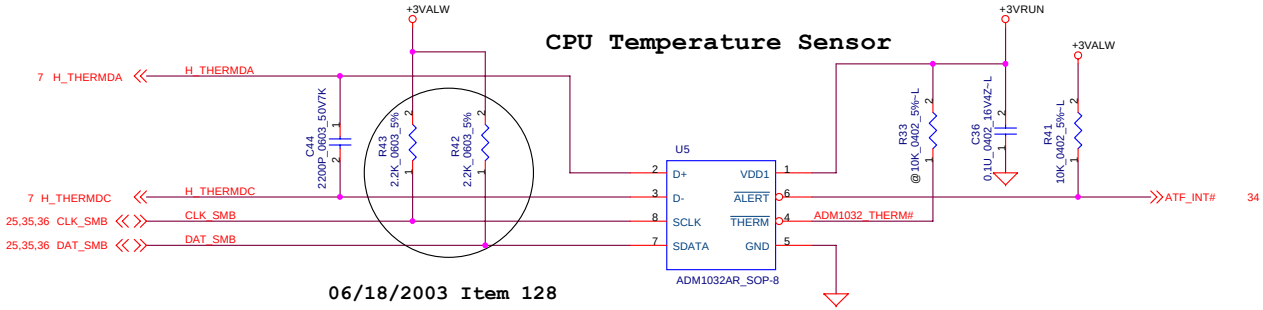

06/18/2003 Item 128

DELL CONFIDENTIAL/PROPRIETARY

Compal Electronics, Inc.		
Title: ITP Debug CONN. & FAN		
Size	Document Number: DDQ12/11/01 with LA-1901	Rev 1.0
Date: Thursday, July 03, 2003	Sheet 13 of 58	

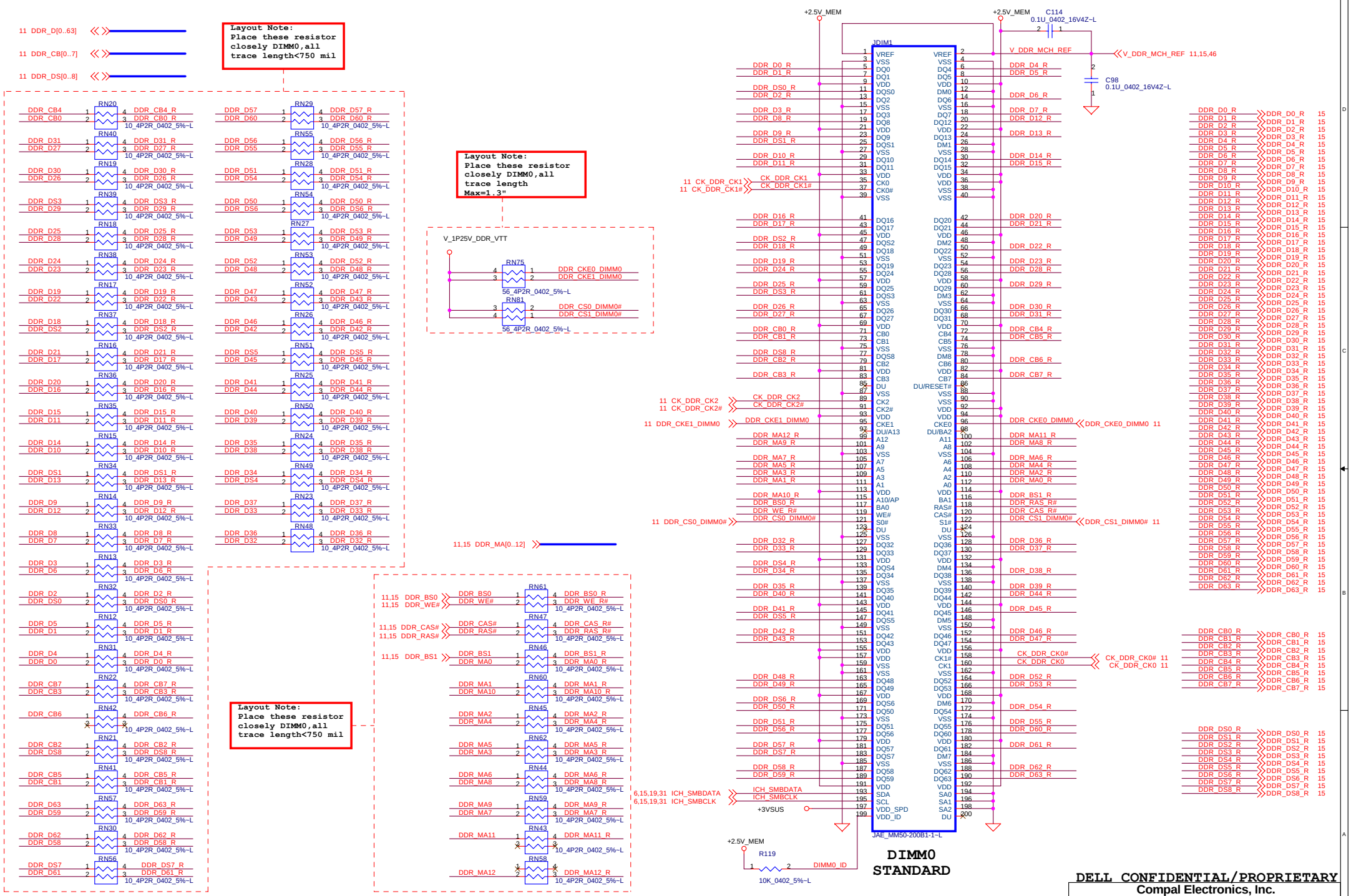

DELL CONFIDENTIAL/PROPRIETARY

Compal Electronics, Inc.

Title: DDR-SODIMM SLOT1

Size | Document Number: DDQ12/11/01 with LA-1901 | Rev 1.0

Date: Thursday, July 03, 2003 | Sheet 14 of 58

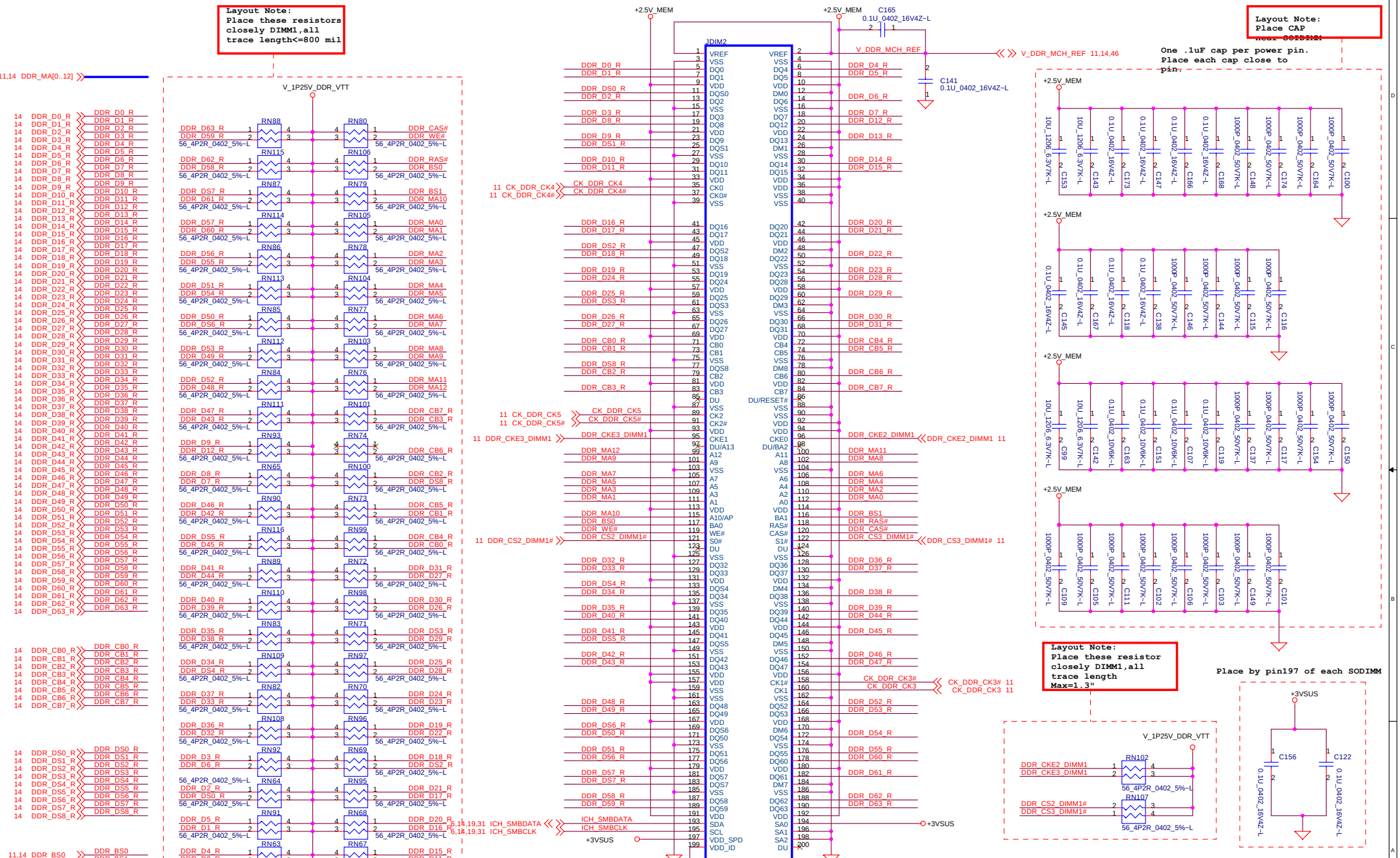
Layout Note:
Place these resistors closely DIMM1,all trace length<=800 mil
Layout Note:
Place CAP near SODIMM
One .1uF cap per power pin.
Place each cap close to pin.
Layout Note:
Place these resistor closely DIMM1,all trace length Max=1.3"
Place by pin197 of each SODIMM
JDIM2
JAE_MM50-200B1-1R~L
V_1P25V_DDR_VTT
V_DDR_MCH_REF 11,14,46
+2.5V_MEM
+3VSUS
11,14 DDR_MA[0..12]
11 CK_DDR_CK4
11 CK_DDR_CK4#
11 CK_DDR_CK5
11 CK_DDR_CK5#
11 DDR_CKE3_DIMM1
DDR_CKE2_DIMM1 11
11 DDR_CS2_DIMM1#
DDR_CS3_DIMM1# 11
CK_DDR_CK3# 11
CK_DDR_CK3 11
6,14,19,31 ICH_SMBDATA
6,14,19,31 ICH_SMBCLK
DIMM1 REVERSE
DELL CONFIDENTIAL/PROPRIETARY
Compal Electronics, Inc.
Title
DDR-SODIMM SLOT2
Size
Document Number
DDQ12/11/01 with LA-1901
Rev 1.0
Date: Thursday, July 03, 2003
Sheet 15 of 58

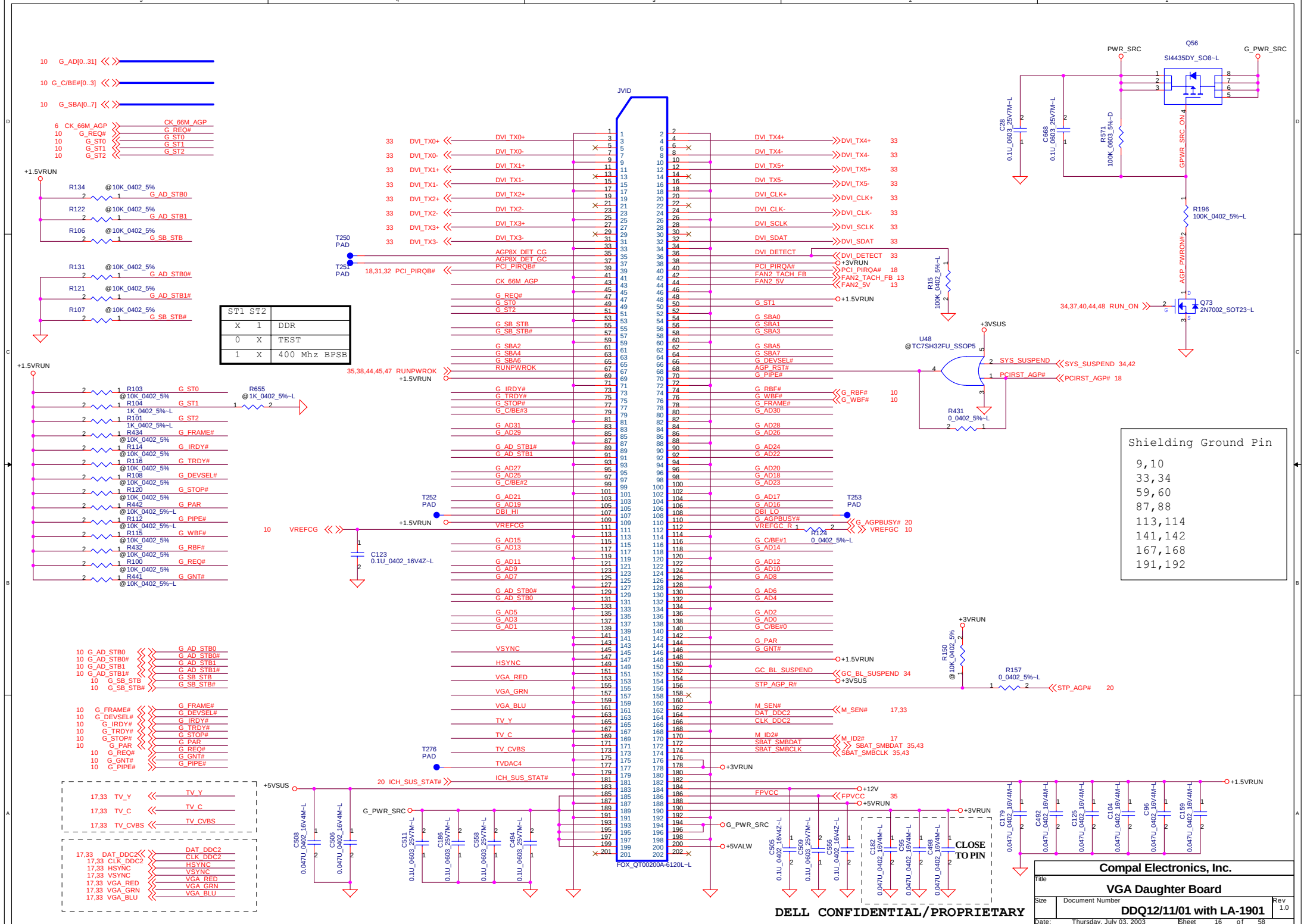
JVID
FOX_QT00200A-6120L-L
Q56
SI4435DY_SO8-L
PWR_SRC
G_PWR_SRC
Q73
2N7002_SOT23-L
U48
@TC7SH32FU_SSOP5
Shielding Ground Pin
9,10
33,34
59,60
87,88
113,114
141,142
167,168
191,192
CLOSE TO PIN
DELL CONFIDENTIAL/PROPRIETARY
Compal Electronics, Inc.
Title
VGA Daughter Board
Size
Document Number
DDQ12/11/01 with LA-1901
Rev
1.0
Date: Thursday, July 03, 2003
Sheet 16 of 58

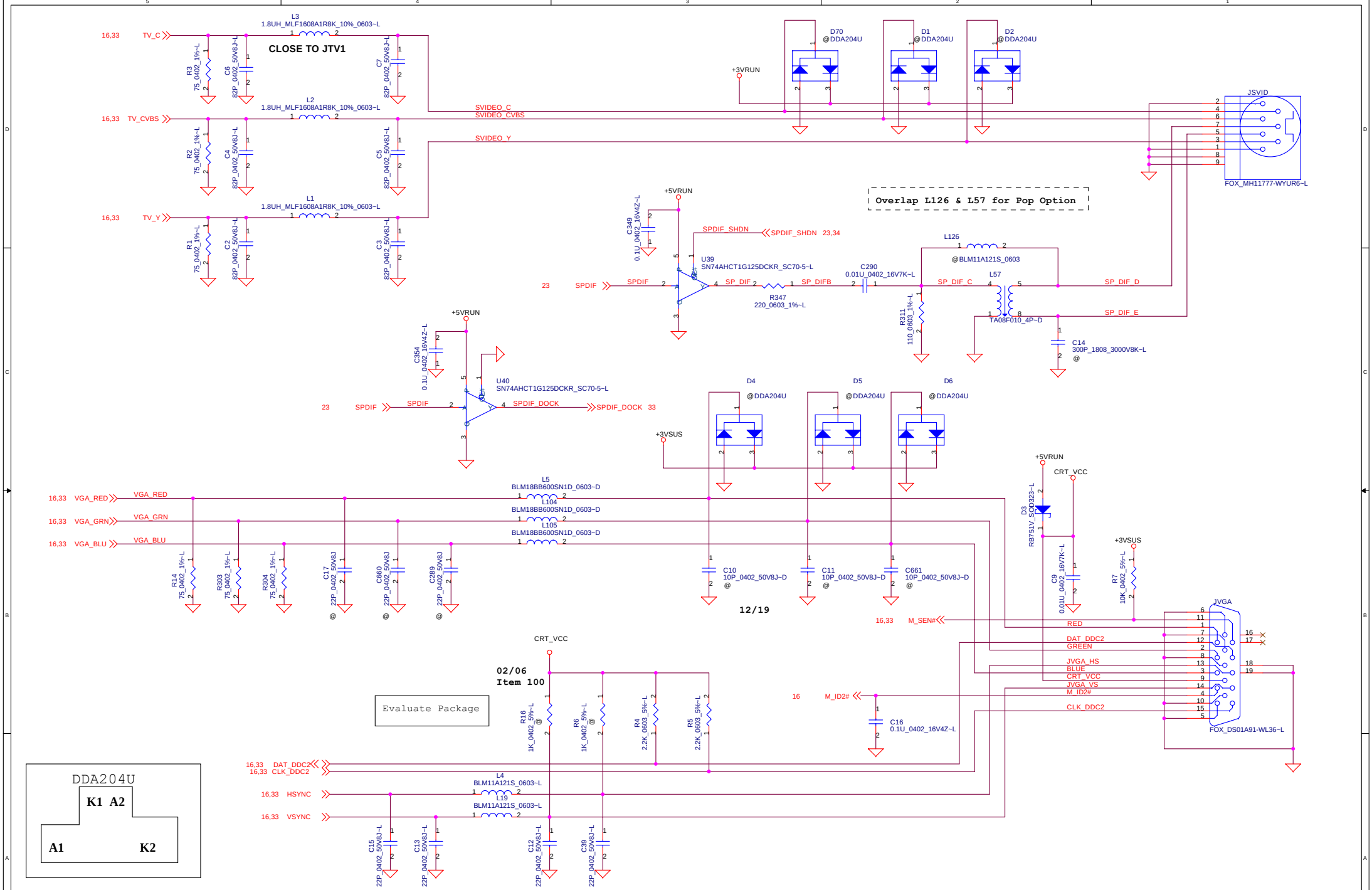

DELL CONFIDENTIAL/PROPRIETARY

Compal Electronics, Inc.

Title	TV_OUT and CRT
Size	
Document Number	DDQ12/11/01 with LA-1901
Rev	1.0
Date: Thursday, July 03, 2003	Sheet 17 of 58

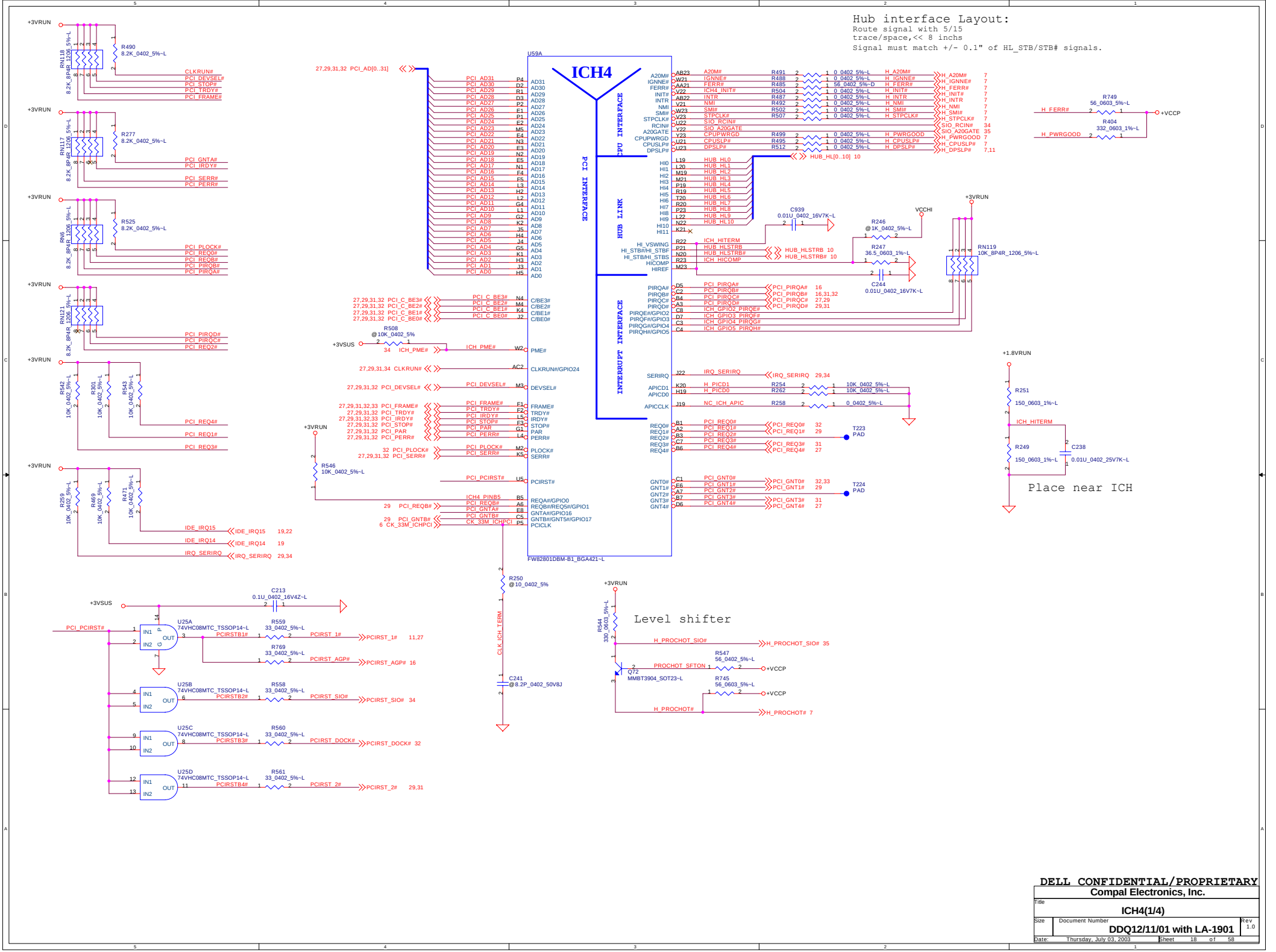

DELL CONFIDENTIAL/PROPRIETARY

Compal Electronics, Inc.

Title: ICH4(1/4)

Size | Document Number: DDQ12/11/01 with LA-1901 | Rev 1.0

Date: Thursday, July 03, 2003 | Sheet 18 of 58

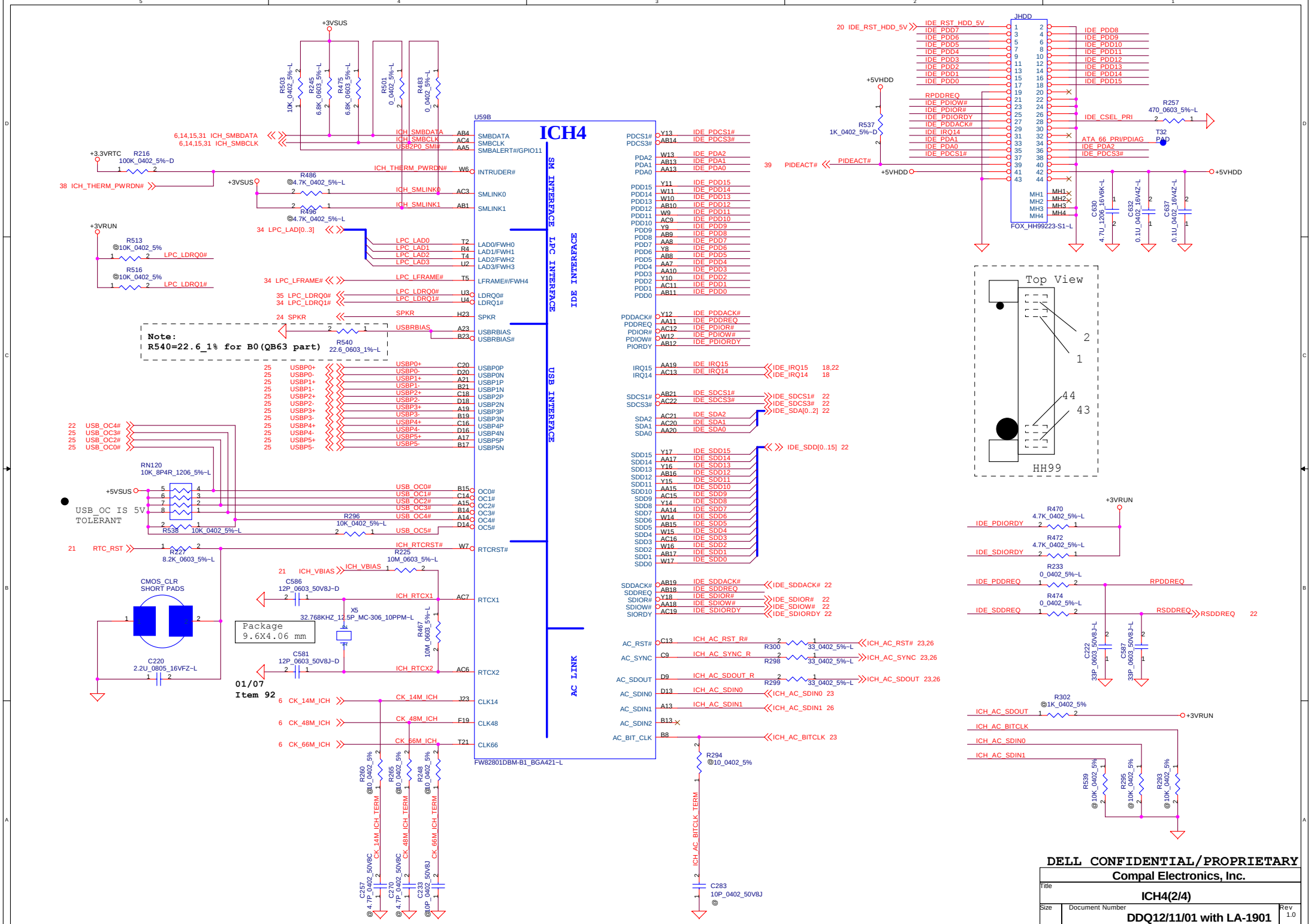
ICH4
U59B
FW82801DBM-B1_BGA421-L
SM INTERFACE
LPC INTERFACE
IDE INTERFACE
USB INTERFACE
AC LINK
JHDD
FOX_HH99223-S1-L
Top View
HH99
Note:
R540=22.6_1% for B0(QB63 part)
USB_OC IS 5V TOLERANT
CMOS_CLR SHORT PADS
Package 9.6X4.06 mm
01/07
Item 92
DELL CONFIDENTIAL/PROPRIETARY
Compal Electronics, Inc.
Title
ICH4(2/4)
Size
Document Number
DDQ12/11/01 with LA-1901
Rev 1.0
Date: Thursday, July 03, 2003
Sheet 19 of 58

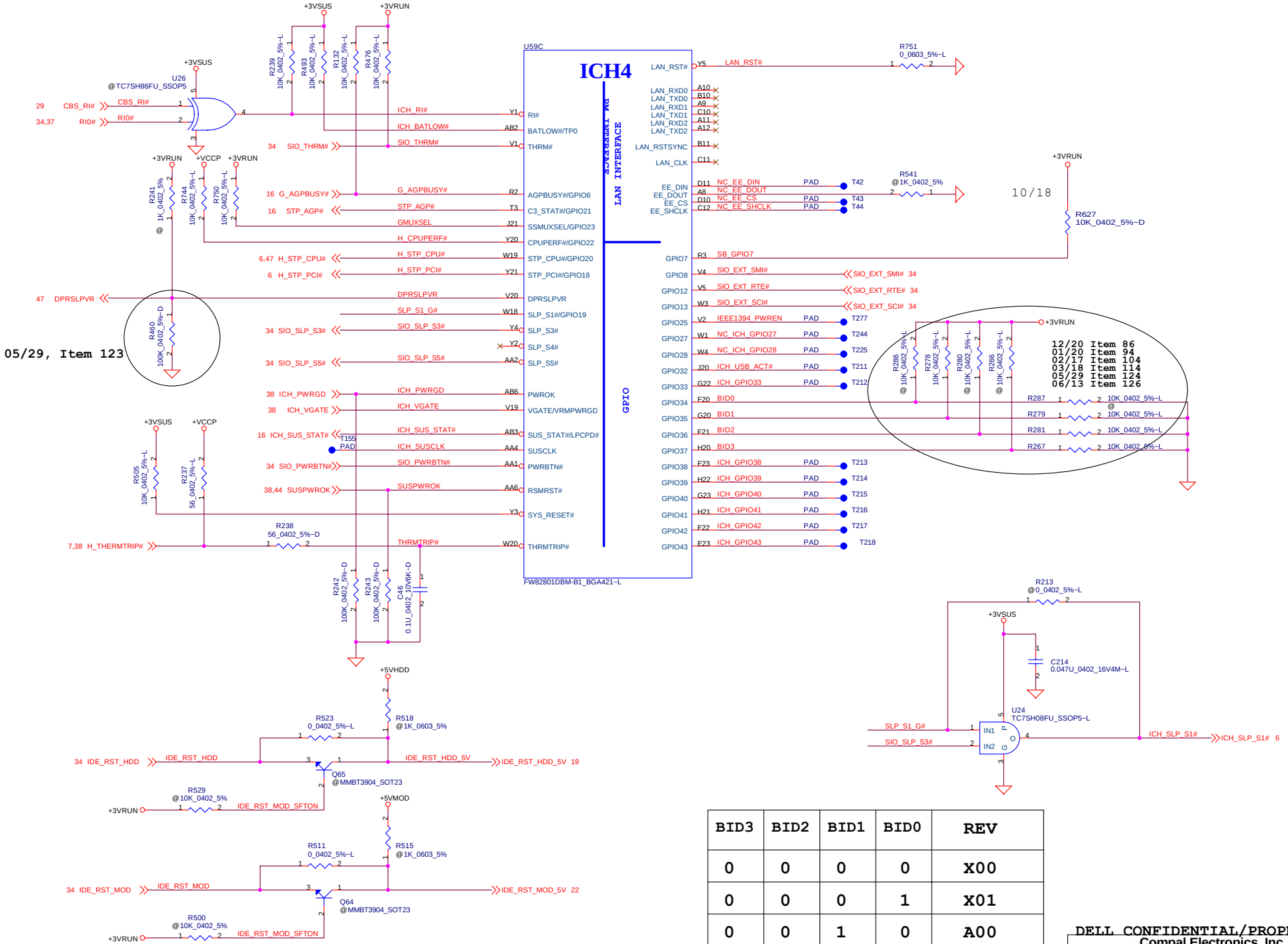

BID3	BID2	BID1	BID0	REV
0	0	0	0	X00
0	0	0	1	X01
0	0	1	0	A00

DELL CONFIDENTIAL/PROPRIETARY

Compal Electronics, Inc.

Title: ICH4(3/4)

Size | Document Number: DDQ12/11/01 with LA-1901 | Rev 1.0

Date: Thursday, July 03, 2003 | Sheet 20 of 58

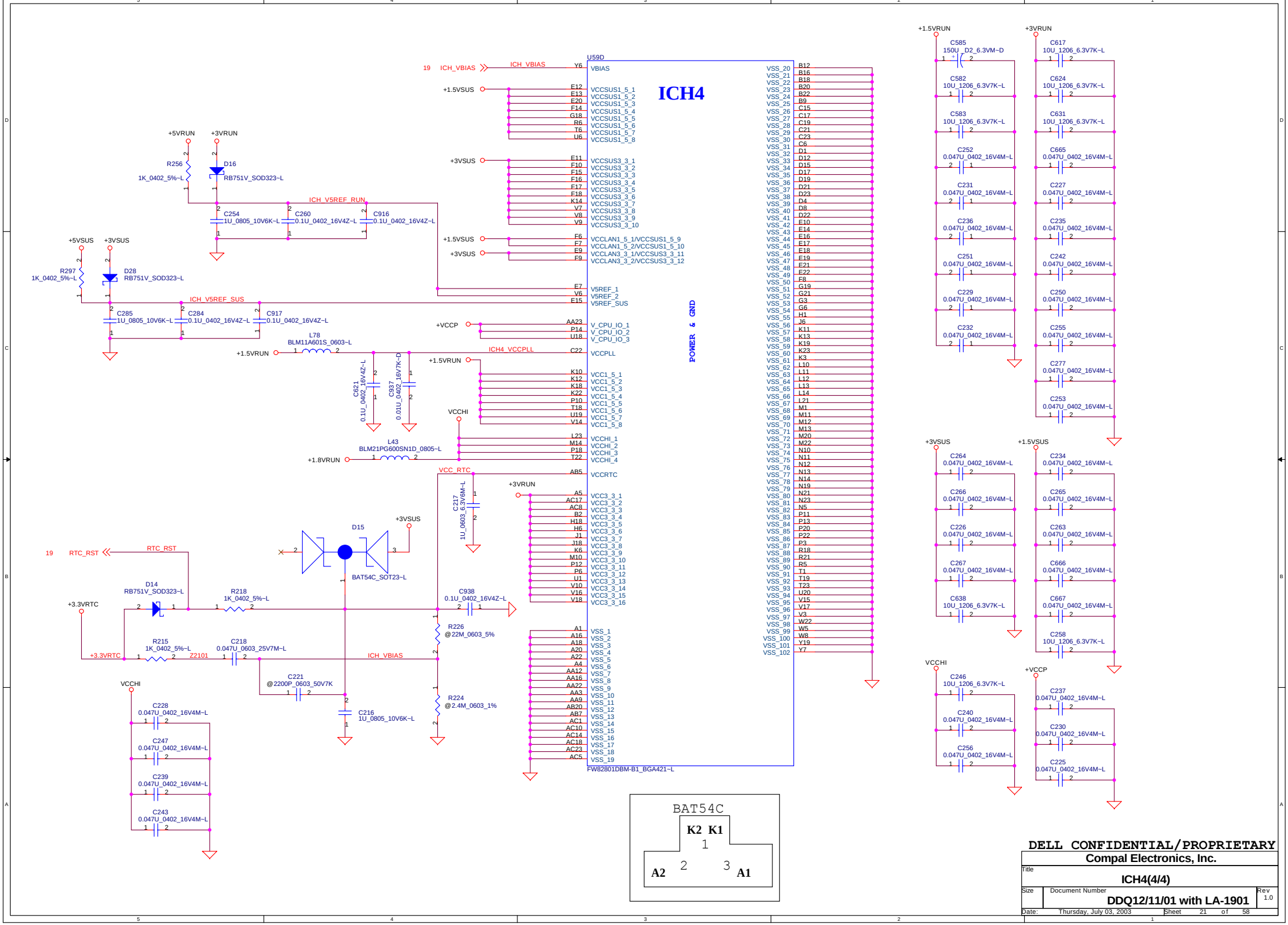

DELL CONFIDENTIAL/PROPRIETARY

Compal Electronics, Inc.

Title	ICH4(4/4)	
Size	Document Number: DDQ12/11/01 with LA-1901	Rev 1.0
Date: Thursday, July 03, 2003	Sheet 21 of 58	

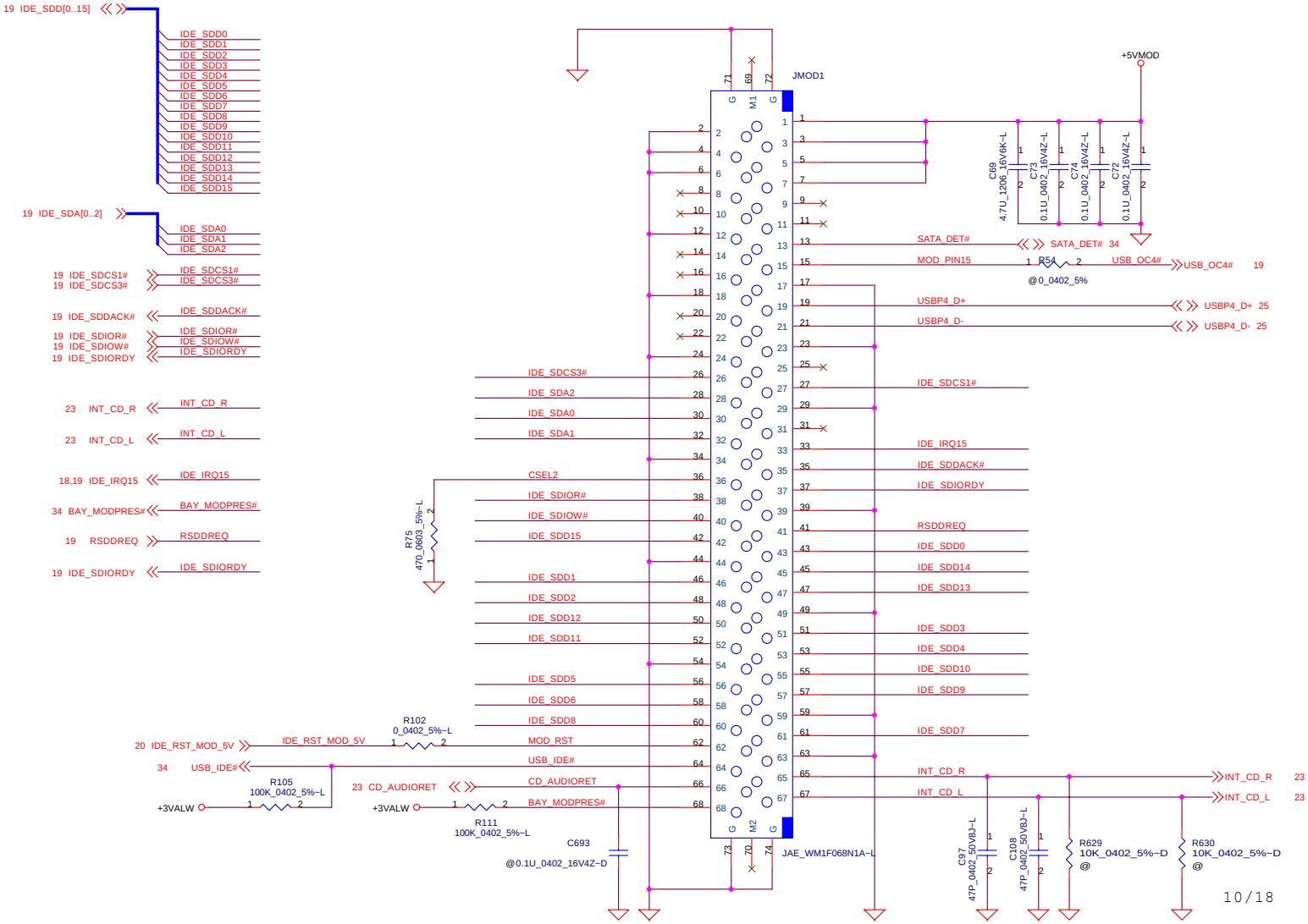

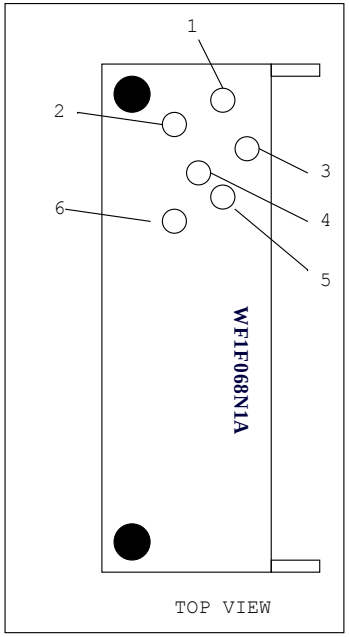

DELL CONFIDENTIAL/PROPRIETARY

Compal Electronics, Inc.

Title	DVD MODULE	
Size	Document Number: DDQ12/11/01 with LA-1901	Rev 1.0
Date: Thursday, July 03, 2003	Sheet 22 of 58	

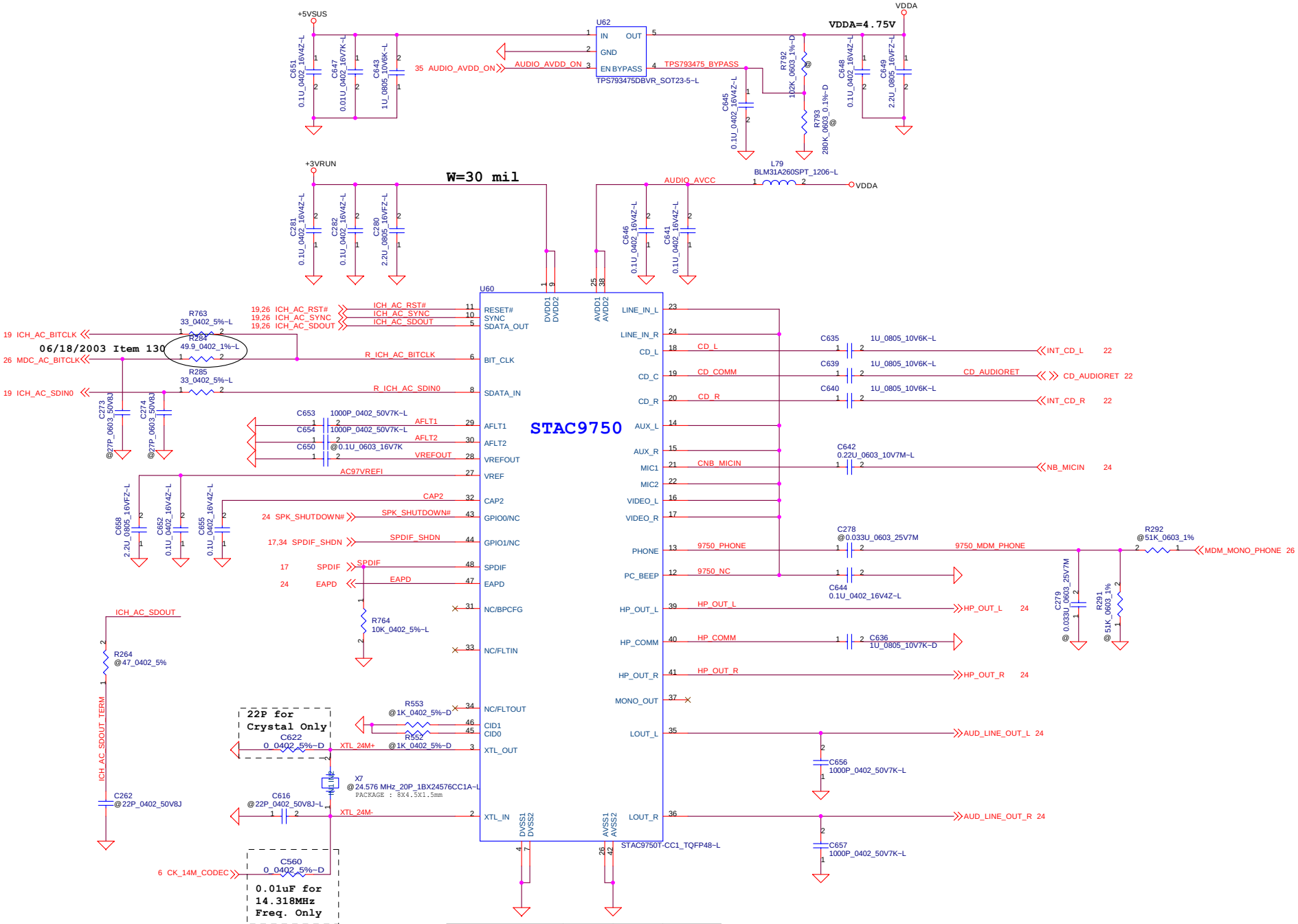

CLOCK SOURCE	Pin46 CID1	Pin45 CID0	Pin3 XTL_OUT
14.318 MHz	OPEN	OPEN	GND
27 MHz	OPEN	1K	GND
48 MHz	1K	OPEN	GND
24.576 MHz	1K	1K	GND

DELL CONFIDENTIAL/PROPRIETARY

Compal Electronics, Inc.

Title: AC97

Size | Document Number: DDQ12/11/01 with LA-1901 | Rev 1.0

Date: Thursday, July 03, 2003 | Sheet 23 of 58

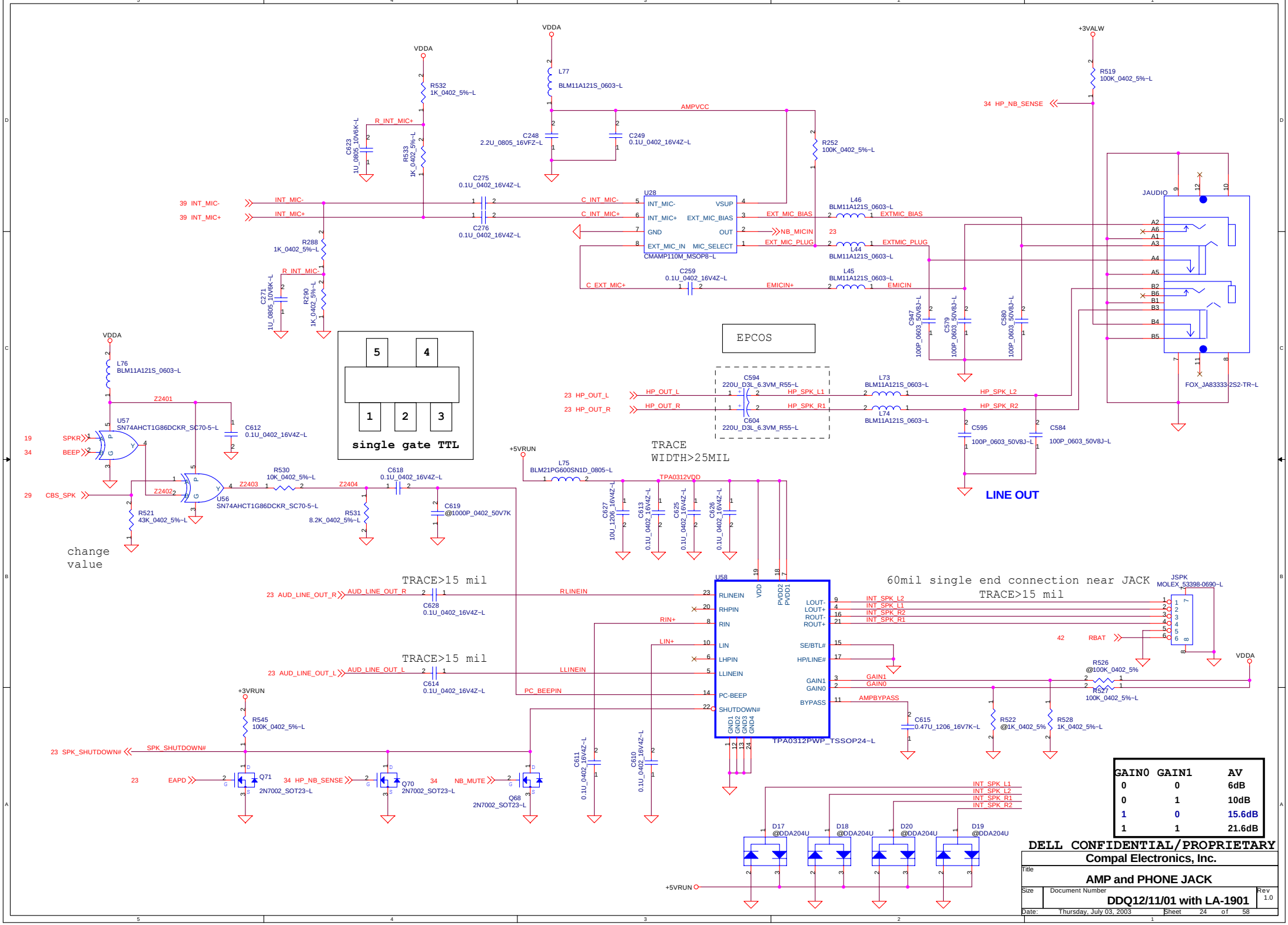

GAIN0	GAIN1	AV
0	0	6dB
0	1	10dB
1	0	15.6dB
1	1	21.6dB

DELL CONFIDENTIAL/PROPRIETARY

Compal Electronics, Inc.

Title: AMP and PHONE JACK

Size | Document Number: DDQ12/11/01 with LA-1901 | Rev 1.0

Date: Thursday, July 03, 2003 | Sheet 24 of 58

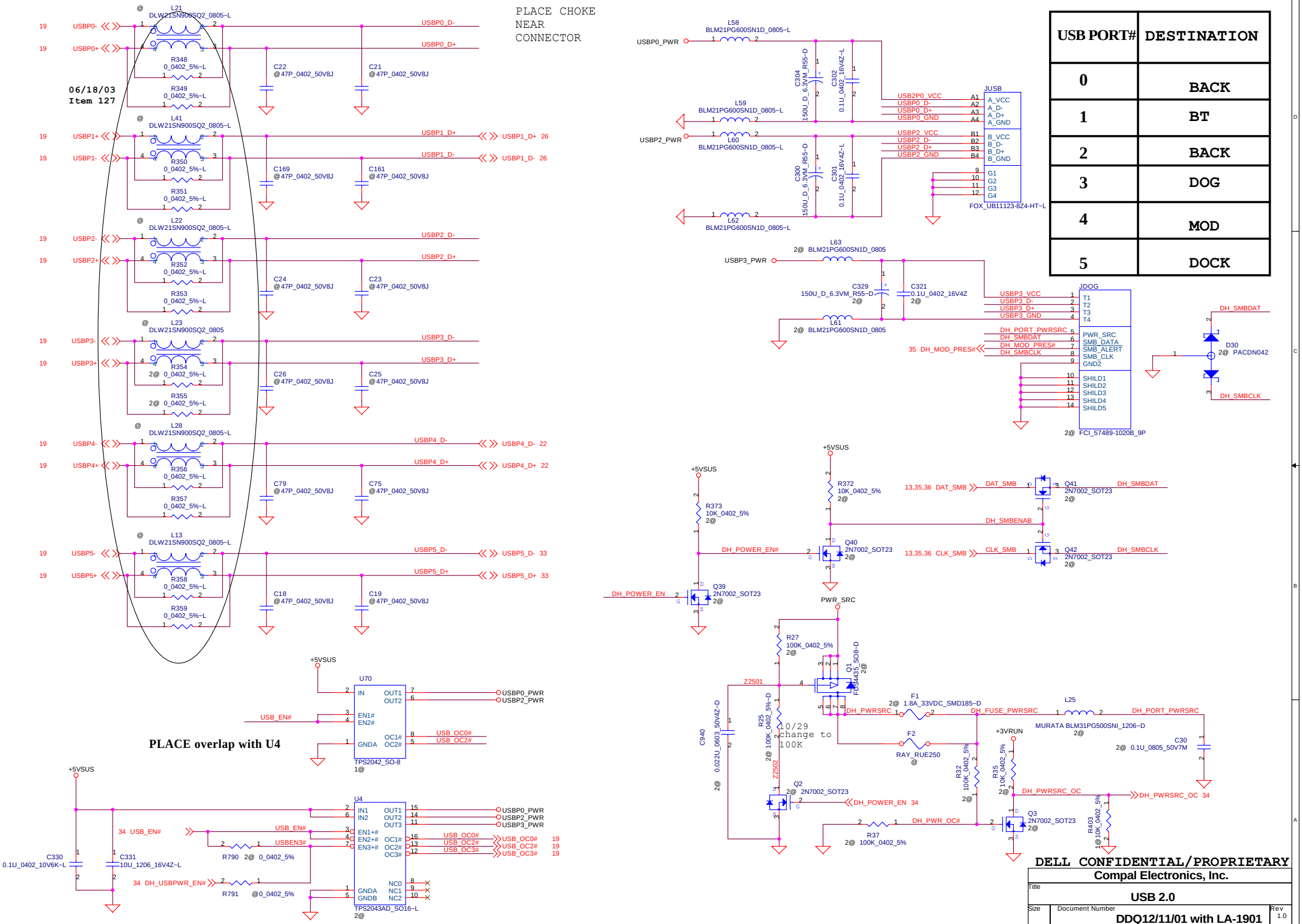

USB PORT#	DESTINATION
0	BACK
1	BT
2	BACK
3	DOG
4	MOD
5	DOCK

DELL CONFIDENTIAL/PROPRIETARY

Compal Electronics, Inc.

Title: USB 2.0

Size | Document Number: DDQ12/11/01 with LA-1901 | Rev 1.0

Date: Thursday, July 03, 2003 | Sheet 25 of 58

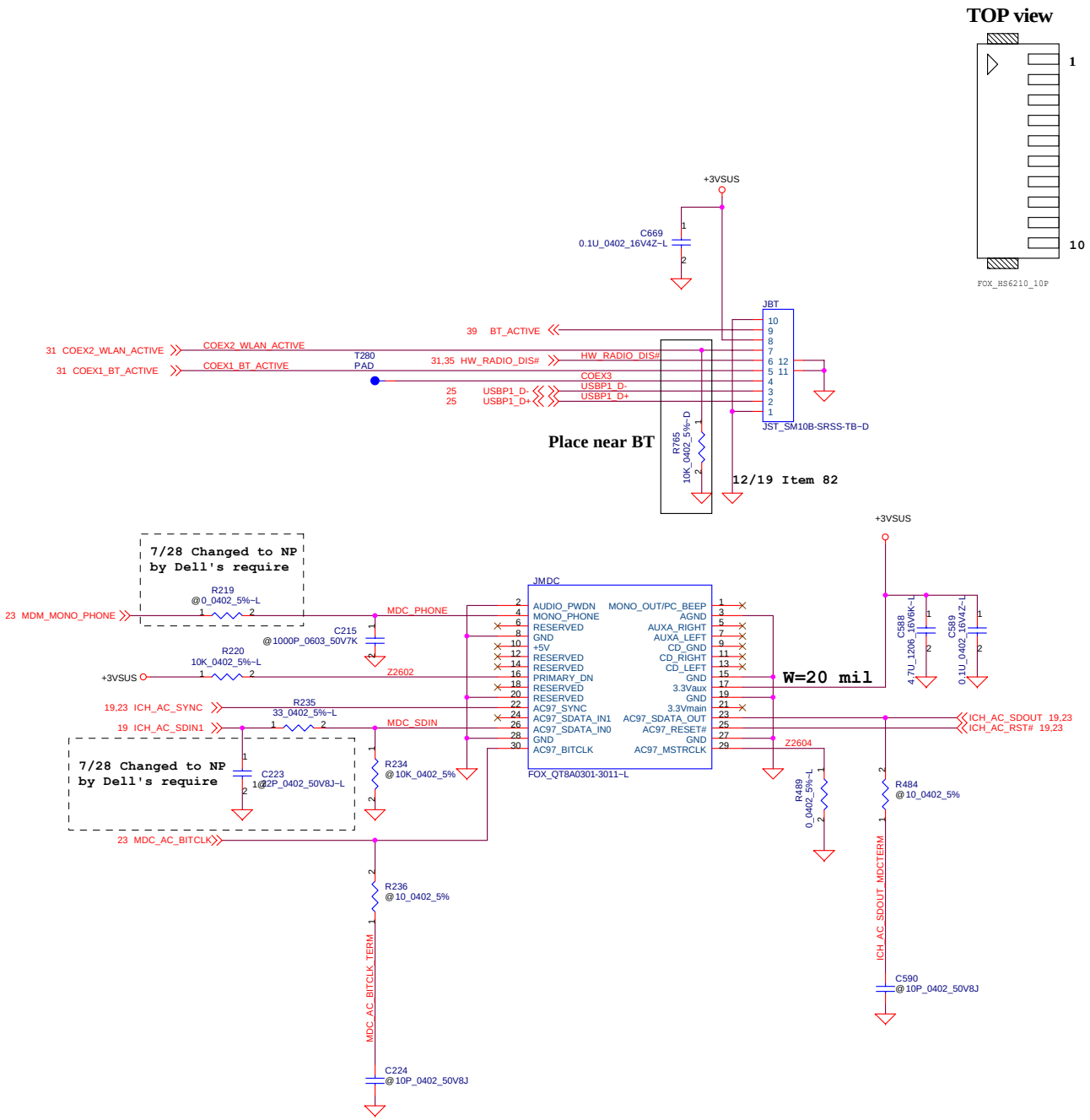

DELL CONFIDENTIAL/PROPRIETARY

Compal Electronics, Inc.

Title	**BT PORT and MDC**	
Size	Document Number **DDQ12/11/01 with LA-1901**	Rev 1.0
Date: Thursday, July 03, 2003	Sheet 26 of 58	

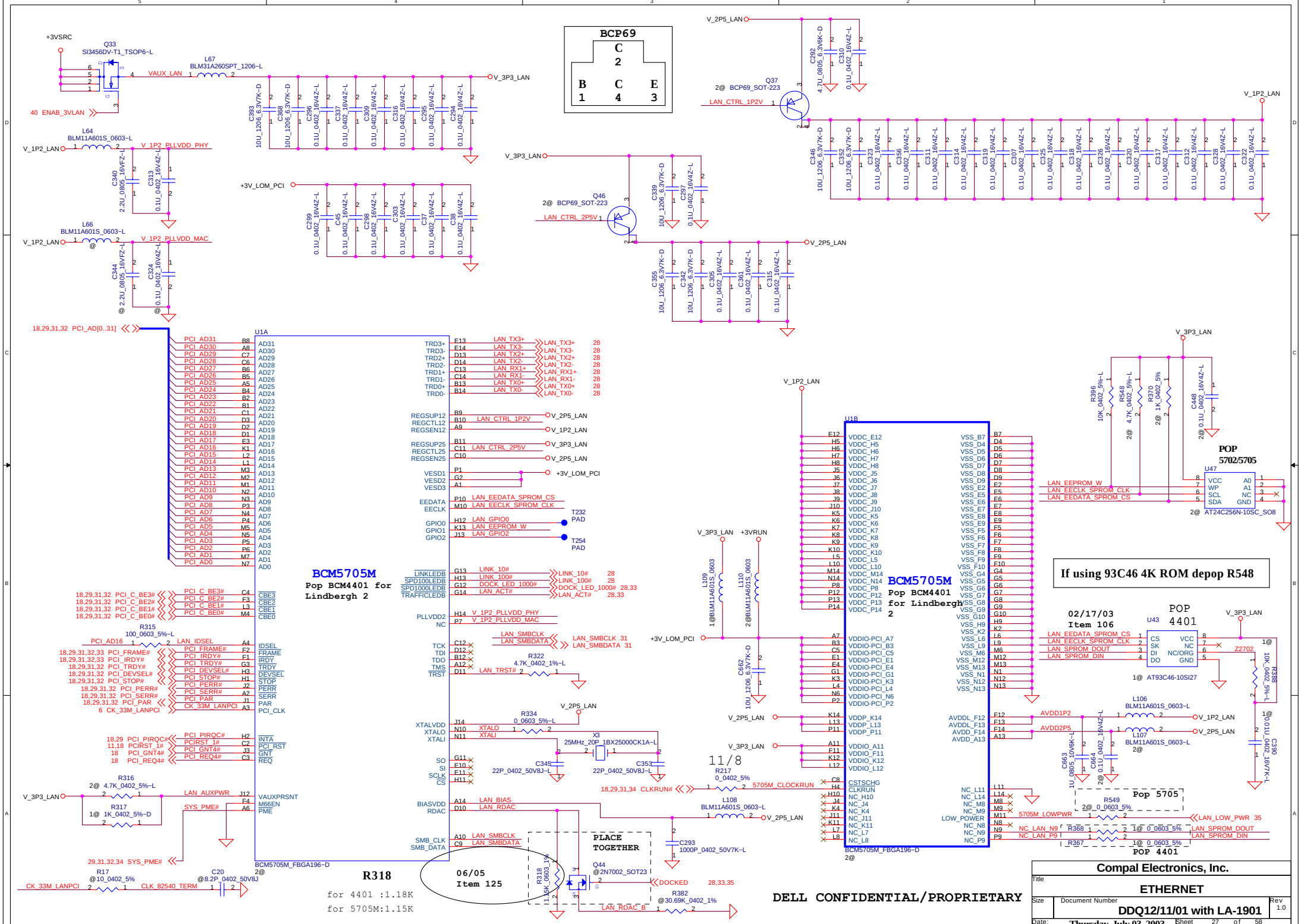
BCP69
C
2
B C E
1 4 3
Q33
SI3456DV-T1_TSOP6-L
+3VSRC
40 ENAB_3VLAN
L67
BLM31A260SPT_1206-L
VAUX_LAN
V_3P3_LAN
L64
BLM11A601S_0603-L
V_1P2_LAN
V_1P2_PLLVDD_PHY
L66
BLM11A601S_0603-L
V_1P2_PLLVDD_MAC
+3V_LOM_PCI
Q37
2@ BCP69_SOT-223
LAN_CTRL_1P2V
Q46
2@ BCP69_SOT-223
LAN_CTRL_2P5V
V_2P5_LAN
18,29,31,32 PCI_AD[0..31]
U1A
BCM5705M
Pop BCM4401 for Lindbergh 2
BCM5705M_FBGA196-D
2@
LAN_TX3+
LAN_TX3-
LAN_TX2+
LAN_TX2-
LAN_RX1+
LAN_RX1-
LAN_TX0+
LAN_TX0-
LAN_CTRL_1P2V
LAN_CTRL_2P5V
LAN_EEDATA_SPROM_CS
LAN_EECLK_SPROM_CLK
LAN_GPIO0
LAN_EEPROM_W
LAN_GPIO2
T232
PAD
T254
PAD
LINK_10#
LINK_100#
DOCK_LED_1000#
LAN_ACT#
V_1P2_PLLVDD_PHY
V_1P2_PLLVDD_MAC
LAN_SMBCLK
LAN_SMBDATA
LAN_TRST#
LAN_IDSEL
LAN_AUXPWR
SYS_PME#
LAN_BIAS
LAN_RDAC
PCI_C_BE3#
PCI_C_BE2#
PCI_C_BE1#
PCI_C_BE0#
PCI_FRAME#
PCI_IRDY#
PCI_TRDY#
PCI_DEVSEL#
PCI_STOP#
PCI_PERR#
PCI_SERR#
PCI_PAR
CK_33M_LANPCI
PCI_PIRQC#
PCIRST_1#
PCI_GNT4#
PCI_REQ4#
R315
100_0603_5%-L
PCI_AD16
R316
2@ 4.7K_0402_5%-L
R317
1@ 1K_0402_5%-D
R334
0_0603_5%-L
X3
25MHz_20P_1BX25000CK1A-L
C345
22P_0402_50V8J-L
C353
22P_0402_50V8J-L
R322
4.7K_0402_1%-L
R217
0_0402_5%
5705M_CLOCKRUN
18,29,31,34 CLKRUN#
L108
BLM11A601S_0603-L
C293
1000P_0402_50V7K-L
R318
11.5K_0603_1%
Q44
@2N7002_SOT23
DOCKED
28,33,35
R382
@30.69K_0402_1%
LAN_RDAC_B
PLACE TOGETHER
R17
@10_0402_5%
C20
@8.2P_0402_50V8J
CLK_82540_TERM
R318
for 4401 :1.18K
for 5705M:1.15K
06/05
Item 125
U1B
BCM5705M
Pop BCM4401 for Lindbergh 2
BCM5705M_FBGA196-D
2@
L109
1@BLM11A601S_0603
L110
2@BLM11A601S_0603
C662
10U_1206_6.3V7K-D
11/8
POP
5702/5705
U47
AT24C256N-10SC_SO8
LAN_EEPROM_W
LAN_EECLK_SPROM_CLK
LAN_EEDATA_SPROM_CS
R396
10K_0402_5%-L
R549
4.7K_0402_5%-L
R370
2@ 1K_0402_5%
C448
2@ 0.1U_0402_16V4Z-L
If using 93C46 4K ROM depop R548
02/17/03
Item 106
POP
4401
U43
AT93C46-10SI27
LAN_EEDATA_SPROM_CS
LAN_EECLK_SPROM_CLK
LAN_SPROM_DOUT
LAN_SPROM_DIN
Z2702
R388
10K_0402_5%-L
L106
BLM11A601S_0603-L
L107
BLM11A601S_0603-L
2@
C390
0.01U_0402_16V7K-L
C663
1U_0805_10V6K-L
C664
2@ 0.1U_0402_16V4Z-L
Pop 5705
R549
2@ 0_0603_5%
5705M_LOWPWR
LAN_LOW_PWR
35
R368
1@ 0_0603_5%
LAN_SPROM_DOUT
R367
1@ 0_0603_5%
LAN_SPROM_DIN
POP 4401
DELL CONFIDENTIAL/PROPRIETARY
Compal Electronics, Inc.
Title
ETHERNET
Size
Document Number
DDQ12/11/01 with LA-1901
Rev
1.0
Date:
Thursday, July 03, 2003
Sheet 27 of 58

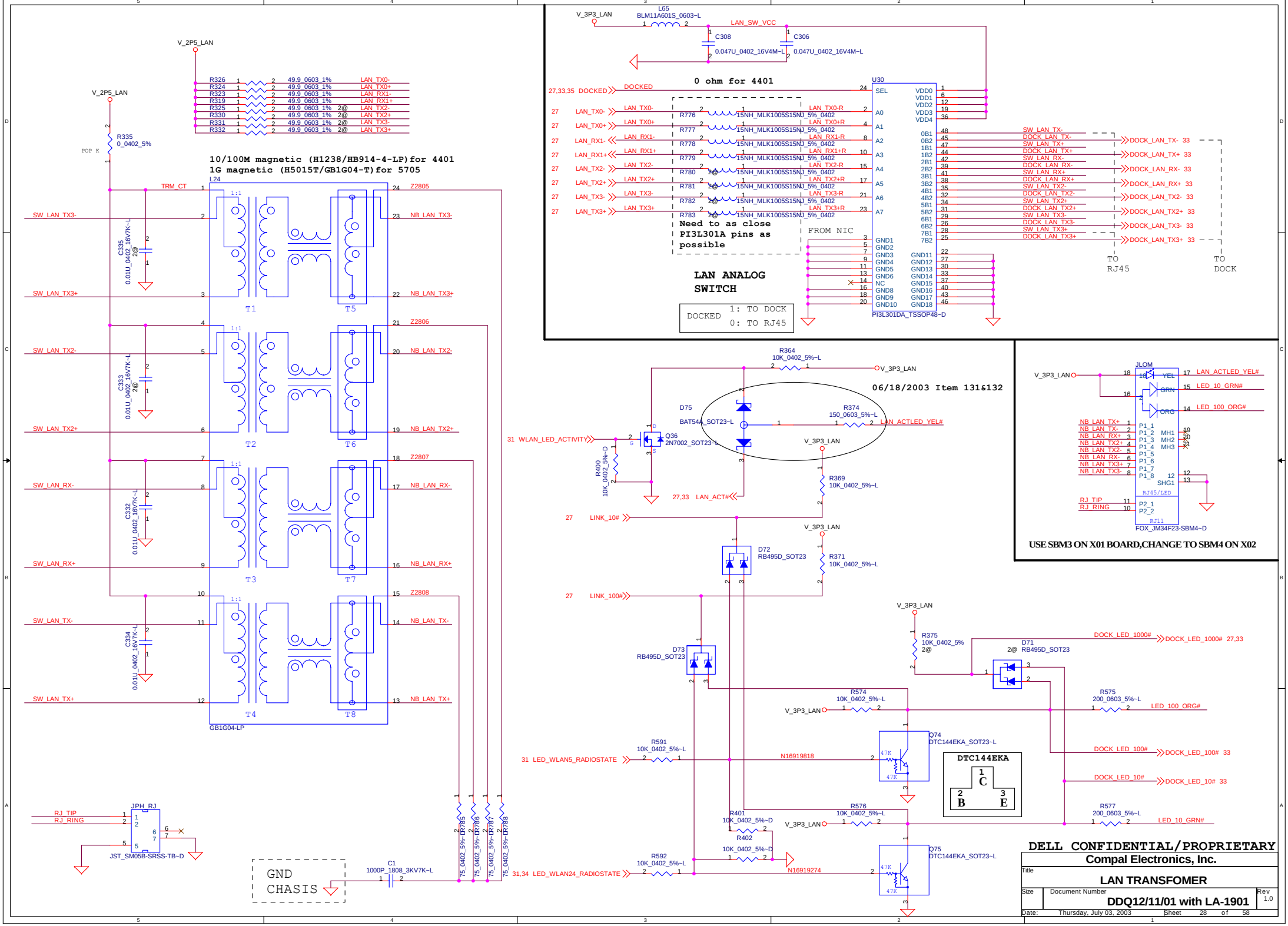
V_2P5_LAN
R326 49.9_0603_1% LAN_TX0-
R324 49.9_0603_1% LAN_TX0+
R323 49.9_0603_1% LAN_RX1-
R319 49.9_0603_1% LAN_RX1+
R325 49.9_0603_1% 2@ LAN_TX2-
R330 49.9_0603_1% 2@ LAN_TX2+
R331 49.9_0603_1% 2@ LAN_TX3-
R332 49.9_0603_1% 2@ LAN_TX3+
R335 0_0402_5%
POP K
10/100M magnetic (H1238/HB914-4-LP)for 4401
1G magnetic (H5015T/GB1G04-T)for 5705
L24
TRM_CT
SW_LAN_TX3-
SW_LAN_TX3+
SW_LAN_TX2-
SW_LAN_TX2+
SW_LAN_RX-
SW_LAN_RX+
SW_LAN_TX-
SW_LAN_TX+
NB_LAN_TX3-
NB_LAN_TX3+
NB_LAN_TX2-
NB_LAN_TX2+
NB_LAN_RX-
NB_LAN_RX+
NB_LAN_TX-
NB_LAN_TX+
Z2805
Z2806
Z2807
Z2808
C335 0.01U_0402_16V7K-L 2@
C333 0.01U_0402_16V7K-L 2@
C332 0.01U_0402_16V7K-L
C334 0.01U_0402_16V7K-L
T1
T2
T3
T4
T5
T6
T7
T8
GB1G04-LP
JPH_RJ
RJ_TIP
RJ_RING
JST_SM05B-SRSS-TB-D
GND
CHASIS
C1 1000P_1808_3KV7K-L
75_0402_5%-D785
75_0402_5%-D786
75_0402_5%-D787
75_0402_5%-D788
V_3P3_LAN
L65 BLM11A601S_0603-L
LAN_SW_VCC
C308 0.047U_0402_16V4M-L
C306 0.047U_0402_16V4M-L
0 ohm for 4401
27,33,35 DOCKED
DOCKED
27 LAN_TX0-
27 LAN_TX0+
27 LAN_RX1-
27 LAN_RX1+
27 LAN_TX2-
27 LAN_TX2+
27 LAN_TX3-
27 LAN_TX3+
R776 15NH_MLK1005S15NJ_5%_0402
R777 15NH_MLK1005S15NJ_5%_0402
R778 15NH_MLK1005S15NJ_5%_0402
R779 15NH_MLK1005S15NJ_5%_0402
R780 2@ 15NH_MLK1005S15NJ_5%_0402
R781 2@ 15NH_MLK1005S15NJ_5%_0402
R782 2@ 15NH_MLK1005S15NJ_5%_0402
R783 2@ 15NH_MLK1005S15NJ_5%_0402
LAN_TX0-R
LAN_TX0+R
LAN_RX1-R
LAN_RX1+R
LAN_TX2-R
LAN_TX2+R
LAN_TX3-R
LAN_TX3+R
Need to as close PI3L301A pins as possible
FROM NIC
U30
SEL
A0
A1
A2
A3
A4
A5
A6
A7
VDD0
VDD1
VDD2
VDD3
VDD4
0B1
0B2
1B1
1B2
2B1
2B2
3B1
3B2
4B1
4B2
5B1
5B2
6B1
6B2
7B1
7B2
GND1
GND2
GND3
GND4
GND5
GND6
NC
GND8
GND9
GND10
GND11
GND12
GND13
GND14
GND15
GND16
GND17
GND18
PI3L301DA_TSSOP48-D
SW_LAN_TX-
DOCK_LAN_TX-
SW_LAN_TX+
DOCK_LAN_TX+
SW_LAN_RX-
DOCK_LAN_RX-
SW_LAN_RX+
DOCK_LAN_RX+
SW_LAN_TX2-
DOCK_LAN_TX2-
SW_LAN_TX2+
DOCK_LAN_TX2+
SW_LAN_TX3-
DOCK_LAN_TX3-
SW_LAN_TX3+
DOCK_LAN_TX3+
DOCK_LAN_TX- 33
DOCK_LAN_TX+ 33
DOCK_LAN_RX- 33
DOCK_LAN_RX+ 33
DOCK_LAN_TX2- 33
DOCK_LAN_TX2+ 33
DOCK_LAN_TX3- 33
DOCK_LAN_TX3+ 33
TO RJ45
TO DOCK
LAN ANALOG SWITCH
DOCKED 1: TO DOCK 0: TO RJ45
R364 10K_0402_5%-L
V_3P3_LAN
06/18/2003 Item 131&132
D75 BAT54A_SOT23-L
R374 150_0603_5%-L
LAN_ACTLED_YEL#
31 WLAN_LED_ACTIVITY
Q36 2N7002_SOT23-L
R400 10K_0402_5%-D
27,33 LAN_ACT#
R369 10K_0402_5%-L
27 LINK_10#
D72 RB495D_SOT23
R371 10K_0402_5%-L
27 LINK_100#
D73 RB495D_SOT23
R375 10K_0402_5% 2@
D71 2@ RB495D_SOT23
DOCK_LED_1000#
DOCK_LED_1000# 27,33
R574 10K_0402_5%-L
R575 200_0603_5%-L
LED_100_ORG#
Q74 DTC144EKA_SOT23-L
DTC144EKA
R591 10K_0402_5%-L
31 LED_WLAN5_RADIOSTATE
N16919818
DOCK_LED_100#
DOCK_LED_100# 33
DOCK_LED_10#
DOCK_LED_10# 33
R401 10K_0402_5%-D
R402 10K_0402_5%-D
R576 10K_0402_5%-L
R577 200_0603_5%-L
LED_10_GRN#
R592 10K_0402_5%-L
31,34 LED_WLAN24_RADIOSTATE
N16919274
Q75 DTC144EKA_SOT23-L
JLOM
LAN_ACTLED_YEL#
LED_10_GRN#
LED_100_ORG#
YEL
GRN
ORG
NB_LAN_TX+
NB_LAN_TX-
NB_LAN_RX+
NB_LAN_TX2+
NB_LAN_TX2-
NB_LAN_RX-
NB_LAN_TX3+
NB_LAN_TX3-
RJ_TIP
RJ_RING
MH1
MH2
MH3
SHG1
RJ45/LED
RJ11
FOX_JM34F23-SBM4-D
USE SBM3 ON X01 BOARD,CHANGE TO SBM4 ON X02
DELL CONFIDENTIAL/PROPRIETARY
Compal Electronics, Inc.
Title
LAN TRANSFOMER
Size
Document Number
DDQ12/11/01 with LA-1901
Rev 1.0
Date: Thursday, July 03, 2003
Sheet 28 of 58

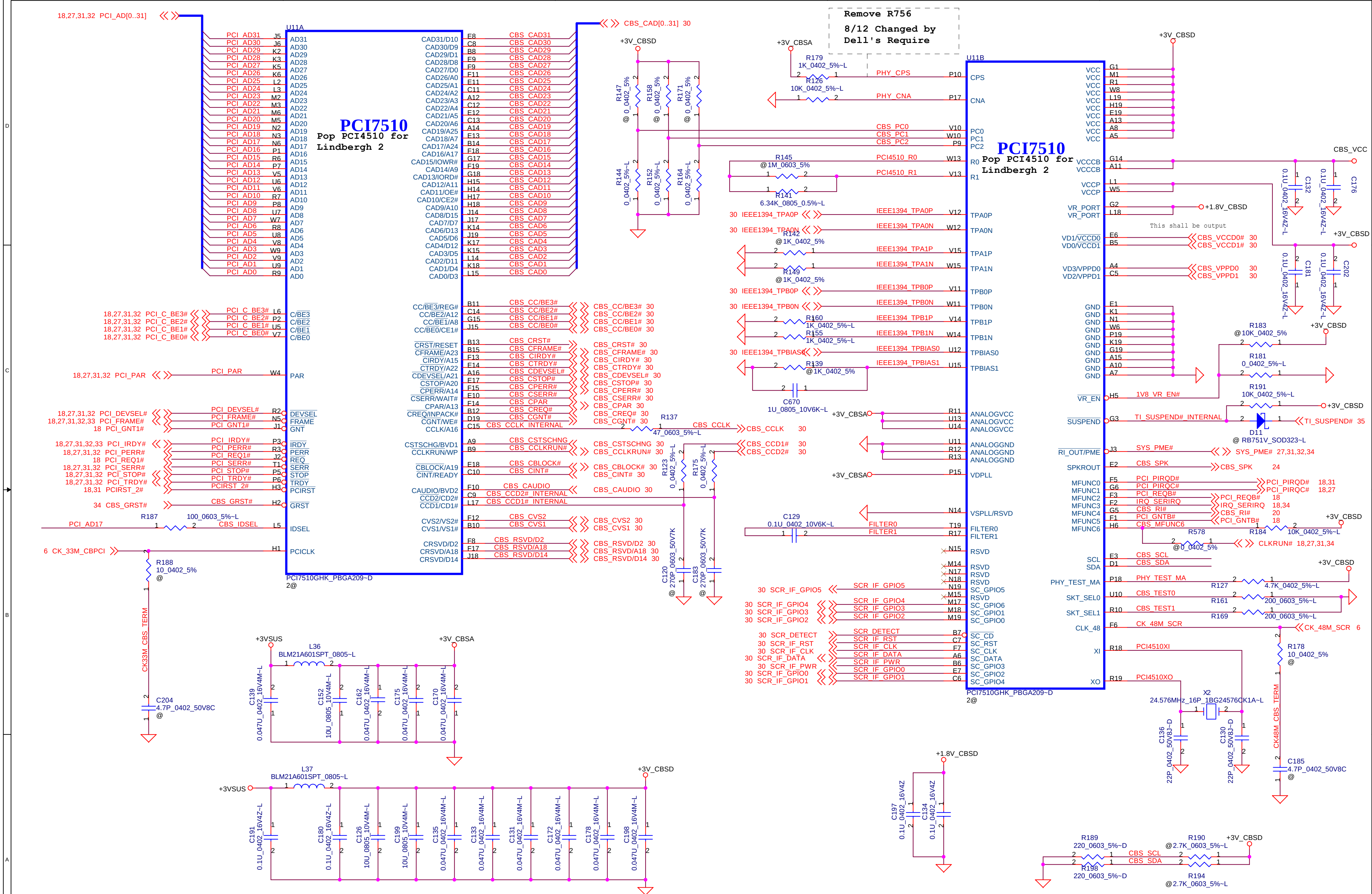

DELL CONFIDENTIAL/PROPRIETARY

Compal Electronics, Inc.

Title: PCMCIA Controller

Size	Document Number	Rev
	DDQ12/11/01 with LA-1901	1.0

Date: Thursday, July 03, 2003 | Sheet 29 of 58

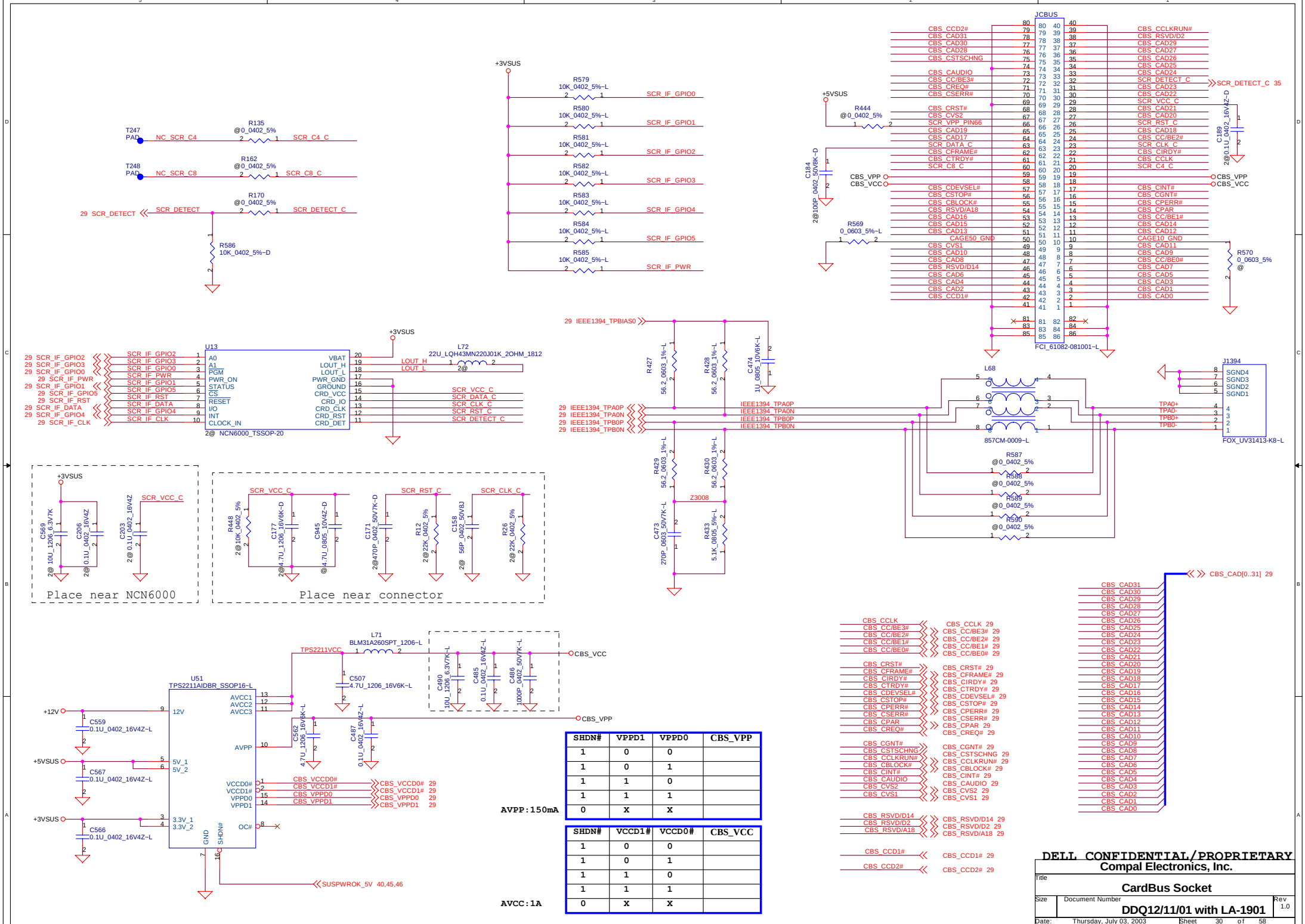

SHDN#	VPPD1	VPPD0	CBS_VPP
1	0	0	
1	0	1	
1	1	0	
1	1	1	
0	X	X	

AVPP:150mA

SHDN#	VCCD1#	VCCD0#	CBS_VCC
1	0	0	
1	0	1	
1	1	0	
1	1	1	
0	X	X	

AVCC:1A

DELL CONFIDENTIAL/PROPRIETARY
Compal Electronics, Inc.

Title: CardBus Socket

Size | Document Number: DDQ12/11/01 with LA-1901 | Rev 1.0

Date: Thursday, July 03, 2003 | Sheet 30 of 58

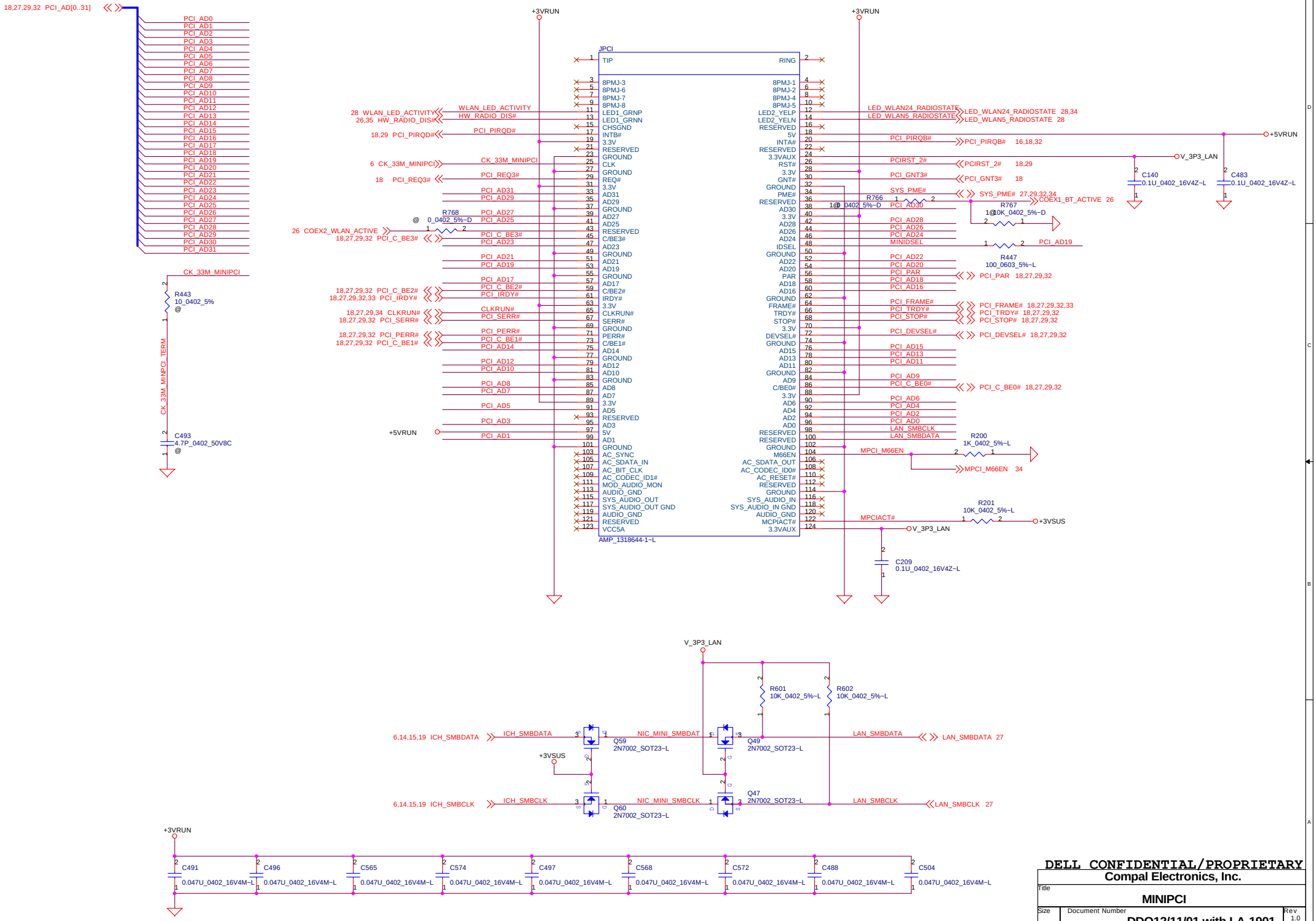

DELL CONFIDENTIAL/PROPRIETARY

Compal Electronics, Inc.

Title	**MINIPCI**	
Size	Document Number **DDQ12/11/01 with LA-1901**	Rev 1.0
Date: Thursday, July 03, 2003	Sheet 31 of 58	

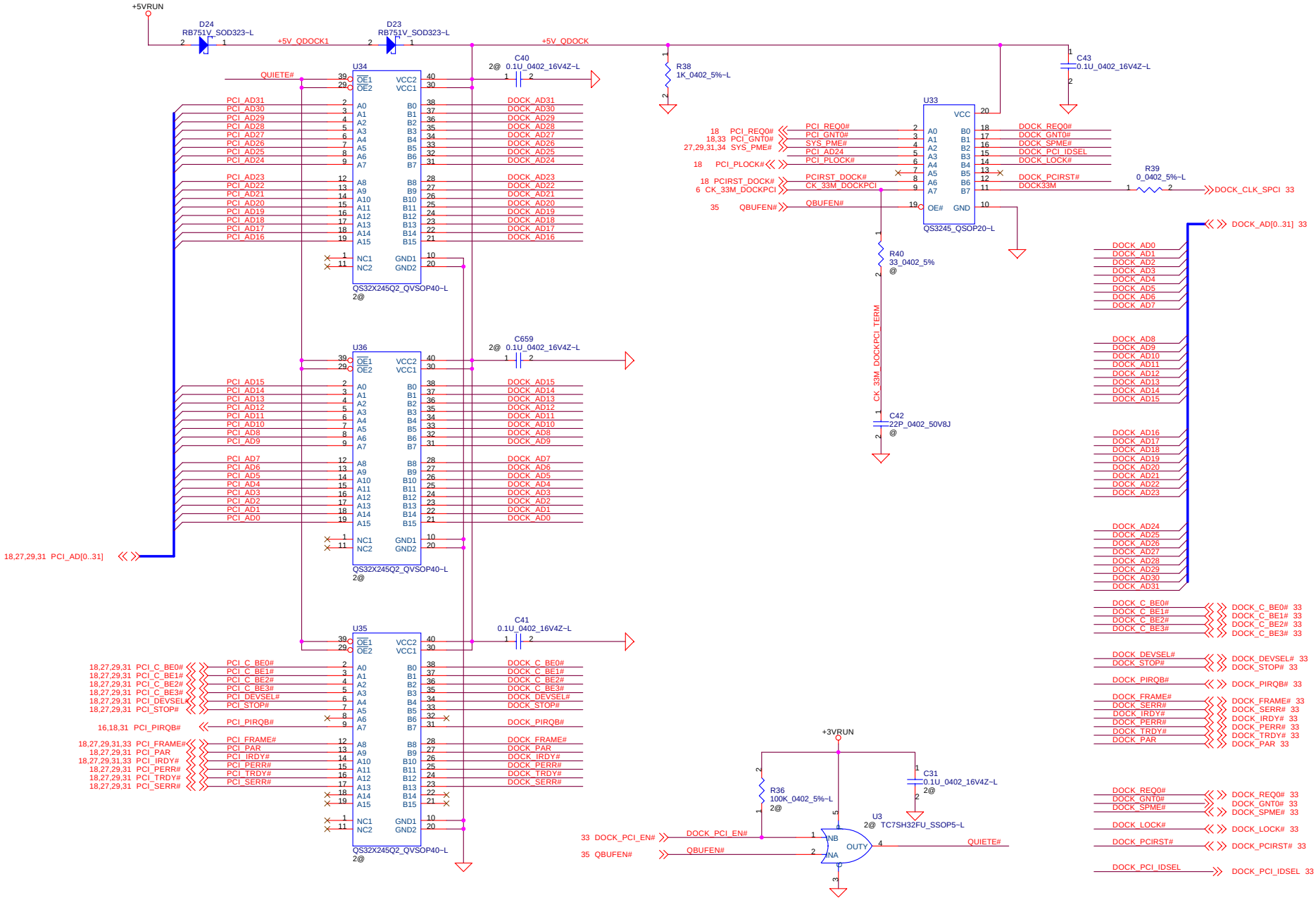

DELL CONFIDENTIAL/PROPRIETARY

Compal Electronics, Inc.

Title	**DOCKING BUFFER**	
Size	Document Number **DDQ12/11/01 with LA-1901**	Rev 1.0
Date: Thursday, July 03, 2003	Sheet 32 of 58	

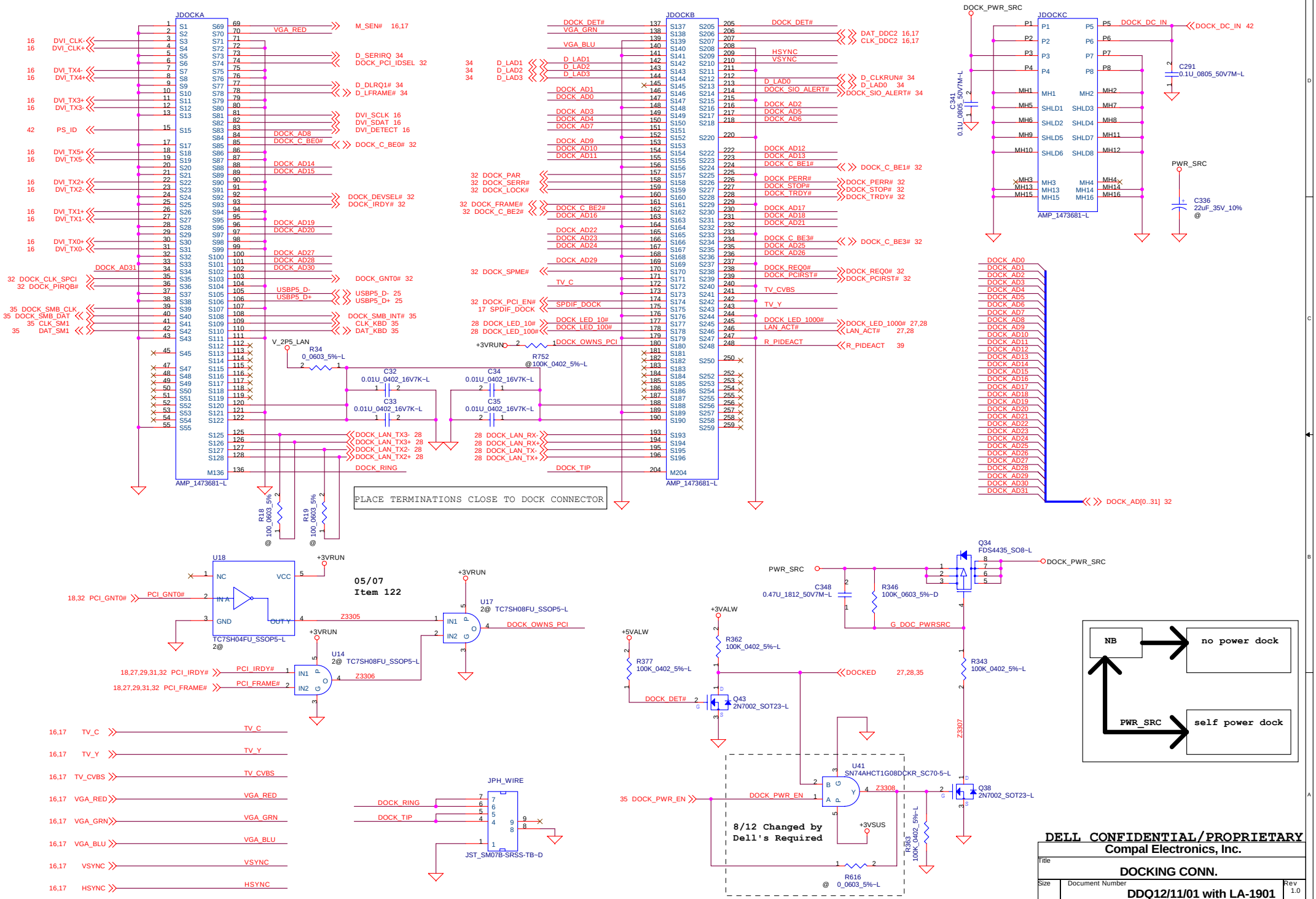

DELL CONFIDENTIAL/PROPRIETARY

Compal Electronics, Inc.

Title: DOCKING CONN.

Size | Document Number: DDQ12/11/01 with LA-1901 | Rev 1.0

Date: Thursday, July 03, 2003 | Sheet 33 of 58

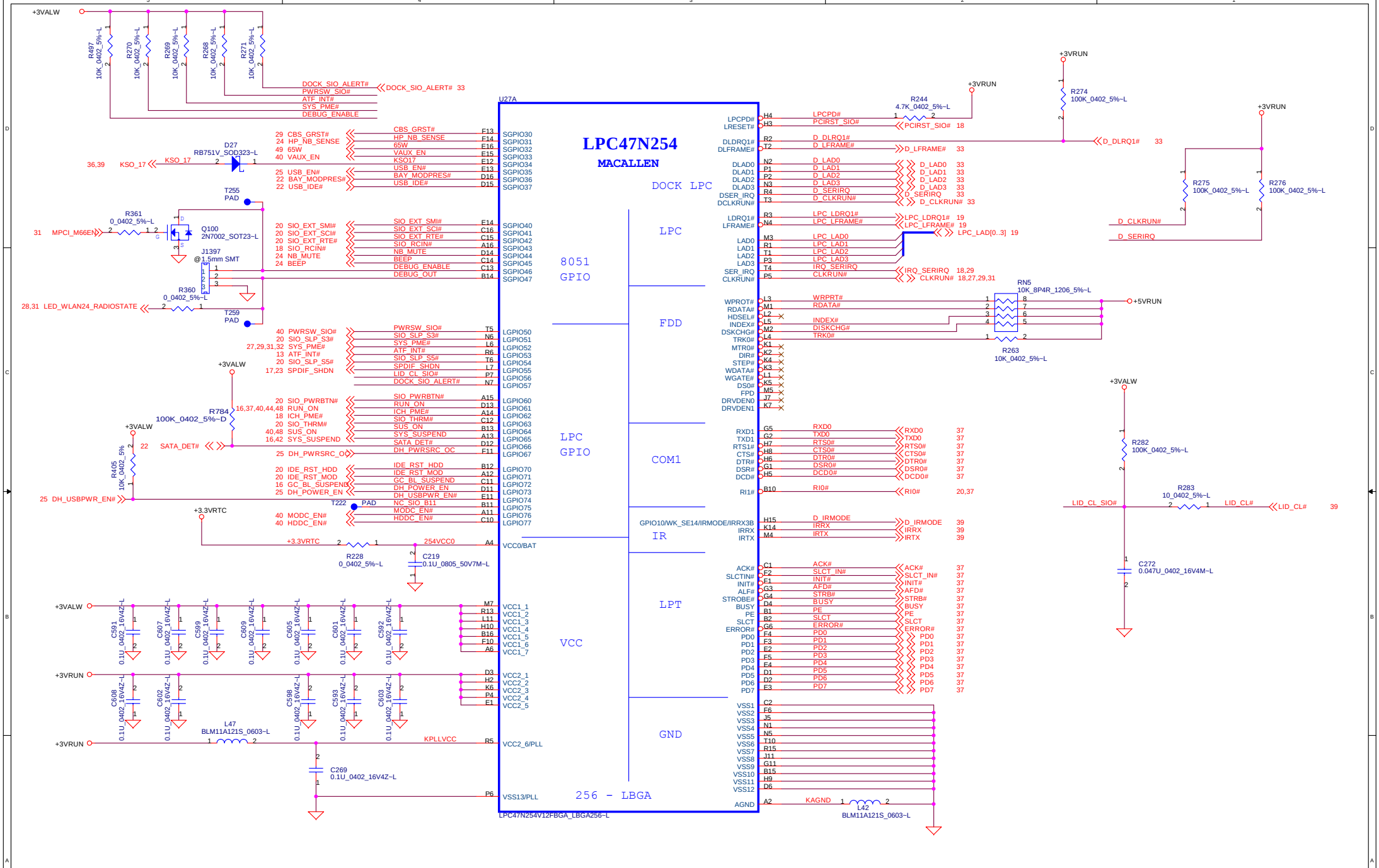

DELL CONFIDENTIAL/PROPRIETARY

Compal Electronics, Inc.

Title	SIO (1/2)	
Size	Document Number: DDQ12/11/01 with LA-1901	Rev 1.0
Date: Friday, July 04, 2003	Sheet 34 of 58	

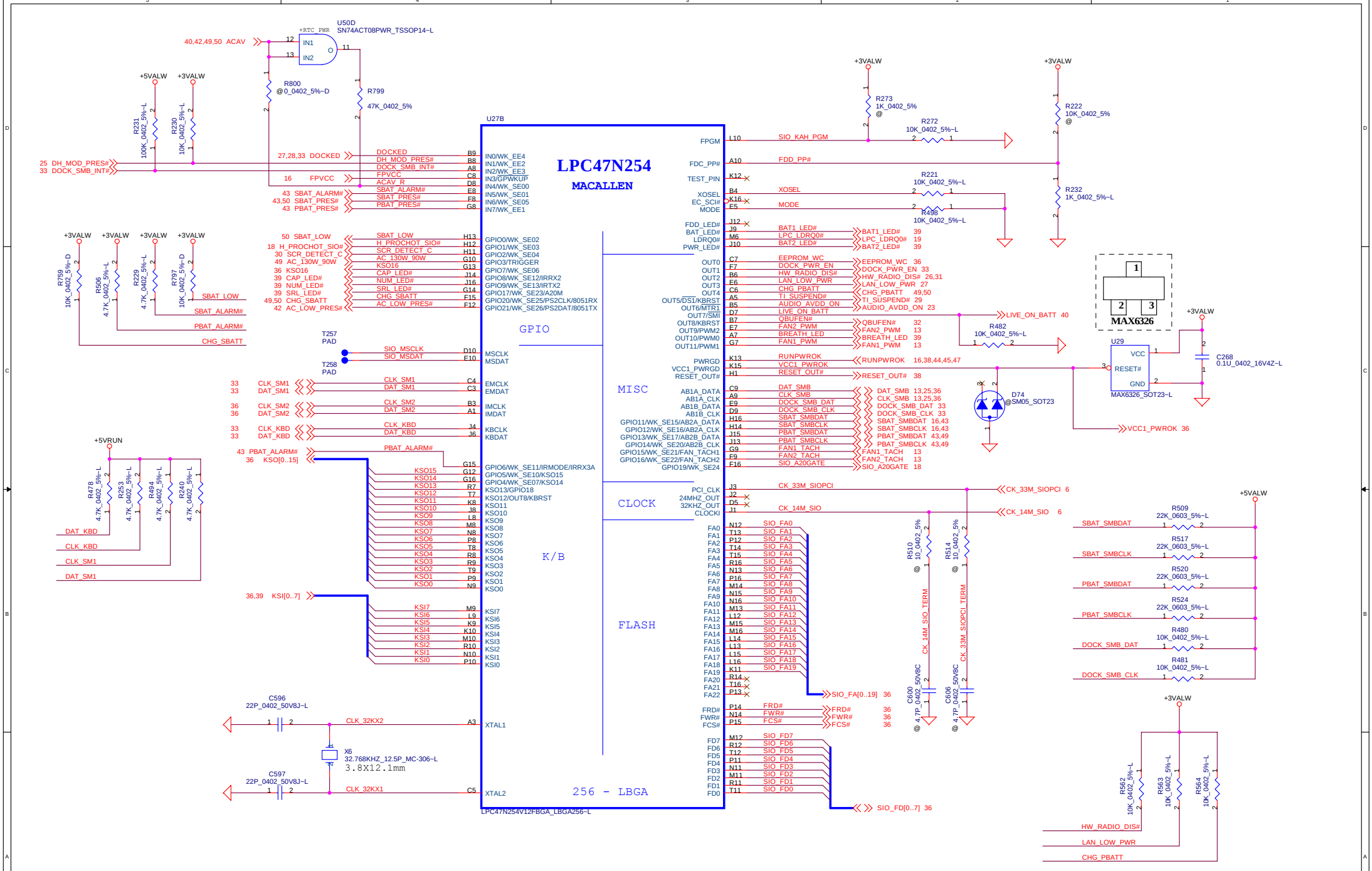

DELL CONFIDENTIAL/PROPRIETARY

Compal Electronics, Inc.

Title	SIO (2/2)	
Size	Document Number: DDQ12/11/01 with LA-1901	Rev 1.0
Date: Thursday, July 03, 2003	Sheet 35 of 58	

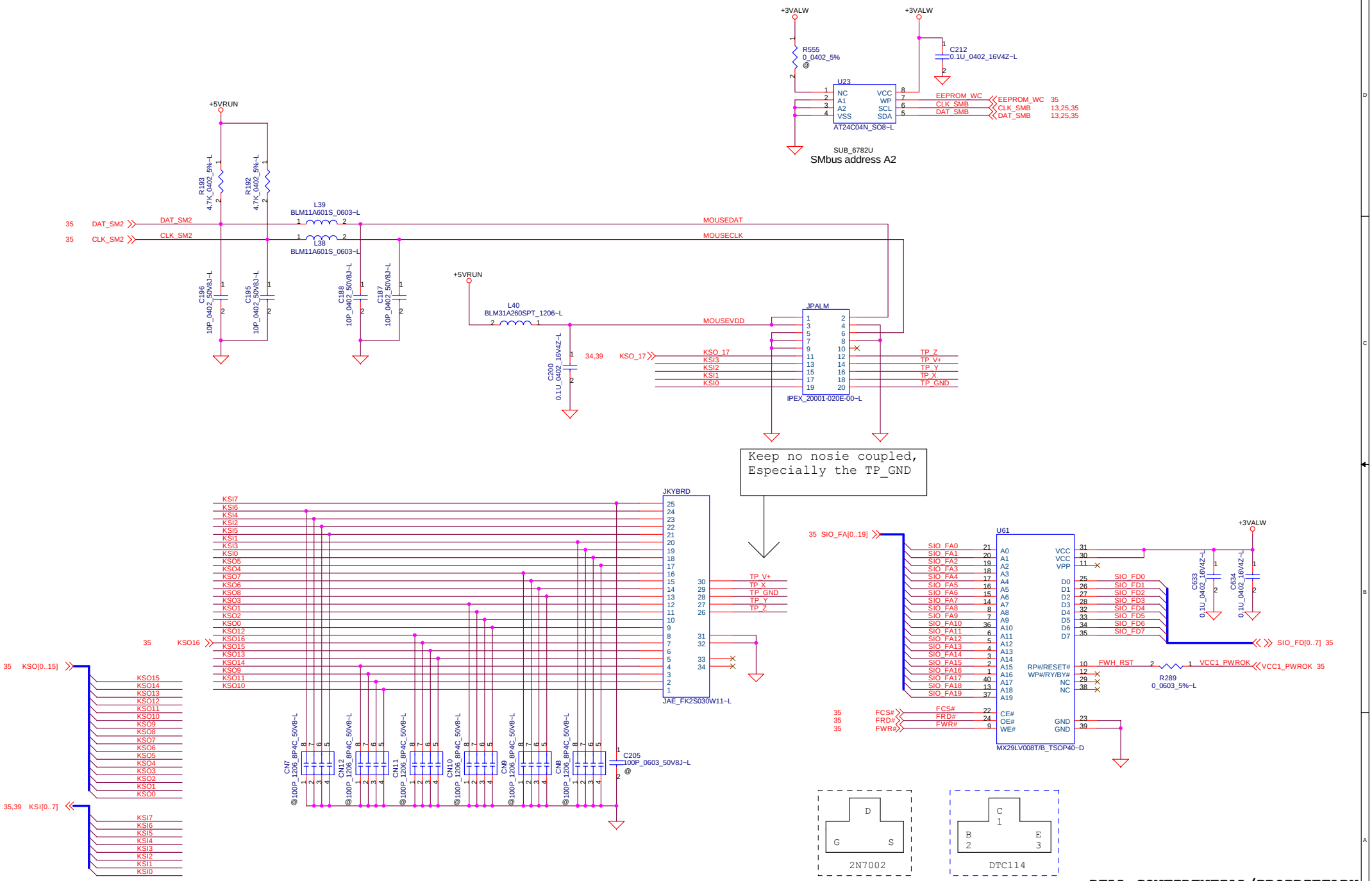

DELL CONFIDENTIAL/PROPRIETARY

Compal Electronics, Inc.

Title	**INT KB**	
Size	Document Number **DDQ12/11/01 with LA-1901**	Rev 1.0
Date: Thursday, July 03, 2003	Sheet 36 of 58	

Parallel Port

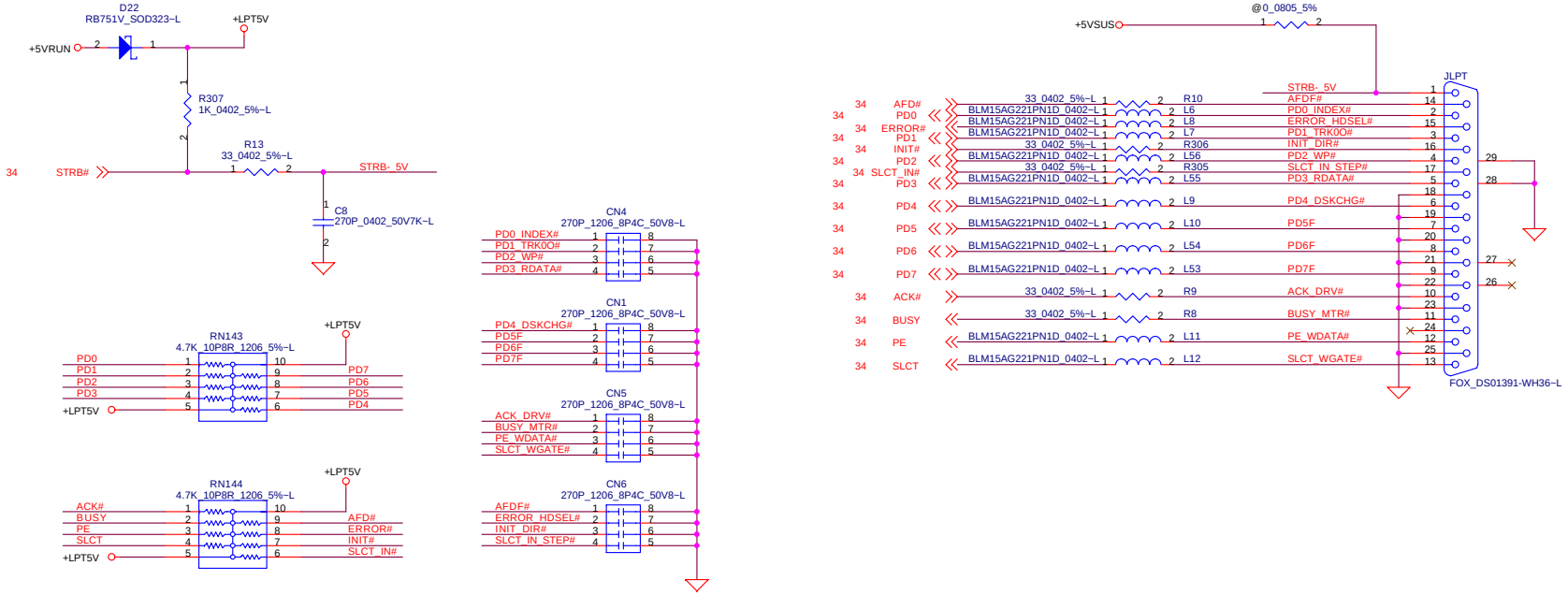

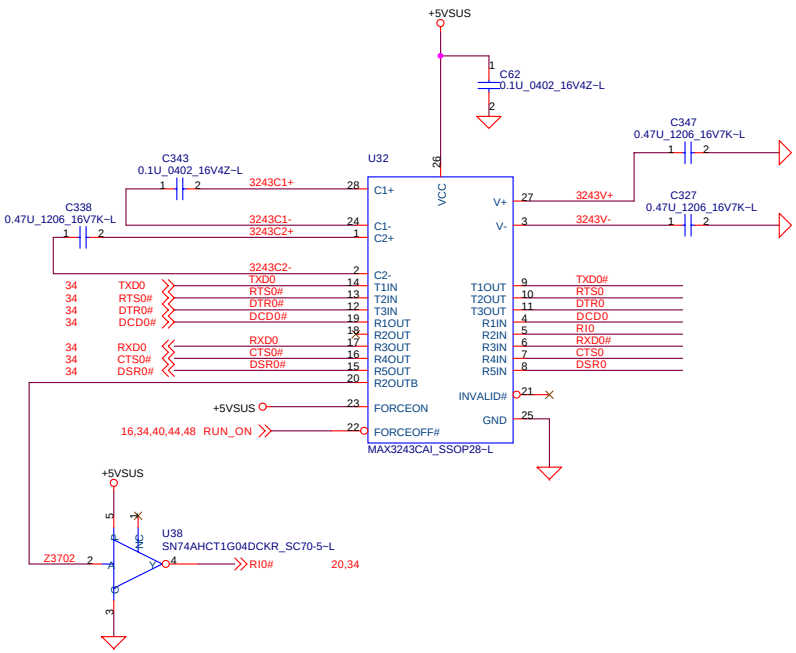

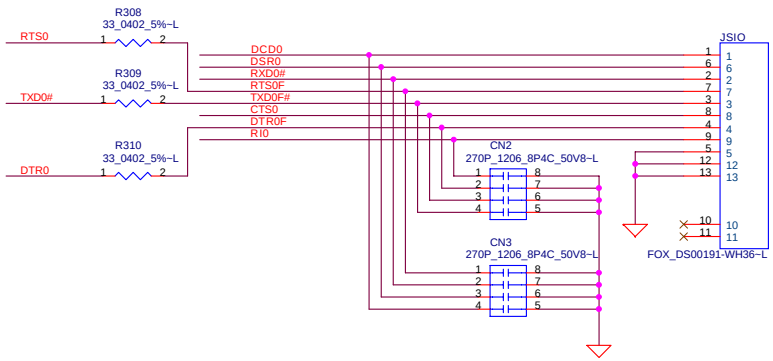

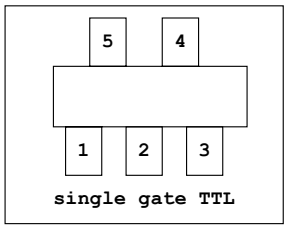

DELL CONFIDENTIAL/PROPRIETARY

Compal Electronics, Inc.

Title	LPT	
Size	Document Number: DDQ12/11/01 with LA-1901	Rev 1.0
Date: Thursday, July 03, 2003	Sheet 37 of 58	

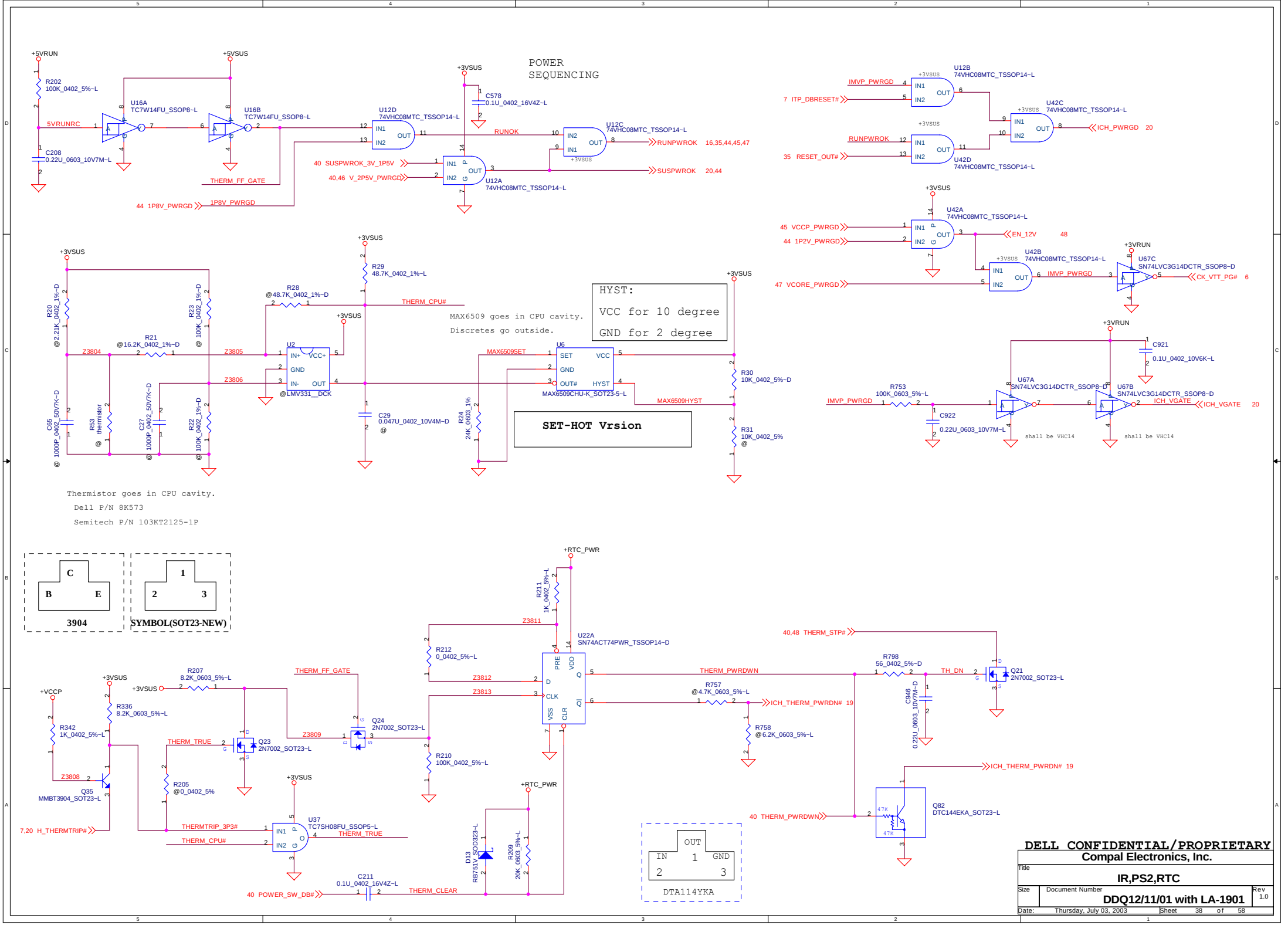
POWER SEQUENCING
+5VRUN
+5VSUS
+3VSUS
+3VRUN
+RTC_PWR
+VCCP
R202 100K_0402_5%~L
C208 0.22U_0603_10V7M~L
U16A TC7W14FU_SSOP8~L
U16B TC7W14FU_SSOP8~L
5VRUNRC
THERM_FF_GATE
44 1P8V_PWRGD
1P8V_PWRGD
U12D 74VHC08MTC_TSSOP14~L
C578 0.1U_0402_16V4Z~L
RUNOK
U12C 74VHC08MTC_TSSOP14~L
RUNPWROK 16,35,44,45,47
40 SUSPWROK_3V_1P5V
40,46 V_2P5V_PWRGD
U12A 74VHC08MTC_TSSOP14~L
SUSPWROK 20,44
IMVP_PWRGD
7 ITP_DBRESET#
U12B 74VHC08MTC_TSSOP14~L
U42C 74VHC08MTC_TSSOP14~L
ICH_PWRGD 20
RUNPWROK
35 RESET_OUT#
U42D 74VHC08MTC_TSSOP14~L
45 VCCP_PWRGD
44 1P2V_PWRGD
U42A 74VHC08MTC_TSSOP14~L
EN_12V 48
U42B 74VHC08MTC_TSSOP14~L
47 VCORE_PWRGD
U67C SN74LVC3G14DCTR_SSOP8~D
CK_VTT_PG# 6
R20 @2.21K_0402_1%~D
R21 @16.2K_0402_1%~D
R23 @ 100K_0402_1%~D
Z3804
Z3805
Z3806
C65 @ 1000P_0402_50V7K~D
R53 thermistor @
C27 @ 1000P_0402_50V7K~D
R22 @ 100K_0402_1%~D
R28 @48.7K_0402_1%~D
R29 48.7K_0402_1%~L
THERM_CPU#
U2 @LMV331__DCK
C29 0.047U_0402_10V4M~D @
R24 24K_0603_1%
MAX6509SET
U6 MAX6509CHU-K_SOT23-5~L
MAX6509HYST
R30 10K_0402_5%~D
R31 10K_0402_5% @
MAX6509 goes in CPU cavity.
Discretes go outside.
HYST:
VCC for 10 degree
GND for 2 degree
SET-HOT Vrsion
Thermistor goes in CPU cavity.
Dell P/N 8K573
Semitech P/N 103KT2125-1P
R753 100K_0603_5%~L
C922 0.22U_0603_10V7M~L
C921 0.1U_0402_10V6K~L
U67A SN74LVC3G14DCTR_SSOP8~D
U67B SN74LVC3G14DCTR_SSOP8~D
ICH_VGATE 20
shall be VHC14
3904
SYMBOL(SOT23-NEW)
R211 1K_0402_5%~L
Z3811
U22A SN74ACT74PWR_TSSOP14~D
R212 0_0402_5%~L
Z3812
Z3813
R207 8.2K_0603_5%~L
R336 8.2K_0603_5%~L
R342 1K_0402_5%~L
Z3808
Q35 MMBT3904_SOT23~L
THERM_TRUE
Q23 2N7002_SOT23~L
Q24 2N7002_SOT23~L
Z3809
R210 100K_0402_5%~L
R205 @0_0402_5%
7,20 H_THERMTRIP#
THERMTRIP_3P3#
THERM_CPU#
U37 TC7SH08FU_SSOP5~L
THERM_TRUE
C211 0.1U_0402_16V4Z~L
40 POWER_SW_DB#
THERM_CLEAR
D13 RB751V
R209 20K_0603_5%~L
40,48 THERM_STP#
THERM_PWRDWN
R798 56_0402_5%~D
TH_DN
Q21 2N7002_SOT23~L
R757 @4.7K_0603_5%~L
ICH_THERM_PWRDN# 19
R758 @6.2K_0603_5%~L
C946 0.22U_0603_10V7M~D
40 THERM_PWRDWN
Q82 DTC144EKA_SOT23~L
47K
DTA114YKA
IN
OUT
GND
DELL CONFIDENTIAL/PROPRIETARY
Compal Electronics, Inc.
Title
IR,PS2,RTC
Size
Document Number
DDQ12/11/01 with LA-1901
Rev 1.0
Date: Thursday, July 03, 2003
Sheet 38 of 58

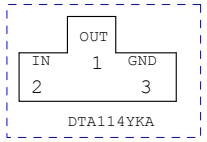

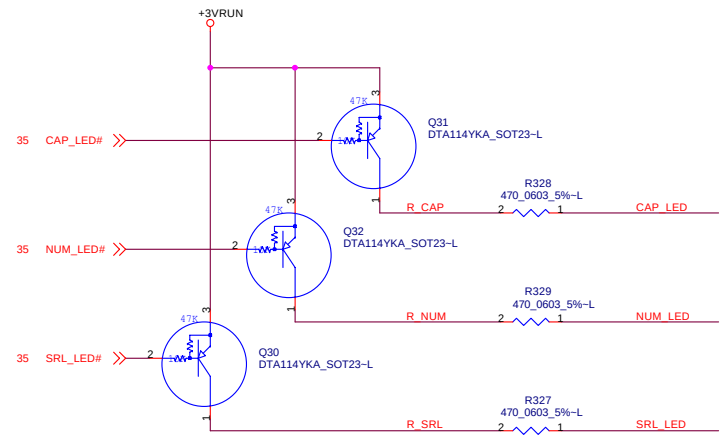

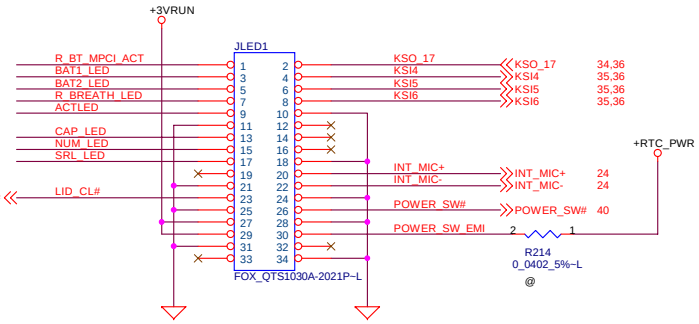

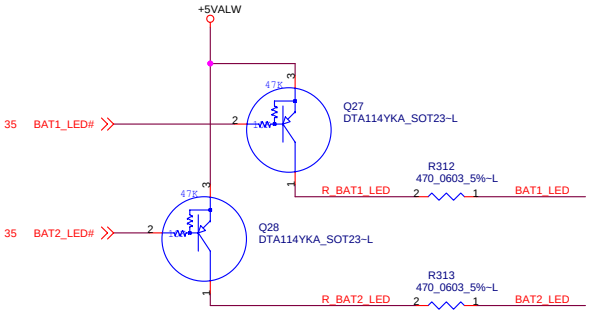

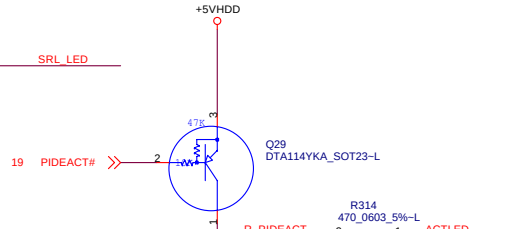

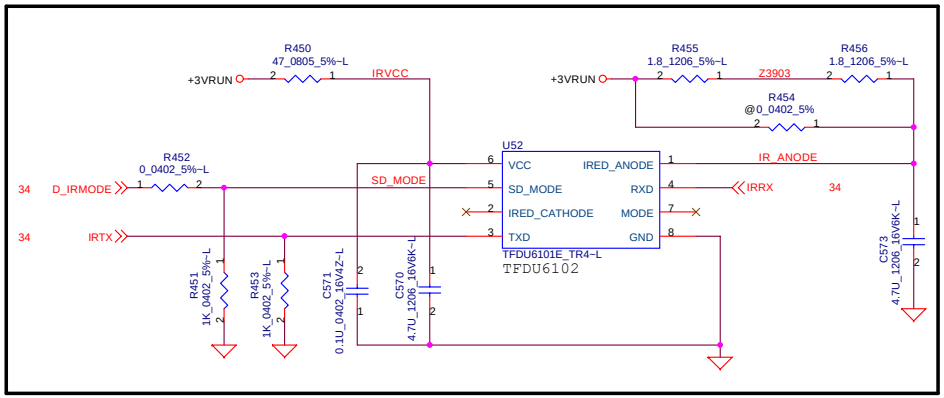

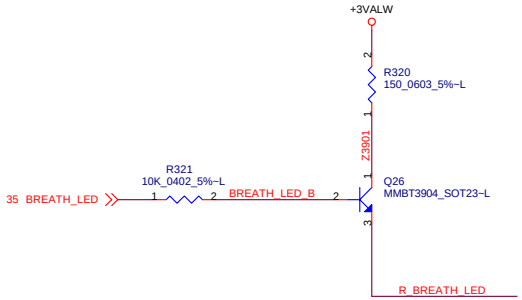

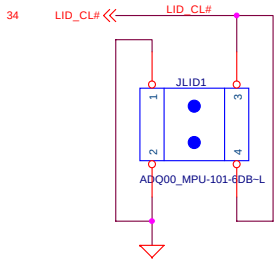

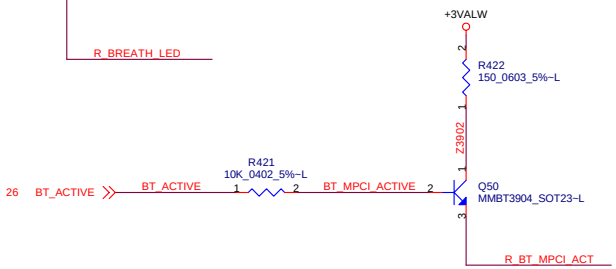

DELL CONFIDENTIAL/PROPRIETARY

Compal Electronics, Inc.

Title	**JLED/IR/PS2**	
Size	Document Number **DDQ12/11/01 with LA-1901**	Rev 1.0
Date: Thursday, July 03, 2003	Sheet 39 of 58	

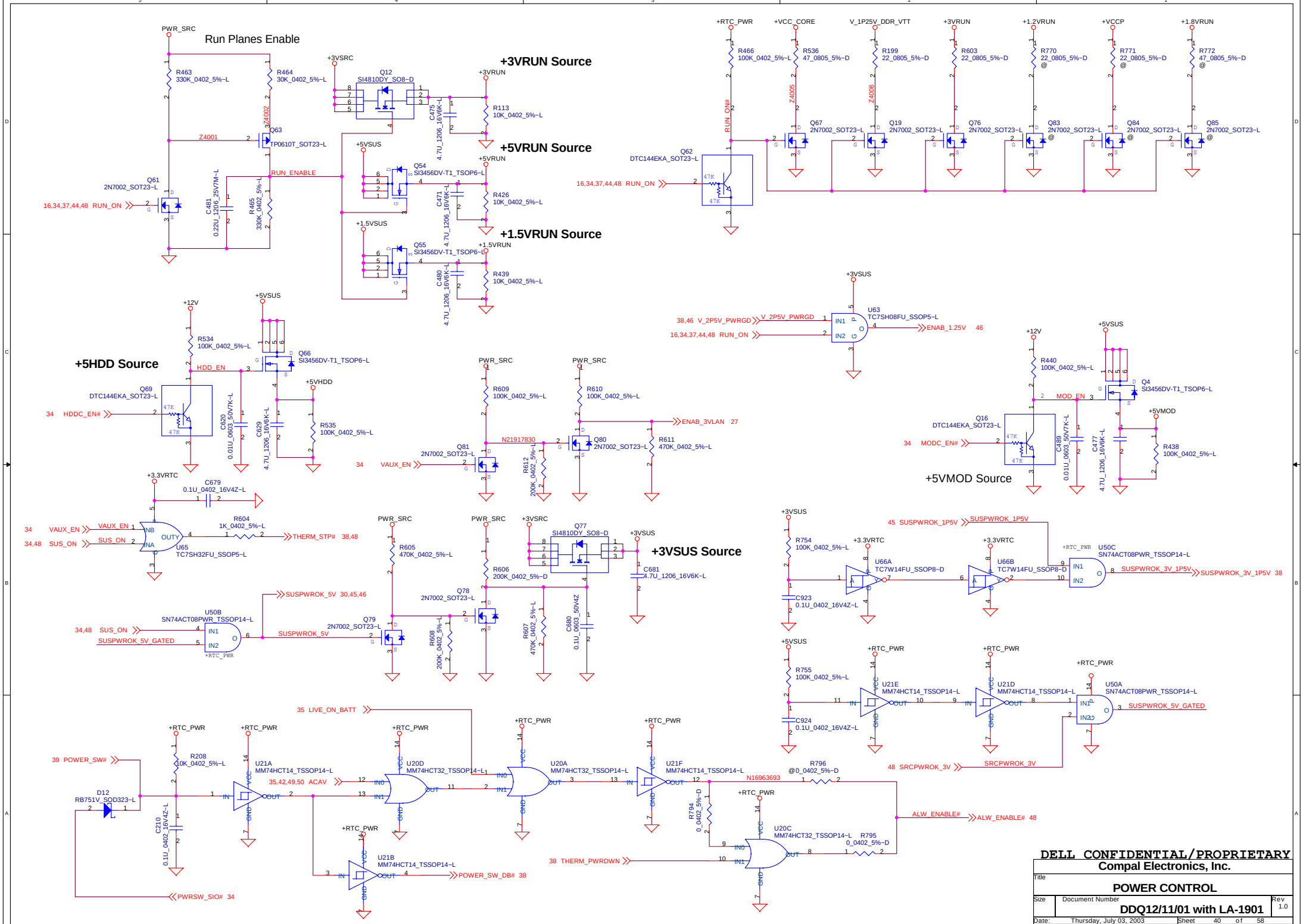
Run Planes Enable
+3VRUN Source
+5VRUN Source
+1.5VRUN Source
+5HDD Source
+3VSUS Source
+5VMOD Source
PWR_SRC
R463 330K_0402_5%-L
R464 30K_0402_5%-L
Q12 SI4810DY_SO8-D
Q63 TP0610T_SOT23-L
Q61 2N7002_SOT23-L
16,34,37,44,48 RUN_ON
RUN_ENABLE
Q54 SI3456DV-T1_TSOP6-L
Q55 SI3456DV-T1_TSOP6-L
R113 10K_0402_5%-L
R426 10K_0402_5%-L
R439 10K_0402_5%-L
+RTC_PWR
+VCC_CORE
V_1P25V_DDR_VTT
+3VRUN
+1.2VRUN
+VCCP
+1.8VRUN
Q62 DTC144EKA_SOT23-L
Q67 2N7002_SOT23-L
Q19 2N7002_SOT23-L
Q76 2N7002_SOT23-L
Q83 2N7002_SOT23-L
Q84 2N7002_SOT23-L
Q85 2N7002_SOT23-L
U63 TC7SH08FU_SSOP5-L
38,46 V_2P5V_PWRGD
ENAB_1.25V 46
Q66 SI3456DV-T1_TSOP6-L
Q69 DTC144EKA_SOT23-L
34 HDDC_EN#
HDD_EN
+5VHDD
R534 100K_0402_5%-L
R535 100K_0402_5%-L
R609 100K_0402_5%-L
R610 100K_0402_5%-L
ENAB_3VLAN 27
N21917830
Q81 2N7002_SOT23-L
Q80 2N7002_SOT23-L
R611 470K_0402_5%-L
R612 200K_0402_5%-L
34 VAUX_EN
Q4 SI3456DV-T1_TSOP6-L
Q16 DTC144EKA_SOT23-L
34 MODC_EN#
MOD_EN
+5VMOD
R440 100K_0402_5%-L
R438 100K_0402_5%-L
C679 0.1U_0402_16V4Z-L
U65 TC7SH32FU_SSOP5-L
VAUX_EN
SUS_ON
R604 1K_0402_5%-L
THERM_STP# 38,48
R605 470K_0402_5%-L
R606 200K_0402_5%-D
Q77 SI4810DY_SO8-D
C681 4.7U_1206_16V6K-L
Q78 2N7002_SOT23-L
Q79 2N7002_SOT23-L
R608 200K_0402_5%-L
R607 470K_0402_5%-L
C680 0.1U_0603_50V4Z
SUSPWROK_5V 30,45,46
SUSPWROK_5V
U50B SN74ACT08PWR_TSSOP14-L
34,48 SUS_ON
SUSPWROK_5V_GATED
45 SUSPWROK_1P5V
SUSPWROK_1P5V
R754 100K_0402_5%-L
C923 0.1U_0402_16V4Z-L
U66A TC7W14FU_SSOP8-D
U66B TC7W14FU_SSOP8-D
U50C SN74ACT08PWR_TSSOP14-L
SUSPWROK_3V_1P5V 38
R755 100K_0402_5%-L
C924 0.1U_0402_16V4Z-L
U21E MM74HCT14_TSSOP14-L
U21D MM74HCT14_TSSOP14-L
U50A SN74ACT08PWR_TSSOP14-L
SUSPWROK_5V_GATED
48 SRCPWROK_3V
SRCPWROK_3V
35 LIVE_ON_BATT
39 POWER_SW#
R208 10K_0402_5%-L
D12 RB751V_SOD323-L
C210 0.1U_0402_16V4Z-L
U21A MM74HCT14_TSSOP14-L
35,42,49,50 ACAV
U20D MM74HCT32_TSSOP14-L
U20A MM74HCT32_TSSOP14-L
U21F MM74HCT14_TSSOP14-L
N16963693
R796 @0_0402_5%-D
R794 0_0402_5%-D
U20C MM74HCT32_TSSOP14-L
R795 0_0402_5%-D
ALW_ENABLE#
ALW_ENABLE# 48
38 THERM_PWRDWN
U21B MM74HCT14_TSSOP14-L
POWER_SW_DB# 38
PWRSW_SIO# 34
DELL CONFIDENTIAL/PROPRIETARY
Compal Electronics, Inc.
Title
POWER CONTROL
Size
Document Number
DDQ12/11/01 with LA-1901
Rev 1.0
Date: Thursday, July 03, 2003
Sheet 40 of 58

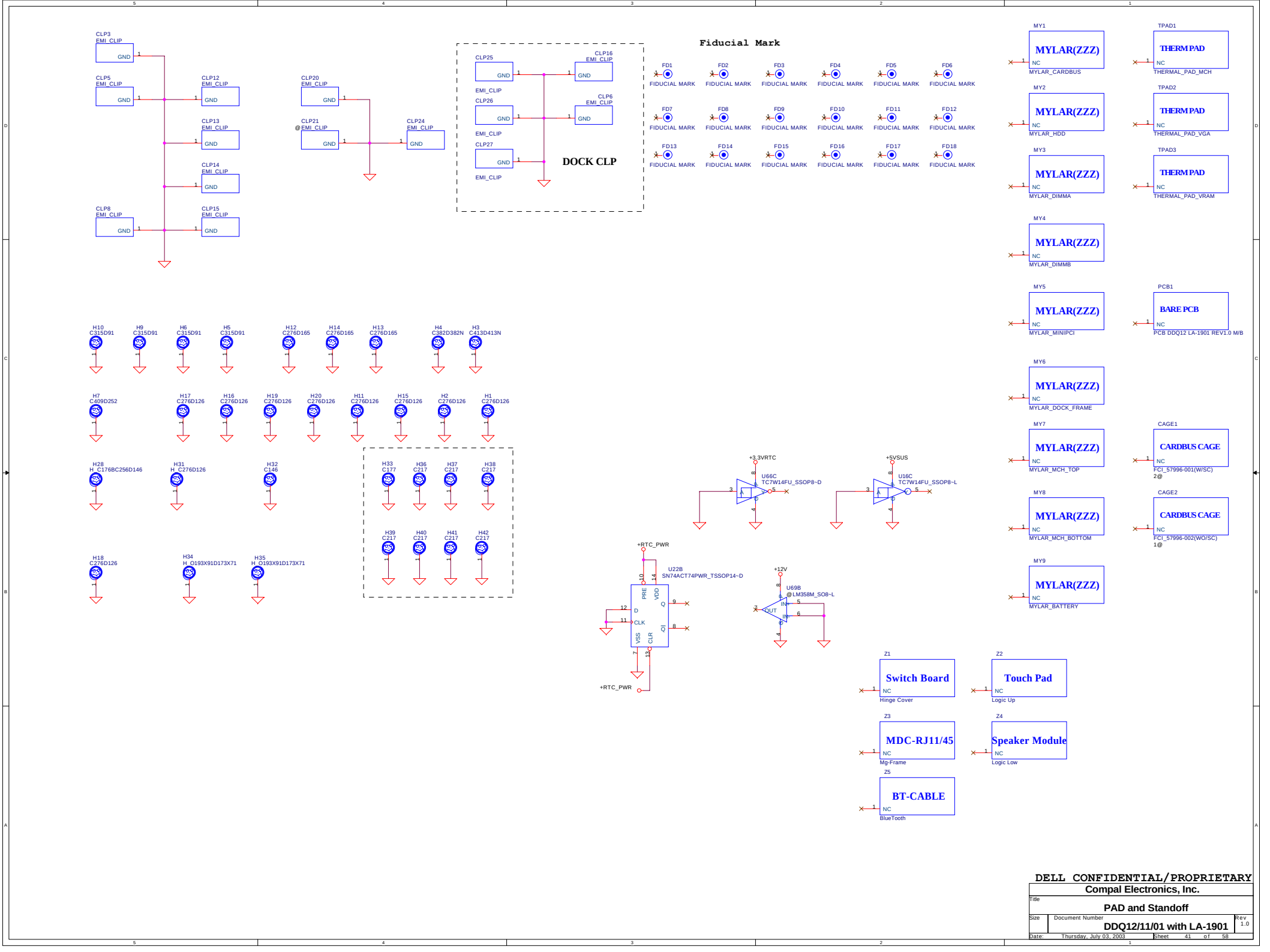

DELL CONFIDENTIAL/PROPRIETARY

Compal Electronics, Inc.

Title	PAD and Standoff	
Size	Document Number DDQ12/11/01 with LA-1901	Rev 1.0
Date: Thursday, July 03, 2003	Sheet 41 of 58	

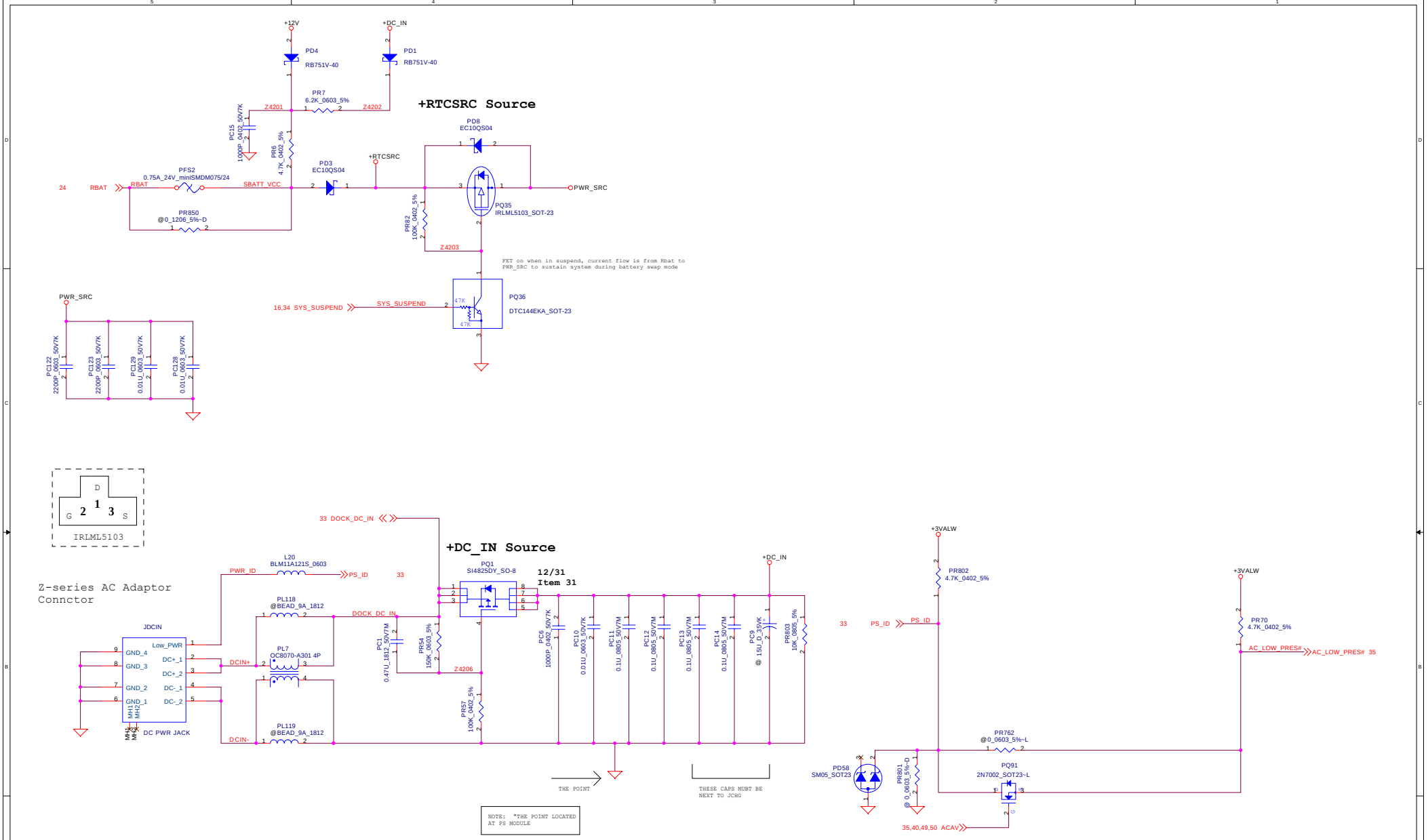

DELL CONFIDENTIAL/PROPRIETARY

Compal Electronics, Inc.

Title	SCHEM,PLN,MN,KAPALUA II DC-IN	
Size	Document Number DDQ12/11/01 with LA-1901	Rev 1.0
Date: Thursday, July 03, 2003	Sheet 42 of 58	

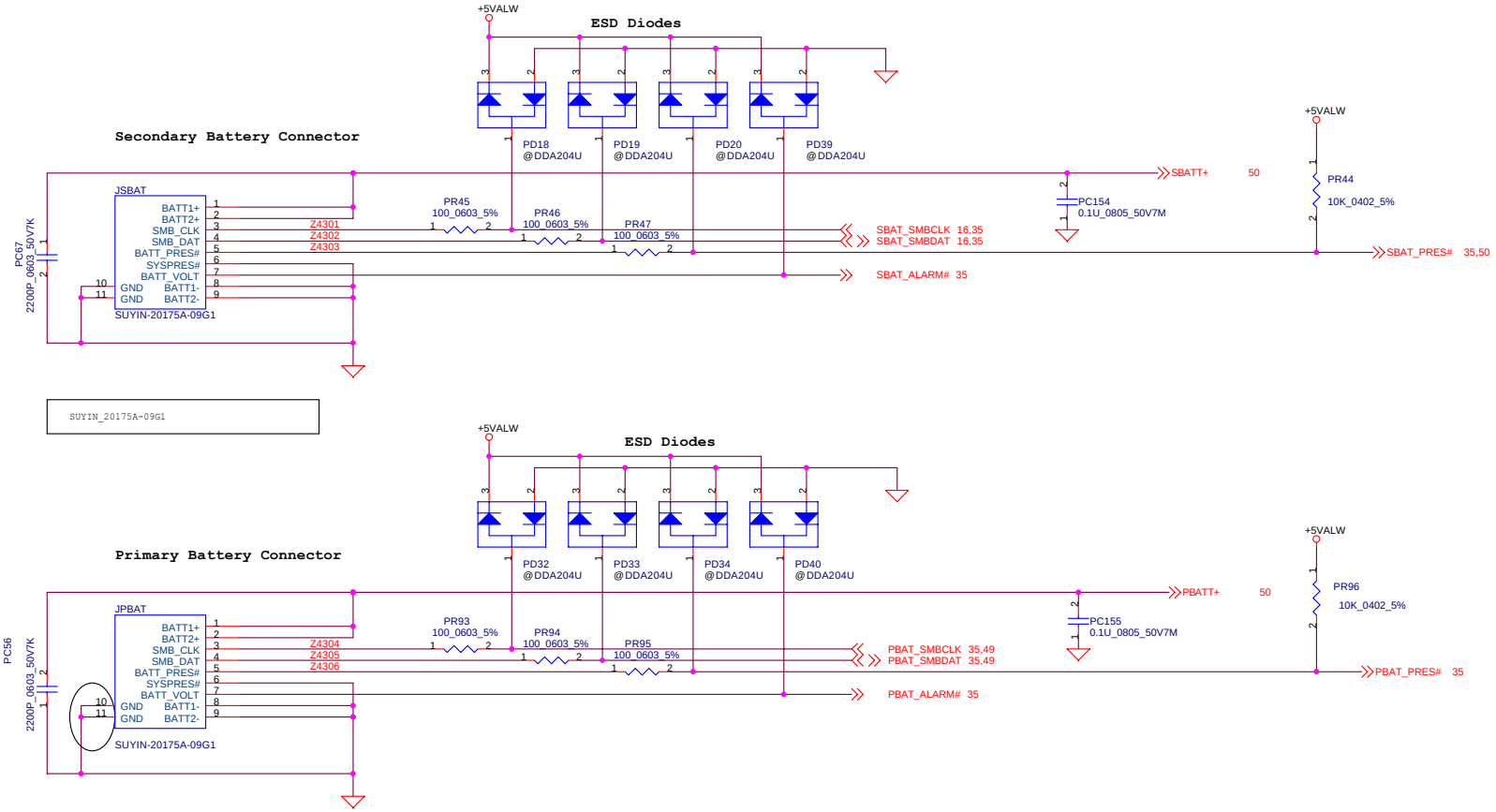

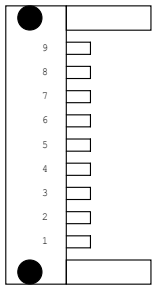

SUYIN_20175A-09G1
TOP view

DELL CONFIDENTIAL/PROPRIETARY

Compal Electronics, Inc.

Title: **SCHEM,PLN,MN,KAPALUA II Battery CONN.**

Size | Document Number: **DDQ12/11/01 with LA-1901** | Rev 1.0

Date: Thursday, July 03, 2003 | Sheet 43 of 58

+1.2VRUN/+1.8VRUN SOURCE

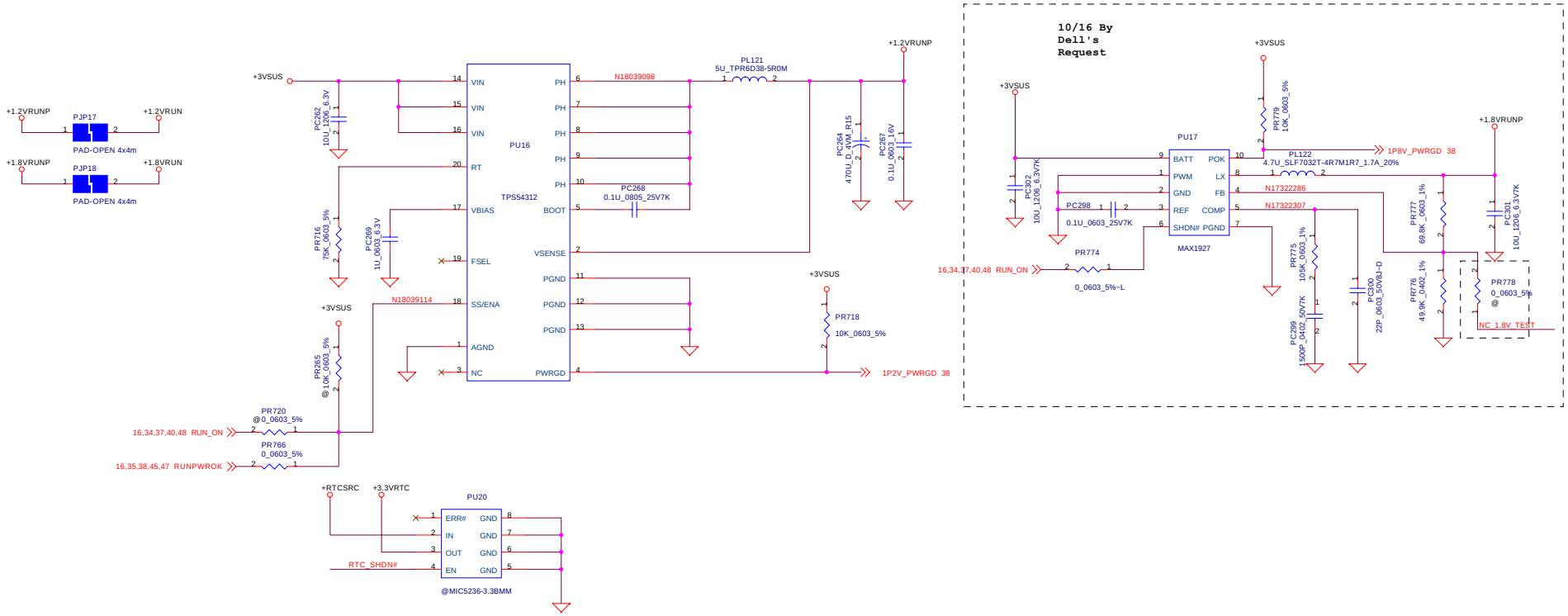

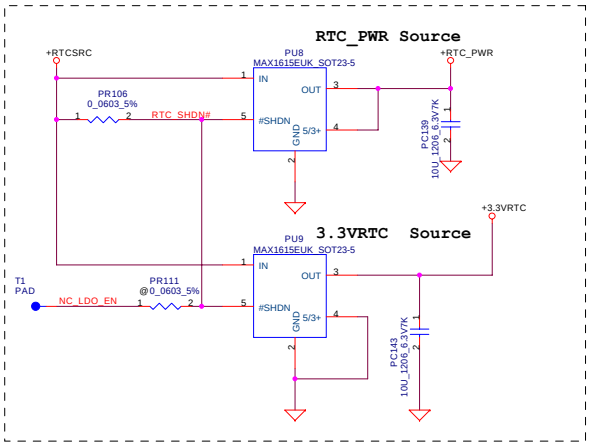

Allows SUS planes to power ALW planes when possible

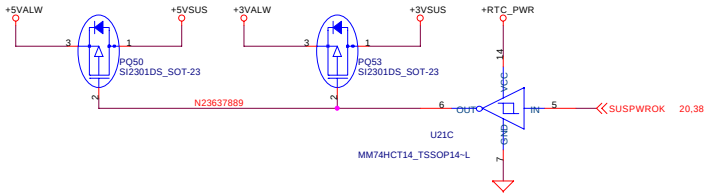

THIS SHEET OF ENGINEERING DRAWING IS THE PROPRIETARY PROPERTY OF COMPAL ELECTRONICS, INC. AND CONTAINS CONFIDENTIAL AND TRADE SECRET INFORMATION. THIS SHEET MAY NOT BE TRANSFERED FROM THE CUSTODY OF THE COMPETENT DIVISION OF R&D DEPARTMENT EXCEPT AS AUTHORIZED BY COMPAL ELECTRONICS, INC. NEITHER THIS SHEET NOR THE INFORMATION IT CONTAINS MAY BE USED BY OR DISCLOSED TO ANY THIRD PARTY WITHOUT PRIOR WRITTEN CONSENT OF COMPAL ELECTRONICS, INC.

DA0JM2MBCA1

Dell-Compal Confidential

DELL CONFIDENTIAL/PROPRIETARY

COMPAL ELECTRONICS, INC

Title	SCHEM,PLN,MN,KAPALUA II +1.2V & +1.8V	
Size	Document Number DDQ12/11/01 with LA-1901	Rev 1.0
Date: Thursday, July 03, 2003	Sheet 44 of 58	

+1.5VSUS/+1.05V(+VCCP)

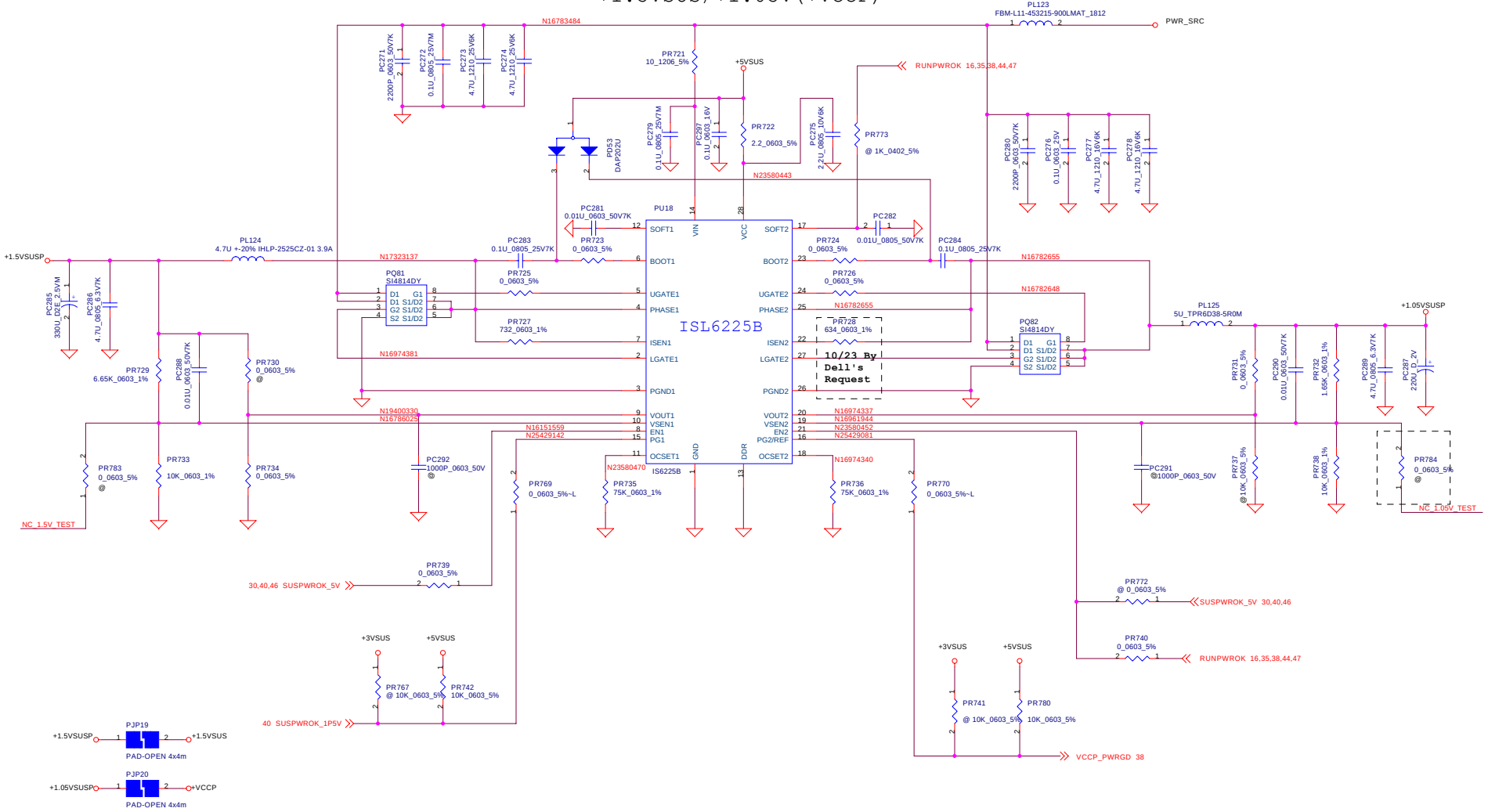

THIS SHEET OF ENGINEERING DRAWING IS THE PROPRIETARY PROPERTY OF COMPAL ELECTRONICS, INC. AND CONTAINS CONFIDENTIAL AND TRADE SECRET INFORMATION. THIS SHEET MAY NOT BE TRANSFERED FROM THE CUSTODY OF THE COMPETENT DIVISION OF R&D DEPARTMENT EXCEPT AS AUTHORIZED BY COMPAL ELECTRONICS, INC. NEITHER THIS SHEET NOR THE INFORMATION IT CONTAINS MAY BE USED BY OR DISCLOSED TO ANY THIRD PARTY WITHOUT PRIOR WRITTEN CONSENT OF COMPAL ELECTRONICS, INC.

DELL CONFIDENTIAL/PROPRIETARY

COMPAL ELECTRONICS, INC

Title	SCHEM,PLN,MN,KAPALUA II +1.5V & +1.05V
Size	Document Number: DDQ12/11/01 with LA-1901 — Rev 1.0
Date: Thursday, July 03, 2003	Sheet 45 of 58

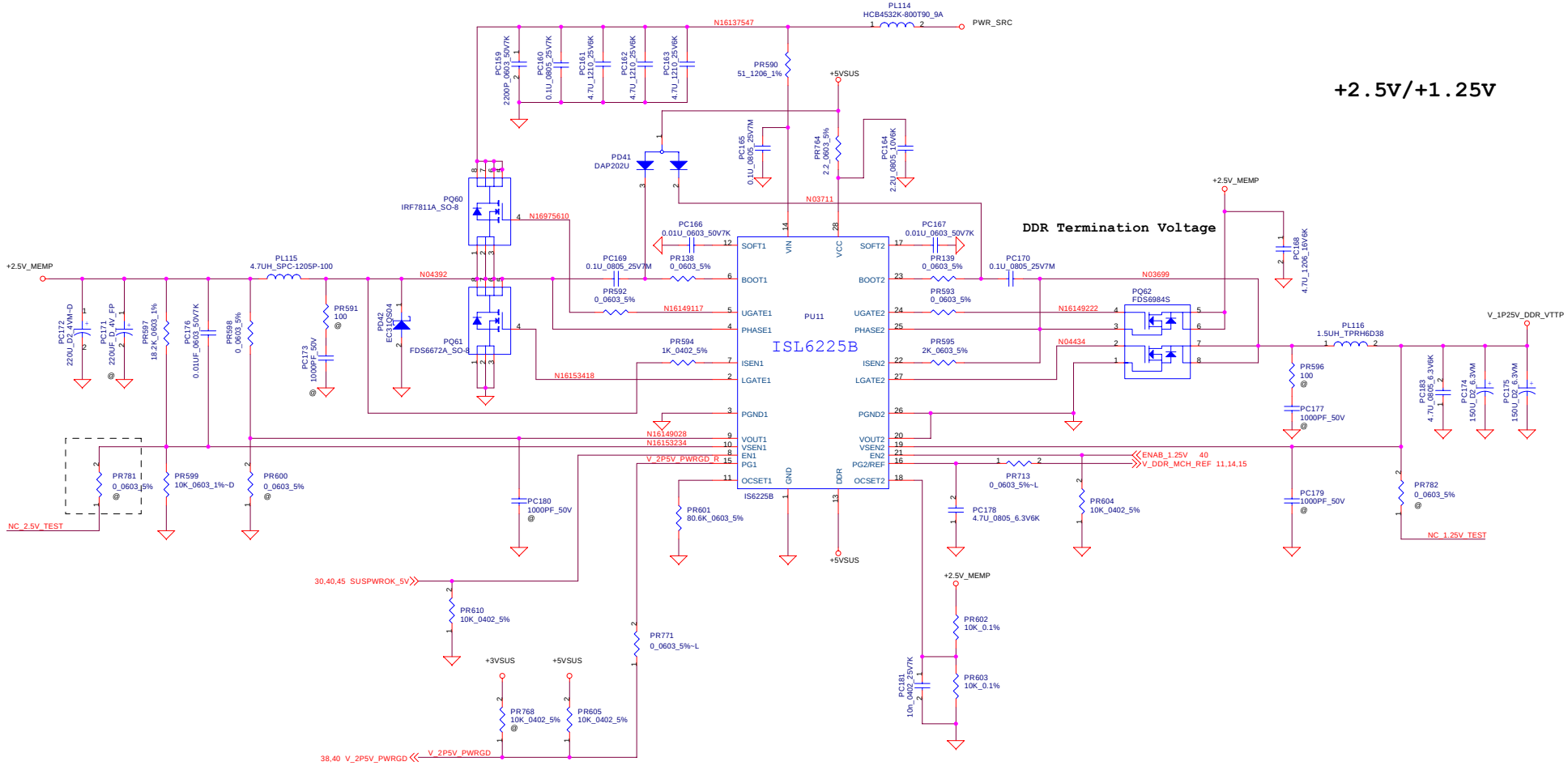

DELL CONFIDENTIAL/PROPRIETARY

Compal Electronics, Inc.

Title	SCHEM,PLN,MN,KAPALUA II 1.25V/2.5V
Size	Document Number: DDQ12/11/01 with LA-1901
Rev	1.0
Date: Thursday, July 03, 2003	Sheet 46 of 58

ADD PR901, PR902 for SC1476 ISSUE_2003/06/13

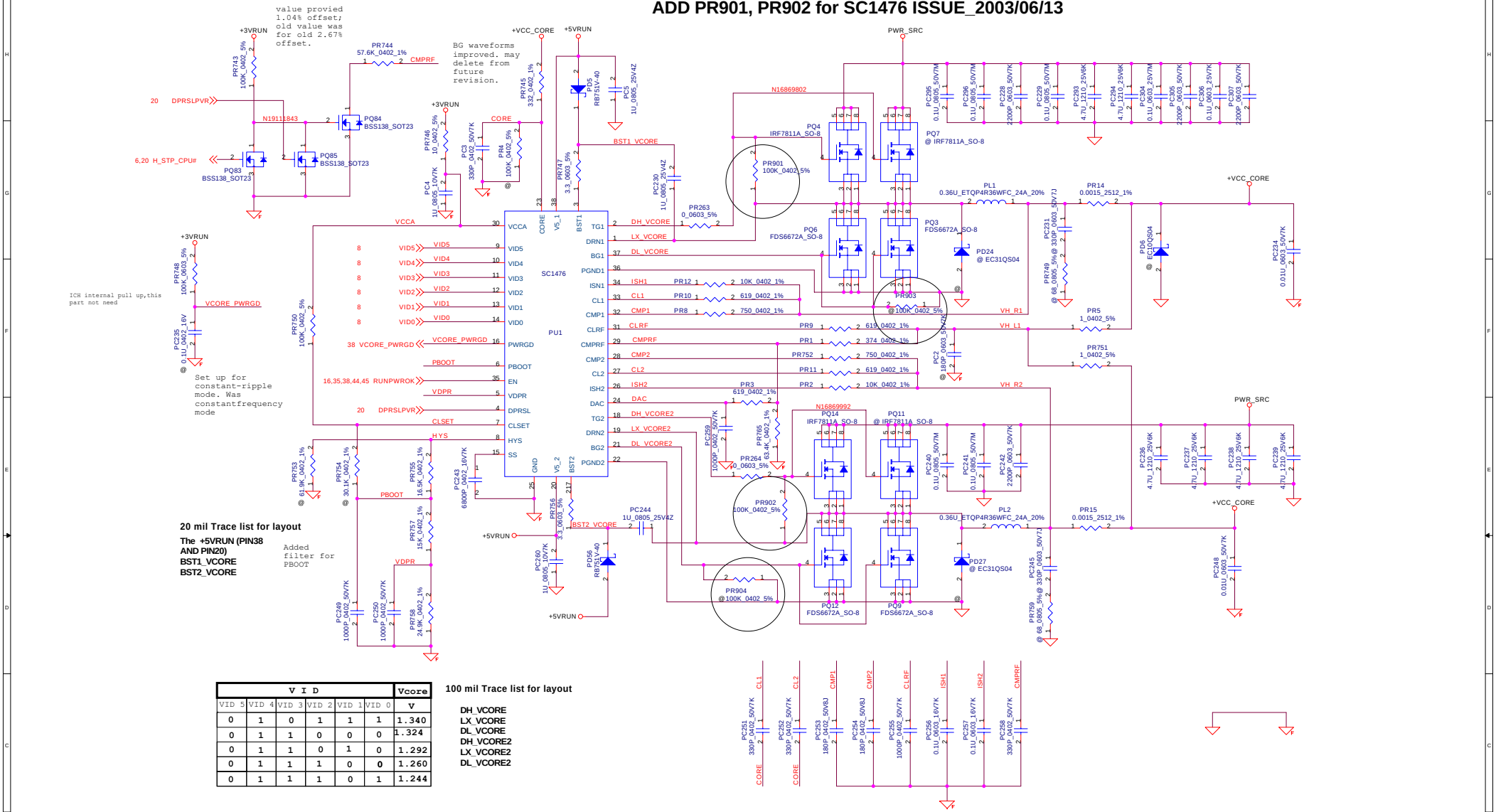

VID						Vcore
VID 5	VID 4	VID 3	VID 2	VID 1	VID 0	V
0	1	0	1	1	1	1.340
0	1	1	0	0	0	1.324
0	1	1	0	1	0	1.292
0	1	1	1	0	0	1.260
0	1	1	1	0	1	1.244

100 mil Trace list for layout

DH_VCORE
LX_VCORE
DL_VCORE
DH_VCORE2
LX_VCORE2
DL_VCORE2

DELL CONFIDENTIAL/PROPRIETARY

Compal Electronics, Inc.

Title: SCHEM,PLN,MN,KAPALUA II VCC_CORE

Size | Document Number: DDQ12/11/01 with LA-1901 | Rev 1.0

Date: Thursday, July 03, 2003 | Sheet 47 of 58

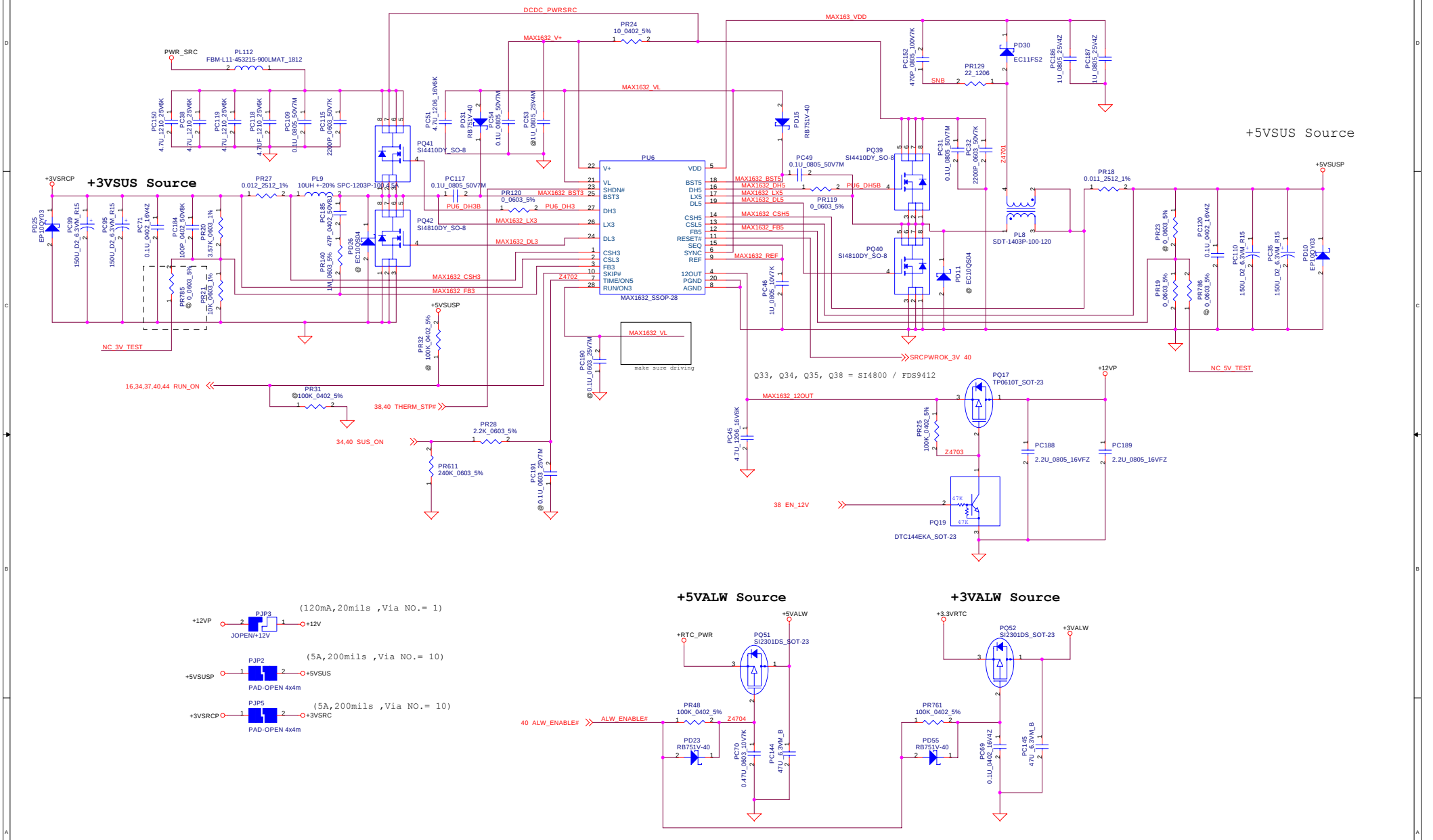

DELL CONFIDENTIAL/PROPRIETARY

Compal Electronics, Inc.

Title: SCHEM,PLN,MN,KAPALUA II DC to DC

Size | Document Number: DDQ12/11/01 with LA-1901 | Rev 1.0

Date: Thursday, July 03, 2003 | Sheet 48 of 58

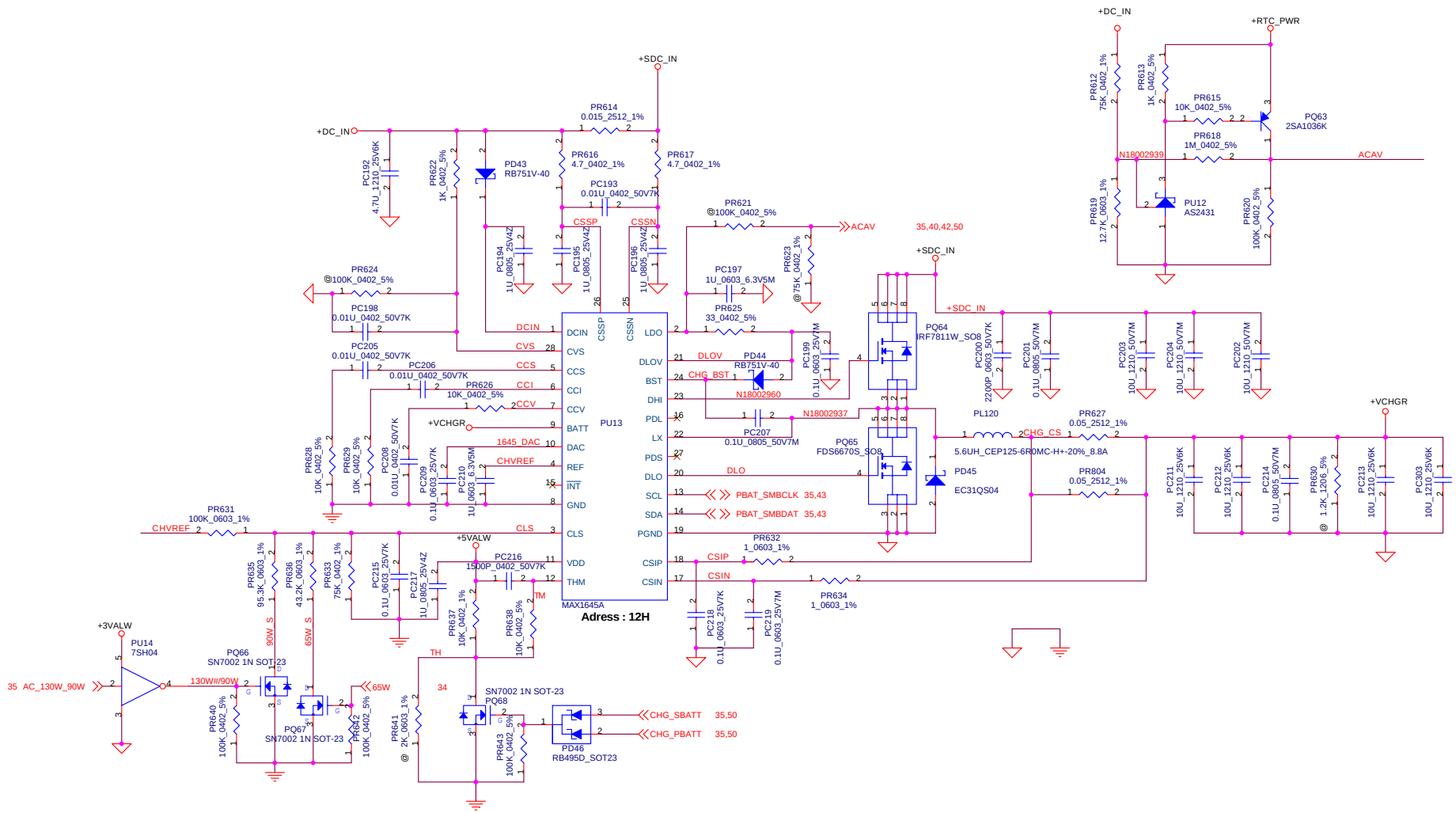

	65W (2.93A)	90W (4.0A)	130W (5.85A)
65W	H	L	L
AC_130W_90W	H	L	H

DELL CONFIDENTIAL/PROPRIETARY

Compal Electronics, Inc.

Title: SCHEM,PLN,MN,KAPALUA II CHARGER CONTROL

Size | Document Number: DDQ12/11/01 with LA-1901 | Rev 1.0

Date: Thursday, July 03, 2003 | Sheet 49 of 58

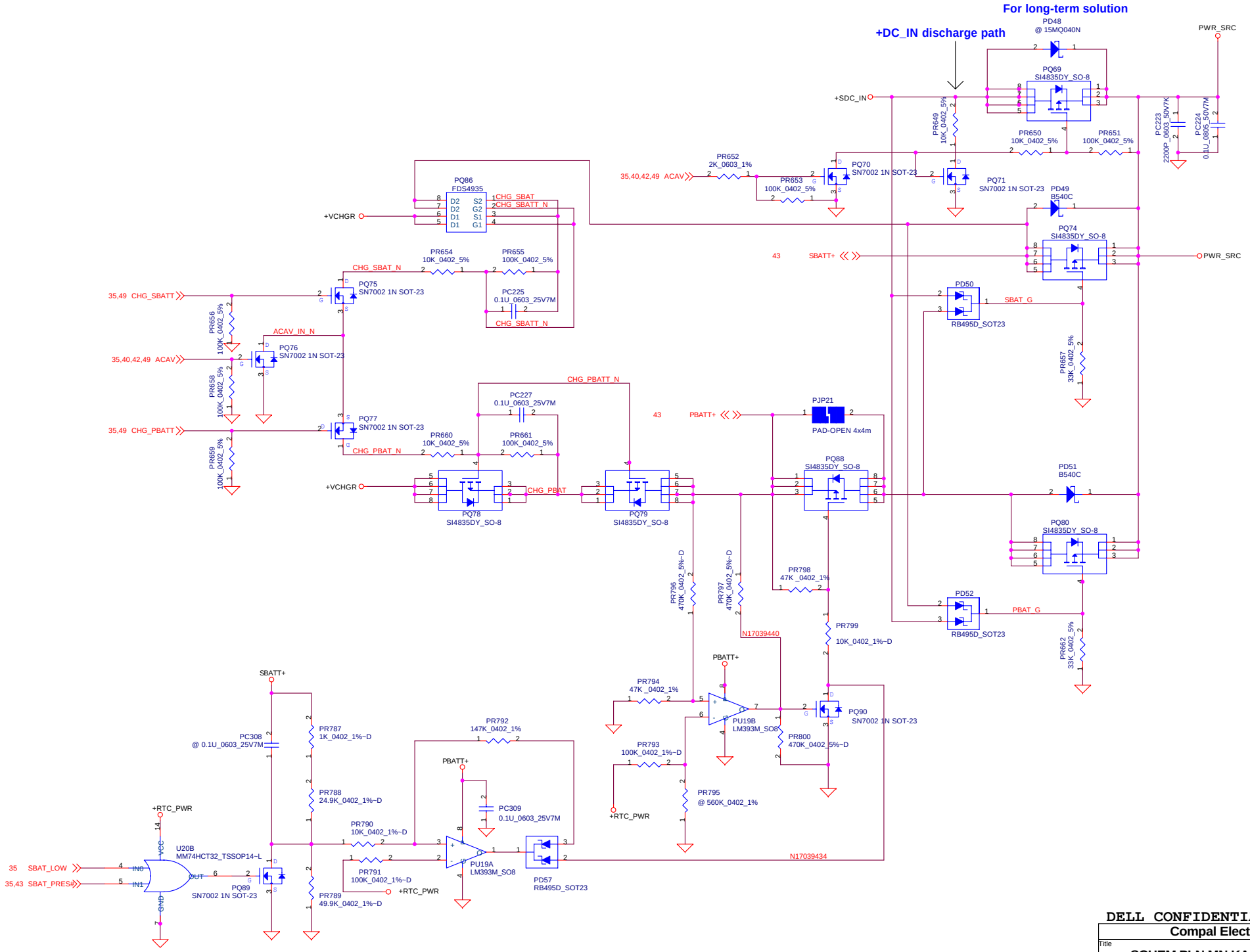

DELL CONFIDENTIAL/PROPRIETARY

Compal Electronics, Inc.

Title	SCHEM,PLN,MN,KAPALUA II CHARGER
Size	Document Number: DDQ12/11/01 with LA-1901
Rev	1.0
Date:	Thursday, July 03, 2003
Sheet	50 of 58

Version Change List (P. I. R. List)

Item	Page#	Title	Date	Request Owner	Issue Description	Solution Description	Rev.
1	27	Ethernet	8/18/2002	Dell	R318 use the same value as Lindbergh	R318 change the value from 1240Ω to 1140Ω	X00
2	27	Ethernet	8/18/2002	Dell	Netname change for A-2 chip	Change netname from 4401_CLOCKRUN to 7705M_CLOCKRUN	X00
3	27	Ethernet	8/18/2002	Dell	Populate R549 for 5705m controller	5702 controller do not need to change	X00
4	27	Ethernet	8/18/2002	Dell	Delete "POP SMBUS ISOLATION FOR 5702" text	Delete text	X00
5	28	LAN Transformer	8/18/2002	Dell	No need for RN1 pins 1,2,3,4 to ground connection	Delete RN1 pins 1,2,3,4 to ground connection	X00
6	28	LAN Transformer	8/18/2002	Dell	Delete the net name LIN_1000# and rename net of Pin G12 of U1A, Page 27, to DOCK_LED_1000#	Delete the net name LIN_1000#, rename net of Pin G12 of U1A to DOCK_LED_1000#	X00
7	8	Banias Processor	8/20/2002	Dell	PJP11 & PJP16 text discribe error	Change PJP11 to Short, and PJP16 to Open.	X00
8	27	Ethernet	8/20/2002	Dell	So for now we can use 1150 Ohm 1% resistor for R318 and we will continue with the 5702 controller	R318 change the value from 1140Ω to 1150Ω	X00
9	31	MINI PCI	8/20/2002	Dell	Change pin 17 of JPCI from PCI_PIRQB#to PCI_PIRQD#	Change pin 17 of JPCI connection to PCI_PIRQD#	X00
10	42	Power DC-IN	8/20/2002	Dell	Change PQ32, PR73, PR74, PR77 to NP	Updated PQ32, PR73, PR74, PR77 to NP	X00
11	1	Cover page	8/22/2002	Dell	On the title page place the name of the project Kapalua	Updated Schematic cover page text	X00
12	27	Ethernet	8/23/2002	Dell	Changed netname from 7705M_CLOCKRUN to 5705M_CLOCKRUN	Updated netname from 7705M_CLOCKRUN to 5705M_CLOCKRUN	X00
13	28	LAN Transformer	8/23/2002	Dell	Add 0Ω (0402 resistors) resistors to LAN_TX0-/LAN_TX0+, LAN_RX1-, LAN_RX1+, LAN_TX2-, LAN_TX2+, LAN_TX3-, LAN_TX3+	Add R776, R777, R778, R779, R780, R781, R782 and R783	X00
14	40	Power Control	8/29/2002	Dell	Using wrong Control signal of 1.8V rail drain on Q85.2	change the control signal of 1.8V rail drain from RUN_ON# to RUN_ON	X00
15	44	1.8V / 1.2V	8/29/2002	Compal	Change the control signal of 1.2VRUN from RUN_ON to RUNPWROK	Add PR766 connect to RUNPWROK, and reserved PR720 to NP	X00
16	47	Vcc_core	9/03/2002	Dell	Banias update PBOOT voltage spec with 1.2V	change PR755 to 16.5K and PR757 to 15K	X00
17	40	Power Control	9/04/2002	Compal	System doesn't work in using battery only	change R606 value from 470K to 200K	X00
18	40	Power Control	9/04/2002	Compal	Reduce +3VSUS power rail up response time and solve unexpected step waveform	Depoplate C680	X00
19	16	VGA Board	9/04/2002	Compal	VGA no reference voltage detected	Poplate R124	X00
20	45	1.5V / 1.05V	9/05/2002	Compal	SUSPWROK_1P5V control signal detected glitch issue	Add PR767 and reserved PR742 to NP	X00
21	46	1.25V / 2.5V	9/05/2002	Compal	SUSPWROK_1P5V control signal detected glitch issue	Add PR768 and reserved PR605 to NP	X00
22	40	Power Control	9/26/2002	Dell	Fixes the 3VSRC to 3VRUN leakage problem	Change R603 to 22Ω	X01
23	40	Power Control	9/26/2002	Dell	We need a Soft Start feature	Add C680 to 0.1uF	X01
24	20	ICH4-M	9/26/2002	Dell	Change Board Rev resistor to X01	Depopp R287, and Pop R286	X01
25	45	1.5V / 1.05V	9/26/2002	Dell	Add 0 ohm resistor at PU18 pin 15 and pin 16	Add PR769 and PR770 to 0Ω	X01
26	46	1.25V / 2.5V	9/26/2002	Dell	Add a 0 Ohm resistor at PU11 pin 15	Add PR771 to 0Ω	X01

Version Change List (P. I. R. List)

Item	Page#	Title	Date	Request Owner	Issue Description	Solution Description	Rev.
27	28	NIC high po issue	10/17/2002	DELL	Hi-pot test fail because RN1 pitch too close	change RN1 to R785~r788 to enlarge the pitch	X01
28	26	Add PD for BT	10/17/2002	DELL	leverage from LK	Add R789 10K PD to COEX1_BT_ACTIVE	X01
29	25	Dog h power rating	10/17/2002	Compal	The current rating of MOS and Bead is too small in Dog house	change Q1,F1,F2,L25 part to meet Doghouse power current requirement (F1&F2 create new symbol now)	X01
30	13	Fan soft start	10/17/2002	Compal	No soft start will cause +5VRUN droop low	change C127 and C110 pop(don't do it per Bo's command)	X01
31	22	cd audio pull down	10/18/2002	Compal	when we don't plug in CDrom, audio trace will floating	add R, R to tie the INT_CD_L/R ground	X01
32	22	reserve series ATA	10/18/2002	DELL	change some power/gnd to NC for reserve series ATA interface for module bay	change JMOD1pin8,10,14,16,9,11, to NC,conecct SATA_DET# to pin13	X01
33	20,22,34	add SATA detect	10/18/2002	DELL	Add series ATA detect in module bay	Add net sdat_det# from module bay to EC and remove original sio_lid_ec#	X01
34	31	change MINI PCI pin NC	10/18/2002	DELL	change MINI-PCI pin NC (No use)	Change JPCI pin109 and pin 123 to NC and remove R457,C576	X01
35	22	cr_ref return cap.	10/18/2002	DELL	add a pull down cap. for cd_ref near JMOD	Add C from CD_REF to gnd near JMOD and let it unpop	X01
36	29	Reserve PCMCIA suspend pin	10/18/2002	DELL	Reserve PCMCIA suspend pin not use	depop D11 and reserve it for TI_SUSPEND#	X01
37	40	Power Q-SW	10/18/2002	DELL	Lindberg change Q12,Q55,Q77 to big rating, we will wait the EA report and make a decision	TBD	X01
38	38	Add 1.8V PWRGD	10/18/2002	DELL	Add the 1.8V power good to power sequence	change the U12 pin 13 from RUN_ON to 1P8V_PWRGD	X01
40	25,34	change DH enable	10/22/2002	DELL	change dog house power enable pin independent	Add R and R seprate the control signal of DH	X01
41	10	change to normal part	10/22/2002	Compal	change to vender normal specification part	change C743 and C744 from 50V to 16V rating	X01
42	31	remove pin of MINI-PCI	10/24/2002	DELL	change pin def. of MINI-PCI	romove pin 118, 120 ground for JPCI	X01
43	42	remove some PS_ID	10/24/2002	DELL	remove some reserve PS_ID component	Remove PQ32, PR77, PR74, PR73	X01
44	26,31	duplicate pull down	10/24/2002	DELL	remove duplicate pull down	Remove R789 , only use R767	X01
45	29	remove not use part	10/24/2002	DELL	remove the reserve part for carrbus controller	Delete R185	X01
46	38	change the thermaltrip	10/24/2002	DELL	change the thermal shut down solution from MAX to discrete	del U6, R30, R24, add U2, C29, R28, R20~R23, C27, R53, C65	X01
47	28	ESD Safty issue	10/24/2002	Compal	JPH_RJ layout change connection from GND to NC.	JPH_RJ pin 6 change connection from GND to NC.	X01
48	40	+3VRUN, +3VSUS FET ISSUE	10/25/2002	DELL	+3VSUS AND +3VRUN POWER RAIL MOSFET PARTS CHANGED	Q12 AND Q77 CHANGE PARTS FROM SI3456 TO SI4810	X01
49	33	RGB Beads value changed	10/25/2002	DELL	Using 0Ω instead of beads	Change the value of L101, L102, L103, L14, L15, L16, L17, L18	X01
50	33	Rev. changed	10/25/2002	Compal	PI3L301A revision change to PI3L301BA	U30 Rev. changed	X01
51	25	Dog House	10/29/2002	DELL	Must Design as Lindberg	R25 changed value to 100K and R26 (10K) change to C940 (0.022u_0805)	X01
52	9,12,15	Bulk Cap.	10/29/2002	Compal	Height Restriction	Changed Height limit of C933,C934,C731,C779,C788,C789 to 1.9mm	X01
53	9	CPU Bypass	10/29/2002	DELL	Changed Voltage Limit of Bulk Cap. to 2V	C671~C675,C678 Changed Voltage Limit to 2V	X01

DELL CONFIDENTIAL/PROPRIETARY

Version Change List (P. I. R. List)

Item	Page#	Title	Date	Request Owner	Issue Description	Solution Description	Rev.
54	41	PAD & ME Parts	10/30/2002	Compal	Need to BLOW OUT 2.5mm Radius from Vias used to transition Tip and Ring from InnerLayer 4 to Bottom layer	Deleted H43 to meet 2.5mm Radius gap	X01
55	28	Magnetic & RJ45	10/30/2002	DELL	LAN Analog Switch (PI3L301BA) serial Resistors change type to Inductors	R776~R783 changed value from 0Ω to 15nH Inductor (TDK MLK1005S15NJ)	X01
56	27	POP option to 5705	11/08/2002	Compal	change the POP option from 5702 to 5705	Depop L66, C344, C324 Pop R217, R549	X01
57	38	Thermal shut down to 6509	11/08/2002	DELL	change the thermal shut down solution from discrete to MAX	Add U6, R30, R24 Depop U2, C29, R28, R20~R23, C27, R53, C65	X01
58	27	LOM	11/27/2002	Compal	Depop dummy parts	Depop R388 (10K_0402) and C390 (0.01U_0402)	X02
59	41	PAD, ME, SPARE PARTS	11/27/2002	Compal	Add Cost-BOM parts	Add Z1(Switch-FPC), Z2(Touch_pad-FPC), Z3(MDC-Cable), Z4(Spk-mODULE), Z5(BT_Cable).	X02
60	9	Vcore Bypass CAP.	11/29/2002	Compal	Vcore by pass capacitors adjust for cost	Add C941~C944 (220UF_2V) Depop C671~C675, C678 (220UF_2V)	X02
61	40	Power Control	11/29/2002	Compal	package change for increase voltage tolerance	C680 changed package from 0402 to 0603	X02
62	20	ICH4	12/02/2002	Compal	Depop dummy part	Depop R529 (10K_0402)	X02
63	25	Dog House	12/04/2002	Compal	package change for conponent easy to buy	C940 changed package from 0805 to 0603	X02
64	30	Smart Card	12/11/2002	DELL	Need to implement 5 Smart Card changes.	Add R12, R26, C184 , C189 , Change C171 value from 390P to 470P	X02
65	27	BCM5705 By Pass	12/11/2002	DELL	Need to change package from 0805(4.7UF) to 1206(10UF) for cost	C339, C346, C352, C355, C393, C662, C368, C342	X02
66	All Pages	Page Symbol	12/13/2002	DELL	Put "DELL CONFIDENTIAL/PROPRIETARY" on Schematics	DELL CONFIDENTIAL/PROPRIETARY	X02
67	20	ICH4	12/13/2002	Compal	Delay Thermtrip to ICH4 so Intruder have time to get latch	Add C46 (0.1UF_0402)	X02
68	38	Thermtrip	12/17/2002	DELL	For Charger Selector Used (SIO_THERM_PWRDN net changed to SBAT_LOW)	Delete R206 & Q22	X02
69	27	BCM5705	12/17/2002	DELL	Delete 4401 Conponents	Delete U43, R388, C390, R367, R368	X02
70	28	LAN Transformer	12/17/2002	DELL	Delete 4401 Conponents	Delete R551 ~ R554	X02
71	28	LAN Transformer	12/18/2002	DELL	Changed Spec 2KV to 3KV	C1	X02
72	17	TV OUT	12/18/2002	DELL	Depop C14 for Cost	Depop C14	X02
73	33	DOCKING CONN.	12/18/2002	DELL	Remove RGB Bead	Delete L101, L102, L103, L14 ~ L18 & Trace	X02
74	23	AC,97 CODEC	12/18/2002	Compal	Added Resistors for TPS793475 LDO	Add R792, R793 (@)	X02
75	23	AC,97 CODEC	12/18/2002	DELL	Change the Value from 0 ohm to 1UF_0805	C636	X02
76	17	TV OUT	12/18/2002	DELL	Change RGB Bead Value & Package	Changed L5, L104, L105	X02
77	35	SIO	12/18/2002	Compal	ESD Cap is Needed on Reset to McCallen	Add D74 for ESD (@)	X02
78	30	Smart Card	12/19/2002	DELL	Added Cap (4.7uF_0805) for SCR_VCC_C to Depop	Add C945 for depop (@)	X02
79	17	TV OUT	12/19/2002	Compal	Depop C10, C11, C661 for RGB Signals	Depop C10, C11, C661(@)	X02

Version Change List (P. I. R. List)

Item	Page#	Title	Date	Request Owner	Issue Description	Solution Description	Rev.
80	40	Power Control	12/19/2002	Dell	Change ALW_ENABLE# control methos through OR gate	Added R794, R795, R796	X02
81	38	Thermtrip	12/19/2002	Dell	THERM_PWRDN add RC delay	Added R798, C946	X02
82	26	MDC, BT	12/19/2002	Dell	Pop JPT pin 7 resistor	Added R765	X02
83	35	SIO	12/19/2002	Dell	SBAT_LOW pull-up through 4.7K resistor	Added R797	X02
84	24	Phone JACK	12/20/2002	Dell	R252 to be connected to EXT_MIC_PLUG instead of EXTMIC_PLUG	R252	X02
85	24	Phone JACK	12/20/2002	Dell	add a 100PF cap to GND on Sheet 24 on the EXTMIC_PLUG so that signal is terminated as well for protection purposes	Added C947	X02
86	35	SIO	12/20/2002	Compal	To prevent ACAV from leaking Current for OTP event	Added R799, R800 & ACAV through AND gate	X02
87	20	ICH4M	12/20/2002	Dell	Board ID X02	Pop R278, R287 & Depop R279, R286	X02
88	35	SIO	12/20/2002	Dell	Add Battery Selector Circuit	U27.H13 netname changed to SBAT_LOW	X02
89	28	Magantic	12/21/2002	Dell	Change Magantic vendor to Transpower	L24 (GB1G04-T)	X02
90	19	ICH4	01/02/2003	Compal	Change RTC 32.768KHz Crystal to 10ppm	X5	X02
91	09,12,15	CPU,Odem,DDR bypass	01/03/2003	Dell	Reduce Component Hight from 3.1mm to 2.8mm	C78, C796, C910, C935, C936	X02
92	19	ICH4	01/07/2003	Compal	Change Cap Value from 15pF to 12pF to Improve Frequency Tolerance	C581, C586	X02
93	21	ICH4	01/07/2003	Dell	Change Cap Height Dimension for placing Height Restriction Area	C585	X02
94	20	ICH4	01/20/2003	Dell	Change Board ID to X03	Pop R286 Depop R287	X03
95	39	JLID	01/20/2003	Compal	Change for Switch-Board EMI solution	Depop R214	X03
96	35	SIO	01/22/2003	Compal	Change Footprint for ESD	D74 (@)	X03
97	27	LOM	01/30/2003	Dell	Change Resister Value for RDAC	R318 (1.18K)	X03
98	38	Thermtrip	01/30/2003	Dell	Change Trip Temperature Point to 86 C for OTP	R24 (22.6K)	X03
99	28	Magantic	01/30/2003	Compal	Added Pull Down Resister to prevent LOM LED from doing abnormal behavior.	Added R400, R401, R402	X03
100	17	TV-Out / CRT	02/06/2003	Dell	CRT H/V sync Need to NO-POP	Depop R6, R16	X03
101	25	USB 2.0	02/06/2003	Dell	Reduce Component Hight from 3.1mm to 2.8mm	C300, C304, C329	X03
102	27	LOM	01/30/2003	Dell	Back to The Original Resister Value for RDAC	R318 (1.15K)	X03
103	38	Thermtrip	02/12/2003	Dell	Change Trip Temperature Point to 84.5 Degree C for OTP	R24 (24K)	X03
104	20	ICH4M	02/17/2003	Dell	Changed Board ID to A00	Pop R279, R280, R287 & Depop R278, R281, R286	A00
105	28	Magantic	02/17/2003	Dell	Changed Reversion of LAN Analog Switch to Rev:D	U30	A00

DELL CONFIDENTIAL/PROPRIETARY

Version Change List (P. I. R. List)

Item	Page#	Title	Date	Request Owner	Issue Description	Solution Description	Rev.
106	27	LOM	02/11/2003	Dell	Added 4401 Optional Circuit	Added U43, R367, R368, R388, C390 (1@)	X00
107	25	USB 2.0	02/11/2003	Compal	DH_PWRSRC_OC Pull-Down for L2	Added R403 (1@)	X00
108	25	USB/DH	02/11/2003	Dell	Added TPS2042 to Replace TPS2043 for Lindbergh2	Added U70 (1@)	X00
109	34	SIO	02/12/2003	Compal	PR65 Has Wrong Naming Rule and Have to Rename to R405	Deleted PR65 Added R405	X00
110	27	LOM	02/18/2003	Dell	Need to Add Pin A7 with Bead for +3VRUN and +V_3P3_LAN	Added L109(1@), L110(2@)	X00
111	28	Magnetic	03/11/2003	Compal	LAN Anolog Switch Pin 14 Changed to NC	U30	X00
112	25	USB/DH	03/18/2003	Dell	put the pads for zero ohms pop options for L21, L22 , L23, L28, L41, L13 common mode choke.	Added R348~R359 (@)	X00
113	27	LOM	03/18/2003	Dell	1K for 4401 and 4.7K for 5705M [Overlap with R317(2@)]	Added R317 (1@)	X00
114	20	ICH4M	03/18/2003	Compal	Board ID X00 (LBK-Adds)	Pop R267, R281, R279, R287 Depop R286, R278, R280, R266	X00
115	25	USB/DH	03/25/2003	Dell	ESD diodes for the DH_SMbus	Added D30 (@)	X00
116	34	SIO	04/01/2003	Dell	MiniVU Future Platform Requirements	Added Q100, R360, R361 (@)	X00
117	17	TV Out	04/04/2003	Compal	Put the Pads in to Reserve the Possiblity of Removing the Transformer (L57) in the Future	Added L126 (@)	X00
118	06, 23	CLOCK Gen / CODEC	04/07/2003	Dell	Remove 24.576MHz Crystal for Codec	Added R551~R553, C560. Depop X7, C616 (@). C622 (22P to 0 ohm)	X00
119	25	USB/DH	04/23/2003	Dell	ESD diodes for the DH_SMbus (Pop Option Implement)	Pop D30 (2@)	X00
120	34	SIO	04/23/2003	Dell	MiniVU Future Platform Requirements	Pop Q100, R360, R361	X00
121	41	PAD	04/29/2003	Compal	EMI CLP21 have chance to short test point.	Depop CLP21	X00
122	32, 33	Docking	04/29/2003	Dell	DOCK PCI Components Removed for Lindbergh Series	U34, U35, u36,C40, C659, U3, R36, C31, U14, U17, U18 (All for 2@)	X00
123	20	ICH4M	05/29/2003	Compal	For the DPRSLPVR issue	Added R460 (100K)	X01
124	20	ICH4M	05/29/2003	Compal	Board ID X01 (LBK-Adds)	Pop R286 Depop R287	X01
125	27	LOM	06/05/2003	Dell	RDAC 1.18K for 4401 and 1.15K for 5705M	R318	X01
126	20	ICH4M	06/13/2003	Compal	Board ID A00 (LBK-Adds)	Pop R287, R278 and depop R286, R279	A00
127	25	USB 2.0	06/18/2003	Dell	Using 0 ohm resistor to substitute common choke	Pop R348~R359 and depop L21, L41, L22, L23, L28, L13	A00
128	13	ITP Debug CONN. & FAN	06/18/2003	Compal	Change pullup R42, R43 to 2.2K to fix SMBus issue	R42, R43	A00
129	6	Clock Gen.	06/18/2003	Compal	Change R98 and R551 to 10ohm to meet SMSc spec.	R98, R551	A00
130	23	AC97	06/18/2003	Dell	Change R284 to 49.9ohm for modem issue with BitCLK issue	R284	A00
131	28	LAN TRANSFORMER	06/18/2003	Dell	Add diode to LAN_ACTLED to prevent damage to the LAN chipset through backdrive	Add D75	A00

DELL CONFIDENTIAL/PROPRIETARY

Version Change List (P. I. R. List)

Item	Page#	Title	Date	Request Owner	Issue Description	Solution Description	Rev.
132	28	LAN TRANSFORMER	06/18/2003	Dell	Change R374 to 150ohm for the brightness of LED	R374	A00
							A00

DELL CONFIDENTIAL/PROPRIETARY

Compal Electronics, Inc.	
Title	Changed-List History
Size	Document Number: DDQ12/11/01 with LA-1901 — Rev 1.0
Date: Thursday, July 03, 2003	Sheet 56 of 58

Version Change List (P. I. R. List) for Power Circuit

Item	Page#	Title	Date	Request Owner	Issue Description	Solution Description	Rev.
1	42	Power DC-IN	8/20/2002	Dell	Change PQ32, PR73, PR74, PR77 to NP	R318 change the value from 1240Ω to 1140Ω	X00
2	44	1.8V / 1.2V	8/29/2002	Compal	Change the control signal of 1.2VRUN from RUN_ON to RUNPWROK	Change netname from 4401_CLOCKRUN to 7705M_CLOCKRUN	X00
3	47	Vcc_core	9/03/2002	Dell	Banias update PBOOT voltage spec with 1.2V	Change PR755 to 16.5K and PR757 to 15K	X00
4	45	1.5V / 1.05V	9/05/2002	Compal	SUSPWROK_1P5V control signal detected glitch issue	Add PR767 and reserved PR742 to NP	X00
5	46	1.25V / 2.5V	9/05/2002	Compal	SUSPWROK_1P5V control signal detected glitch issue	Add PR768 and reserved PR605 to NP	X00
6	45	1.5V / 1.05V	9/26/2002	Dell	Add 0 ohm resistor at PU18 pin 15 and pin 16	Add PR769 and PR770 to 0Ω	X01
7	46	1.25V / 2.5V	9/26/2002	Dell	Add a 0 Ohm resistor at PU11 pin 15	Add PR771 to 0Ω	X01
8	45	1.5V / 1.05V	10/17/2002	Compal	Turn off have glitch because +3VSUS issue, so pull high to +5VSUS can improved	Add PR780 to 10KΩ	X01
9	45	1.5V / 1.05V	10/17/2002	Compal	Intersil Issue can solved by Fairchild solution Change the control signal of 1.05VSUS from RUNPWROK to SUSPWROK_5V	Add PR772, PR773 and change PC282 to 0.01U_0805 size	X01
10	44	1.8V / 1.2V	10/17/2002	Dell	Change the 1.8VRUN Regulator from CM3718 to MAX1927	Change +1.8V Regulator	X01
11	45	1.5V / 1.05V	10/17/2002	Dell	+1.5VSUS POWER GOOD ISSUE	change PL124 to 5.0U_20%_3.0A to 4.7U_20%_3.9A	X01
12	44-48	All Regulaters	10/17/2002	Dell	Add test point for DELL testing	Add PR778, PR783, PR784, PR781, PR782, PR785, PR786 to NP for Test point	X01
13	49	Battery charger	10/23/2002	Dell	Fast Charger for short time and Cost-Down	Add P303 and Change PC202, PC203, PC204, PC211, PC212, PC213 to 10U_1210 and Delete PU15's circuit Change PR636 to 43.2K ohms for 65W Adpater plug in	X01
14	45	1.5V / 1.05V	10/23/2002	Dell	Change OCSETt and SEN Resistor	change PR735, PR736 to 75K ohms, Change PR727 to 330 ohms, Change PR728 to 634 ohms	X01
15	47	Vcc_core	10/28/2002	Dell	Cost-Down and change deepsleep offset	Change PR744, PC243, PC251, PC252, PR765 For adjusts slope and sleep offset PQ7, PQ11, PD24, PD27 to NP for Cost-Down	X01
16	47	Vcc_core	10/28/2002	Dell	EMI Broad band ISSUE	Add PC304 PC306 to 0.1U, Add PC305 PC307 to 2200P change PR747 PR756 to 3.3 ohms	X01
17	50	PWR_Selector	11/14/2002	Compal	Charger selector ISSUE	Add PR649, Del PD48,Change PD49 PD51 to B540C and Change PR657 PR662 to 33K	X02
18	42	Power DC-IN	11/20/2002	Dell	AC-IN Detect Issue	Change PR70 to 4.7K	X02
19	49	Battery charger	11/26/2002	Dell	Charger Current to 5.3A	Change PR627 to 28m ohms	X02

DELL CONFIDENTIAL/PROPRIETARY

Version Change List (P. I. R. List) for Power Circuit

Item	Page#	Title	Date	Request Owner	Issue Description	Solution Description	Rev.
20	47	Vcc_core	11/29/2002	Compal	Delete V-core Cap for Cost-Down	Delete PC232 PC233 PC246 PC247 for Cost-Down	X02
21	50	PWR_Selector	12/16/2002	Dell	New Battery selector switch design to sopport secondry battery discharge before primary	Delete PQ72, PQ73 Change PQ86 to Dual-Mosfet ,Add PQ88 Mosfet Add PU19, PC308, PC309, U20B, PQ89, PQ90, PD57 And PR787, PR788, PR789, PR790, PR791, PR792, PR793 PR794, PR795@, PR796, PR797, PR798, PR799, PR800	X02
22	42	Power DC-IN	12/17/2002	Dell	EFT Issue and Dell request	Add PQ91, PD58 PR762 to depop	X02
23	42	Power DC-IN	12/18/2002	Compal	EFT Issue	Add PR801 to depop	X02
24	42	Power DC-IN	12/19/2002	Dell	Added PS_ID Pull-up	Add PR802 (4.7K_0402)@	X02
25	42	Power DC-IN	12/19/2002	Dell	Added +DC_IN 10K_0805 Pull-down to GND to solve potential adapter insertion secqurncing issue	Add PR803 (10K_0805)	X02
26	49	Chaqrger	12/20/2002	Dell	Added mΩ resistor in palleal with PR627 to support 6.0Amp maximun charging current	Add PR804 0.05mΩ_2512)	X02
27	49	Chaqrger	12/20/2002	Dell	Changed the Value of PR627 from 0.028 to 0.05	PR627 chande to 50m ohms	X02
28	44	1.8V / 1.2V	12/20/2002	Compal	Prevent 3.3ALW voltage droop during OTP & ThermTrip shutdown	Added PU20 (@)	X02
29	49	Chaqrger	12/20/2002	Dell	Changed the Value of PL120 from 6.0U to 5.6U	PL120 chande to 5.6UH_+-20%_8.8A	X02
30	42	Power DC-IN	12/20/2002	Dell	Prevent Bondi PS_ID Pin Issue	Add PR762 and PQ91@	X02
31	42	Power DC-IN	12/31/2002	Compal	Change SI4435 to SI4825 to Increase Design Margin	PQ1	X02
32	42	Power DC-IN	01/22/2003	Dell	Prevent Bondi PS_ID Pin Issue	Pop PQ91, PR802 Depop PR762	X03
33	42	Power DC-IN	01/22/2003	Compal	Change Footprint	PD58	X03
34	45	1.5V / 1.05V	01/30/2003	Dell	ISL6225B swing issue	Change PU11, PU18 to ISL6225CA & PC285 to 330uF_2.5V_15mΩ Depop PR730, Pop PR734 to 0Ω	X03
35	43	Battery Conn.	03/05/2003	Dell	To Use Common Part as Bondi (Change PN to DC04001440L)	JSBAT	A00
36	49	Chaqrger	03/05/2003	Compal	To Reduce RTC Bridge Battery Leakage Current (Changed Power Plane from +RTC_PWR to +5VALW)	PU13. PC216, PR637, PC217, Depop PR641	A01
37	42	Power DC-IN	04/07/2003	Dell	Reserve zero ohm bypass resistor for Rbatt fuse	Adding PR850(@)	X00
38	42	Power DC-IN	04/07/2003	Dell	Fuse PFS2 Removed and Diode PD3 Shorted. The RBAT Blow Up (200 deg F). POP the Fuse instead of the 0hom resister.	Pop PFS2 Depop PR850	X00
39	45	1.5V / 1.05V	04/23/2003	Dell	Increased OCP for S3 Issue. (330Ω to 732Ω)	PR727	X00
40	47	Vcc_core	06/13/2003	Dell	CPU_core PWM SC1476 IC issue	Adding PR901, PR902 to 100K, PR903(@) PR904(@)	A00

DELL CONFIDENTIAL/PROPRIETARY