Compal Confidential

PAV70 DDR3 Schematics Document

Intel Pineview Processor with Tigerpoint + DDRIII

2010-06-25

REV: 1.0

Security Classification	Compal Secret Data		
Issued Date	2006/08/18	Deciphered Date	2007/8/18

THIS SHEET OF ENGINEERING DRAWING IS THE PROPRIETARY PROPERTY OF COMPAL ELECTRONICS, INC. AND CONTAINS CONFIDENTIAL AND TRADE SECRET INFORMATION. THIS SHEET MAY NOT BE TRANSFERED FROM THE CUSTODY OF THE COMPETENT DIVISION OF R&D DEPARTMENT EXCEPT AS AUTHORIZED BY COMPAL ELECTRONICS, INC. NEITHER THIS SHEET NOR THE INFORMATION IT CONTAINS MAY BE USED BY OR DISCLOSED TO ANY THIRD PARTY WITHOUT PRIOR WRITTEN CONSENT OF COMPAL ELECTRONICS, INC.

Compal Electronics, Inc.

Title	Cover Page	
Size B	Document Number LA-6421P	Rev 0.1
Date: Friday, June 25, 2010	Sheet 1 of 39	

Compal Confidential

Model Name : PAV50
File Name : LA-6421P

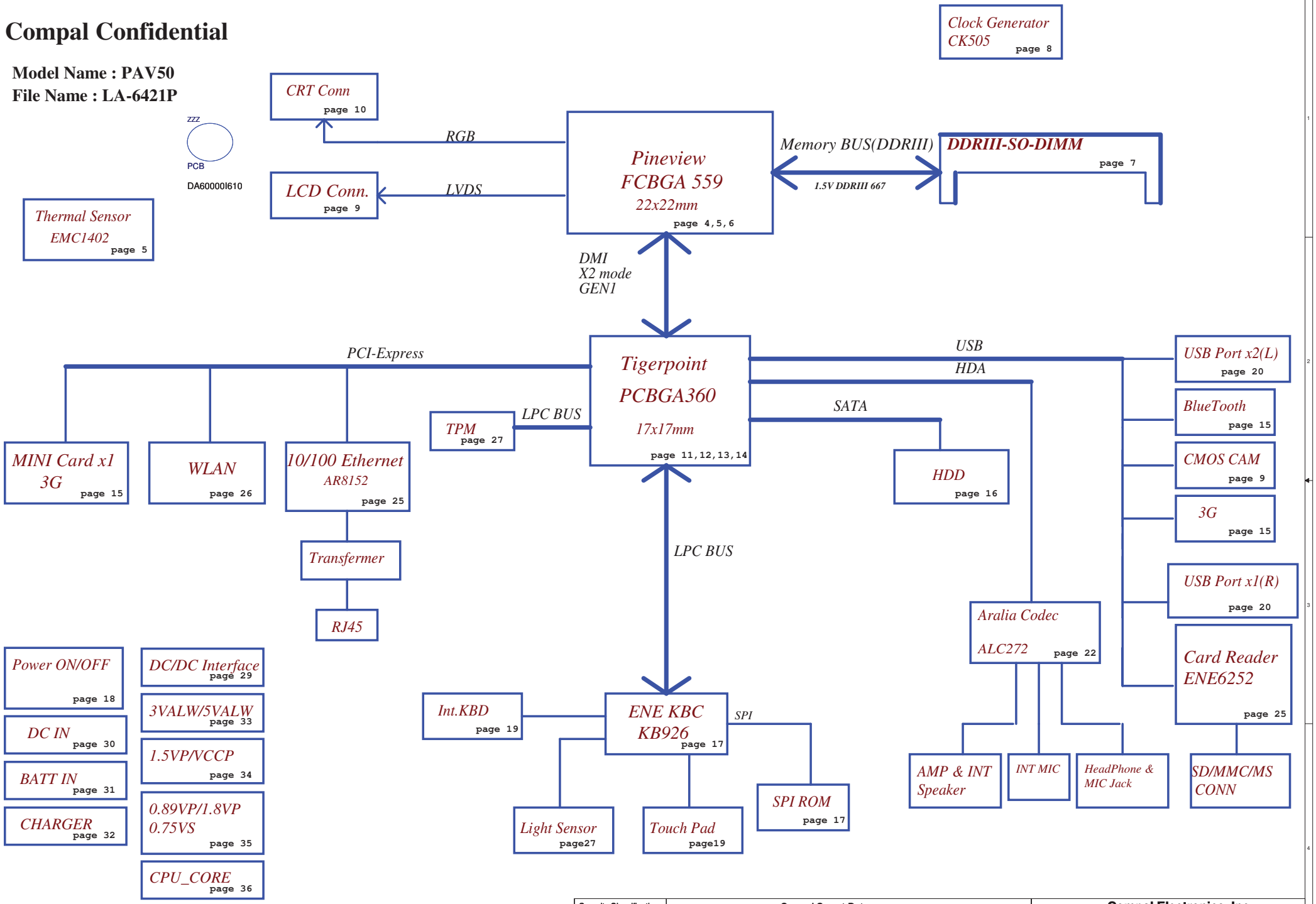

Security Classification	Compal Secret Data		
Issued Date	2006/08/18	Deciphered Date	2007/8/18

THIS SHEET OF ENGINEERING DRAWING IS THE PROPRIETARY PROPERTY OF COMPAL ELECTRONICS, INC. AND CONTAINS CONFIDENTIAL AND TRADE SECRET INFORMATION. THIS SHEET MAY NOT BE TRANSFERED FROM THE CUSTODY OF THE COMPETENT DIVISION OF R&D DEPARTMENT EXCEPT AS AUTHORIZED BY COMPAL ELECTRONICS, INC. NEITHER THIS SHEET NOR THE INFORMATION IT CONTAINS MAY BE USED BY OR DISCLOSED TO ANY THIRD PARTY WITHOUT PRIOR WRITTEN CONSENT OF COMPAL ELECTRONICS, INC.

Compal Electronics, Inc.

Title: Block Diagrams

Size: B | Document Number: LA-6421P | Rev: 0.1

Date: Friday, June 25, 2010 | Sheet 2 of 39

Voltage Rails

Power Plane	Description	S1	S3	S5
VIN	Adapter power supply (19V)	N/A	N/A	N/A
B+	AC or battery power rail for power circuit.	N/A	N/A	N/A
+CPU_CORE	Core voltage for CPU	ON	OFF	OFF
+0.75VS	0.75V switched power rail for DDR terminator	ON	OFF	OFF
+VCCP	VCCP switched power rail	ON	OFF	OFF
+1.5VS	1.5V switched power rail	ON	OFF	OFF
+1.5V	1.5V power rail for DDR	ON	ON	OFF
+0.89V	Graphic core power rail	ON	OFF	OFF
+3VALW	3.3V always on power rail	ON	ON	ON*
+3VS	3.3V switched power rail	ON	OFF	OFF
+5VALW	5V always on power rail	ON	ON	ON*
+5VS	5V switched power rail	ON	OFF	OFF
+VSB	VSB always on power rail	ON	ON	ON*
+RTCVCC	RTC power	ON	ON	ON

Note : ON* means that this power plane is ON only with AC power available, otherwise it is OFF.

STATE \ SIGNAL	SLP_S3#	SLP_S4#	SLP_S5#	+VALW	+V	+VS	Clock
Full ON	HIGH	HIGH	HIGH	ON	ON	ON	ON
S1(Power On Suspend)	HIGH	HIGH	HIGH	ON	ON	ON	LOW
S3 (Suspend to RAM)	LOW	HIGH	HIGH	ON	ON	OFF	OFF
S4 (Suspend to Disk)	LOW	LOW	HIGH	ON	OFF	OFF	OFF
S5 (Soft OFF)	LOW	LOW	LOW	ON	OFF	OFF	OFF

BOARD ID Table(Page 17)

	VCC	3.3V				
	Ra	100K				
	ID	BRD ID	Rb	Vab-Min	Vab-Typ	Vab-Max
PAV50	0	R01 (EVT)	0	0V	0V	0V
	1	R02 (DVT)	8.2K	0.216V	0.250V	0.289V
	2	R03 (PVT)	18K	0.436V	0.503V	0.538V
	3	R10A (MP)	33K	0.712V	0.819V	0.875V
	4	R01 (EVT)	56K	1.036V	1.185V	1.264V
	5	R02 (DVT)	100K	1.453V	1.650V	1.759V
	6	R03 (PVT)	200K	1.935V	2.200V	2.341V
	7	R10A (MP)	NC	2.500V	3.3V	3.3V

External PCI Devices

DEVICE	IDSEL #	REQ/GNT #	PIRQ

No PCI Device

EC SM Bus1 address

Device	Address
Smart Battery	0001 011X b

EC SM Bus2 address

Device	Address
EMC1402	100_1100

ICH7M SM Bus address

Device	Address
Clock Generator (SLG8SP556VTR)	1101 001Xb
DDR DIMMA	1010 000Xb

THIS SHEET OF ENGINEERING DRAWING IS THE PROPRIETARY PROPERTY OF COMPAL ELECTRONICS, INC. AND CONTAINS CONFIDENTIAL AND TRADE SECRET INFORMATION. THIS SHEET MAY NOT BE TRANSFERED FROM THE CUSTODY OF THE COMPETENT DIVISION OF R&D DEPARTMENT EXCEPT AS AUTHORIZED BY COMPAL ELECTRONICS, INC. NEITHER THIS SHEET NOR THE INFORMATION IT CONTAINS MAY BE USED BY OR DISCLOSED TO ANY THIRD PARTY WITHOUT PRIOR WRITTEN CONSENT OF COMPAL ELECTRONICS, INC.

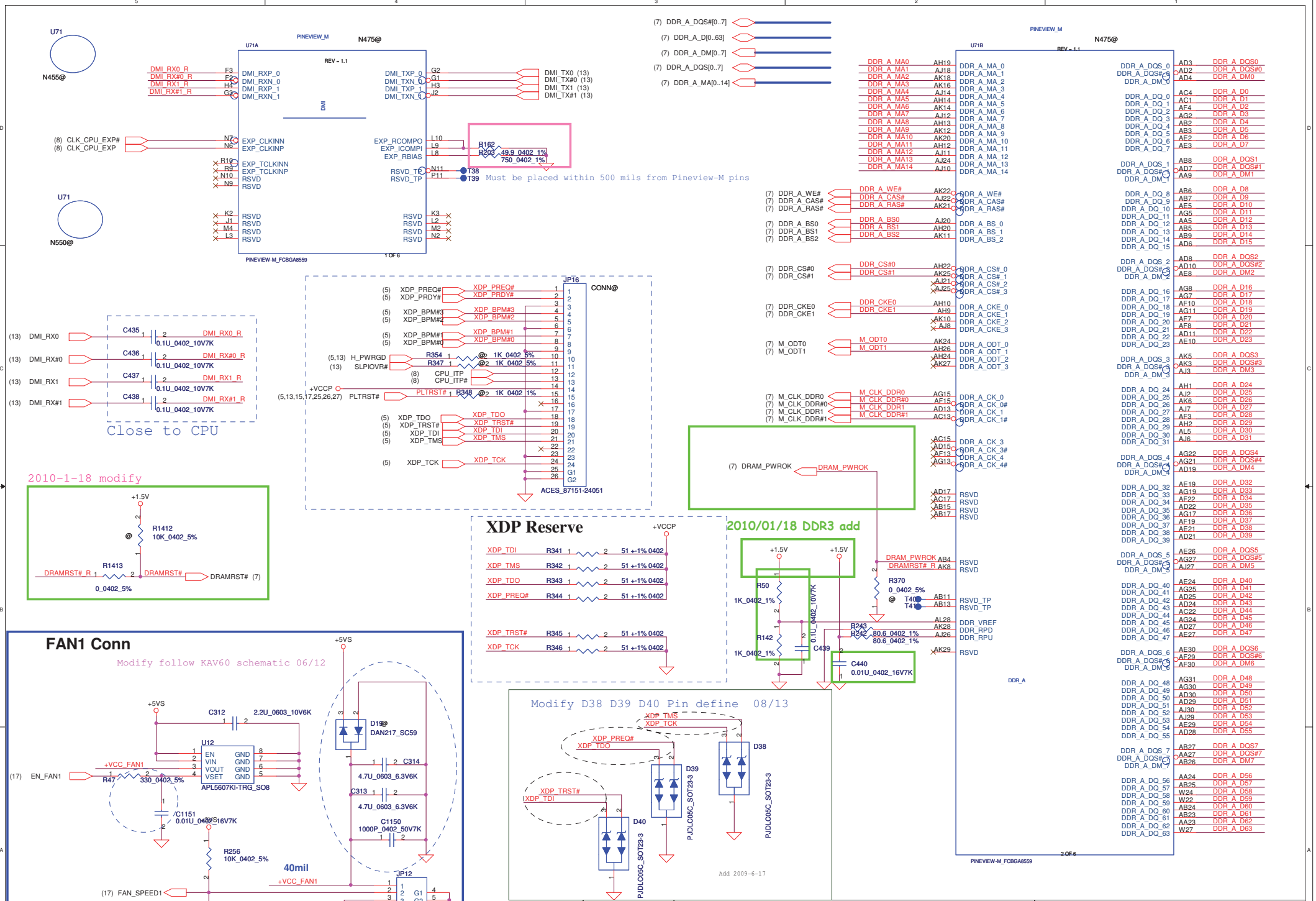

Security Classification	Compal Secret Data		
Issued Date	2006/08/18	Deciphered Date	2007/8/18

THIS SHEET OF ENGINEERING DRAWING IS THE PROPRIETARY PROPERTY OF COMPAL ELECTRONICS, INC. AND CONTAINS CONFIDENTIAL AND TRADE SECRET INFORMATION. THIS SHEET MAY NOT BE TRANSFERED FROM THE CUSTODY OF THE COMPETENT DIVISION OF R&D DEPARTMENT EXCEPT AS AUTHORIZED BY COMPAL ELECTRONICS, INC. NEITHER THIS SHEET NOR THE INFORMATION IT CONTAINS MAY BE USED BY OR DISCLOSED TO ANY THIRD PARTY WITHOUT PRIOR WRITTEN CONSENT OF COMPAL ELECTRONICS, INC.

Compal Electronics, Inc.

Title: Pineview(1/3)

Size: Custom | Document Number: LA-6421P | Rev: 0.1

Date: Monday, June 28, 2010 | Sheet 4 of 39

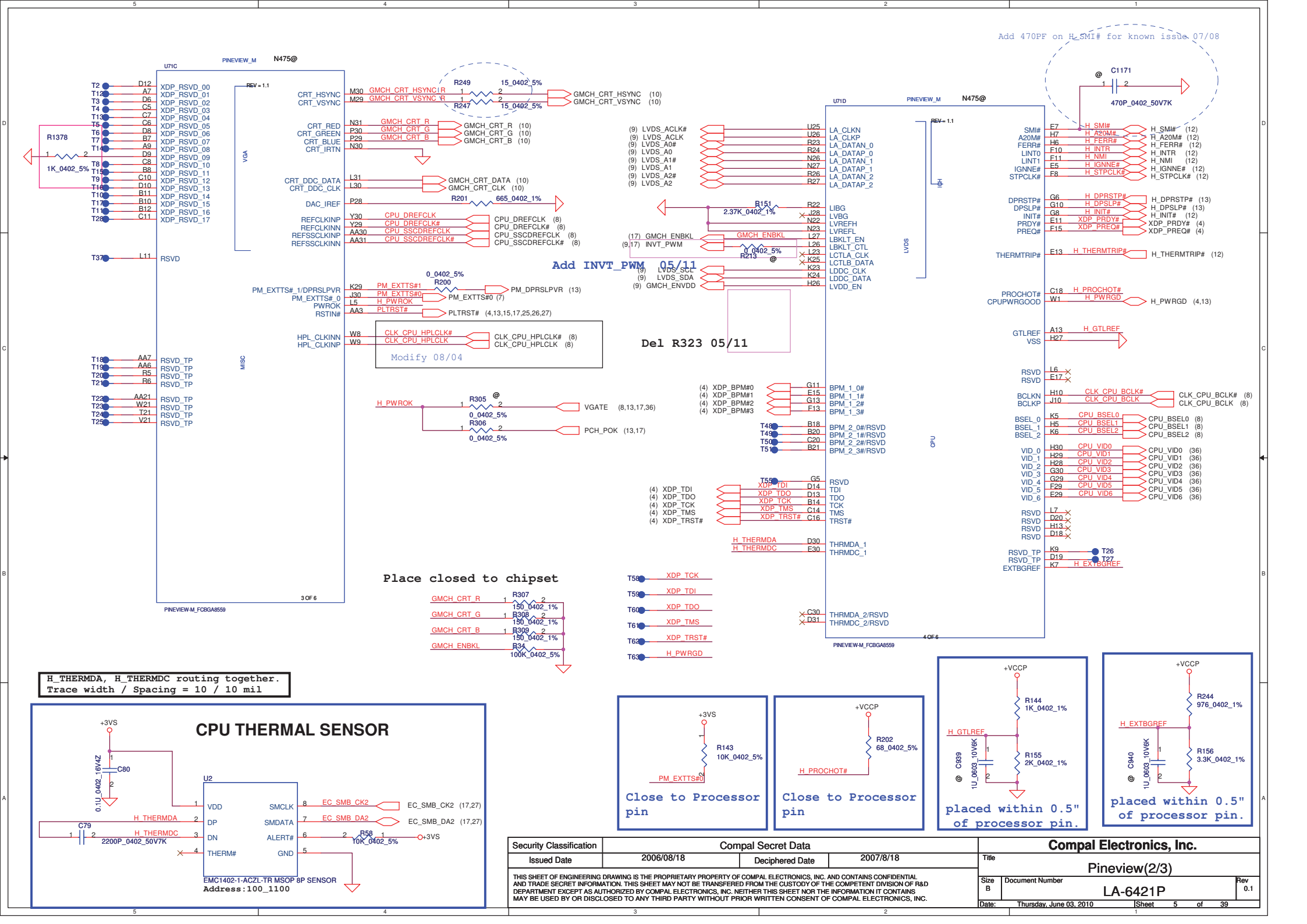

Security Classification	Compal Secret Data		
Issued Date	2006/08/18	Deciphered Date	2007/8/18

THIS SHEET OF ENGINEERING DRAWING IS THE PROPRIETARY PROPERTY OF COMPAL ELECTRONICS, INC. AND CONTAINS CONFIDENTIAL AND TRADE SECRET INFORMATION. THIS SHEET MAY NOT BE TRANSFERED FROM THE CUSTODY OF THE COMPETENT DIVISION OF R&D DEPARTMENT EXCEPT AS AUTHORIZED BY COMPAL ELECTRONICS, INC. NEITHER THIS SHEET NOR THE INFORMATION IT CONTAINS MAY BE USED BY OR DISCLOSED TO ANY THIRD PARTY WITHOUT PRIOR WRITTEN CONSENT OF COMPAL ELECTRONICS, INC.

Compal Electronics, Inc.

Title	Pineview(2/3)	
Size B	Document Number LA-6421P	Rev 0.1
Date: Thursday, June 03, 2010	Sheet 5 of 39	

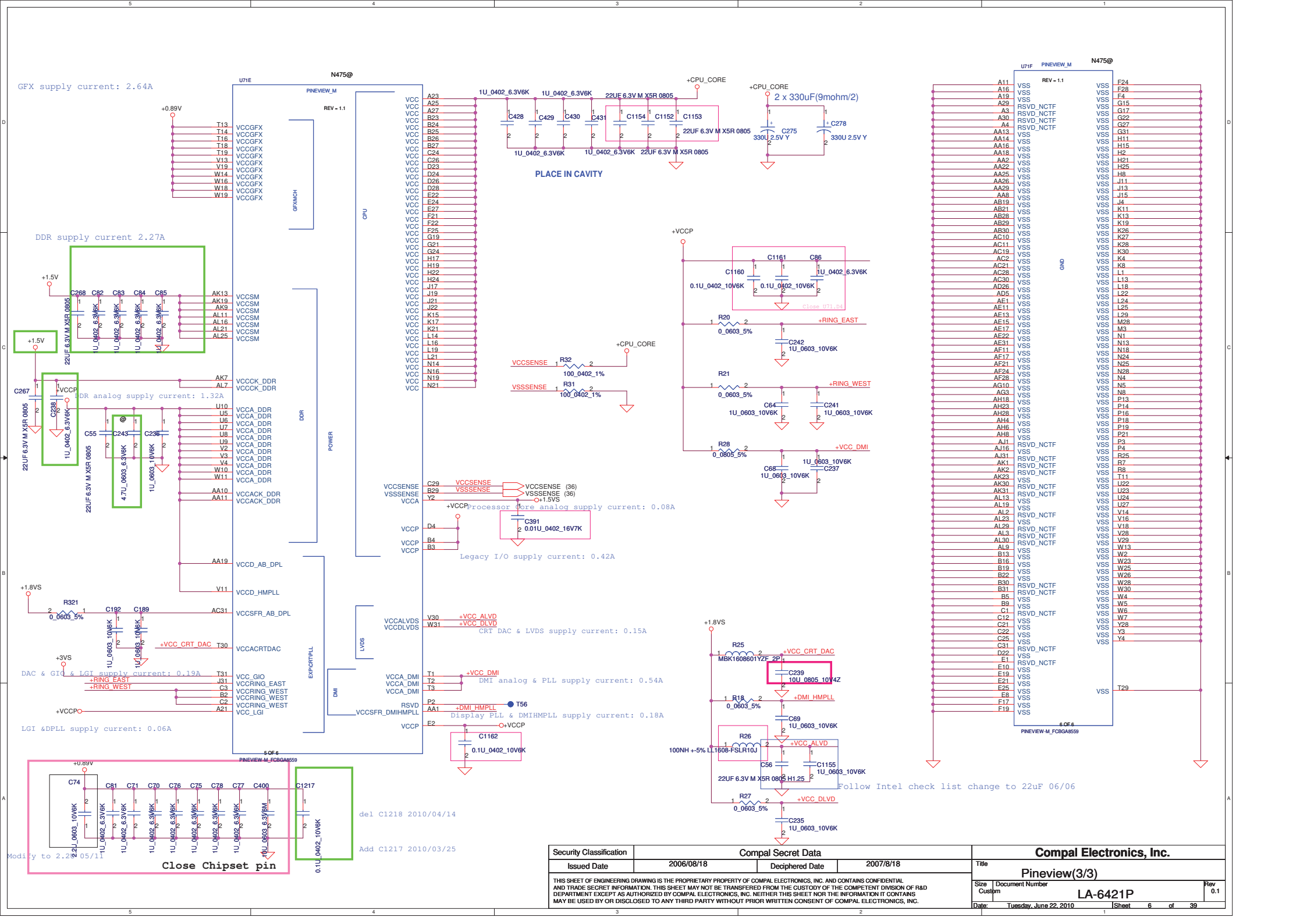
GFX supply current: 2.64A
DDR supply current 2.27A
DDR analog supply current: 1.32A
Processor core analog supply current: 0.08A
Legacy I/O supply current: 0.42A
CRT DAC & LVDS supply current: 0.15A
DMI analog & PLL supply current: 0.54A
Display PLL & DMIHMPLL supply current: 0.18A
DAC & GIO & LGI supply current: 0.19A
LGI &DPLL supply current: 0.06A
PLACE IN CAVITY
2 x 330uF(9mohm/2)
Follow Intel check list change to 22uF 06/06
del C1218 2010/04/14
Add C1217 2010/03/25
Modify to 2.2U 05/11
Close Chipset pin
U71E
PINEVIEW_M
REV = 1.1
N475@
U71F
PINEVIEW_M-M_FCBGA8559
Security Classification
Compal Secret Data
Issued Date
2006/08/18
Deciphered Date
2007/8/18
THIS SHEET OF ENGINEERING DRAWING IS THE PROPRIETARY PROPERTY OF COMPAL ELECTRONICS, INC. AND CONTAINS CONFIDENTIAL AND TRADE SECRET INFORMATION. THIS SHEET MAY NOT BE TRANSFERED FROM THE CUSTODY OF THE COMPETENT DIVISION OF R&D DEPARTMENT EXCEPT AS AUTHORIZED BY COMPAL ELECTRONICS, INC. NEITHER THIS SHEET NOR THE INFORMATION IT CONTAINS MAY BE USED BY OR DISCLOSED TO ANY THIRD PARTY WITHOUT PRIOR WRITTEN CONSENT OF COMPAL ELECTRONICS, INC.
Compal Electronics, Inc.
Title
Pineview(3/3)
Size
Custom
Document Number
LA-6421P
Rev
0.1
Date:
Tuesday, June 22, 2010
Sheet
6
of
39

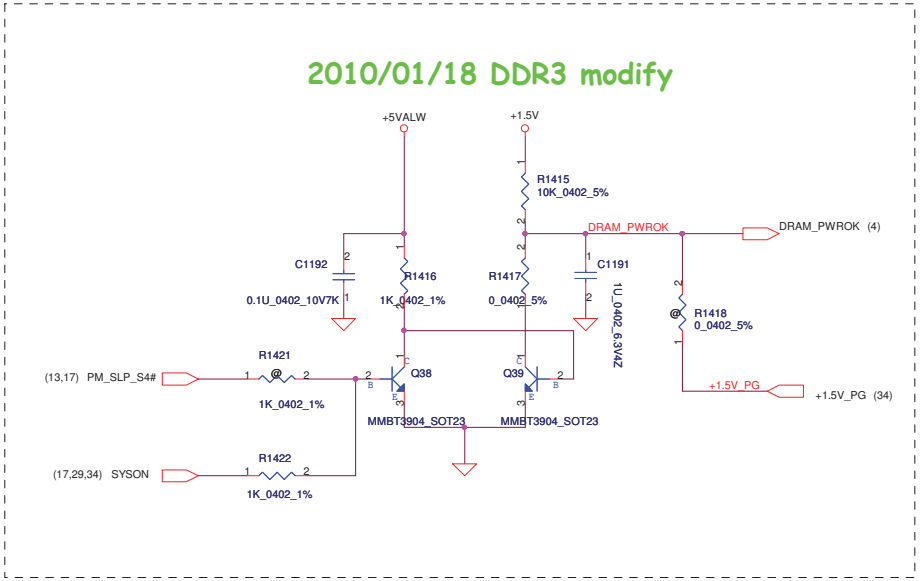

Layout Note:
Place near JDIMM1

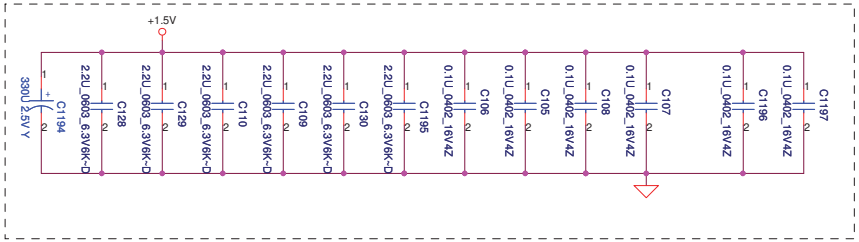

Layout Note:
Place near JDIMM1.203 & JDIMM1.204

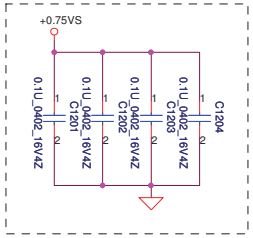

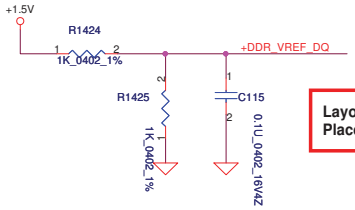

Layout Note:
Place near JDIMM1.1

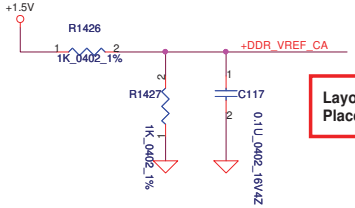

Layout Note:
Place near JDIMM1.126

Change C116,C141 to
SE076104K80 2010/04/06

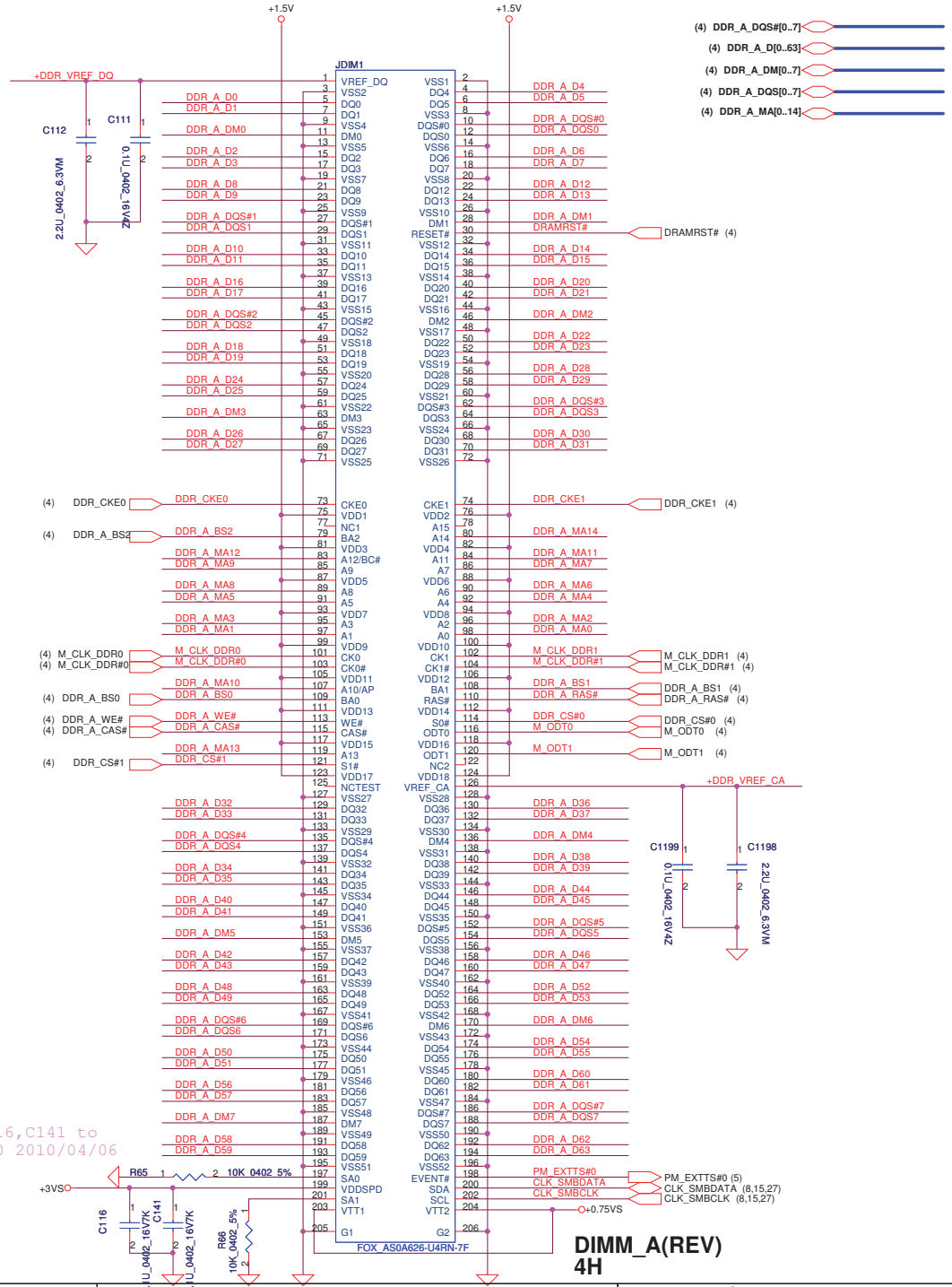

DIMM_A(REV)
4H

Security Classification	Compal Secret Data		
Issued Date	2006/08/18	Deciphered Date	2007/8/18

THIS SHEET OF ENGINEERING DRAWING IS THE PROPRIETARY PROPERTY OF COMPAL ELECTRONICS, INC. AND CONTAINS CONFIDENTIAL AND TRADE SECRET INFORMATION. THIS SHEET MAY NOT BE TRANSFERED FROM THE CUSTODY OF THE COMPETENT DIVISION OF R&D DEPARTMENT EXCEPT AS AUTHORIZED BY COMPAL ELECTRONICS, INC. NEITHER THIS SHEET NOR THE INFORMATION IT CONTAINS MAY BE USED BY OR DISCLOSED TO ANY THIRD PARTY WITHOUT PRIOR WRITTEN CONSENT OF COMPAL ELECTRONICS, INC.

Compal Electronics, Inc.

Title: DDR3-SODIMMA

Size: B | Document Number: LA-6421P | Rev: 0.1

Date: Tuesday, June 22, 2010 | Sheet 7 of 39

FSC CLKSEL2	FSB CLKSEL1	FSA CLKSEL0	CPU MHz	SRC MHz	PCI MHz	REF MHz	DOT_96 MHz	USB MHz
0	0	0	266	100	33.3	14.318	96.0	48.0
0	0	1	133	100	33.3	14.318	96.0	48.0
0	1	0	200	100	33.3	14.318	96.0	48.0
0	1	1	166	100	33.3	14.318	96.0	48.0
1	0	0	333	100	33.3	14.318	96.0	48.0
1	0	1	100	100	33.3	14.318	96.0	48.0
1	1	0	400	100	33.3	14.318	96.0	48.0
1	1	1	Reserved					

Change C174 C175 to 10U_0603 05/14

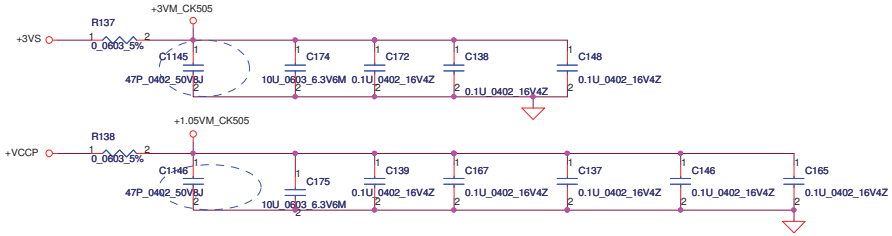

Add C1145 C1146 C1147 for EMI 06/12

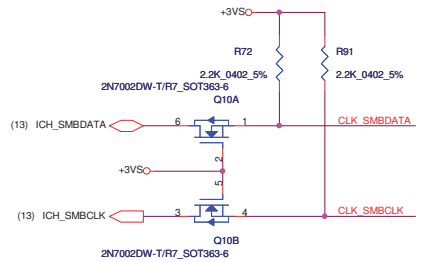

Change Q10 to SB00000DH00 2010/04/06

IDT: SA00003H610

Realtek: SA00003H730

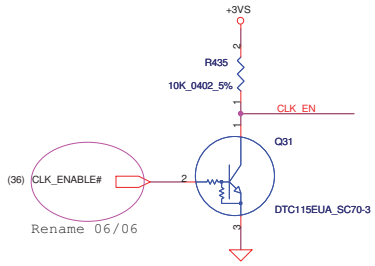

Rename 06/06

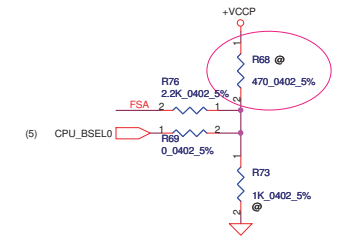

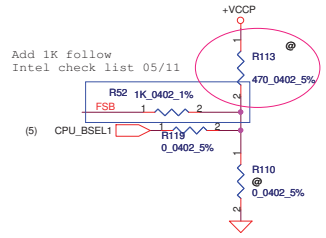

Add 1K follow
Intel check list 05/11

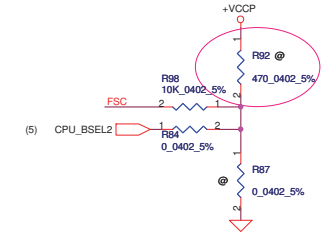

Change co-lay net name to +1.5VM_CK505 07/03

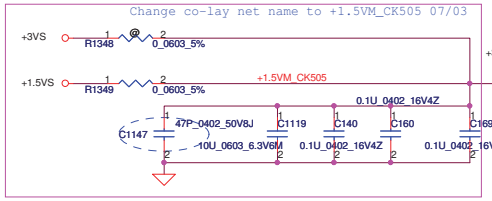

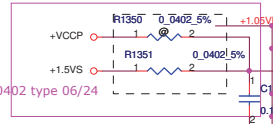

Change C1350 C1351 to 0402 type 06/24

del C1219 R1442 04/14

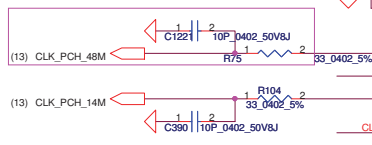

R86
TPM@

Add R1443 for TPM 2010/03/25

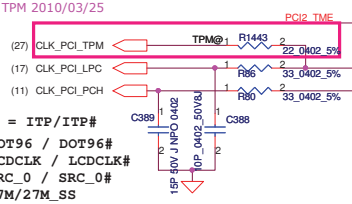

For ITP_EN, 0 =SRC8/SRC8#; 1 = ITP/ITP#
For PCI4_SEL, 0 = Pin24/25 : DOT96 / DOT96#
Pin28/29 : LCDCLK / LCDCLK#
1 = Pin24/25 : SRC_0 / SRC_0#
Pin28/29 : 27M/27M_SS

For PCI2_TME:0=Overclocking of CPU and SRC allowed
(ICS only) 1=Overclocking of CPU and SRC NOT allowed

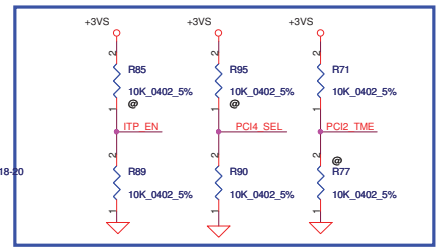

Follow Intel check list change to 27P 06/05
Follow Vendor check change to 22P 10/16
Follow Vendor check change to 33P 05/24

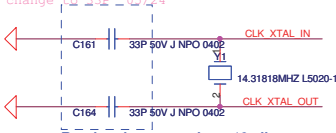

Routing the trace at least 10mil

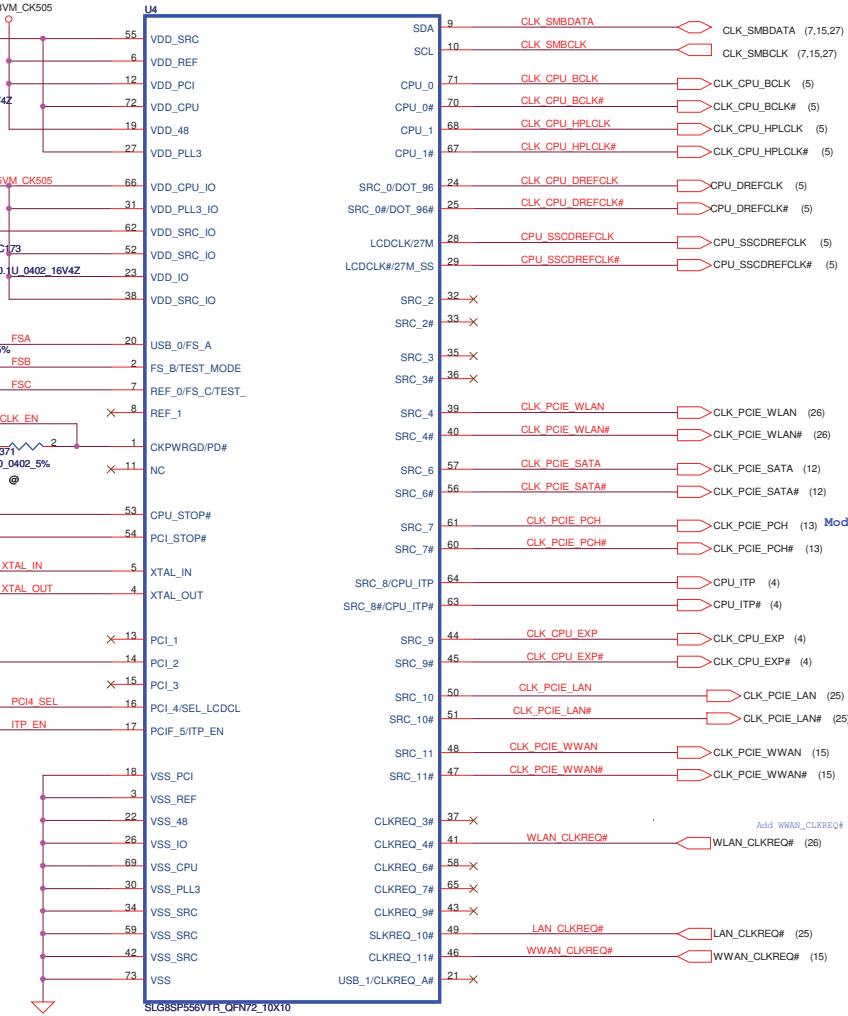

Modify CLK SRC Port list 05/12

Add WWAN_CLKREQ# 05/04

SRC PORT LIST

PORT	DEVICE
SRC1	CPU_SSCDREFCLK
SRC2	
SRC3	
SRC4	PCIE_WLAN
SRC6	PCIE_SATA
SRC7	PCIE_PCH
SRC8	CPU_ITP
SRC9	CLK_CPU_EXP
SRC10	PCIE_LAN
SRC11	PCIE_WWAN

Add R107 05/04

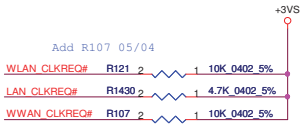

REQ PORT LIST

PORT	DEVICE
REQ_3#	
REQ_4#	PCIE_WLAN
REQ_6#	
REQ_7#	
REQ_9#	
REQ_10#	PCIE_WWAN
REQ_11#	
REQ_A#	

Security Classification	Compal Secret Data		
Issued Date	2007/10/15	Deciphered Date	2008/10/15

THIS SHEET OF ENGINEERING DRAWING IS THE PROPRIETARY PROPERTY OF COMPAL ELECTRONICS, INC. AND CONTAINS CONFIDENTIAL AND TRADE SECRET INFORMATION. THIS SHEET MAY NOT BE TRANSFERED FROM THE CUSTODY OF THE COMPETENT DIVISION OF R&D DEPARTMENT EXCEPT AS AUTHORIZED BY COMPAL ELECTRONICS, INC. NEITHER THIS SHEET NOR THE INFORMATION IT CONTAINS MAY BE USED BY OR DISCLOSED TO ANY THIRD PARTY WITHOUT PRIOR WRITTEN CONSENT OF COMPAL ELECTRONICS, INC.

Compal Electronics, Inc.

Title: Clock Generator CK505

Size: | Document Number: LA-6421P | Rev: 0.1

Date: Thursday, June 03, 2010 | Sheet 8 of 39

LCD POWER CIRCUIT

Change R577 to 0402 SIZE 06/16

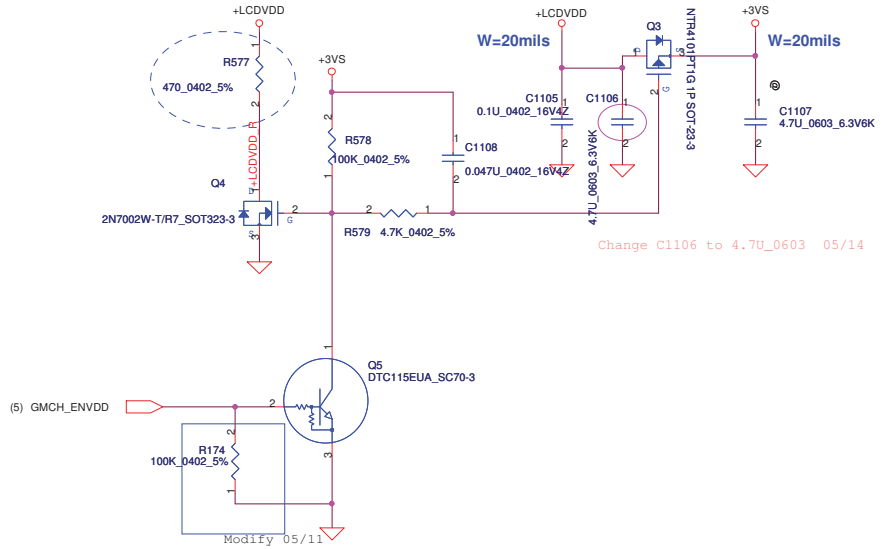

Change C1106 to 4.7U_0603 05/14

Modify 05/11

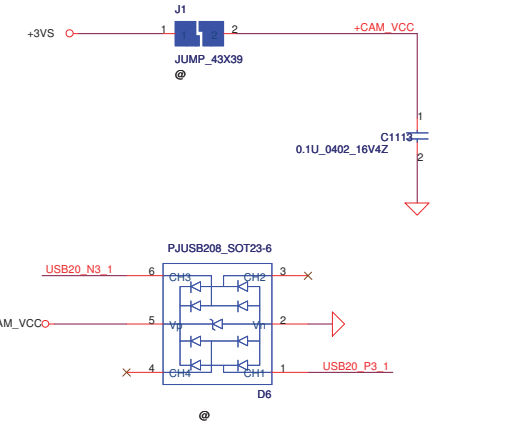

Add D6 05/14

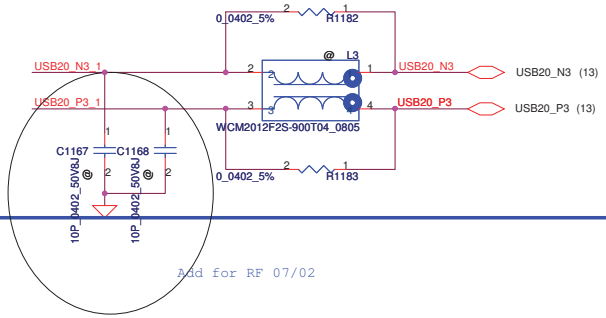

Add for RF 07/02

CMOS & LCD/PANEL BD. Conn.

Modify JLVDS1 08/04

Add R1444 R1445 2010/03/25

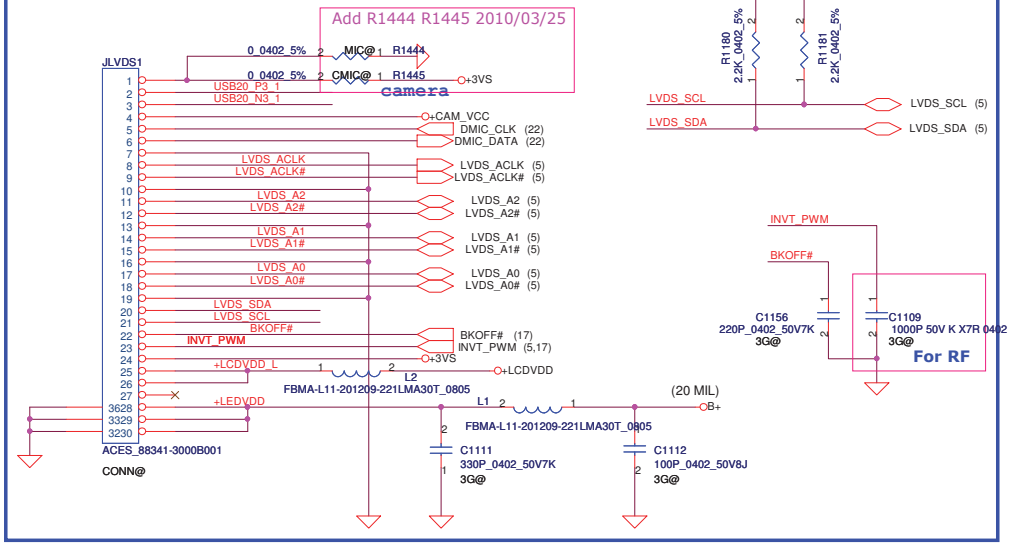

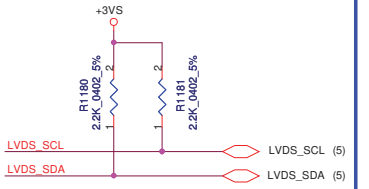

Security Classification	Compal Secret Data		
Issued Date	2006/08/18	Deciphered Date	2007/8/18

THIS SHEET OF ENGINEERING DRAWING IS THE PROPRIETARY PROPERTY OF COMPAL ELECTRONICS, INC. AND CONTAINS CONFIDENTIAL AND TRADE SECRET INFORMATION. THIS SHEET MAY NOT BE TRANSFERED FROM THE CUSTODY OF THE COMPETENT DIVISION OF R&D DEPARTMENT EXCEPT AS AUTHORIZED BY COMPAL ELECTRONICS, INC. NEITHER THIS SHEET NOR THE INFORMATION IT CONTAINS MAY BE USED BY OR DISCLOSED TO ANY THIRD PARTY WITHOUT PRIOR WRITTEN CONSENT OF COMPAL ELECTRONICS, INC.

Compal Electronics, Inc.

Title: LVDS /INVERTER

Size: B | Document Number: LA-6421P | Rev: 0.1

Date: Friday, June 25, 2010 | Sheet 9 of 39

Close to CRT CONN for ESD.

Modify C31- C308 C303 C307 C306 C304 BOM Structure 0615

Change L12. L14, L15 to SM01000C600 2010/04/06

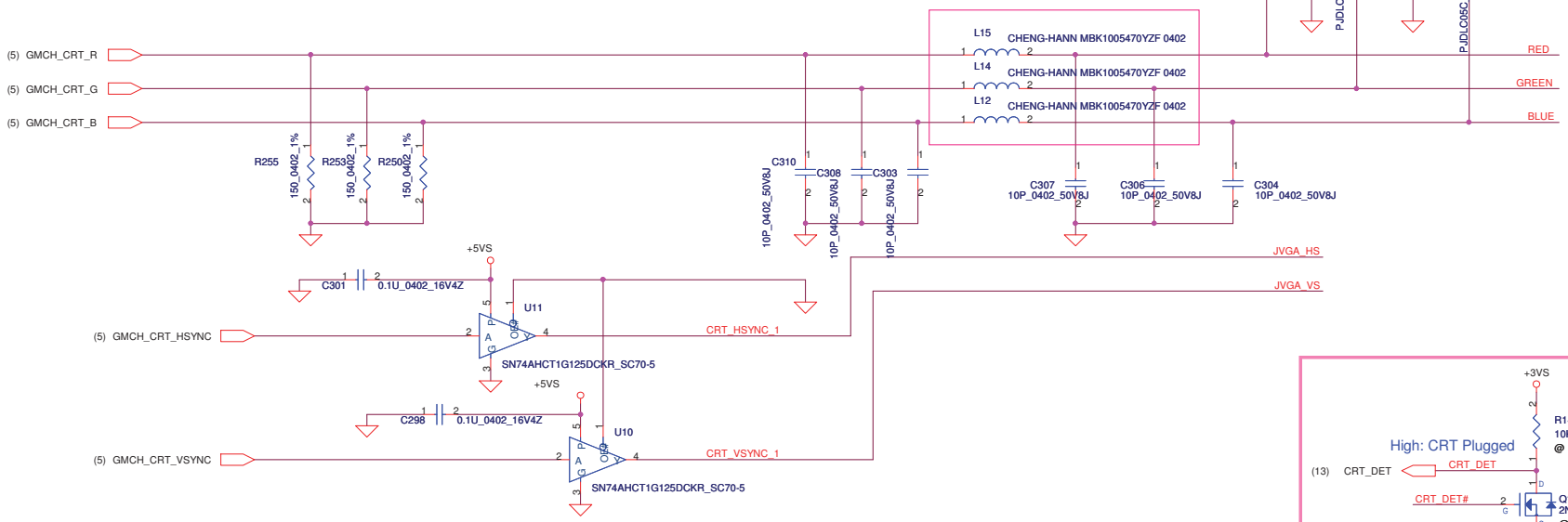

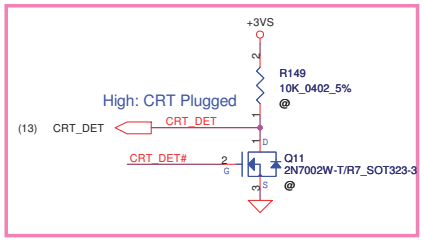

CRT PORT

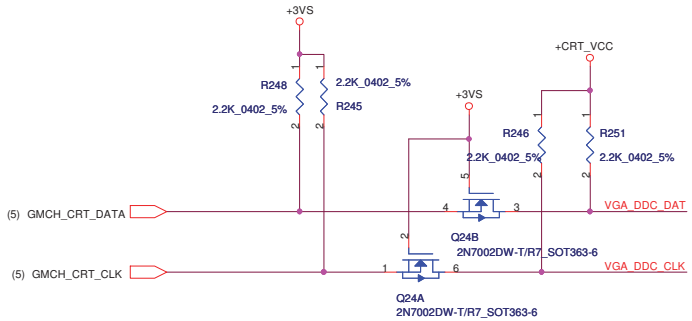

Change Q24 to SB00000DH00 2010/04/06

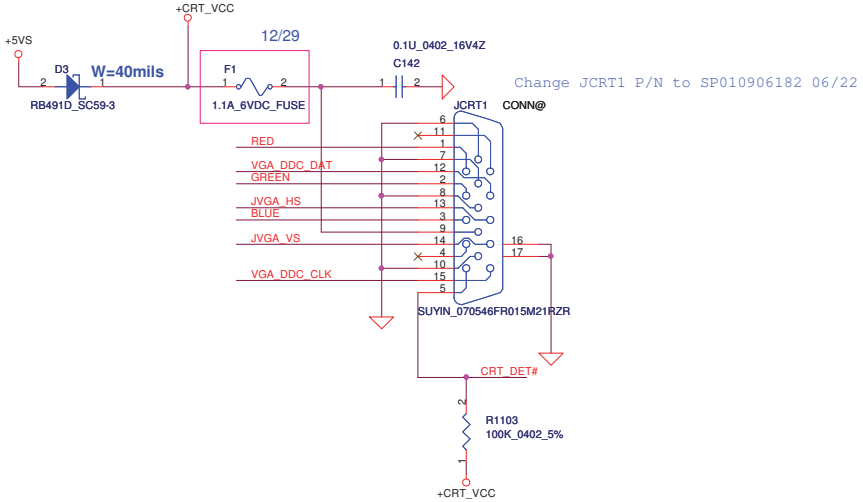

Change JCRT1 P/N to SP010906182 06/22

Security Classification	Compal Secret Data		
Issued Date	2006/08/18	Deciphered Date	2007/8/18

THIS SHEET OF ENGINEERING DRAWING IS THE PROPRIETARY PROPERTY OF COMPAL ELECTRONICS, INC. AND CONTAINS CONFIDENTIAL AND TRADE SECRET INFORMATION. THIS SHEET MAY NOT BE TRANSFERED FROM THE CUSTODY OF THE COMPETENT DIVISION OF R&D DEPARTMENT EXCEPT AS AUTHORIZED BY COMPAL ELECTRONICS, INC. NEITHER THIS SHEET NOR THE INFORMATION IT CONTAINS MAY BE USED BY OR DISCLOSED TO ANY THIRD PARTY WITHOUT PRIOR WRITTEN CONSENT OF COMPAL ELECTRONICS, INC.

Compal Electronics, Inc.

Title: CRT PORT

Size: B | Document Number: LA-6421P | Rev: 0.1

Date: Tuesday, June 22, 2010 | Sheet 10 of 39

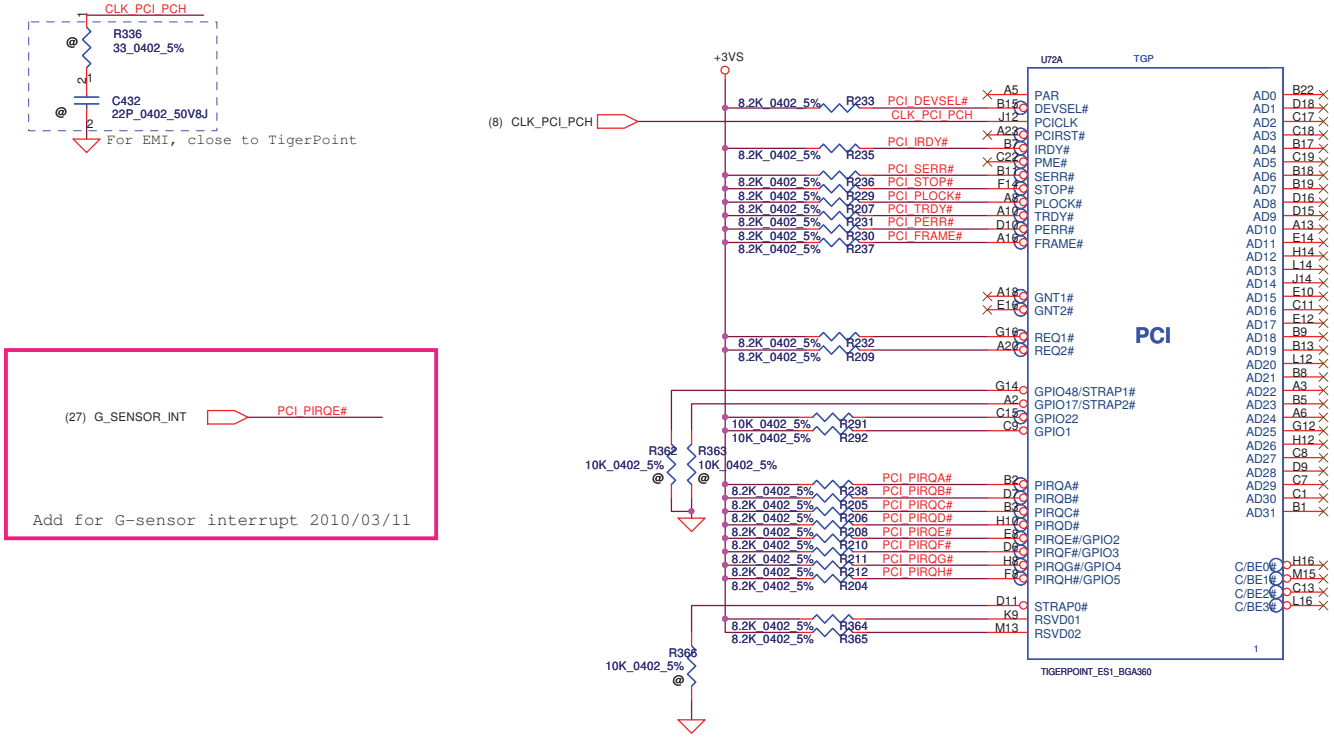

(27) G_SENSOR_INT — PCI_PIRQE#

Add for G-sensor interrupt 2010/03/11

STRAP2# GPIO17	STRAP1# GPIO48	Boot BIOS
0	1	SPI
1	0	PCI
1	1	LPC

Security Classification	Compal Secret Data		
Issued Date	2006/08/18	Deciphered Date	2007/8/18

THIS SHEET OF ENGINEERING DRAWING IS THE PROPRIETARY PROPERTY OF COMPAL ELECTRONICS, INC. AND CONTAINS CONFIDENTIAL AND TRADE SECRET INFORMATION. THIS SHEET MAY NOT BE TRANSFERED FROM THE CUSTODY OF THE COMPETENT DIVISION OF R&D DEPARTMENT EXCEPT AS AUTHORIZED BY COMPAL ELECTRONICS, INC. NEITHER THIS SHEET NOR THE INFORMATION IT CONTAINS MAY BE USED BY OR DISCLOSED TO ANY THIRD PARTY WITHOUT PRIOR WRITTEN CONSENT OF COMPAL ELECTRONICS, INC.

Compal Electronics, Inc.

Title: Tigerpoint(1/4)

Size | Document Number: LA-6421P | Rev: 0.1

Date: Thursday, June 03, 2010 | Sheet 11 of 39

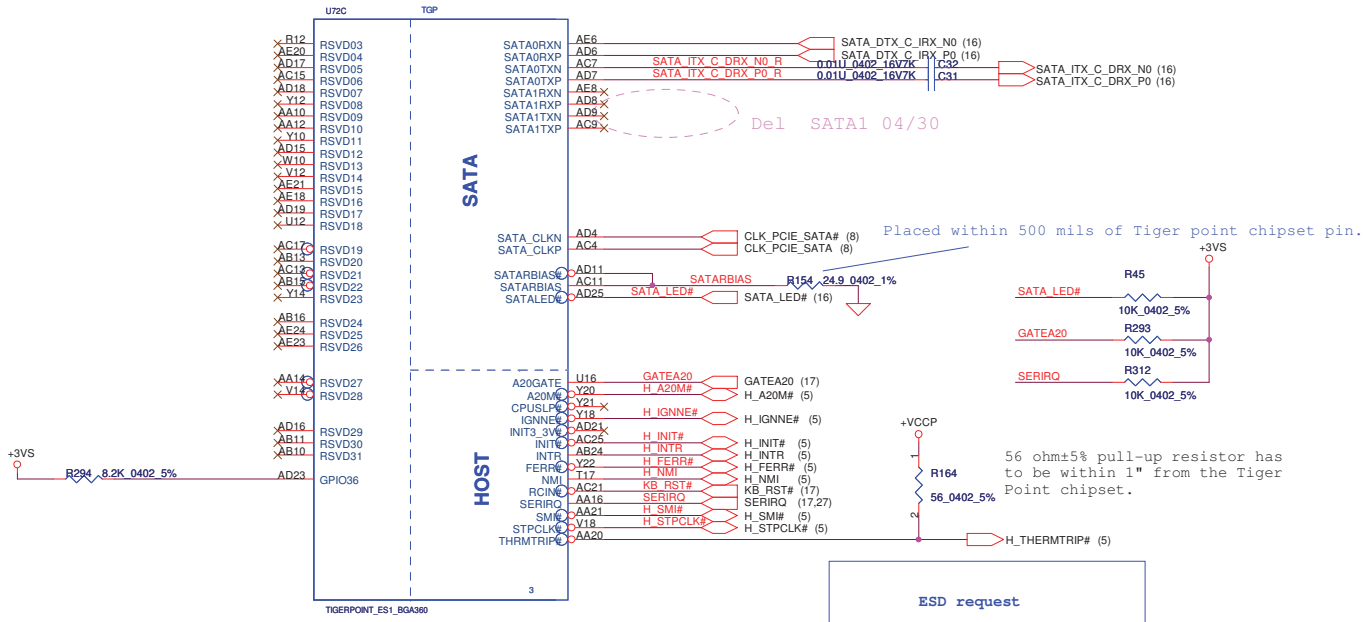

Security Classification	Compal Secret Data		
Issued Date	2006/08/18	Deciphered Date	2007/8/18

THIS SHEET OF ENGINEERING DRAWING IS THE PROPRIETARY PROPERTY OF COMPAL ELECTRONICS, INC. AND CONTAINS CONFIDENTIAL AND TRADE SECRET INFORMATION. THIS SHEET MAY NOT BE TRANSFERED FROM THE CUSTODY OF THE COMPETENT DIVISION OF R&D DEPARTMENT EXCEPT AS AUTHORIZED BY COMPAL ELECTRONICS, INC. NEITHER THIS SHEET NOR THE INFORMATION IT CONTAINS MAY BE USED BY OR DISCLOSED TO ANY THIRD PARTY WITHOUT PRIOR WRITTEN CONSENT OF COMPAL ELECTRONICS, INC.

Compal Electronics, Inc.

Title: Tigerpoint(2/4)

Size: Custom | Document Number: LA-6421P | Rev: 0.1

Date: Thursday, June 03, 2010 | Sheet 12 of 39

PCIE	Port List
1	LAN
2	WLAN
3	WWAN
4	

USB	Port List
0	USB Left1
1	USB Left2
2	USB Right2
3	CMOS
4	CardReader
5	WWAN
6	BT
7	WIMAX

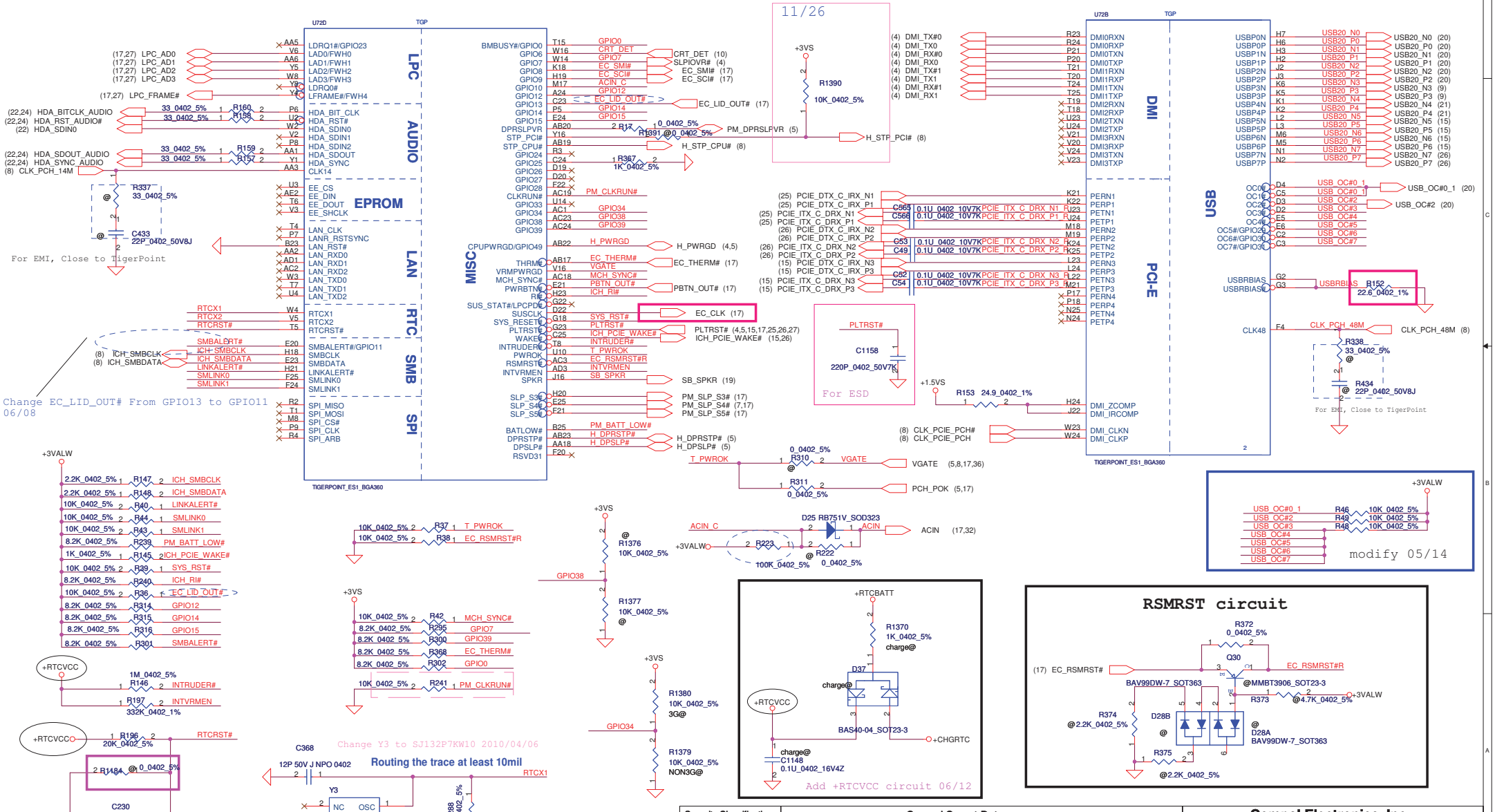

Security Classification	Compal Secret Data		
Issued Date	2006/08/18	Deciphered Date	2007/8/18

THIS SHEET OF ENGINEERING DRAWING IS THE PROPRIETARY PROPERTY OF COMPAL ELECTRONICS, INC. AND CONTAINS CONFIDENTIAL AND TRADE SECRET INFORMATION. THIS SHEET MAY NOT BE TRANSFERRED FROM THE CUSTODY OF THE COMPETENT DIVISION OF R&D DEPARTMENT EXCEPT AS AUTHORIZED BY COMPAL ELECTRONICS, INC. NEITHER THIS SHEET NOR THE INFORMATION IT CONTAINS MAY BE USED BY OR DISCLOSED TO ANY THIRD PARTY WITHOUT PRIOR WRITTEN CONSENT OF COMPAL ELECTRONICS, INC.

Compal Electronics, Inc.

Title: Tigerpoint(3/4)

Size: Custom | Document Number: LA-6421P | Rev: 0.1

Date: Thursday, June 03, 2010 | Sheet 13 of 39

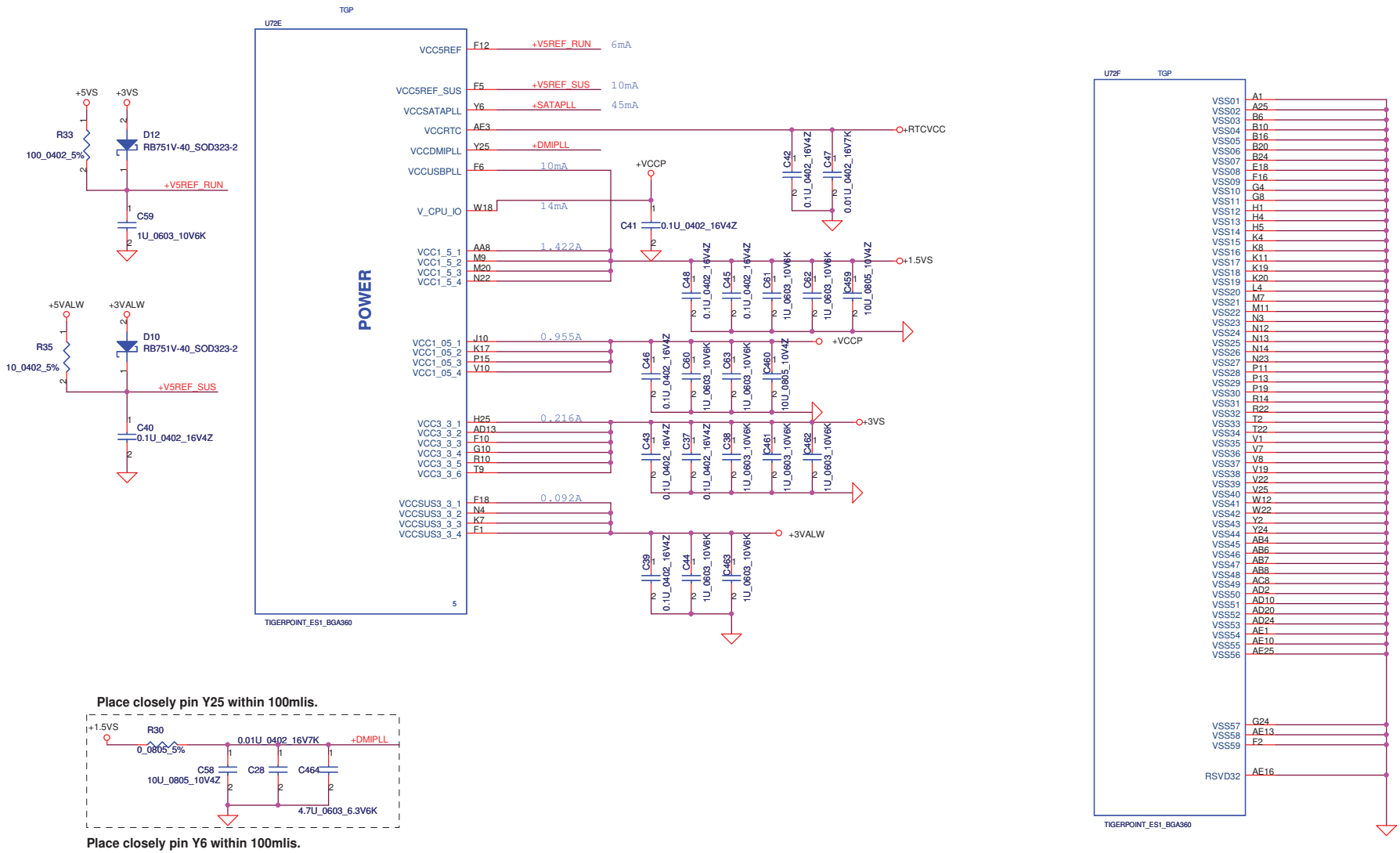

Place closely pin Y25 within 100mlis.

Place closely pin Y6 within 100mlis.

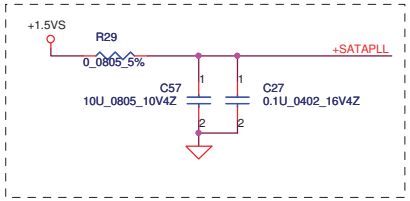

Security Classification	Compal Secret Data		
Issued Date	2009/04/15	Deciphered Date	2010/04/15

THIS SHEET OF ENGINEERING DRAWING IS THE PROPRIETARY PROPERTY OF COMPAL ELECTRONICS, INC. AND CONTAINS CONFIDENTIAL AND TRADE SECRET INFORMATION. THIS SHEET MAY NOT BE TRANSFERED FROM THE CUSTODY OF THE COMPETENT DIVISION OF R&D DEPARTMENT EXCEPT AS AUTHORIZED BY COMPAL ELECTRONICS, INC. NEITHER THIS SHEET NOR THE INFORMATION IT CONTAINS MAY BE USED BY OR DISCLOSED TO ANY THIRD PARTY WITHOUT PRIOR WRITTEN CONSENT OF COMPAL ELECTRONICS, INC.

Compal Electronics, Inc.

Title: Tigerpoint(4/4)

Size: Custom | Document Number: LA-6421P | Rev: 0.1

Date: Thursday, March 25, 2010 | Sheet 14 of 39

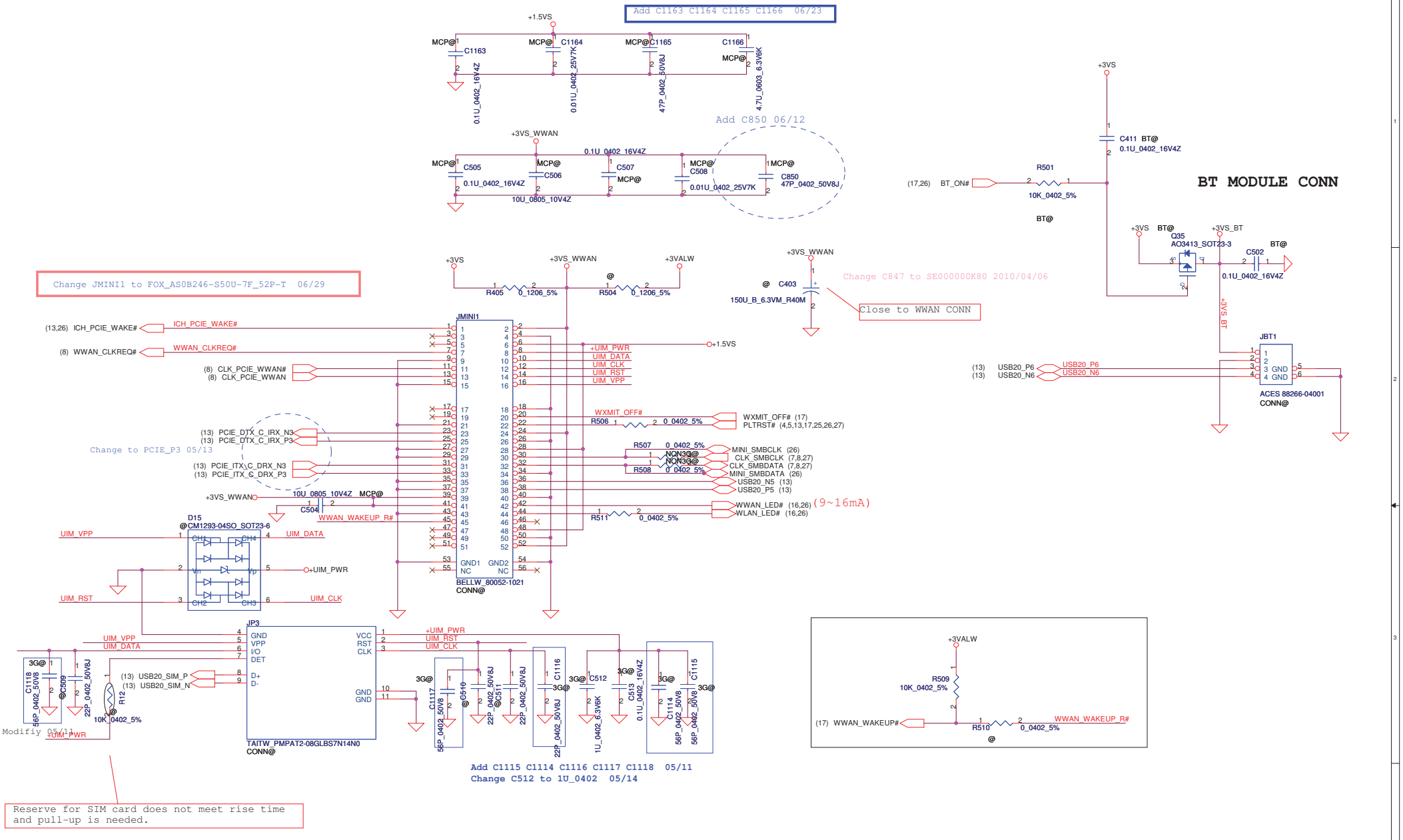

Security Classification	Compal Secret Data		
Issued Date	2006/08/05	Deciphered Date	2007/8/18

THIS SHEET OF ENGINEERING DRAWING IS THE PROPRIETARY PROPERTY OF COMPAL ELECTRONICS, INC. AND CONTAINS CONFIDENTIAL AND TRADE SECRET INFORMATION. THIS SHEET MAY NOT BE TRANSFERED FROM THE CUSTODY OF THE COMPETENT DIVISION OF R&D DEPARTMENT EXCEPT AS AUTHORIZED BY COMPAL ELECTRONICS, INC. NEITHER THIS SHEET NOR THE INFORMATION IT CONTAINS MAY BE USED BY OR DISCLOSED TO ANY THIRD PARTY WITHOUT PRIOR WRITTEN CONSENT OF COMPAL ELECTRONICS, INC.

Compal Electronics, Inc.

Title: Mini-Card/BT CONN

Size | Document Number: LA-6421P | Rev: 0.1

Date: Monday, June 28, 2010 | Sheet 15 of 39

ADD LED PCB CONN 06/12

Change JP18 to NEW P/N 06/23

09/03 Change +5VALW , +5VS to +3VALW +3VS

LED PCB CONN

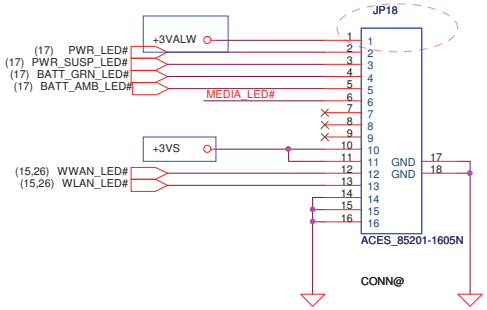

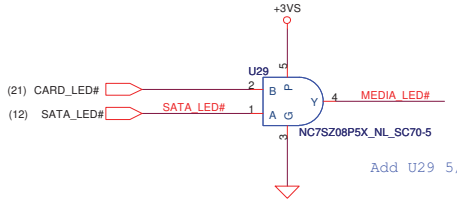

Add U29 5/14

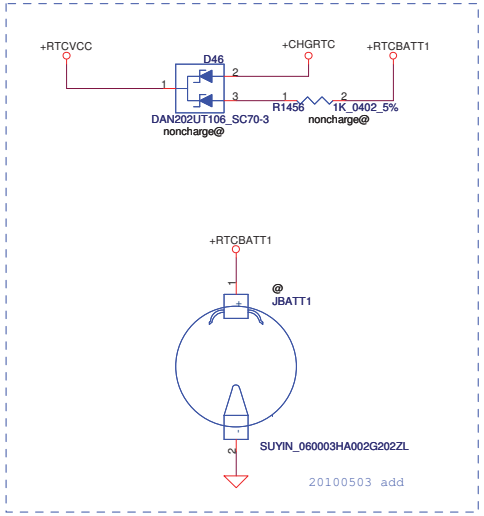

SATA HDD Conn.

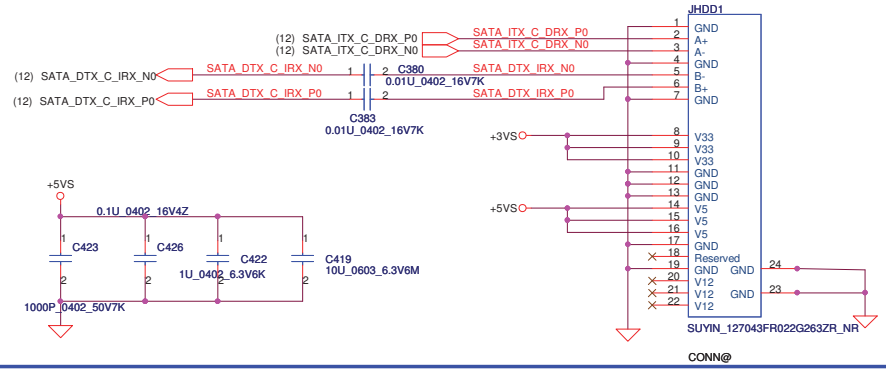

Security Classification	Compal Secret Data		
Issued Date	2006/08/18	Deciphered Date	2007/8/18

THIS SHEET OF ENGINEERING DRAWING IS THE PROPRIETARY PROPERTY OF COMPAL ELECTRONICS, INC. AND CONTAINS CONFIDENTIAL AND TRADE SECRET INFORMATION. THIS SHEET MAY NOT BE TRANSFERED FROM THE CUSTODY OF THE COMPETENT DIVISION OF R&D DEPARTMENT EXCEPT AS AUTHORIZED BY COMPAL ELECTRONICS, INC. NEITHER THIS SHEET NOR THE INFORMATION IT CONTAINS MAY BE USED BY OR DISCLOSED TO ANY THIRD PARTY WITHOUT PRIOR WRITTEN CONSENT OF COMPAL ELECTRONICS, INC.

Compal Electronics, Inc.

Title: SATA CONN./LED/B CONN./BATT CONN.

Size: B | Document Number: LA-6421P | Rev: 0.1

Date: Thursday, June 03, 2010 | Sheet 16 of 39

Change R1292 to 0 ohm for BRD ID R01 (EVT) 2010/03/25
Change R1292 to 8.2K ohm for BRD ID R02 (DVT) 2010/05/03

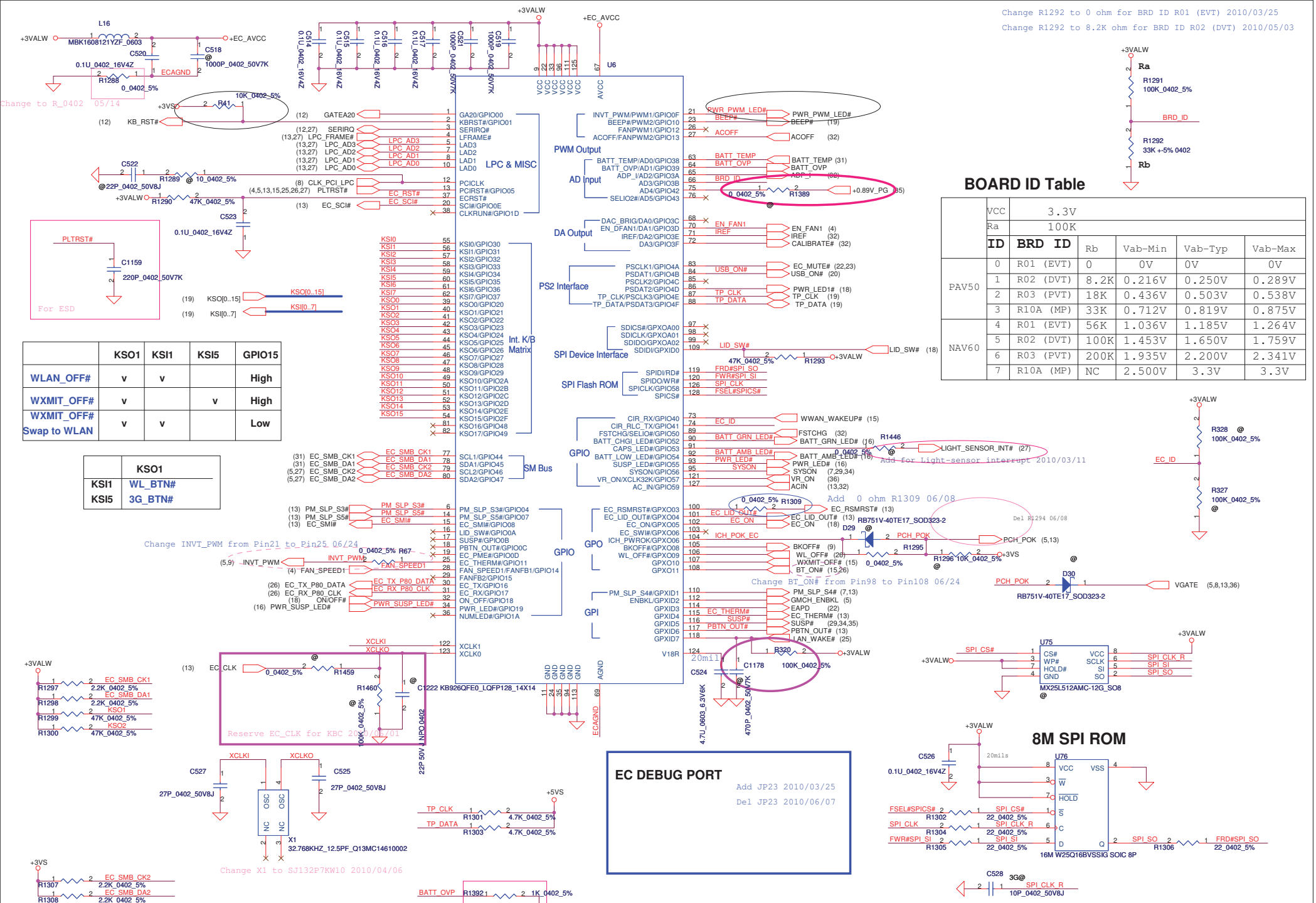

BOARD ID Table

	VCC	3.3V				
	Ra	100K				
	ID	BRD ID	Rb	Vab-Min	Vab-Typ	Vab-Max
PAV50	0	R01 (EVT)	0	0V	0V	0V
	1	R02 (DVT)	8.2K	0.216V	0.250V	0.289V
	2	R03 (PVT)	18K	0.436V	0.503V	0.538V
	3	R10A (MP)	33K	0.712V	0.819V	0.875V
NAV60	4	R01 (EVT)	56K	1.036V	1.185V	1.264V
	5	R02 (DVT)	100K	1.453V	1.650V	1.759V
	6	R03 (PVT)	200K	1.935V	2.200V	2.341V
	7	R10A (MP)	NC	2.500V	3.3V	3.3V

	KSO1	KSI1	KSI5	GPIO15
WLAN_OFF#	v	v		High
WXMIT_OFF#	v		v	High
WXMIT_OFF# Swap to WLAN	v	v		Low

	KSO1
KSI1	WL_BTN#
KSI5	3G_BTN#

Security Classification	Compal Secret Data		
Issued Date	2006/08/04	Deciphered Date	2007/8/18

THIS SHEET OF ENGINEERING DRAWING IS THE PROPRIETARY PROPERTY OF COMPAL ELECTRONICS, INC. AND CONTAINS CONFIDENTIAL AND TRADE SECRET INFORMATION. THIS SHEET MAY NOT BE TRANSFERED FROM THE CUSTODY OF THE COMPETENT DIVISION OF R&D DEPARTMENT EXCEPT AS AUTHORIZED BY COMPAL ELECTRONICS, INC. NEITHER THIS SHEET NOR THE INFORMATION IT CONTAINS MAY BE USED BY OR DISCLOSED TO ANY THIRD PARTY WITHOUT PRIOR WRITTEN CONSENT OF COMPAL ELECTRONICS, INC.

Compal Electronics, Inc.

Title: KB926/BIOS

Size: Custom | Document Number: LA-6421P | Rev: 0.1

Date: Monday, June 28, 2010 | Sheet 17 of 39

Add For NAV50 07/06
09/03 Change +5VS to +3VS

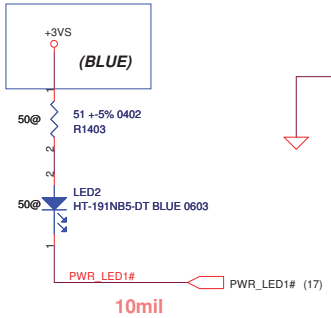

ON/OFF Button

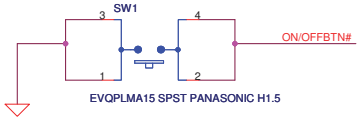

FOR EMI

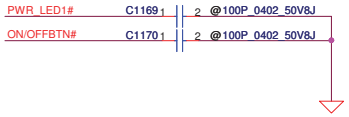

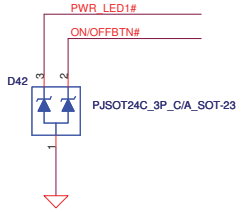

Add For PAV70 2010/04/09

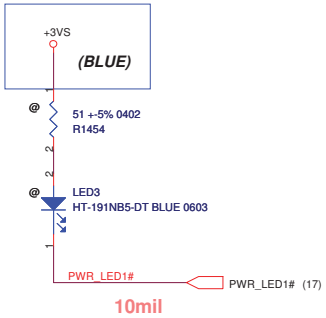

Add For PAV70 2010/04/09

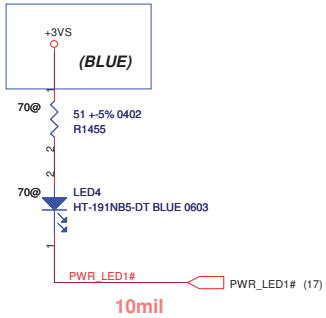

TOP Side

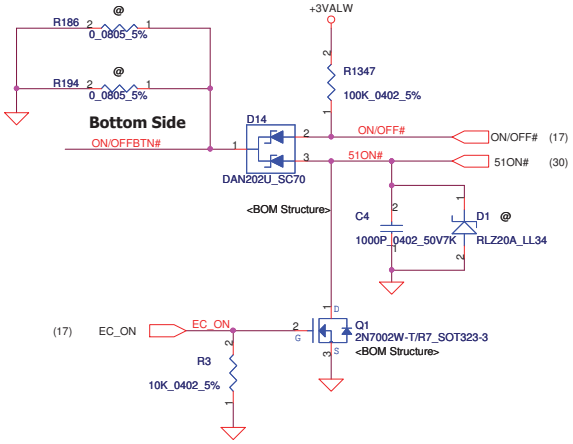

LID Switch

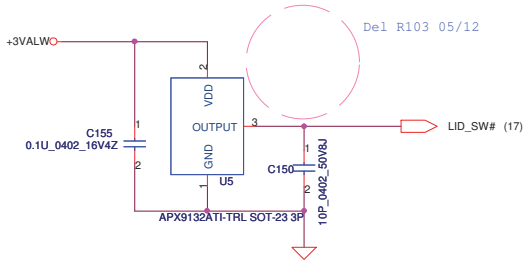

Security Classification	Compal Secret Data		
Issued Date	2006/08/18	Deciphered Date	2007/8/18

THIS SHEET OF ENGINEERING DRAWING IS THE PROPRIETARY PROPERTY OF COMPAL ELECTRONICS, INC. AND CONTAINS CONFIDENTIAL AND TRADE SECRET INFORMATION. THIS SHEET MAY NOT BE TRANSFERED FROM THE CUSTODY OF THE COMPETENT DIVISION OF R&D DEPARTMENT EXCEPT AS AUTHORIZED BY COMPAL ELECTRONICS, INC. NEITHER THIS SHEET NOR THE INFORMATION IT CONTAINS MAY BE USED BY OR DISCLOSED TO ANY THIRD PARTY WITHOUT PRIOR WRITTEN CONSENT OF COMPAL ELECTRONICS, INC.

Compal Electronics, Inc.

Title: ON/OFF / PWR SW/ LID SW

Size: B | Document Number: LA-6421P | Rev: 0.1

Date: Thursday, June 03, 2010 | Sheet 18 of 39

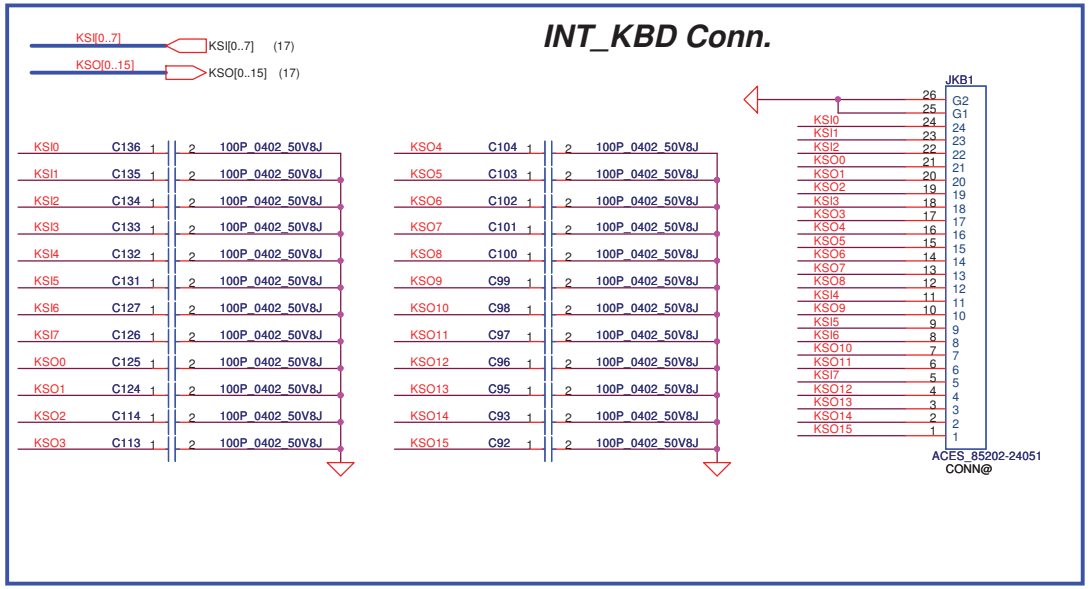

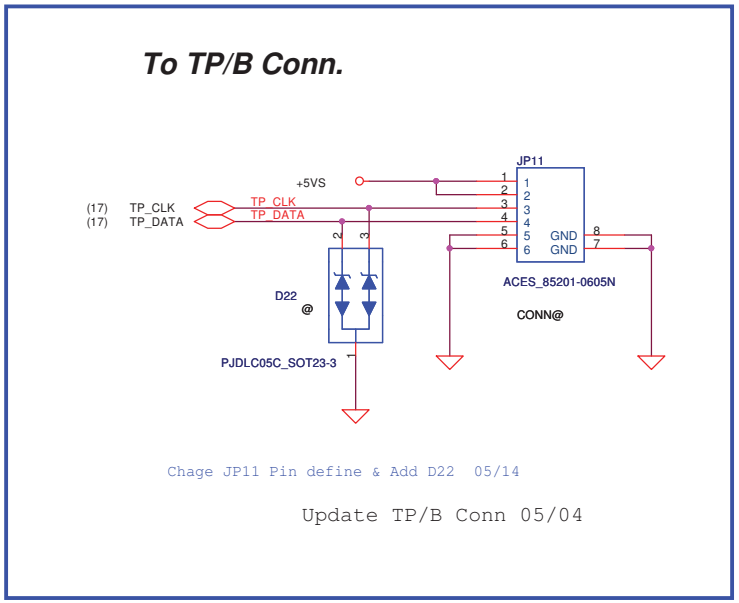

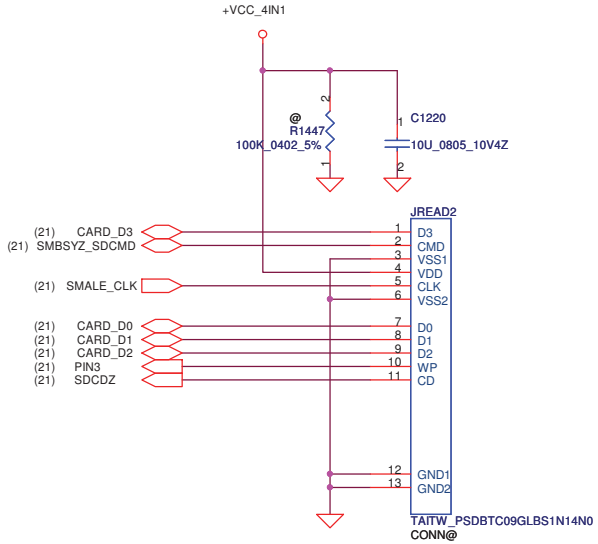

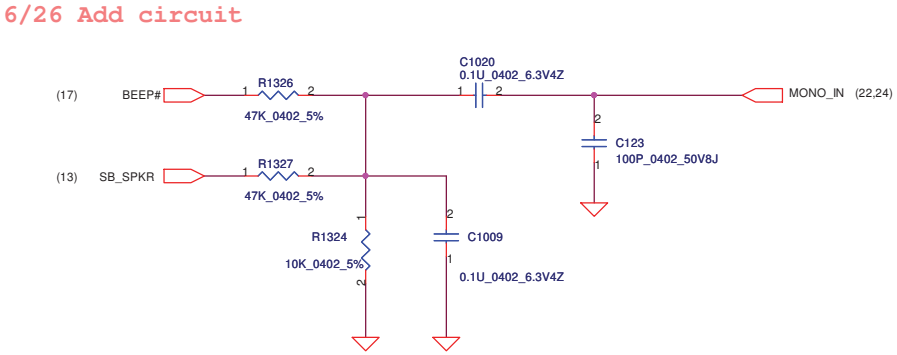

Security Classification	Compal Secret Data		
Issued Date	2006/08/18	Deciphered Date	2007/8/18

THIS SHEET OF ENGINEERING DRAWING IS THE PROPRIETARY PROPERTY OF COMPAL ELECTRONICS, INC. AND CONTAINS CONFIDENTIAL AND TRADE SECRET INFORMATION. THIS SHEET MAY NOT BE TRANSFERED FROM THE CUSTODY OF THE COMPETENT DIVISION OF R&D DEPARTMENT EXCEPT AS AUTHORIZED BY COMPAL ELECTRONICS, INC. NEITHER THIS SHEET NOR THE INFORMATION IT CONTAINS MAY BE USED BY OR DISCLOSED TO ANY THIRD PARTY WITHOUT PRIOR WRITTEN CONSENT OF COMPAL ELECTRONICS, INC.

Compal Electronics, Inc.

Title: KB Conn/TP/CR Conn

Size: B | Document Number: LA-6421P | Rev: 0.1

Date: Tuesday, June 22, 2010 | Sheet 19 of 39

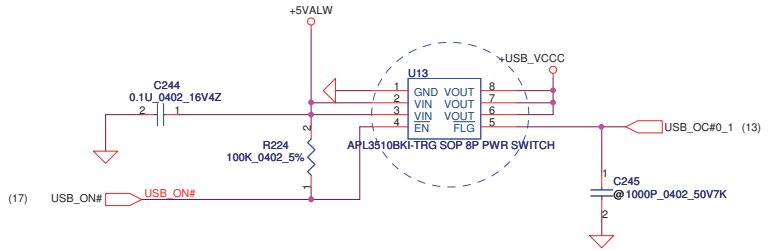

Change JUSB1 JUSB2 to NEW P/N SP010906181 06/23

USB CONN.1

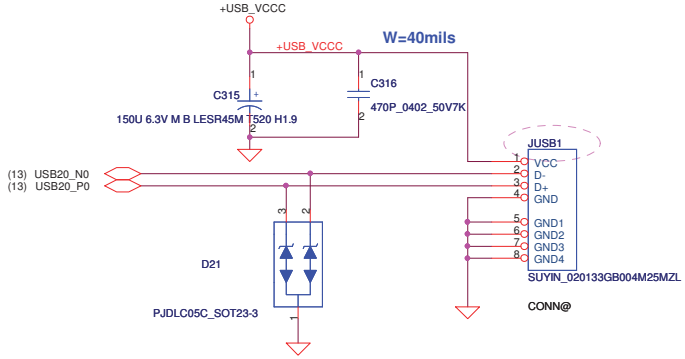

USB CONN.2

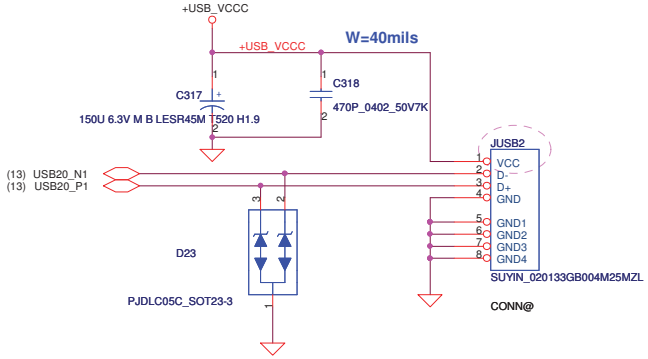

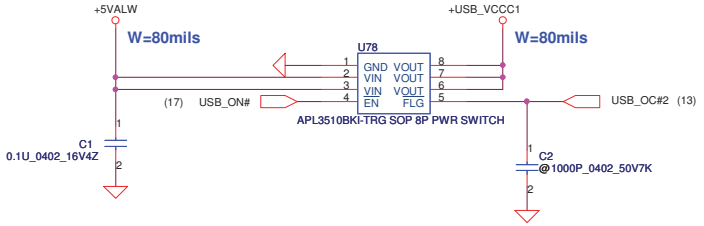

USB CONN. 3

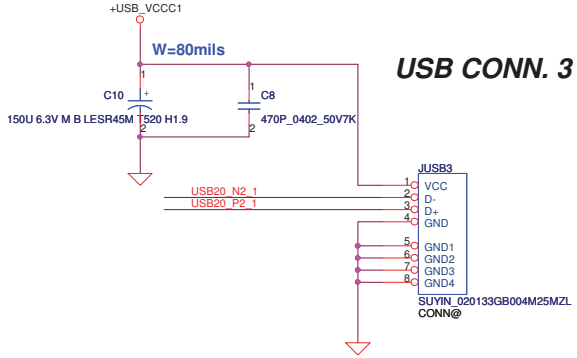

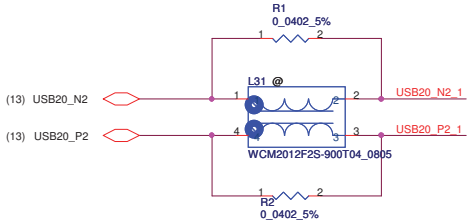

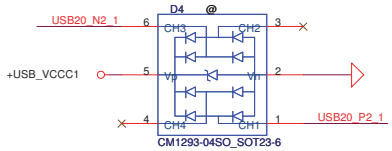

Security Classification	Compal Secret Data		
Issued Date	2006/08/18	Deciphered Date	2007/8/18

THIS SHEET OF ENGINEERING DRAWING IS THE PROPRIETARY PROPERTY OF COMPAL ELECTRONICS, INC. AND CONTAINS CONFIDENTIAL AND TRADE SECRET INFORMATION. THIS SHEET MAY NOT BE TRANSFERED FROM THE CUSTODY OF THE COMPETENT DIVISION OF R&D DEPARTMENT EXCEPT AS AUTHORIZED BY COMPAL ELECTRONICS, INC. NEITHER THIS SHEET NOR THE INFORMATION IT CONTAINS MAY BE USED BY OR DISCLOSED TO ANY THIRD PARTY WITHOUT PRIOR WRITTEN CONSENT OF COMPAL ELECTRONICS, INC.

Compal Electronics, Inc.

Title: USB PORTS

Size: B | Document Number: LA-6421P | Rev: 0.1

Date: Thursday, June 03, 2010 | Sheet 20 of 39

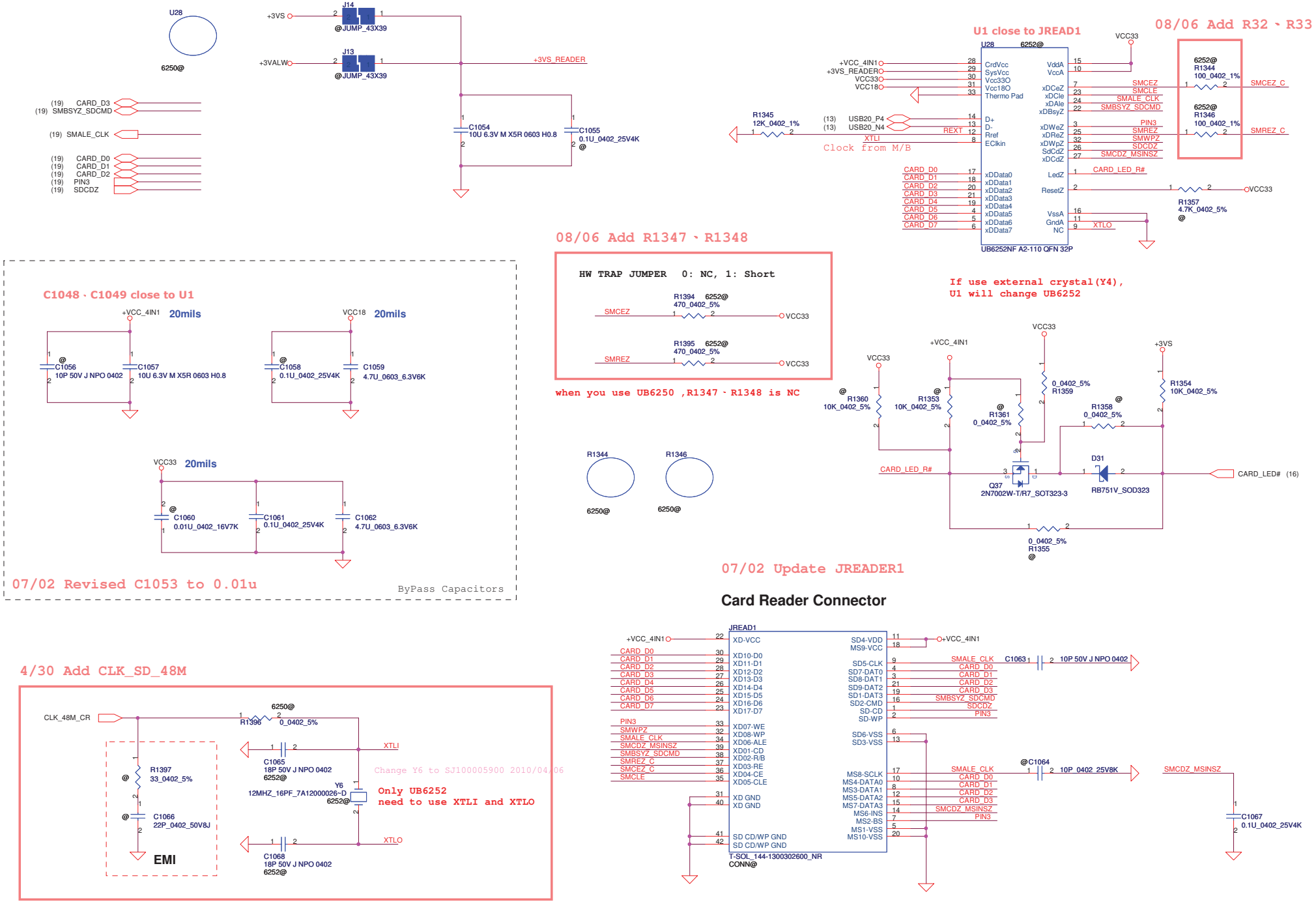

Security Classification	Compal Secret Data			Compal Electronics, Inc.
Issued Date	2009/01/22	Deciphered Date	2009/11/20	Title: Card reader
				Size: Custom; Document Number: LA-6421P; Rev: 0.1
				Date: Thursday, June 03, 2010; Sheet 21 of 39

THIS SHEET OF ENGINEERING DRAWING IS THE PROPRIETARY PROPERTY OF COMPAL ELECTRONICS, INC. AND CONTAINS CONFIDENTIAL AND TRADE SECRET INFORMATION. THIS SHEET MAY NOT BE TRANSFERED FROM THE CUSTODY OF THE COMPETENT DIVISION OF R&D DEPARTMENT EXCEPT AS AUTHORIZED BY COMPAL ELECTRONICS, INC. NEITHER THIS SHEET NOR THE INFORMATION IT CONTAINS MAY BE USED BY OR DISCLOSED TO ANY THIRD PARTY WITHOUT PRIOR WRITTEN CONSENT OF COMPAL ELECTRONICS, INC.

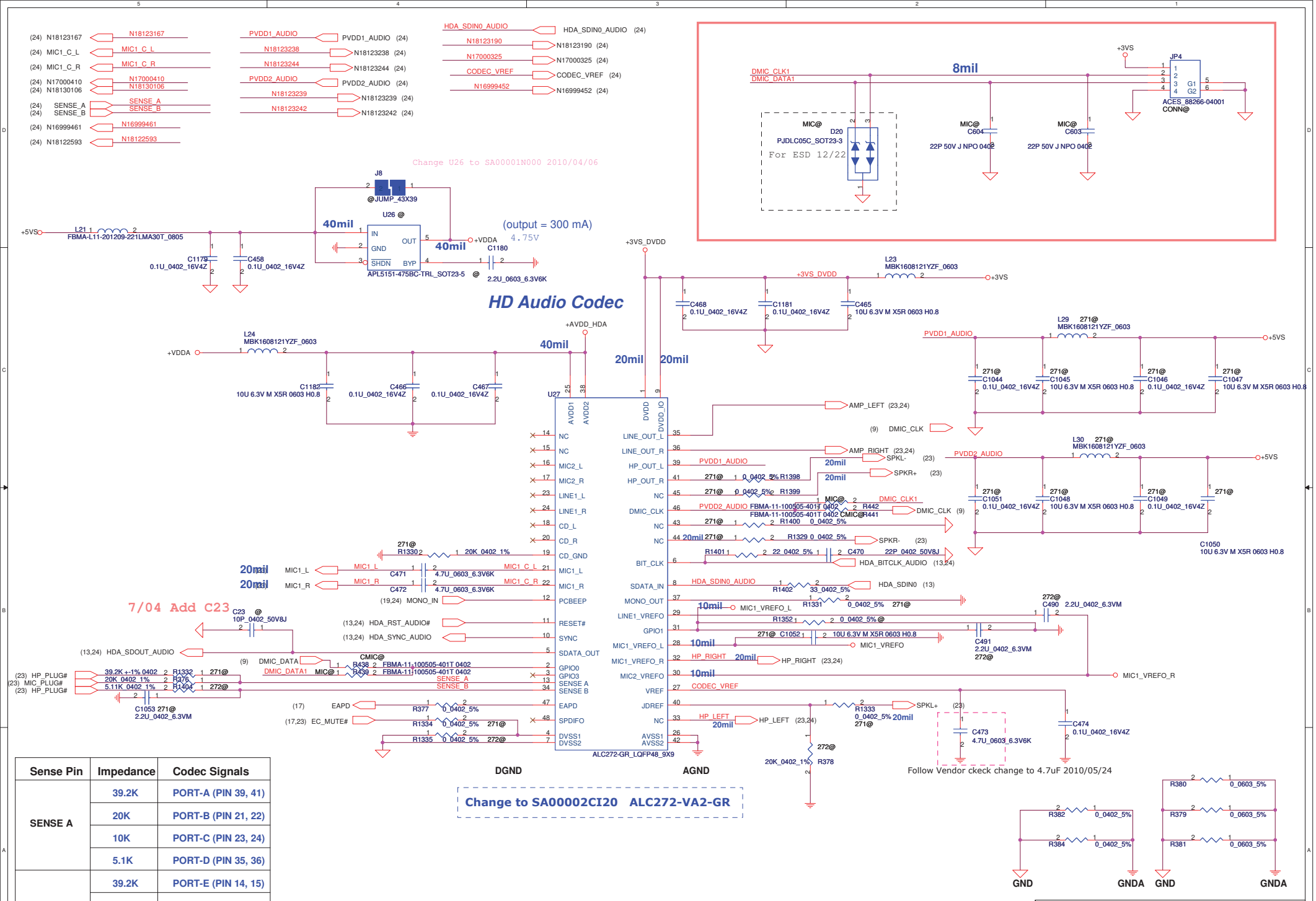

Sense Pin	Impedance	Codec Signals
SENSE A	39.2K	PORT-A (PIN 39, 41)
	20K	PORT-B (PIN 21, 22)
	10K	PORT-C (PIN 23, 24)
	5.1K	PORT-D (PIN 35, 36)
SENSE B	39.2K	PORT-E (PIN 14, 15)
	20K	PORT-F (PIN 16, 17)
	10K	PORT-G (PIN 43, 44)
	5.1K	PORT-H (PIN 45, 46)

Compal Electronics, Inc.

Title: <Title> HD Audio Codec ALC272

Size: Custom | Document Number: LA-6421P LA-6222P | Rev: 0.1

Date: Thursday, June 03, 2010 | Sheet 22 of 39

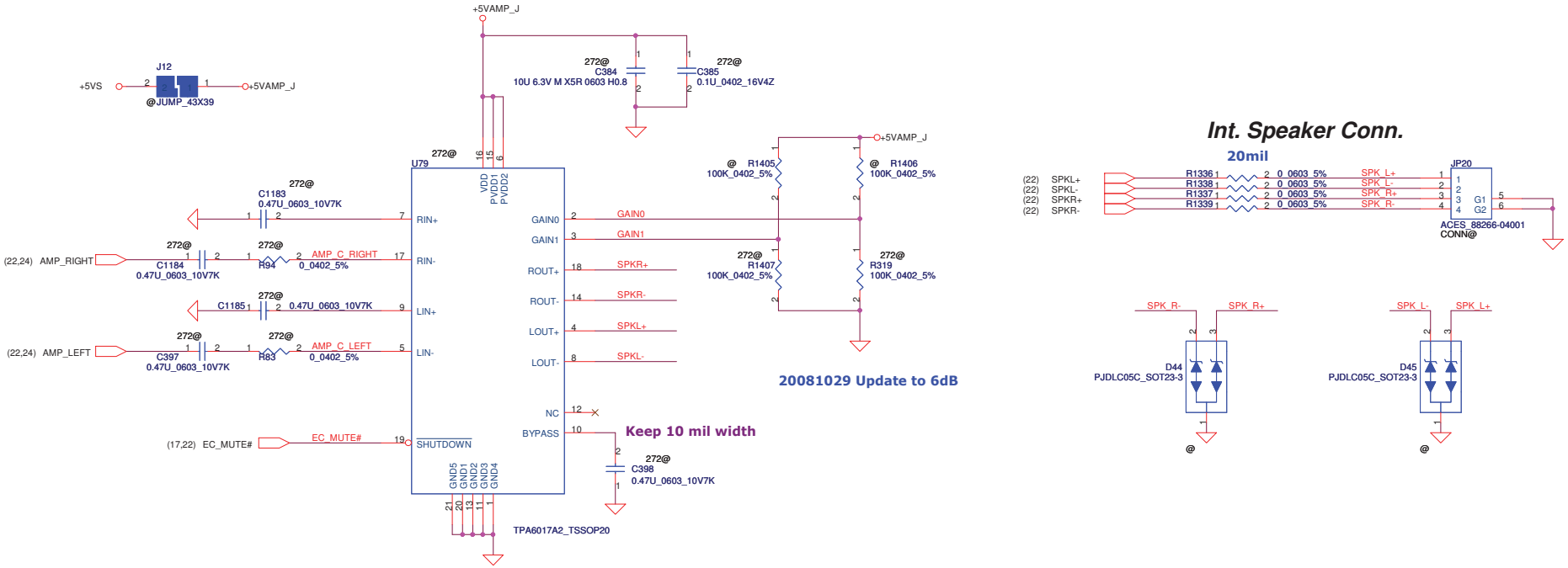

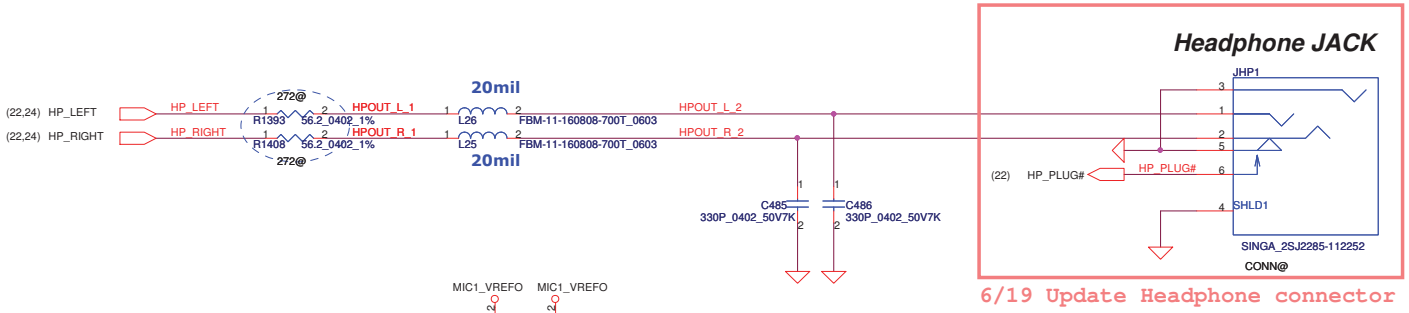

6/19 Update Headphone connector

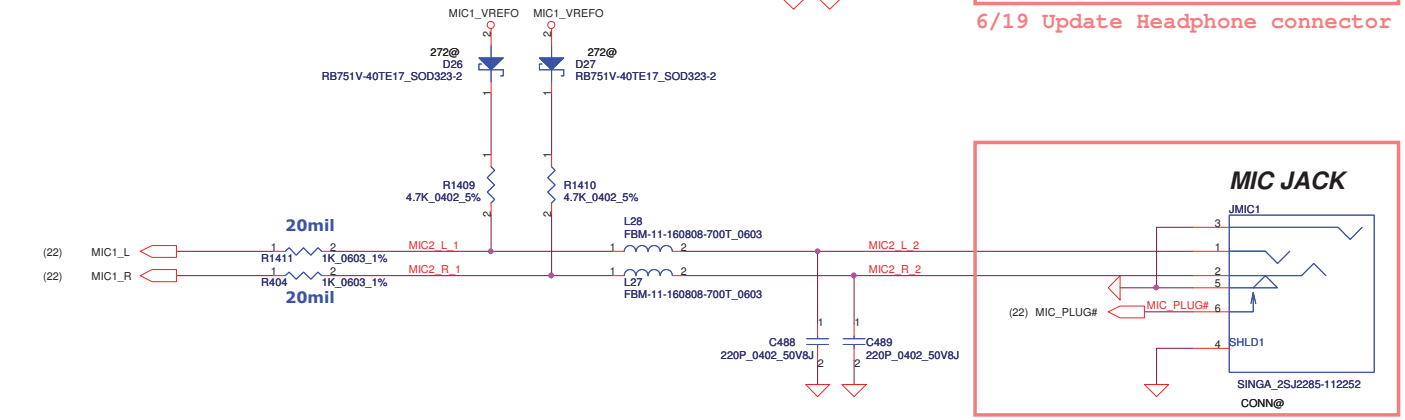

6/19 Update MIC connector

Compal Electronics, Inc.			
Title <Title> Amplifier & Audio Jack			
Size Custom	Document Number LA-6421P LA-6222P		Rev 0.1
Date: Tuesday, June 22, 2010	Sheet 23 of 39		

HD Audio Codec

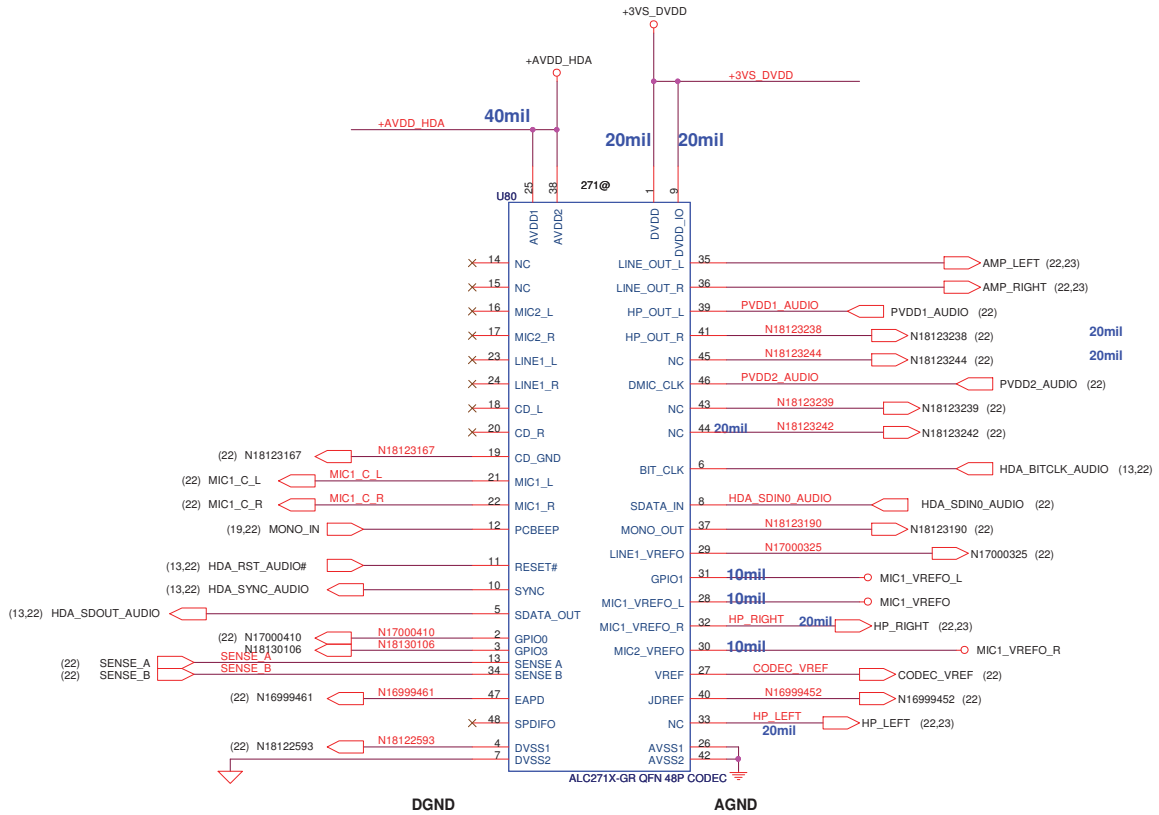

Sense Pin	Impedance	Codec Signals
SENSE A	39.2K	PORT-A (PIN 39, 41)
	20K	PORT-B (PIN 21, 22)
	10K	PORT-C (PIN 23, 24)
	5.1K	PORT-D (PIN 35, 36)
SENSE B	39.2K	PORT-E (PIN 14, 15)
	20K	PORT-F (PIN 16, 17)
	10K	PORT-G (PIN 43, 44)
	5.1K	PORT-H (PIN 45, 46)

Compal Electronics, Inc.

Title	<Title> HD Audio Codec ALC271	
Size Custom	Document Number LA-6421P LA-6222P	Rev 0.1
Date: Thursday, June 03, 2010	Sheet 24 of 39	

Change LAN chip to AR8152-L for NAV70/80 DDR3 2010/01/22

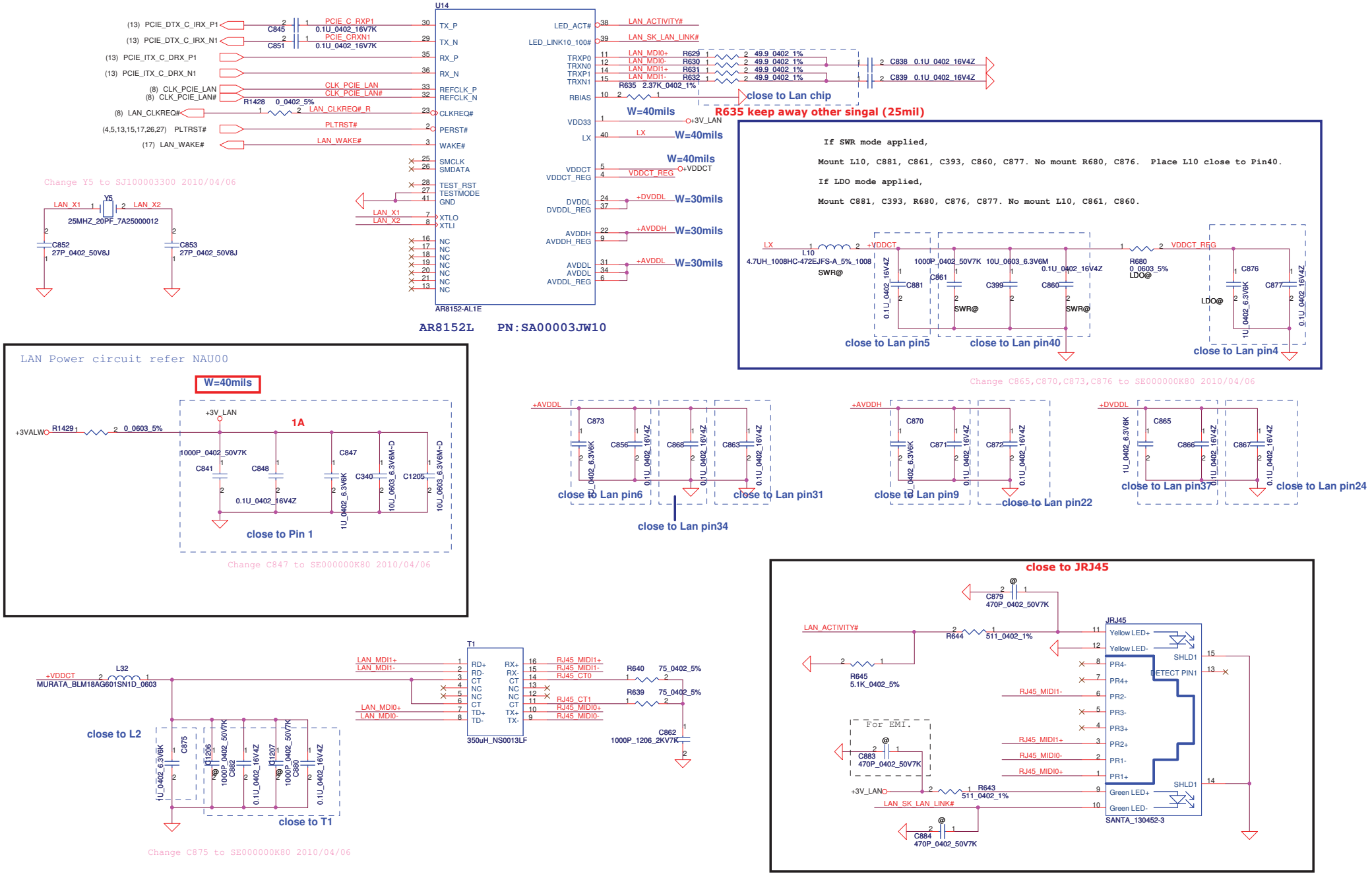

Security Classification	Compal Secret Data		
Issued Date	2009/7/7	Deciphered Date	2010/7/7

THIS SHEET OF ENGINEERING DRAWING IS THE PROPRIETARY PROPERTY OF COMPAL ELECTRONICS, INC. AND CONTAINS CONFIDENTIAL AND TRADE SECRET INFORMATION. THIS SHEET MAY NOT BE TRANSFERED FROM THE CUSTODY OF THE COMPETENT DIVISION OF R&D DEPARTMENT EXCEPT AS AUTHORIZED BY COMPAL ELECTRONICS, INC. NEITHER THIS SHEET NOR THE INFORMATION IT CONTAINS MAY BE USED BY OR DISCLOSED TO ANY THIRD PARTY WITHOUT PRIOR WRITTEN CONSENT OF COMPAL ELECTRONICS, INC.

Compal Electronics, Inc.

Title: LAN AR8152

Size: Custom | Document Number: LA-6421P | Rev: 0.1

Date: Thursday, June 03, 2010 | Sheet 25 of 39

Mini-Express Card for WWAN

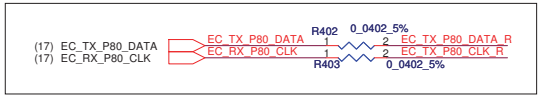

Mini-Express Card for WLAN

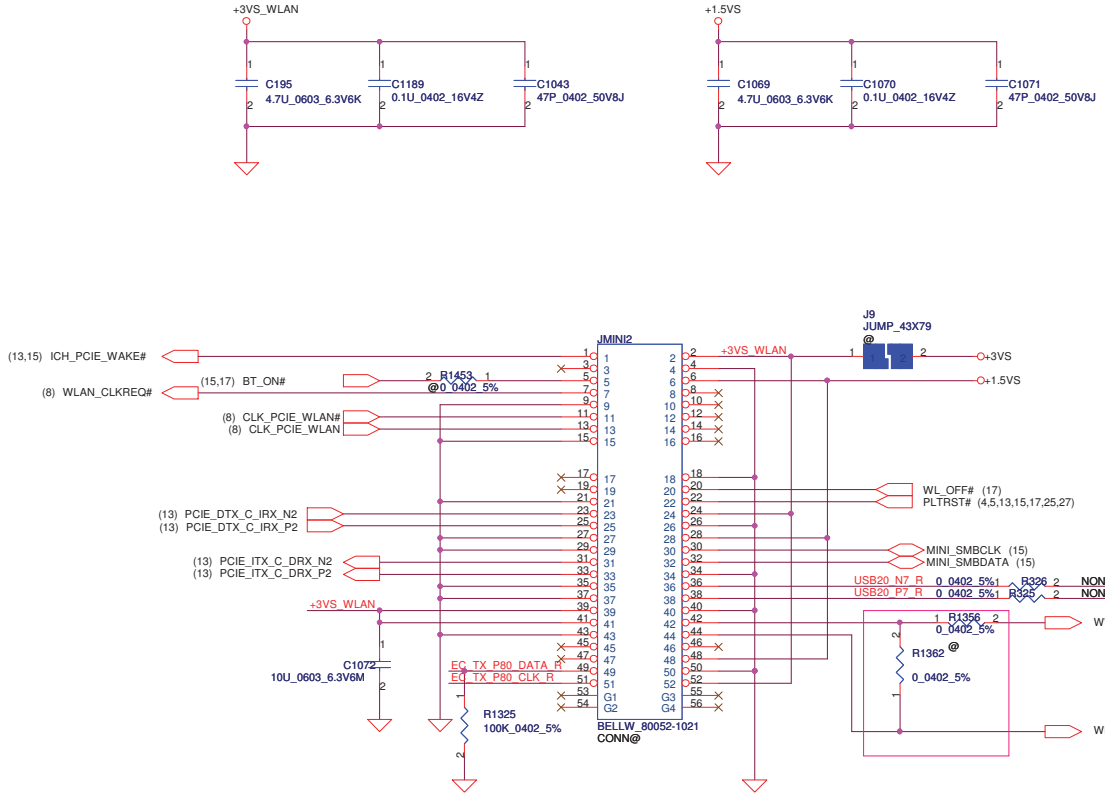

5/12 Update WLAN connector(the same as KAV60)
6/1 Revised 37、39、41、42、43 to NC
6/12 Update connector to DC040006S00
6/26 Update JMINI1 footprint
7/01 update pin 23,25,31,33

Compal Electronics, Inc.		
Title <Title>	WLAN	
Size Custom	Document Number LA-6421P LA-6222P	Rev 0.1
Date: Monday, June 07, 2010	Sheet 26 of 39	

TPM1.2 on board

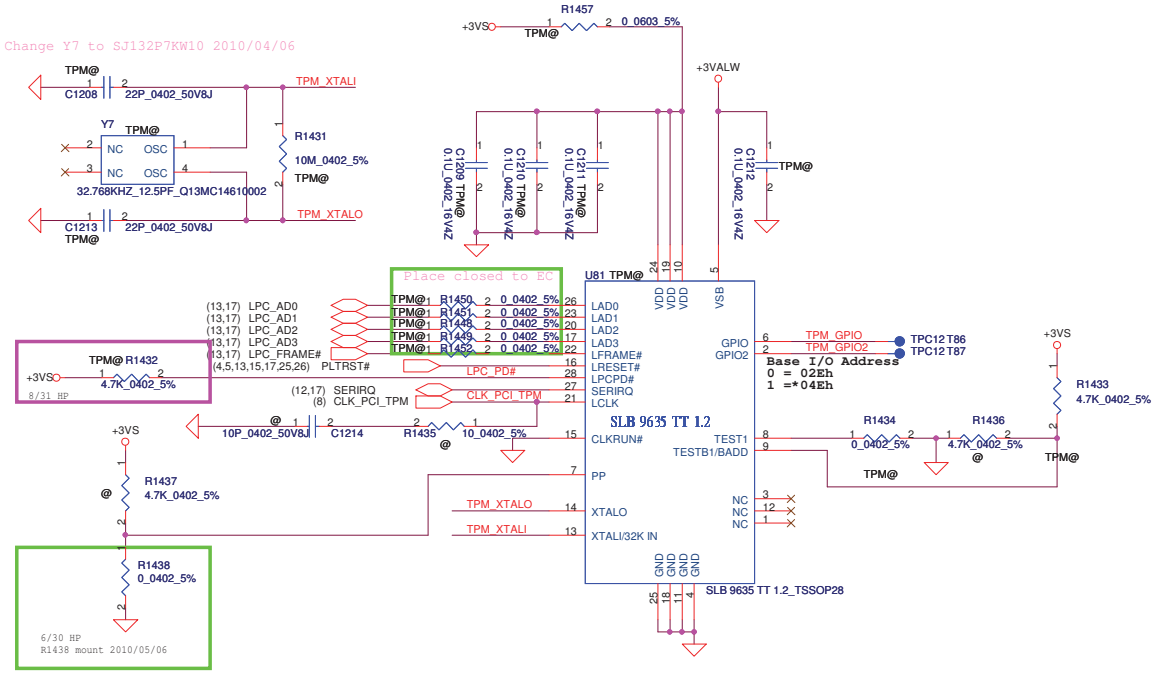

ALS (Ambient Light Sensor)

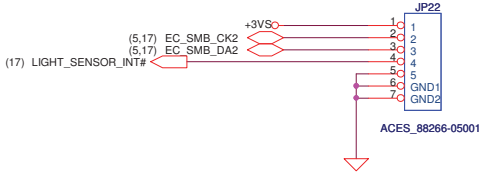

ST LIS33DE(G-Sensor)

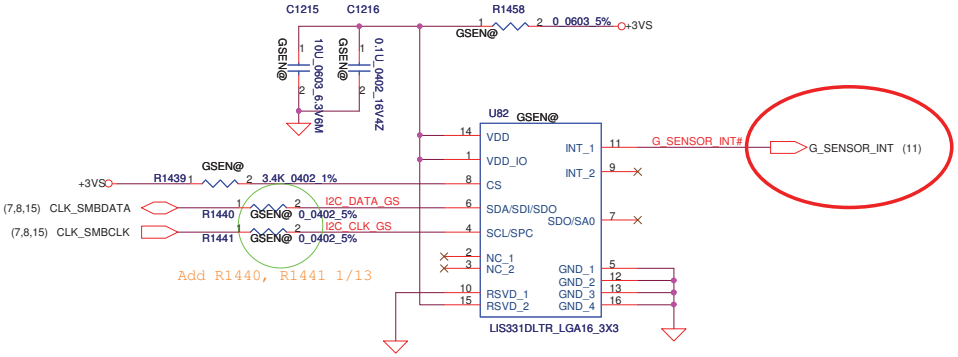

P/N SA00003VT00

Security Classification	Compal Secret Data		
Issued Date	2008/09/15	Deciphered Date	2009/12/31

THIS SHEET OF ENGINEERING DRAWING IS THE PROPRIETARY PROPERTY OF COMPAL ELECTRONICS, INC. AND CONTAINS CONFIDENTIAL AND TRADE SECRET INFORMATION. THIS SHEET MAY NOT BE TRANSFERED FROM THE CUSTODY OF THE COMPETENT DIVISION OF R&D DEPARTMENT EXCEPT AS AUTHORIZED BY COMPAL ELECTRONICS, INC. NEITHER THIS SHEET NOR THE INFORMATION IT CONTAINS MAY BE USED BY OR DISCLOSED TO ANY THIRD PARTY WITHOUT PRIOR WRITTEN CONSENT OF COMPAL ELECTRONICS, INC.

Compal Electronics, Inc.

Title: **TPM/G-Sensor/Light sensor**

Size: | Document Number: **LA-6421P** | Rev: 0.1

Date: Thursday, June 03, 2010 | Sheet 27 of 39

Modify Hole location by (ME Drawing 06/12) 0615

H_3P2X3P7N H8 H

H_2P6 H16 H H9 H H1 H

H7 H H17 H

09/03 Del H12

H_3P2 H18 H H19 H

H_3P2 H3 H

H_3P3N H11 H

H_3P4X3P2N H20 H

H_2P8 H2 H_2P8 H23 H_2P8 H4 H_2P8

H_3P2N H5 H_3P2N

H_3P2X3P5N H22 H_3P2x3P5N

H_3P4X3P2N H24 H_3P4X3P2N

FM2 FM4 FM3 FM1 FIDUCIAL_C40M80

Security Classification	Compal Secret Data			Compal Electronics, Inc.
Issued Date	2006/08/18	Deciphered Date	2007/8/18	Title: Screw
				Size: B; Document Number: LA-6421P; Rev: 0.1
				Date: Thursday, March 25, 2010; Sheet 28 of 39

THIS SHEET OF ENGINEERING DRAWING IS THE PROPRIETARY PROPERTY OF COMPAL ELECTRONICS, INC. AND CONTAINS CONFIDENTIAL AND TRADE SECRET INFORMATION. THIS SHEET MAY NOT BE TRANSFERED FROM THE CUSTODY OF THE COMPETENT DIVISION OF R&D DEPARTMENT EXCEPT AS AUTHORIZED BY COMPAL ELECTRONICS, INC. NEITHER THIS SHEET NOR THE INFORMATION IT CONTAINS MAY BE USED BY OR DISCLOSED TO ANY THIRD PARTY WITHOUT PRIOR WRITTEN CONSENT OF COMPAL ELECTRONICS, INC.

Change R51 R57 R70 R63 R317 R114 R190 to 0402 SIZE 04/30
Change C221 C218 C223 C 191 C201 C170 C392 C393 C394 to 0603 SIZE 04/30

+5VALW TO +5VS

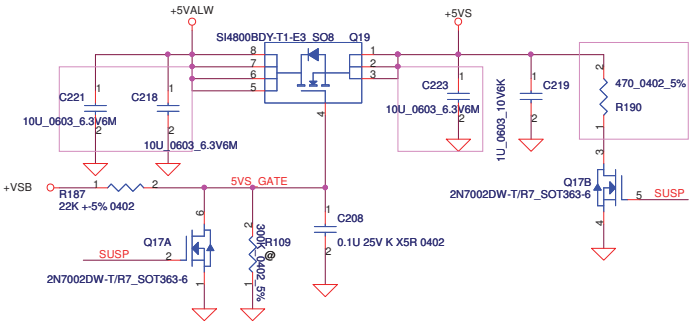

+3VALW TO +3VS

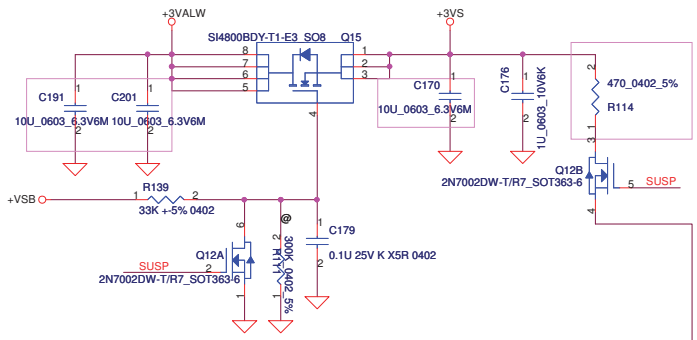

Change Q12,Q14,Q17,Q28 to SB00000DH00 2010/04/06

Change C176,C219,C395 to SE080105K80 2010/04/06

+1.5V to +1.5VS

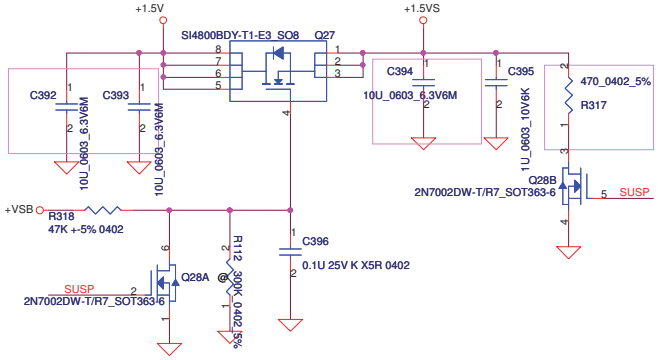

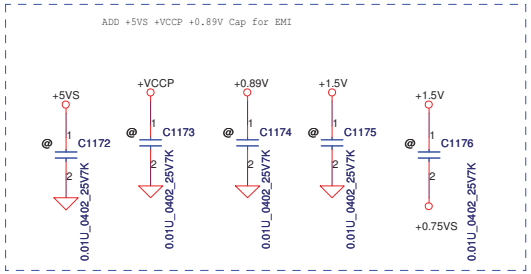

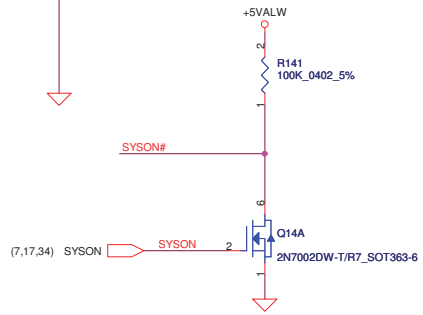

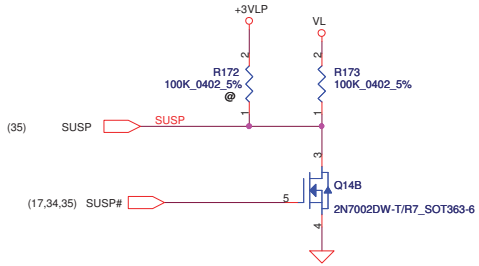

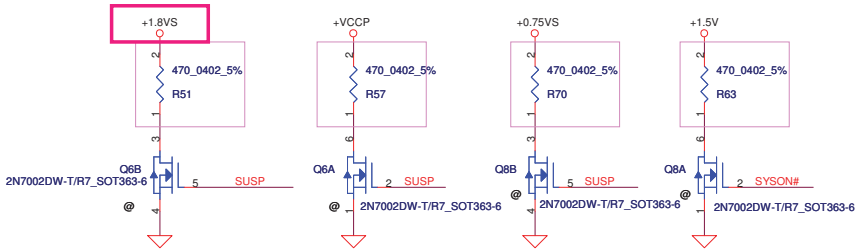

Change Q6,Q8 to SB00000DH00 2010/04/06

Security Classification	Compal Secret Data		
Issued Date	2006/08/18	Deciphered Date	2007/8/18

THIS SHEET OF ENGINEERING DRAWING IS THE PROPRIETARY PROPERTY OF COMPAL ELECTRONICS, INC. AND CONTAINS CONFIDENTIAL AND TRADE SECRET INFORMATION. THIS SHEET MAY NOT BE TRANSFERED FROM THE CUSTODY OF THE COMPETENT DIVISION OF R&D DEPARTMENT EXCEPT AS AUTHORIZED BY COMPAL ELECTRONICS, INC. NEITHER THIS SHEET NOR THE INFORMATION IT CONTAINS MAY BE USED BY OR DISCLOSED TO ANY THIRD PARTY WITHOUT PRIOR WRITTEN CONSENT OF COMPAL ELECTRONICS, INC.

Compal Electronics, Inc.

Title: DC INTERFACE

Size: B | Document Number: LA-6421P | Rev: 0.1

Date: Thursday, June 03, 2010 | Sheet 29 of 39

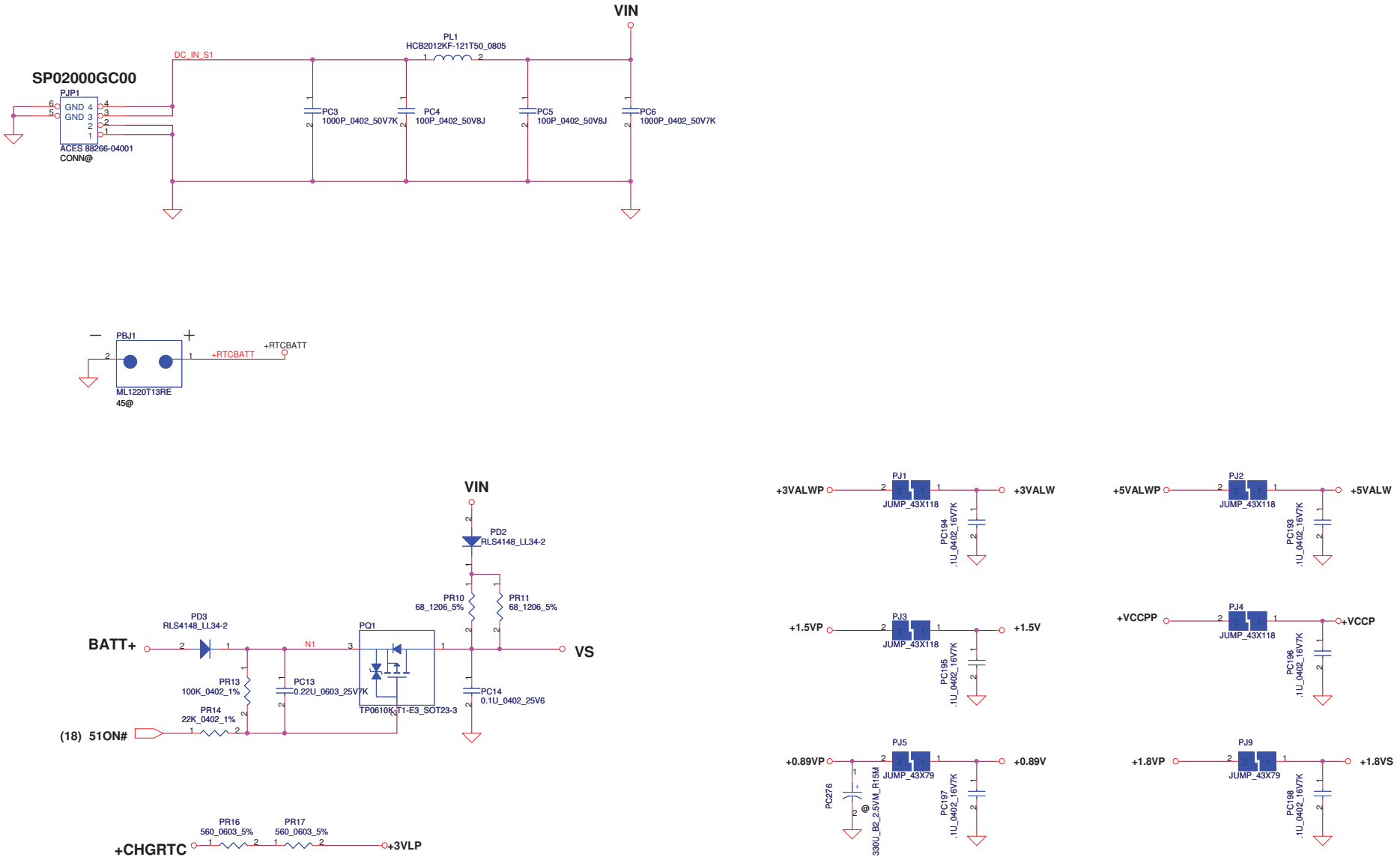

Security Classification	Compal Secret Data		
Issued Date	2007/09/20	Deciphered Date	2008/09/20

THIS SHEET OF ENGINEERING DRAWING IS THE PROPRIETARY PROPERTY OF COMPAL ELECTRONICS, INC. AND CONTAINS CONFIDENTIAL AND TRADE SECRET INFORMATION. THIS SHEET MAY NOT BE TRANSFERED FROM THE CUSTODY OF THE COMPETENT DIVISION OF R&D DEPARTMENT EXCEPT AS AUTHORIZED BY COMPAL ELECTRONICS, INC. NEITHER THIS SHEET NOR THE INFORMATION IT CONTAINS MAY BE USED BY OR DISCLOSED TO ANY THIRD PARTY WITHOUT PRIOR WRITTEN CONSENT OF COMPAL ELECTRONICS, INC.

Compal Electronics, Inc.

Title: DCIN & DETECTOR

Size: Custom | Document Number: LA-6421P | Rev: 0.1

Date: Tuesday, June 22, 2010 | Sheet 30 of 39

PH1 under CPU botten side :
CPU thermal protection at 92 degree C
Recovery at 72 degree C

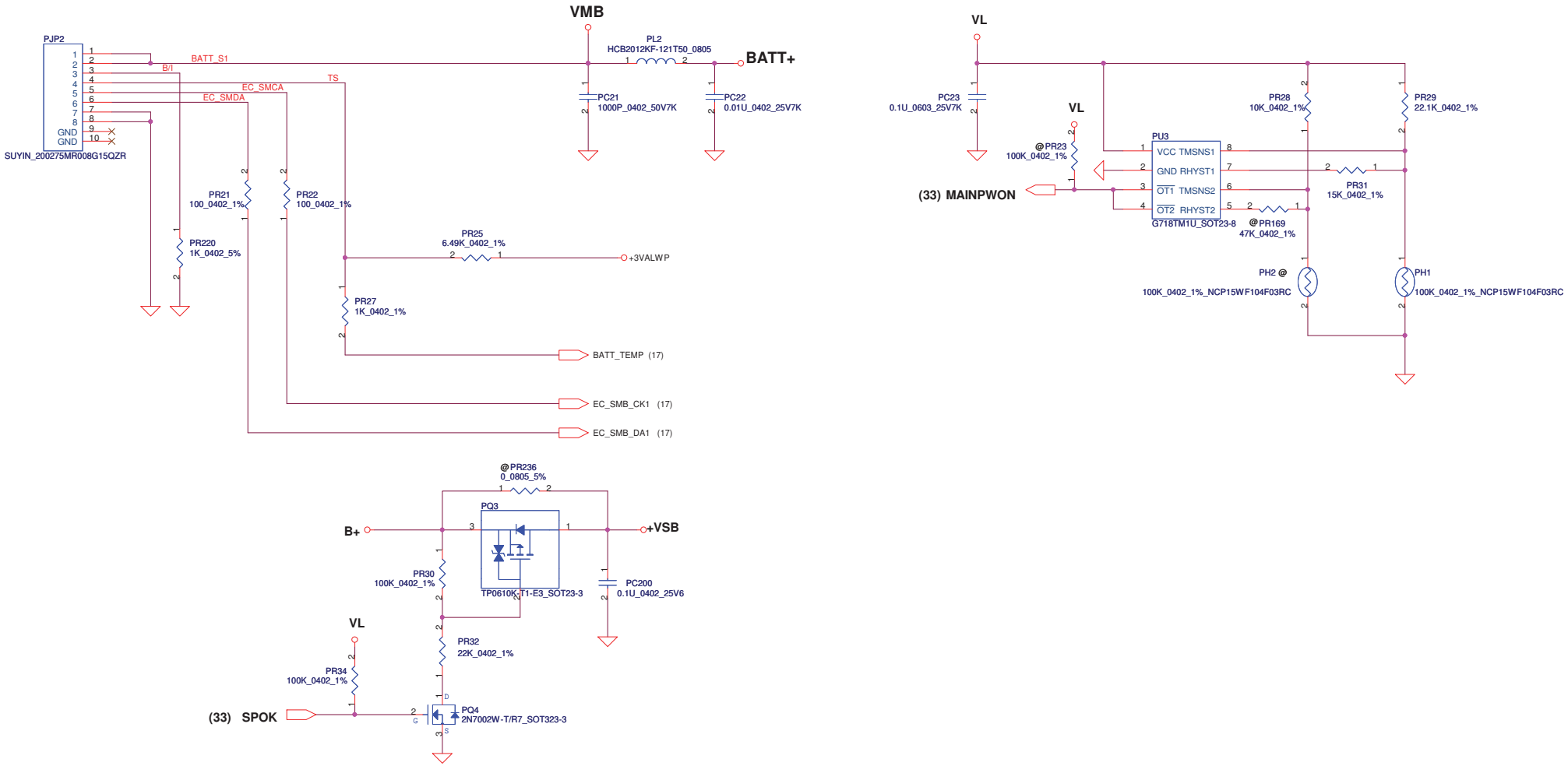

Security Classification	Compal Secret Data		
Issued Date	2007/09/20	Deciphered Date	2008/09/20

THIS SHEET OF ENGINEERING DRAWING IS THE PROPRIETARY PROPERTY OF COMPAL ELECTRONICS, INC. AND CONTAINS CONFIDENTIAL AND TRADE SECRET INFORMATION. THIS SHEET MAY NOT BE TRANSFERED FROM THE CUSTODY OF THE COMPETENT DIVISION OF R&D DEPARTMENT EXCEPT AS AUTHORIZED BY COMPAL ELECTRONICS, INC. NEITHER THIS SHEET NOR THE INFORMATION IT CONTAINS MAY BE USED BY OR DISCLOSED TO ANY THIRD PARTY WITHOUT PRIOR WRITTEN CONSENT OF COMPAL ELECTRONICS, INC.

Compal Electronics, Inc.

Title: BATTERY CONN / OTP

Size: Custom | Document Number: LA-6421P | Rev: 0.1

Date: Tuesday, June 22, 2010 | Sheet 31 of 39

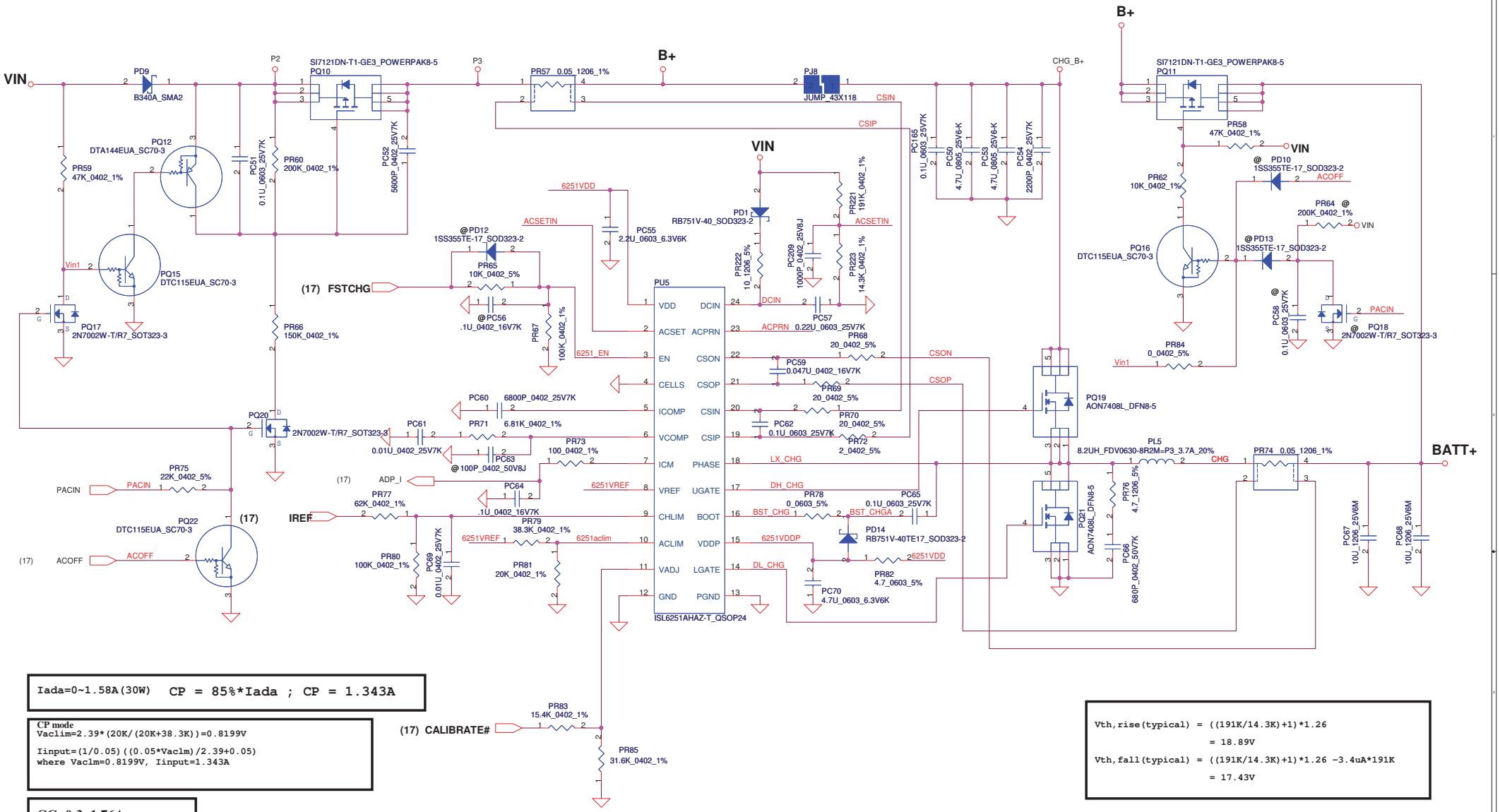


```
Iada=0~1.58A(30W)   CP = 85%*Iada ; CP = 1.343A
```

```
CP mode
Vaclim=2.39*(20K/(20K+38.3K))=0.8199V

Iinput=(1/0.05)((0.05*Vaclm)/2.39+0.05)
where Vaclm=0.8199V, Iinput=1.343A
```

```
Vth,rise(typical) = ((191K/14.3K)+1)*1.26
                  = 18.89V
Vth,fall(typical) = ((191K/14.3K)+1)*1.26 -3.4uA*191K
                  = 17.43V
```

CC=0.3~1.76A
IREF=1.62*Icharge
IREF=0.486V~2.85V
3.24V==>2A

BATT Type	Charging Voltage (0x15)	CV mode
Normal 3S LI-ON Cells	12600mV	12.60V

```
VADJ-->VREF-->4.41V
VADJ--->Ground--->3.99V
Vcell=(0.175*VADJ+3.99)
```

Security Classification	Compal Secret Data		
Issued Date	2007/09/20	Deciphered Date	2008/09/20

THIS SHEET OF ENGINEERING DRAWING IS THE PROPRIETARY PROPERTY OF COMPAL ELECTRONICS, INC. AND CONTAINS CONFIDENTIAL AND TRADE SECRET INFORMATION. THIS SHEET MAY NOT BE TRANSFERED FROM THE CUSTODY OF THE COMPETENT DIVISION OF R&D DEPARTMENT EXCEPT AS AUTHORIZED BY COMPAL ELECTRONICS, INC. NEITHER THIS SHEET NOR THE INFORMATION IT CONTAINS MAY BE USED BY OR DISCLOSED TO ANY THIRD PARTY WITHOUT PRIOR WRITTEN CONSENT OF COMPAL ELECTRONICS, INC.

Compal Electronics, Inc.

Title: CHARGER

Size: Custom | Document Number: LA-6421P | Rev: 0.1

Date: Tuesday, June 22, 2010 | Sheet 32 of 39

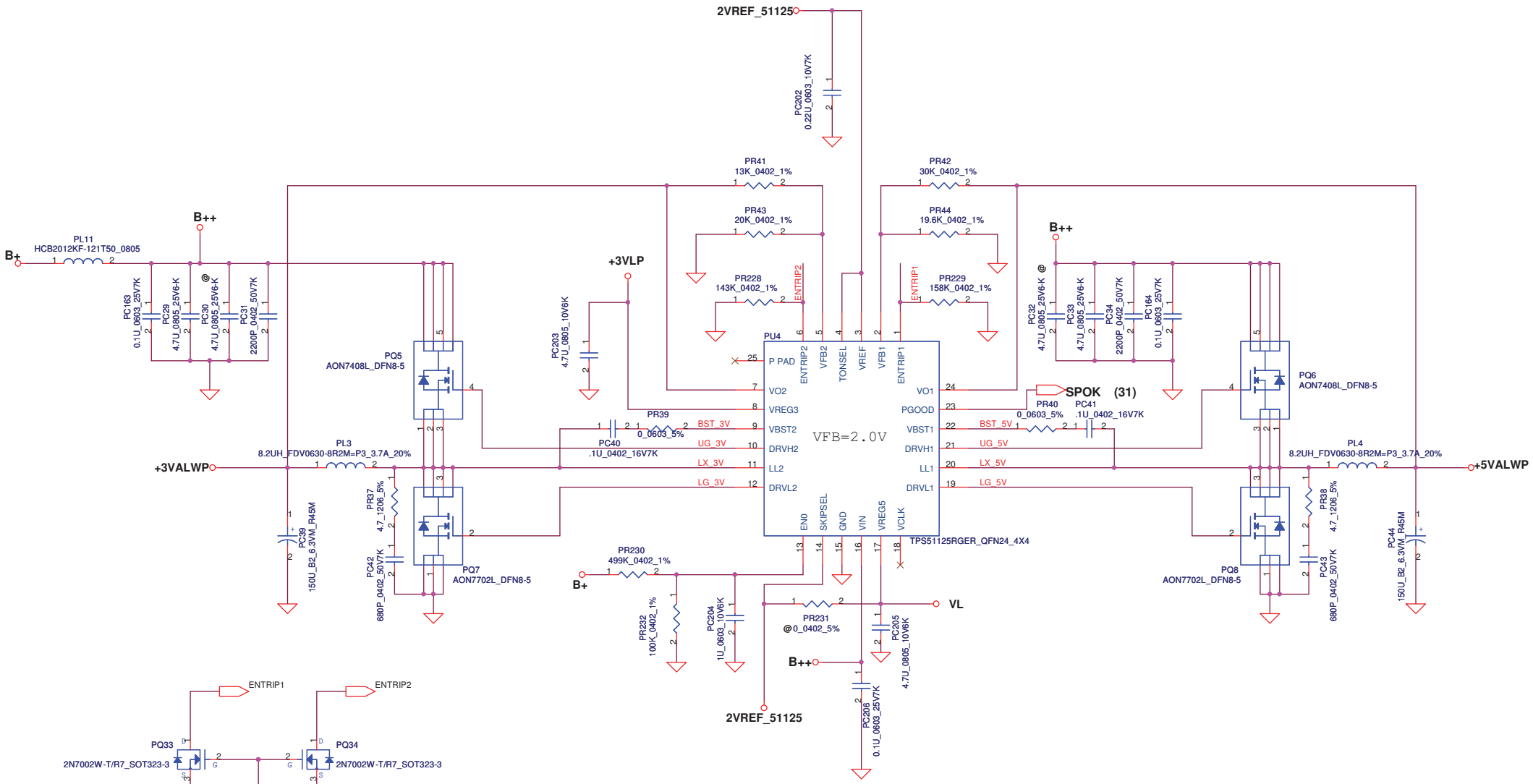


```
+3.3VALWP Ipeak=5.731A  Imax=4.012A
Rds(on)=17.9m ohm(max) ; Rds(on)=14.5m ohm(typical)
Vtrip=(10E-06 * 130K)/9-24mV=134.9mV
Ilimit=134.9mV/17.9m ~134.9mV/14.5m x 1.2
       =7.536A ~ 7.752A
Iocp=Ilimit+Delta I/2
       =8.081A ~ 8.297A
Delta I=1.090A (Freq=305KHz)
```

```
+5VALWP   Ipeak=7.0A  Imax=4.9A
Rds(on)=17.9m ohm(max) ; Rds(on)=14.5m ohm(typical)
Vtrip=(10E-06 * 147K)/9-24mV=151mV
Ilimit=151mV/17.9m ~151mV/14.5m x 1.2
       =8.467A ~ 8.710A
Iocp=Ilimit+Delta I/2
       =9.384A ~ 9.627A
Delta I=1.834A (Freq=245KHz)
```

Security Classification	Compal Secret Data		
Issued Date	2007/11/12	Deciphered Date	2008/11/12

THIS SHEET OF ENGINEERING DRAWING IS THE PROPRIETARY PROPERTY OF COMPAL ELECTRONICS, INC. AND CONTAINS CONFIDENTIAL AND TRADE SECRET INFORMATION. THIS SHEET MAY NOT BE TRANSFERED FROM THE CUSTODY OF THE COMPETENT DIVISION OF R&D DEPARTMENT EXCEPT AS AUTHORIZED BY COMPAL ELECTRONICS, INC. NEITHER THIS SHEET NOR THE INFORMATION IT CONTAINS MAY BE USED BY OR DISCLOSED TO ANY THIRD PARTY WITHOUT PRIOR WRITTEN CONSENT OF COMPAL ELECTRONICS, INC.

Compal Electronics, Inc.

Title: +5V/+3V

Size: Custom | Document Number: LA-6421P | Rev: 0.1

Date: Tuesday, June 22, 2010 | Sheet 33 of 39

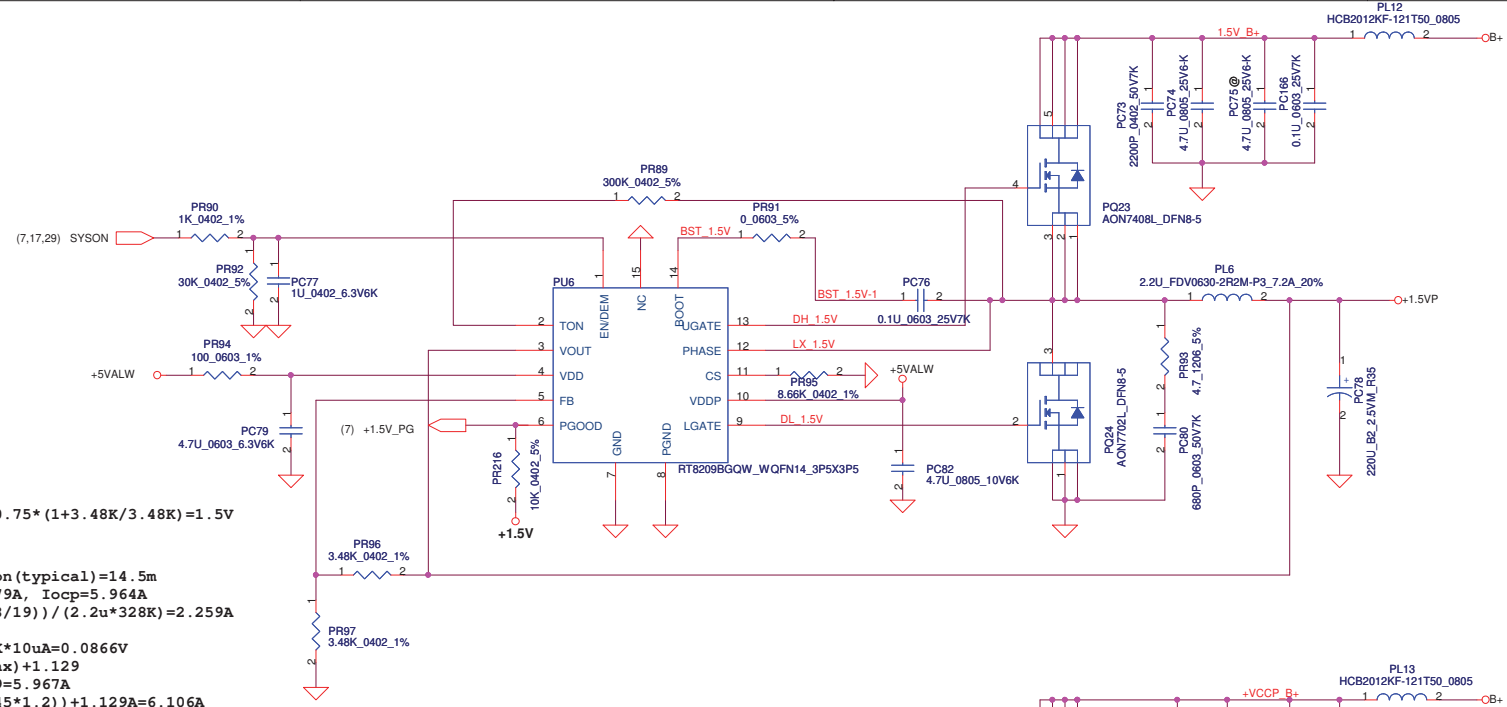

<Vo=1.5V> VFB=0.75V
Vo=VFB*(1+PR96/PR97)=0.75*(1+3.48K/3.48K)=1.5V
Fsw=328KHz

Cout ESR=15m ohm
Rdson(max)=17.9m Rdson(typical)=14.5m
Ipeak=4.97A, Imax=3.479A, Iocp=5.964A
Delta I=((19-1.8)*(1.8/19))/(2.2u*328K)=2.259A
=>1/2DeltaI=1.129A
Vtrip=Rtrip*10uA=8.66K*10uA=0.0866V
Iocpmin=Vtrip/(Rdsonmax)+1.129
=0.0866/(0.0179)+1.129=5.967A
Iocpmax=(0.0866/(0.0145*1.2))+1.129A=6.106A
Iocp=5.967A~6.106A

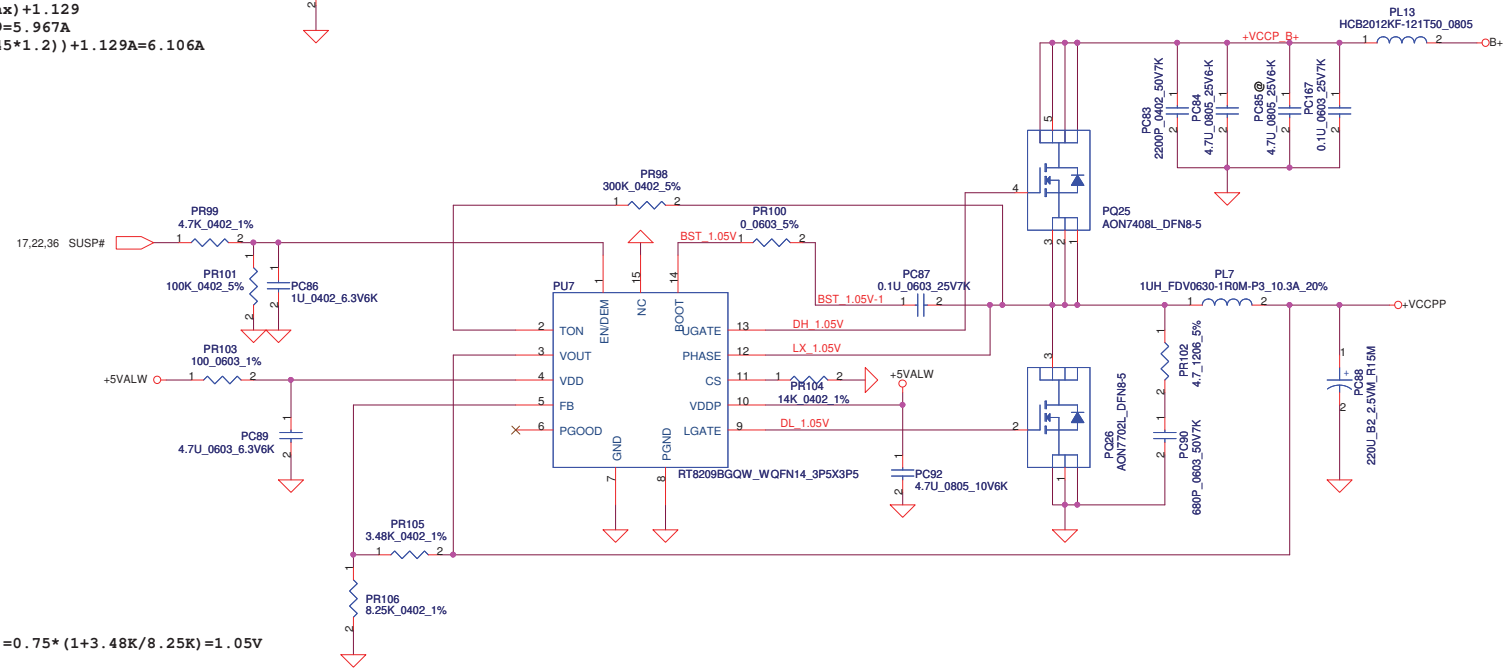

<Vo=1.05V> VFB=0.75V
Vo=VFB*(1+PR105/PR106)=0.75*(1+3.48K/8.25K)=1.05V
Fsw=280KHz

Cout ESR=15m ohm Rdson(max)=17.9m Rdson(typical)=14.5m
Ipeak=3.124A, Imax=2.187A, Iocp=3.749A
Delta I=((19-1.05)*(1.05/19))/(1.5u*280K)=3.549A
=>1/2DeltaI=1.774A
Vtrip=Rtrip*10uA=14K*10uA=0.14V
Iocpmin=Vtrip/(Rdsonmax)+1.774
=0.14/(0.0179)+1.774=9.596A
Iocpmax=(0.14/(0.0145*1.2))+1.774A=9.820A
Iocp=9.596A~9.820A

Security Classification	Compal Secret Data		
Issued Date	2007/09/20	Deciphered Date	2008/09/20

THIS SHEET OF ENGINEERING DRAWING IS THE PROPRIETARY PROPERTY OF COMPAL ELECTRONICS, INC. AND CONTAINS CONFIDENTIAL AND TRADE SECRET INFORMATION. THIS SHEET MAY NOT BE TRANSFERED FROM THE CUSTODY OF THE COMPETENT DIVISION OF R&D DEPARTMENT EXCEPT AS AUTHORIZED BY COMPAL ELECTRONICS, INC. NEITHER THIS SHEET NOR THE INFORMATION IT CONTAINS MAY BE USED BY OR DISCLOSED TO ANY THIRD PARTY WITHOUT PRIOR WRITTEN CONSENT OF COMPAL ELECTRONICS, INC.

Compal Electronics, Inc.

Title: 1.5VP / +VCCPP

Size: Custom | Document Number: LA-6421P | Rev: 0.1

Date: Tuesday, June 22, 2010 | Sheet 34 of 39

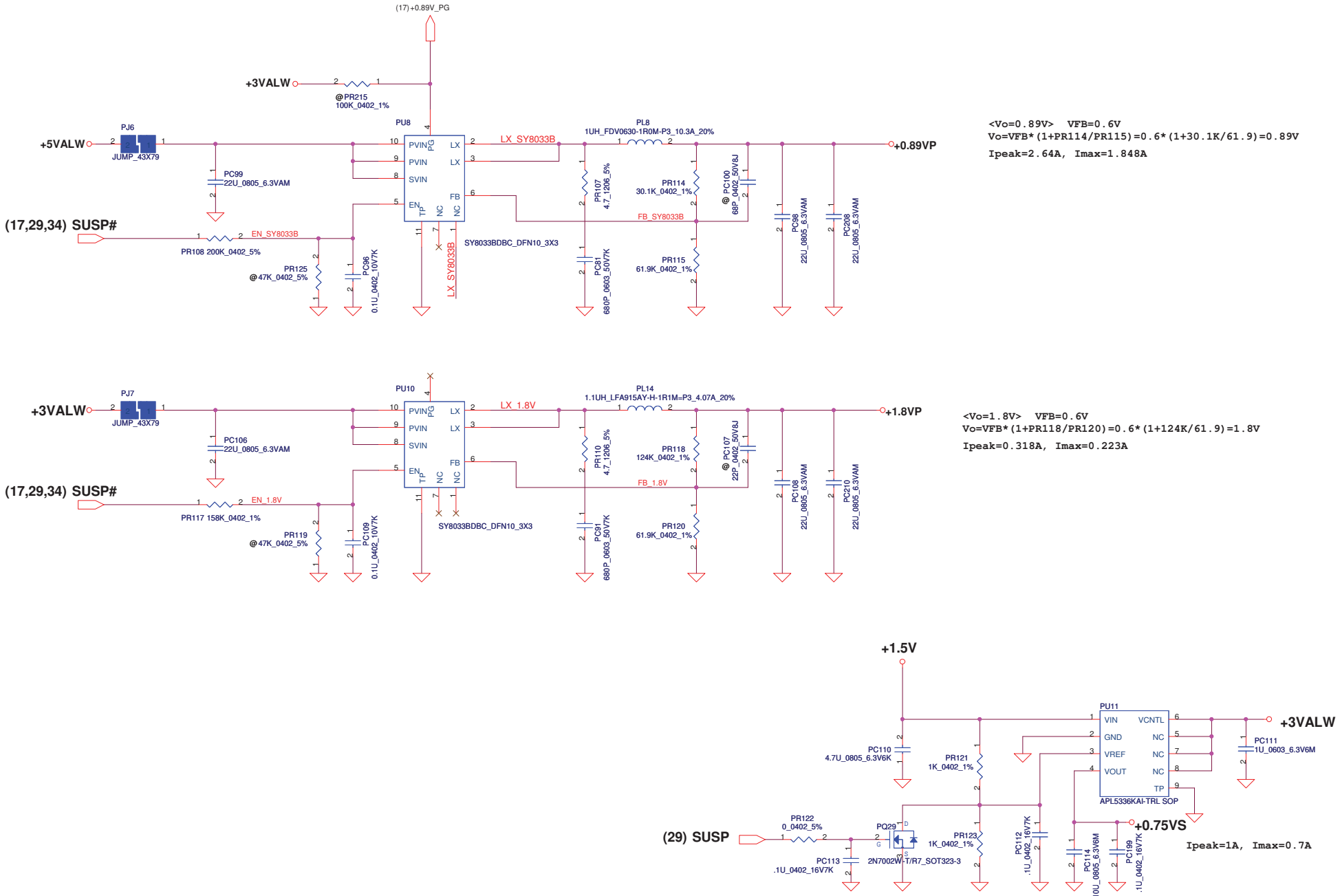

Security Classification	Compal Secret Data		
Issued Date	2007/09/20	Deciphered Date	2008/09/20

THIS SHEET OF ENGINEERING DRAWING IS THE PROPRIETARY PROPERTY OF COMPAL ELECTRONICS, INC. AND CONTAINS CONFIDENTIAL AND TRADE SECRET INFORMATION. THIS SHEET MAY NOT BE TRANSFERED FROM THE CUSTODY OF THE COMPETENT DIVISION OF R&D DEPARTMENT EXCEPT AS AUTHORIZED BY COMPAL ELECTRONICS, INC. NEITHER THIS SHEET NOR THE INFORMATION IT CONTAINS MAY BE USED BY OR DISCLOSED TO ANY THIRD PARTY WITHOUT PRIOR WRITTEN CONSENT OF COMPAL ELECTRONICS, INC.

Compal Electronics, Inc.

Title: +0.89VP/+1.8VP/+0.75VS

Size: Custom | Document Number: LA-6421P | Rev: 0.1

Date: Tuesday, June 22, 2010 | Sheet 35 of 39

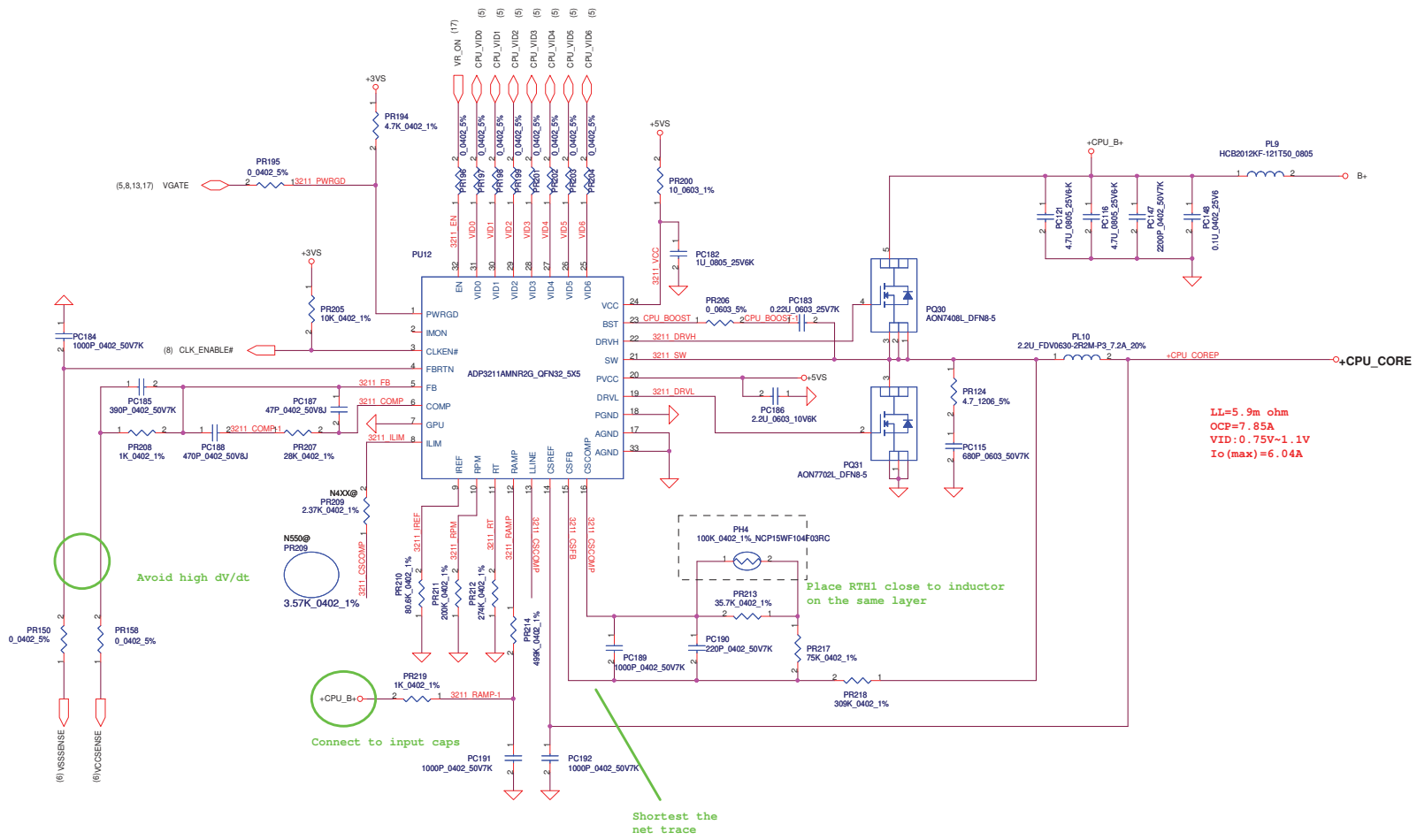

Security Classification	Compal Secret Data			Compal Electronics, Inc.
Issued Date	2007/09/20	Deciphered Date	2008/09/20	Title: +CPU_CORE
				Size: C; Document Number: LA-6421P; Rev: 0.1
				Date: Tuesday, June 22, 2010; Sheet 36 of 39

THIS SHEET OF ENGINEERING DRAWING IS THE PROPRIETARY PROPERTY OF COMPAL ELECTRONICS, INC. AND CONTAINS CONFIDENTIAL AND TRADE SECRET INFORMATION. THIS SHEET MAY NOT BE TRANSFERED FROM THE CUSTODY OF THE COMPETENT DIVISION OF R&D DEPARTMENT EXCEPT AS AUTHORIZED BY COMPAL ELECTRONICS, INC. NEITHER THIS SHEET NOR THE INFORMATION IT CONTAINS MAY BE USED BY OR DISCLOSED TO ANY THIRD PARTY WITHOUT PRIOR WRITTEN CONSENT OF COMPAL ELECTRONICS, INC.

Version change list (P.I.R. List)

Item	Fixed Issue	Reason for change	Rev.	PG#	Modify List	Date	Phase
1	Change power solution	For design change	0.1	34	Change PU7 from SA000031D00(S IC RT8209BGQW WQFN 14P PWM) to SA00003RU00(S IC SY8033BDBC DFN 10P SINGLE BUCK)	2010.5.03	DVT
2	Change PU8 SY8033B Pin1 net	For design change	0.1	34	Change PU8 SY8033B Pin1 connect Pin2 & Pin3	2010.5.03	DVT
3	Change PC100	For design change	0.1	34	Change PC100 to SE071680J80 (S CER CAP 68P 50V J NPO 0402)	2010.5.03	DVT
4	Change PR105	For design change	0.1	32	Change PR105 from SD034100200(S RES 1/16W 10K +-1% 0402) to SD034100280 (S RES 1/16W 10K +-1% 0402)	2010.5.13	DVT
5	Change PC30 & PC32 to non-pop	For cost down plan	0.1	33		2010.6.2	PVT
6	Change PL3,PL4,PL5,PL6,PL7,PL8, PL10,PL14	For TMP choke shortage issue	0.1		Change PL3,PL4,PL5 from SH00000JI00 to SH00000BS00 Change PL6,PL10 from SH00000FD10 to SH000000700 Change PL7,PL8 from SH00000J300 to SH000007N00 Change PL14 from SH00000IS00 to SH00000HY00	2010.6.2	PVT
7	Change power solution	For design change	0.1	34	Change PU7 fromSA00003RU00(S IC SY8033BDBC DFN 10P SINGLE BUCK) to SA000031D00(S IC RT8209BGQW WQFN 14P PWM)	2010.6.8	PVT
8	Change PD10.PD13.PC58.PR64. PQ18 to non-pop Change PR84 to pop	For cost down plan	0.1	33		2010.6.10	PVT
9	Modify CPU CORE OCP for N550	Design change for N550 CPU	0.1	32	Add PR209 = SD034357180 (3.57K_0402_1%) @N550 PR209 = SD034357180 (2.37K_0402_1%) @N4XX series	2010.6.10	PVT
10							
11							
12							
13							
14							
15							
16							
17							
18							
19							
20							
21							

Security Classification	Compal Secret Data		
Issued Date	2007/09/20	Deciphered Date	2008/09/20

THIS SHEET OF ENGINEERING DRAWING IS THE PROPRIETARY PROPERTY OF COMPAL ELECTRONICS, INC. AND CONTAINS CONFIDENTIAL AND TRADE SECRET INFORMATION. THIS SHEET MAY NOT BE TRANSFERED FROM THE CUSTODY OF THE COMPETENT DIVISION OF R&D DEPARTMENT EXCEPT AS AUTHORIZED BY COMPAL ELECTRONICS, INC. NEITHER THIS SHEET NOR THE INFORMATION IT CONTAINS MAY BE USED BY OR DISCLOSED TO ANY THIRD PARTY WITHOUT PRIOR WRITTEN CONSENT OF COMPAL ELECTRONICS, INC.

Compal Electronics, Inc.

Title: PIR (PWR)

Size: Custom | Document Number: LA-6421P | Rev: 0.1

Date: Tuesday, June 22, 2010 | Sheet 37 of 39

Version change list (P.I.R. List)

Item	Fixed Issue	Reason for change	Rev.	PG#	Modify List	Date	Phase
1							
2							
3							
4							
5							
6							
7							
8							
9							
10							
11							
12							
13							
14							
15							
16							
17							
18							
19							
20							
21							
22							
23							

Security Classification	Compal Secret Data		
Issued Date	2007/09/20	Deciphered Date	2008/09/20

THIS SHEET OF ENGINEERING DRAWING IS THE PROPRIETARY PROPERTY OF COMPAL ELECTRONICS, INC. AND CONTAINS CONFIDENTIAL AND TRADE SECRET INFORMATION. THIS SHEET MAY NOT BE TRANSFERED FROM THE CUSTODY OF THE COMPETENT DIVISION OF R&D DEPARTMENT EXCEPT AS AUTHORIZED BY COMPAL ELECTRONICS, INC. NEITHER THIS SHEET NOR THE INFORMATION IT CONTAINS MAY BE USED BY OR DISCLOSED TO ANY THIRD PARTY WITHOUT PRIOR WRITTEN CONSENT OF COMPAL ELECTRONICS, INC.

Compal Electronics, Inc.

Title: PIR (PWR)

Size: Custom | Document Number: LA-6421P | Rev: 0.1

Date: Tuesday, June 22, 2010 | Sheet 38 of 39

<2010/03/25>
. P06 - Add C1217, C1218 for +0.89V
. P08 - Add R1442, R1443
. P09 - Add R1444, R1445 for DMIC
. P10 - L12, L14, L15 change to SM010000200
. P23 - Add JP24 for cardreader connector

<2010/03/26>
. P27 - Add R1448, R1449, R1450,R1451,R1452
JP22 change to SP02000H500

<2010/04/06>
. P10 - Change L12. L14, L15 to SM01000C600
. P26 - Add R1453
. P21 - Change Y6 to SJ100005900
. P25 - Change Y5 to SJ100003300
Change C847,C865,C870,C873,C875,C876 SE000000K80
. P13 - Change X1,Y3,Y7 to SJ132P7KW10
. P22 - Change U26 to SA00001N000
. P29 - Change Q6,Q8,Q10,Q12,Q14,Q17,Q24,Q28 to SB00000DH00
Change C176,C219,C230,C395 to SE080105K80
. P07 - Change C116,C141 to SE076104K80

<2010/04/14>
. P06 - Del C1218 2010/04/14
. P08 - Del C1219, R1442 change Y1 to SJ100009H00
. P27 - Add TPM@ GSEN@ for PAV70

<2010/05/03>
. P04 - R354, R347, R348 nu-mount
. P13 - Change R152 to SD034226A80(22.6ohm_0402)
. P13 - Change R241 to SD028100280(10Kohm_0402)
. P13 - R1376, R1377 nu-mount
. P16 - Add JBATT1 CONN.
. P17 - Change U76 to SA00001V400
. P17 - Change R1292 to SD028820180

<2010/05/04>
. P16 - Change JBATT1 NET to +RTCBATT1
. P27 - Add J15, J16

<2010/05/06>
. P10 - Change L12, L14 and L15 footprint
. P27 - Del J15, J16 ; Add R1457, R1458
. P27 - U81.15 connect to GND

<2010/05/24>
. P04 - Change U71 to SA00003WBA0(N475@) and SA00003WAB0(N455@)
. P08 - Change C161, C164 to SE071330J80(33P 50V J NPO 0402)
. P08 - Change C388 to SE071100J80(10P 50V J NPO 0402)
. P22 - Change C473 to SE107475K80(4.7U 6.3V K X5R 0603)

<2010/06/01>
. P13 - Add NET: EC_CLK
. P17 - Add R1459, R1460 for Reserve EC_CLK
. P17 - Change U6.36 NET to PWR_LED1#
. P18 - Change NET from PWR_LED# to PWR_LED1#

<2010/06/07>
. P06 - Change C239 footprint to 0805 size
. P17 - Del JP23
. P26 - Change R1325 to 100k-ohm

<2010/06/25>
. P04 - Change C311 BOM configure to un-mount
. P09 - Change C1109, C1111, C1112, C1156 BOM configure to 3G@
. P15 - Change C1163~C1166, C504~C508, C850 BOM configure to MCP@
. P17 - Change C528, C530, C531 BOM configure to un-mount
. P10 - Change D17, D18 BOM configure to un-mount
. P22 - Change D22 BOM configure to un-mount
. P23 - Change D44, D45 BOM configure to un-mount

<2010/06/28>
. P04 - Change C239 BOM structure to 3G@
. P17 - Change C528, C530, C531 BOM structure to 3G@

Title	<Title>	
Size Custom	Document Number LA-6421P	Rev 0.1
Date: Monday, June 28, 2010	Sheet 39 of 39	