Service Schematics

IMPORTANT

This document is intended for use by authorized Nokia service centers only. Please use the document together with other documents such as the Service Manual and Service Bulletins.

Version information

While every effort has been made to ensure that the document is accurate, some errors may exist. Please always check for the latest published version for this document.

If you find any errors in the document please send email to: TrainingAndVendorDevelopment@nokia.com

Version history

1.0 First approved version.

Copyright © Nokia
This material,including documentation and any related computer programs is protected by copyright, controlled by Nokia. All rights are reserved. Copying, including reproducing, modifying, storing, adapting or translating any or all of this material requires the prior written consent of Nokia. This material also contains company confidential information, which may not be disclosed to others without the prior written consent of Nokia.

NOKIA 5232

NOKIA 5233

RM-625

Table of Contents

Front page	1
RAPIDO, Memory, USB, MMC, Sensors, Keyboard backlighting	2
Betty, Avilmas, Audio, AV Connector, Video, SIM	3
Camera	4
Display, User Interface	5
BTHFM	6
RF Part	7
Component Finder Top	8
Component Finder Bottom	9

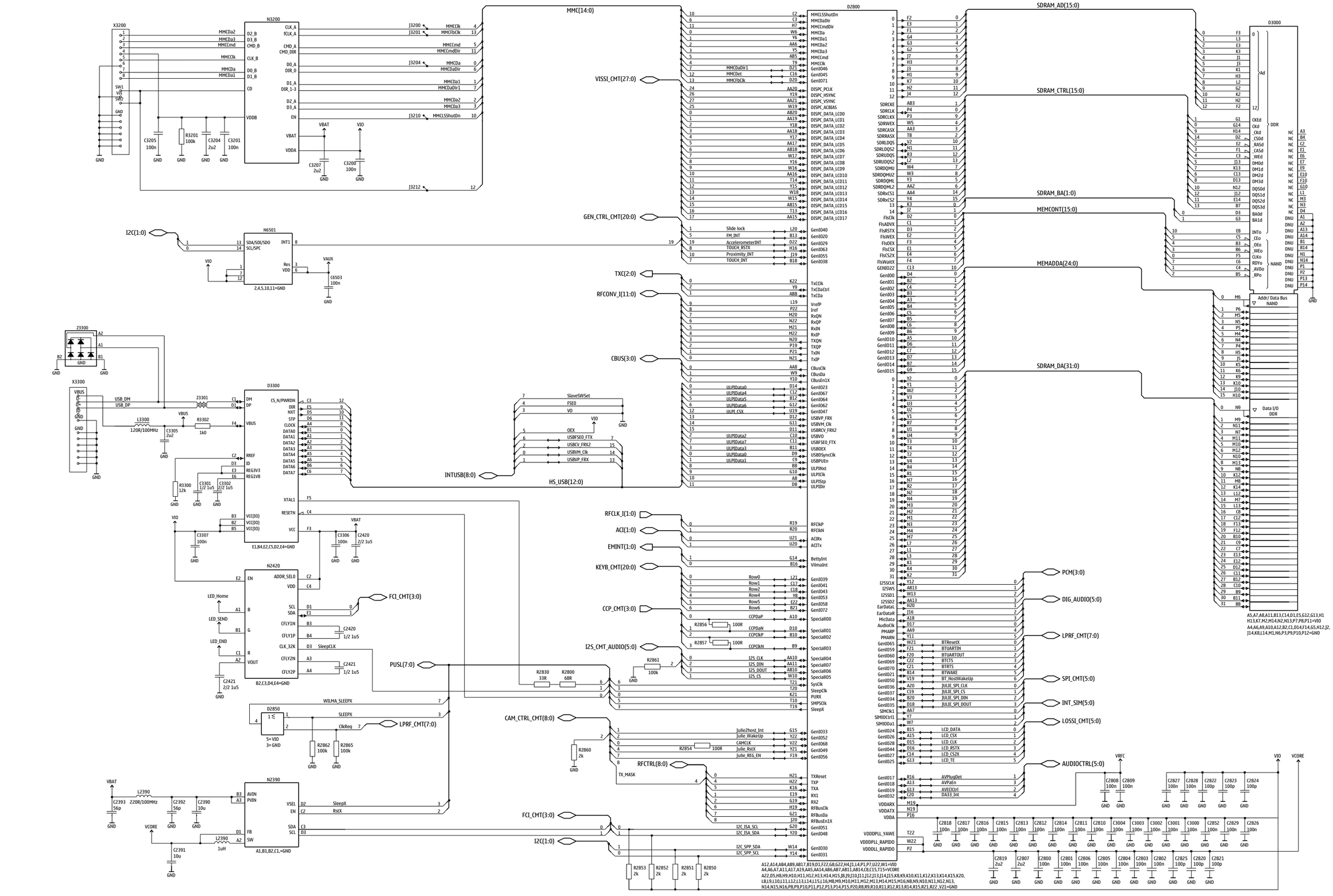
X3200
N3200
MMC(14:0)
D2800
SDRAM_AD(15:0)
D3000
VISSI_CMT(27:0)
SDRAM_CTRL(15:0)
SDRAM_BA(1:0)
MEMCONT(15:0)
GEN_CTRL_CMT(20:0)
I2C(1:0)
N6501
TXC(2:0)
RFCONV_I(11:0)
MEMADDA(24:0)
Z3300
CBUS(3:0)
SDRAM_DA(31:0)
X3300
D3300
INTUSB(8:0)
HS_USB(12:0)
RFCLK_I(1:0)
ACI(1:0)
EMINT(1:0)
KEYB_CMT(20:0)
CCP_CMT(3:0)
PCM(3:0)
DIG_AUDIO(5:0)
LPRF_CMT(7:0)
SPI_CMT(5:0)
INT_SIM(5:0)
LOSSI_CMT(5:0)
AUDIOCTRL(5:0)
N2420
FCI_CMT(3:0)
I2S_CMT_AUDIO(5:0)
PUSL(7:0)
D2850
CAM_CTRL_CMT(8:0)
RFCTRL(8:0)
N2390

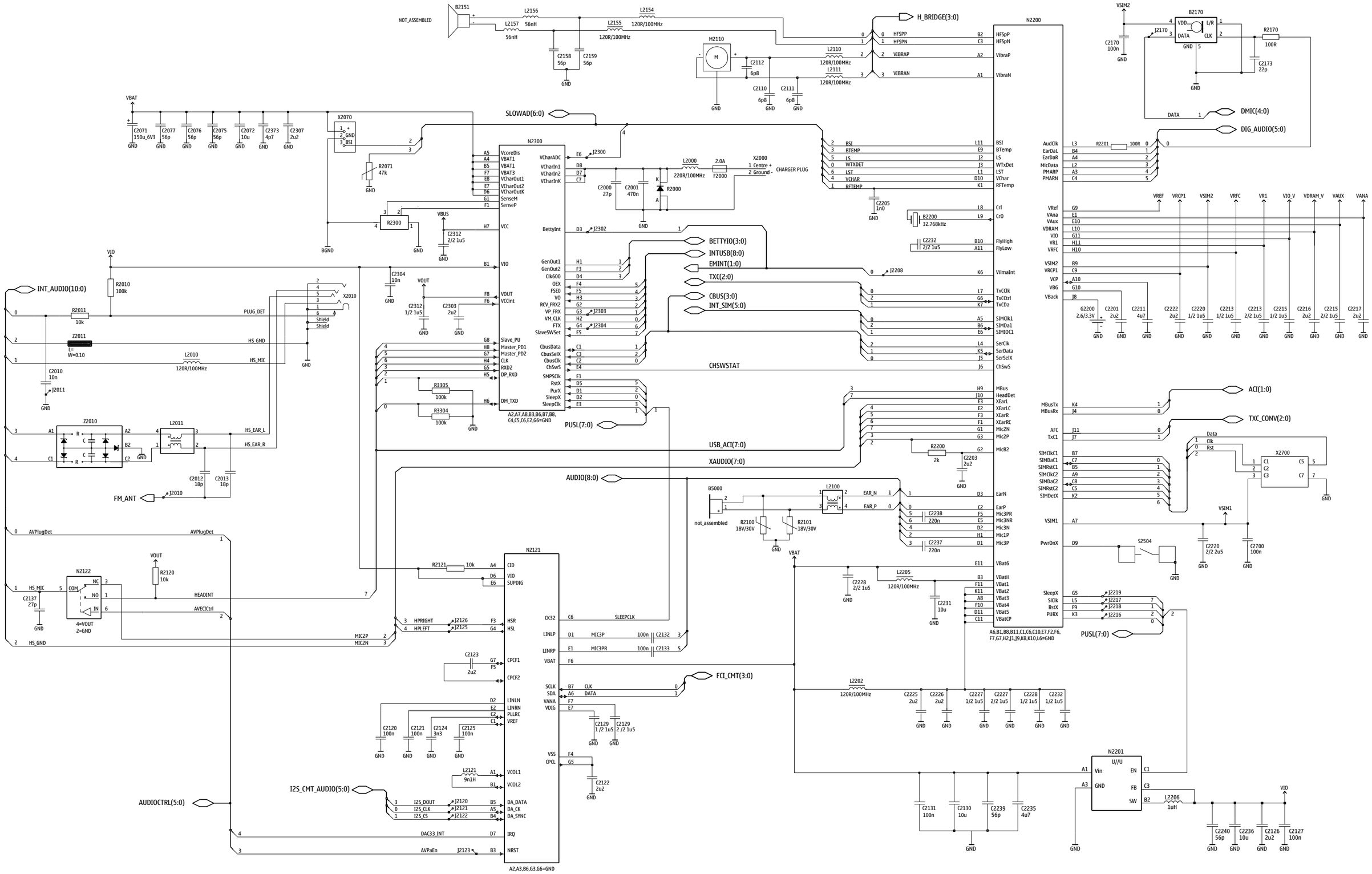

Confidential Copyright © 2009 NOKIA Only for training and service purposes

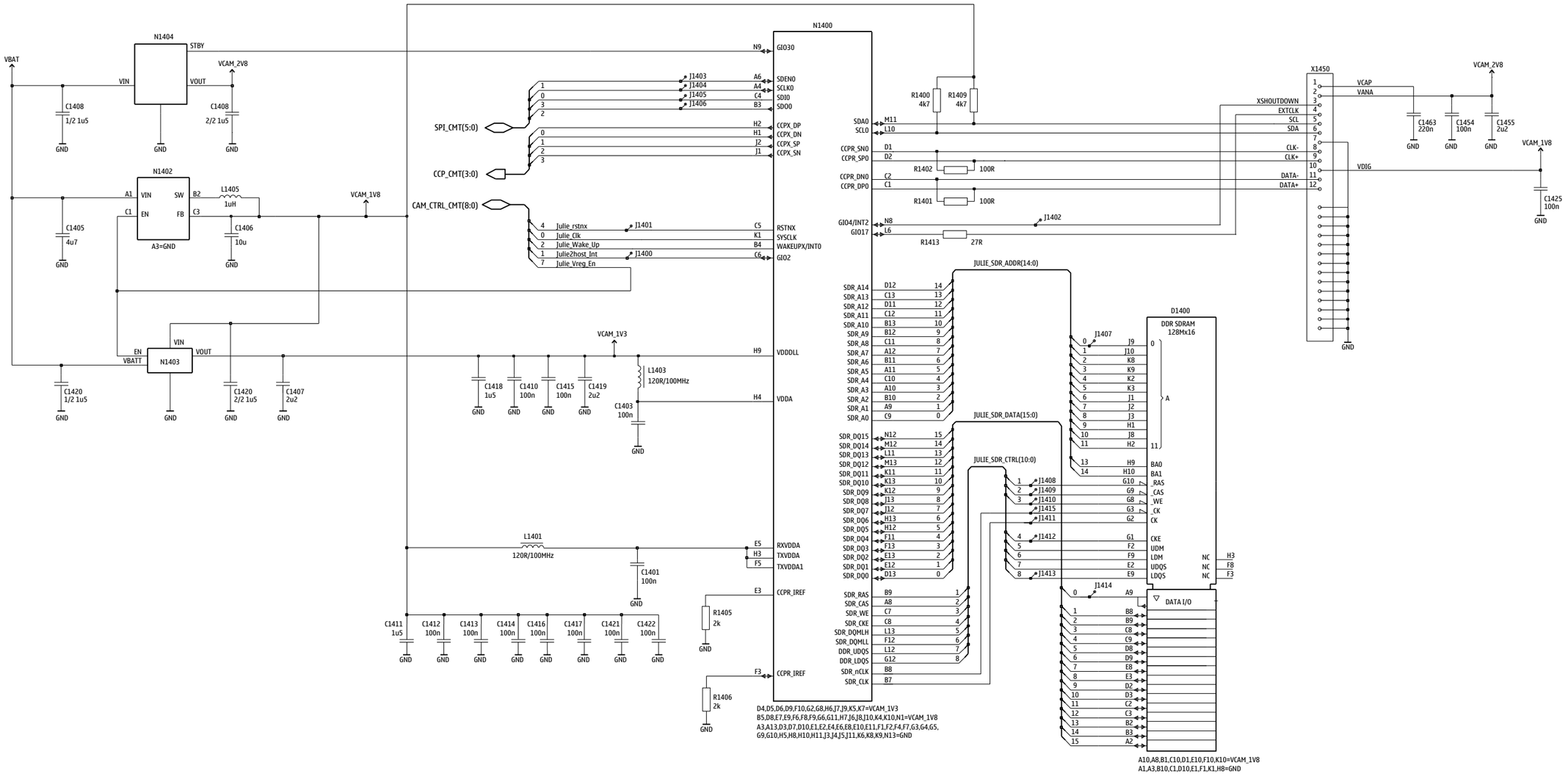

Confidential Copyright © 2009 NOKIA Only for training and service purposes

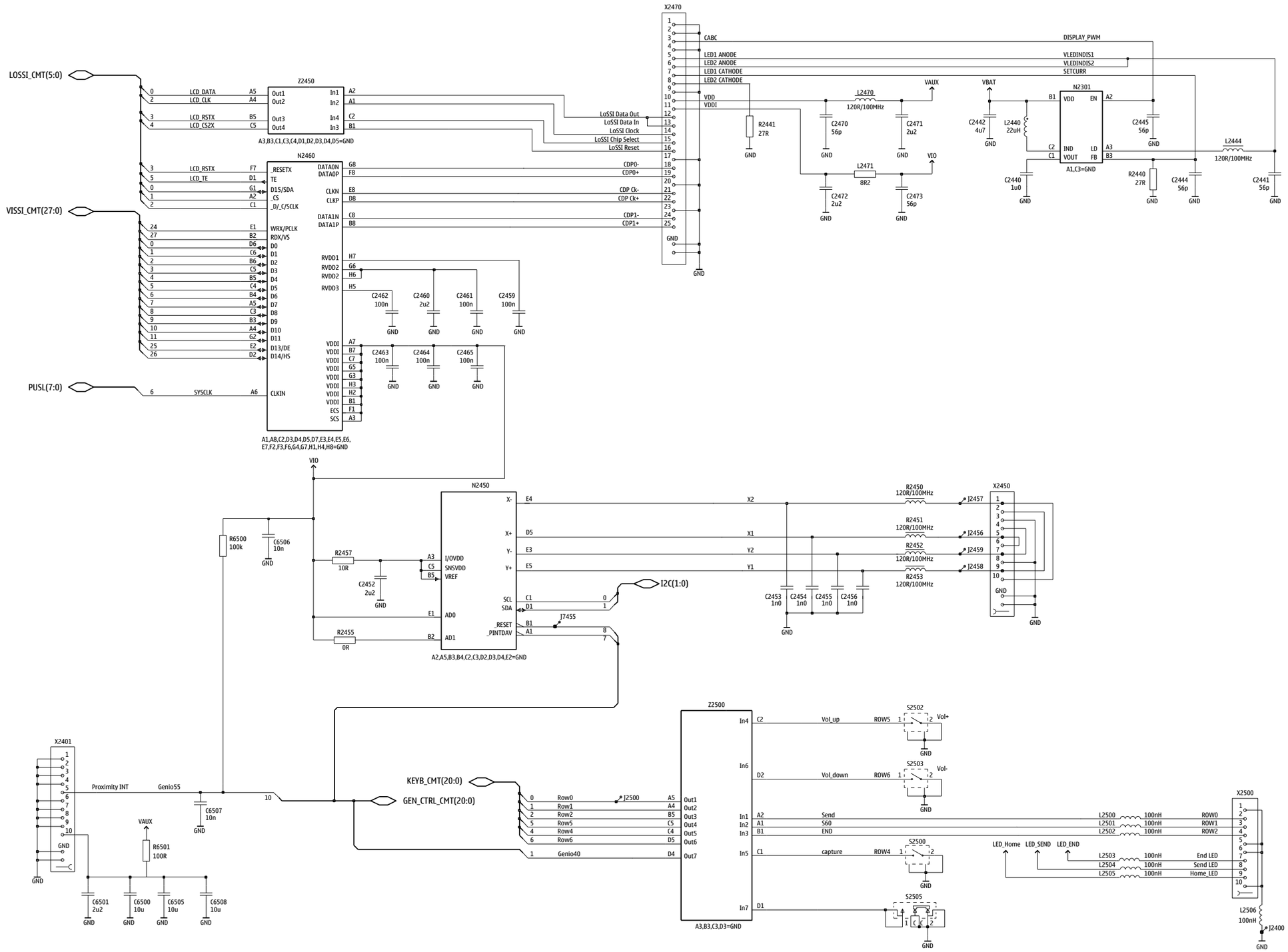
LOSSI_CMT(5:0)
VISSI_CMT(27:0)
PUSL(7:0)
Z2450
Out1
Out2
Out3
Out4
In1
In2
In4
In3
A3,B3,C1,C3,C4,D1,D2,D3,D4,D5=GND
N2460
_RESETX
TE
D15/SDA
_CS
_D/_C/SCLK
WRX/PCLK
RDX/VS
D0
D1
D2
D3
D4
D5
D6
D7
D8
D9
D10
D11
D13/DE
D14/HS
CLKIN
DATA0N
DATA0P
CLKN
CLKP
DATA1N
DATA1P
RVDD1
RVDD2
RVDD3
VDDI
ECS
SCS
A1,A8,C2,D3,D4,D5,D7,E3,E4,E5,E6,
E7,F2,F3,F6,G4,G7,H1,H4,H8=GND
LCD_DATA
LCD_CLK
LCD_RSTX
LCD_CS2X
LCD_TE
SYSCLK
X2470
CABC
LED1 ANODE
LED2 ANODE
LED1 CATHODE
LED2 CATHODE
VDD
VDDI
LoSSI Data Out
LoSSI Data In
LoSSI Clock
LoSSI Chip Select
LoSSI Reset
CDP0-
CDP0+
CDP Ck-
CDP Ck+
CDP1-
CDP1+
DISPLAY_PWM
VLEDINDIS1
VLEDINDIS2
SETCURR
VAUX
VBAT
VIO
N2301
IND
VOUT
LD
FB
EN
A1,C3=GND
L2470
120R/100MHz
L2471
8R2
L2444
120R/100MHz
R2441
27R
C2470
56p
C2471
2u2
C2472
2u2
C2473
56p
C2442
4u7
L2440
22uH
C2440
1u0
C2445
56p
R2440
27R
C2444
56p
C2441
56p
C2462
100n
C2460
2u2
C2461
100n
C2459
100n
C2463
100n
C2464
100n
C2465
100n
GND
N2450
X-
X+
Y-
Y+
I/OVDD
SNSVDD
VREF
AD0
AD1
SCL
SDA
_RESET
_PINTDAV
A2,A5,B3,B4,C2,C3,D2,D3,D4,E2=GND
R6500
100k
C6506
10n
R2457
10R
C2452
2u2
R2455
0R
J7455
I2C(1:0)
X2
X1
Y2
Y1
R2450
120R/100MHz
R2451
120R/100MHz
R2452
120R/100MHz
R2453
120R/100MHz
J2457
J2456
J2459
J2458
X2450
C2453
1n0
C2454
1n0
C2455
1n0
C2456
1n0
X2401
Proximity INT
Genio55
C6507
10n
VAUX
R6501
100R
C6501
2u2
C6500
10u
C6505
10u
C6508
10u
KEYB_CMT(20:0)
GEN_CTRL_CMT(20:0)
Z2500
Out1
Out2
Out3
Out4
Out5
Out6
Out7
In4
In6
In1
In2
In3
In5
In7
Row0
Row1
Row2
Row5
Row4
Row6
Genio40
J2500
Vol_up
Vol_down
Send
S60
END
capture
ROW5
ROW6
ROW4
S2502
S2503
S2500
S2505
Vol+
Vol-
A3,B3,C3,D3=GND
L2500
L2501
L2502
L2503
L2504
L2505
100nH
ROW0
ROW1
ROW2
End LED
Send LED
Home_LED
LED_Home
LED_SEND
LED_END
X2500
L2506
100nH
J2400

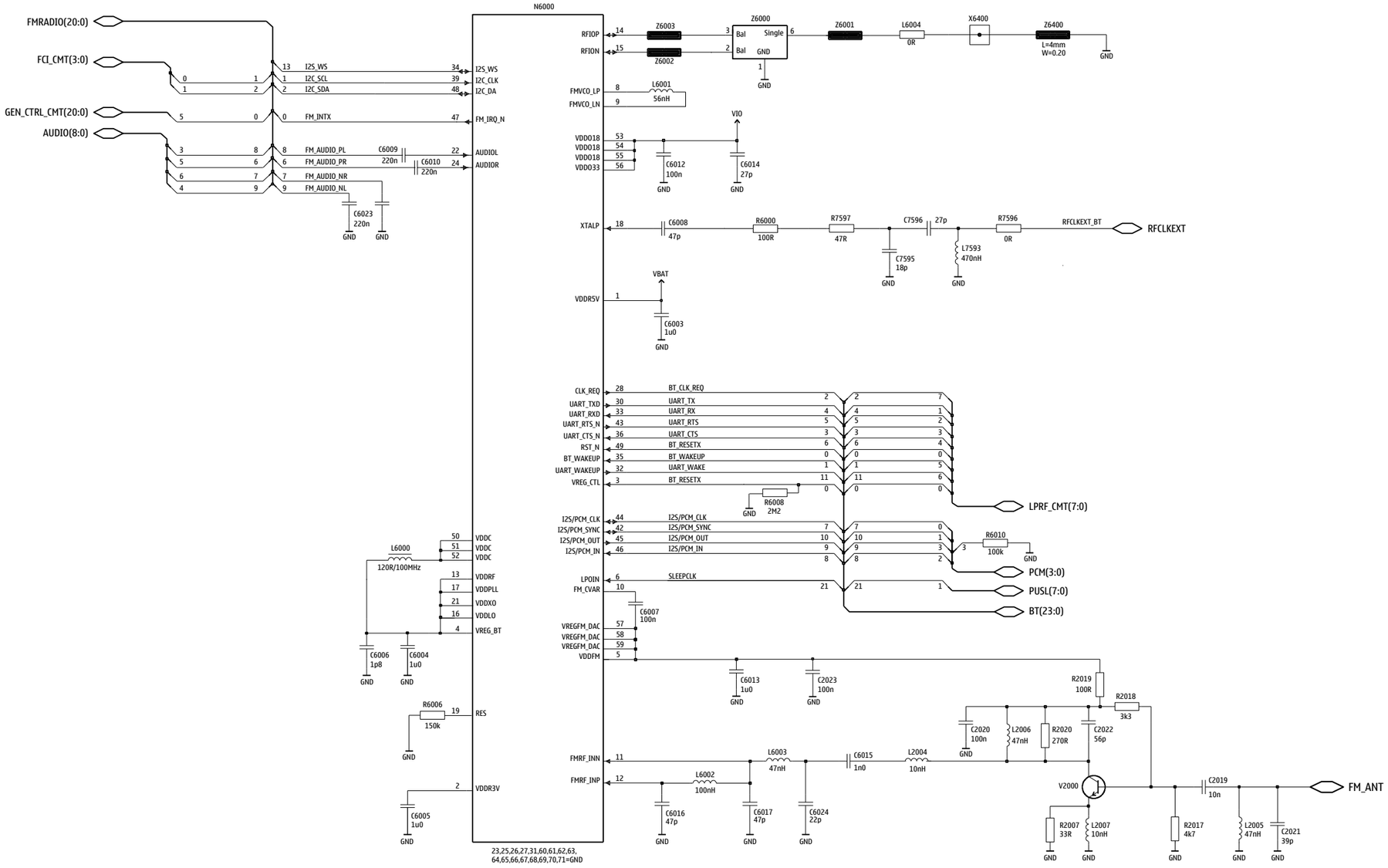

Confidential Copyright © 2009 NOKIA Only for training and service purposes

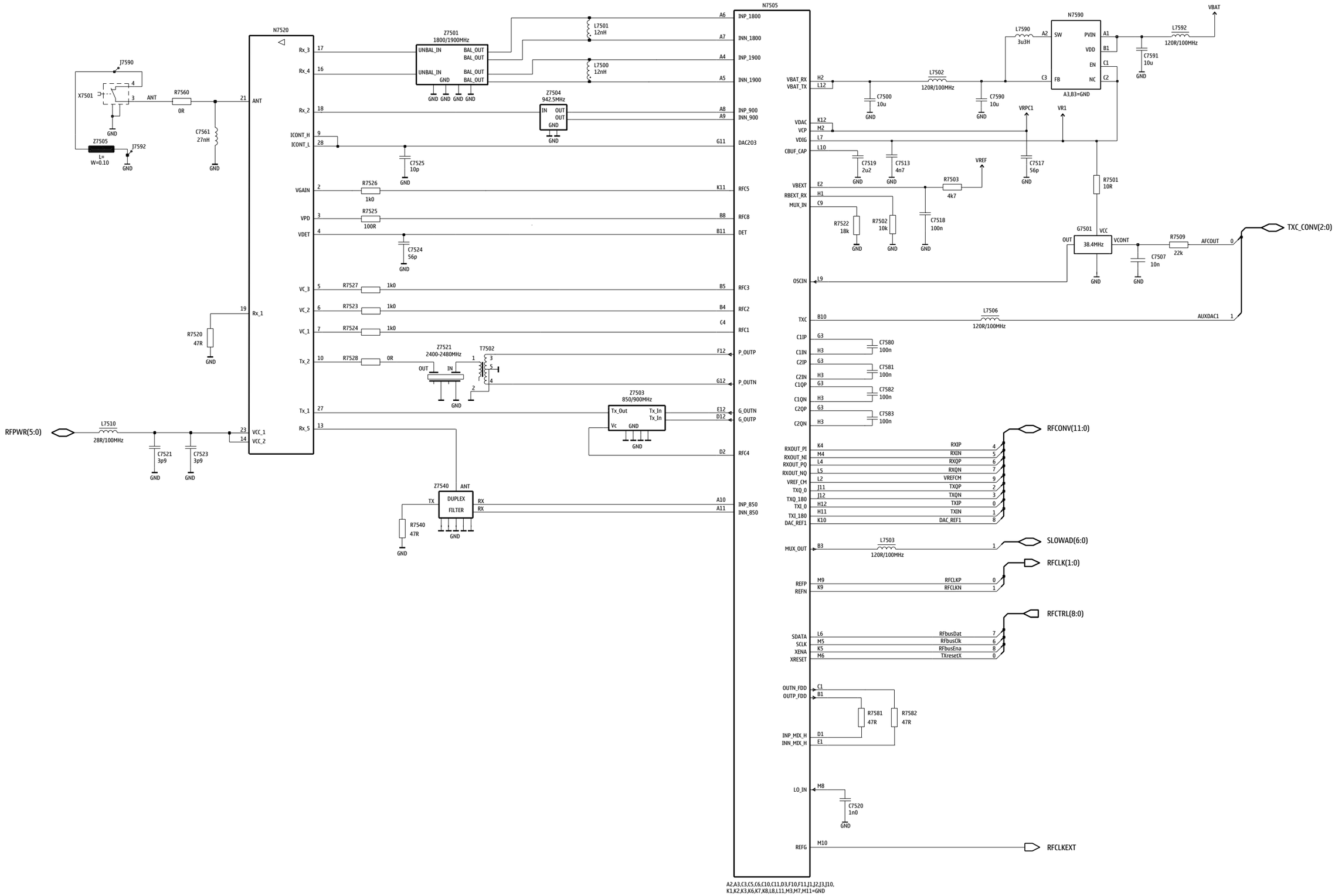

Confidential Copyright © 2009 NOKIA Only for training and service purposes

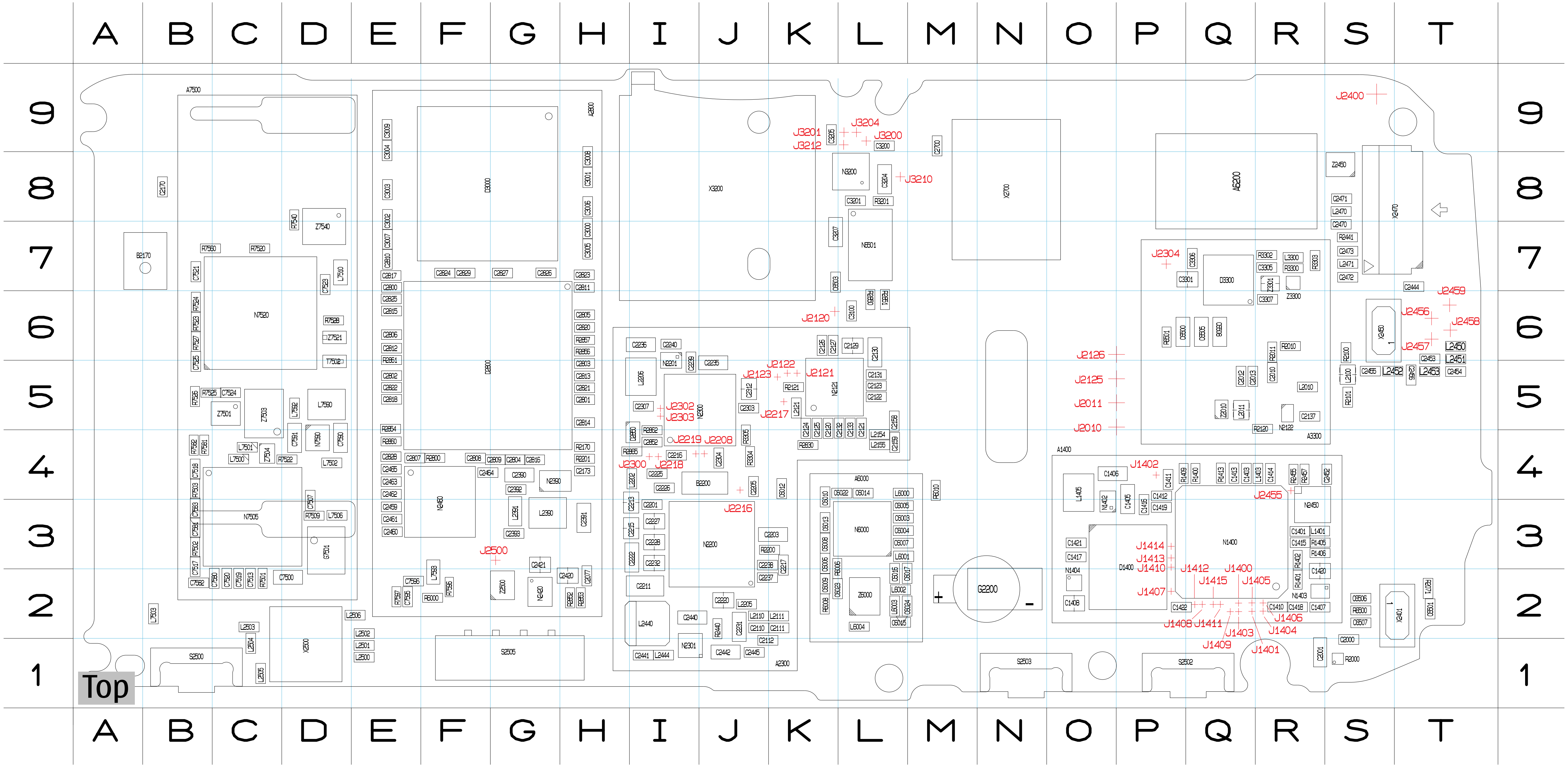

A		C1403	Q4	C1418	R2	C2112	J1	C2133	L5	C2217	K3	C2239	I5	C2441	I1	C2463	E4	C2805	H6	C2818	E5	C3001	H8	C3205	K9	C6010	K4	C6505	Q6	C7524	C5	D2850	I4	L2110	J2	L2451	T6	L6000	L4	L7593	F2	N2420	G2	R1405	R3	R2200	K3	R2856	H6	R6006	K3	R7525	B5	S2503	N1	Z2450	S8
A1400	Q3	C1405	P4	C1419	P3	C2120	K5	C2137	R5	C2220	J2	C2240	I6	C2442	J1	C2464	F4	C2806	E6	C2820	H6	C3002	E8	C3207	K7	C6012	K4	C6506	S2	C7525	B5	D3000	F8	L2111	K2	L2452	S5	L6001	L3	**N**		N2450	R3	R1406	R3	R2201	H4	R2857	H6	R6008	K2	R7526	B5	S2505	G1	Z2500	G2
A2300	J4	C1406	04	C1420	R2	C2121	L5	C2158	L5	C2222	I3	C2303	J5	C2444	T7	C2465	E4	C2807	E4	C2821	H5	C3003	E8	C3301	Q7	C6013	K3	C6507	S2	C7580	C2	D3300	Q7	L2121	K5	L2453	T5	L6002	L2	N1400	Q3	N2460	F3	R1409	P4	R2440	J2	R2860	E4	R6010	M4	R7527	B6	**T**		Z3300	R7
A2800	F6	C1407	R2	C1421	03	C2122	L5	C2159	L4	C2225	I4	C2304	J4	C2445	J1	C2470	S7	C2808	F4	C2822	E5	C3004	E9	C3305	R7	C6014	L4	C6508	Q6	C7581	B3	**G**		L2154	L4	L2470	S8	L6003	L2	N1402	03	N3200	L8	R1413	Q4	R2441	S7	R2861	E6	R6500	S2	R7528	D6	T7502	D5	Z3301	R7
A3300	Q6	C1408	02	C1422	P2	C2123	L5	C2170	B8	C2226	I4	C2307	I5	C2452	S4	C2471	S8	C2809	G4	C2823	H7	C3005	H7	C3306	Q7	C6015	L2	C7500	D2	C7582	B2	G2200	N2	L2155	L4	L2471	S7	L6004	L2	N1403	R2	N6000	L3	R2000	S1	R2455	R4	R2862	I4	R6501	P6	R7540	D8	**X**		Z6000	L2
A6000	L3	C1410	R2	C2000	S1	C2124	K5	C2173	H4	C2227	I3	C2312	J5	C2453	T6	C2472	S7	C2810	E7	C2824	F7	C3006	H8	C3307	R6	C6016	L2	C7507	D3	C7583	B3	G7501	D3	L2202	I4	L2500	E1	L7500	C4	N1404	02	N6501	L7	R2010	R6	R2457	R4	R2865	I4	R7501	C2	R7560	B7	X2401	T2	Z7501	C5
A6200	Q8	C1411	P4	C2001	R1	C2125	K5	C2201	I3	C2228	I3	C2390	G4	C2454	T5	C2473	S7	C2811	H7	C2825	E6	C3007	E7	C6003	L3	C6017	L2	C7513	C2	C7590	D4	**L**		L2205	J2	L2501	E1	L7501	C4	N2121	K5	N7505	C3	R2011	R6	R2800	F4	R3201	L8	R7502	B3	R7581	B4	X2450	S6	Z7503	C5
A7500	C6	C1412	P4	C2010	R5	C2126	K6	C2203	K3	C2231	J2	C2391	H3	C2455	S5	C2700	M9	C2812	E6	C2826	G7	C3008	H8	C6004	L3	C6022	L4	C7517	B3	C7591	D4	L1401	R3	L2206	I5	L2502	E2	L7502	D4	N2122	R5	N7520	C6	R2071	T2	R2830	K4	R3300	R7	R7503	B4	R7582	B4	X2470	T8	Z7504	C4
B		C1413	Q4	C2012	Q5	C2127	K6	C2205	J4	C2232	I3	C2392	G4	C2456	T5	C2800	E7	C2813	H5	C2827	G7	C3009	E9	C6005	L3	C6023	K2	C7518	B4	C7595	E2	L1403	R4	L2390	G3	L2503	C2	L7503	B2	N2200	J3	N7590	D4	R2100	S6	R2850	L6	R3302	R7	R7509	D3	R7596	F2	X2500	D1	Z7521	D6
B2170	B7	C1414	R4	C2013	Q5	C2129	L6	C2211	I2	C2235	J5	C2393	G3	C2459	E3	C2801	H5	C2814	H5	C2828	E4	C3100	L6	C6006	K3	C6024	L2	C7519	C2	C7596	E2	L1405	04	L2391	G3	L2504	C1	L7506	D3	N2201	I5	**R**		R2101	S5	R2851	L6	R3303	R7	R7520	C7	R7597	E2	X2700	N8	Z7540	D7
B2200	J4	C1415	R3	C2077	H2	C2130	L6	C2213	I3	C2236	I6	C2420	H2	C2460	E3	C2802	E5	C2815	E6	C2829	F7	C3200	L9	C6007	L3	C6500	P6	C7520	C2	**D**		L2010	R5	L2440	I2	L2505	C1	L7510	D7	N2300	J5	R1400	Q4	R2120	R5	R2852	H2	R3304	J4	R7522	D4	**S**		X3200	J8		
C		C1416	P3	C2110	J2	C2131	L5	C2215	I3	C2237	J2	C2421	G3	C2461	E3	C2803	H5	C2816	G4	C2852	I4	C3201	L8	C6008	K3	C6501	T2	C7521	B7	D1400	P3	L2011	Q5	L2444	I1	L2506	E2	L7590	D5	N2301	I1	R1401	R2	R2121	K5	R2853	H2	R3305	J4	R7523	B6	S2500	B1	**Z**			
C1401	R3	C1417	03	C2111	K2	C2132	L5	C2216	I4	C2238	J3	C2440	I2	C2462	E4	C2804	G4	C2817	E7	C3000	H7	C3204	L8	C6009	K2	C6503	K7	C7523	D7	D2800	F5	L2100	S5	L2450	T6	L3300	R7	L7592	D5	N2390	G4	R1402	R3	R2170	H4	R2854	E5	R6000	F2	R7524	B6	S2502	Q1	Z2010	Q5		

Confidential Copyright © 2009 NOKIA Only for training and service purposes

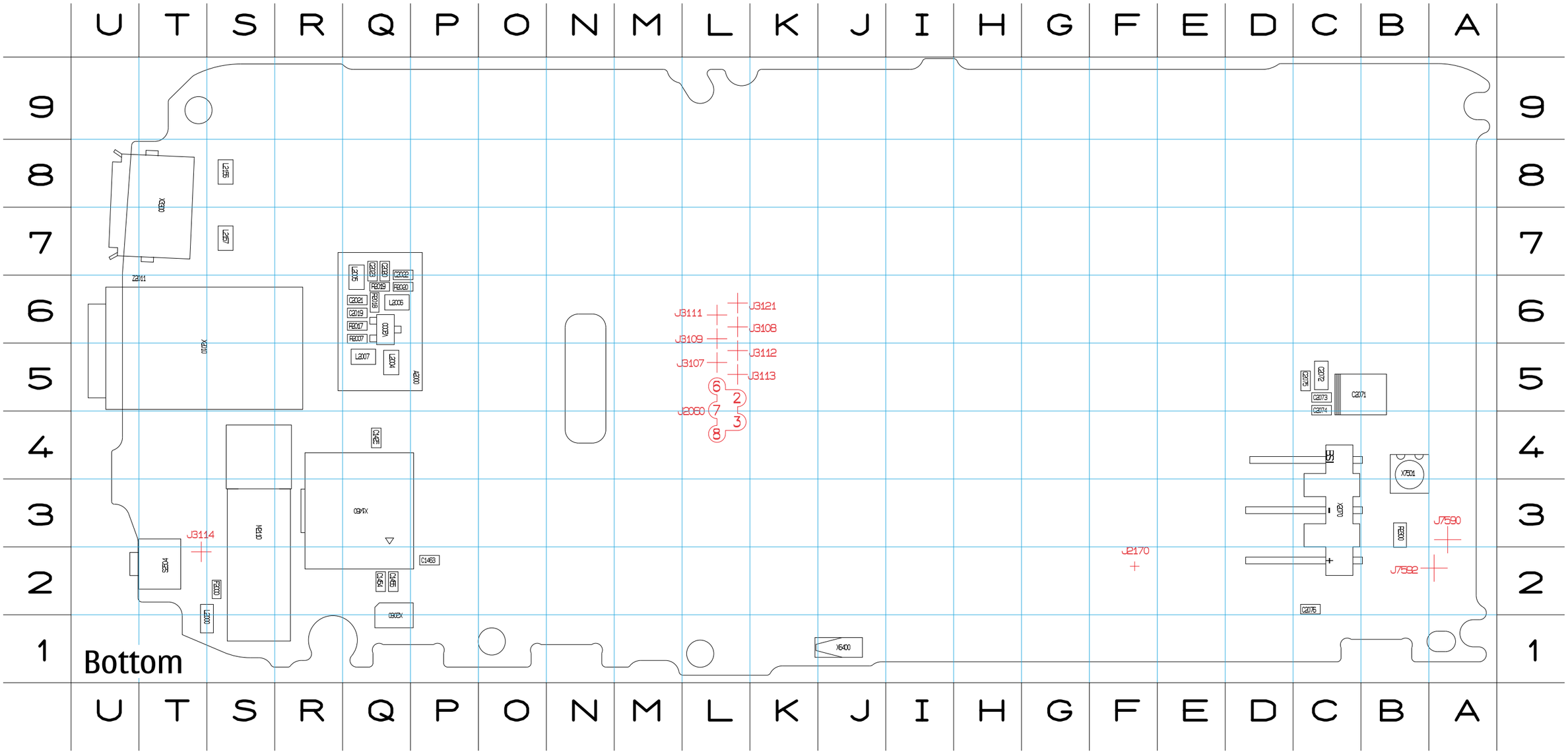

A		C2021	Q6	**F**		L2157	S7	R2300	B3	X2070	C3
A2000	Q6	C2022	Q7	F2000	S2	**M**		**S**		X3300	T8
C		C2023	Q7	**L**		M2110	S2	S2504	T2	X6400	J1
C1425	Q4	C2071	C5	L2000	S1	**R**		**V**		X7501	B4
C1454	Q2	C2072	C5	L2004	Q5	R2007	Q6	V2000	Q6		
C1455	Q2	C2073	C5	L2005	Q6	R2017	Q6	**X**			
C1463	P2	C2074	C5	L2006	Q6	R2018	Q6	X1450	Q3		
C2019	Q6	C2075	C5	L2007	Q5	R2019	Q6	X2010	T5		
C2020	Q7	C2076	C2	L2156	S8	R2020	Q6	X2060	Q1		

Confidential Copyright © 2009 NOKIA Only for training and service purposes