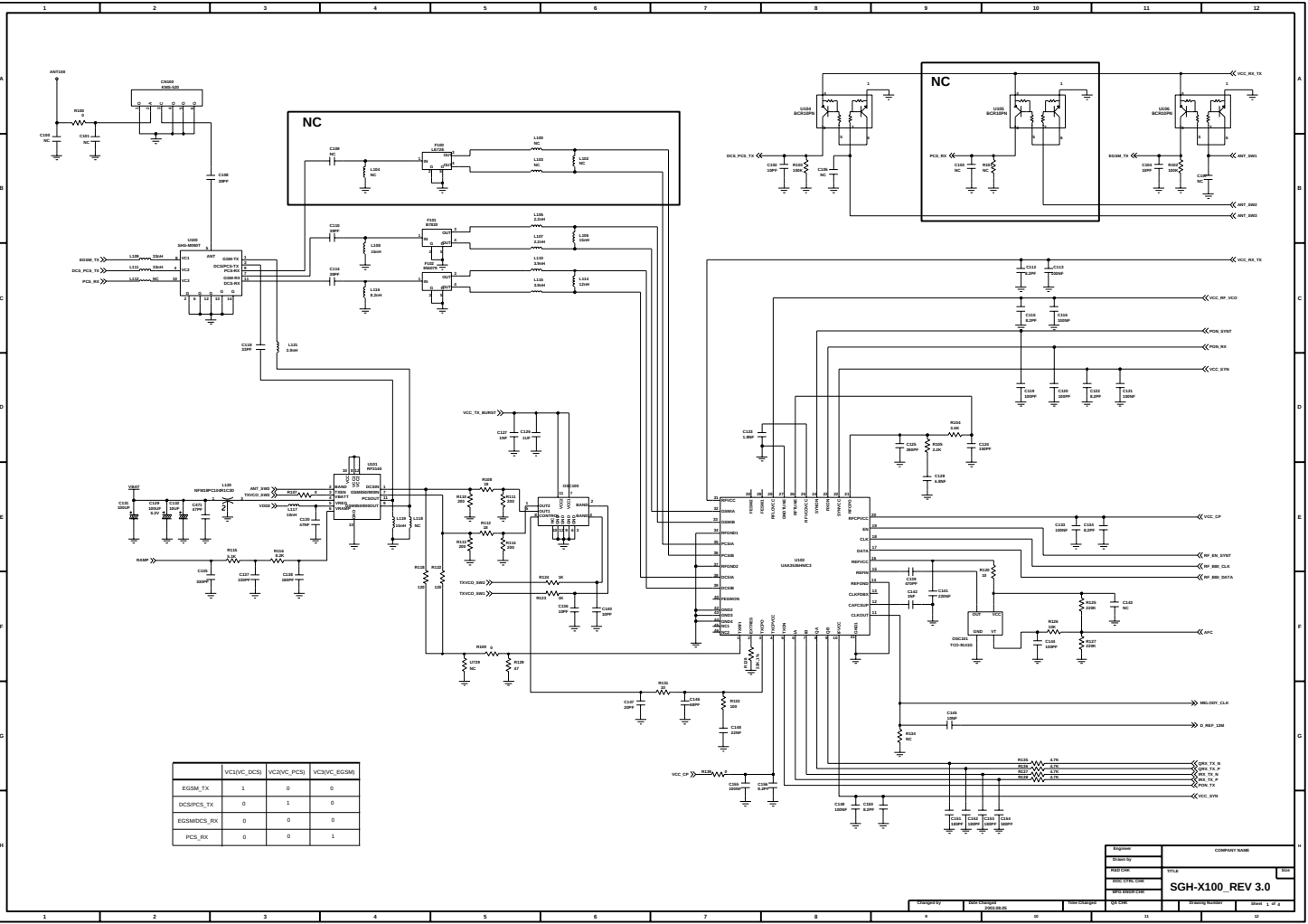

	VC1(VC_DCS)	VC2(VC_PCS)	VC3(VC_EGSM)
EGSM_TX	1	0	0
DCS/PCS_TX	0	1	0
EGSM/DCS_RX	0	0	0
PCS_RX	0	0	1

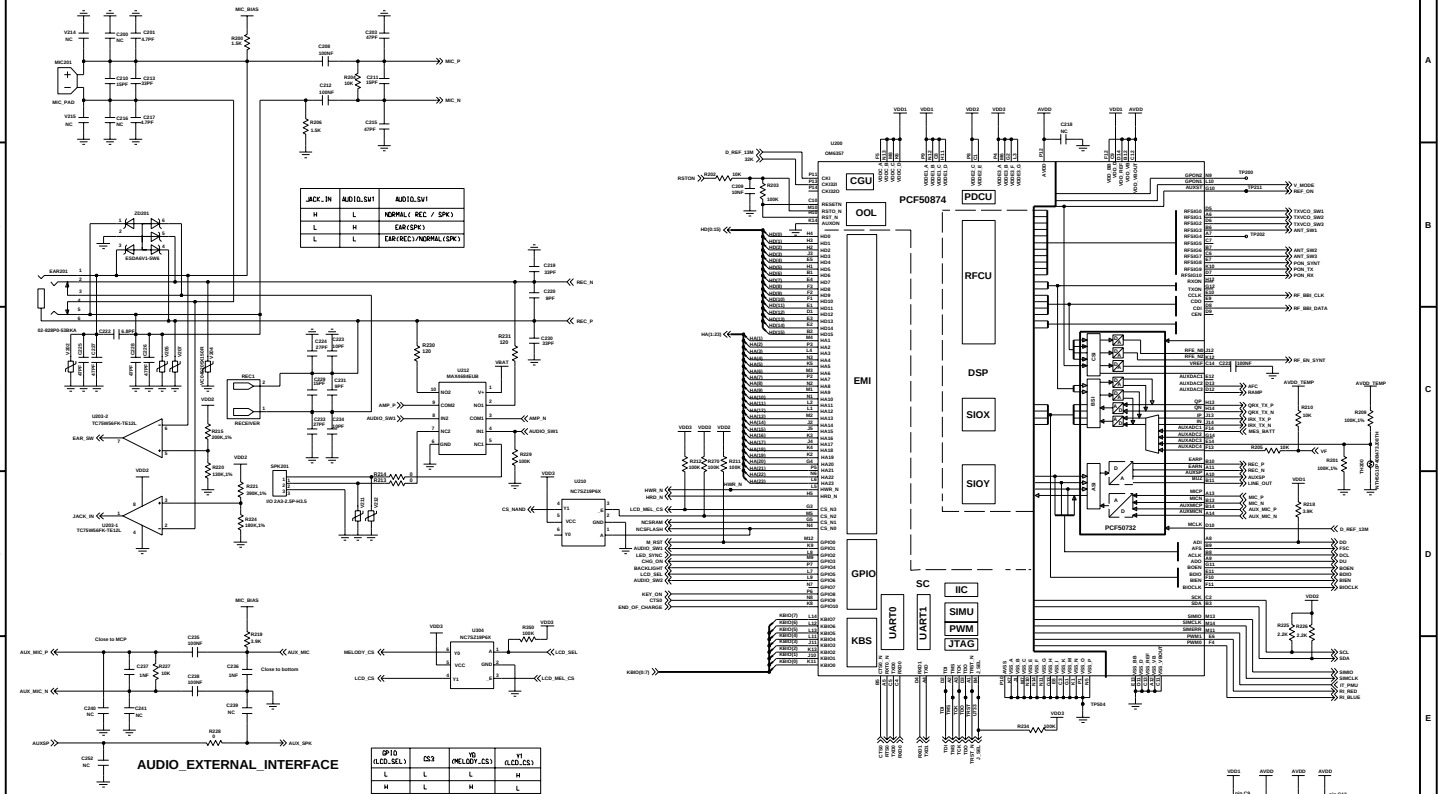
PCF50874
CGU
OOL
PDCU
RFCU
DSP
SIOX
SIOY
EMI
GPIO
KBS
UART0
UART1
SC
IIC
SIMU
PWM
JTAG
PCF50732
U200
GMA337
U201
MAX9886EUB
U202-2
TC7S66SFE-TE12L
U202-1
TC7S66SFE-TE12L
U203
NC7SZ125P6X
U204
NC7SZ125P6X
U210
NC7SZ125P6X
U212
TC7SH00FE-TE12L
MIC_BIAS
MIC_P
MIC_N
MIC201
MIC_PAD
EAR201
ASDA6V1-SWA
RECEIVER
REC_N
REC_P
AMP_P
AMP_N
AUDIO_SW1
EAR_SW
JACK_IN
SPK201
ID 2A2-2.5P-KLS
AUX_MIC_P
AUX_MIC_N
AUX_MIC
AUXSP
AUX_SPK
Close to MCP
Close to bottom
MELODY_CS
LCD_CS
LCD_SEL
LCD_MIS_CS
CS_NAND
HWR_N
HRD_N
LCD_MIS_CS
NCSRAM
NCSFLASH
R_EST
AUDIO_SW1
LED_SYNC
CHG_OK
BACKLIGHT
LCD_SW2
AUDIO_SW2
KEY_ON
CTS0
END_OF_CHARGE
KBD(7)
KBD(3)
D_REF_13M
RSTON
HD(0:15)
HA(1:23)
VDD1
VDD2
VDD3
AVDD
VDD5
TP280
TP281
TP282
TP284
V_MODE
REF_ON
TXVCO_SW1
TXVCO_SW2
TXVCO_SW3
ANT_SW1
ANT_SW2
ANT_SW3
PON_SYNT
PON_TX
PON_RX
RF_BB_CLK
RF_BB_DATA
RF_SN_SYNT
AVDD_TEMP
AFC
AAMP
QRX_TX_P
QRX_TX_N
IRX_TX_P
IRX_TX_N
MES_BATT
VF
REC_P
REC_N
AUXSP
LINE_OUT
MIC_P
MIC_N
AUX_MIC_P
AUX_MIC_N
D_REF_13M
SCL
SDA
BSBO
BSCLK
BSDO
BSEN
BSCLK
SCK
SDA
SMO
SMCLK
SMAAR
PWM1
PWM3
TP664
VDD3
R224
220K
C218
NC
C219
33PF
C220
8PF
C230
33PF
C222
6.8PF
C223
33PF
C224
33PF
C225
33PF
C226
33PF
C227
33PF
C228
33PF
C229
33PF
C231
33PF
C232
33PF
C233
33PF
R220
120
R221
120
R215
200K,1%
R220
130K,1%
R221
200K,1%
R216
180K,1%
R229
100K
R214
R213
R212
R211
R210
50K
R209
100K,1%
R208
10K
R207
100K,1%
R206
1.5K
R205
10K
R204
1.5K
R203
10K
R202
10K
R201
100K,1%
R218
1.8K
R219
1.8K
R225
2.2K
R226
2.2K
R227
1M
R228
10K
R230
1M
R231
100K
R232
100K
R233
100K
R234
100K
R235
100K
R236
NC
R237
1M
R238
10M
R239
NC
R240
NC
R241
NC
R242
NC
R243
NC
R244
NC
R245
NC
R246
NC
R247
NC
R248
NC
R249
NC
R250
100K
R251
100K
R252
NC
R253
NC
R254
NC
R255
NC
R256
1.5K
R257
NC
R258
NC
R259
1.5K
R260
10K
R261
NC
R262
NC
R263
NC
R264
NC
R265
NC
R266
NC
R267
NC
R268
NC
R269
NC
R270
NC
R271
NC
R272
NC
R273
NC
R274
NC
R275
NC
R276
NC
R277
NC
R278
NC
R279
NC
R280
NC

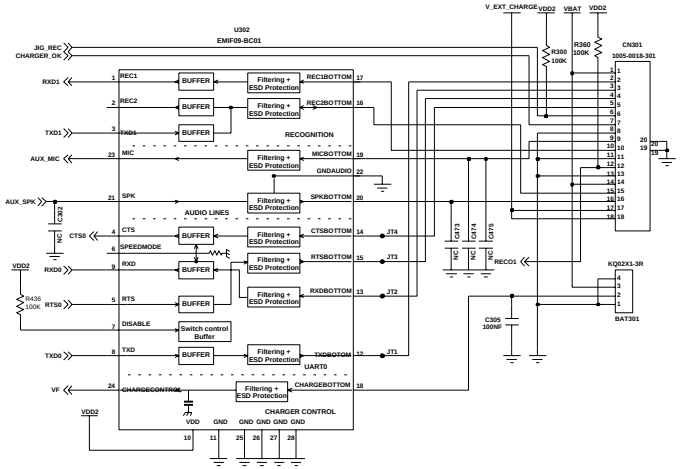

MELODY

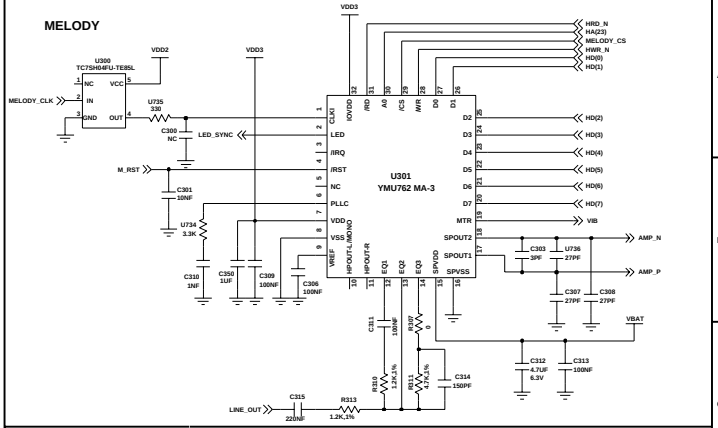

LCD BACKLIGHT

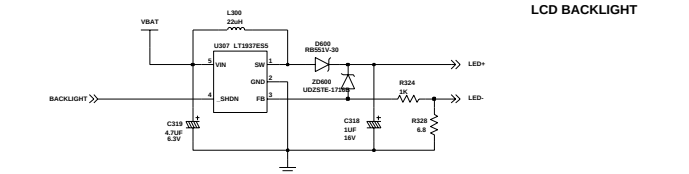

CHARGER

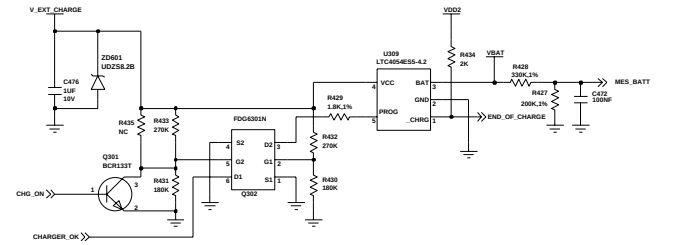

MEMORY

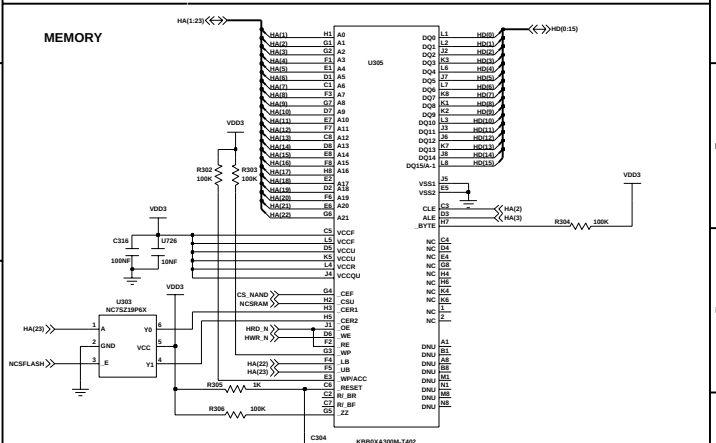

Changed by	Date Changed 2003.08.05	Time Changed	QA CHK	Engineer	COMPANY NAME
				Drawn by	
				R&D CHK	TITLE: SGH-X100_REV 3.0
				DOC CTRL CHK	Size
				MFG ENGR CHK	
				Drawing Number	Sheet 3 of 4

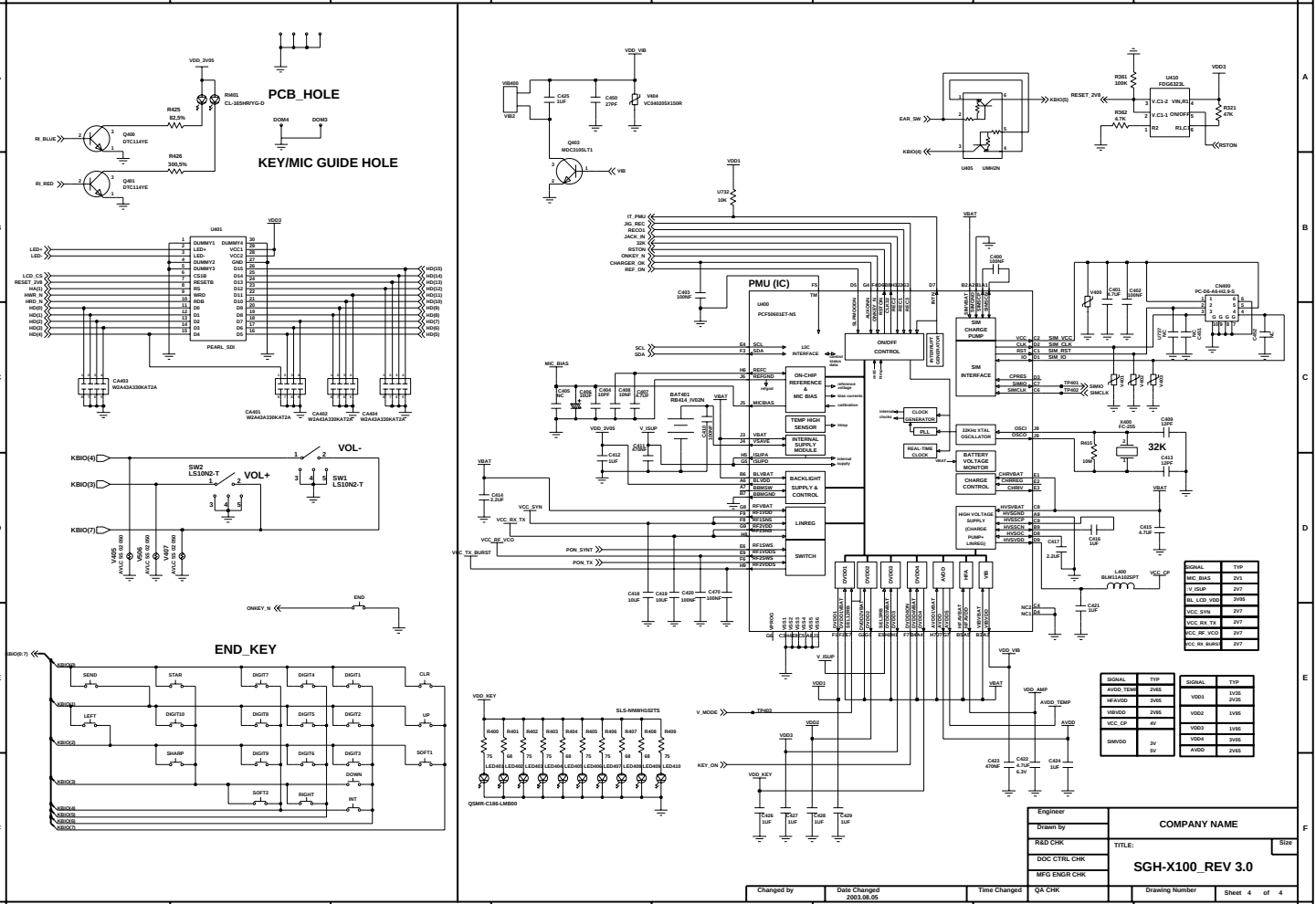
PCB_HOLE
KEY/MIC GUIDE HOLE
VOL-
VOL+
SW2
LS10N2-T
SW1
LS10N2-T
END_KEY
PMU (IC)
U400
PCF50601ET-N5
ON-CHIP REFERENCE & MIC BIAS
TEMP HIGH SENSOR
INTERNAL SUPPLY MODULE
BACKLIGHT SUPPLY & CONTROL
LINREG
SWITCH
ONOFF CONTROL
SIM CHARGE PUMP
SIM INTERFACE
CLOCK GENERATOR
PLL
REAL-TIME CLOCK
32KHz XTAL OSCILLATOR
BATTERY VOLTAGE MONITOR
CHARGE CONTROL
HIGH VOLTAGE SUPPLY (CHARGE PUMP+ LINREG)
32K
COMPANY NAME
SGH-X100_REV 3.0
Engineer
Drawn by
R&D CHK
DOC CTRL CHK
MFG ENGR CHK
Changed by
Date Changed
2003.08.05
Time Changed
QA CHK
Drawing Number
Sheet 4 of 4
Size

assy1.gbr (Board layer 2) Scale=2.64 Thu Aug 07 14:16:22 2003

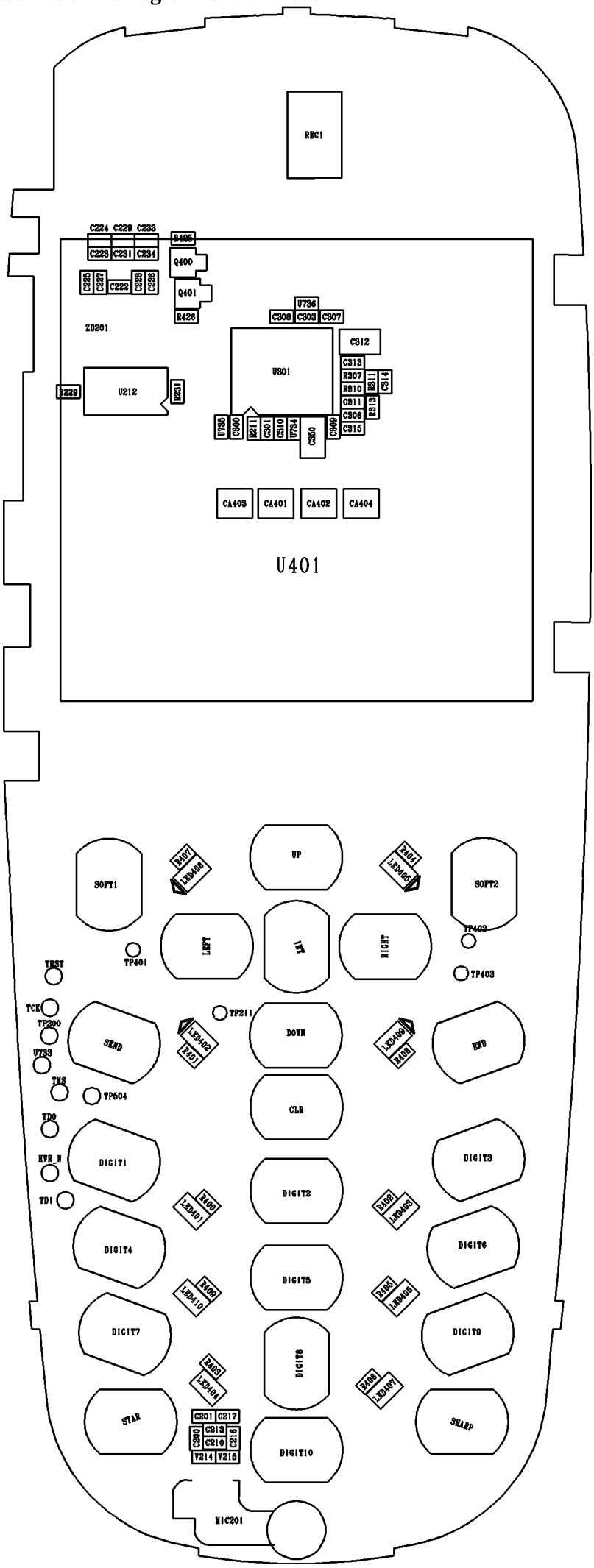
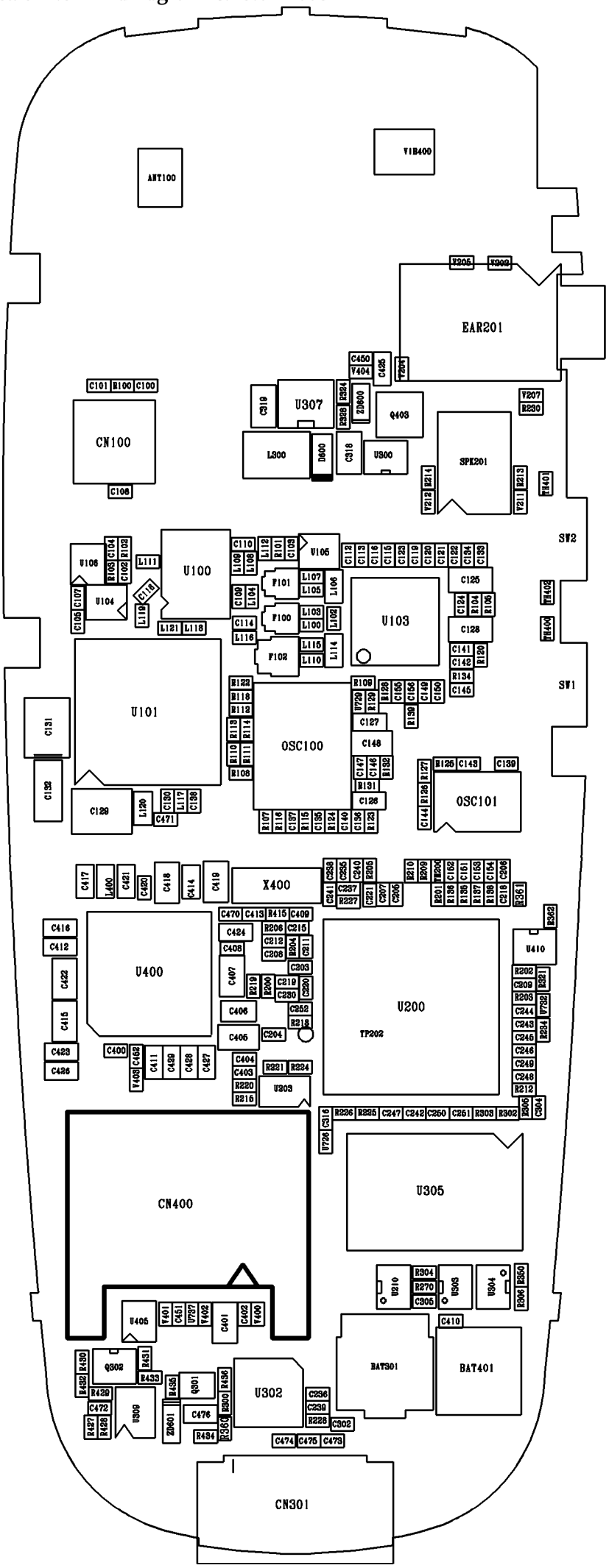
assy2.gbr (Board layer 1) Scale=2.62 Thu Aug 07 14:16:07 2003