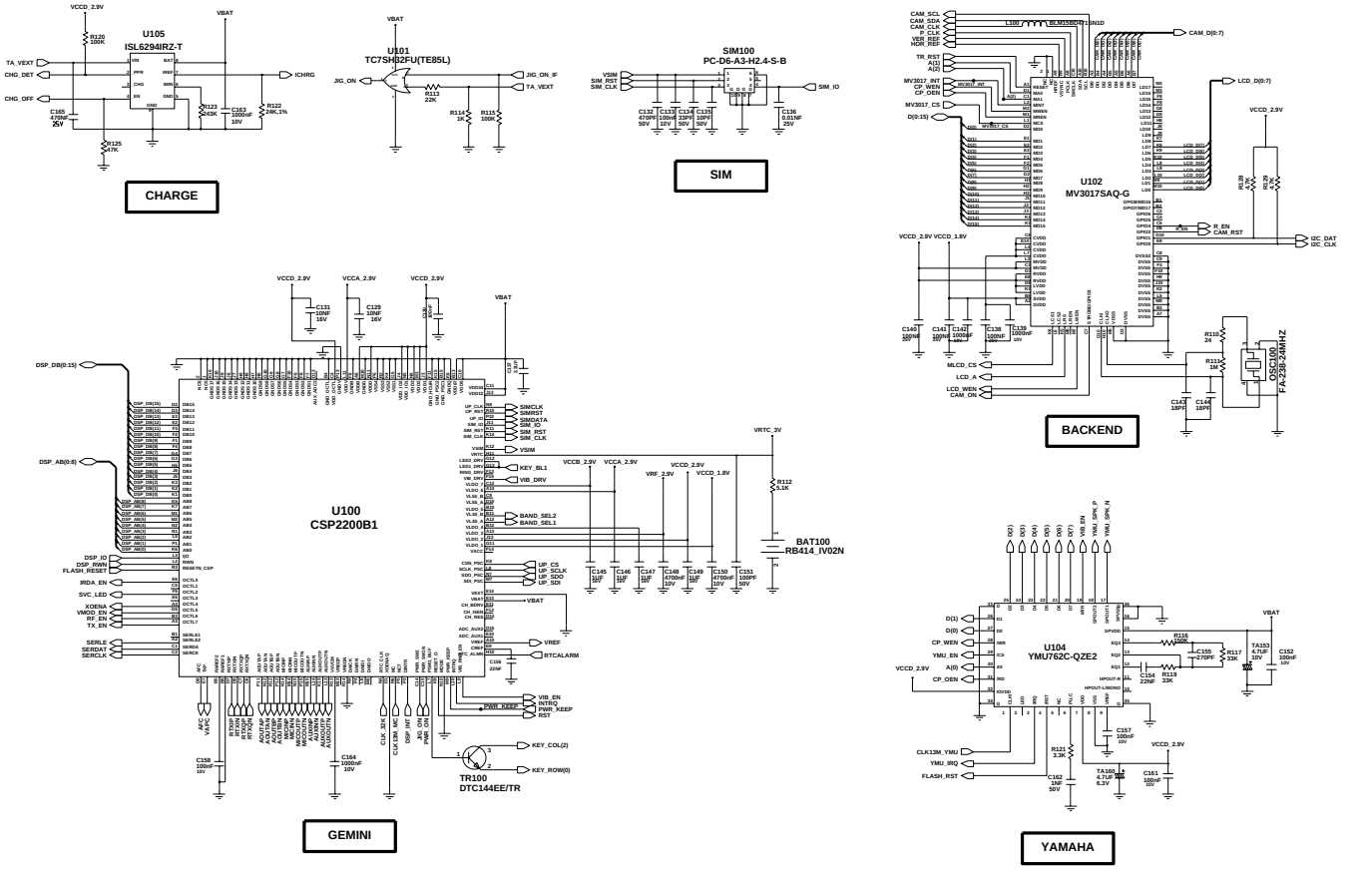

Changed by	Date Changed	Time Changed	QA CHK	REV	Drawing Number	Sheet 1 of 4					

Engineer	COMPANY NAME Address City	
Drawn by		
R&D CHK	TITLE	Size A2
DOC CTRL CHK	SGH-X520_REV1.1	
DFG ENGR CHK		

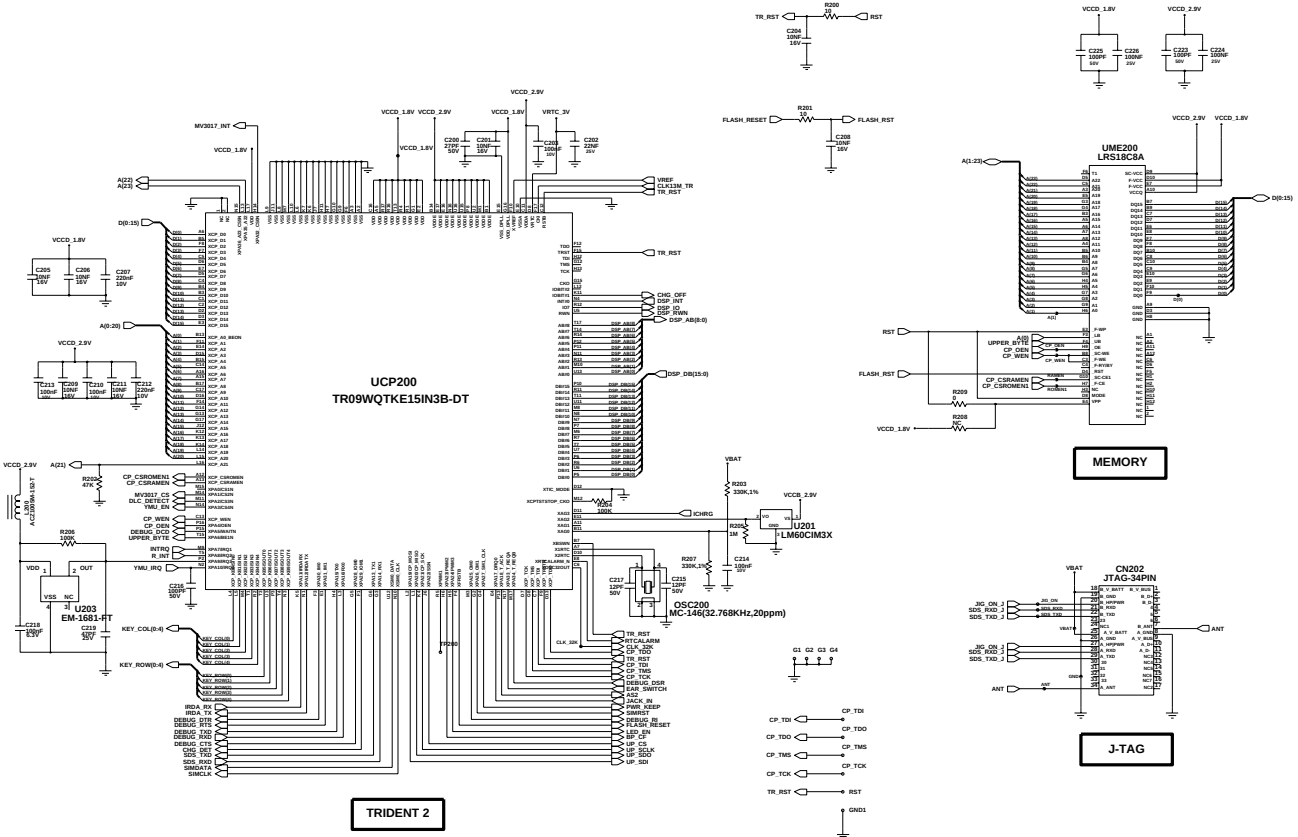
UCP200
TR09WQTKE15IN3B-DT
TRIDENT 2
UME200
LRS18C8A
MEMORY
CN202
JTAG-34PIN
J-TAG
U201
LM60CIM3X
OSC200
MC-146(32.768KHz,20ppm)
U203
EM-1681-FT
VCCD_1.8V
VCCD_2.9V
VRTC_3V
VBAT
TR_RST
FLASH_RESET
FLASH_RST
RST
A(1:23)
D(0:15)
A(0:20)
A(21)
A(22)
A(23)
MV3017_INT
CHG_OFF
DSP_INT
DSP_IO
DSP_RWN
DSP_AB(8:0)
DSP_DB(15:0)
VREF
CLK13M_TR
ICHRG
KEY_COL(0:4)
KEY_ROW(0:4)
IRDA_RX
IRDA_TX
DEBUG_DTE
DEBUG_RTS
DEBUG_TXD
DEBUG_RXD
DEBUG_CTS
SDS_TXD
SDS_RXD
SIMDATA
SIMCLK
TR_RST
RTCALARM
CLK_32K
FLASH_RESET
CP_TRST
CP_TDI
CP_TMS
CP_TCK
DEBUG_DSR
EAR_SWITCH
JACK_IN
PWR_KEEP
SIMRST
DEBUG_RI
FLASH_RESET
LED_EN
UP_CS
UP_SCLK
UP_SDO
UP_SDI
CP_TDI
CP_TDO
CP_TMS
CP_TCK
TR_RST
RST
GND1
G1 G2 G3 G4
ANT
Engineer
Drawn by
R&D CHK
DOC CTRL CHK
DFG ENGR CHK
COMPANY NAME
Address
City
TITLE
Size A2
SGH-X520_REV1.0
Changed by
Date Changed
Time Changed
QA CHK
REV
Drawing Number
Sheet 2 of 4

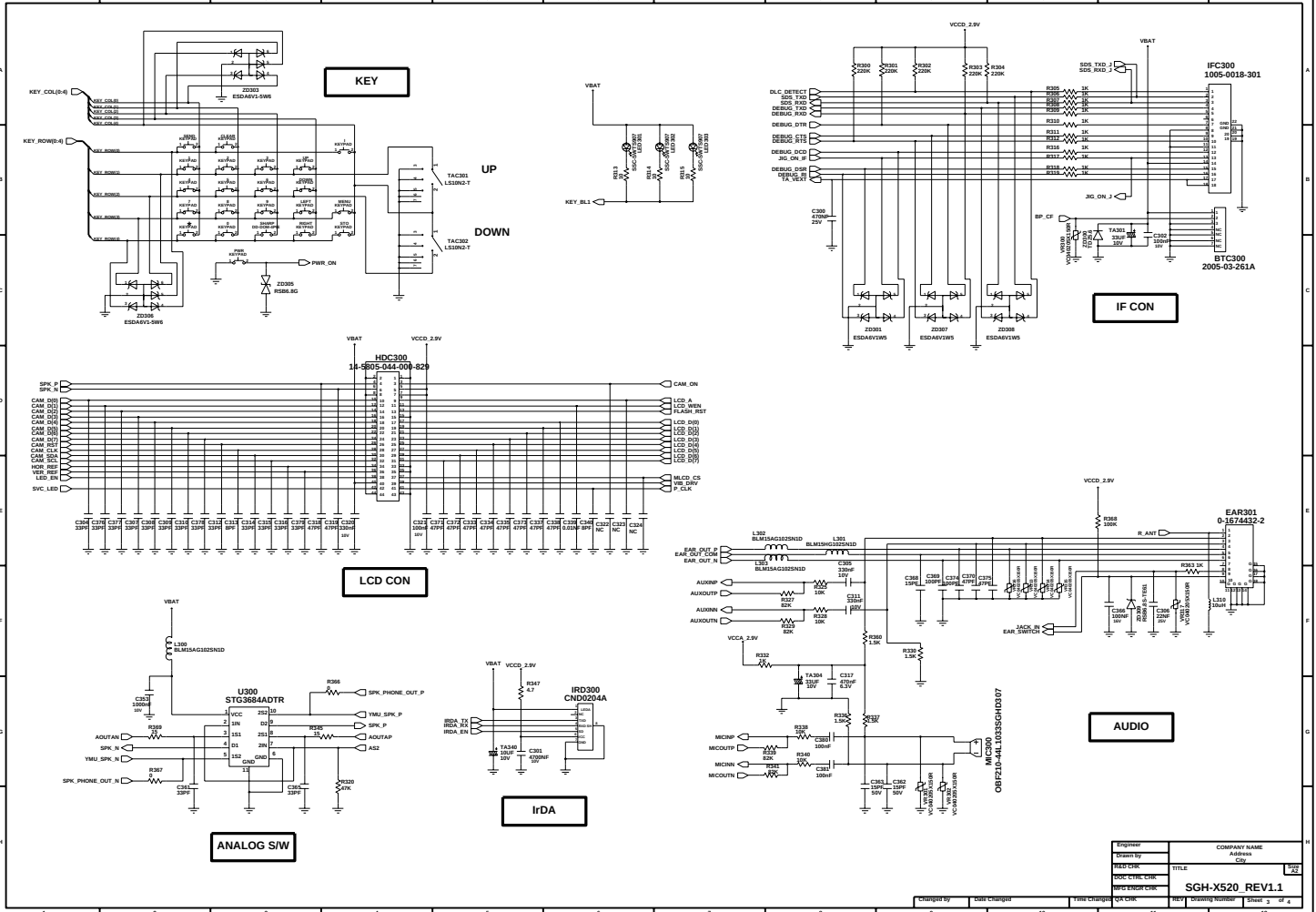
KEY
KEY_COL[0:4]
KEY_ROW[0:4]
ZD303
ESDA6V1-5W6
ZD306
ESDA6V1-5W6
ZD305
RSB6.8G
PWR_ON
UP
DOWN
TAC301
LS10N2-T
TAC302
LS10N2-T
VBAT
KEY_BL1
IF CON
IFC300
1005-0018-301
BTC300
2005-03-261A
ZD301
ESDA6V1W5
ZD307
ESDA6V1W5
ZD308
ESDA6V1W5
LCD CON
HDC300
14-5805-044-000-829
ANALOG S/W
U300
STG3684ADTR
IrDA
IRD300
CND0204A
AUDIO
EAR301
0-1674432-2
MIC300
OBF210-44L1033SGH0107
VCCD_2.9V
VCCA_2.9V
Engineer
Drawn by
R&D CHK
DOC CTRL CHK
DPD ENGR CHK
COMPANY NAME
Address
City
TITLE
SGH-X520_REV1.1
Size
A2
Changed by
Date Changed
Time Changed
QA CHK
REV
Drawing Number
Sheet 3 of 4

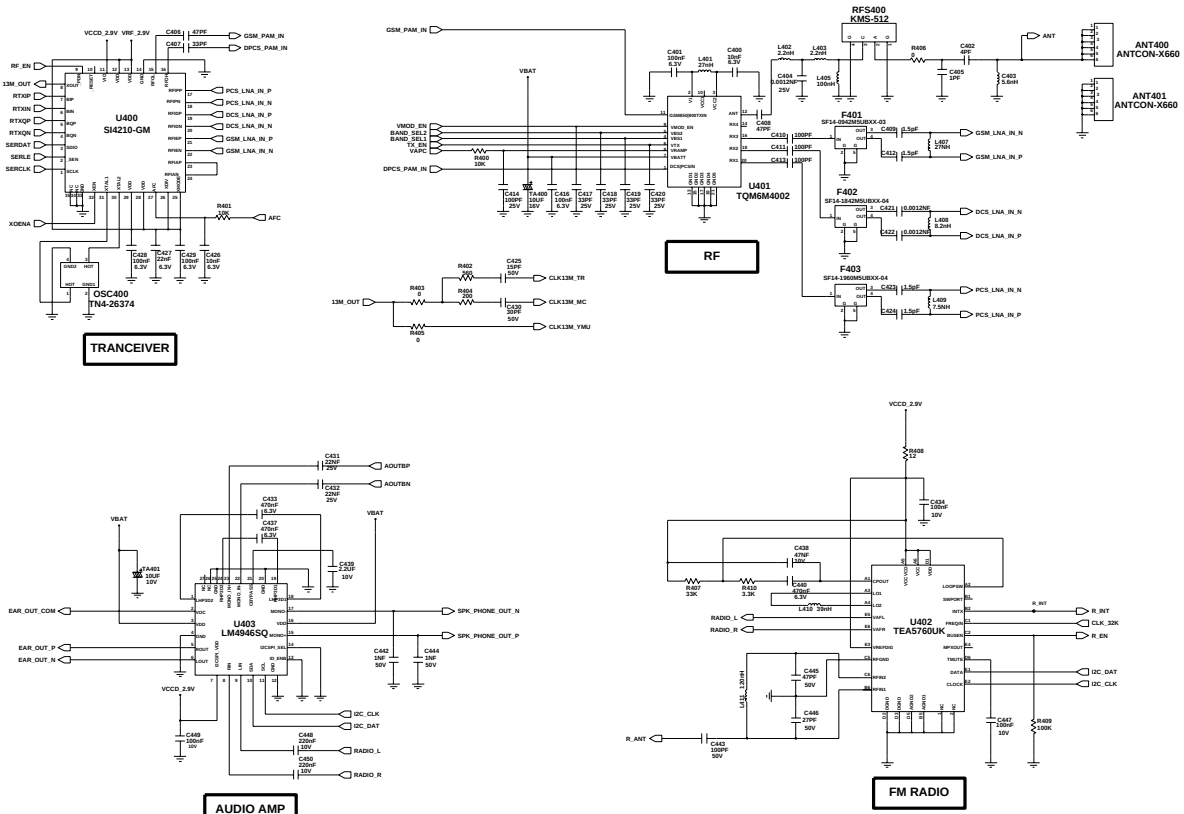

Engineer	COMPANY NAME Address City				
Drawn by					
R&D CHK	TITLE				Size A2
DOC CTRL CHK	SGH-X520_REV1.1				
DFG ENGR CHK					
Changed by	Date Changed	Time Changed	QA CHK	REV	Drawing Number

Sheet 4 of 4

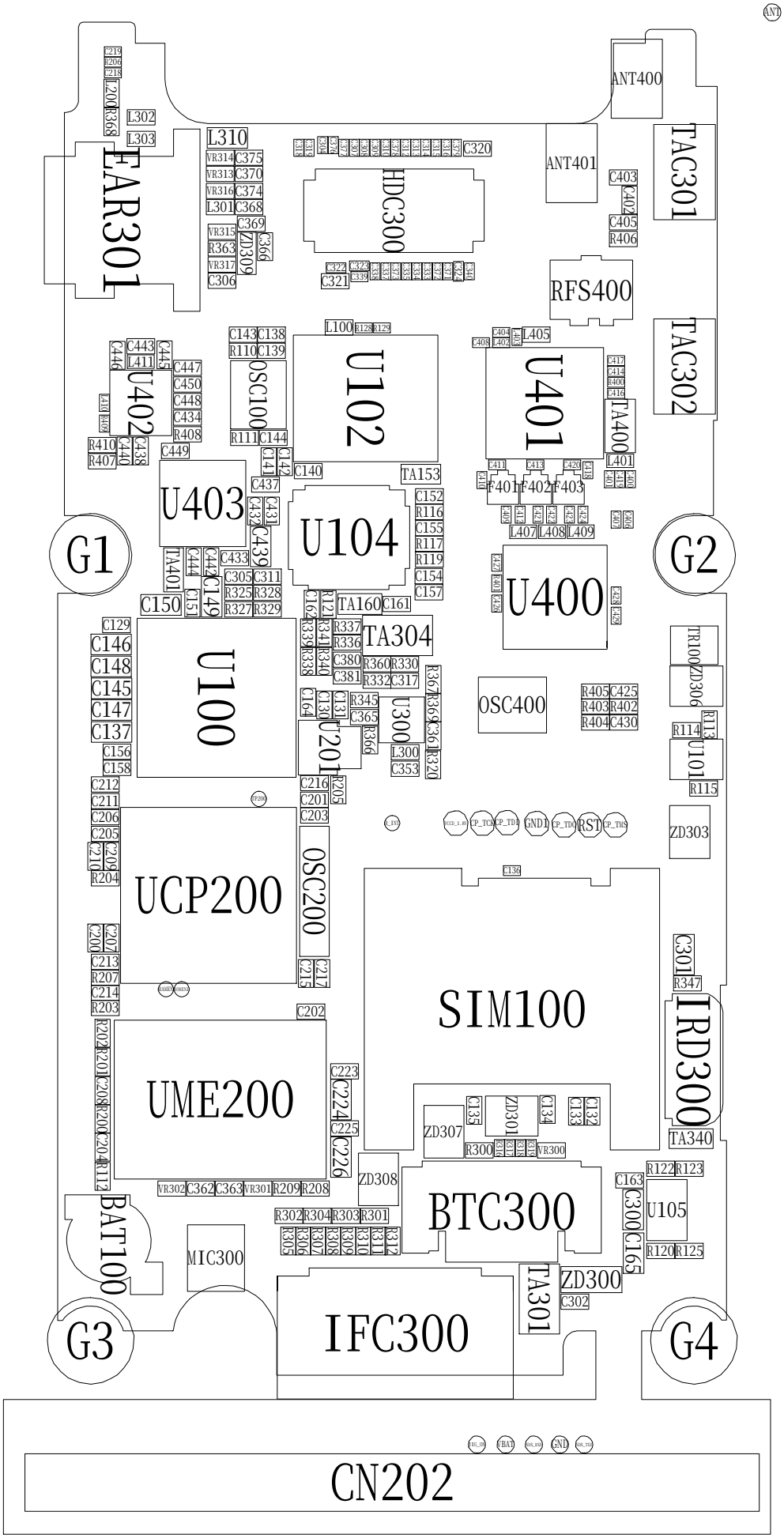
ANT
ANT400
ANT401
TAC301
TAC302
EAR301
HDC300
RFS400
U102
U401
TA400
U402
OSC100
U403
U104
U400
G1
G2
TA304
U100
OSC400
TR100
ZD306
U101
ZD303
UCP200
OSC200
SIM100
IRD300
TA340
UME200
ZD307
ZD301
ZD308
BTC300
U105
BAT100
MIC300
IFC300
TA301
ZD300
G3
G4
CN202

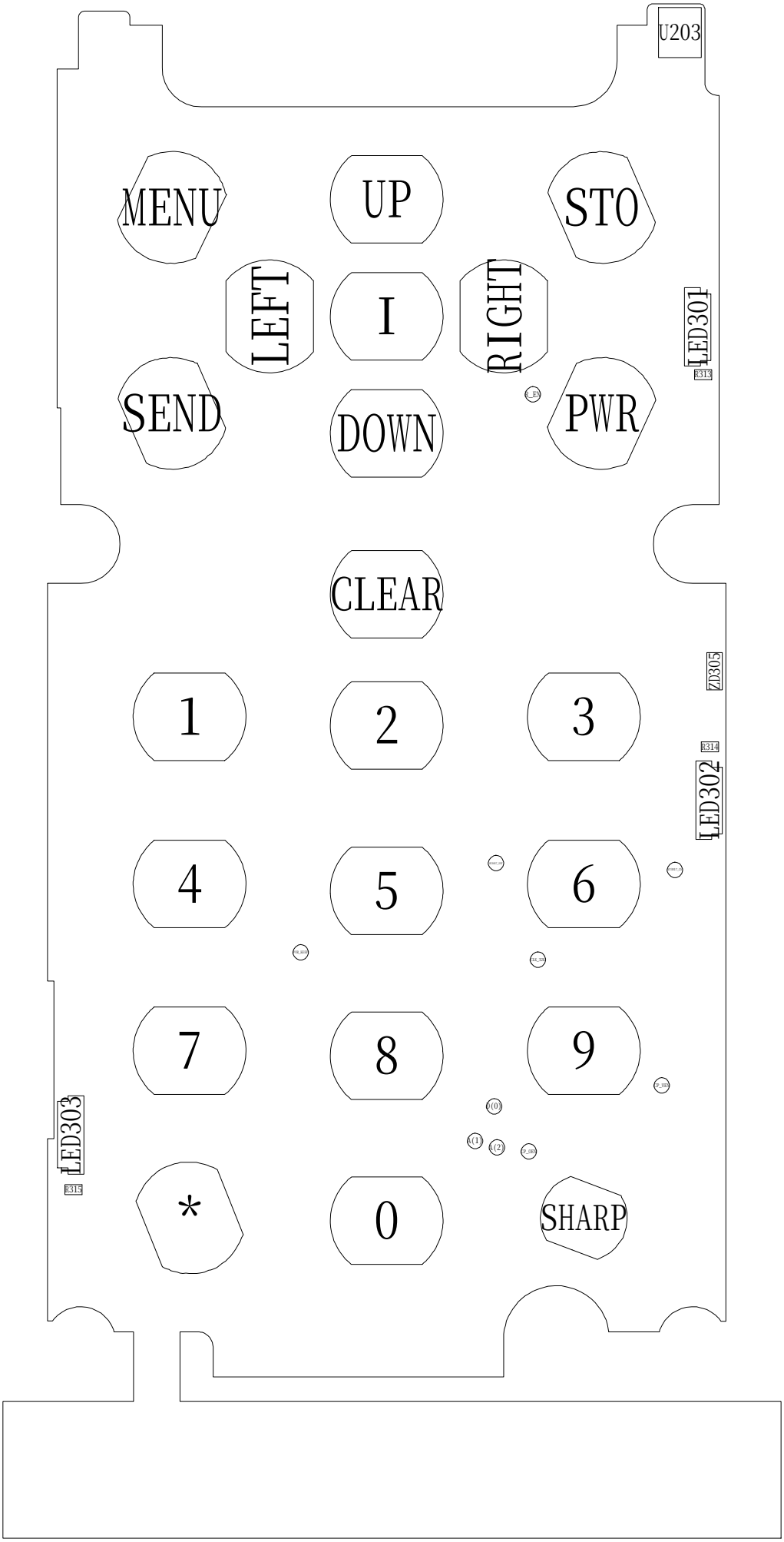
U203
MENU
UP
STO
LEFT
I
RIGHT
LED301
R313
SEND
DOWN
PWR
CLEAR
ZD305
1
2
3
R314
LED302
4
5
6
7
8
9
LED303
R315
*
0
SHARP