Internal Use Only

LG

Service Manual

LG-AS985

Date: Sep, 2014 / Issue 1.0

Table Of Contents

1. INTRODUCTION

1. 1 Purpose

This manual provides the information necessary to repair, calibration, description and download the features of this model.

1. 2 Regulatory Information

A. Security

Toll fraud, the unauthorized use of telecommunications system by an unauthorized part (for example, persons other than your company's employees, agents, subcontractors, or person working on your company's behalf) can result in substantial additional charges for your telecommunications services. System users are responsible for the security of own system. There are may be risks of toll fraud associated with your telecommunications system. System users are responsible for programming and configuring the equipment to prevent unauthorized use. The manufacturer does not warrant that this product is immune from the above case but will prevent unauthorized use of common carrier telecommunication service of facilities accessed through or connected to it. The manufacturer will not be responsible for any charges that result from such unauthorized use.

B. Incidence of Harm

If a telephone company determines that the equipment provided to customer is faulty and possibly causing harm or interruption in service to the telephone network, it should disconnect telephone service until repair can be done. A telephone company may temporarily disconnect service as long as repair is not done.

C. Changes in Service

A local telephone company may make changes in its communications facilities or procedure. If these changes could reasonably be expected to affect the use of the phones or compatibility with the net work, the telephone company is required to give advanced written notice to the user, allowing the user to take appropriate steps to maintain telephone service.

D. Maintenance Limitation

Maintenance limitations on the phones must be performed only by the manufacturer or its authorized agent. The user may not make any changes and/or repairs expect as specifically noted in this manual. Therefore, note that unauthorized alternations or repair may affect the regulatory status of the system and may void any remaining warranty.

E. Notice of Radiated Emission

This model complies with rules regarding radiation and radio frequency emission as defined by local regulatory agencies. In accordance with these agencies, you may be required to provide information such as the following to the end user.

F. Pictures

The pictures in this manual are for illustrative purposes only; your actual hardware may look slightly different.

G. Interference and Attenuation

A phone may interfere with sensitive laboratory equipment, medical equipment, etc. Interference from unsuppressed engines or electric motors may cause problems.

H. Electrostatic Sensitive Devices

ATTENTION

Boards, which contain Electrostatic Sensitive Device (ESD), are indicated by the sign. Following information is ESD handling:

• Service personnel should ground themselves by using a wrist strap when exchange system boards.

• When repairs are made to a system board, they should spread the floor with anti-static mat which is also grounded.

• Use a suitable, grounded soldering iron.

• Keep sensitive parts in these protective packages until these are used.

• When returning system boards or parts like EEPROM to the factory, use the protective package as described.

1. 3. Specifications

KEY FEATURES

- Android 4.4.2
- Up to 7 Customizable Home Screens
- 5.5" Touch Screen
- 13MP AF&OIS with flash, 2.1MP VT Image sensor
- 3G/4G Mobile Hotspot
- DivX®, H.264, H.263 Capable

ENHANCED USER EXPERIENCE

- Android 4.4.2
- Home Screens – customize 1 to 7 screens with shortcuts to apps, favorites, and widgets
- Virtual Keypad – use one continuous finger motion to input text when composing a message
- Exchange Support – improved security, remote wipe capability for Exchange administrators, support for Exchange calendars in the Calendar application and Global Address Lists lookup in the Email and Contact applications
- Proximity Sensor – locks the touch screen and buttons while talking on the phone
- Motion Sensor – Digital compass , Accelerometer and Gyroscope
- USB Charging via Computer
- Airplane Mode (RF Off)

*Available for Exchange 2007 and higher.

DESIGN

- Thinner and Stylish Design
- 5.5" IPS QHD Display
- Capacitive Touch Screen – Glass with fast and accurate response
- Touch Vibration for Tactile Feedback*
- Micro USB Charging Port

*Only available on certain interactions with the touch screen.

MOBILE MEDIA

- Android Market™ – browse and download thousands of free and paid apps from around the world†
- Live Wallpaper – dynamic, animated backgrounds
- Full Web Browsing
- Mobile Instant Messaging – Google Talk™
- Gmail™ and Email – mobile personal and corporate email†
- Visual Voice Mail†
- Text, Picture, Video, and Voice Messaging†
- Java Support

CAMERA/VIDEO

- 13MP AF&OIS with flash, 2.1MP VT CMOS Image sensor and Camcorder*
- Camera Resolutions: 13M(4160x3120), W10M(4160x2340), 8M(3264x2448), 1M(1280 x 960)
- Camera and Video Zoom: up to 8x
- Image Editor: zoom, rotate, crop images
- Brightness, ISO, White Balance,* Color Effects,* Shot Mode, Self-Timer
- Time Catch Shot – take sequential five pictures at once before the shutter key is touched.
- Cheese shutter – take photo with voice command.
- Continuous Shot – take 20 shots in rapid sequence.
- Video Resolutions: Full HD 60fps(1920x1080), Full HD 30fps(1920x1080), HD(1280 x 720), MMS(320 x 240), MMS(176 x 144)
- Video Recording Time: up to 1.2MB (sending) and 4GB/27 minutes (saving)** -
- Audio zoom – Increase sound sensitivity in zooming area and decrease noise when recording.

*Available in both video and camera modes.

**Depends on available memory - Full HD 30fps(1920x1080)

MULTIMEDIA

- DivX® Video Playback
- Video Player for AVI, WMV, MP4, MKV, 3GP, and 3G2 Formats
- Verizon Video
- Music Player for MP3, WMA, and Unprotected AAC
- Stereo Sound via Headset or *Bluetooth*
- Multitask While Playing Music in the Background
- Music Library – Organized by Artists, Albums, Songs, and Playlists
- Repeat and Shuffle Music Playback Modes
- 32GB Internal Memory Enhancement
- Media sync (MTP) – transfer files between your phone card and PC*

*USB cable (sold separately) required.

BLUETOOTH®

- Version: 4.0
- Supported Profiles: headset, hands-free, object push, advanced audio distribution (stereo), audio/video remote control, file transfer, phone book access, message access, serial port, human interface device
- Listen to Music with Optional Stereo *Bluetooth* Headset*
- Send User-Generated Pictures (JPEG) and Videos via *Bluetooth* Wireless Technology

*Accessories sold separately.

VOICE/AUDIO

- One-Touch Speakerphone*
- Speaker-Independent Voice Commands
- Voice-Activated Dialing
- Text to Speech
- MP3 Music Ringer Support (clips from hit songs)†
- Voice Memo Recording
- 31 Unique Ringtones + Vibrate and Silent Modes
- Set Voice Memos as Ringtones
- TTY Support
- Hearing Aid Compatible **M3/T3**

*Only available during a call.

TOOLS & DATA

- Android Apps: Alarm/Clock, Chrome, Calculator, Calendar (Corporate or Google), Camera, Contacts, Email, File Manager, Gallery, Gmail, Google+, Life Square, Maps, Messaging, Messenger, Music Player, Notebook, Phone,Play Books, Play Movies & TV, Play Music, Play Store, POLARIS Office 5, Quick Remote, Quick Translator, Richnote, Settings, Tasks, Talk, Video Editor, Videos, Voice Mate, Voice Recorder, Voice Search, Weather, Youtube
- Navigator® – spoken turn-by-turn directions showing real-time traffic
- Wi-Fi Connectivity – IEEE 802.11a/b/g/n/ac
- Phone Book – unlimited fields* for numbers, emails, physical addresses, IM screen names, notes, nickname, web addresses, special dates, and a picture ID**
- FOTA Capable – upgrade firmware over the air†
- S-GPS and A-GPS Support for Enhanced Location Accuracy

*Depends on available memory.

**Dependent on photos stored in your gallery.

SPECIFICATIONS

- Technology: CDMA/WCDMA/GSM/LTE
- Frequencies:

Band	Tx	Rx
GSM850	824.2~848.8	869.2~893.8
GSM900	880.2~914.8	925.2~959.8
GSM1800	1710.2~1784.8	1805.2~1879.8
GSM1900	1850.2~1909.8	1930.2~1989.8
WCDMA B5	826.4~846.6	871.4~891.6
WCDMA B8	882.4~912.6	927.4~957.6
WCDMA B2	1852.4~1907.6	1932.4~1987.6
WCDMA B1	1922.4~1977.6	2112.4~2167.6
DCN	817~849	862~894
PCS	1850~1915	1930~1995
LTE B13	777~787	746~756
LTE B4	1710~1755	2110~2155
GPS	1575.42Mhz	
BT	24~2485Mhz	

- Data Transmission: 1xRTT(0,1,10), 1xEVDO(0,1), LTE(B13 / B4)
- Dimensions: 146.31(H) x 74.64(W)x 8.95(D) (mm)
- Weight: 149.8g
- Display: 5.5”, 2560 x 1440 pixels, 16.7M Colors, TFT
- Standard Battery: 3,000[mAh] Typ.
- Internal Memory Size: 32 GB

ACCESSORIES

- Travel Adapter and USB Data Cable*
- Car mount (CMT) (Optional)
- Smart Quick Cover (Optional)
- Desk Top Cradle (DTC) (Optional)
- Vehicle Power Charger (VPC) (Optional)
- Wireless Charger (Optional)

2. PERFORMANCE

2.1 Product Name

AS985 : US Cellular/US PCS/WCDMA/GSM/LTE B13,B4,B3,B7/GPS

(EVDO Rev_0 / EVDO Rev_A)

2.2 Supporting Standard

Item	Feature	Comment
Supporting Standard	US Cellular/US PCS/WCDMA/GSM/LTE B13,B4,B3,B7/GPS	
	Cellular TX : 824.82~848.19 MHz WCDMA850 TX:826.4~846.6 MHz GSM850 TX: 824.2~848.8 MHz Cellular RX : 869.82~893.19 MHz WCDMA850 RX:871.4~891.6 MHz GSM850 RX: 869.2~893.8 MHz PCS TX : 1850~1910 MHz WCDMA900 TX: 882.4~912.6 MHz GSM900 TX: 880.2~914.8 MHz PCS RX : 1930~1990 MHz WCDMA900 RX: 927.4~957.6 MHz GSM900 RX: 925.2~959.8 MHz LTE13 TX : 777~787 MHz WCDMA1900 TX: 1852.4~1907.6 MHz GSM1800 TX: 1710.2~1784.8 MHz LTE13 RX : 746~756 MHz WCDMA1900 RX: 1932.4~1987.6 MHz GSM1800 RX: 1805.2~1879.8 MHz LTE 4 TX : 1710~1755 MHz WCDMA2100 TX: 1922.4~1977.6 MHz GSM1900 TX: 1850.2~1909.8 MHz LTE 4 RX : 2110~2155 MHz WCDMA2100 RX: 2112.4~2167.6 MHz GSM1900 RX: 1930.2~1989.8 MHz LTE 3 TX : 1710~1785 MHz LTE 3 RX : 1805~1880 MHz LTE 7 TX : 2500~2570 MHz LTE 7 RX : 2620~2690 MHz GPS : 1575.42 MHz	

2.3 Functions of Major Semi-Conductors

Classification	Function
MSM8974	Terminal operation control and digital signal processing
DDR2 Memory (H9CKNNNBPTMRLR-NTM) eMMC(THGBMAG8A4JBA4R)	NAND Flash Memory (32Gbyte) + SDRAM (16Gbit) Storing of terminal operation program
WTR1605L WTR1605	Converts Rx and Tx RF signal to baseband signal

2.4 HW Features

Item	Feature	Comment
Form Factor	DOP	
Battery	1) Capacity Standard : Li-Ion, 3,000mAh(TYP)	
	2) Packing Type : Removable Battery	
Size	Standard : 146.31 x 74.64 x (mm)	
Weight	149.8g (with Battery)	
PCB	any-layer 10layers 0.8mm Main	
Stand by time	CDMA DCN/PCS over 310 hrs	@ SCI=2(pwr: -75dBm)
Charging time	Up to 270 mins	@ Power Off/ 3000mAh
Talk time	CDMA over 420 mins	@ Rx pwr -92dBm
LCD	5.5” (2560x1440 pixel) 36.8M TFT LCD	
Built-in Camera	13 Mega Auto Focus &OIS / 2.1 Mega VT CAM	
Keypad	Back side Key : 3 (Volume Up Key 1, Power Key 1, Volume Down Key 1)	
ANT	CDMA/GSM(850/900/1800/1900)/WCDMA (B1/B2/B5/B8) : LDS Type LTE B13 Drx/LTE B4 Prx : LDS Type LTE B13 Prx/LTE B4 Drx : FPCB Type GPS/DCN Drx : FPCB Type BT/Wi-Fi(2.4GHz, 5GHz) : FPCB Type PCS Drx : FPCB Type	

System connector	5 Pin	
Ear Phone Jack	4pole, 3.5Φ Ear Jack	
Memory	NAND Flash : 32GByte SDRAM : 24Gbit	
Speech coding	EVRC, QCELP, AMR	
Data	Built in Data support	
Vibrator	Q-Coin vibrator	
Bluetooth	V4.0 BLE	
(for Buzzer Function)	SW decoded	
Music Player	MP3, AAC, AAC+, WMA, OGG	
Video Player	H.263, H.264, MPEG-4, WMV	
Camcorder	MPEG-4	
Voice Recording	Yes	
Speaker Phone mode Support	Yes	
Travel Adapter	Yes	
CDROM	No	
Stereo Headset	No	
Data Cable	Yes	
T-Flash (External Memory)	Yes	

2.5 SW Features

Item	Feature	Comment
RSSI	Yes	
Charging	Yes	
Key Volume	Yes	
Audio Volume	Yes	
Time / Date Display	Yes	
Multi-Language	Yes	62 languages includes English, Spanish, Korean, Chinese, French, German and Italian.
Quick Access Mode	QuickMemo	
PC Sync	No	
Speed Dial	Yes	
Profile	No	
CLIP / CLIR	Yes	GSM only support
Phone Book	Name : First Name/Last Name/Middle Name/Name Prefix/Name Suffix Phone : Mobile/Home/Home Fax/Work/Other/Pager/Work Fax/Car/Main/Other Fax/Radio/Assistant Email : Home/Work/Other IM:AIM/Google Talk/ICQ/Jabber/QQ/Skype/Window Live/Yahoo Address : Home/Work/Other Events : Birthday/Anniversary Groups Ringtone Notes Nickname Website Organization Notification LED	There is no limitation on the number of items. It depends on Available memory amount.
Last Dial Number	Yes	Last Dial Numbers, Last Received Numbers and Last Missed Numbers can store.
Last Received Number	Yes	Last Dial Numbers, Last Received Numbers and Last Missed Numbers can store.
Last Missed Number	Yes	Last Dial Numbers, Last Received Numbers and Last Missed Numbers can store.

Item	Feature	Comment
Form Factor	DOP	
Battery	1) Capacity Standard : Li-Ion, 3,000mAh(TYP)	
	2) Packing Type : Removable Battery	
Size	Standard : 146.31 x 74.64 x (mm)	
Weight	149.8g (with Battery)	
PCB	any-layer 10layers 0.8mm Main	
Stand by time	CDMA DCN/PCS over 310 hrs	@ SCI=2(pwr:-75dBm)
Charging time	Up to 270 mins	@ Power Off/3000mAh
Talk time	CDMA over 420 mins	@ Rx pwr -92dBm
LCD	5.5" (2560x1440 pixel) 36.8M TFT LCD	
Built-in Camera	13 Mega Auto Focus &OIS / 2.1 Mega VT CAM	
Keypad	Back side Key : 3 (Volume Up Key 1, Power Key 1, Volume Down Key 1)	
ANT	CDMA/GSM(850/900/1800/1900)/WCDMA(B1/B2/B5/B8) : LDS Type LTE B13 Drx/LTE B4 Prx : LDS Type LTE B13 Prx/LTE B4 Drx : FPCB Type GPS/DCN Drx : FPCB Type BT/Wi-Fi(2.4GHz, 5GHz) : FPCB Type PCS Drx : FPCB Type	
System connector	5 Pin	
Ear Phone Jack	4pole, 3.5Φ Ear Jack	
Memory	NAND Flash : 32GByte SDRAM : 24Gbit	
Speech coding	EVRC, QCELP, AMR	
Data	Built in Data support	

Search by Number/Name	Name / Number	
Group	Yes	There is no limitation on the number of items. It depends on available memory amount. Group features can be added or edited by user. (Except for some specific groups.)
Fixed Dial Number	No	
Service Dial Number	No	
Own Number	No	
Voice Memo	Yes	Voice Recorder
Call Reminder	No	
Network Selection	Yes	Global, LTE/CDMA, LTE/GSM/UMTS
Mute	Yes	
Call Divert	Yes	Call forwarding
Call Barring	Yes	GSM only support
Call Charge (AoC)	No	
Call Duration	Yes	GSM only support
SMS ()	There is no limitation on the number of items. It depends on available memory amount.	
SMS Over GPRS	Yes	
Melody / Picture Send / Receive / Save	No No	
MMS MPEG4 Send / Receive / Save	Yes Yes	
Long Message	Yes	
Cell Broadcast	No	
Download	FOTA/EUT	
Game	Yes	Games
Calendar	Yes	
Memo	Yes	Richnote
World Clock	Yes	Alarm/clock

Unit Convert	No	
Stop Watch	Yes	Alarm/Clock
Wall Paper	Yes	
WAP Browser	No	Support HTML Browser
Download Melody/Wallpaper	Yes	Play Store, Verizon Tones
SIM Lock	Yes	
SIM Toolkit	Yes	
MMS	Yes	
EONS	No	
CPHS	No	
Camera	Yes	13M AF
JAVA	No	
Voice Dial	Yes	
IrDa	No	
Bluetooth	Yes	Ver. 4.0 + LE
FM radio	No	
Hold / Retrieve	Yes	
Conference Call	Yes	Max. 3
DTMF	Yes	
Memo pad	Yes	QuickMemo
TTY	Yes	
AMR	Yes	
SyncML	No	
IM	Yes	Google Talk
Email	Yes	

2.6 Assembly components

2.7 SMT Componnent : Top side

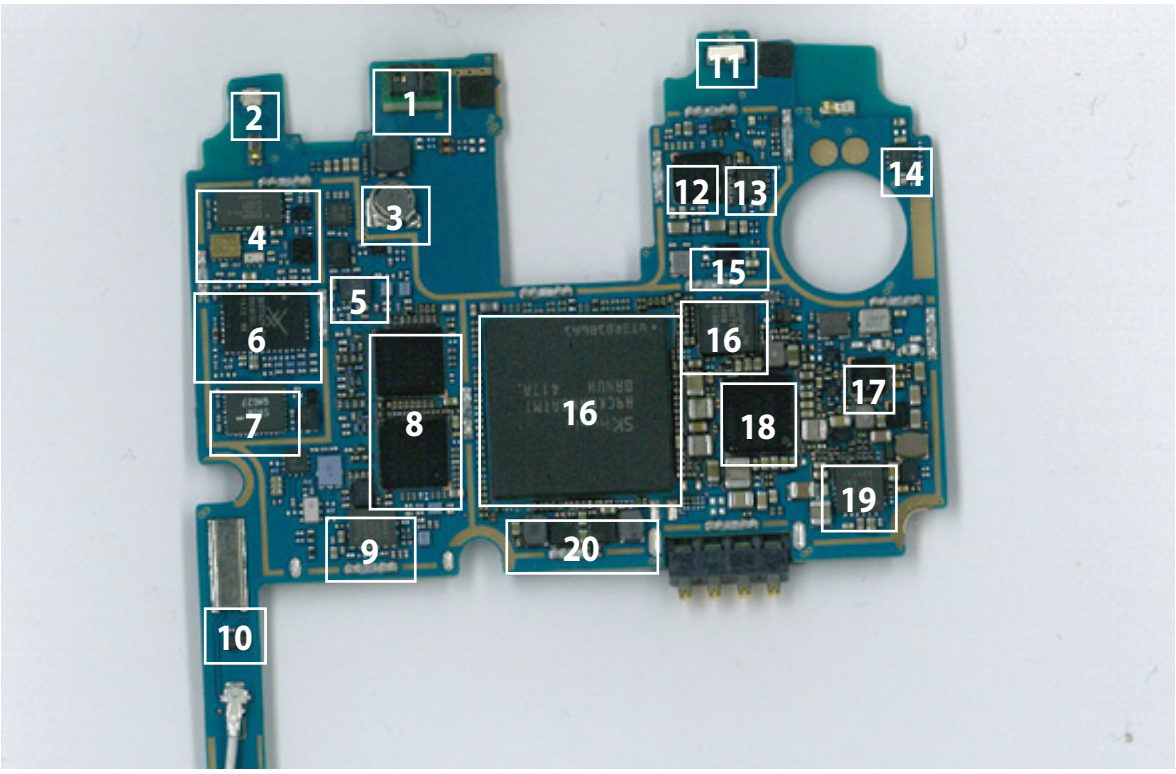

1. Proximity sensor
2. RGB LED
3. Back up battery
4. B13 PA module
5. B7 PAM
6. MMPA
7.FEMID
8.3rd MIC
9.CDMA Dual PAM
10.Hall IC
11. IRRC LED
12. Audio codec
13. IRRC sensor
14. IRRC sensor
15. IRRC IC
16. Slimport IC
17.NFC IC
18.PM8941
19.Charging IC
20.RF DC-DC

2.8 SMT Componnent : Bottom side

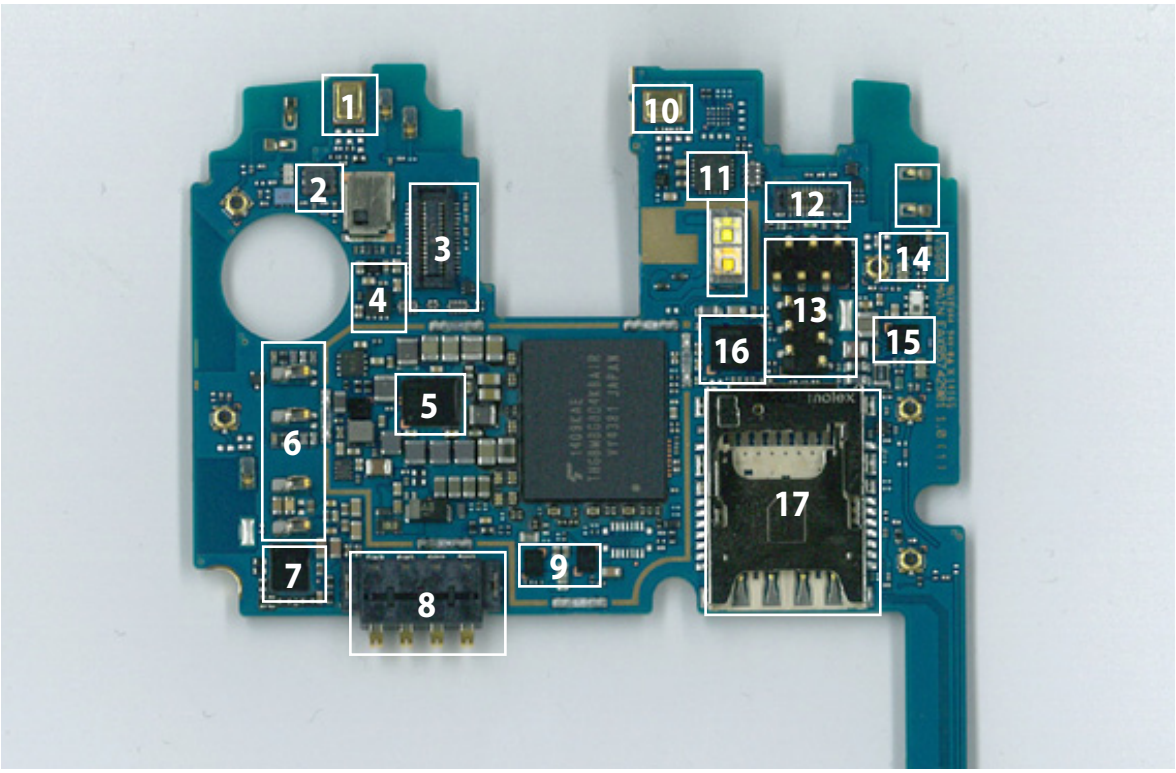

1. 3rd MIC
2. Pressure sensor
3. Main CAM connector
4. Main CAM LDO
5. PM8841
6. NFC&Wireless charging Antenna pin
7. Wireless charger
8. Battery connector
9. OVP
10. 2nd MIC
11. Gyro sensor
12. VT camera connector
13. 3 KEY connector
14. Compass
15. Audio boost amp
16. Audio codec
17. SIM & SD card COMBO

3. TROUBLE SHOOTING

3.1 CDMA 1X/DO Rx Part Troubleshooting

3.1.1 DCN 1X/DO Rx

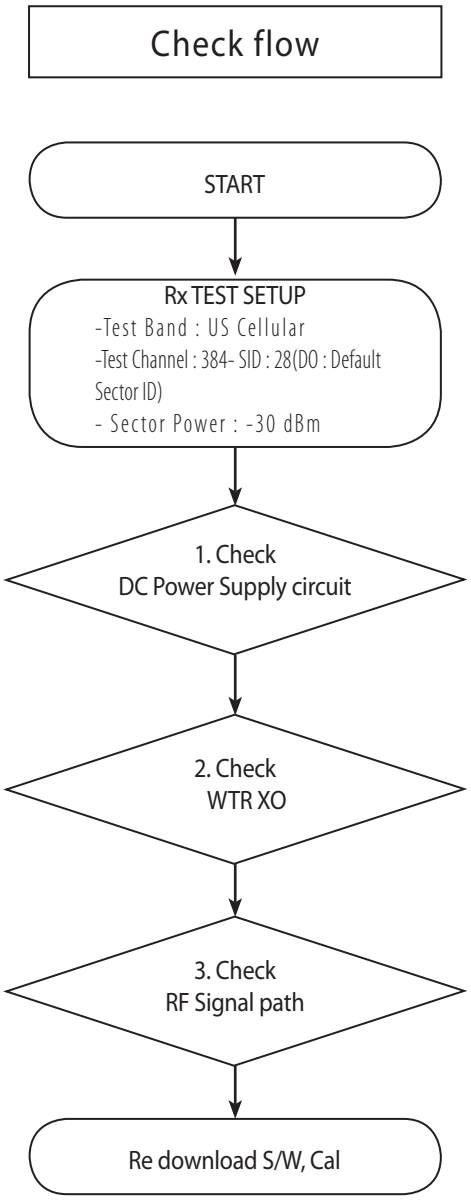

* there are no Test Points on the IQ Data Line. So It is impossible to check the IQ Data Wave form

3.1.1 DCN 1X/DO Rx

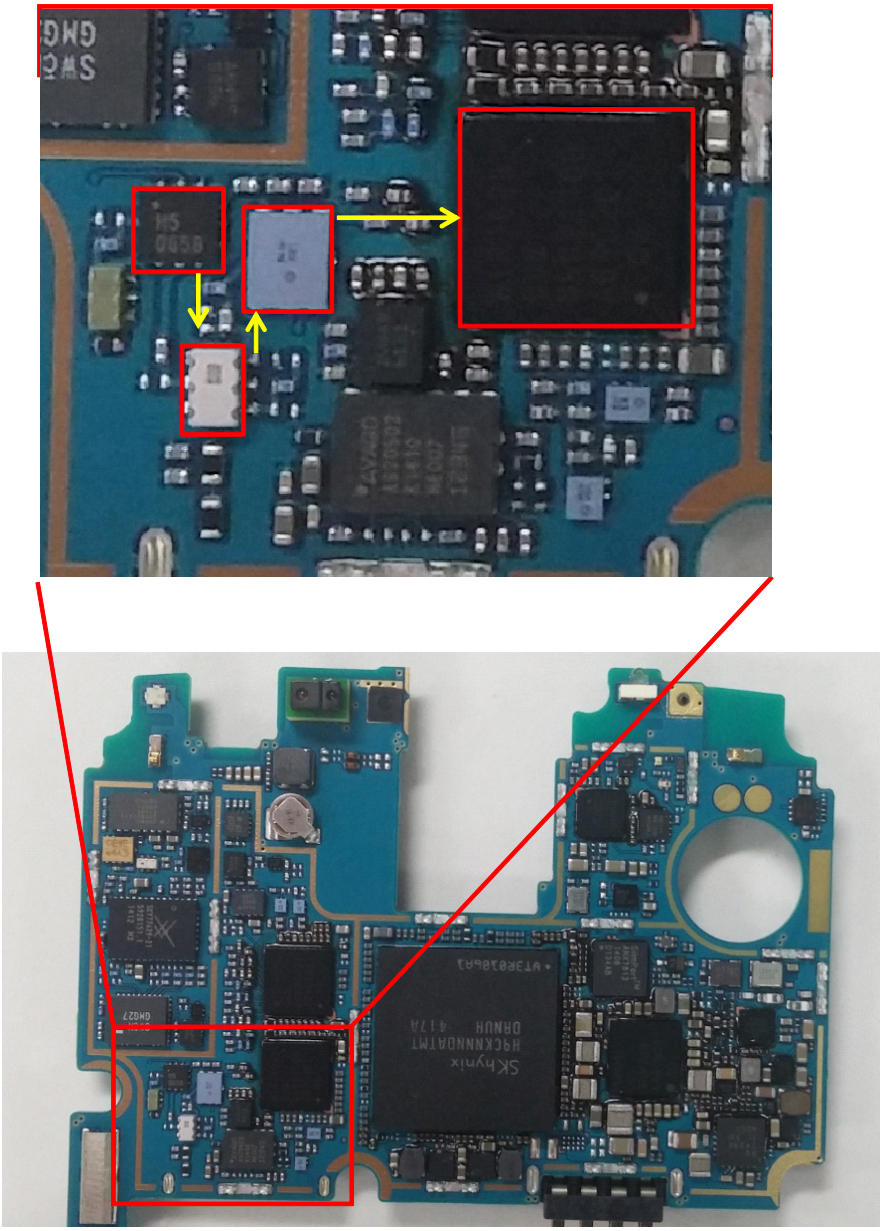

3.1.1.1 Checking DC Power supply circuit (+1.3V_VREG/ +2.05V_VREG / +1.8V_VREG)

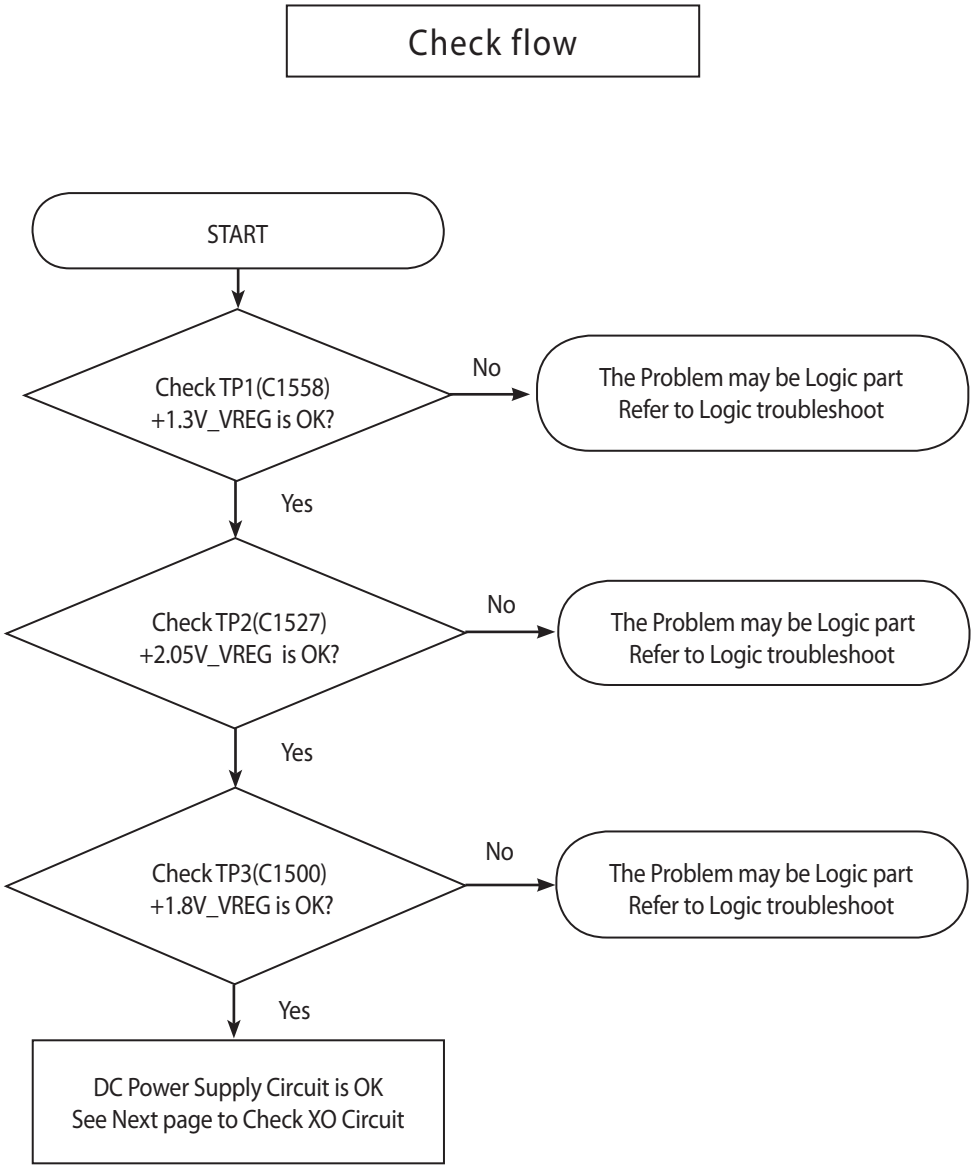

3.1.1.1 Checking DC Power supply circuit

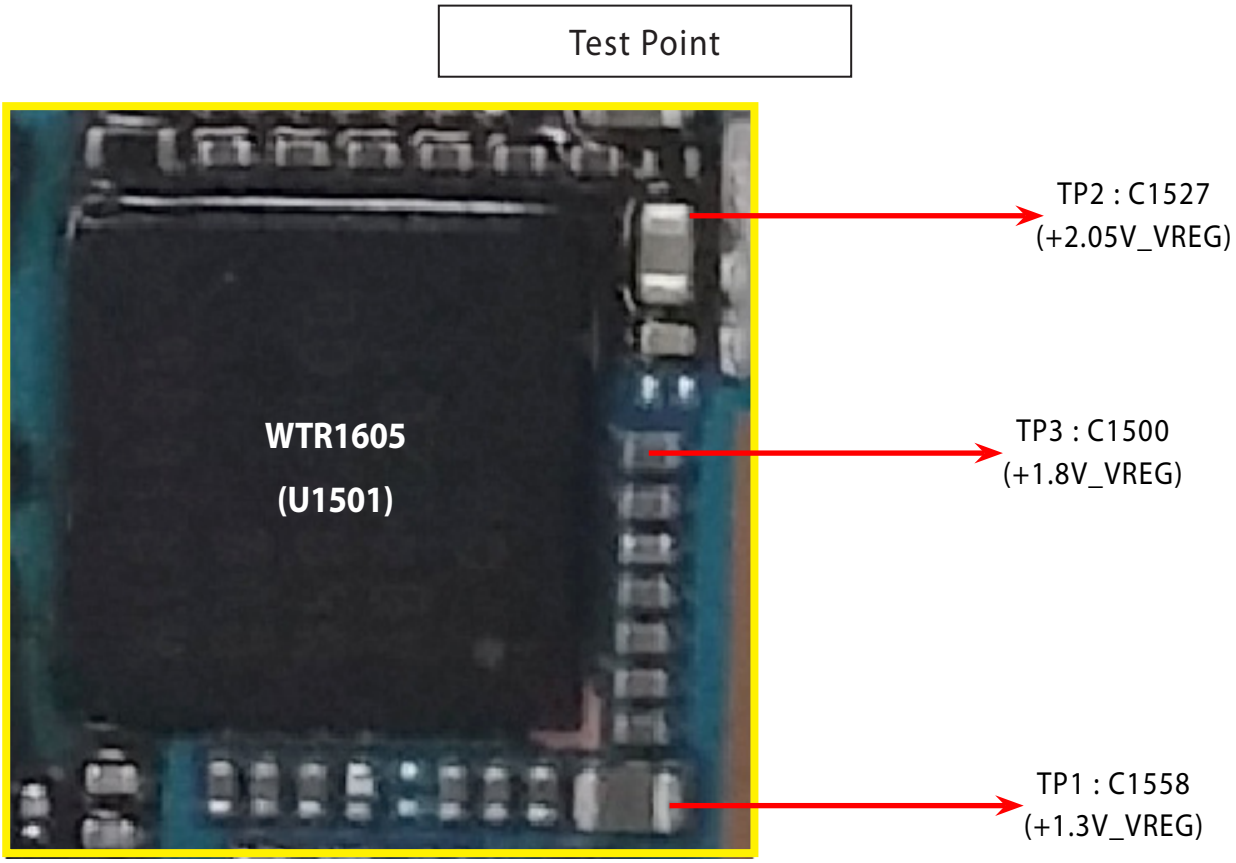

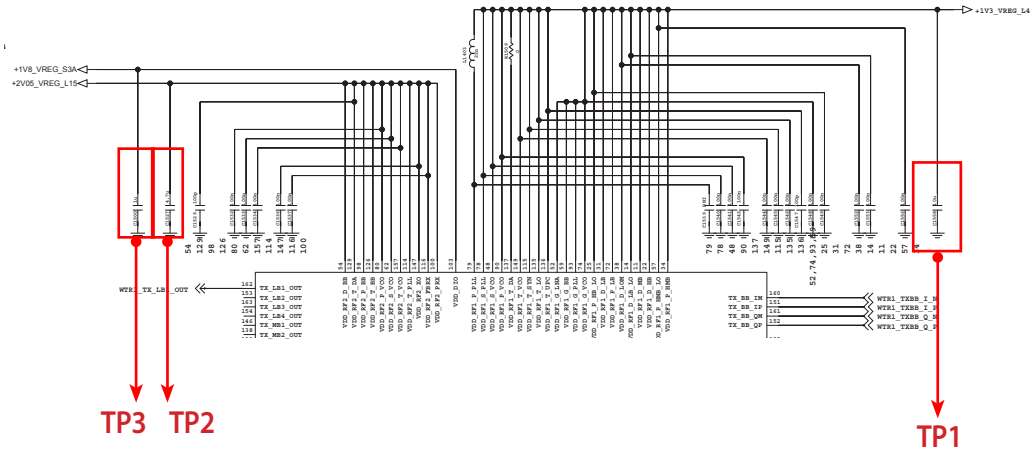

3.1.1.2 Checking WTR XO circuit

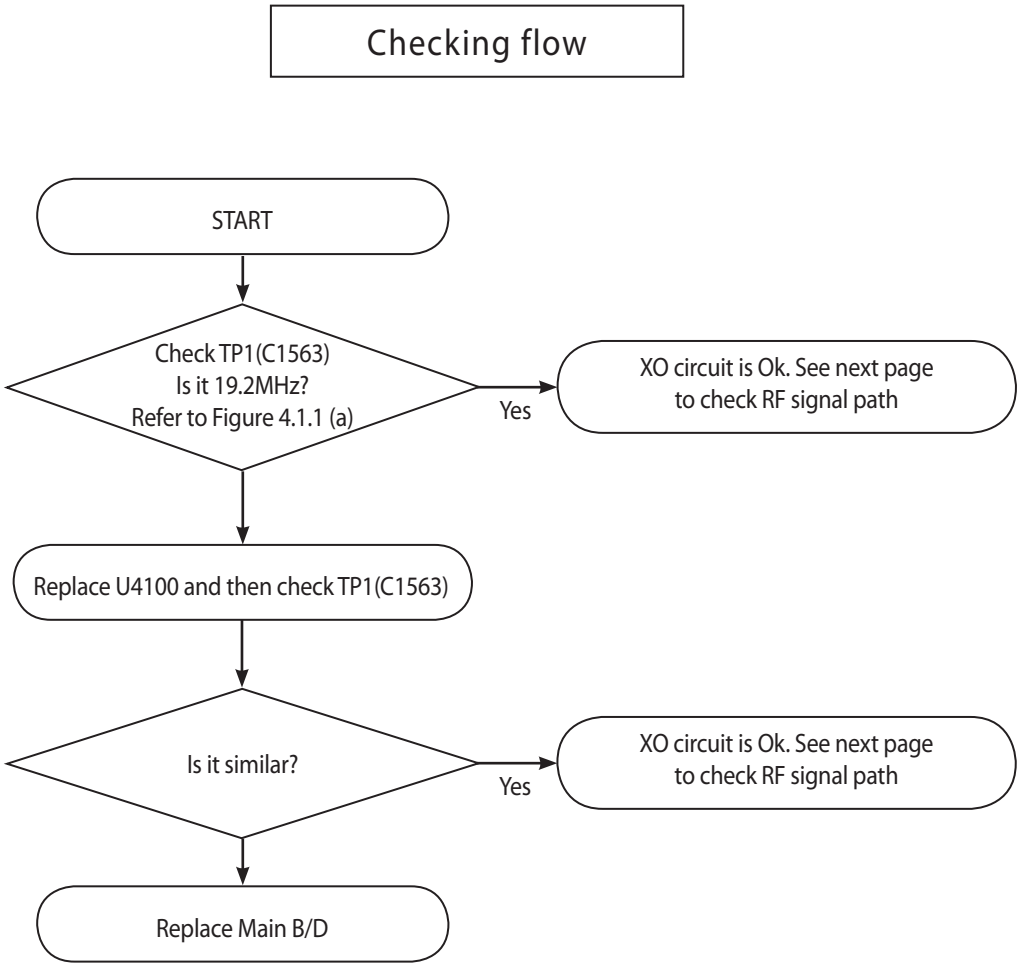

Waveform

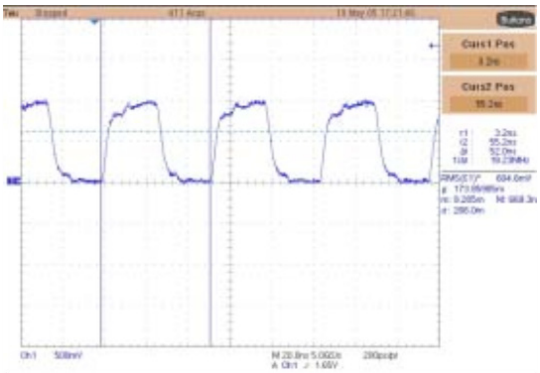

3.1.1.2 Checking WTR XO circuit

Test Point

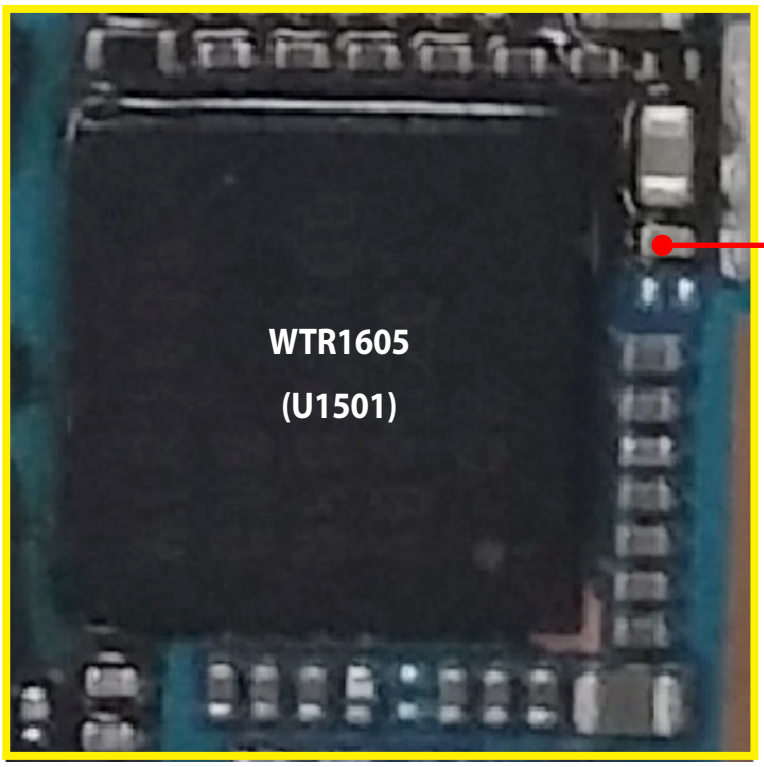

TP1 : C1563
(WTR0_XO_IN)

Bottom Side

Circuit Diagram

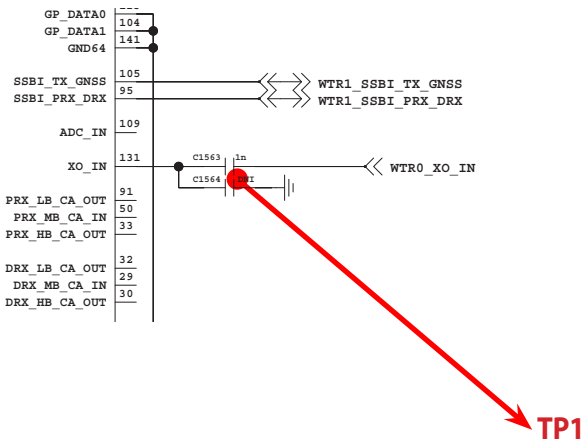

3.1.1.3 Checking RF signal path (SDPT)

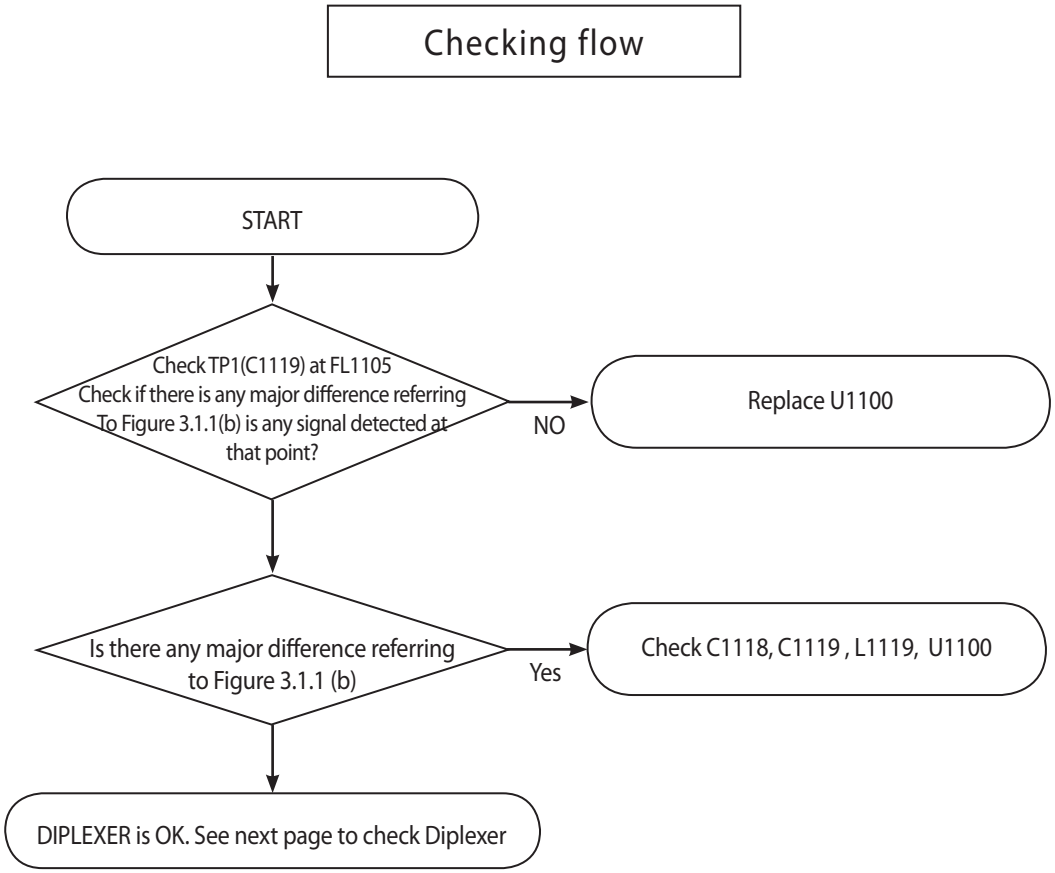

3.1.1.3 Checking RF signal path (SPDT)

Test Point

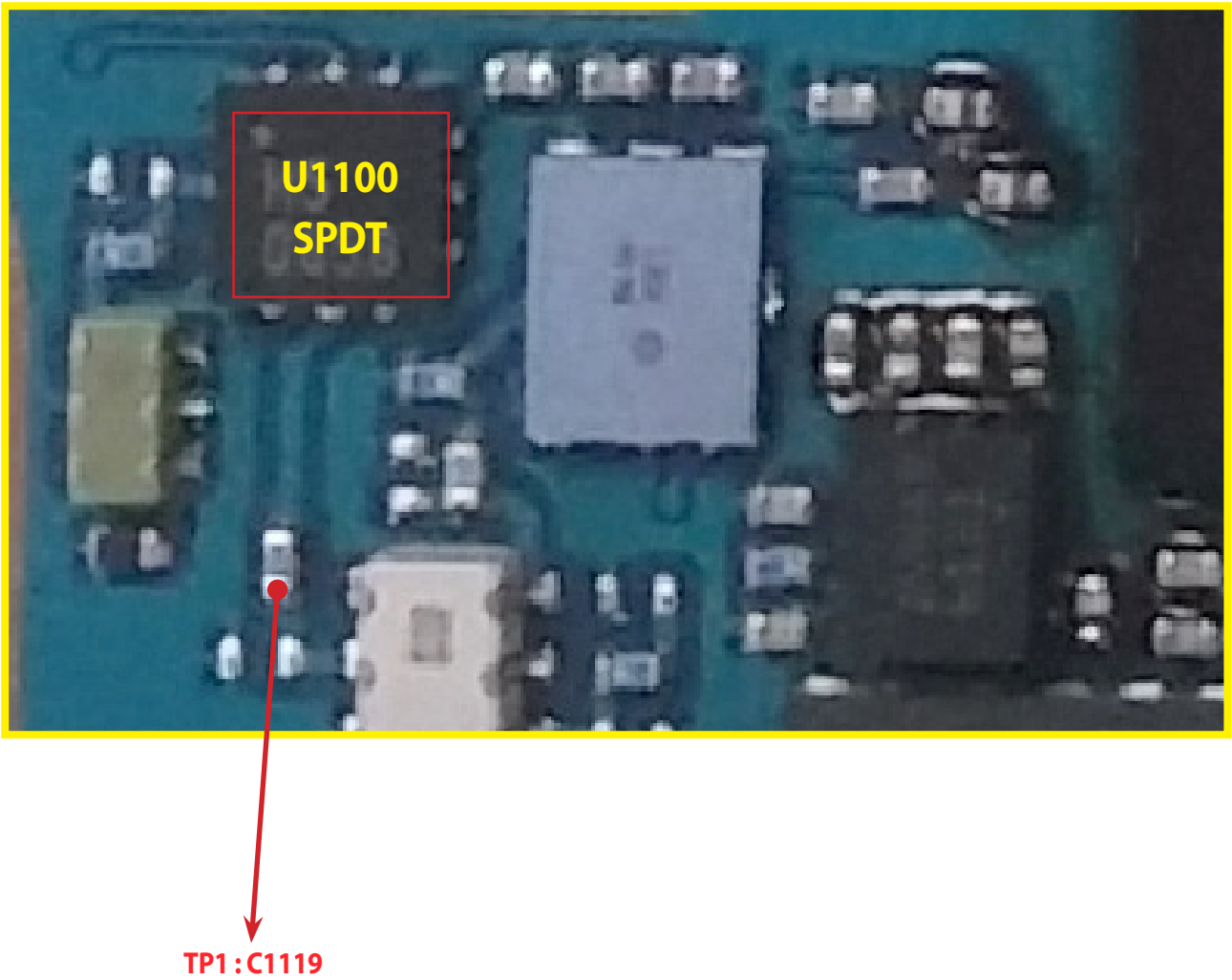

3.1.1.3 Checking RF signal path (SPDT)

Circuit Diagram

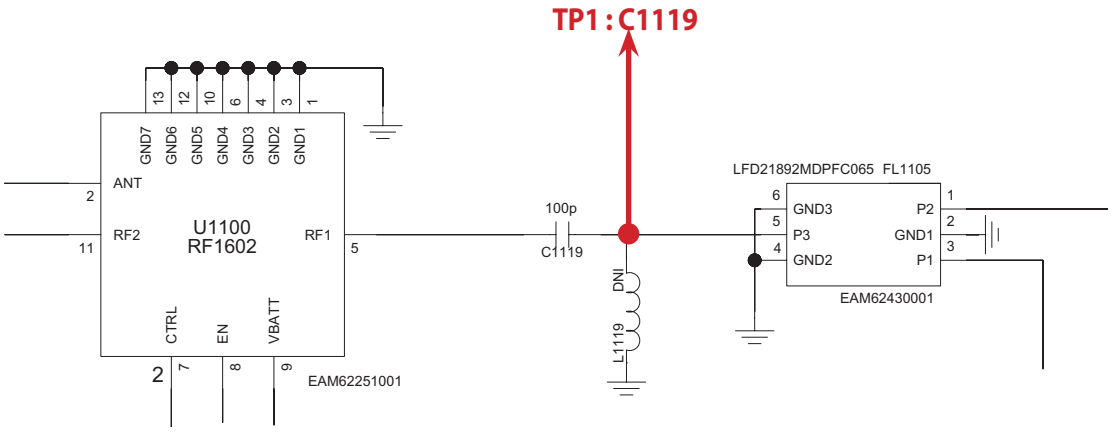

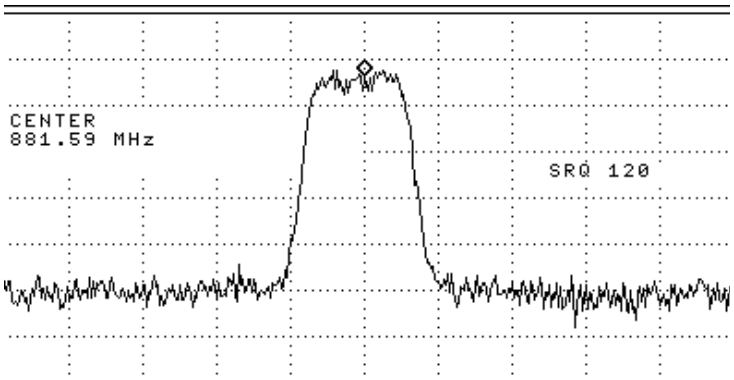

Figure 3.1.1 (b)

3.1.1.4 Checking RF signal path (Diplexer)

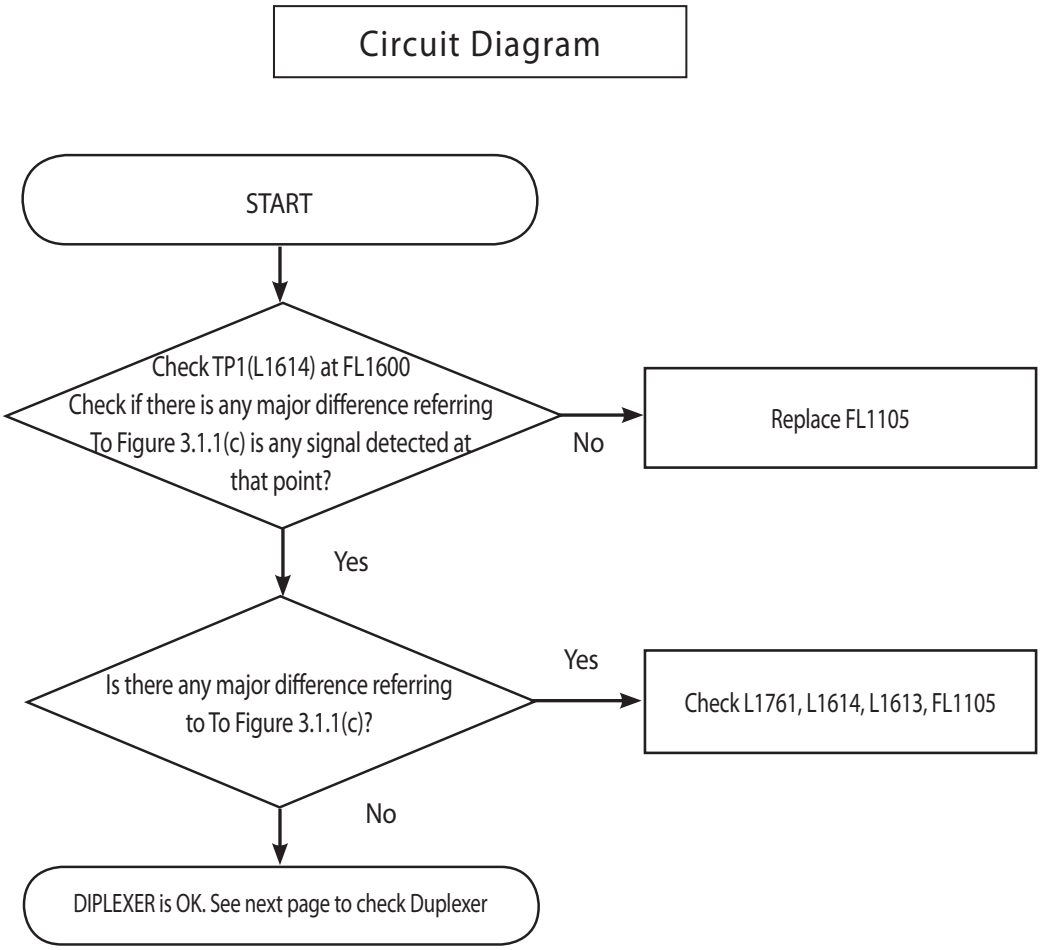

3.1.1.4 Checking RF signal path (DIPLEXER)

Test Point

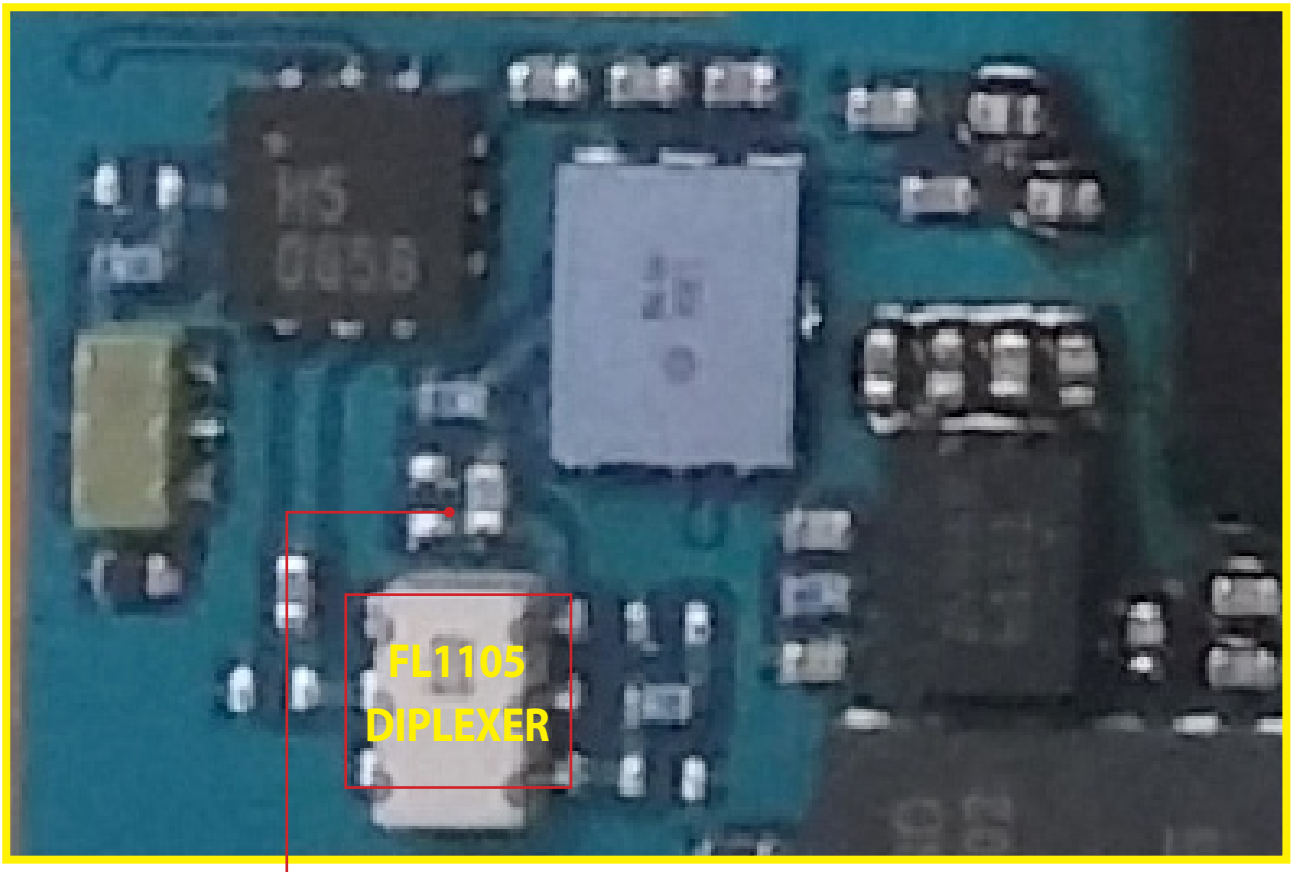

TP1 : L1614

3.1.1.4 Checking RF signal path (Diplexer)

Circuit Diagram

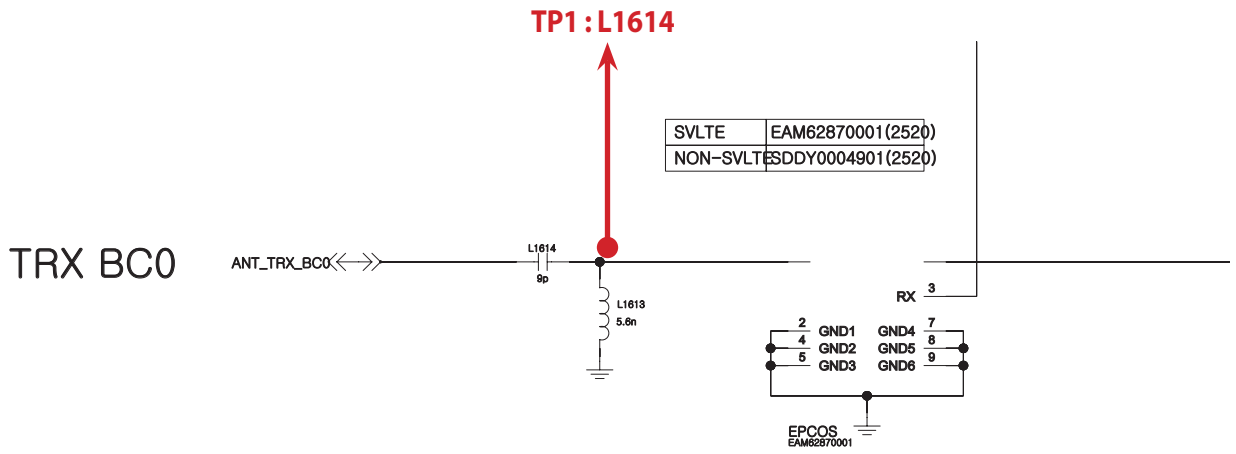

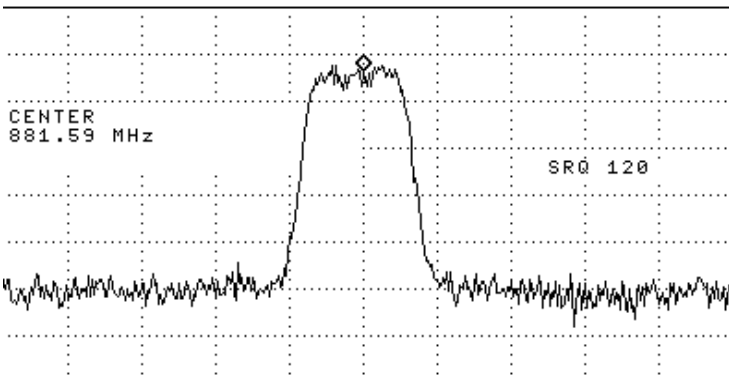

Figure 3.1.1 (C)

3.1.1.5 Checking RF signal path (DCN DUPLEXER)

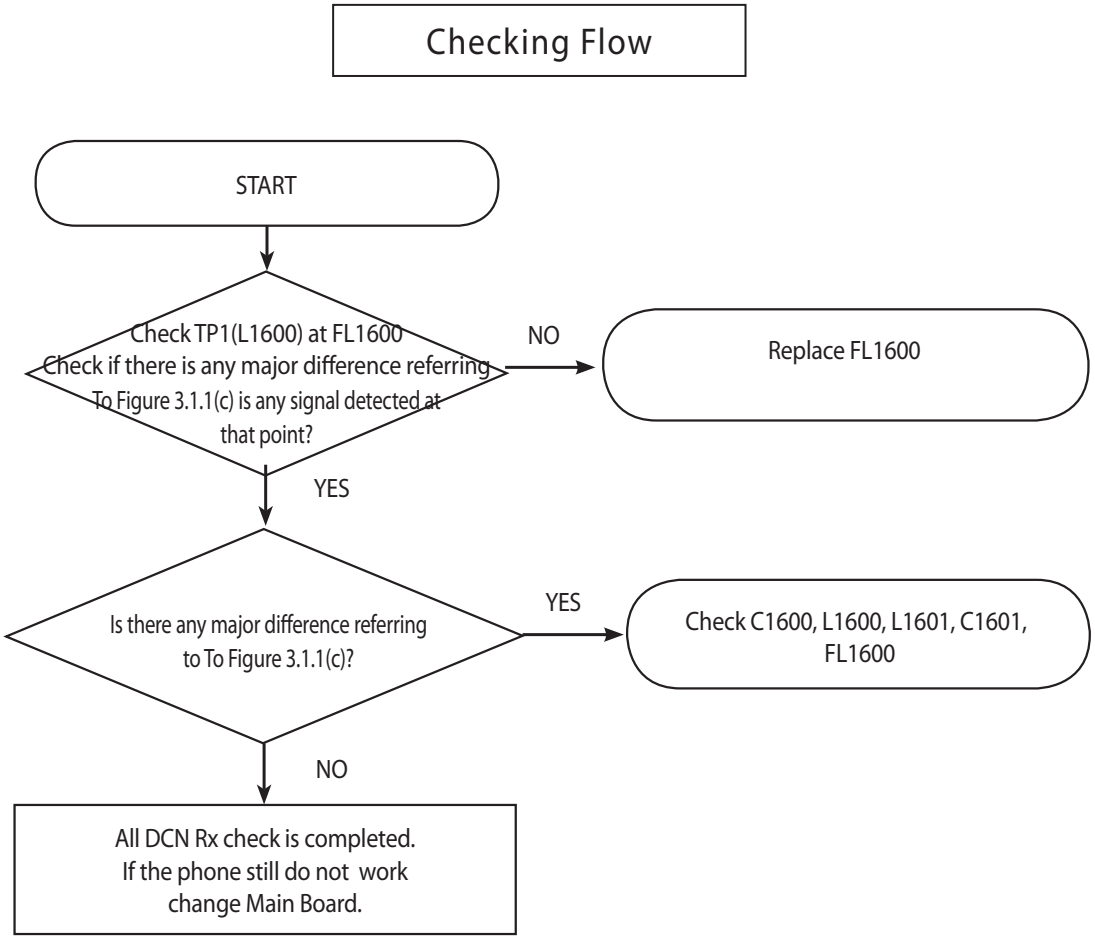

3.1.1.5 Checking RF signal path (DCN DUPLEXER)

Test Point

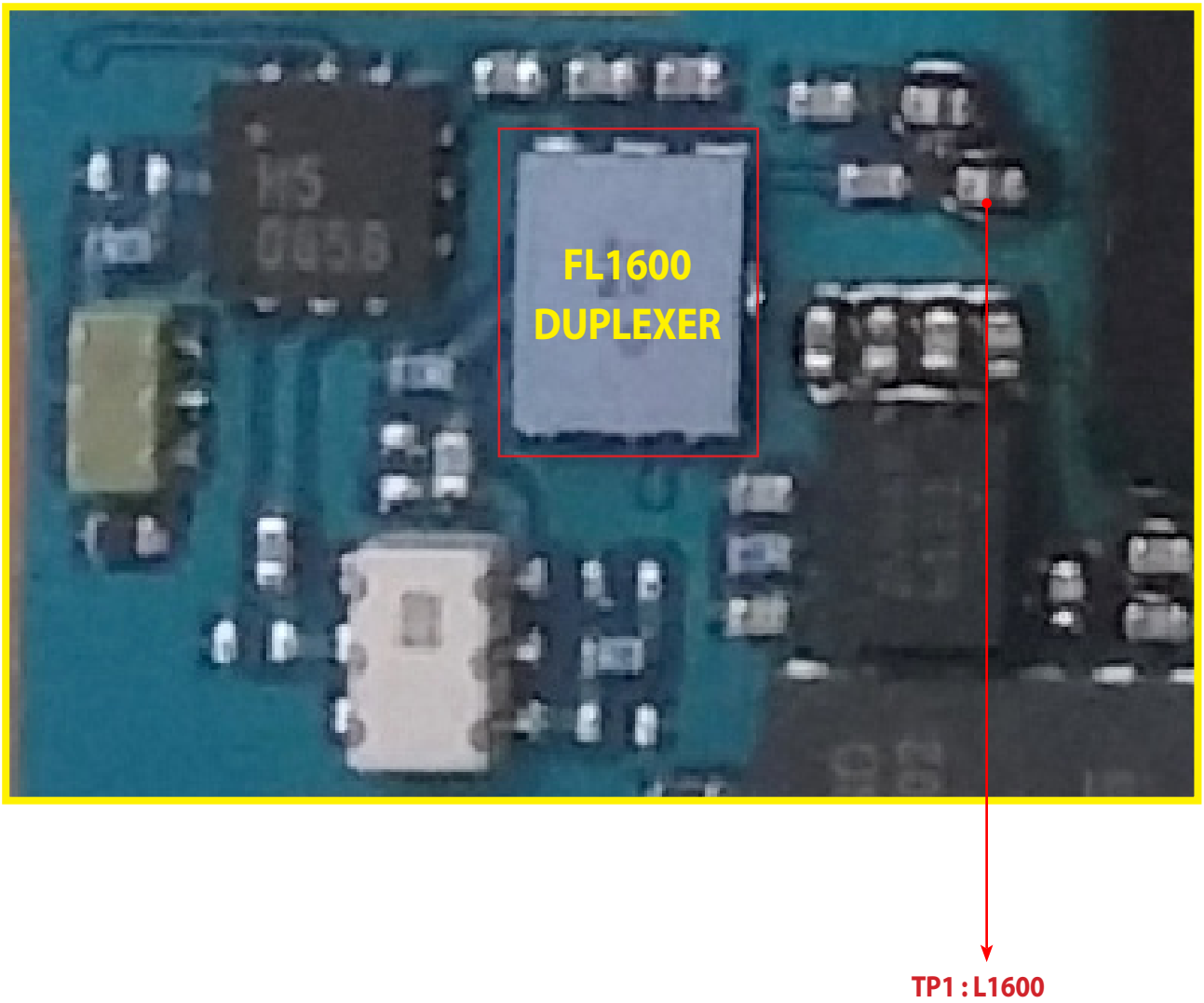

3.1.1.5 Checking RF signal path (DCN DUPLEXER)

Circuit Diagram

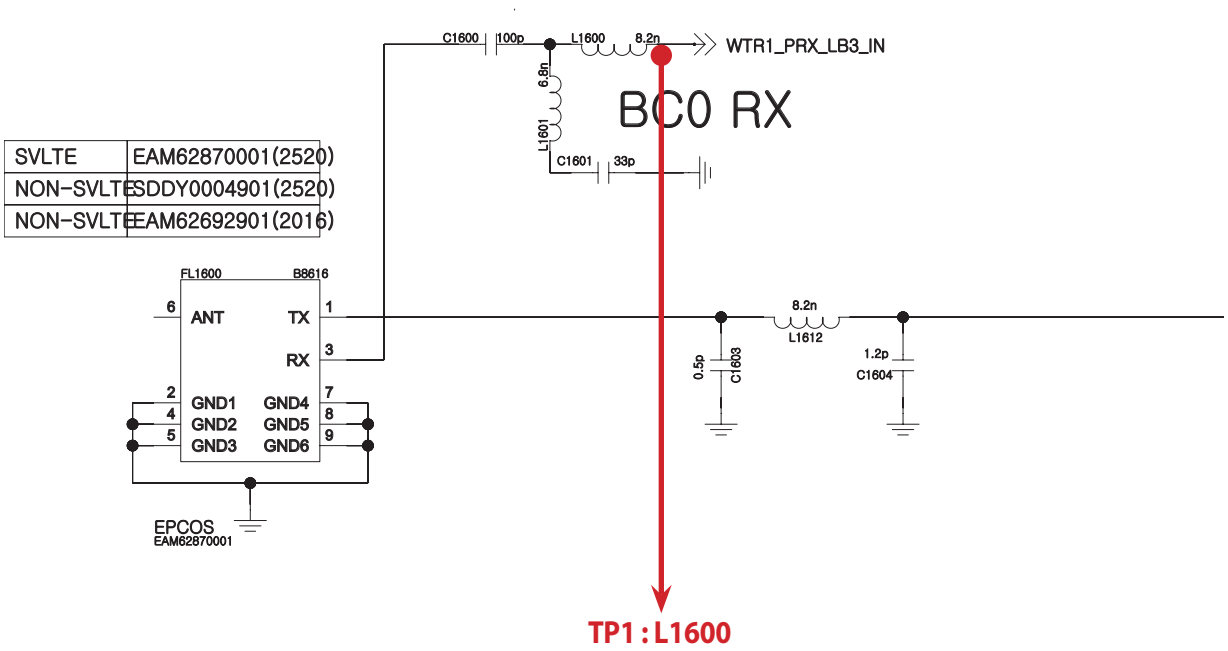

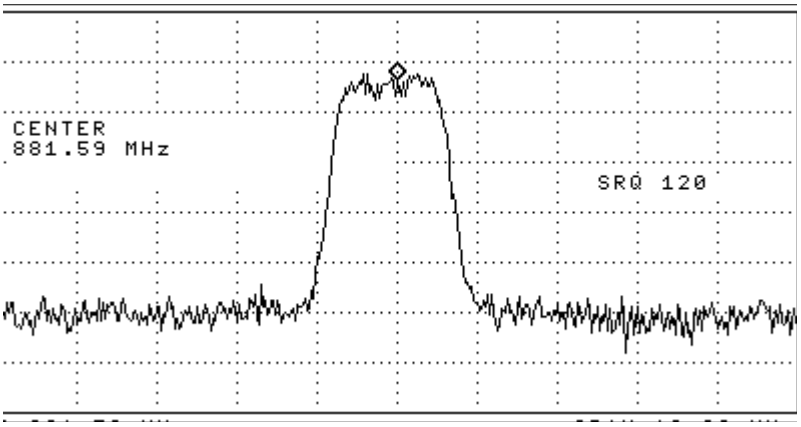

Figure 3.1.1 (D)

3.1.2 PCS 1X/DO Rx

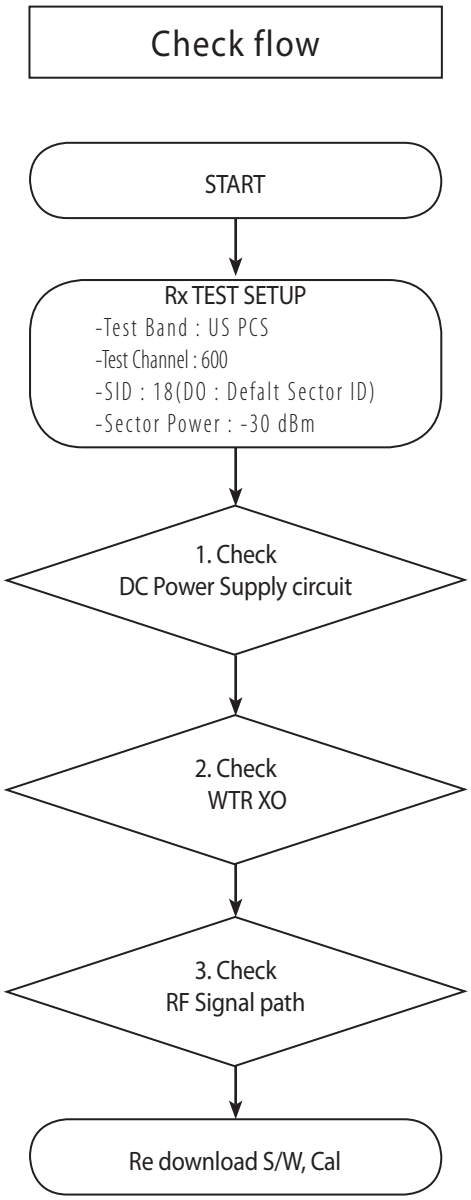

* there are no Test Points on the IQ Data Line. So It is impossible to check the IQ Data Wave form

3.1.2 PCS 1X/DO Rx

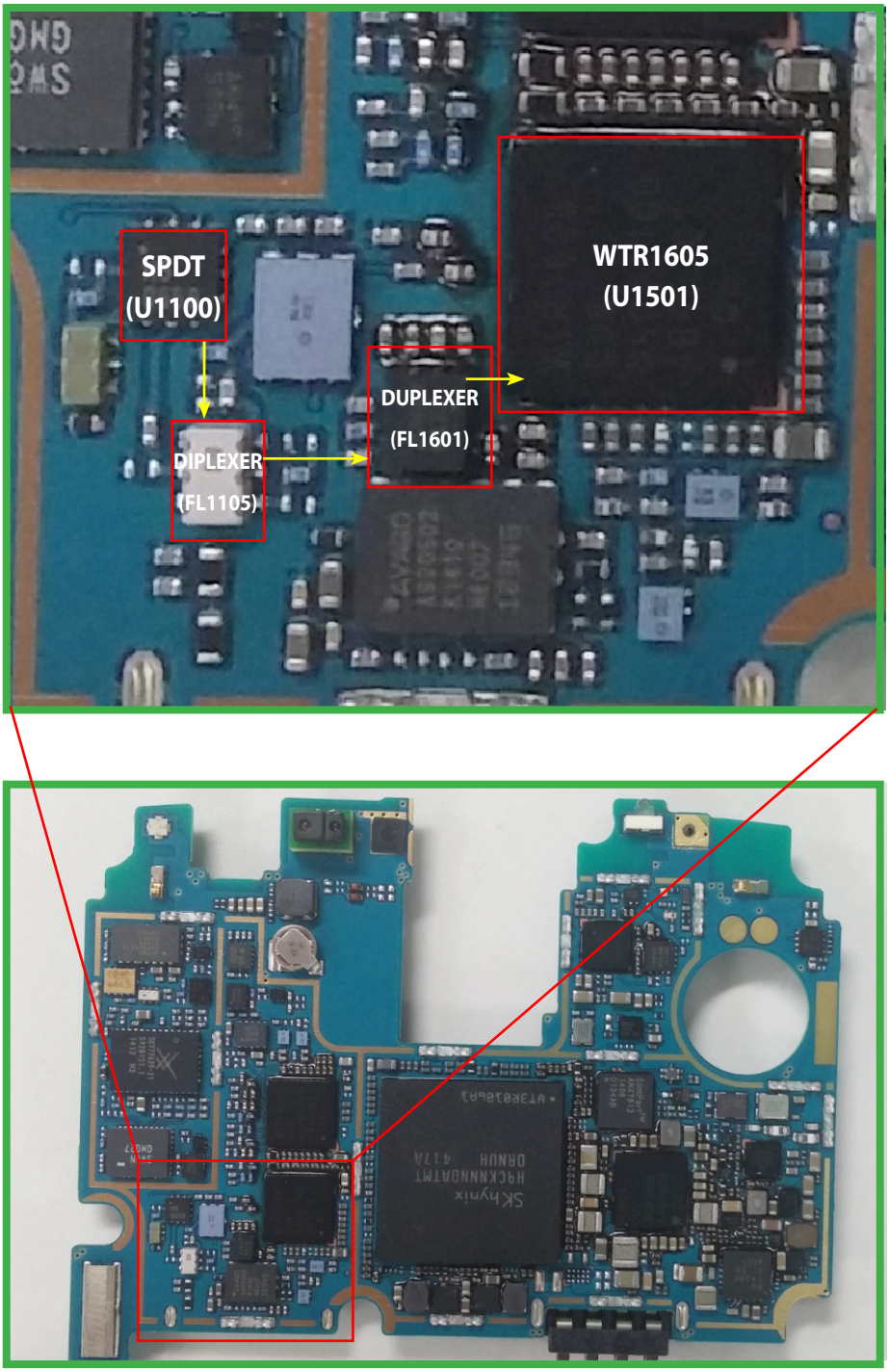

3.1.2.1 Checking DC Power supply circuit (+1.3V_VREG/ +2.05V_VREG / +1.8V_VREG)

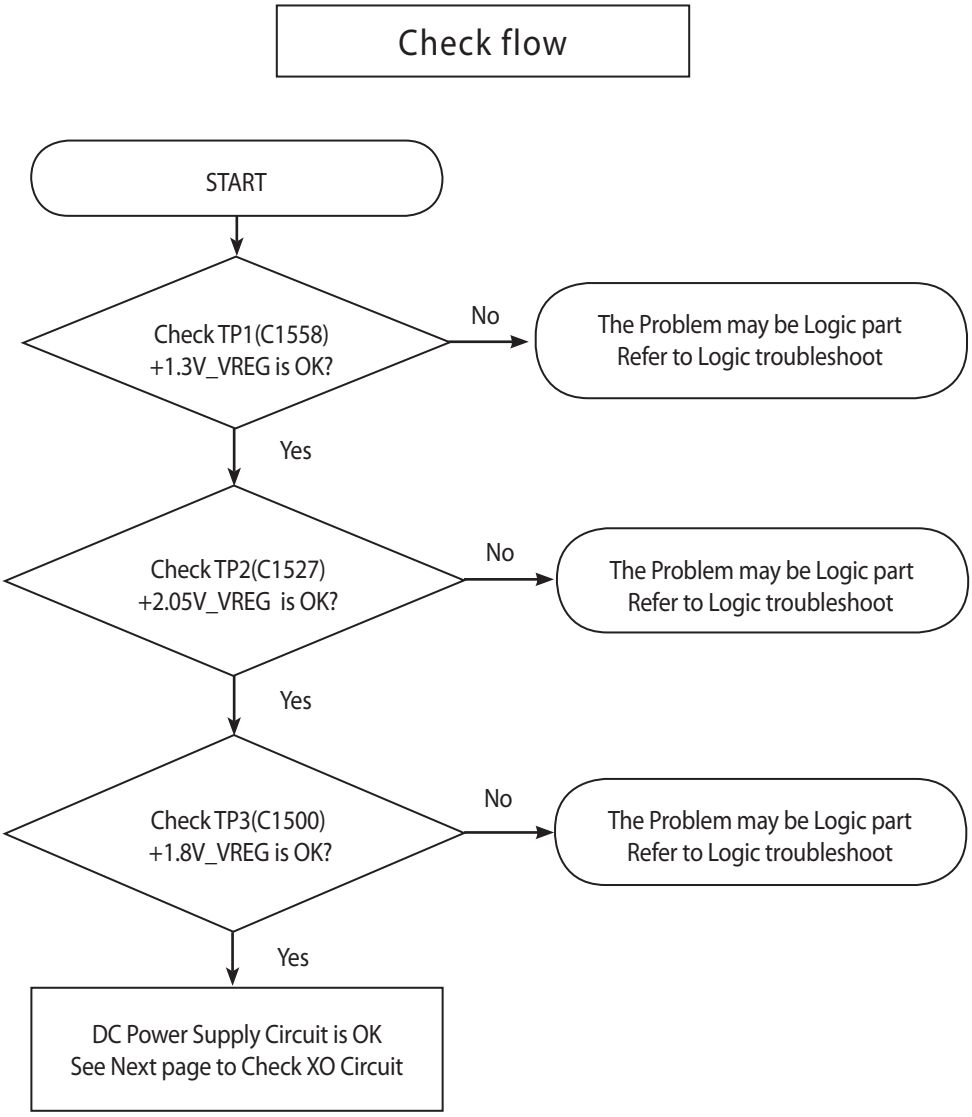

3.1.2.1 Checking DC Power supply circuit

Test Point

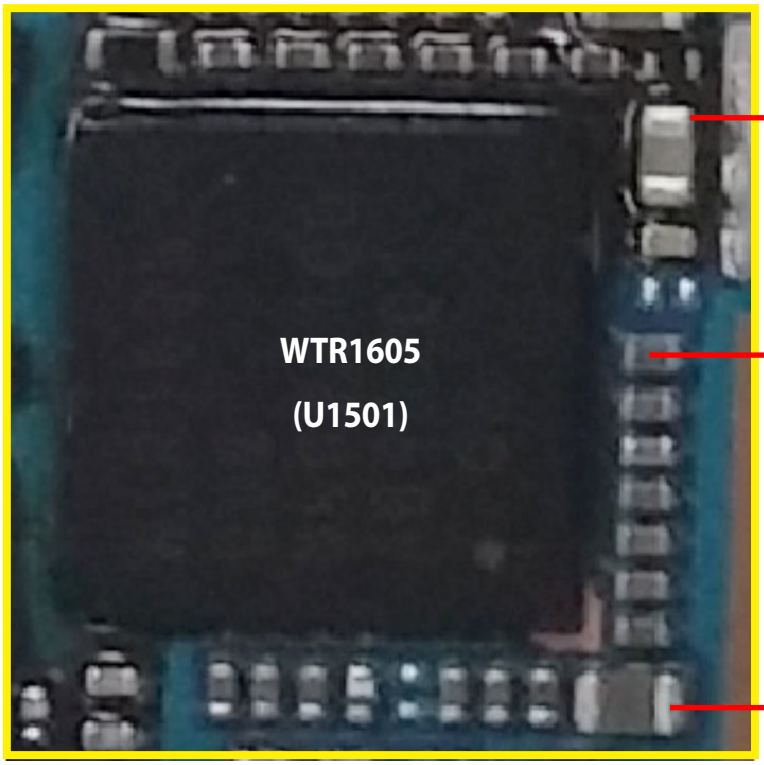

TP2 : C1527
(+2.05V_VREG)

TP3 : C1500
(+1.8V_VREG)

TP1 : C1558
(+1.3V_VREG)

Circuit Diagram

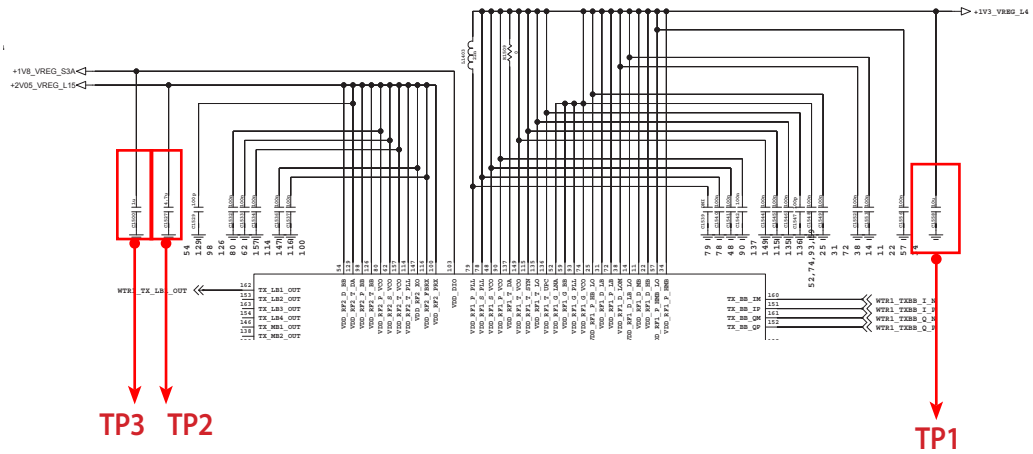

3.1.2.2 Checking WTR XO circuit

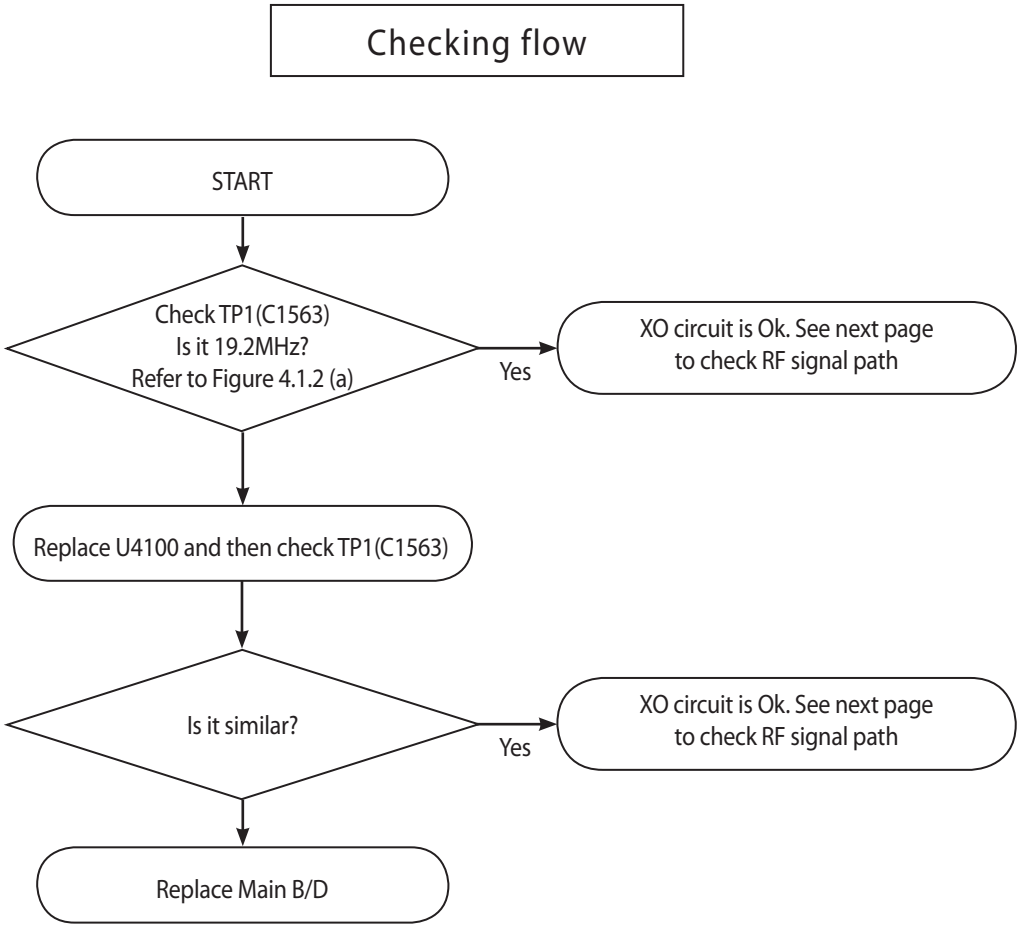

Waveform

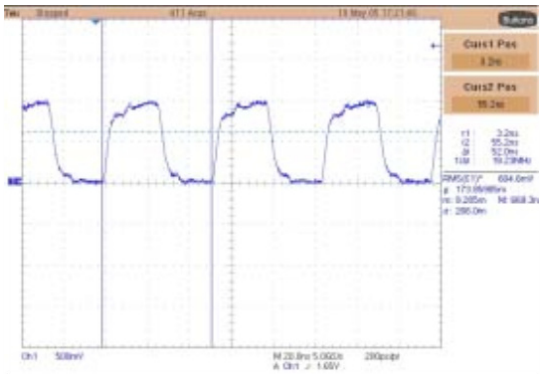

Figure 3.1.2(a)

3.1.2.2 Checking WTR XO circuit

Test Point

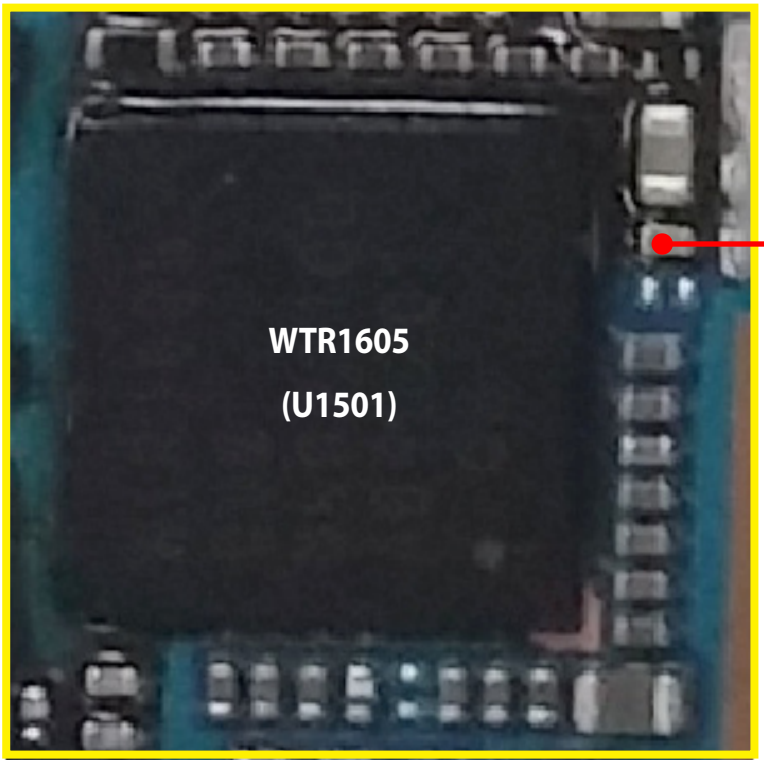

TP1 : C1563
(WTR0_XO_IN)

Bottom Side

Circuit Diagram

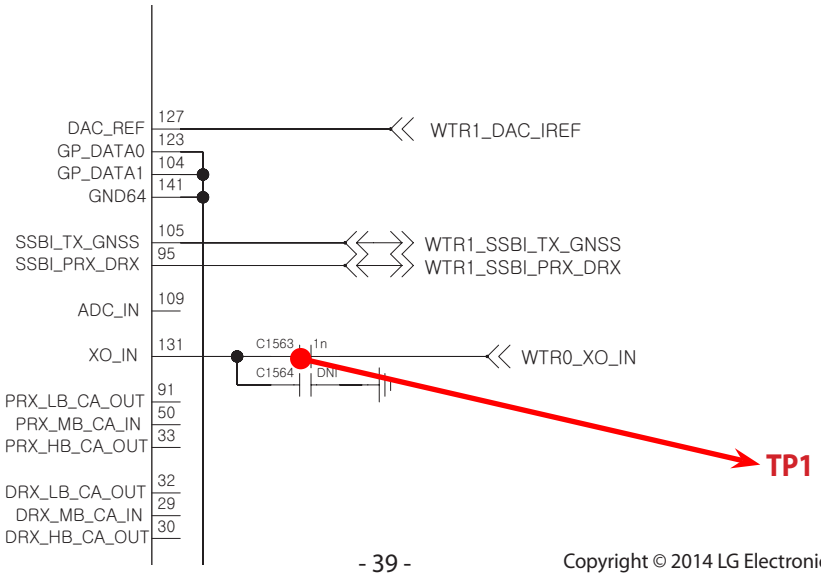

3.1.2.3 Checking RF signal path (DIPLEXER)

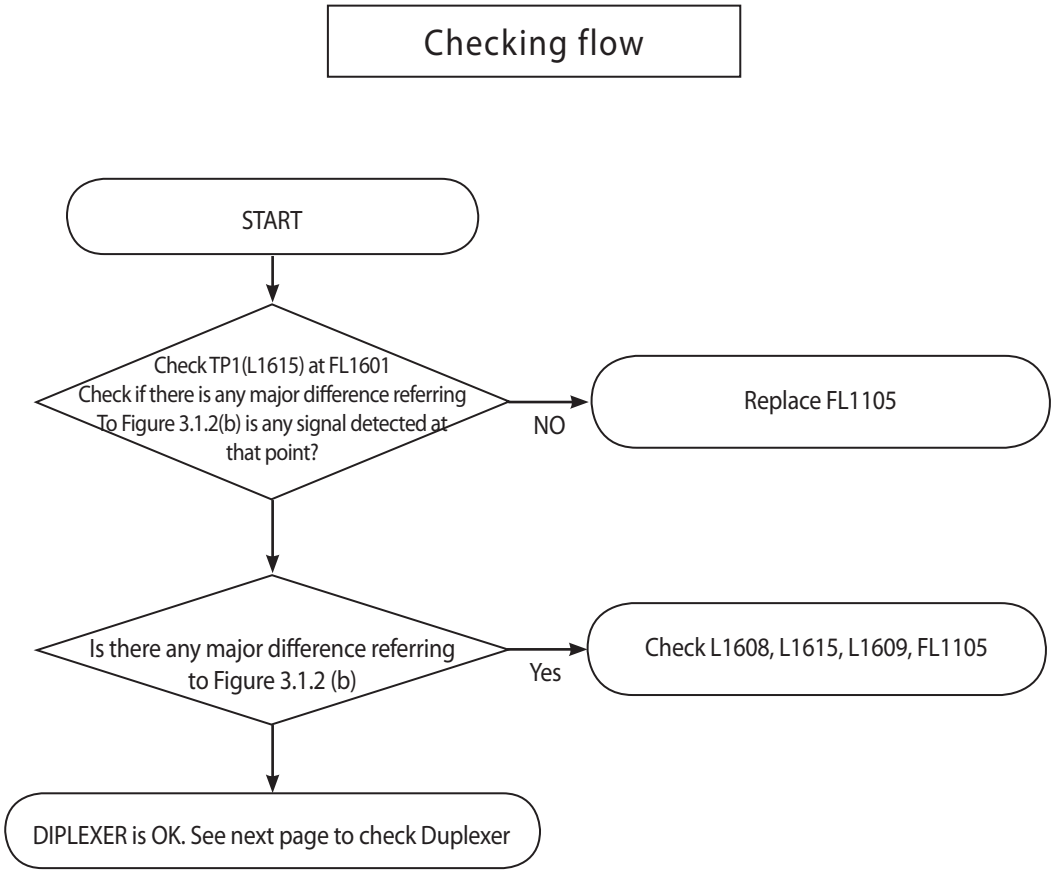

3.1.2.3 Checking RF signal path (DIPLEXER)

Test Point

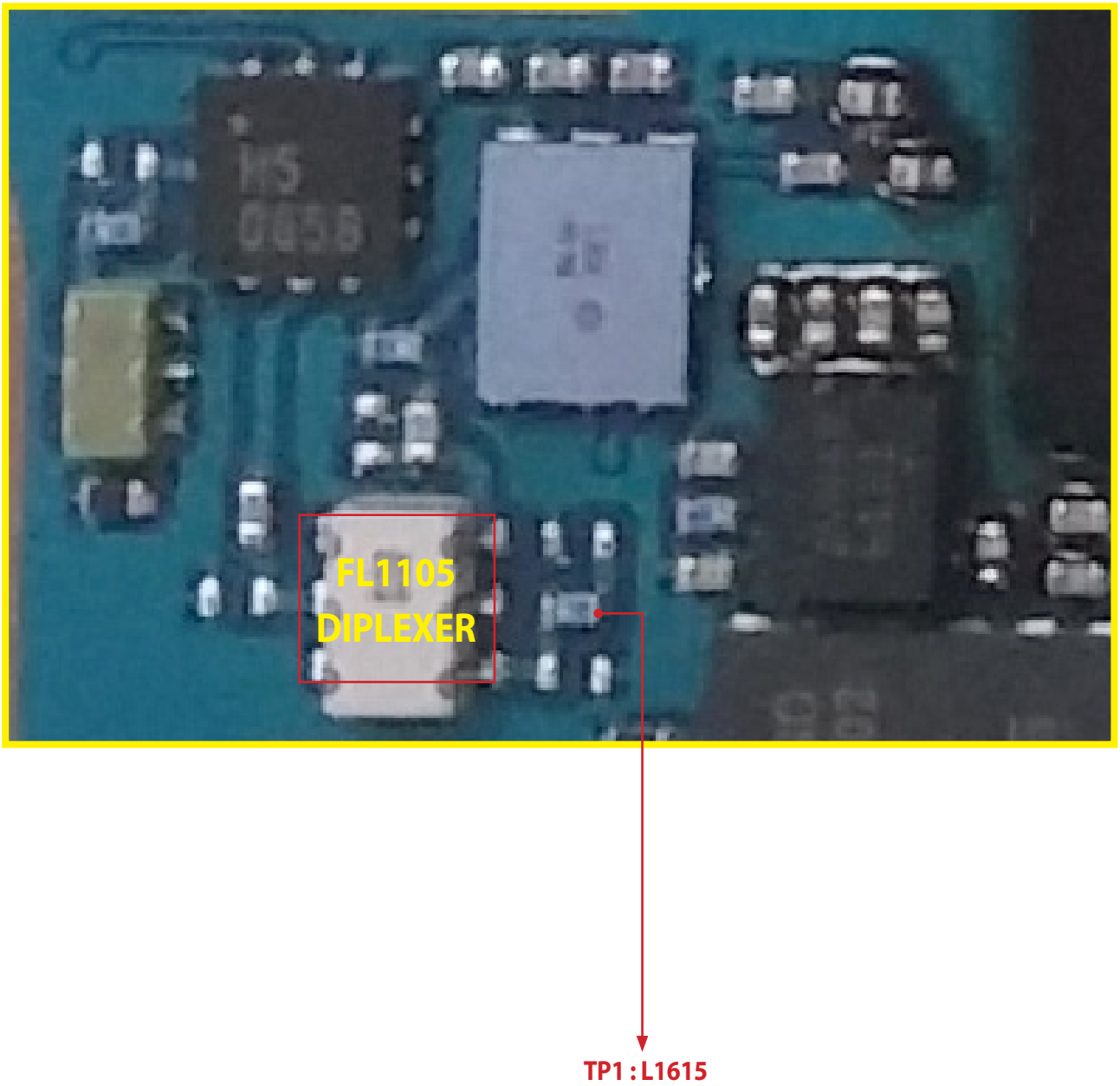

3.1.2.3 Checking RF signal path (DIPLEXER)

Circuit Diagram

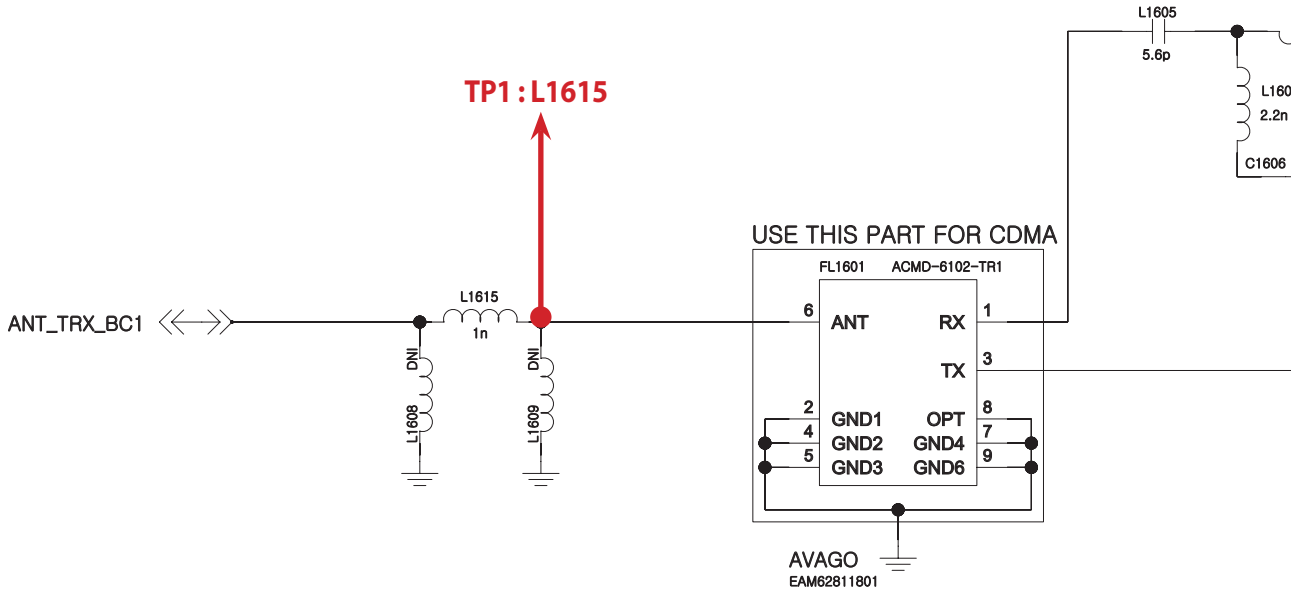

Waveform

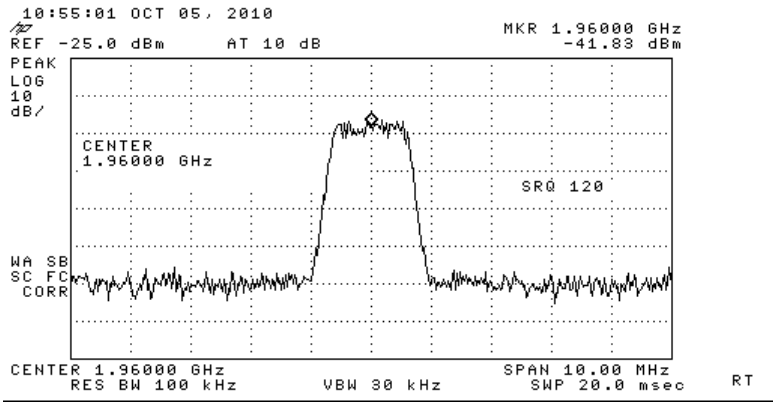

Figure 3.1.2 (B)

3.1.2.4 Checking RF signal path (PCS DUPLEXER)

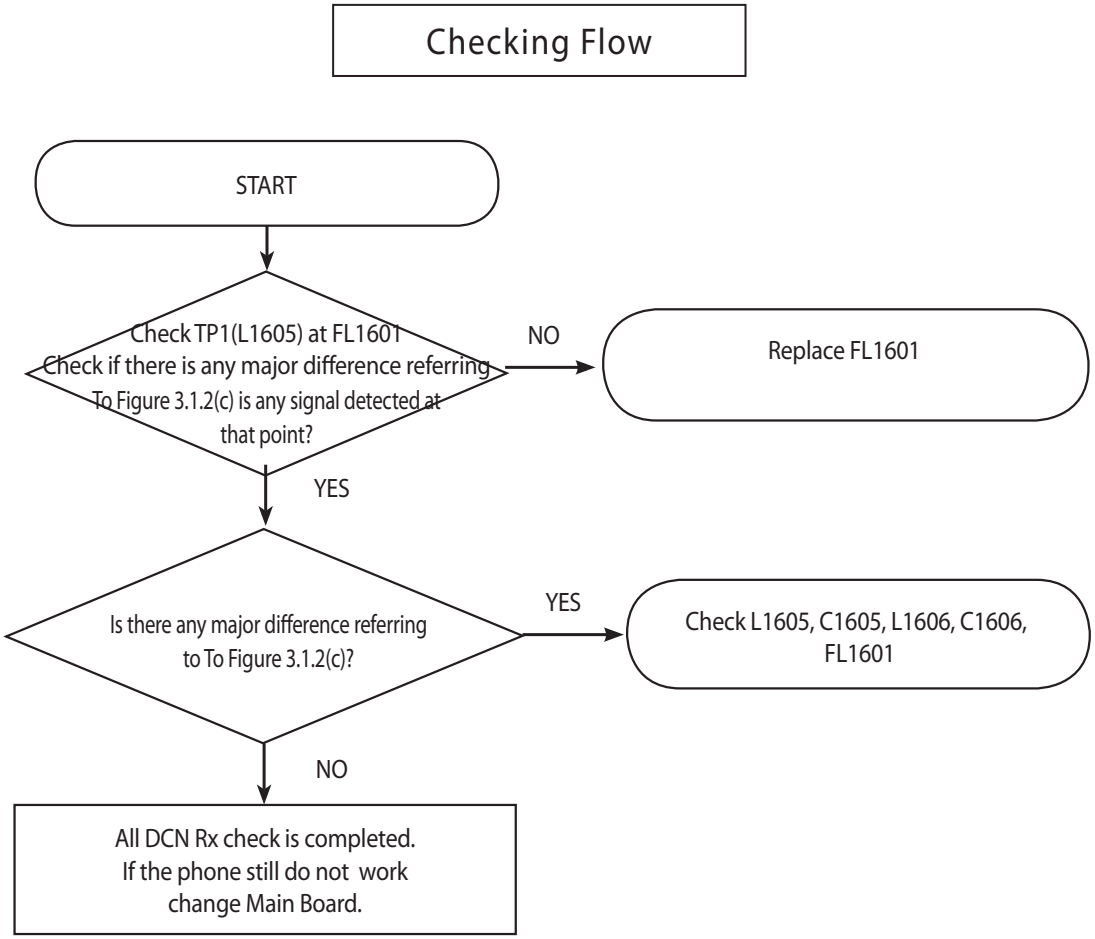

3.1.2.5 Checking RF signal path (DCN DUPLEXER)

Test Point

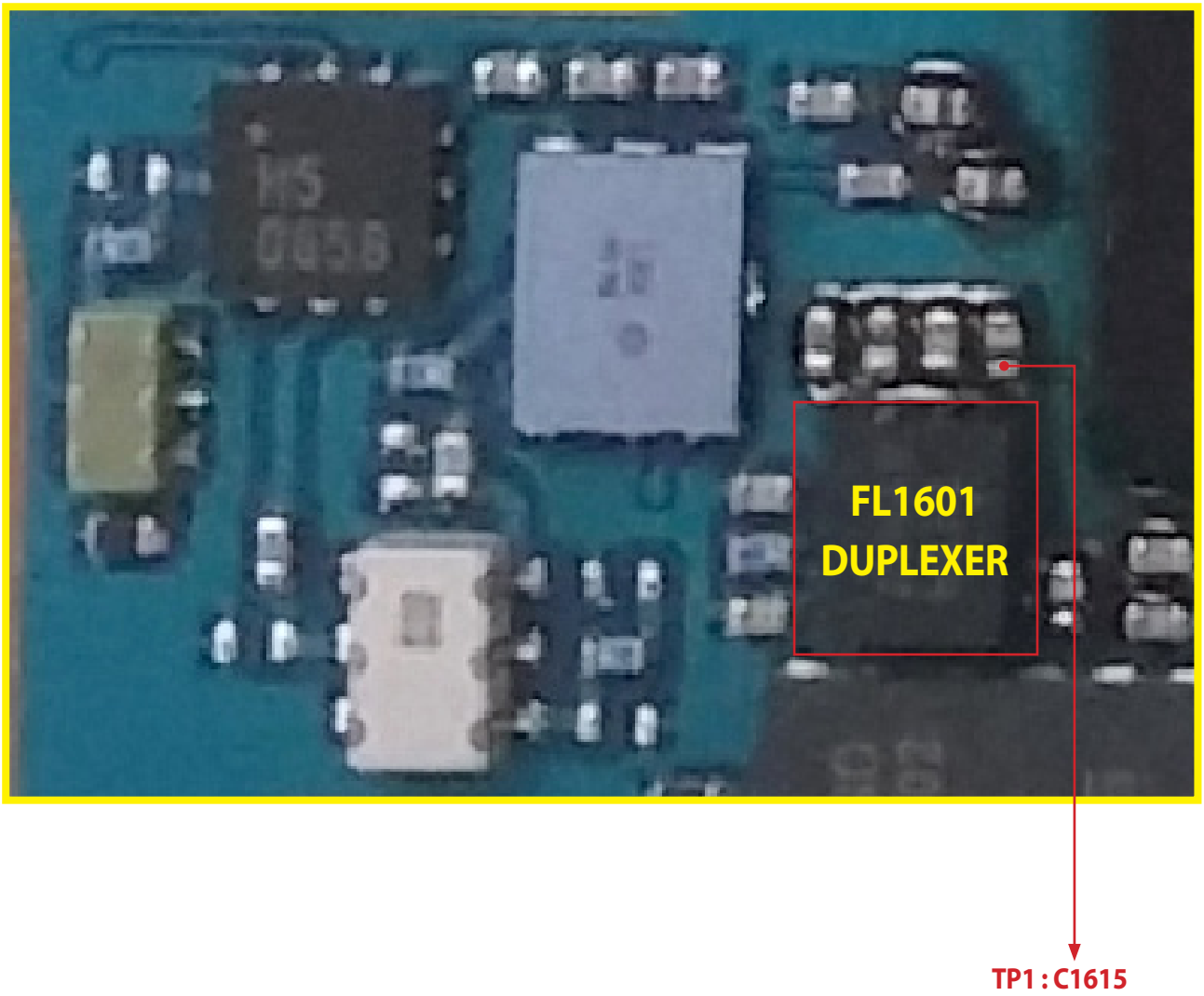

3.1.2.5 Checking RF signal path (DCN DUPLEXER)

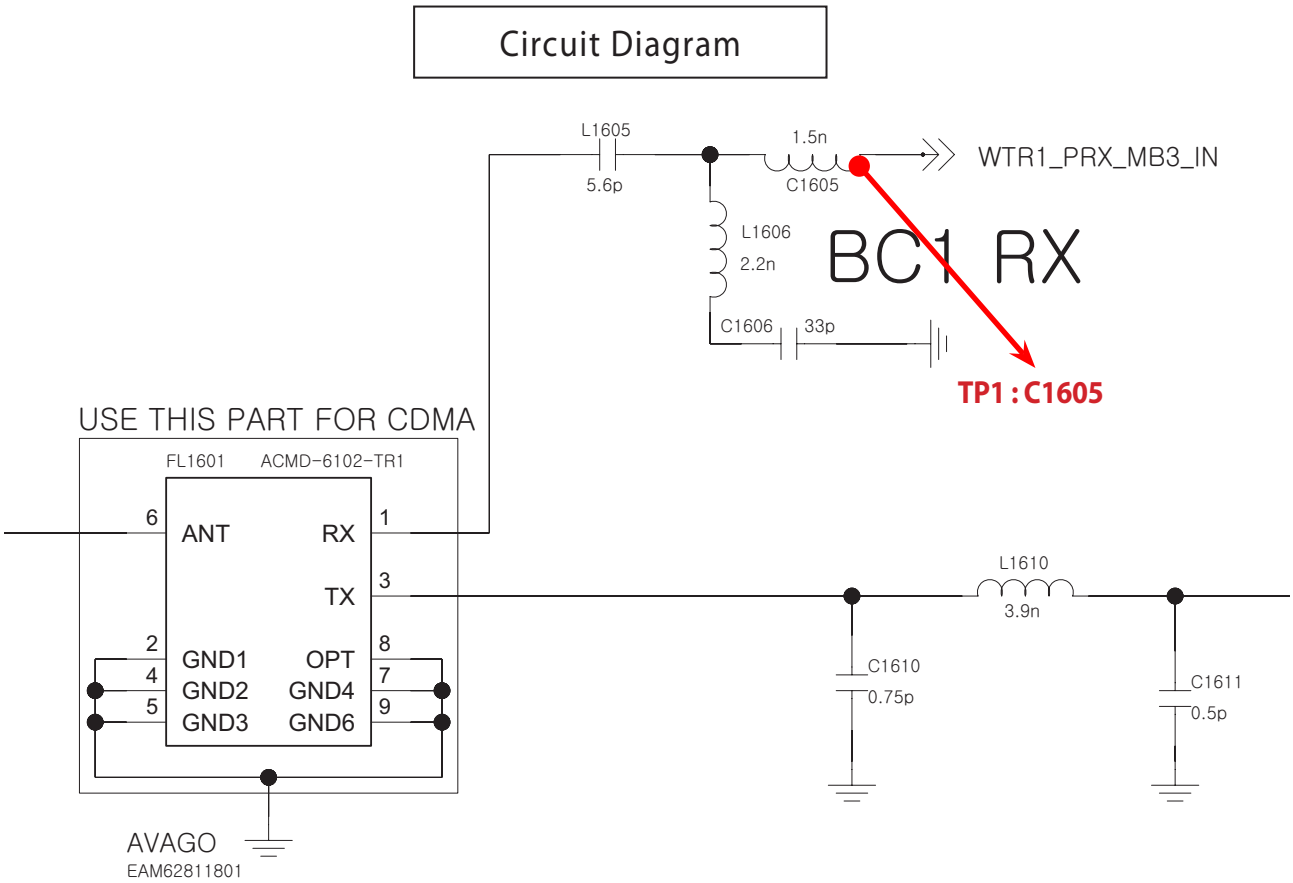

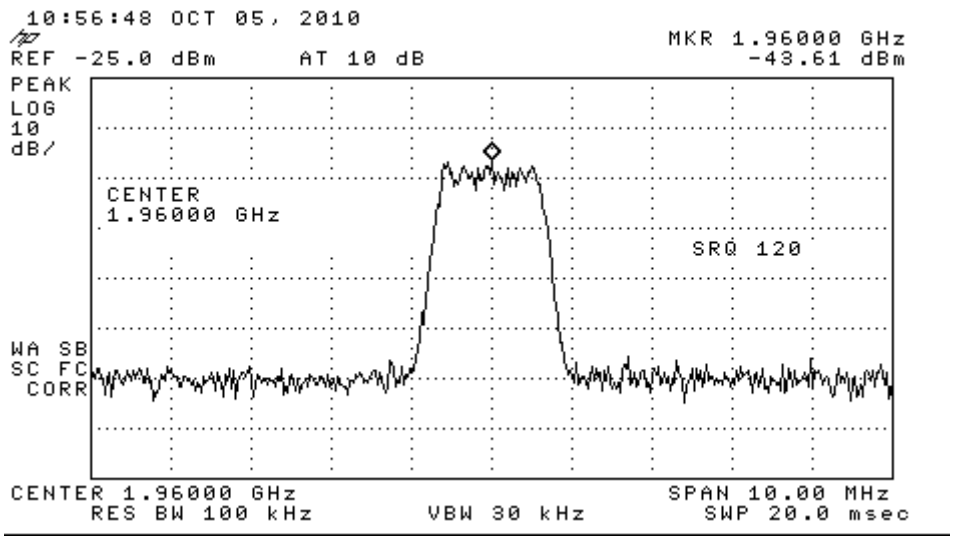

Figure 3.1.2 (C)

3.1.3 DCN 1X/DO Tx

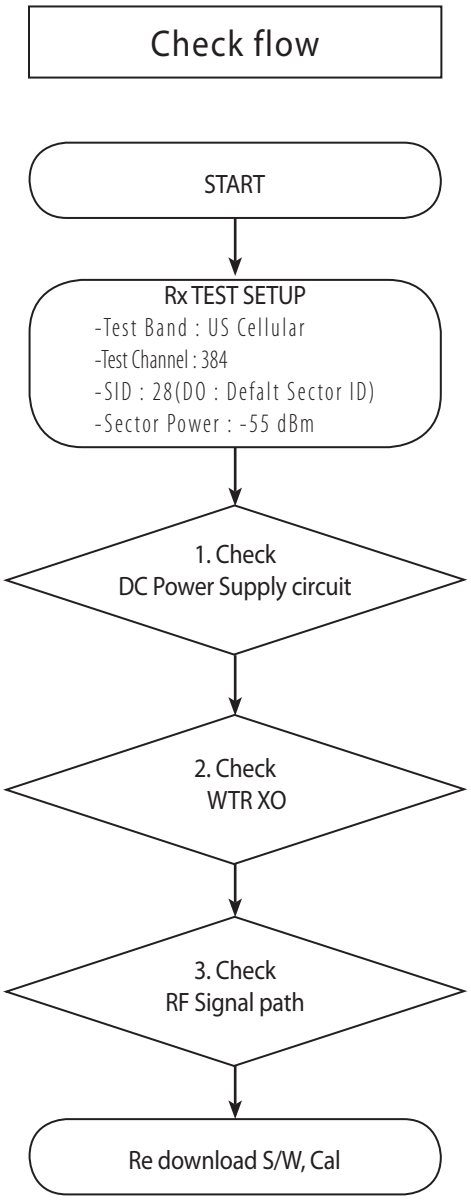

* there are no Test Points on the IQ Data Line. So It is impossible to check the IQ Data Wave form

3.1.3 DCN 1X/DO Tx

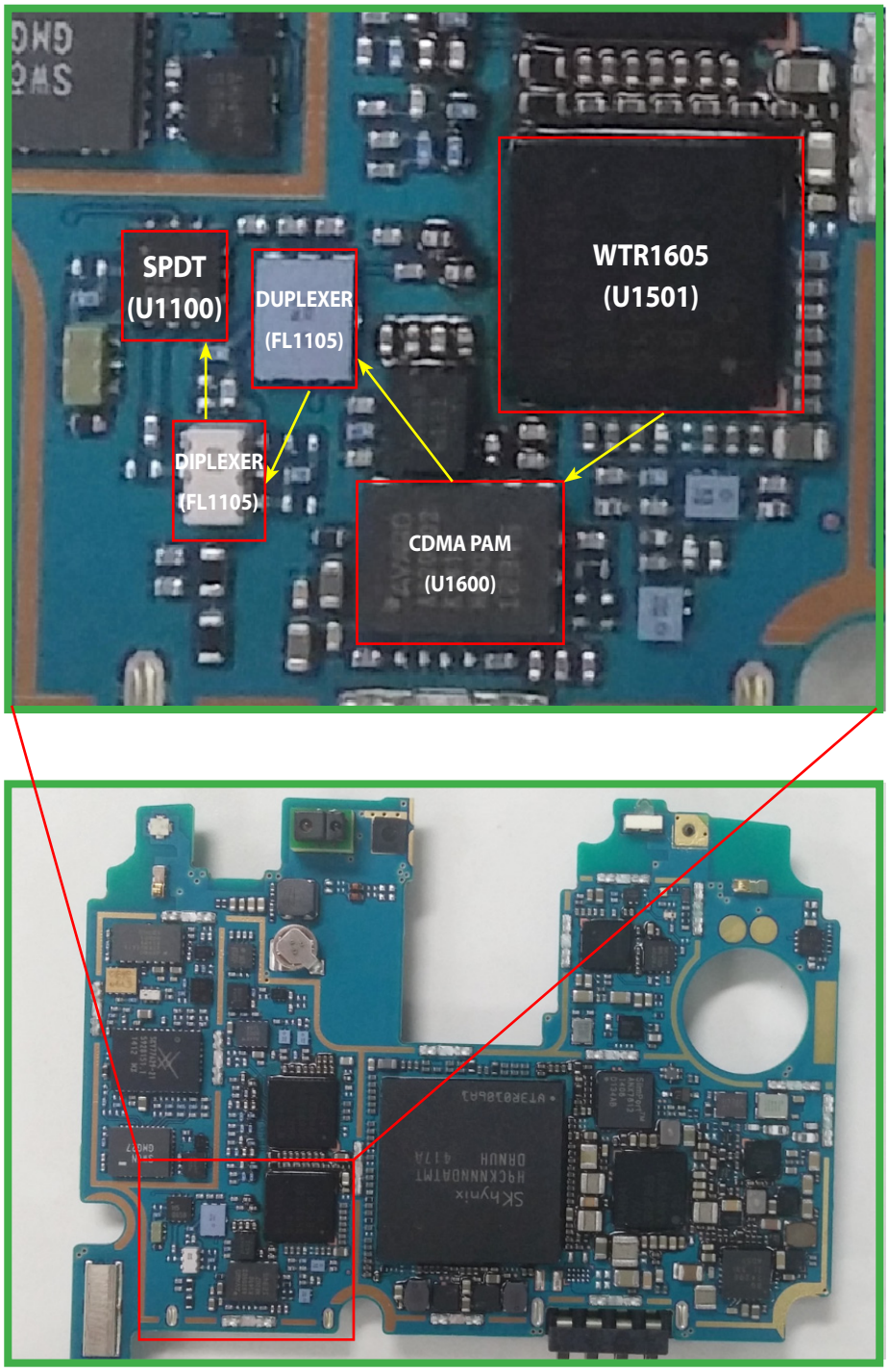

3.1.3.1 Checking DC Power supply circuit (+1.3V_VREG/ +2.05V_VREG/ +1.8V_VREG)

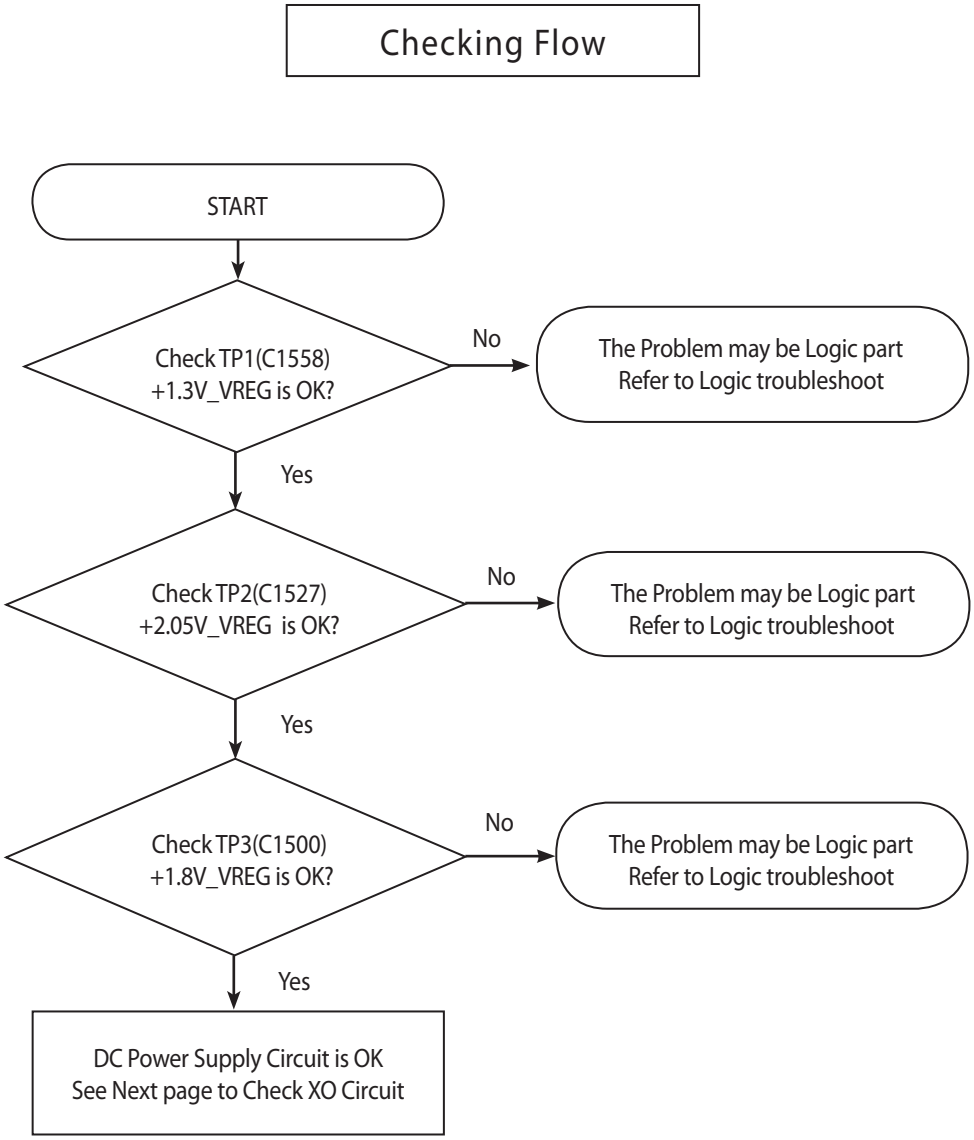

Test Point

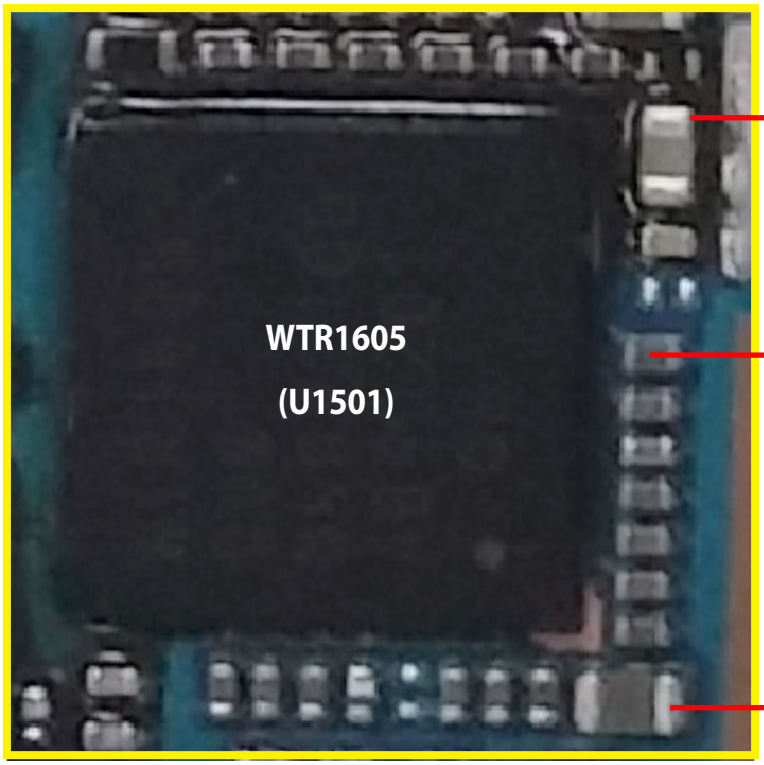

TP2 : C1527
(+2.05V_VREG)

TP3 : C1500
(+1.8V_VREG)

TP1 : C1558
(+1.3V_VREG)

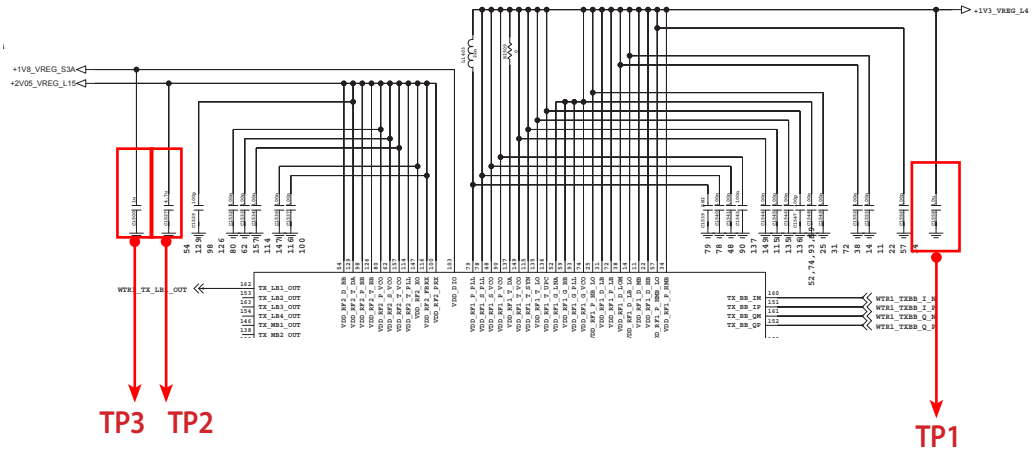

3.1.3.2 Checking WTR XO circuit

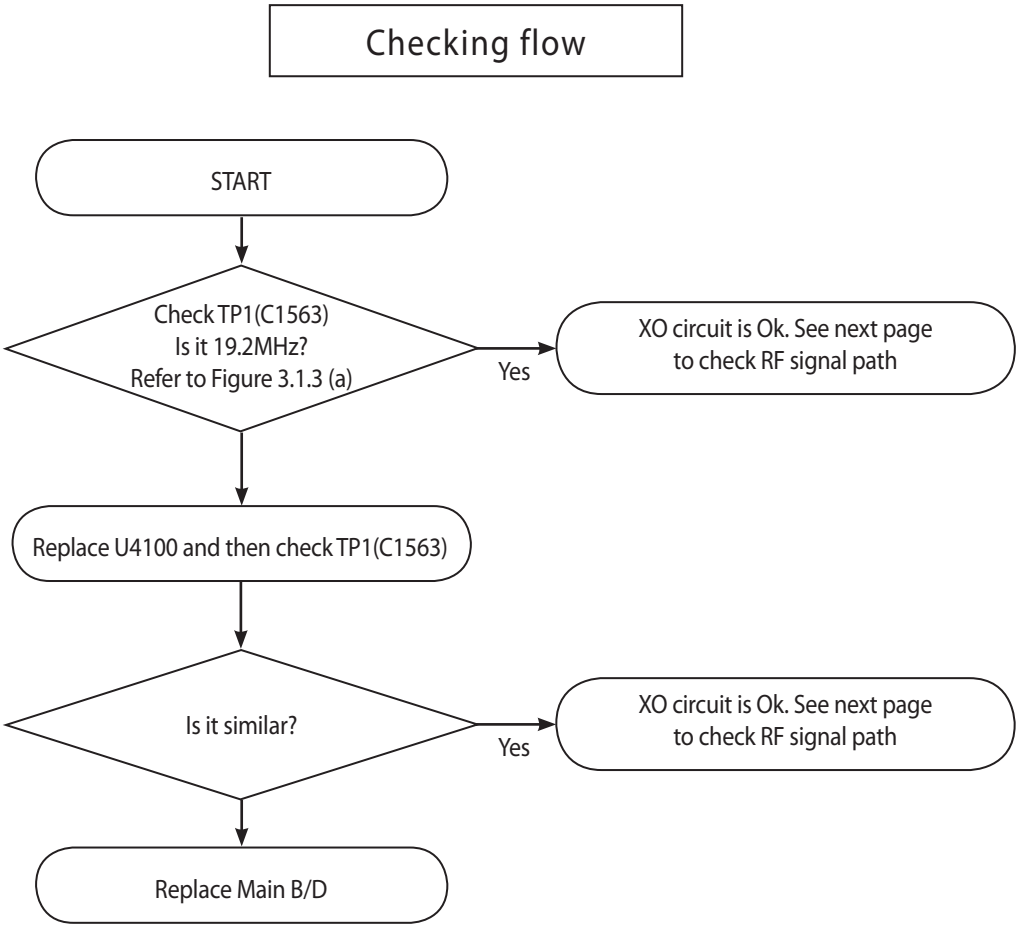

Waveform

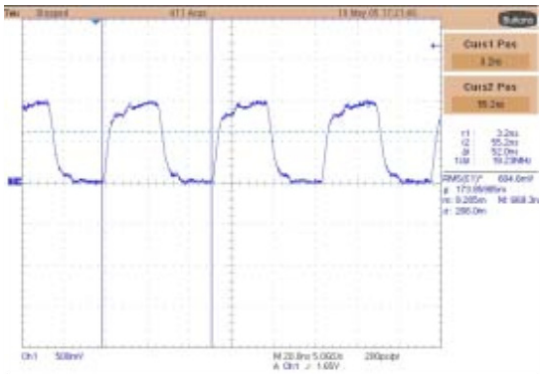

Figure 3.1.3(a)

3.1.3.2 Checking WTR XO circuit

Test Point

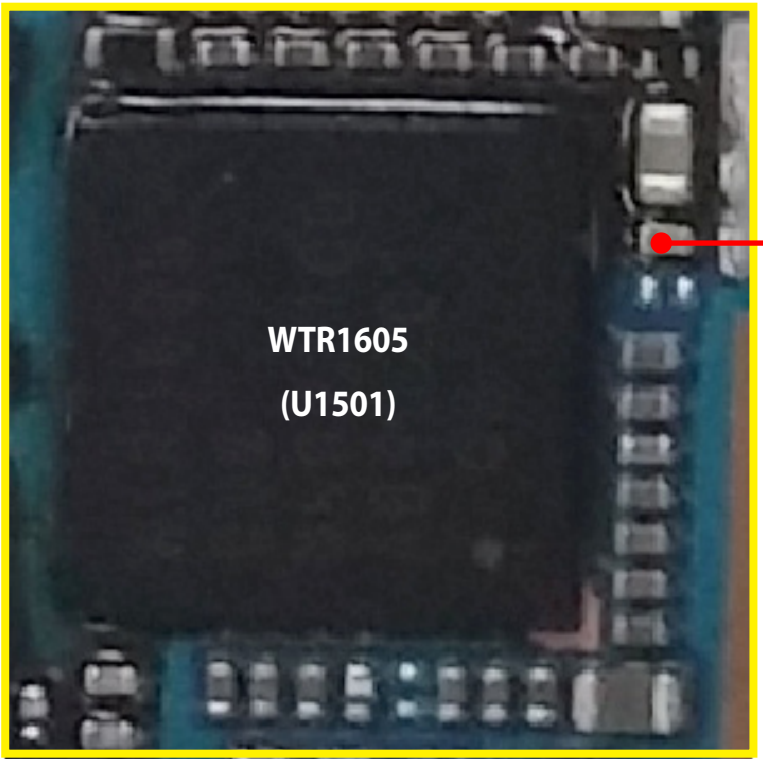

TP1 : C1563
(WTR0_XO_IN)

Bottom Side

Circuit Diagram

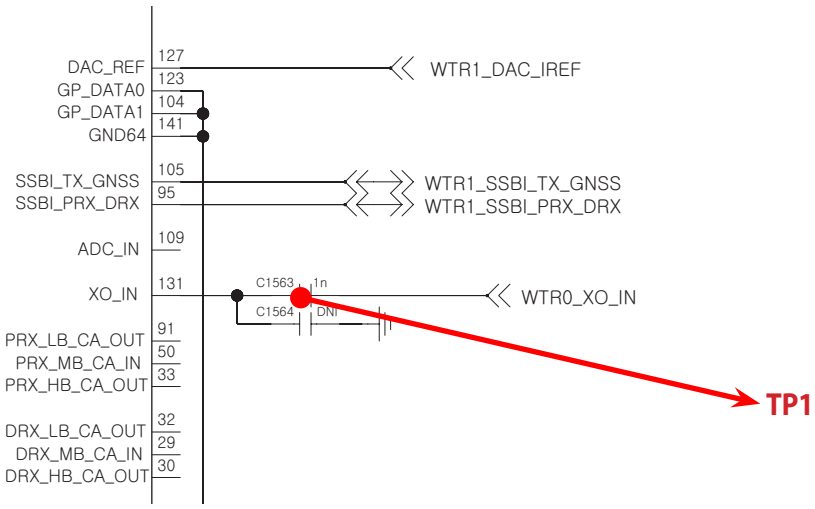

3.1.3.3 Checking RF signal path (Duplexer, Diplexer)

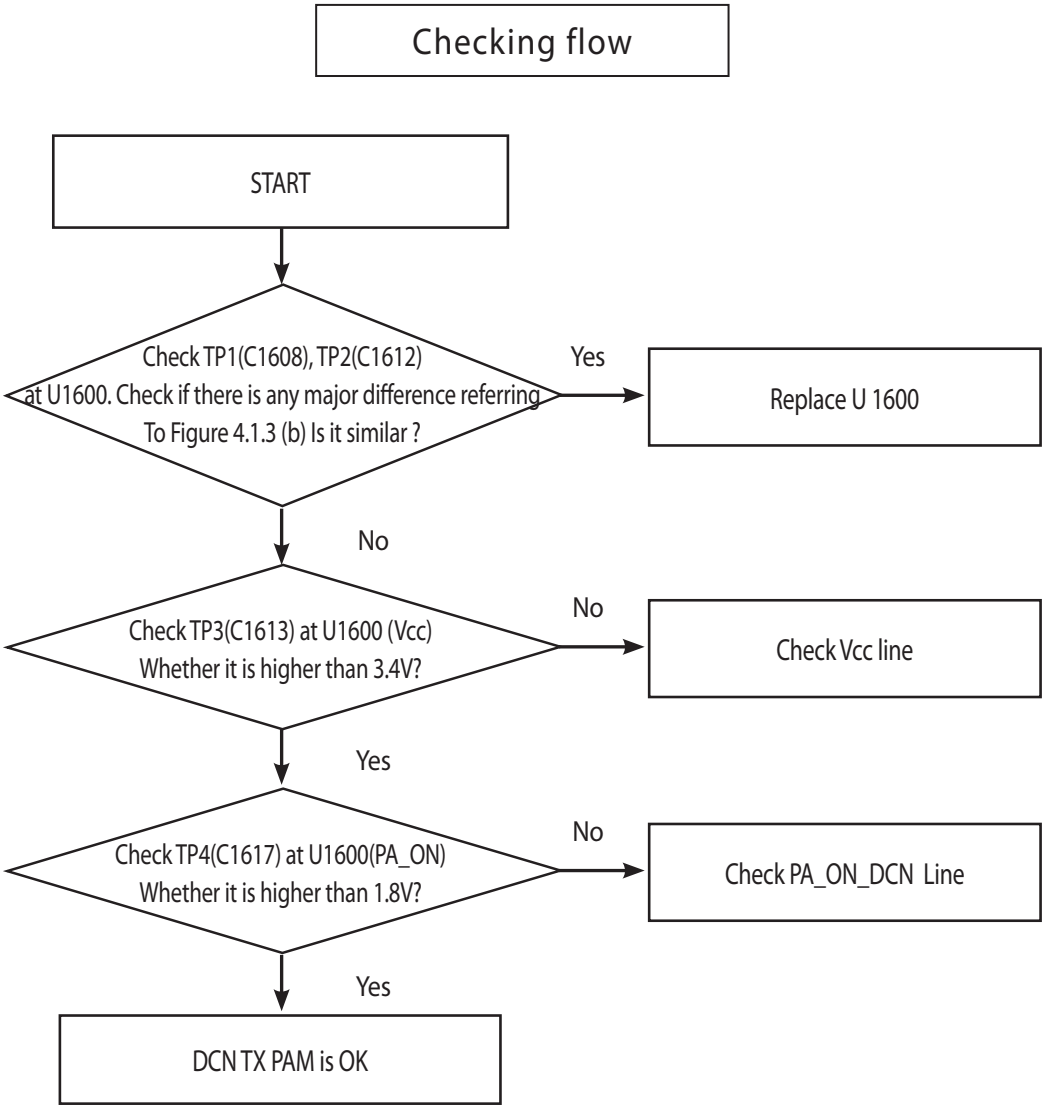

3.1.3.3 Checking RF signal path (PAM)

Test Point

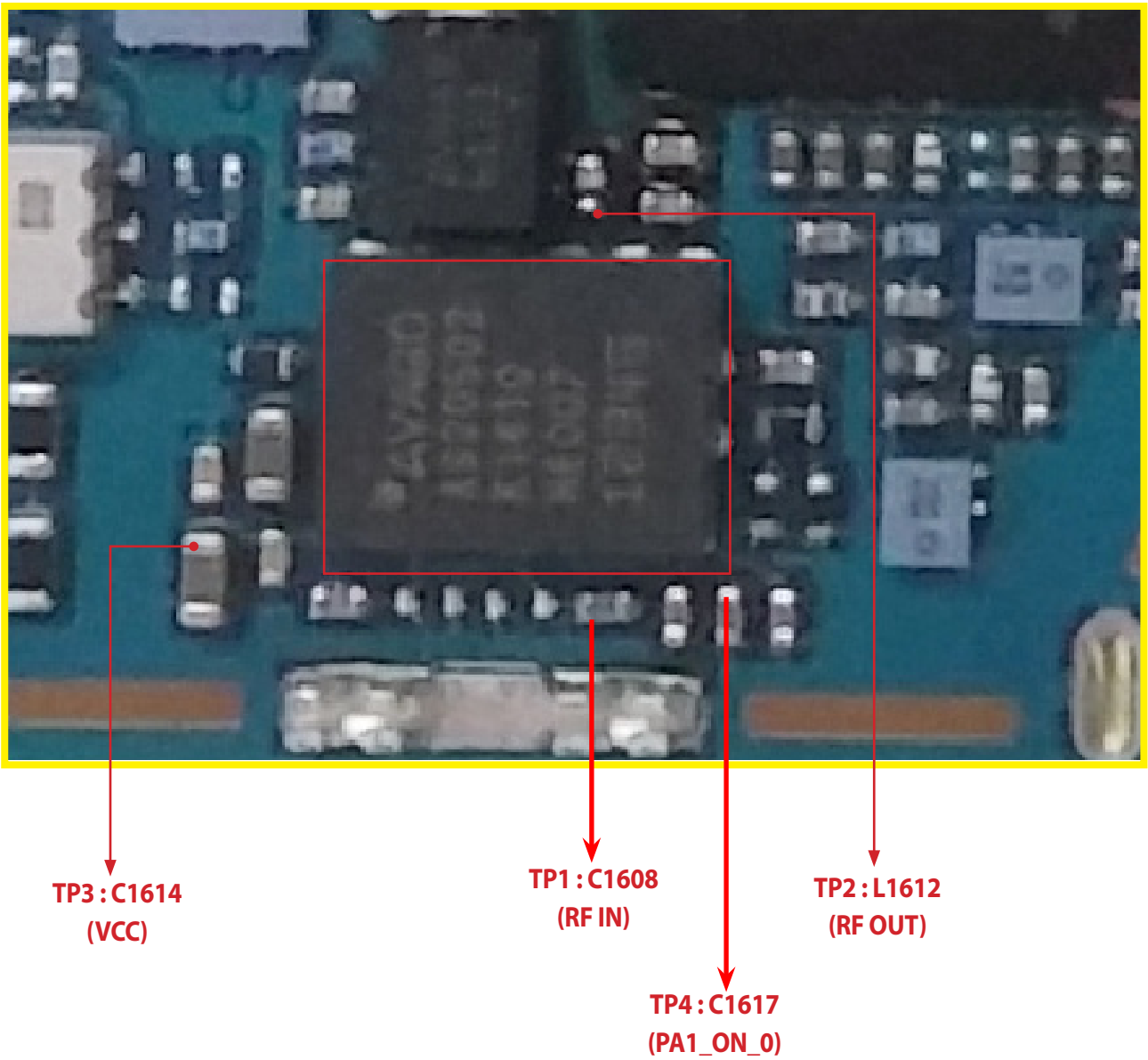

3.1.3.3 Checking RF signal path (PAM)

Circuit Diagram

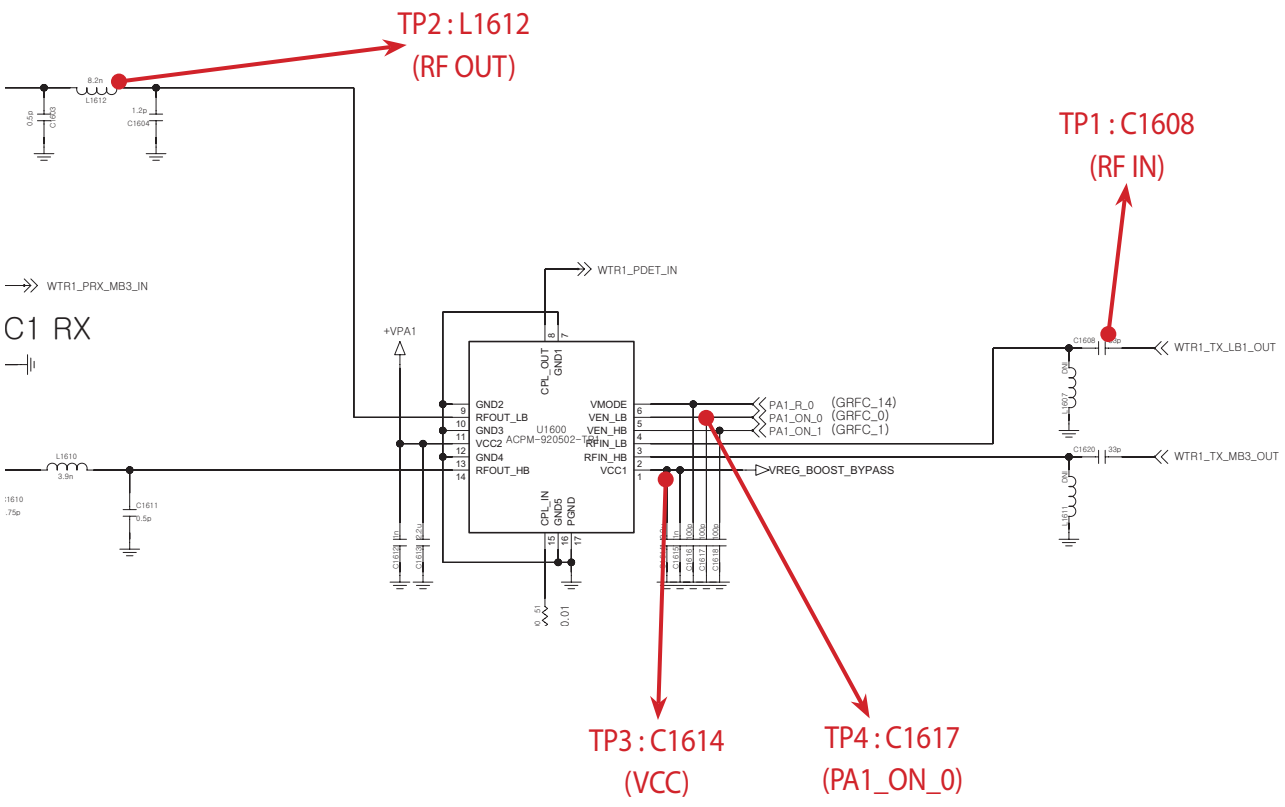

Waveform

TP1

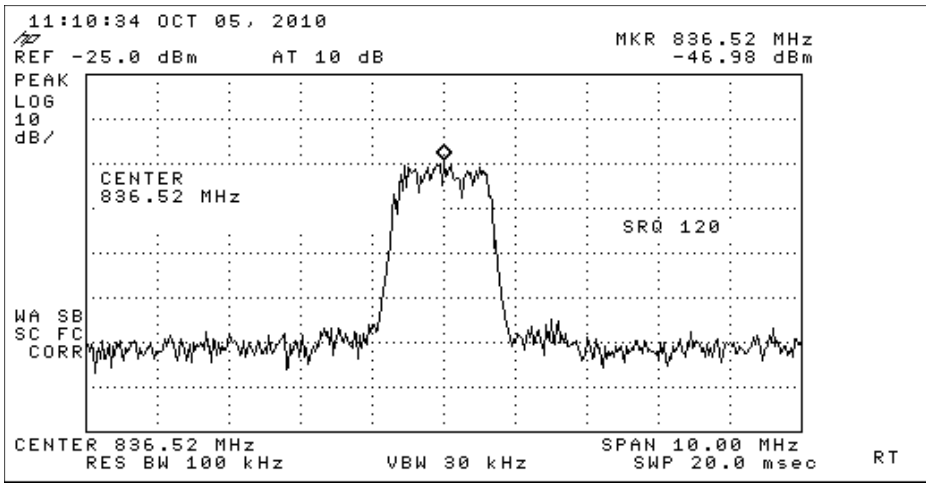

TP2

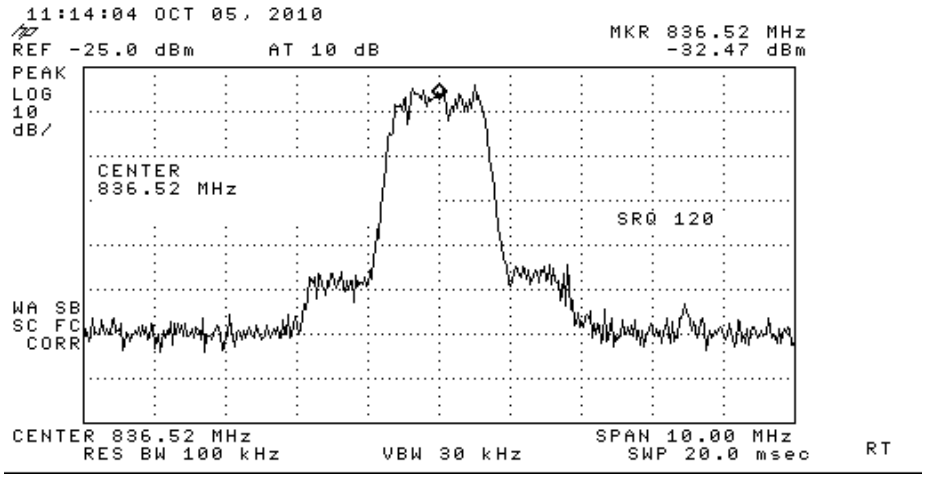

Figure 3.1.3 (b)

3.1.3.4 Checking RF signal path (DCN DUPLEXER)

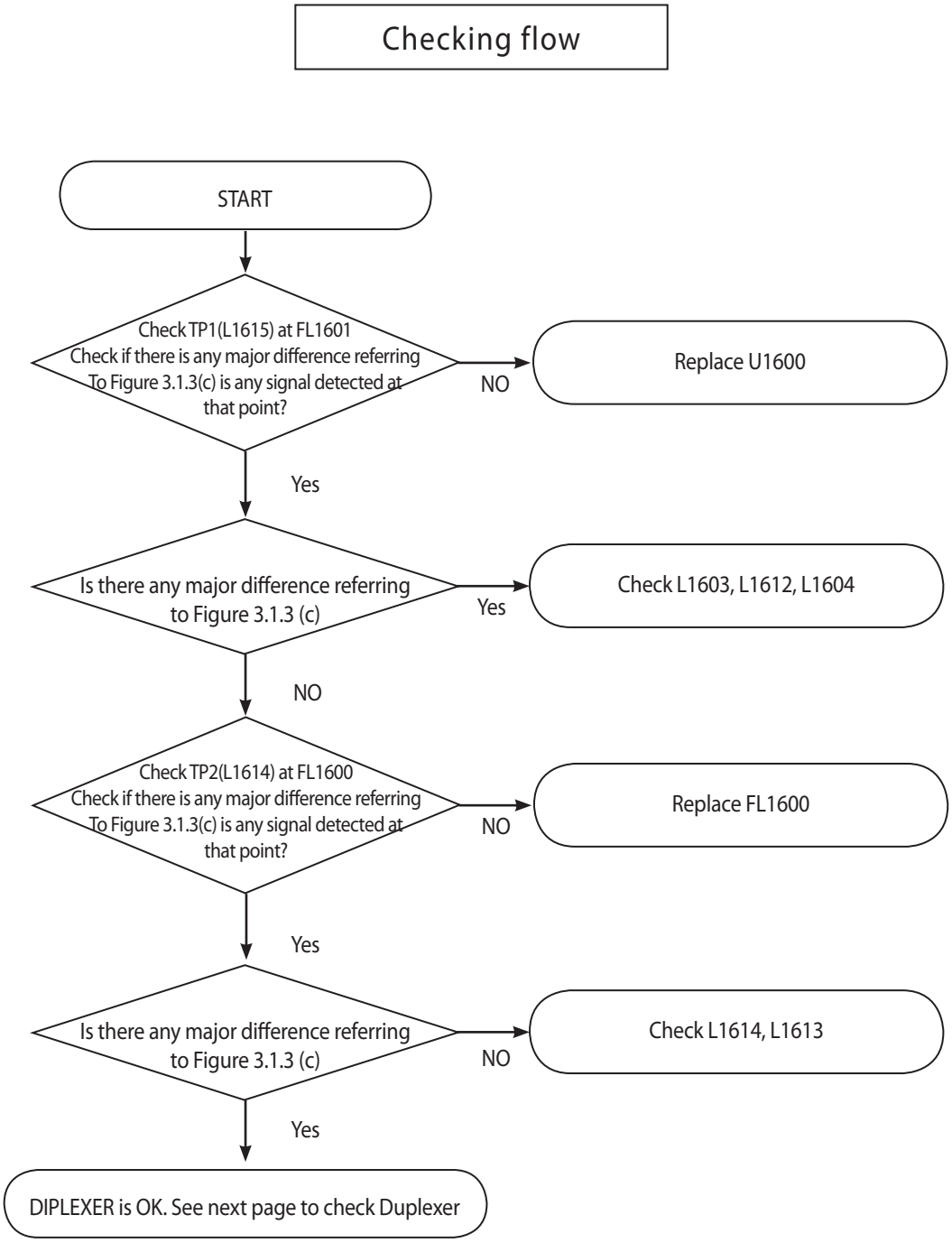

3.1.3.4 Checking RF signal path (DCN DUPLEXER)

Test Point

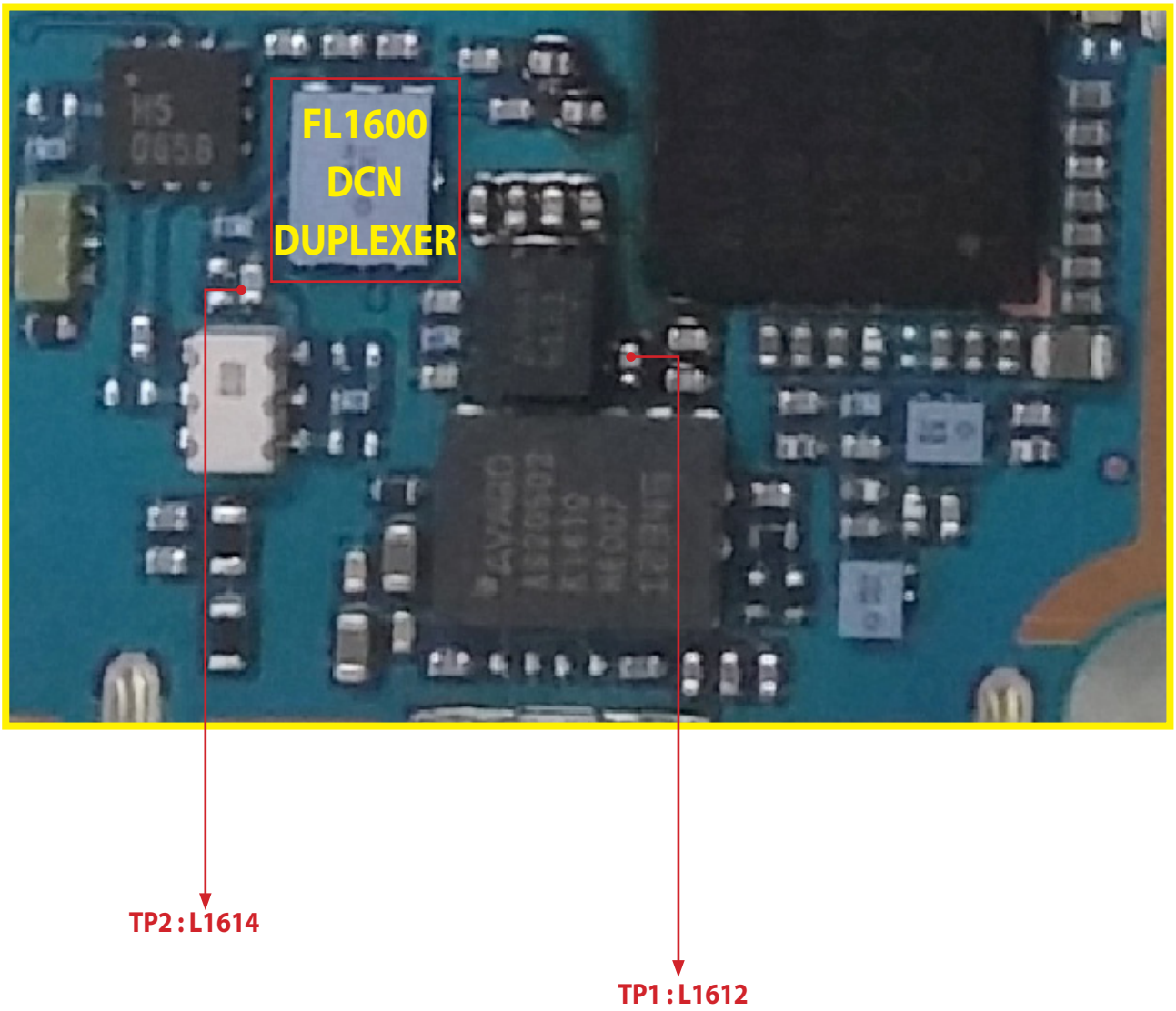

3.1.3.4 Checking RF signal path (DCN DUPLEXER)

Circuit Diagram

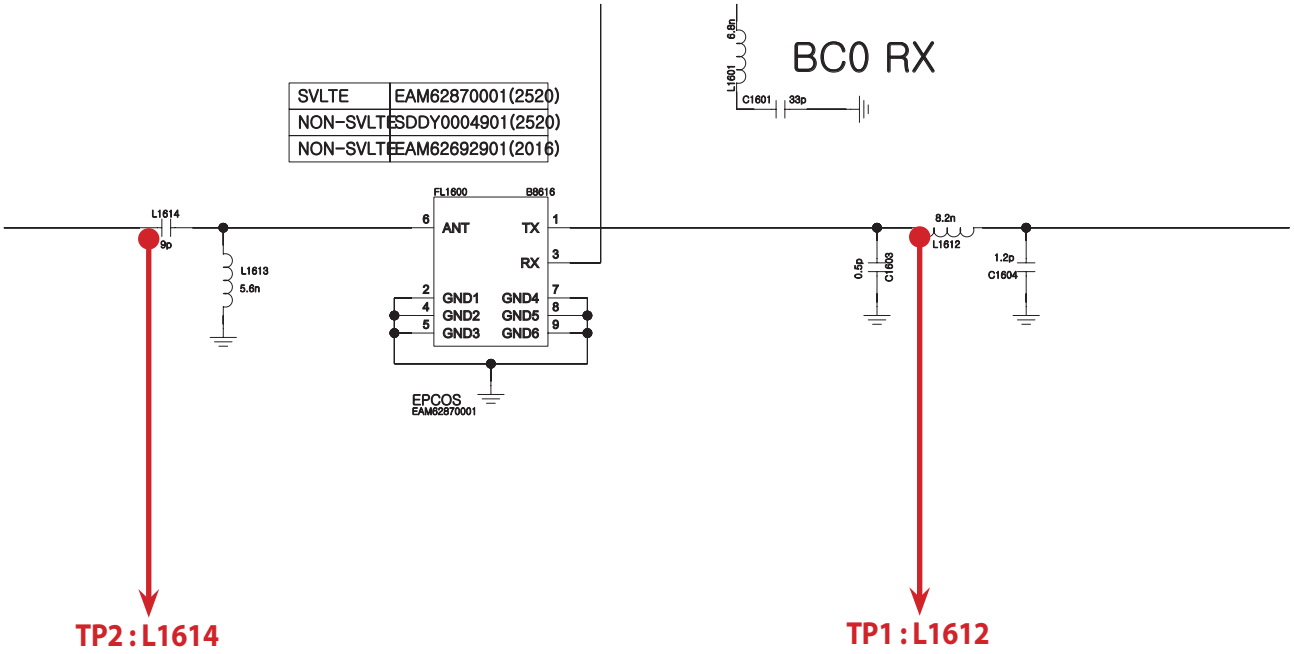

3.1.3.4 Checking RF signal path (DCN DUPLEXER)

Waveform

TP1

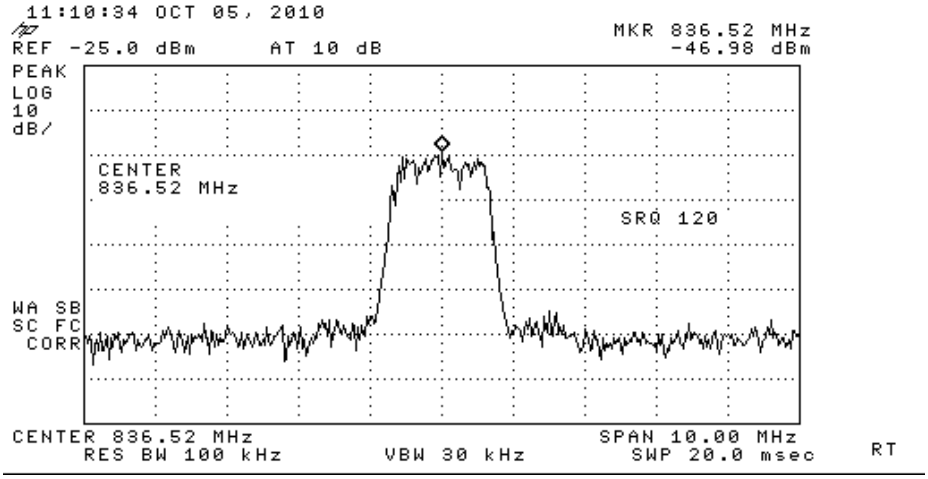

TP2

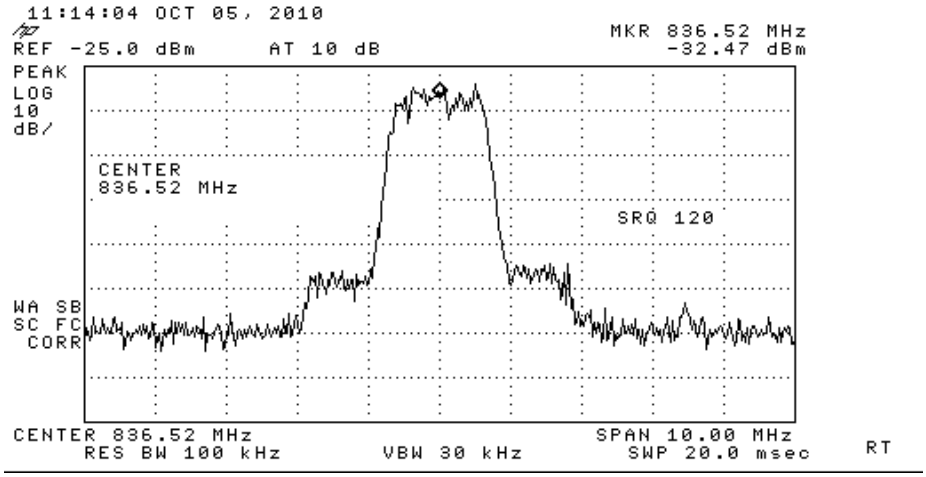

Figure 3.1.3 (c)

3.1.3.5 Checking RF signal path (DIPLEXER)

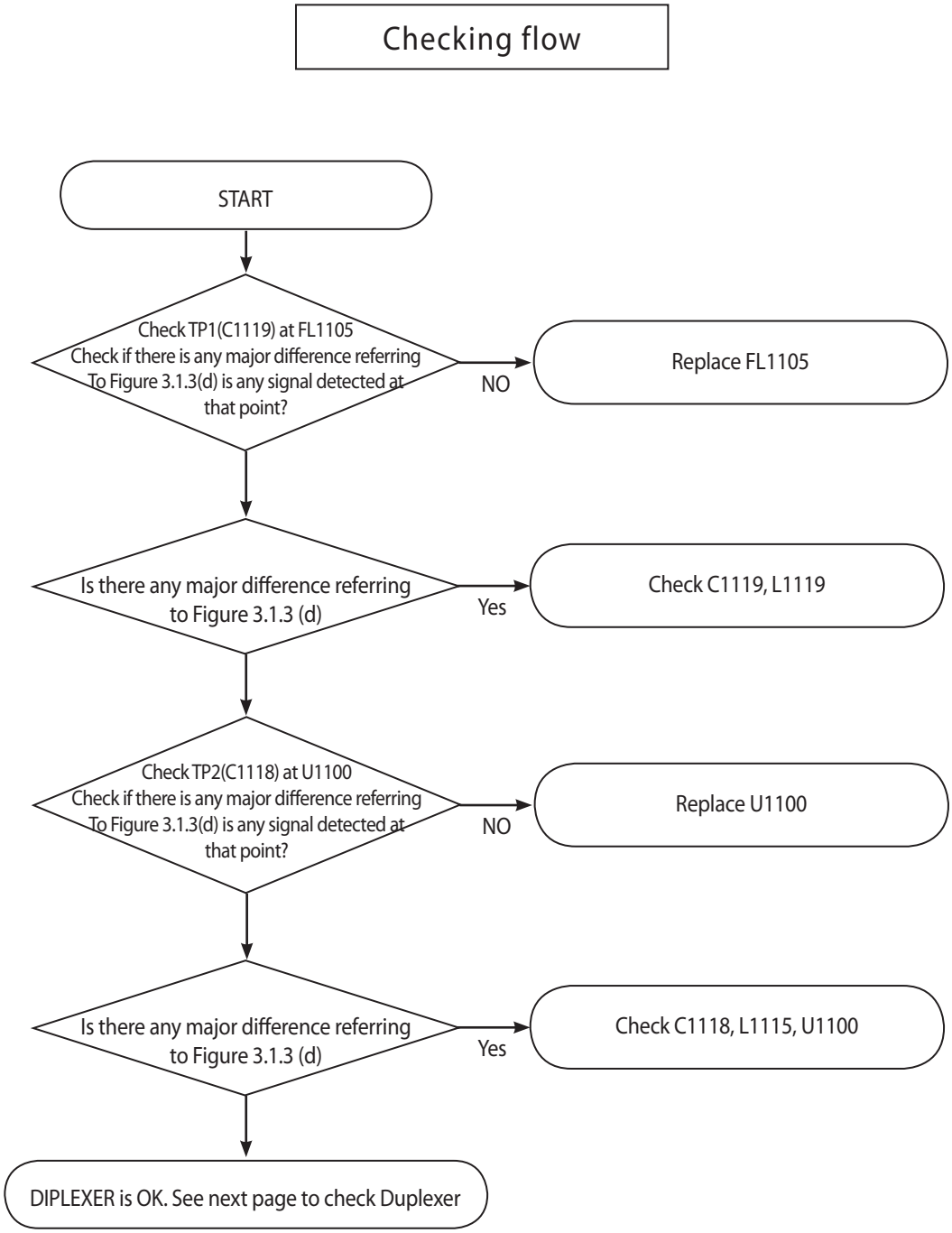

3.1.3.5 Checking RF signal path (DIPLEXER)

Test Point

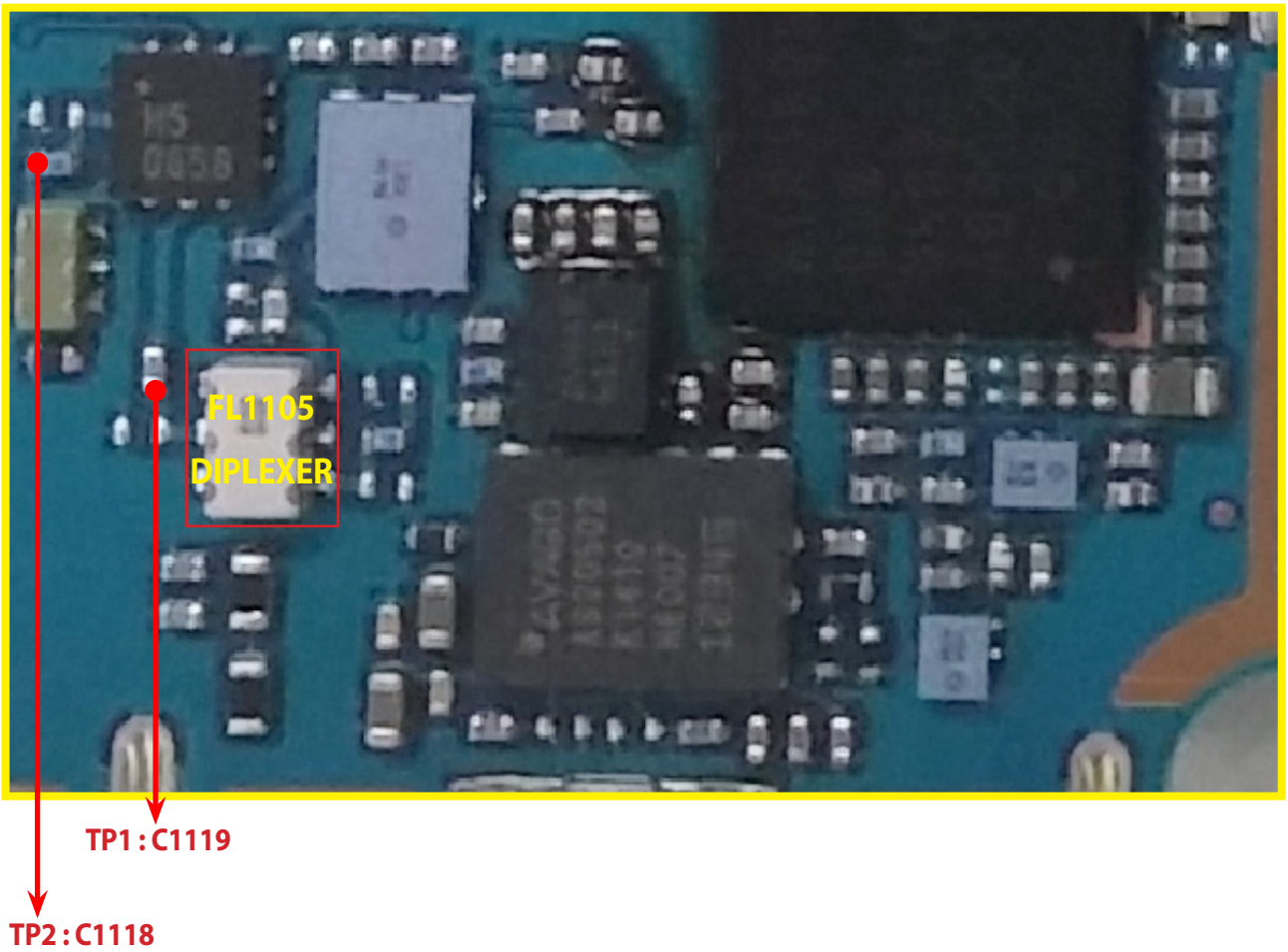

3.1.3.5 Checking RF signal path (DCN DUPLEXER)

Circuit Diagram

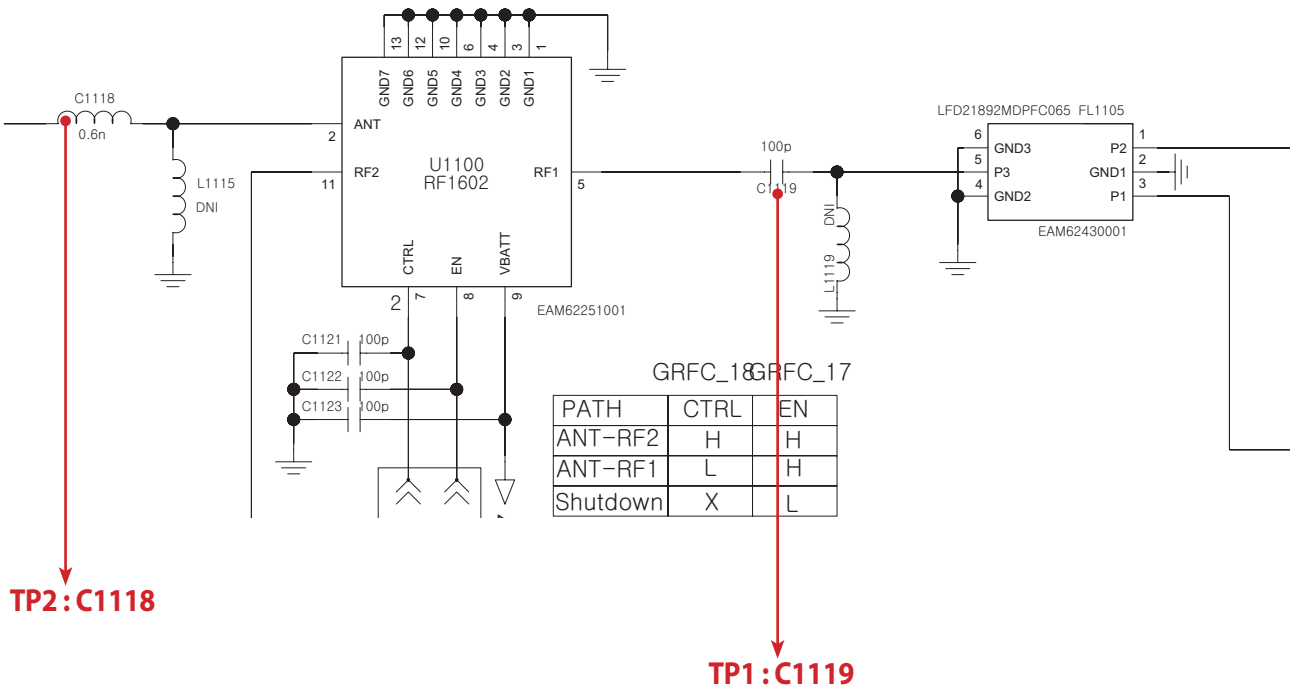

PATH	CTRL	EN
ANT-RF2	H	H
ANT-RF1	L	H
Shutdown	X	L

3.1.3.5 Checking RF signal path (DIPLEXER)

Waveform

TP1

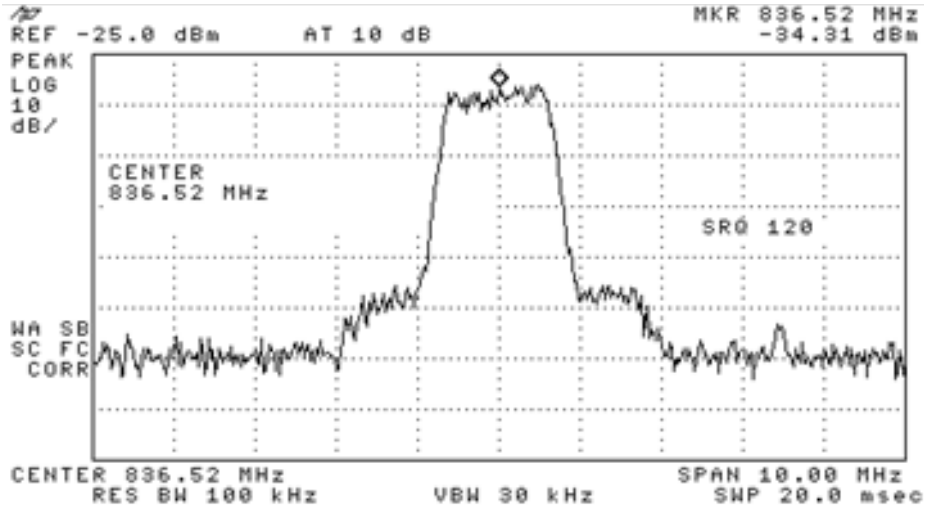

TP2

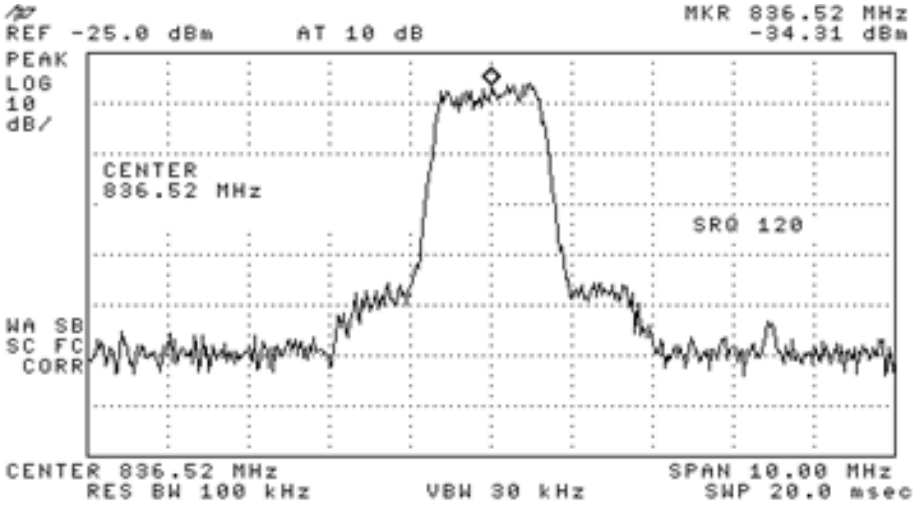

Figure 3.1.3 (d)

3.1.4 PCS 1X/DO Tx

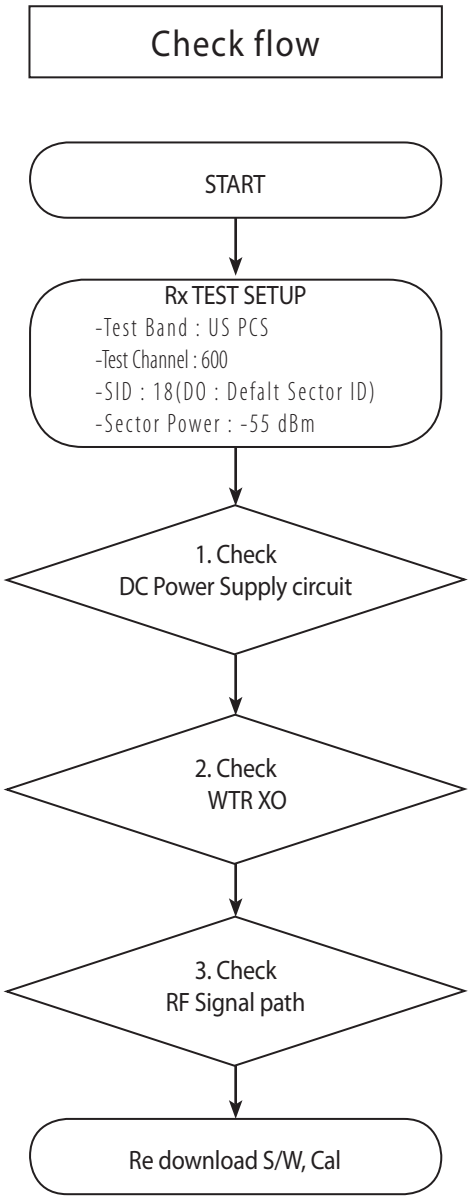

* there are no Test Points on the IQ Data Line. So It is impossible to check the IQ Data Wave form

3.1.4 PCS 1X/DO Tx

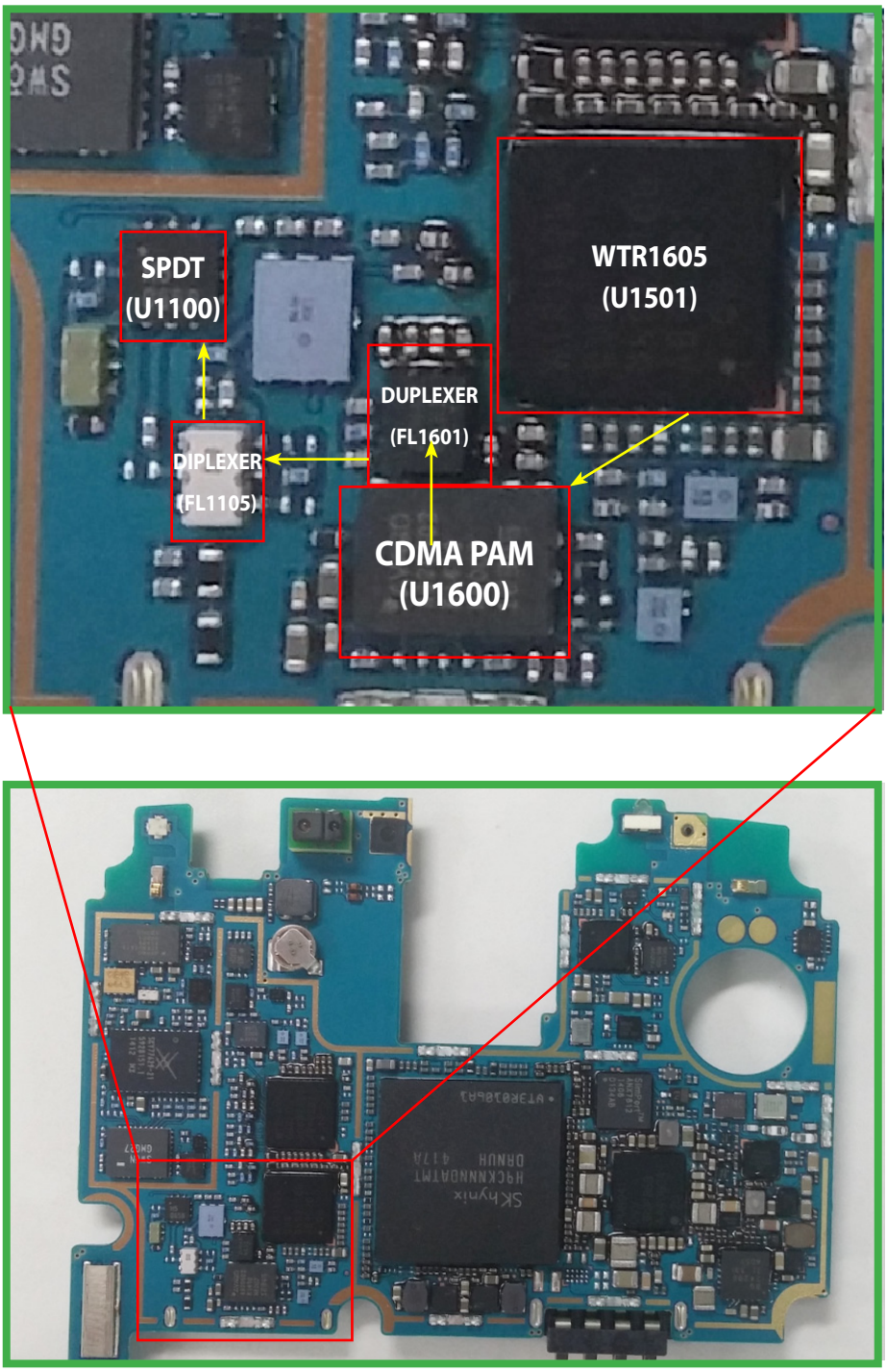

3.1.4.1 Checking DC Power supply circuit (+1.3V_VREG/ +2.05V_VREG/ +1.8V_VREG)

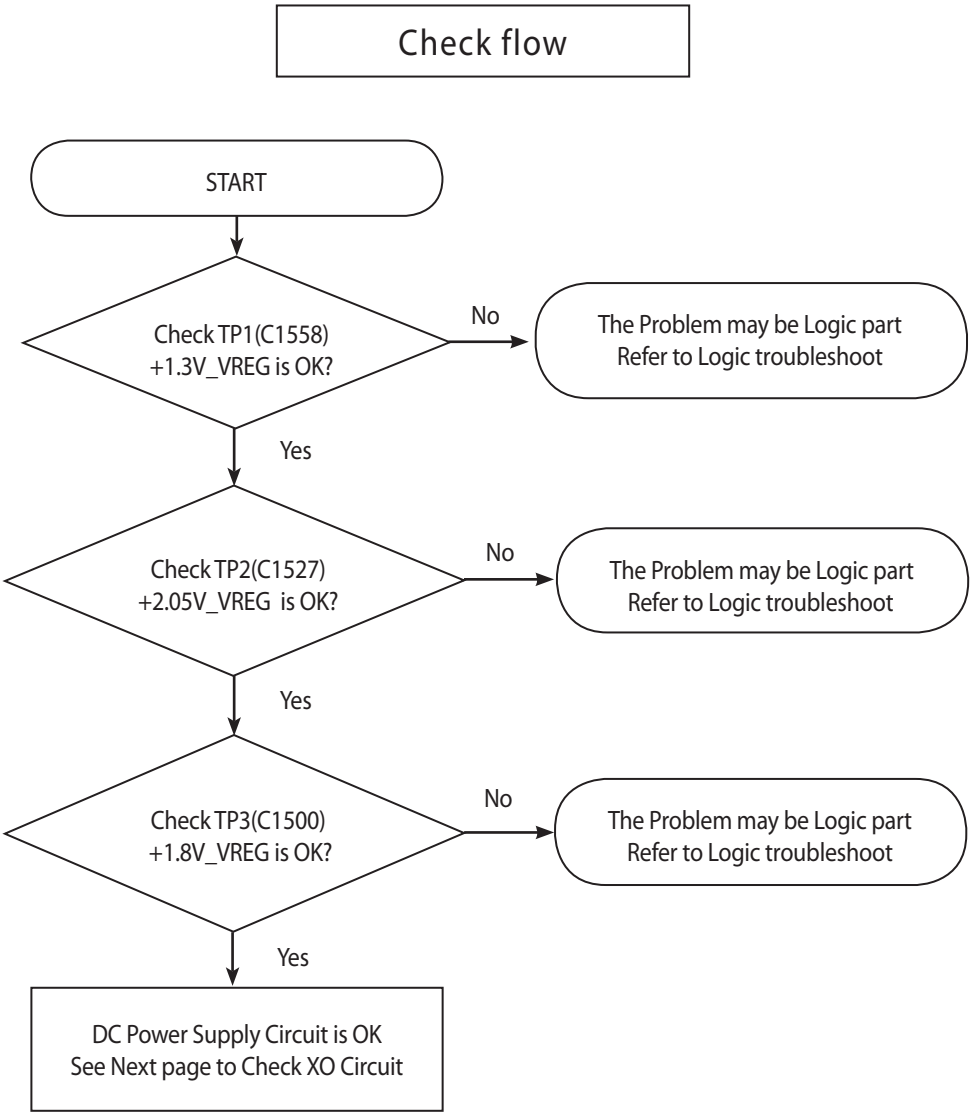

3.1.4.1 Checking DC Power supply circuit

Test Point

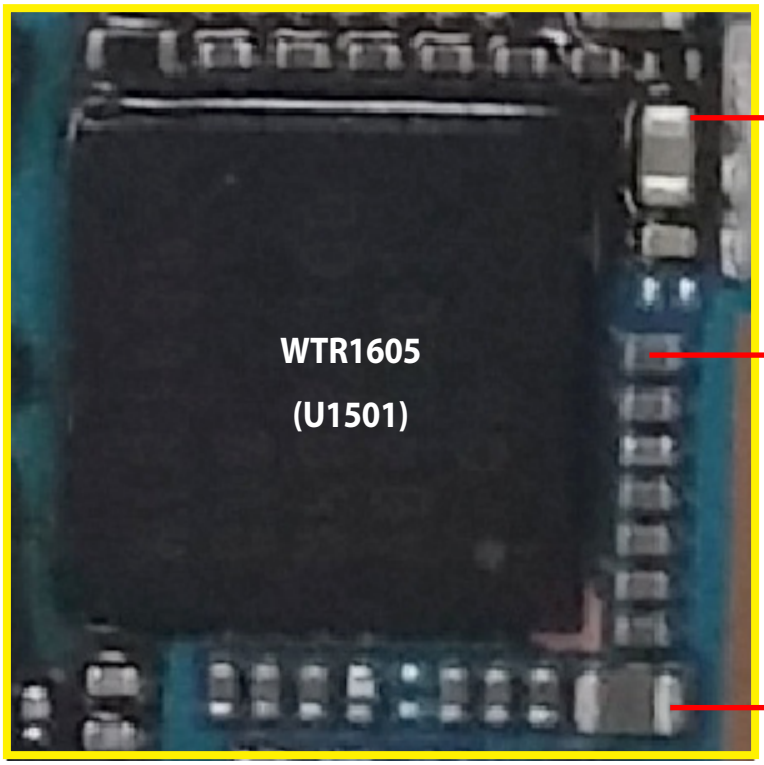

TP2 : C1527
(+2.05V_VREG)

TP3 : C1500
(+1.8V_VREG)

TP1 : C1558
(+1.3V_VREG)

Circuit Diagram

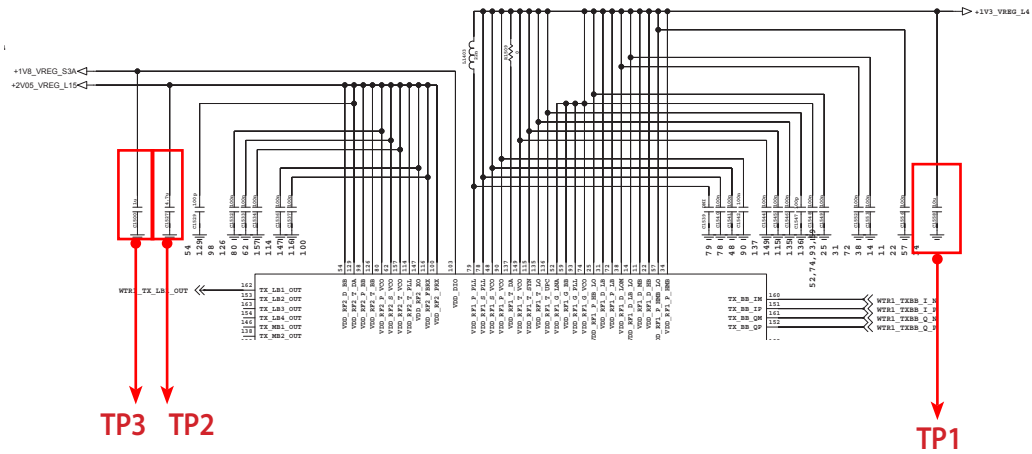

3.1.4.2 Checking WTR XO circuit

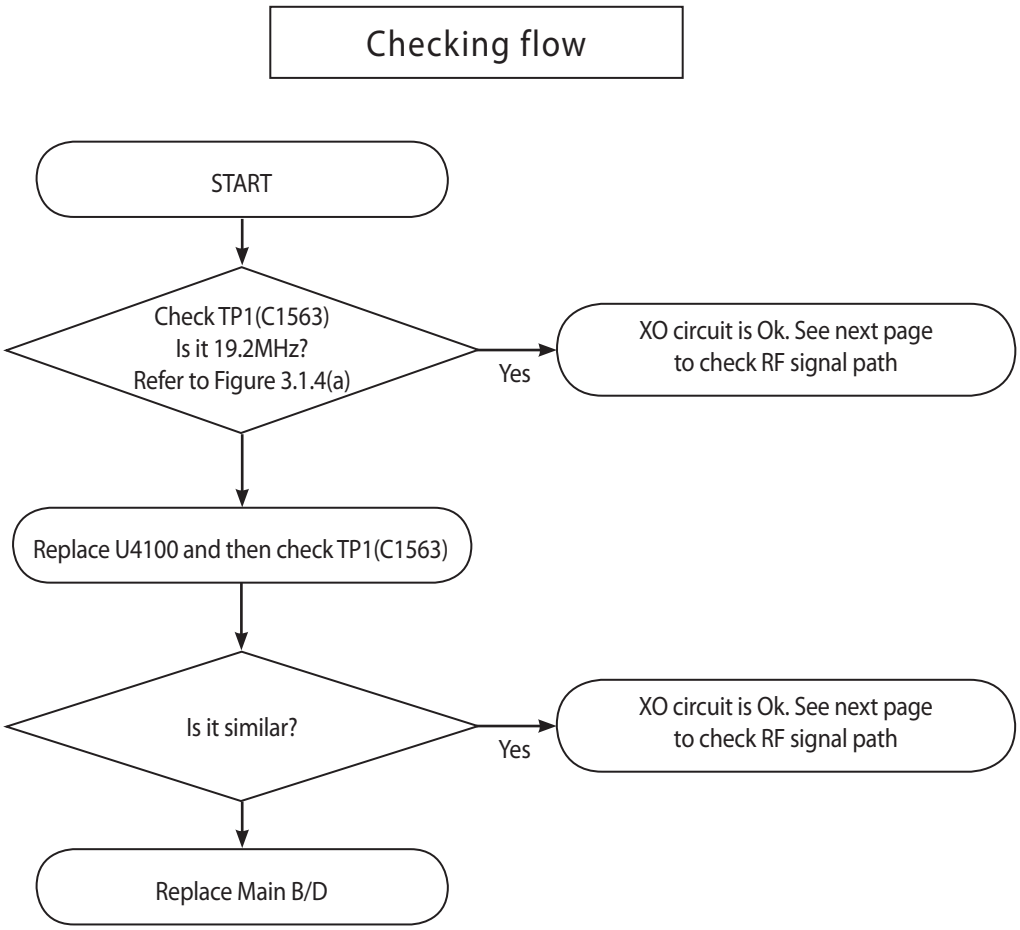

Waveform

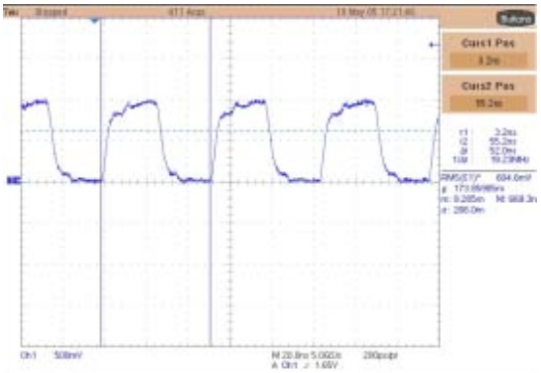

Figure 3.1.4(a)

3.1.4.2 Checking WTR XO circuit

Test Point

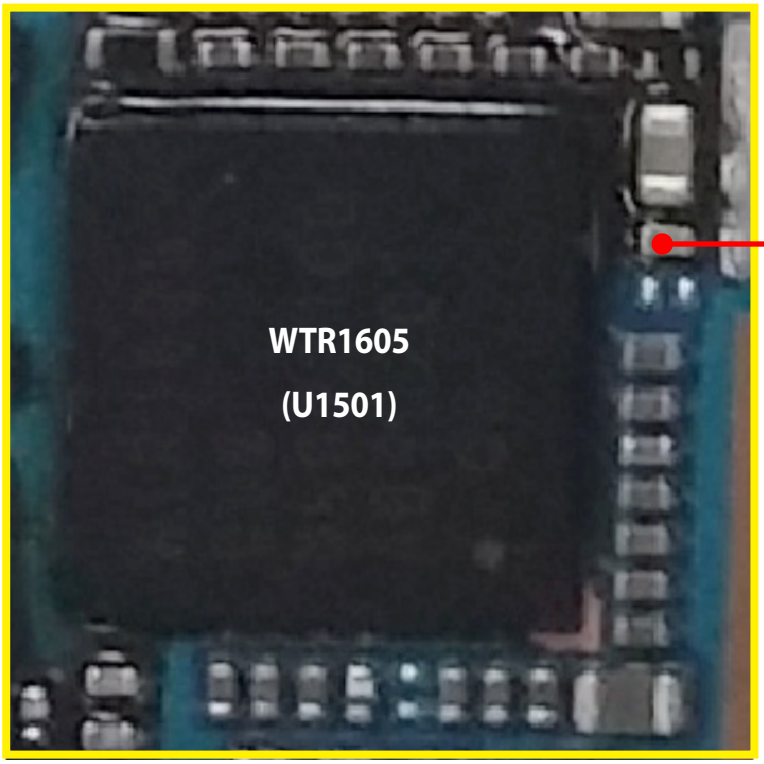

TP1 : C1563
(WTR0_XO_IN)

Bottom Side

Circuit Diagram

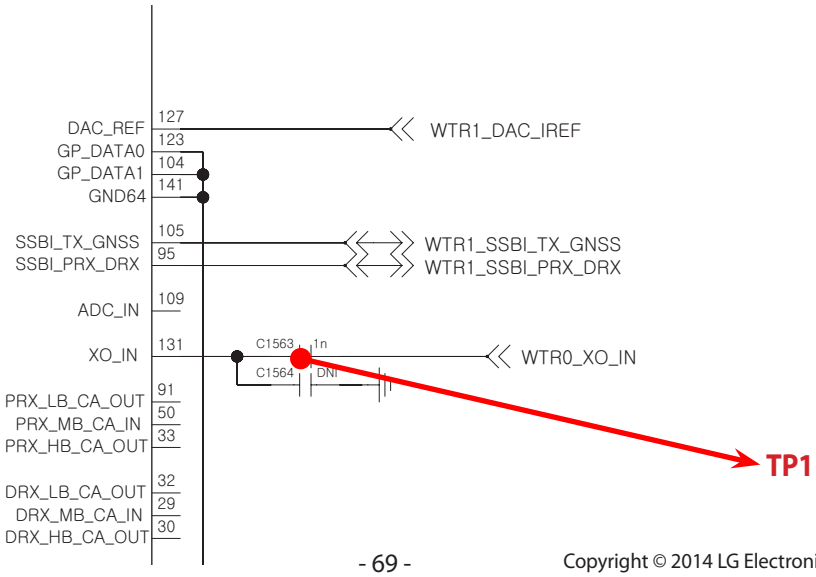

3.1.4.3 Checking RF signal path (PAM)

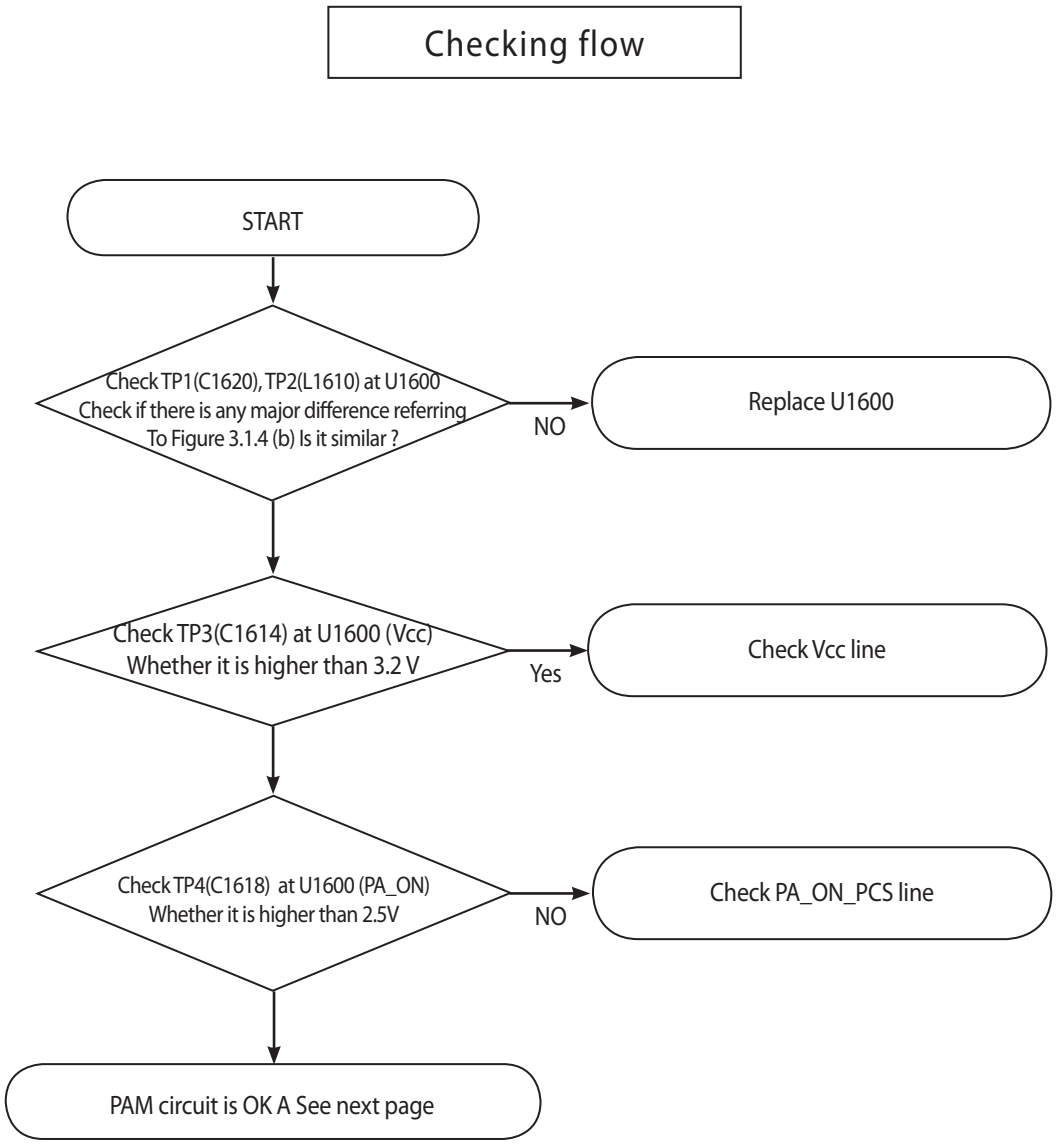

3.1.4.3 Checking RF signal path (PAM)

Test Point

TP3 : C1614
(VCC)

TP1 : C1620
(RF IN)

TP4 : C1618
(PA1_ON_1)

TP2 : L1610
(RF OUT)

3.1.4.3 Checking RF signal path (DIPLEXER)

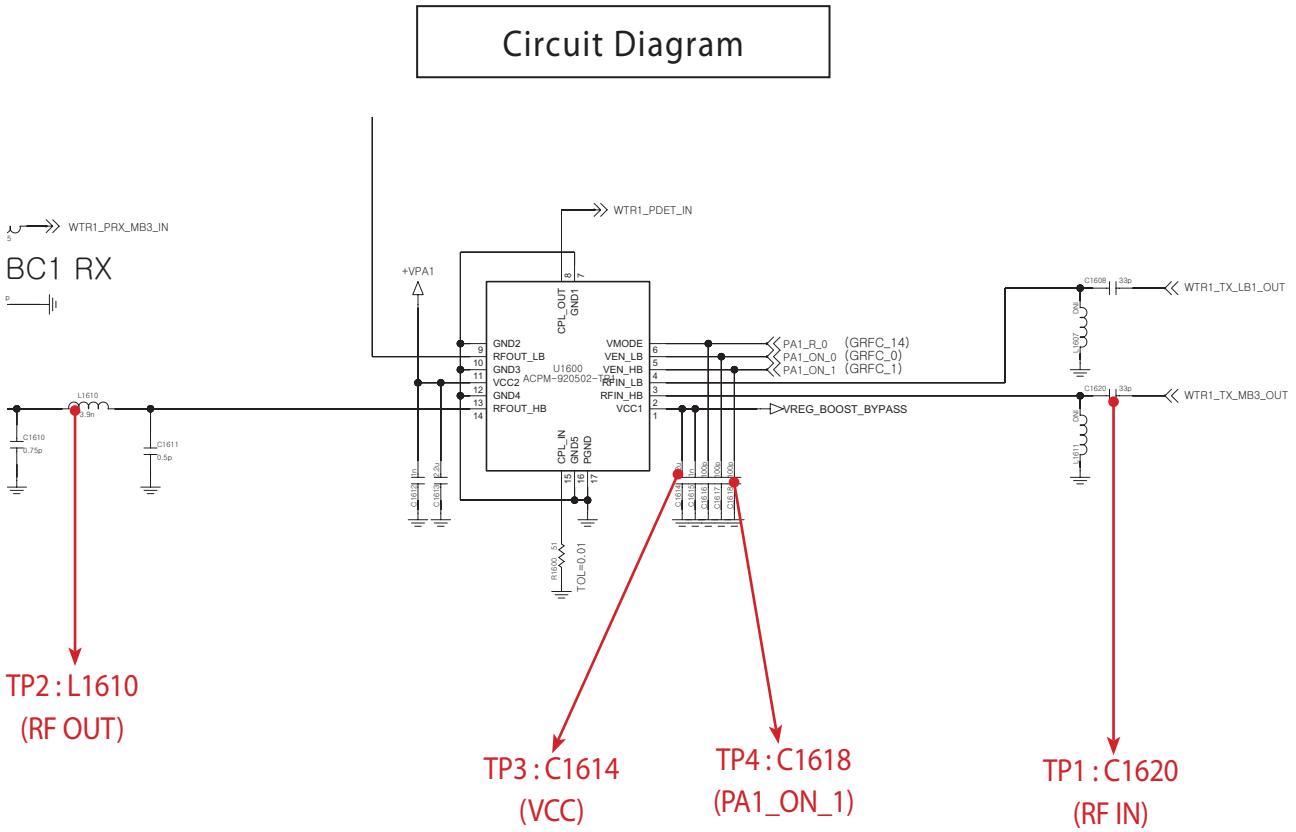

Waveform

TP1

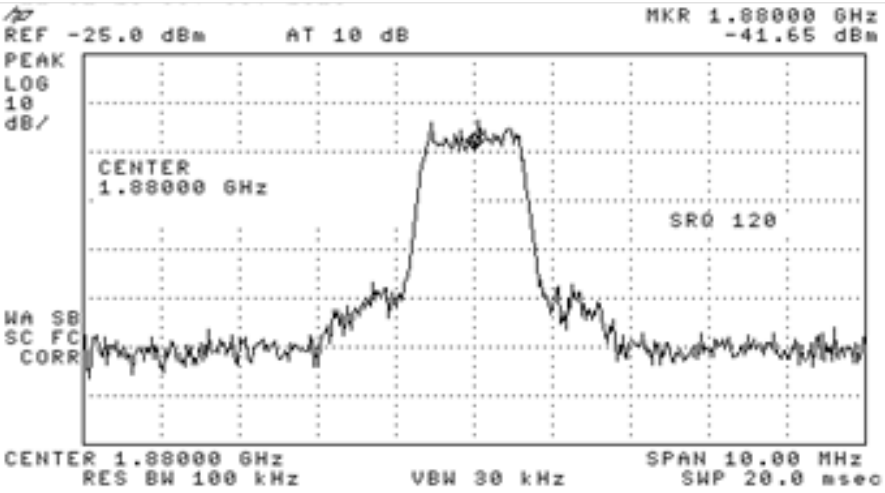

Figure 4.2.2.3 (a)

TP2

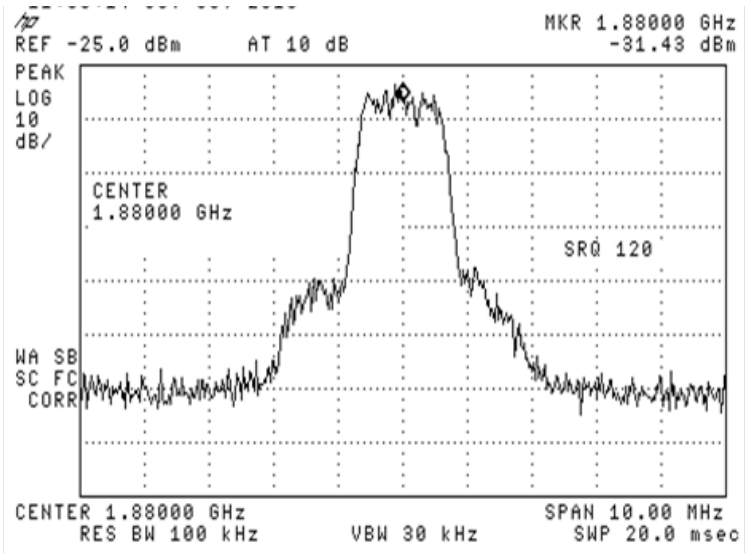

Figure 3.1.4 (b)

3.1.4.4 Checking RF signal path (PCS DUPLEXER)

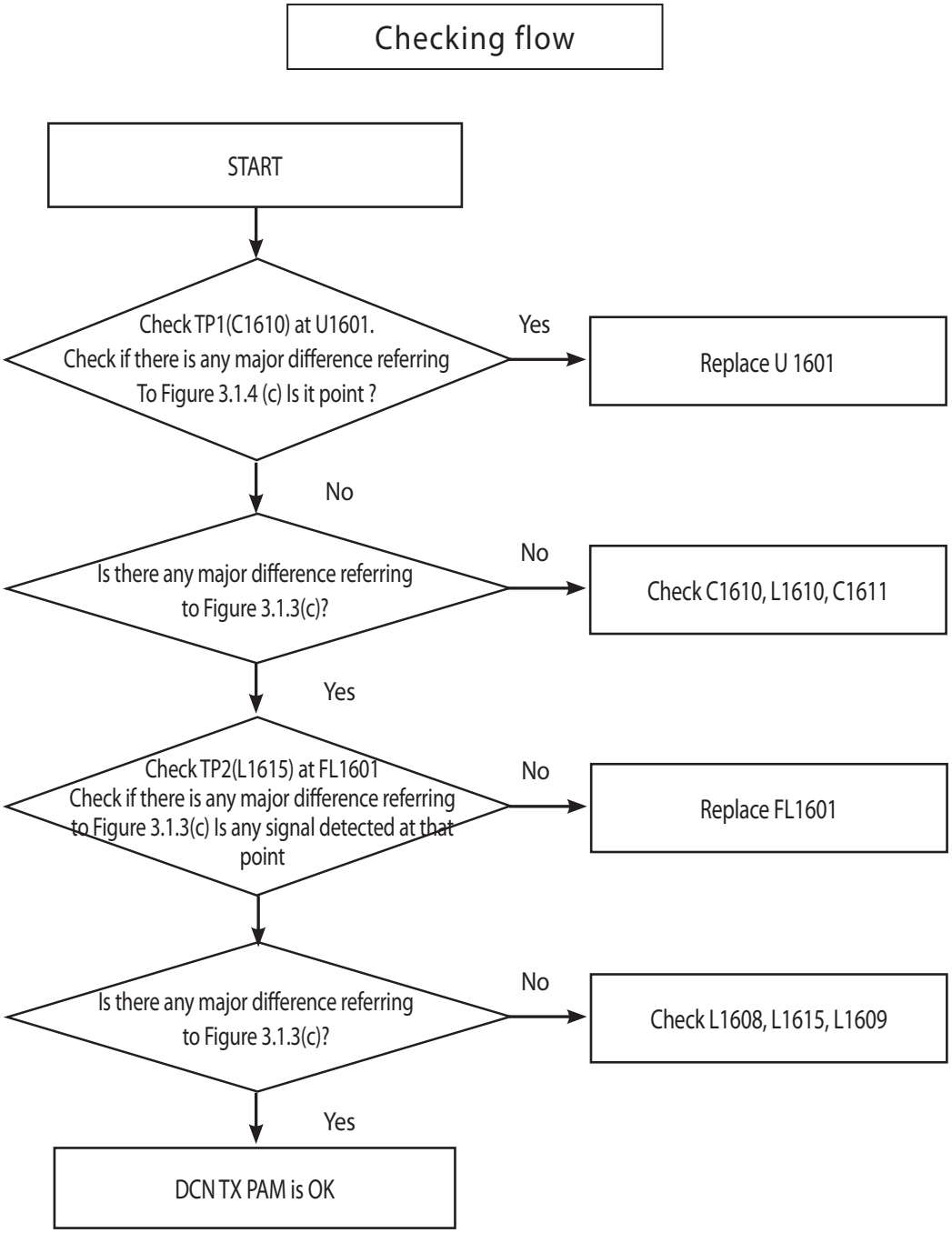

3.1.4.4 Checking RF signal path (PCS DUPLEXER)

Test Point

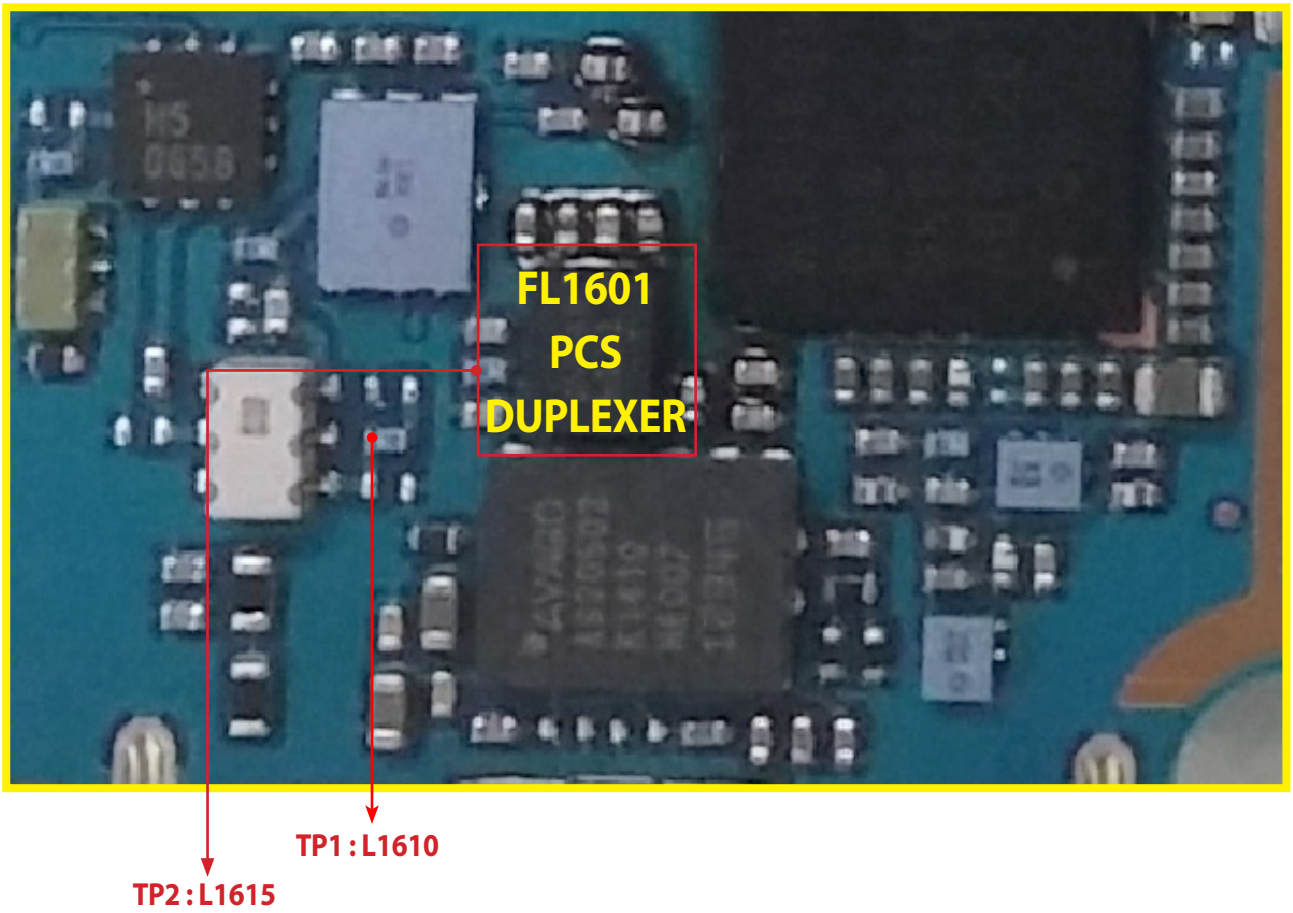

3.1.4.5 Checking RF signal path (DCN DUPLEXER)

Circuit Diagram

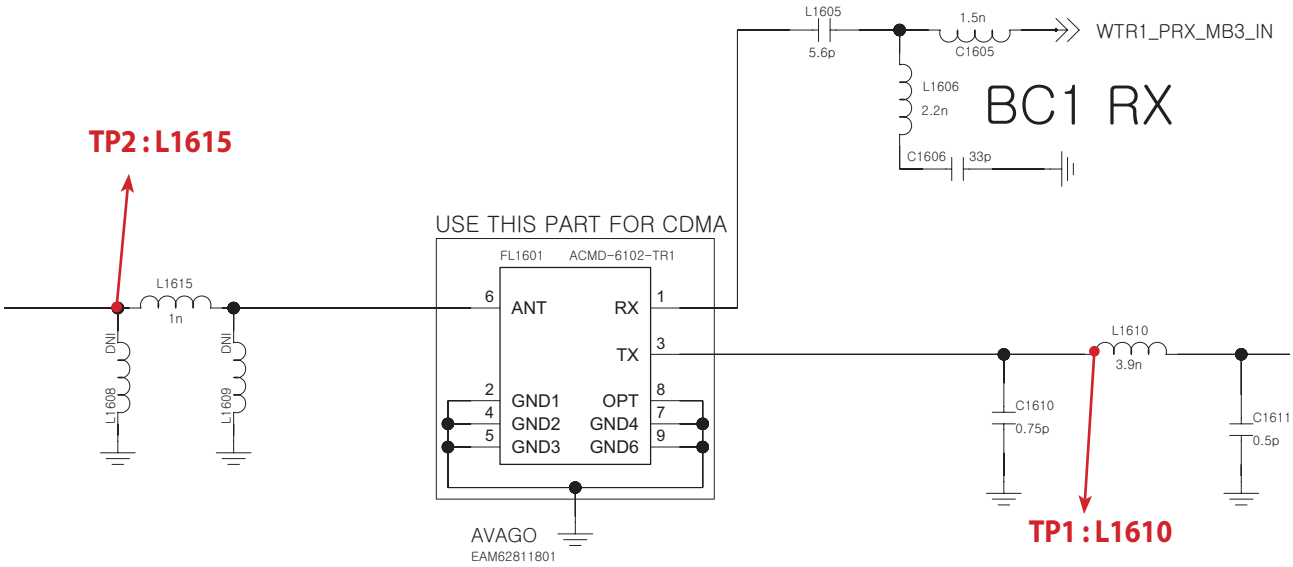

TP1, TP2

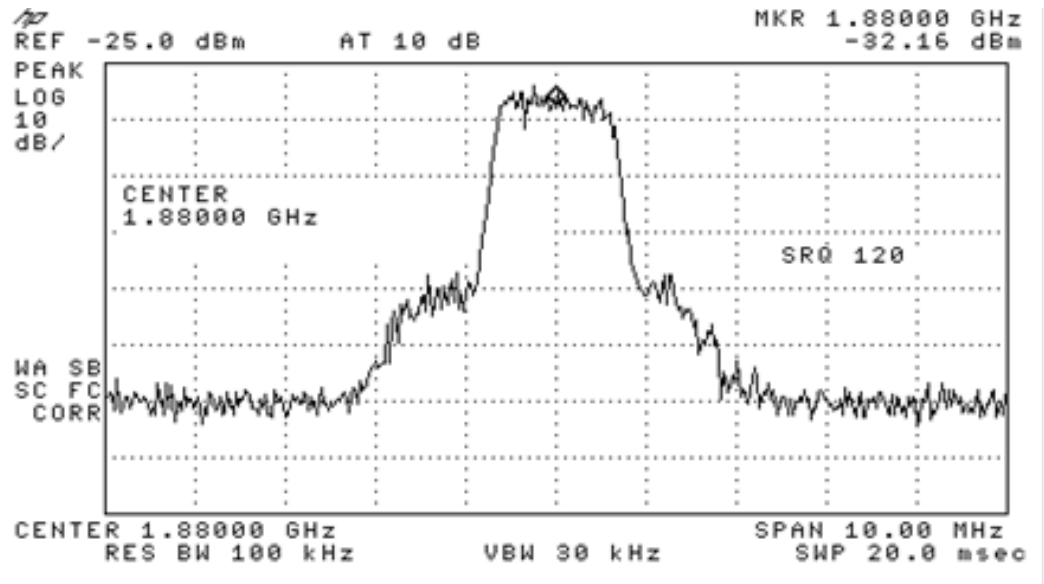

Figure 3.1.4 (c)

3.2 WCDMA Rx Part Troubleshooting

3.2.1 WCDMA_B1 Rx

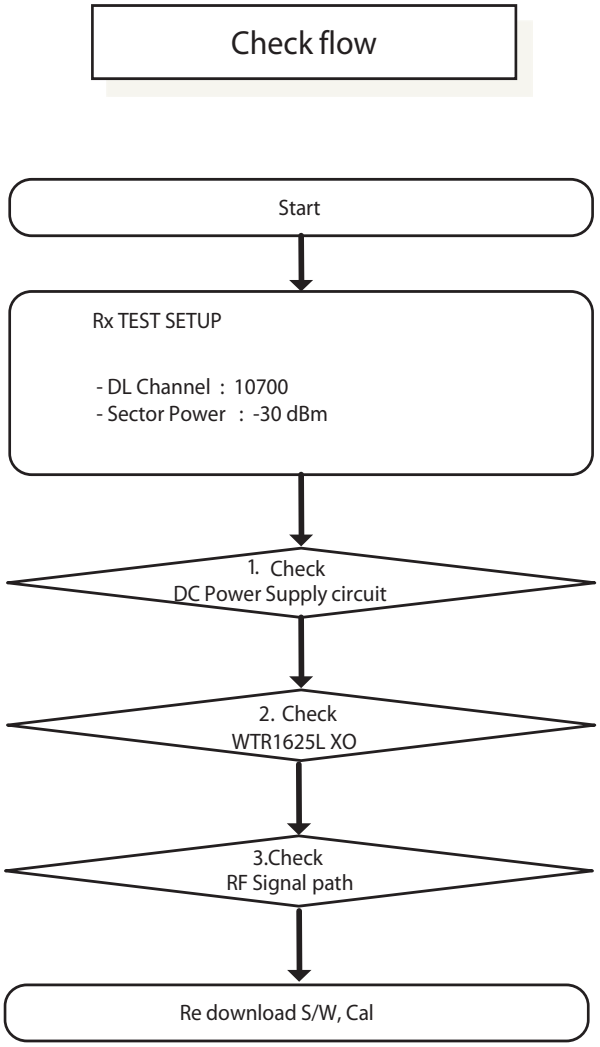

※ there are no Test Points on the IQ Data Line. So It is impossible to check the IQ Data Wave form

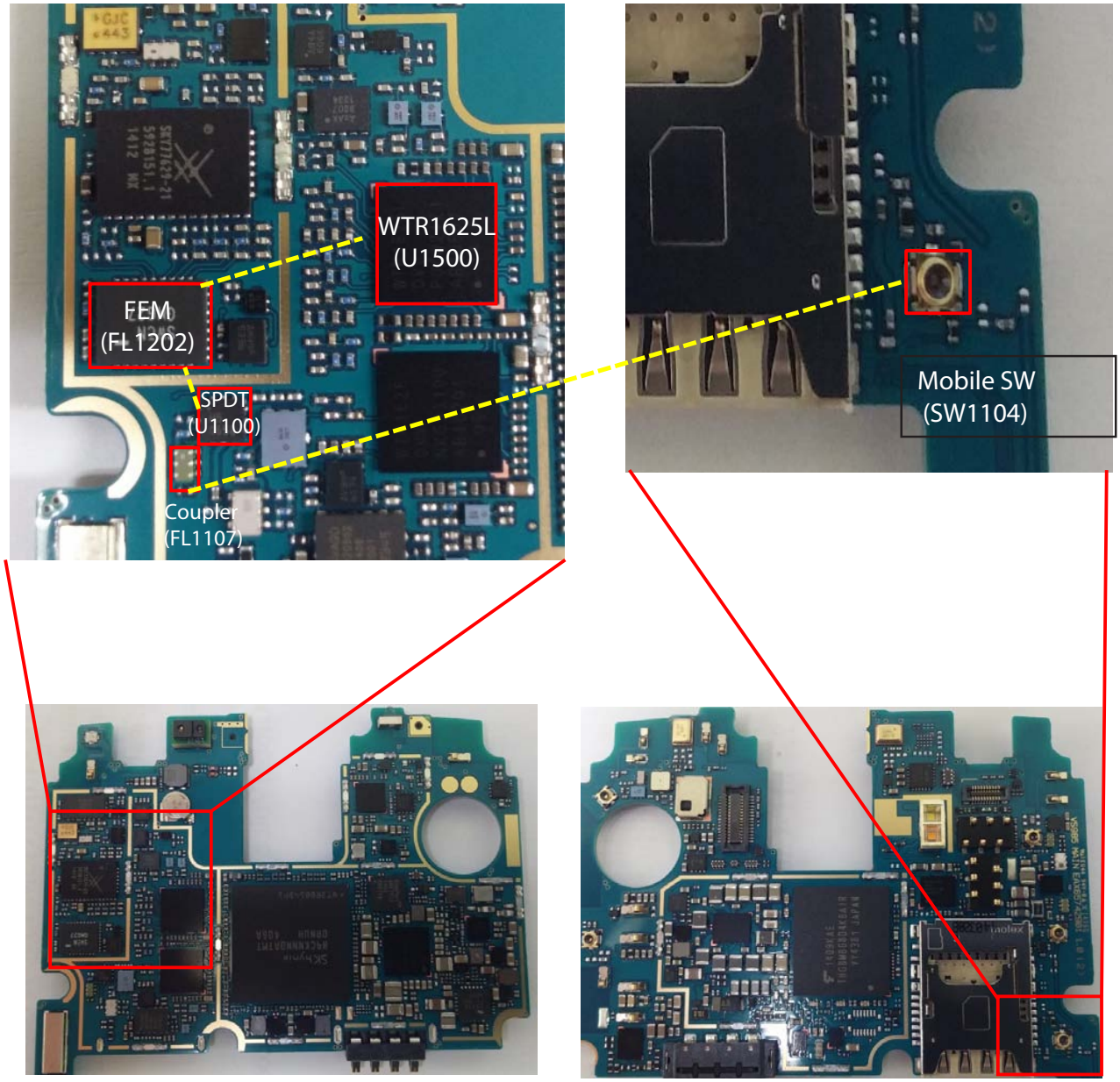

<AS985 _Main PCB_Top>

< AS985 _Main PCB_Bottom>

3.2.1.1 Checking DC Power Supply Circuit

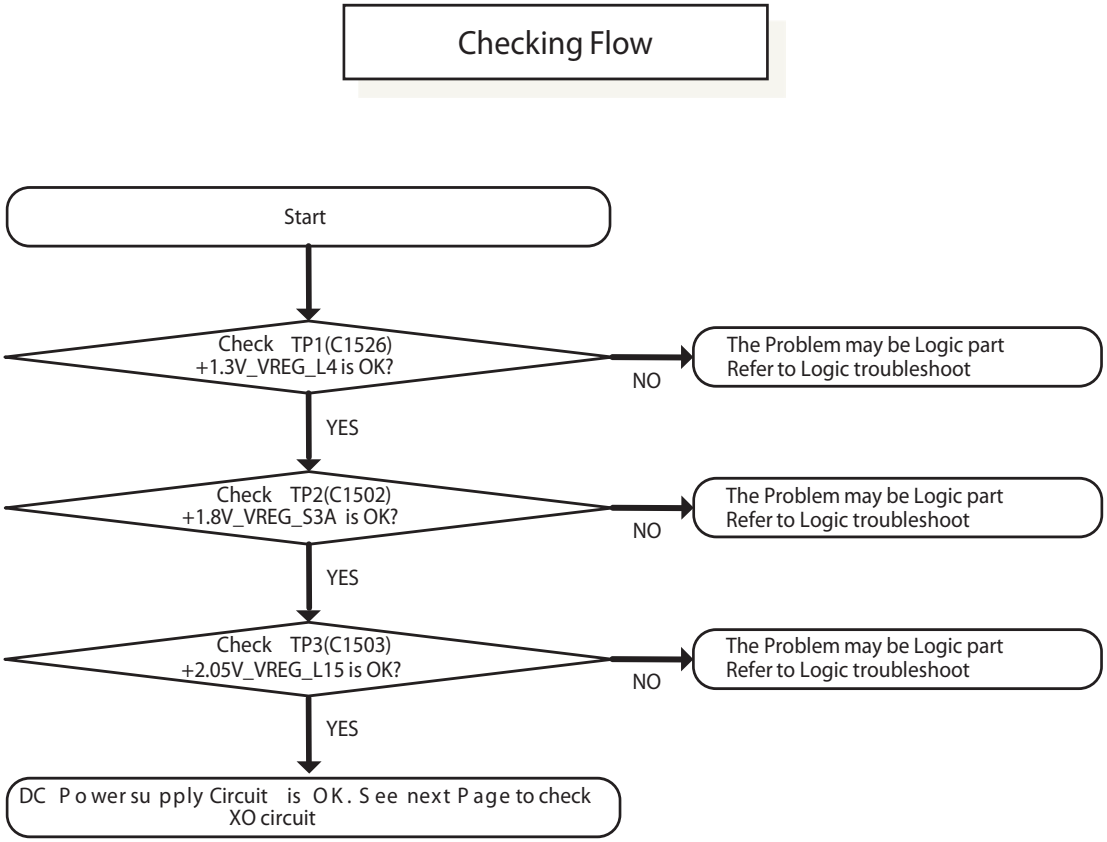

3.2.1.1 Checking DC Power Supply Circuit (+1.3V_VREG_L4 / +1.8V_VREG_S3A

Test Point

TP2 : C1502
(+1.8V_VREG_S3A)

TP1 : C1526
(+1.3V_VREG_L4)

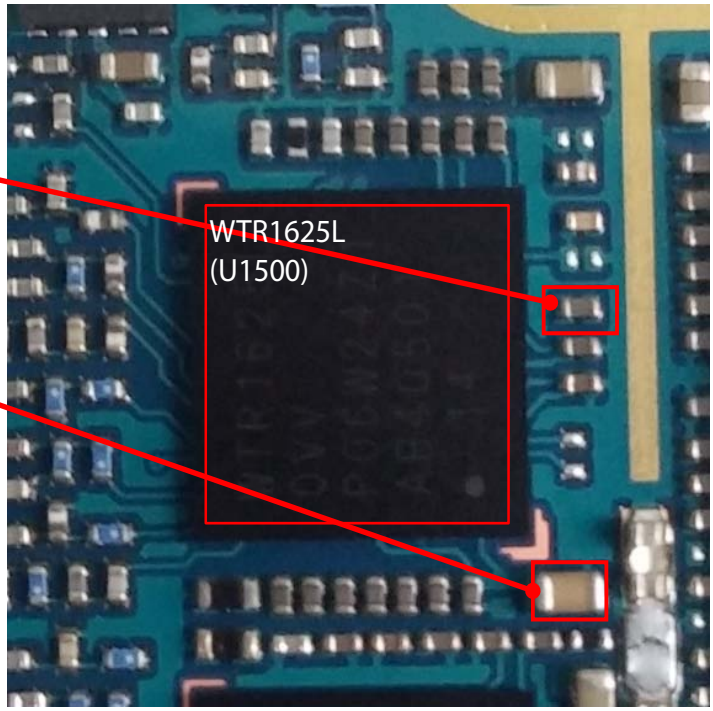

Top Side

Circuit Diagram

+1.3V_VREG_L4 / +1.8V_VREG_S3A

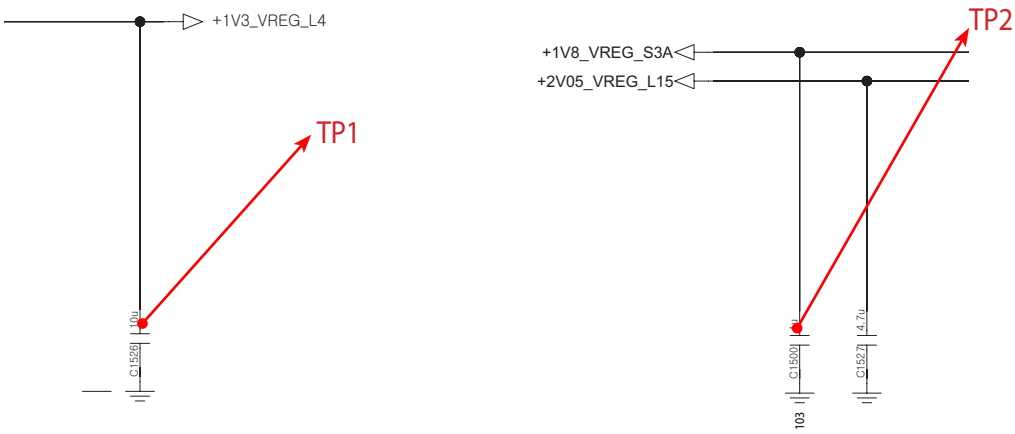

3.2.1.1 Checking DC Power Supply Circuit (+1.3V_VREG_L4 / +1.8V_VREG_S3A

Test Point

TP3 : C1503
(+2.05V_VREG_L15)

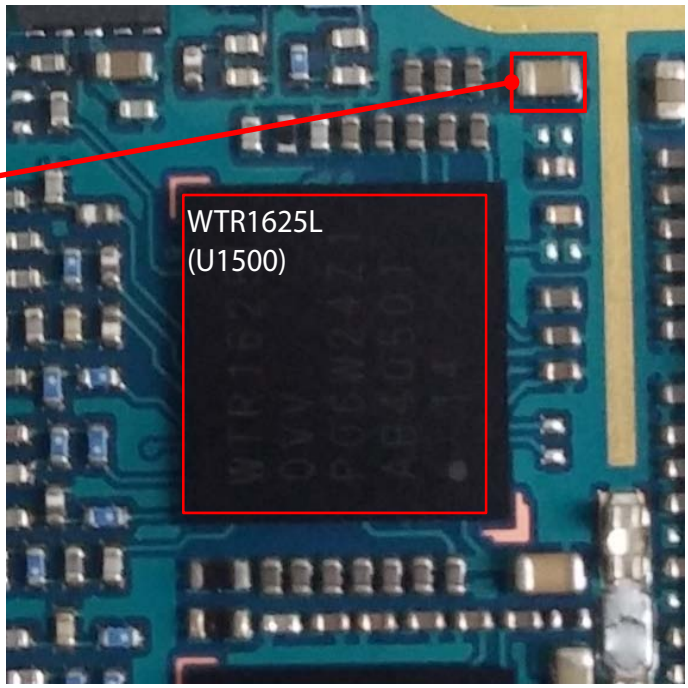

Top Side

Circuit Diagram

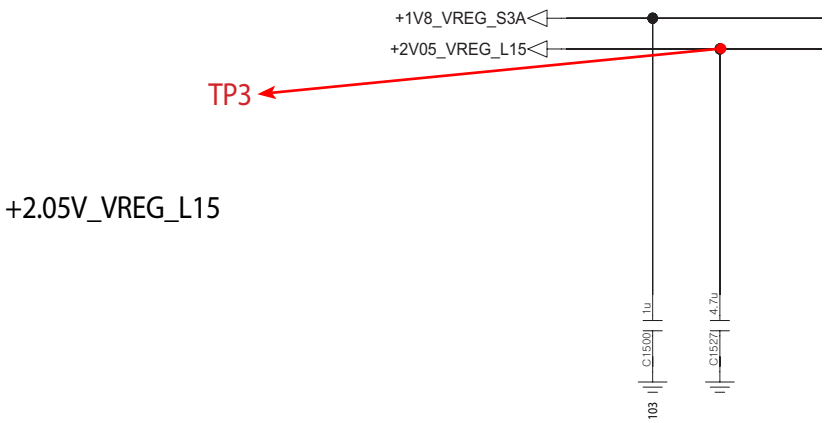

3.2.1.2 Checking WTR1625L XO Circuit

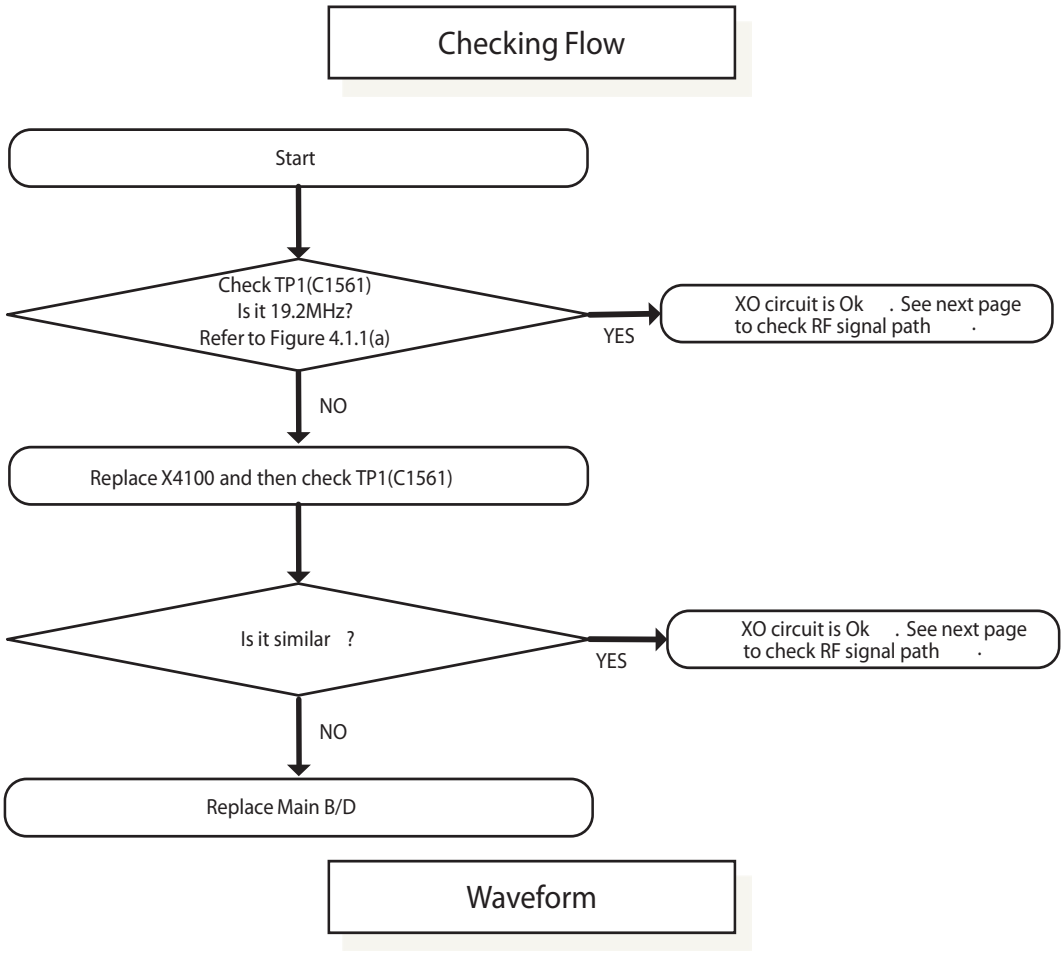

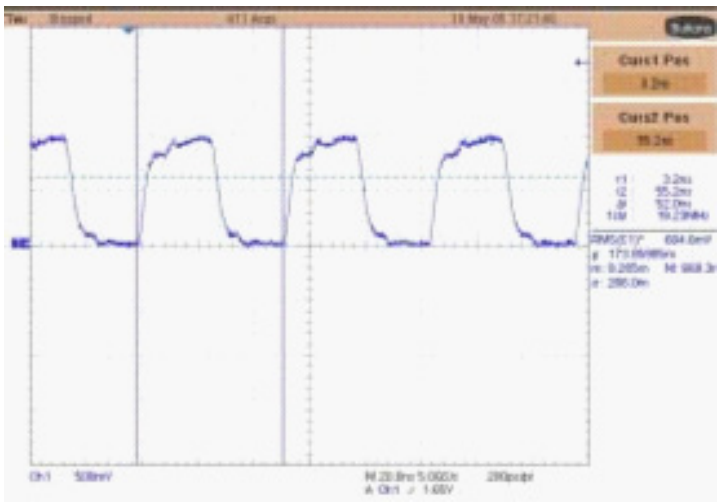

Figure 3.1.1 (a)

3.2.1.2 Checking WTR1625L XO Circuit

Test Point

TP1 : C1561
(WTR_XO_IN)

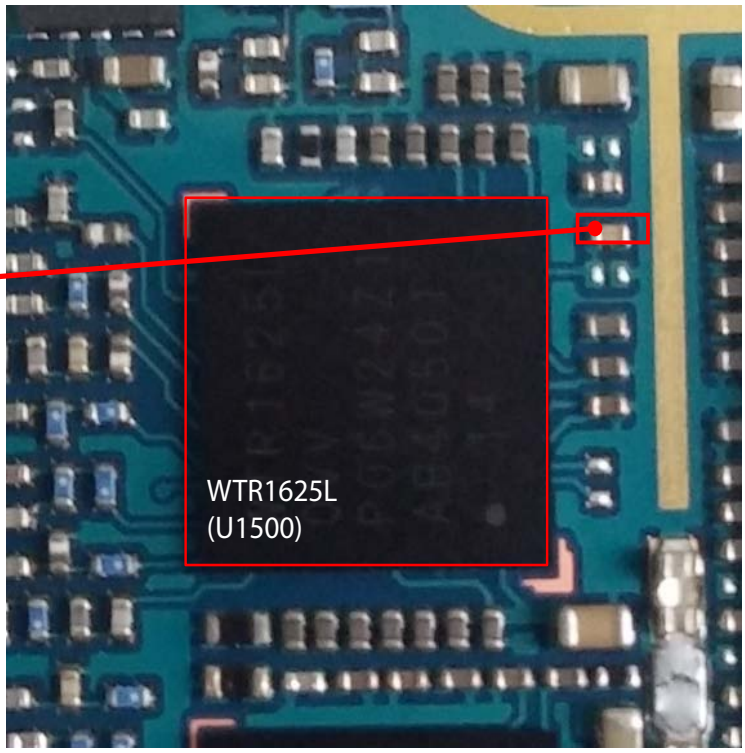

Circuit Diagram

WTR_XO_IN

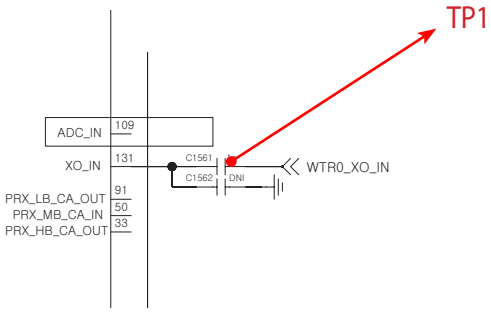

3.2.1.3 Checking RF Signal Path (SPDT)

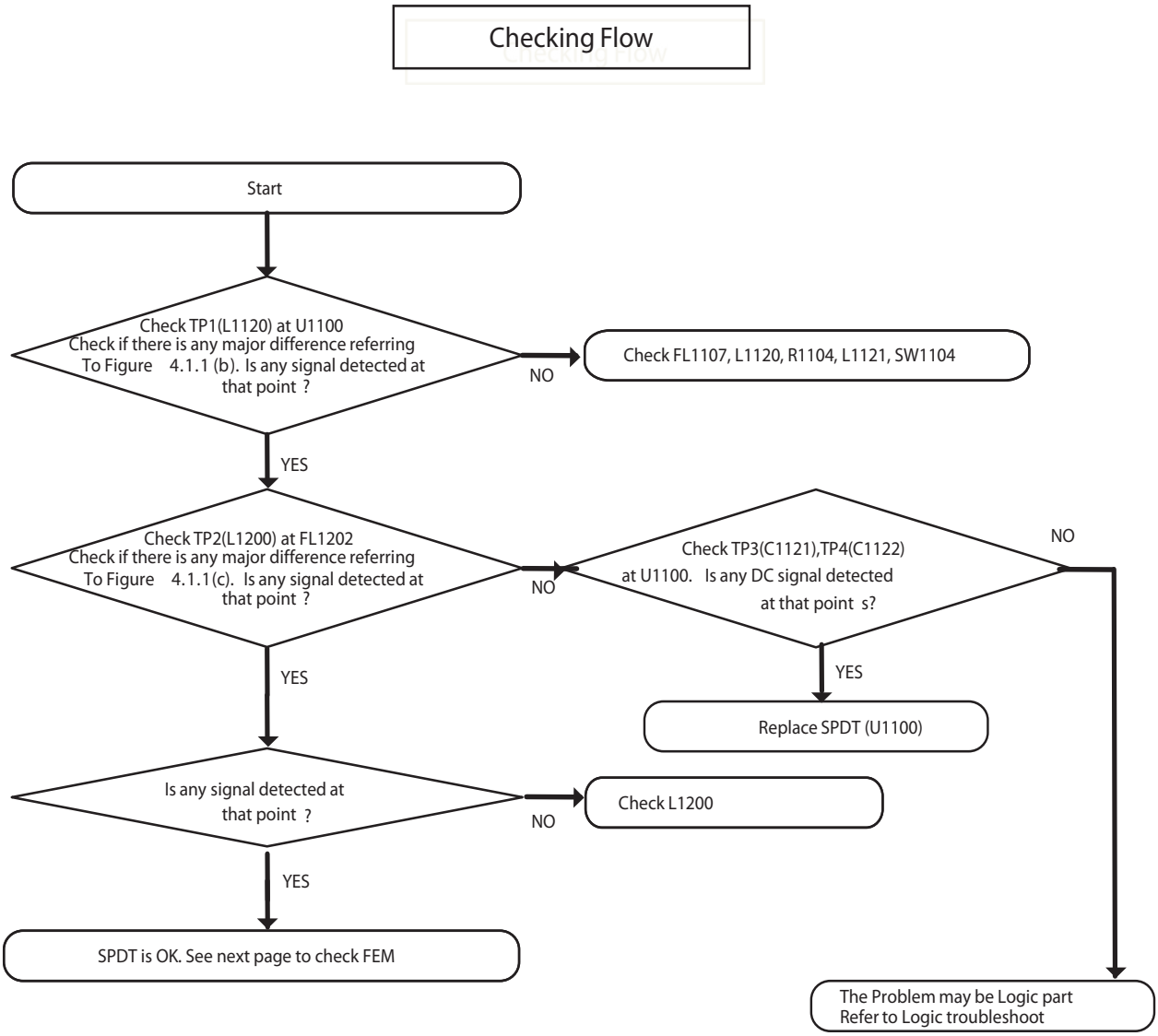

3.2.1.3 Checking RF Signal Path (SPDT)

Test Point

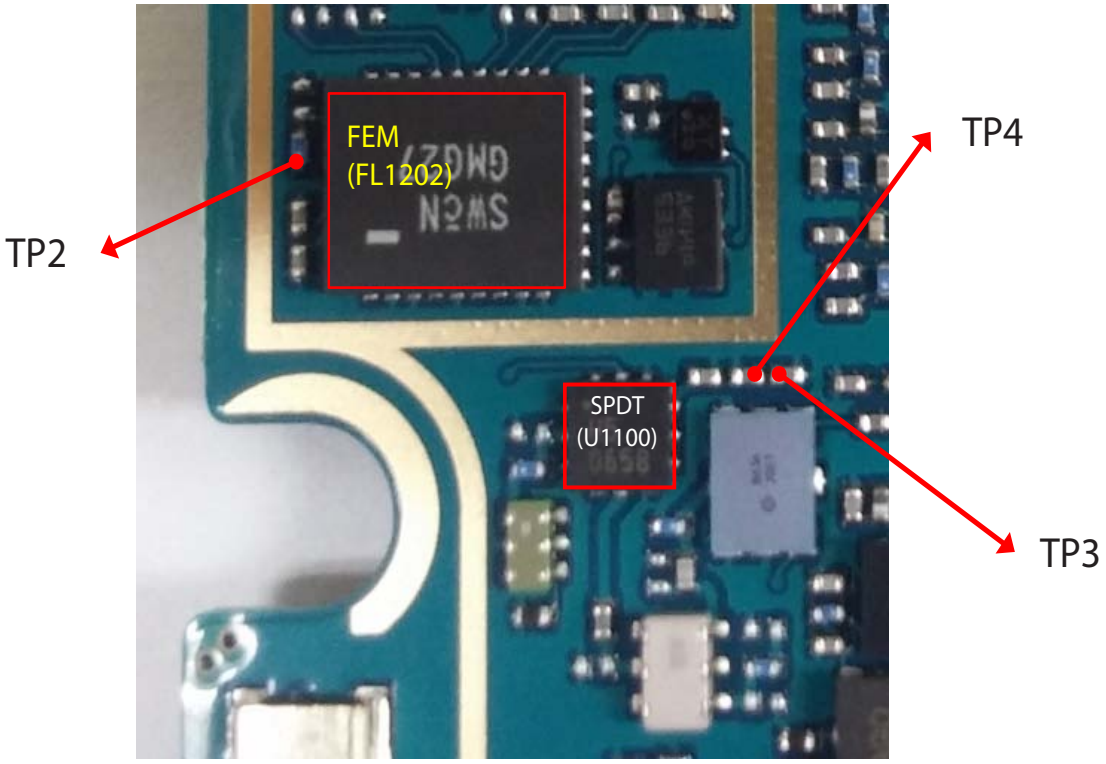

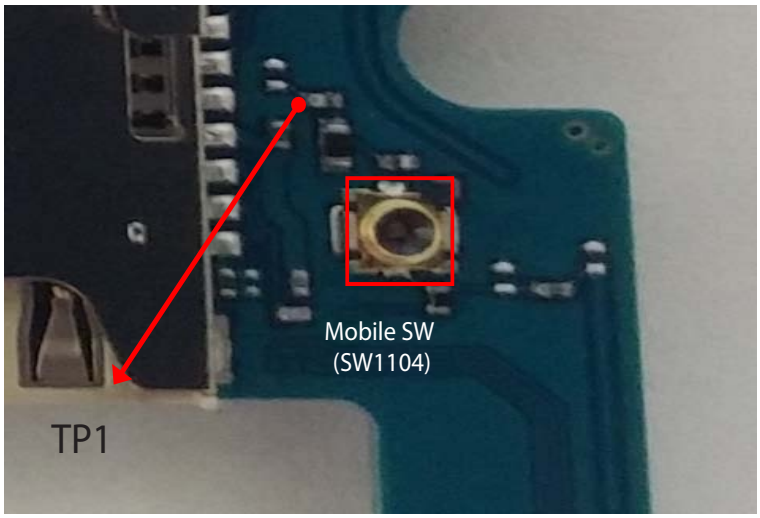

3.2.1.3 Checking RF Signal Path (SPDT)

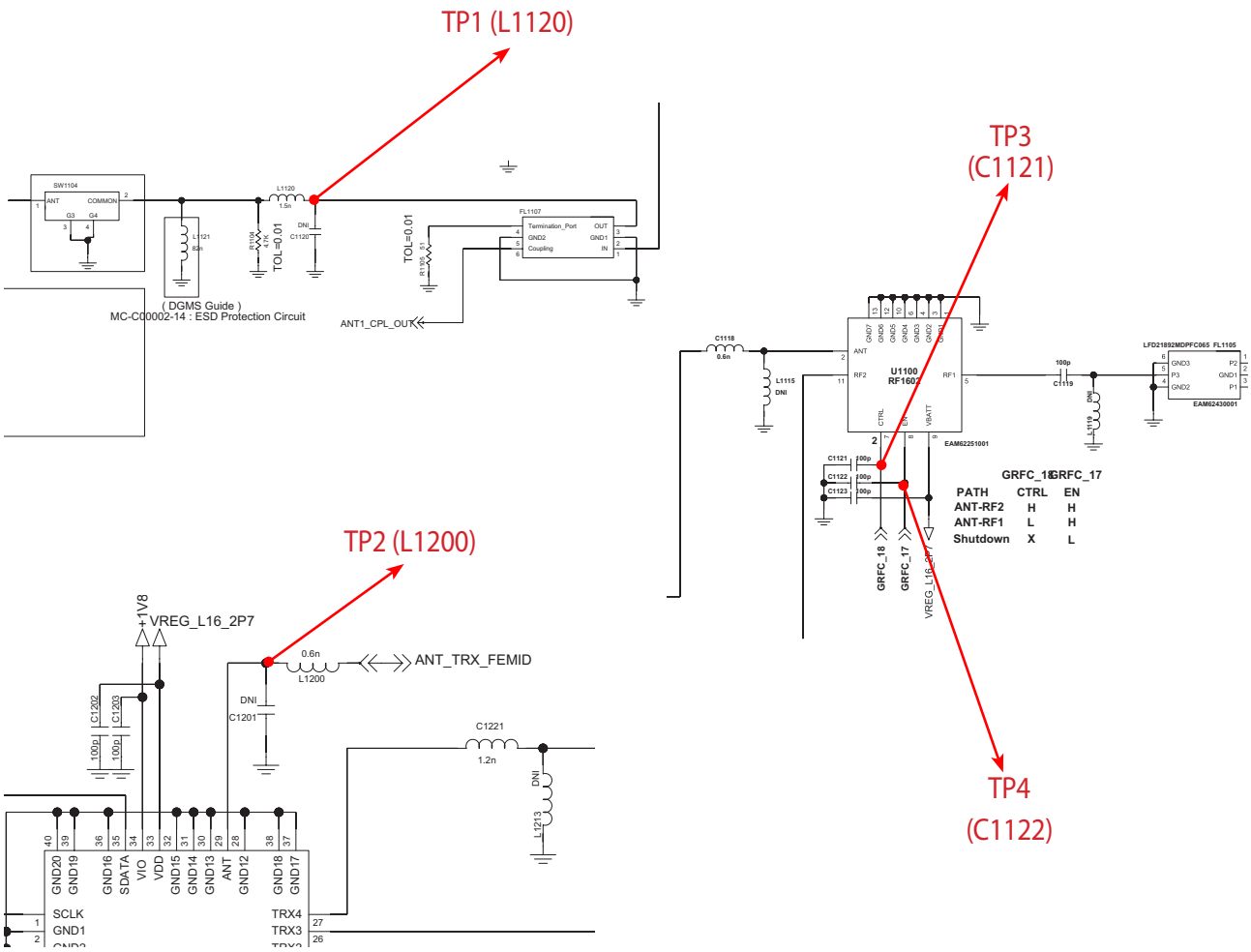

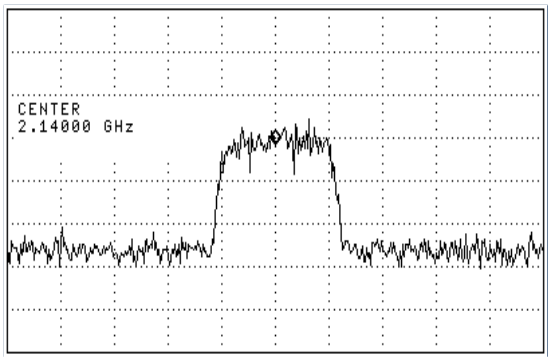

Figure 3.1.1 (b)

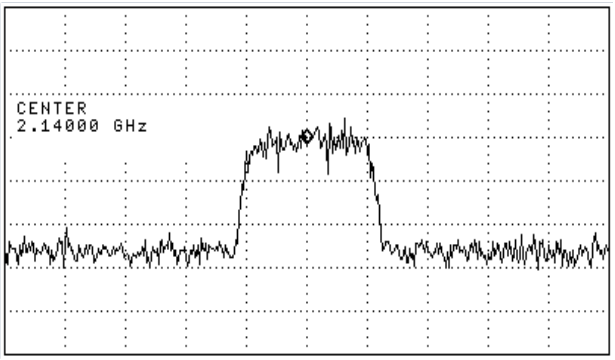

Figure 3.1.1 (c)

3.2.1.4 Checking RF Signal Path (FEM)

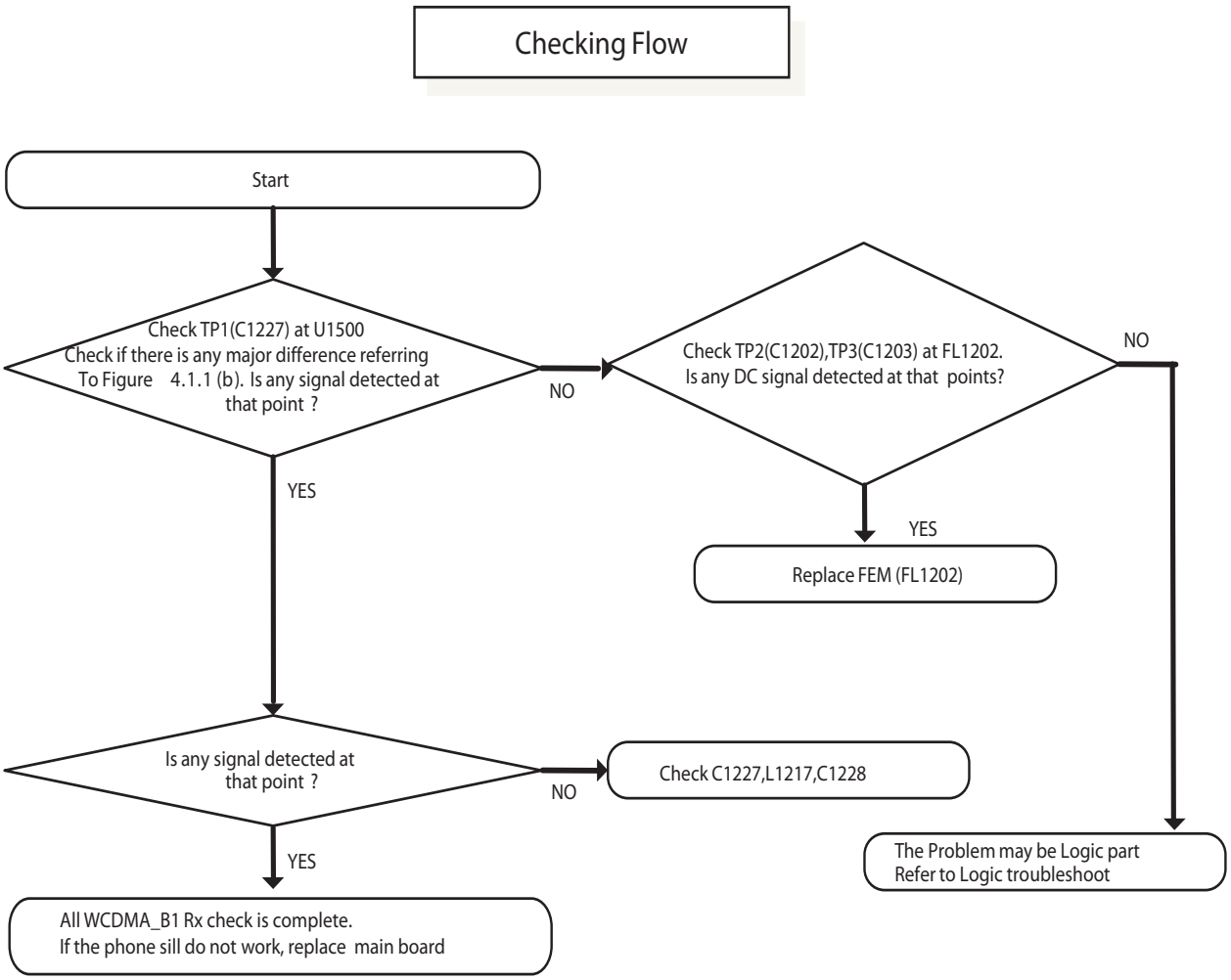

3.2.1.4 Checking RF Signal Path (FEM)

Test Point

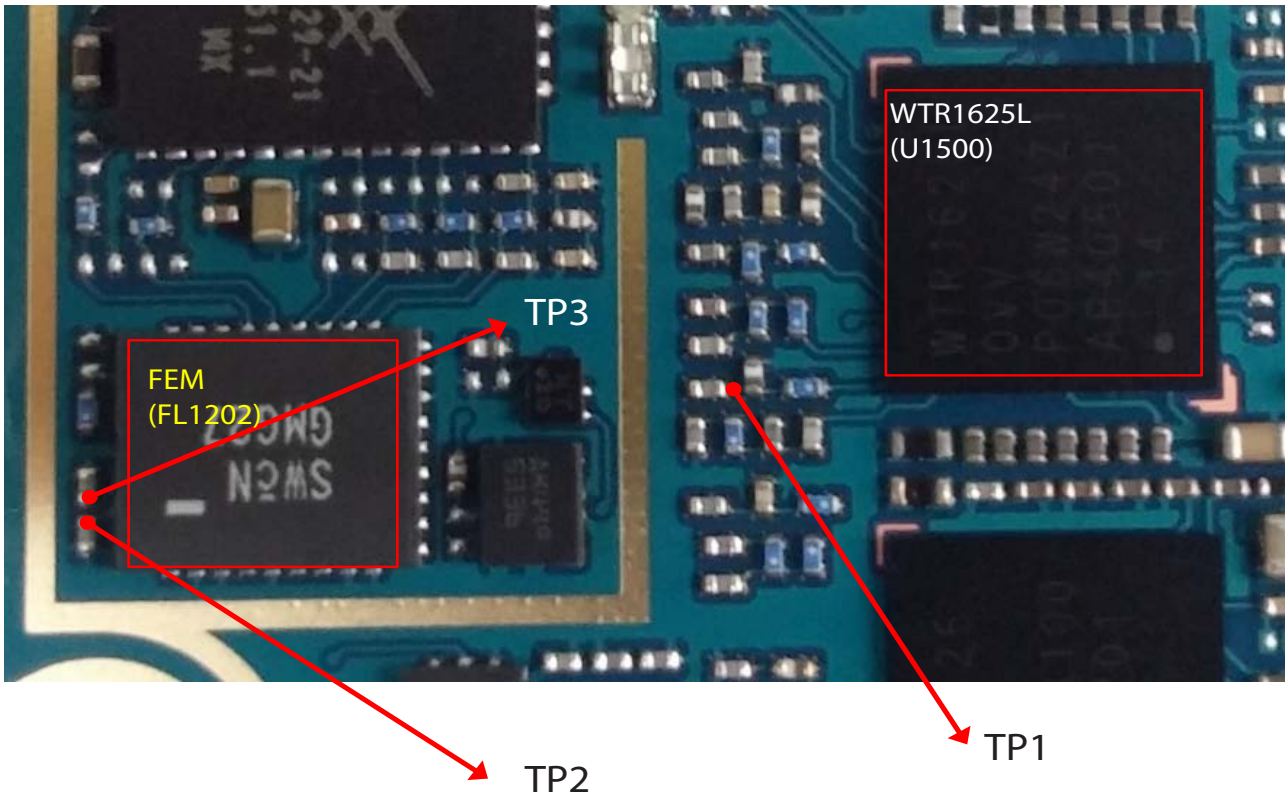

3.2.1.4 Checking RF Signal Path (FEM)

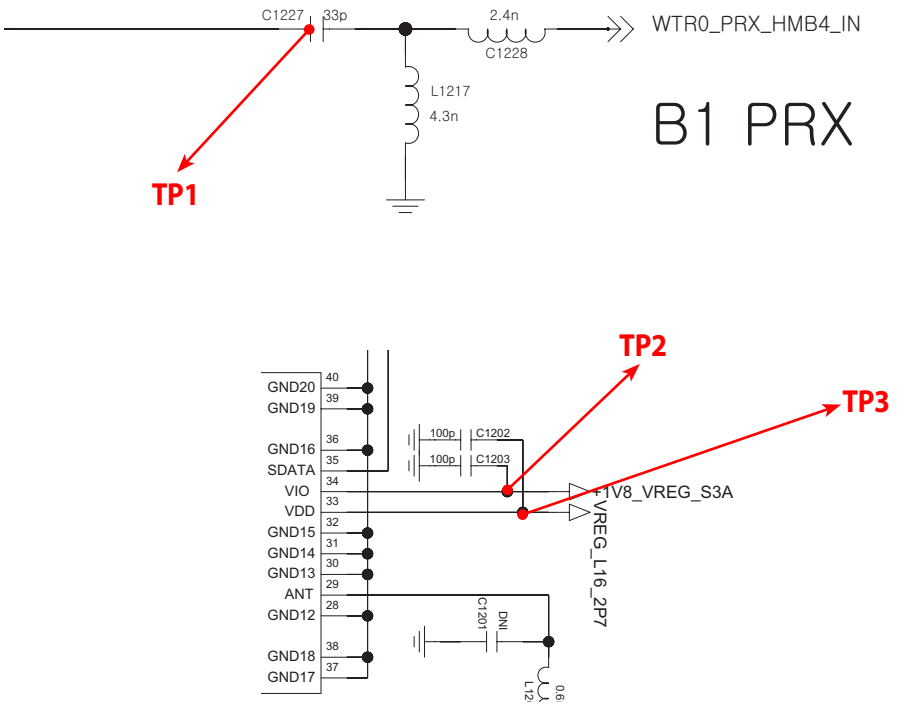

Waveform

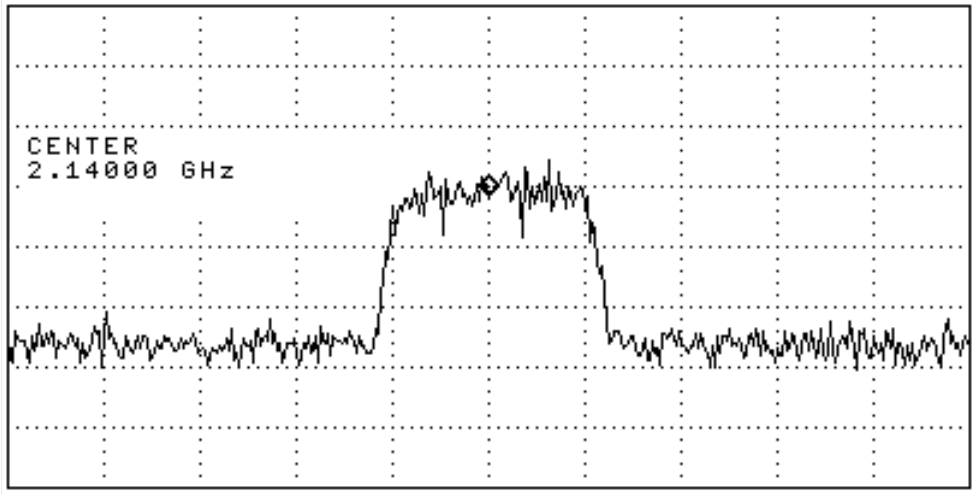

Figure 3.1.1 (b)

3.2.2 WCDMA_B2 Rx

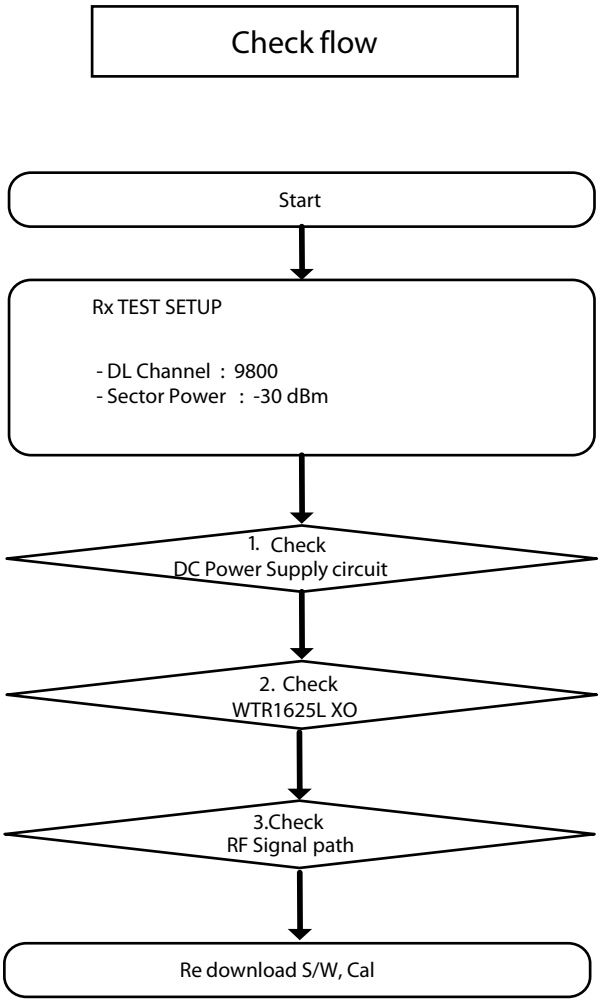

※ there are no Test Points on the IQ Data Line. So It is impossible to check the IQ Data Wave form

3.2.2 WCDMA_B2 Rx

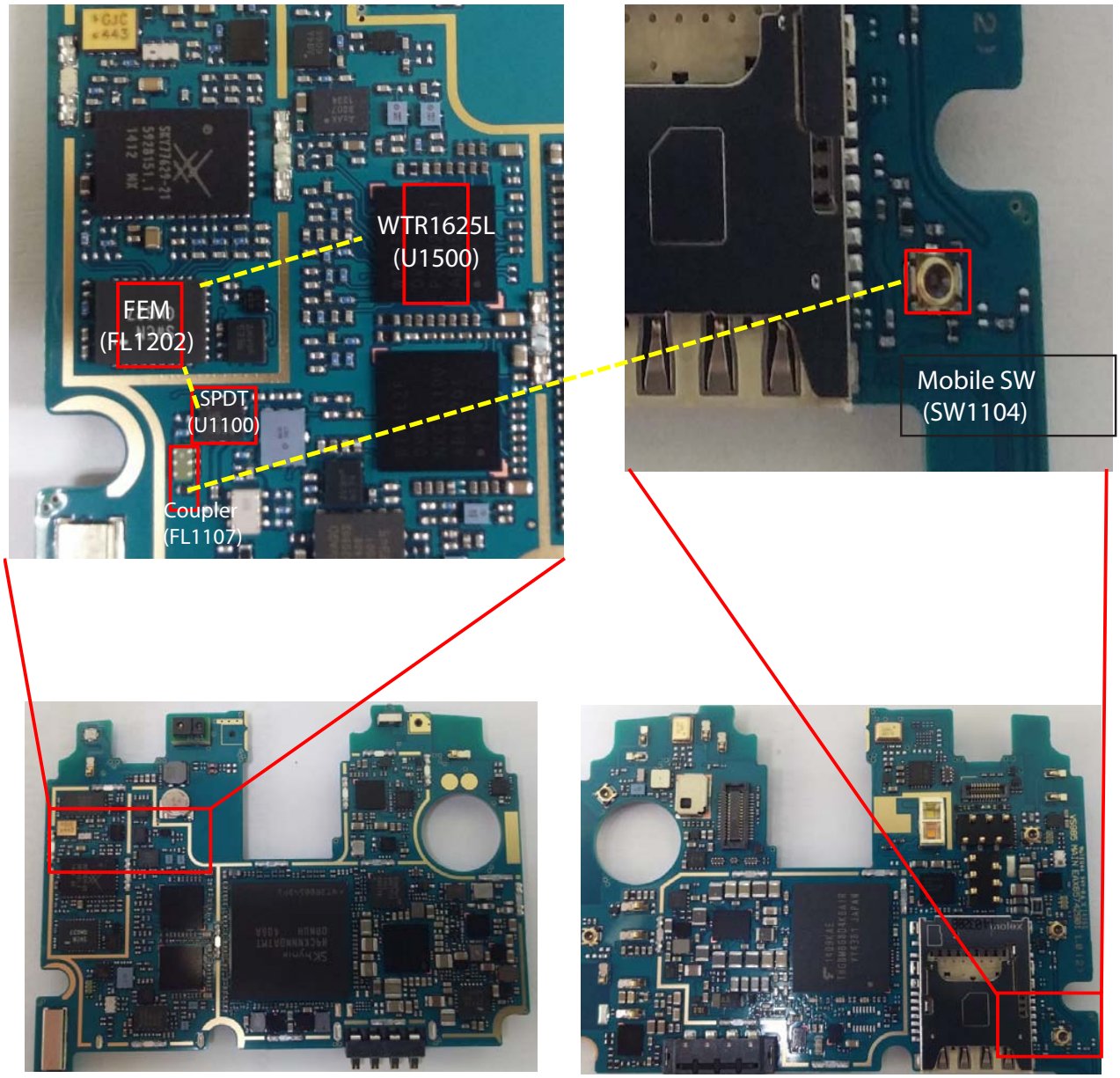

< AS985 _Main PCB_Top>

< AS985 _Main PCB_Bottom>

3.2.2.1 Checking DC Power Supply Circuit

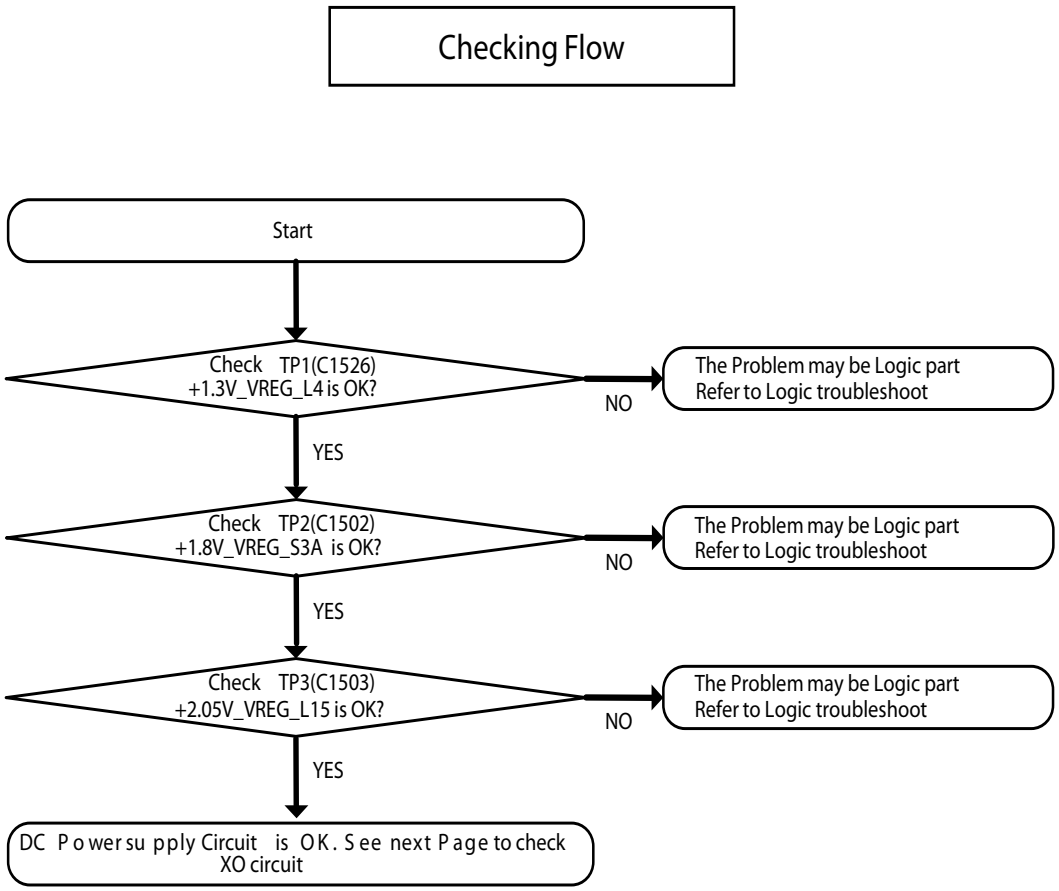

3.2.2.1 Checking DC Power Supply Circuit (+1.3V_VREG_L4 / +1.8V_VREG_S3A)

TP2 : C1502
(+1.8V_VREG_S3A)

TP1 : C1526
(+1.3V_VREG_L4)

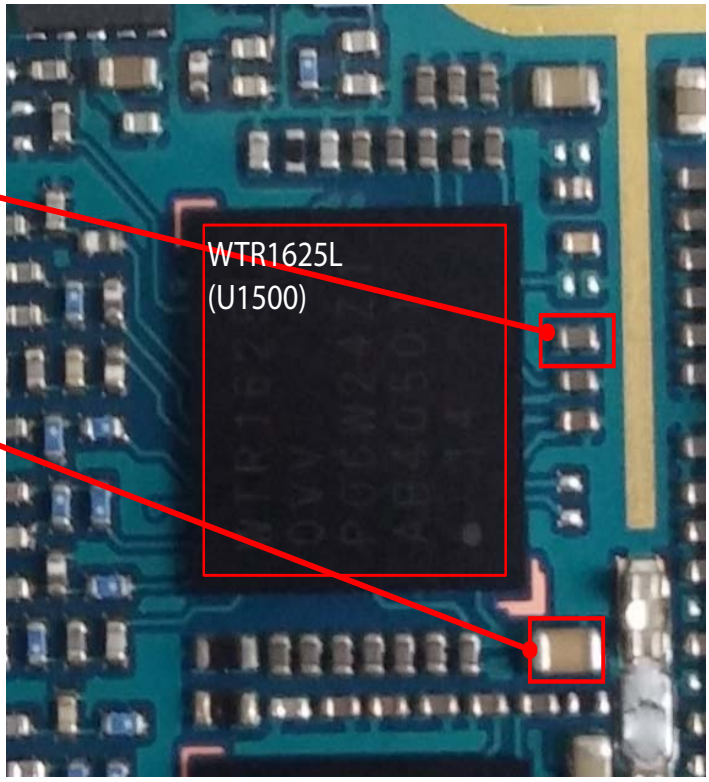

Top Side

Circuit Diagram

+1.3V_VREG_L4 / +1.8V_VREG_S3A

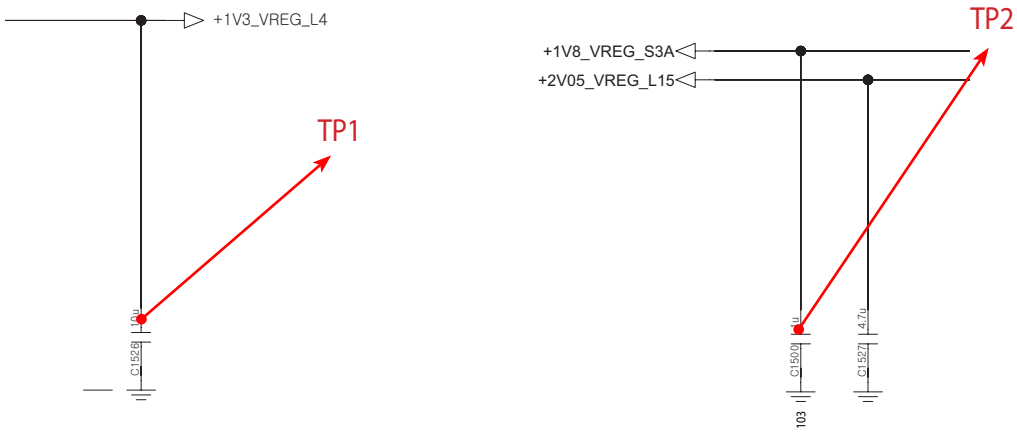

3.2.2.1 Checking DC Power Supply Circuit (+2.05V_VREG_L15)

Test Point

TP3 : C1503
(+2.05V_VREG_L15)

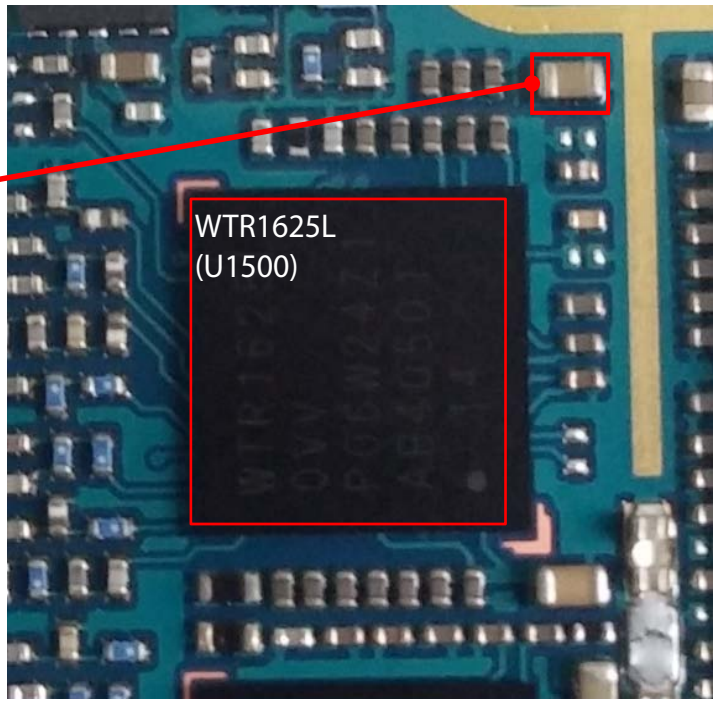

Top Side

Circuit Diagram

+2.05V_VREG_L15

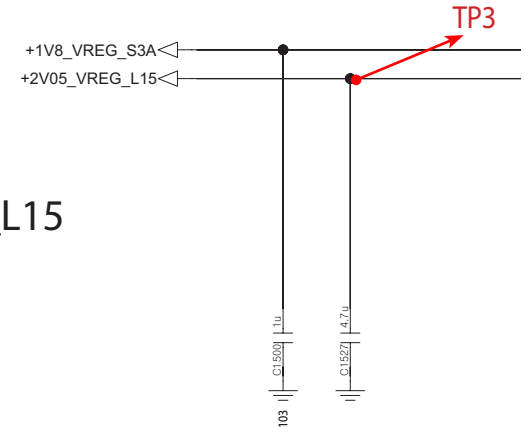

3.2.2.2 Checking WTR1625L XO Circuit

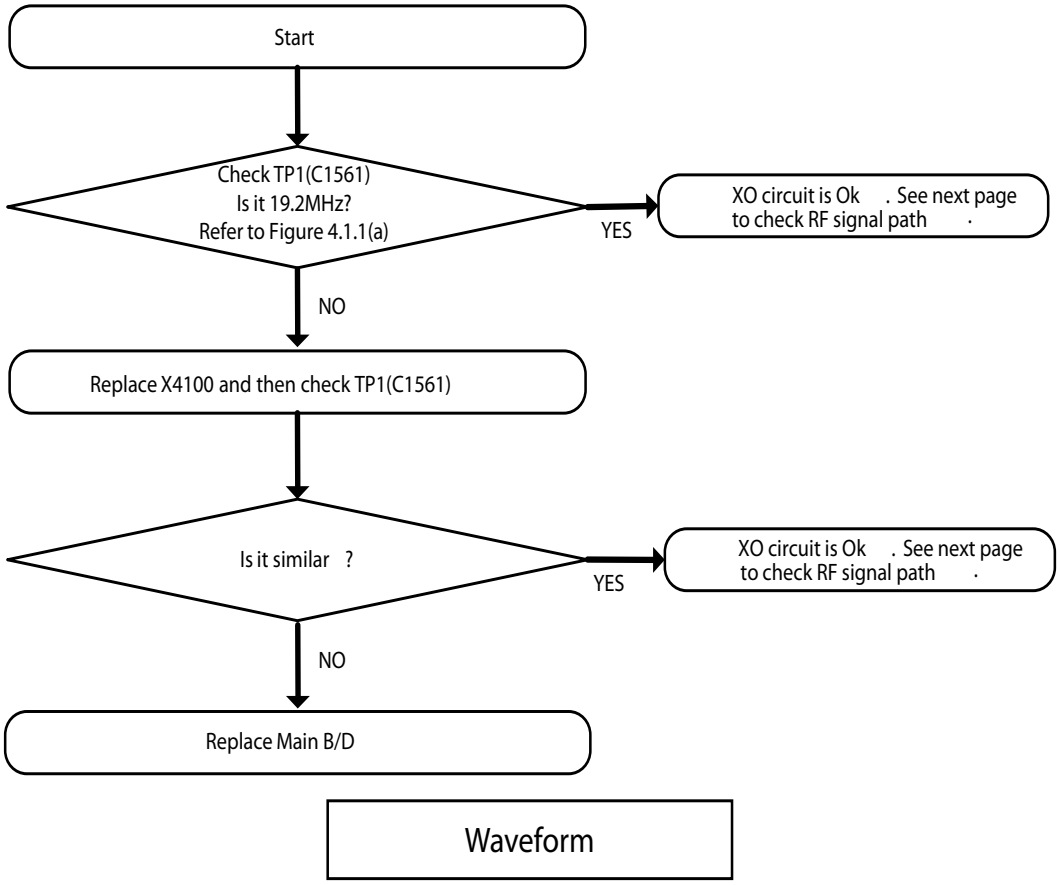

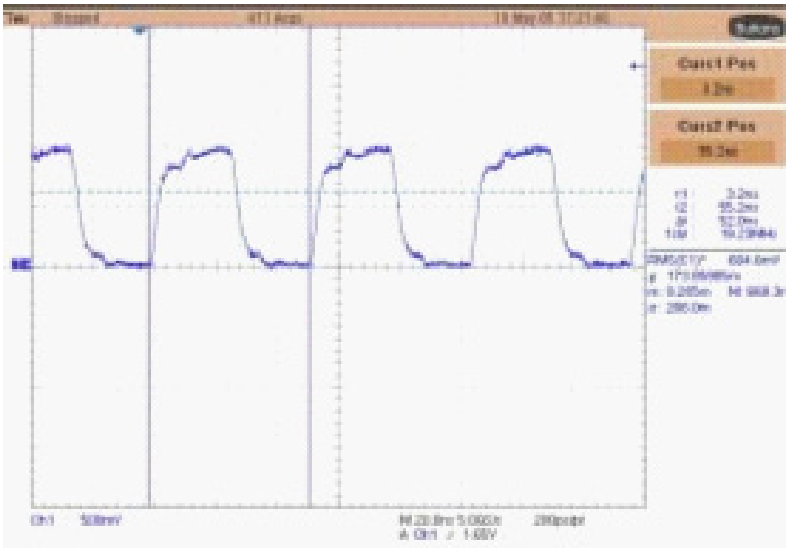

Figure 3.1.1 (a)

3.2.2.2 Checking WTR1625L XO Circuit

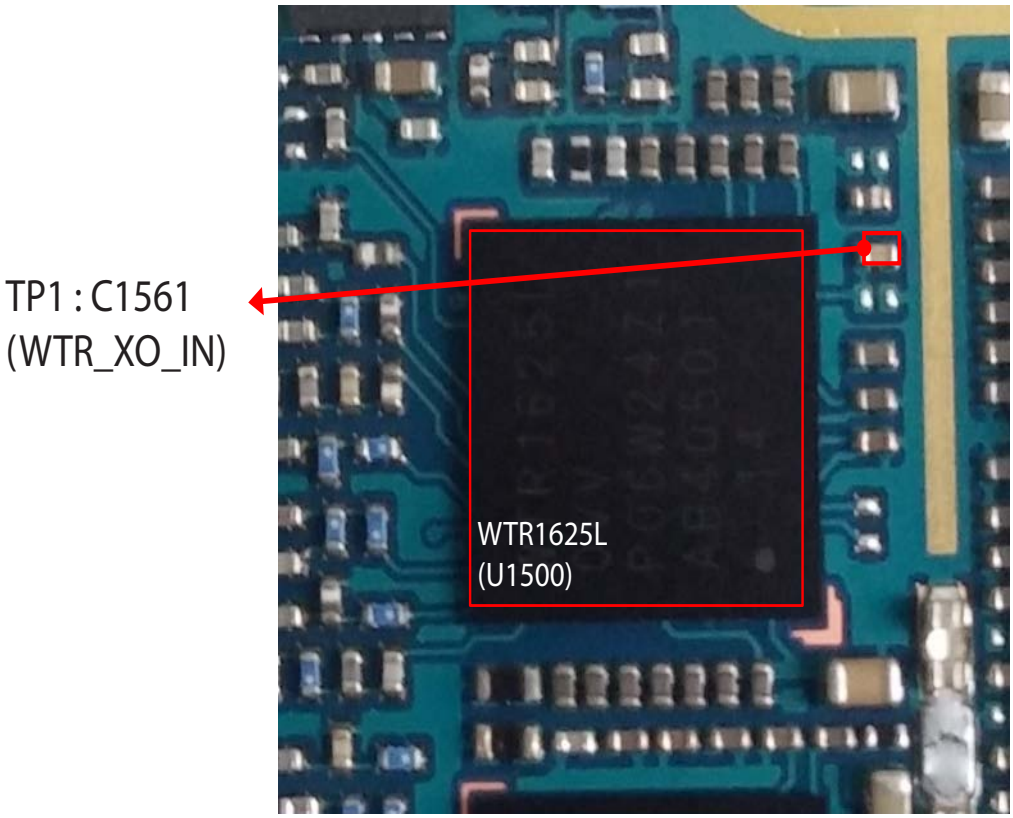

Circuit Diagram

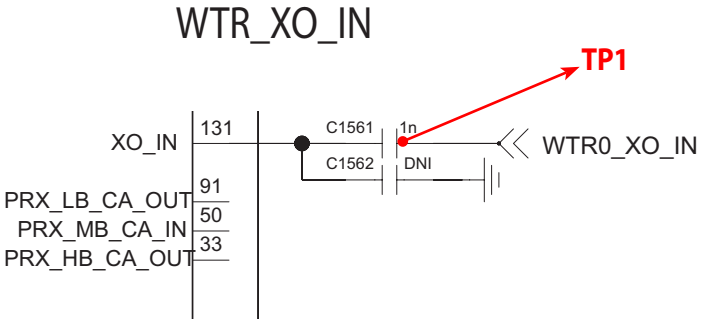

3.2.2.2 Checking WTR1625L XO Circuit

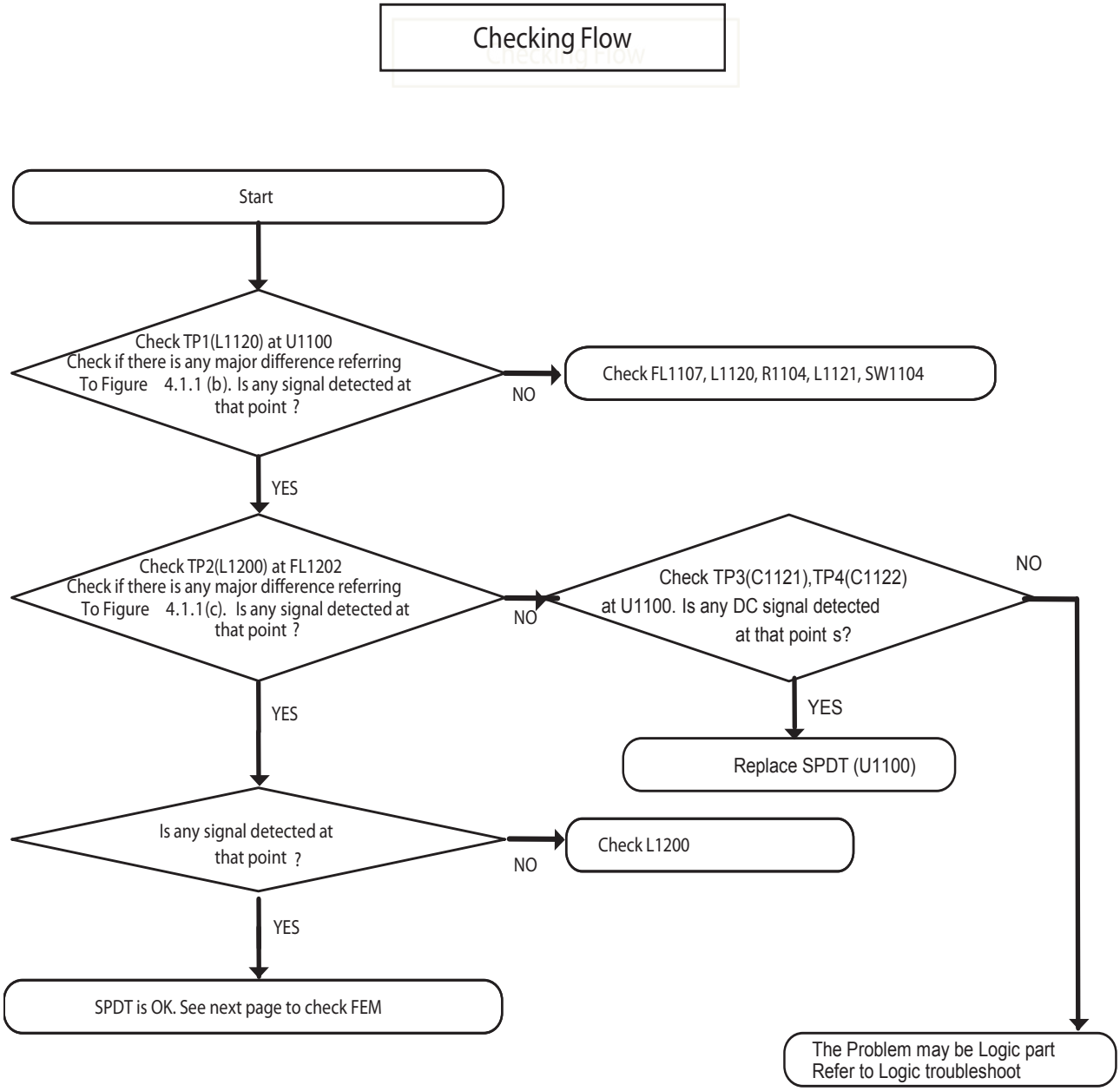

3.2.2.3 Checking RF Signal Path (SPDT)

Test Point

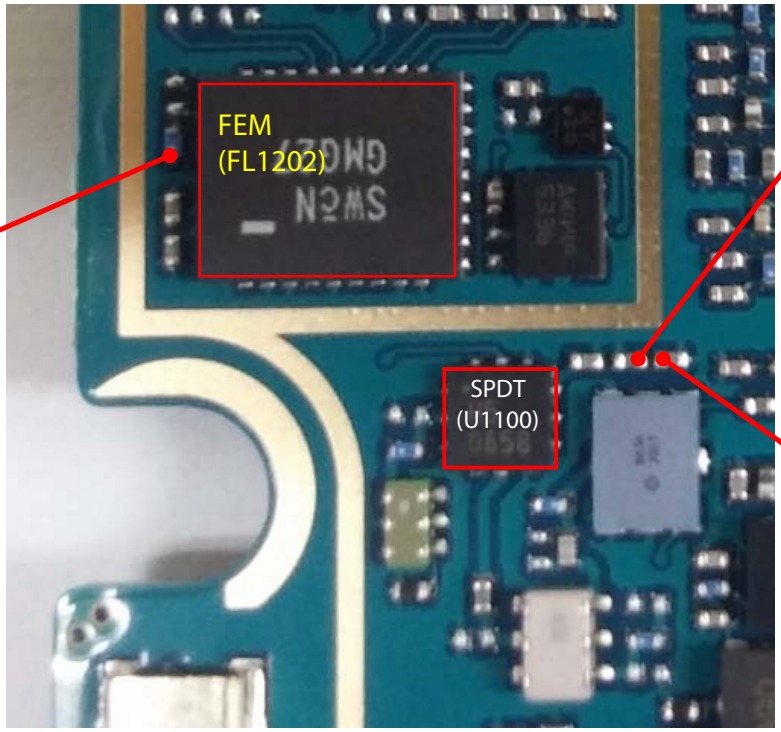

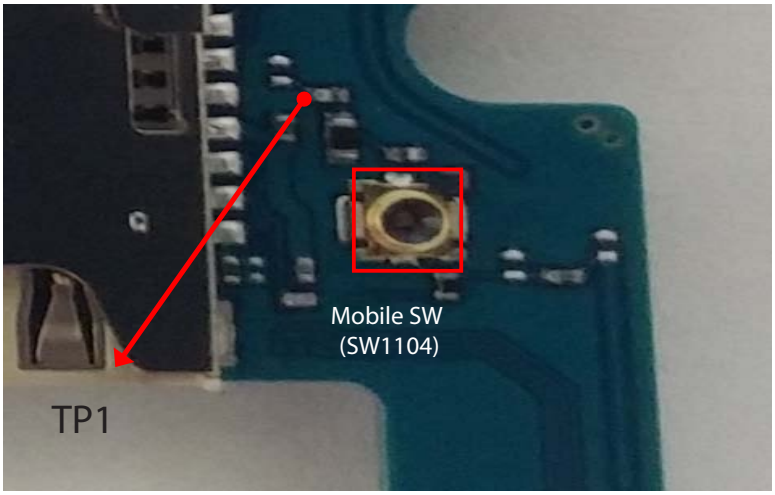

3.2.2.3 Checking RF Signal Path (SPDT)

Circuit Diagram

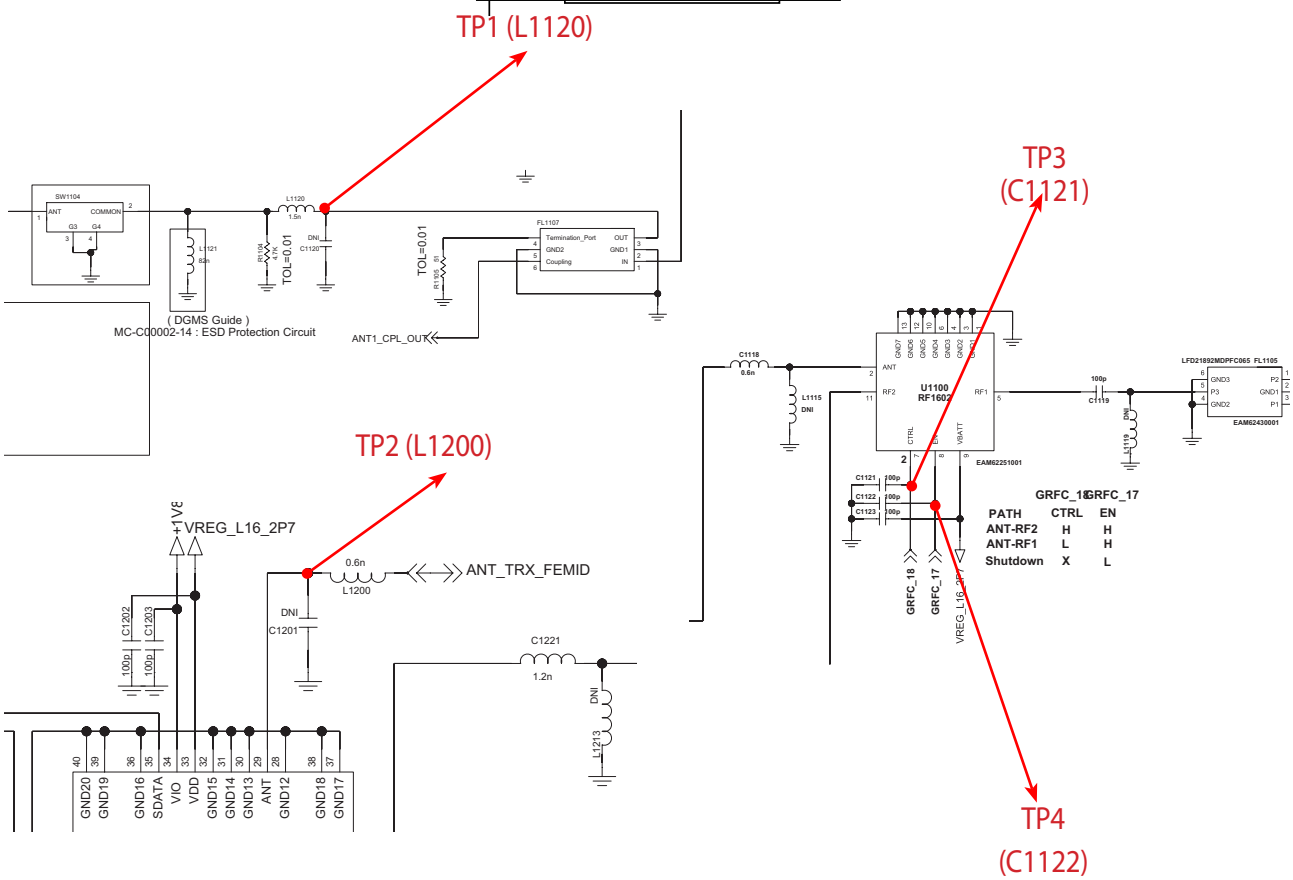

Waveform

Figure 3.1.1 (b)

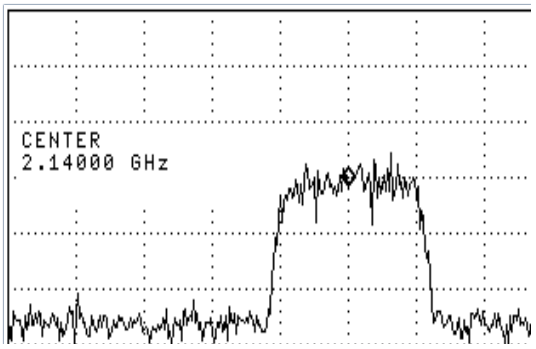

Figure 3.1.1 (c)

3.2.2.4 Checking RF Signal Path (FEM)

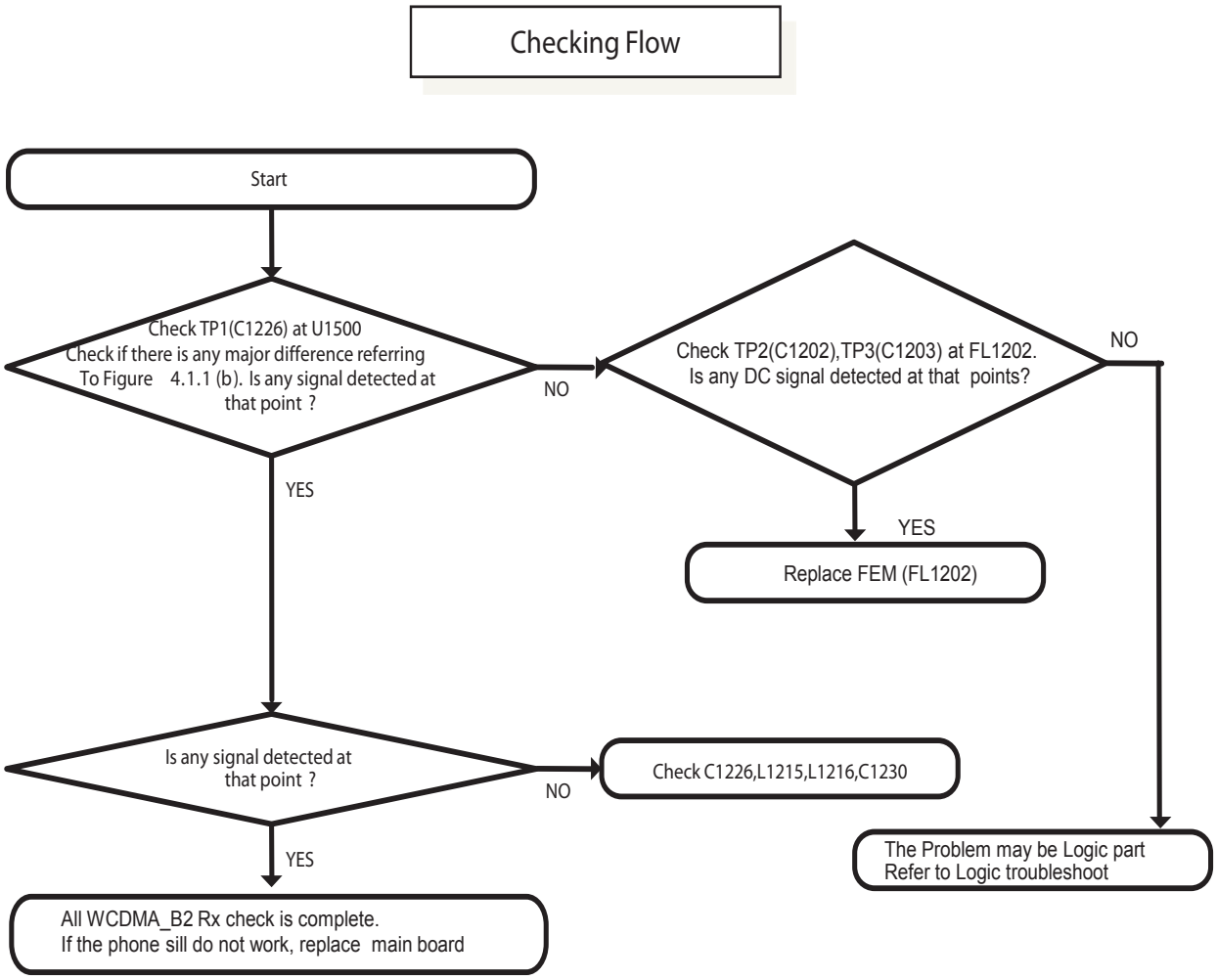

3.2.2.4 Checking RF Signal Path (FEM)

Test Point

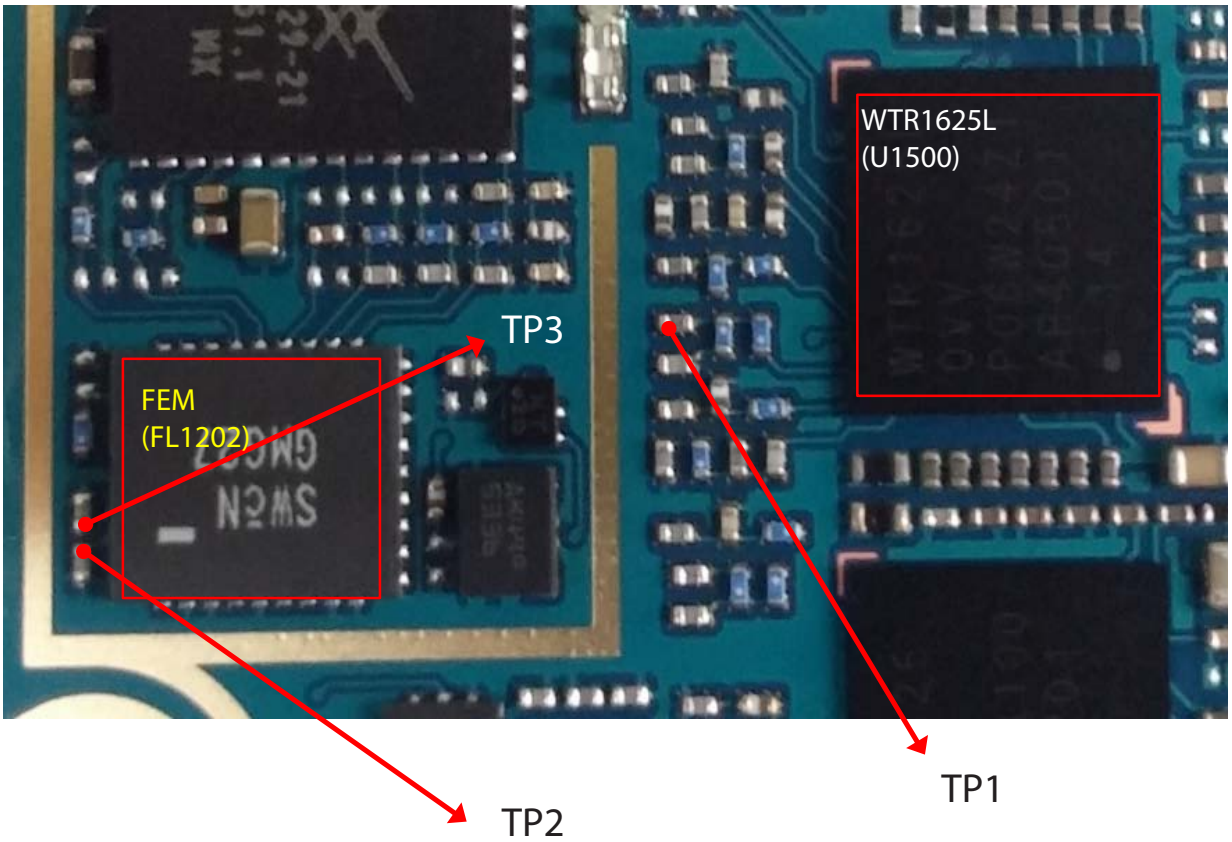

3.2.2.4 Checking RF Signal Path (FEM)

Circuit Diagram

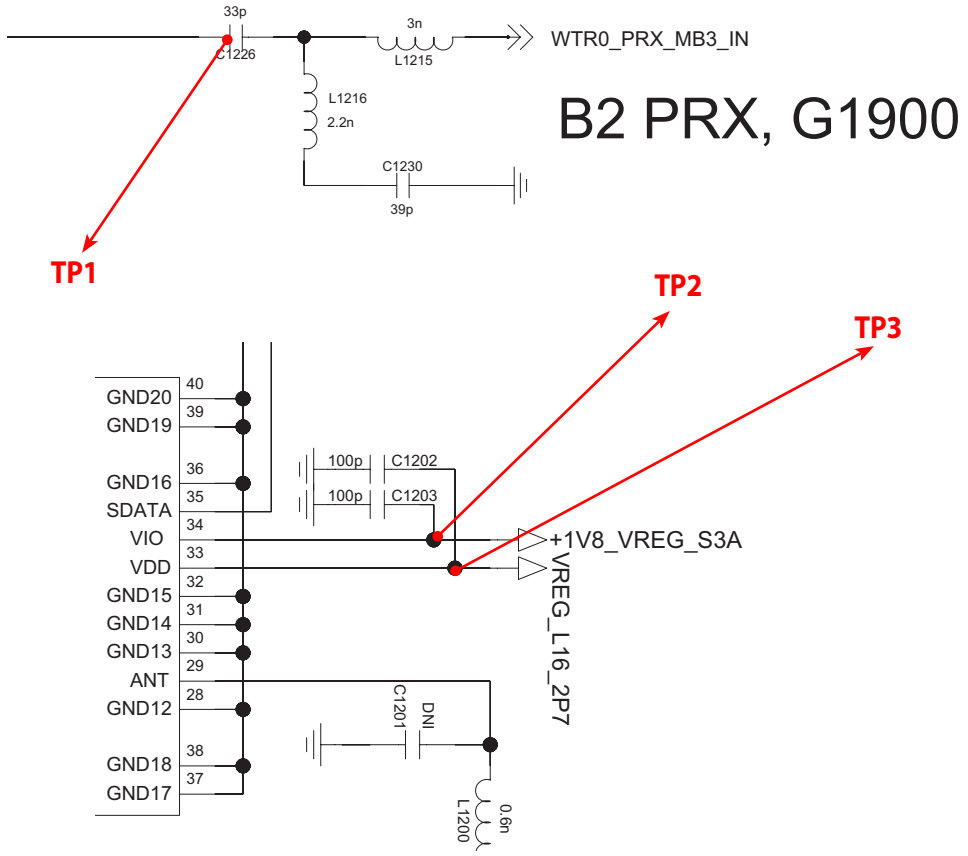

Waveform

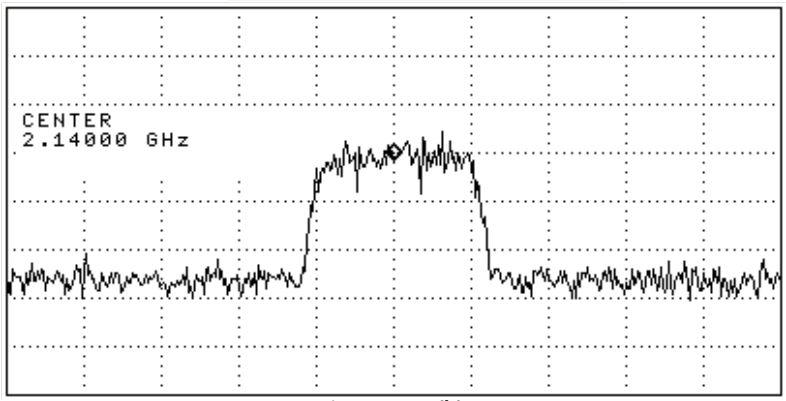

Figure 3.1.1 (b)

3.2.3 WCDMA_B5 Rx

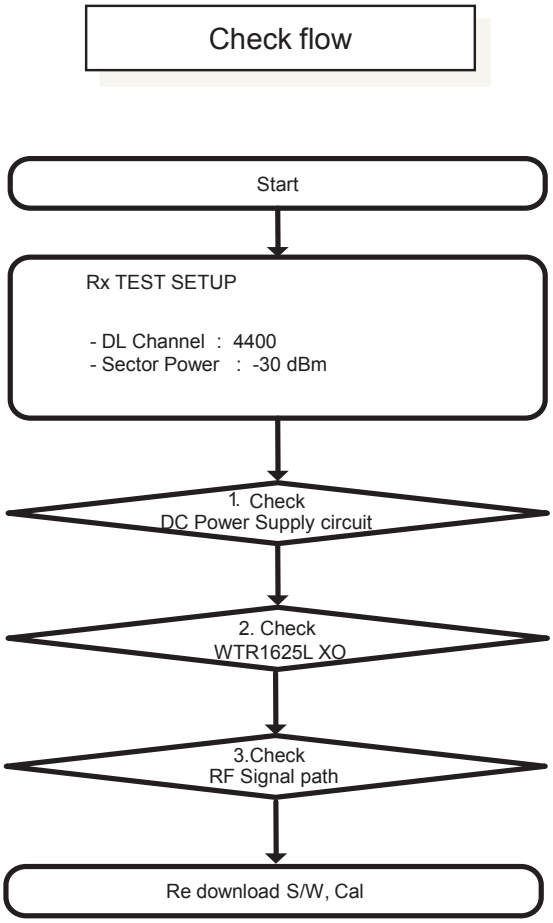

※ there are no Test Points on the IQ Data Line. So It is impossible to check the IQ Data Wave form

3.2.3 WCDMA_B5 Rx

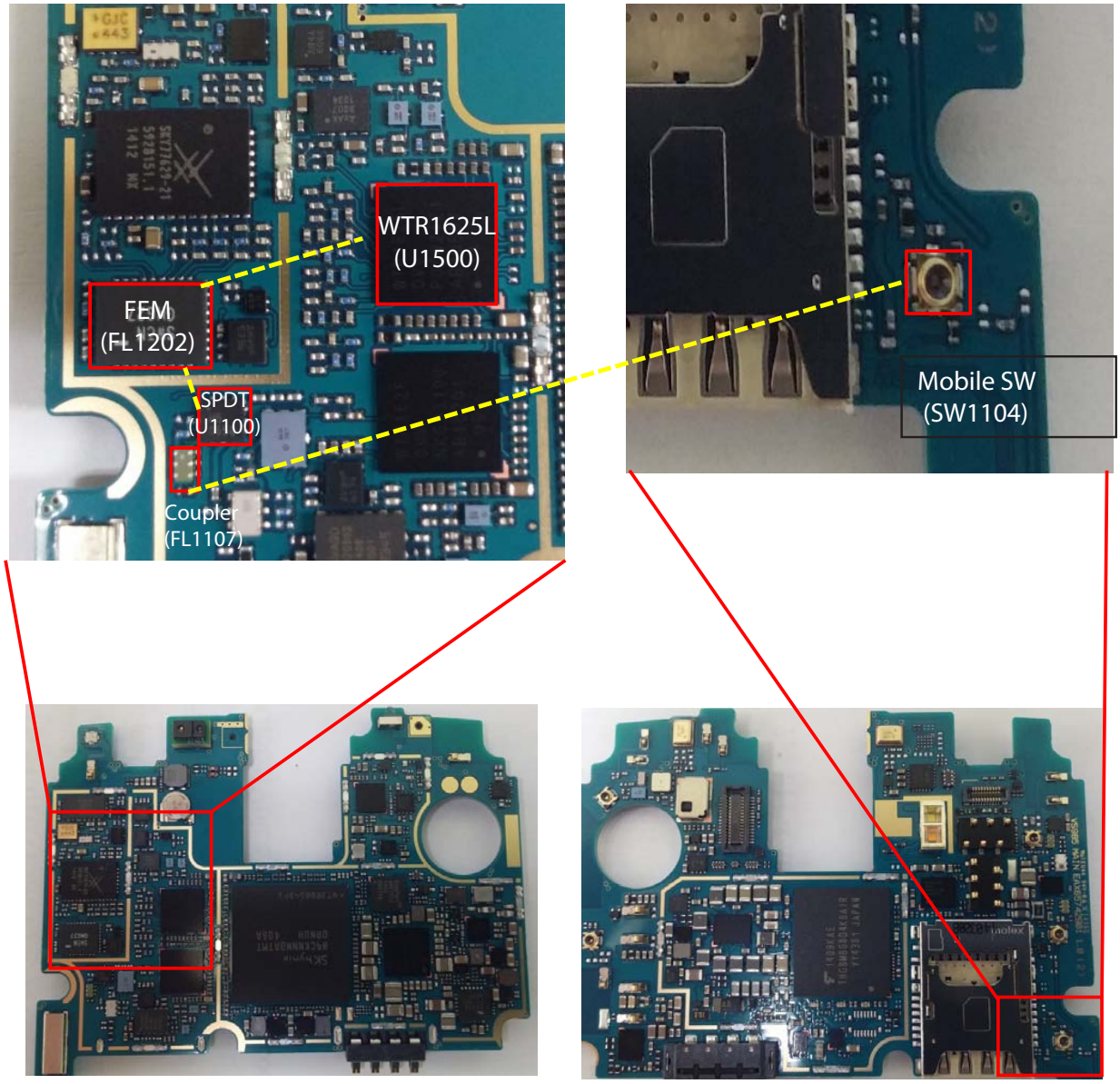

3.2.3.1 Checking DC Power Supply Circuit

Checking Flow

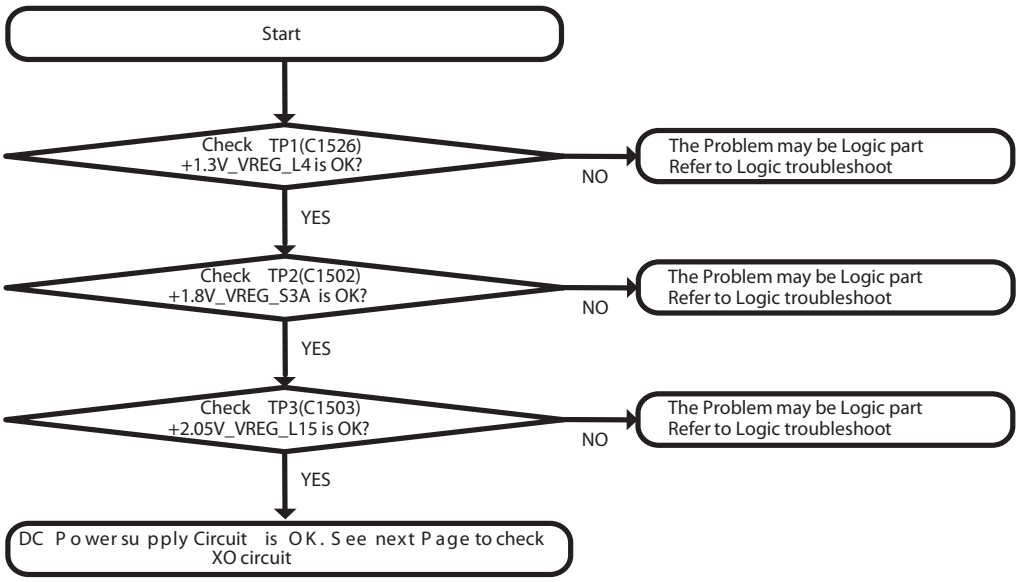

3.2.3.1 Checking DC Power Supply Circuit (+1.3V_VREG_L4 / +1.8V_VREG_S3A)

Test Point

TP2 : C1502
(+1.8V_VREG_S3A)

TP1 : C1526
(+1.3V_VREG_L4)

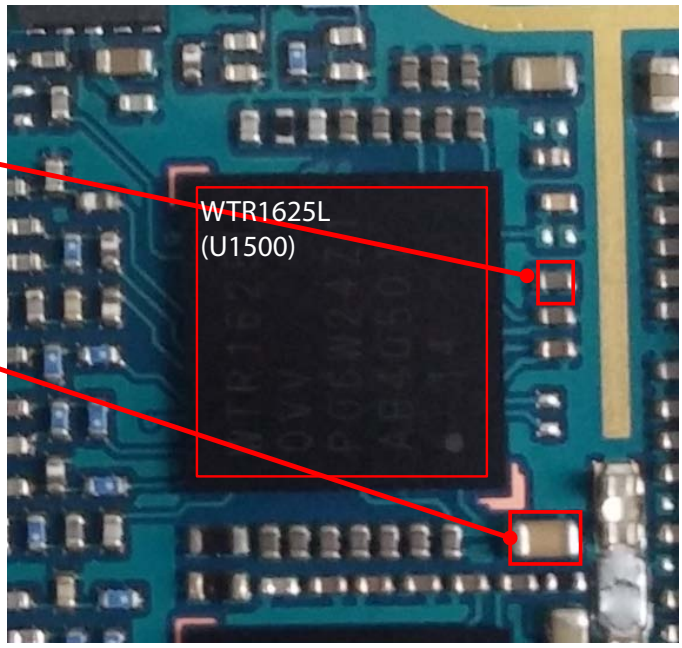

Top Side

Circuit Diagram

+1.3V_VREG_L4 / +1.8V_VREG_S3A

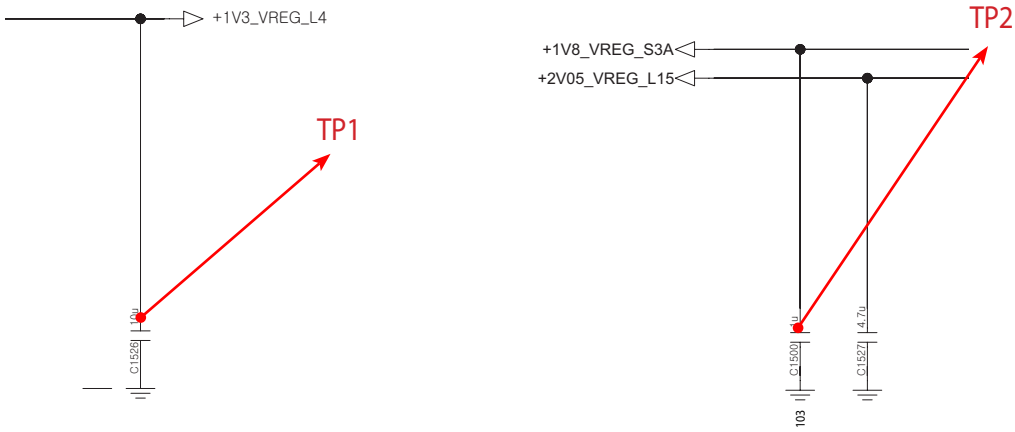

3.2.3.1 Checking DC Power Supply Circuit (+2.05V_VREG_L15)

Test Point

TP3 : C1503
(+2.05V_VREG_L15)

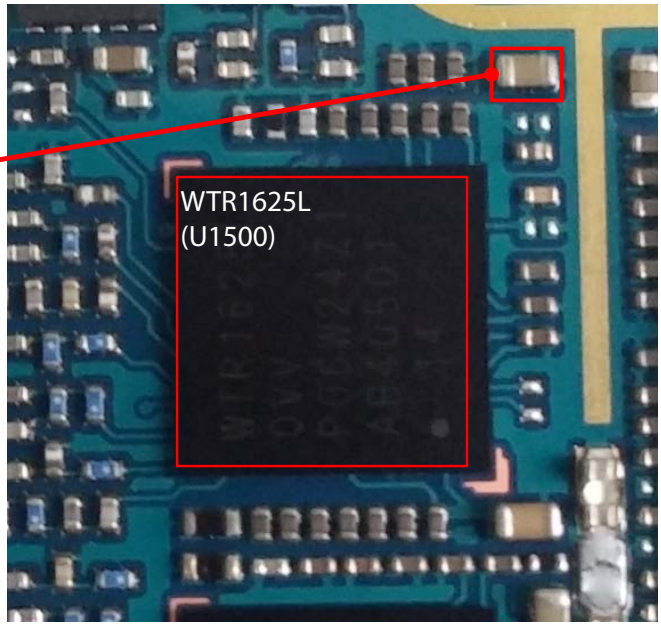

Top Side

Circuit Diagram

+2.05V_VREG_L15

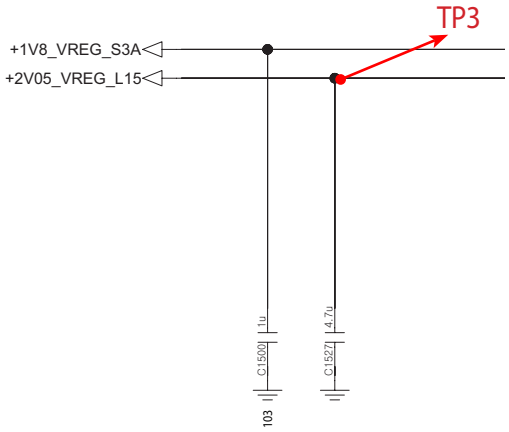

3.2.3.2 Checking WTR1625L XO Circuit

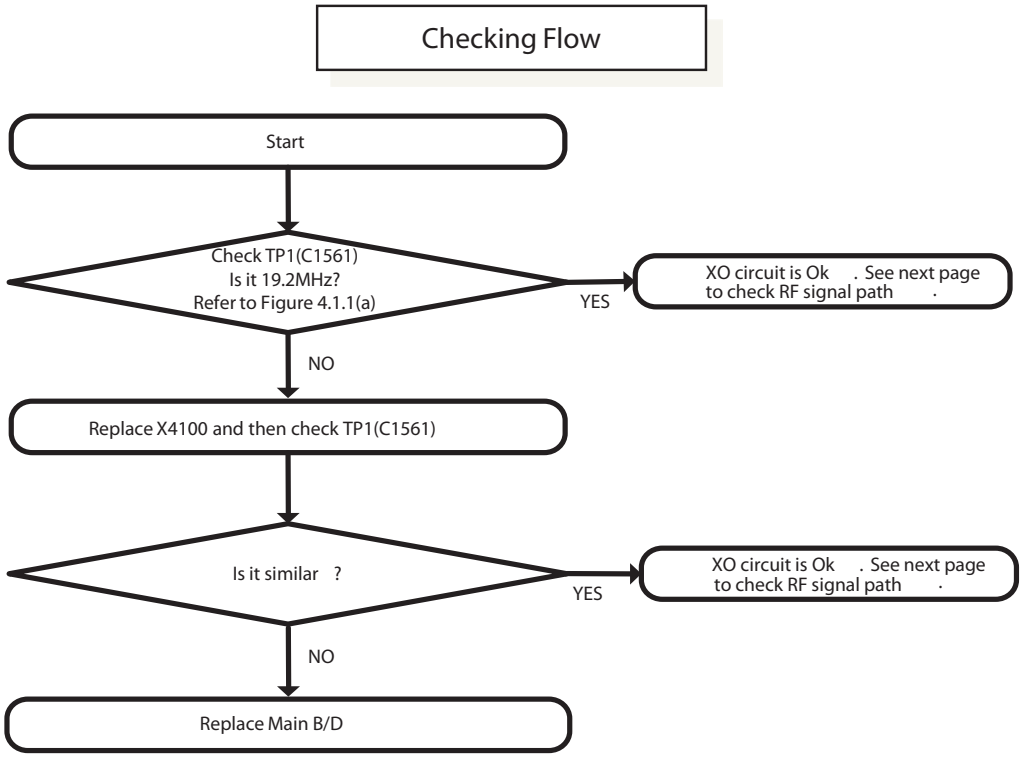

Waveform

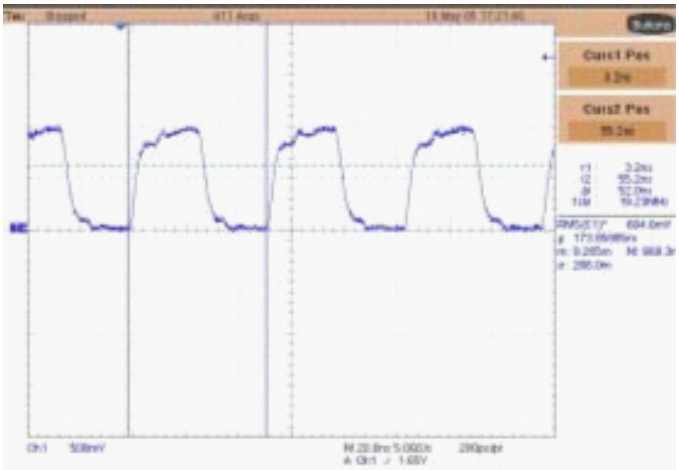

Figure 3.1.1 (a)

3.2.3.2 Checking WTR1625L XO Circuit

Test Point

TP1 : C1561
(WTR_XO_IN)

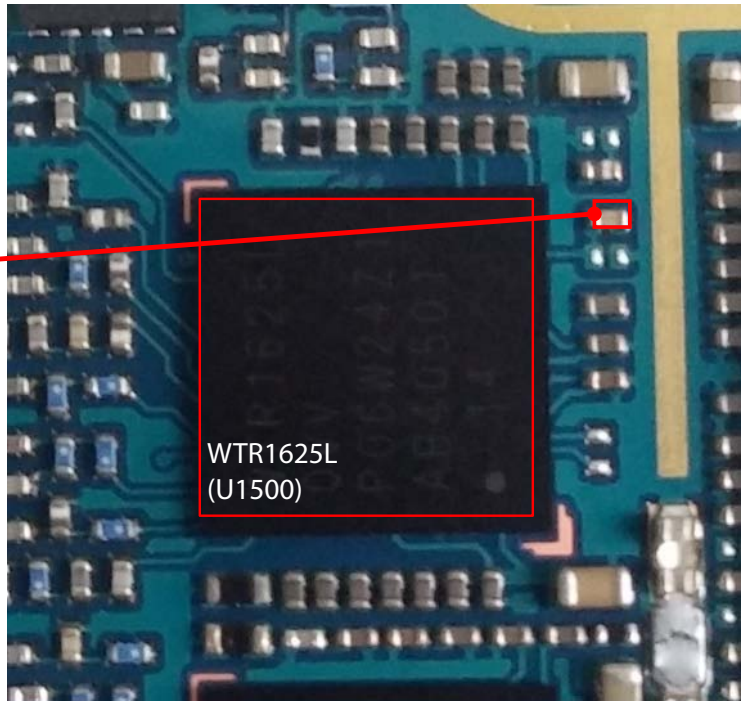

Circuit Diagram

WTR_XO_IN

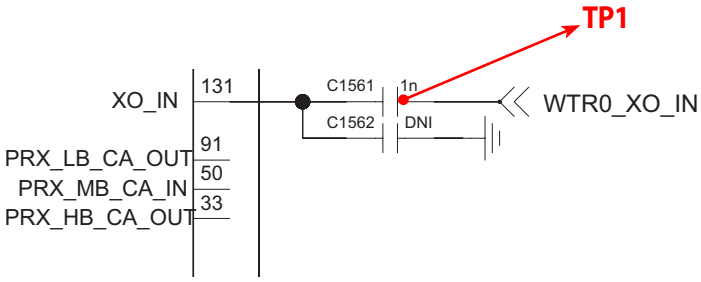

3.2.3.3 Checking RF Signal Path (SPDT)

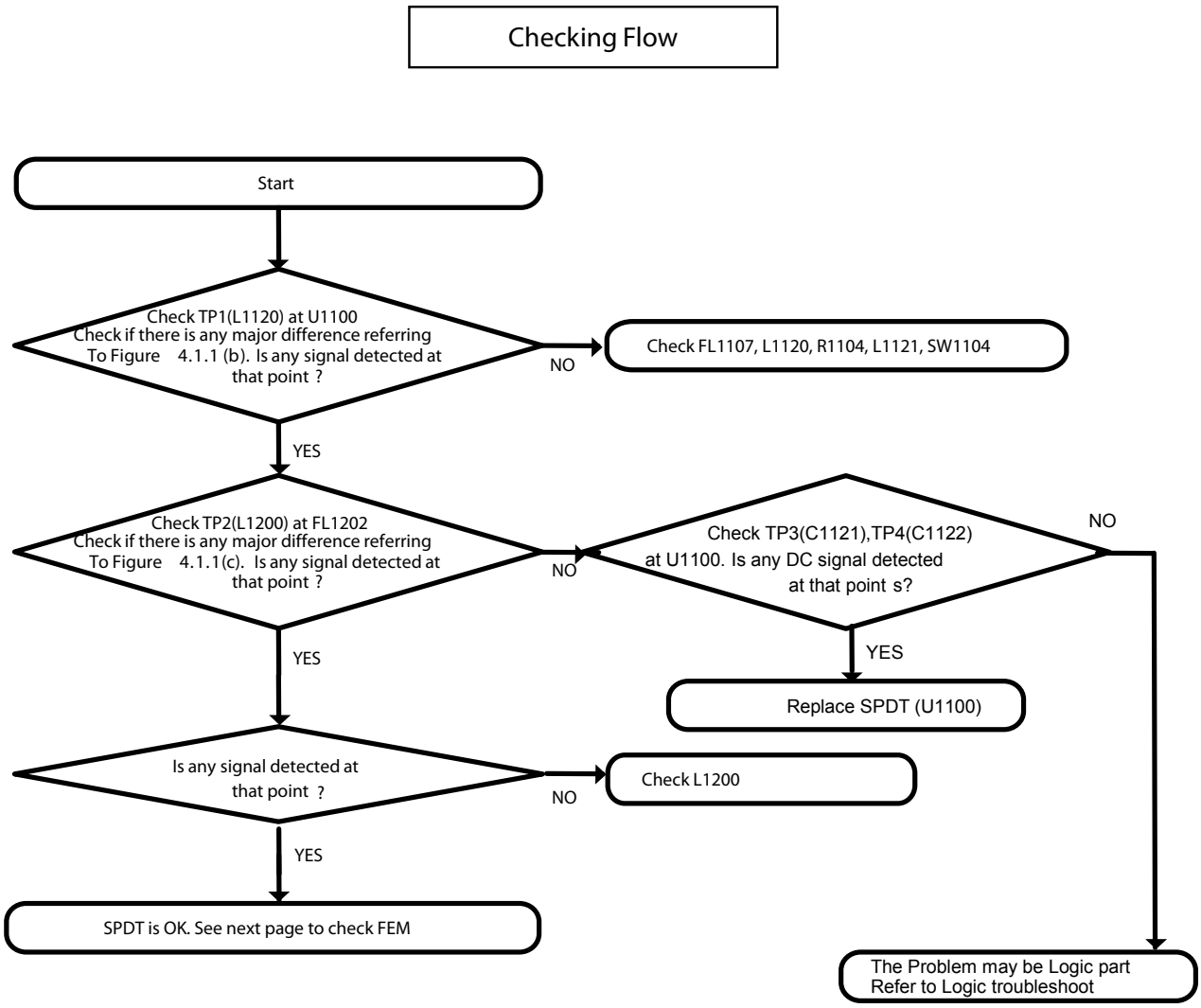

3.2.3.3 Checking RF Signal Path (SPDT)

Test Point

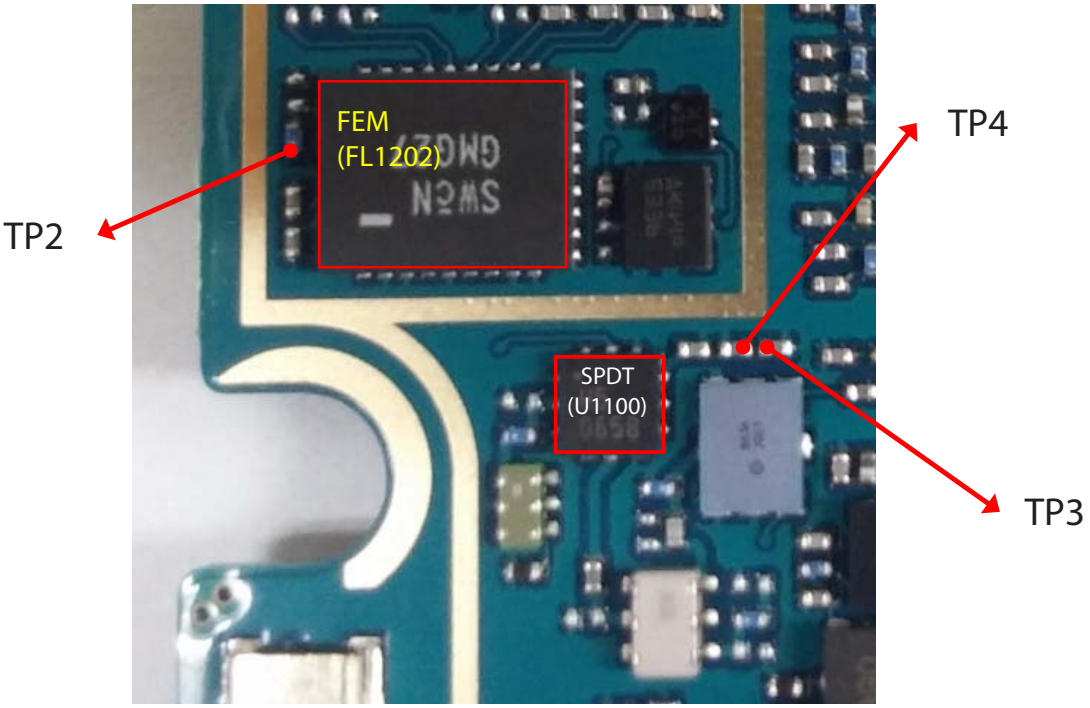

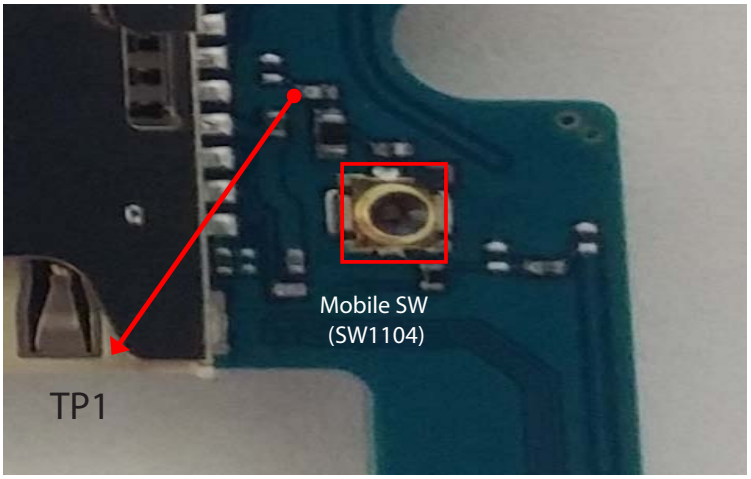

Circuit Diagram

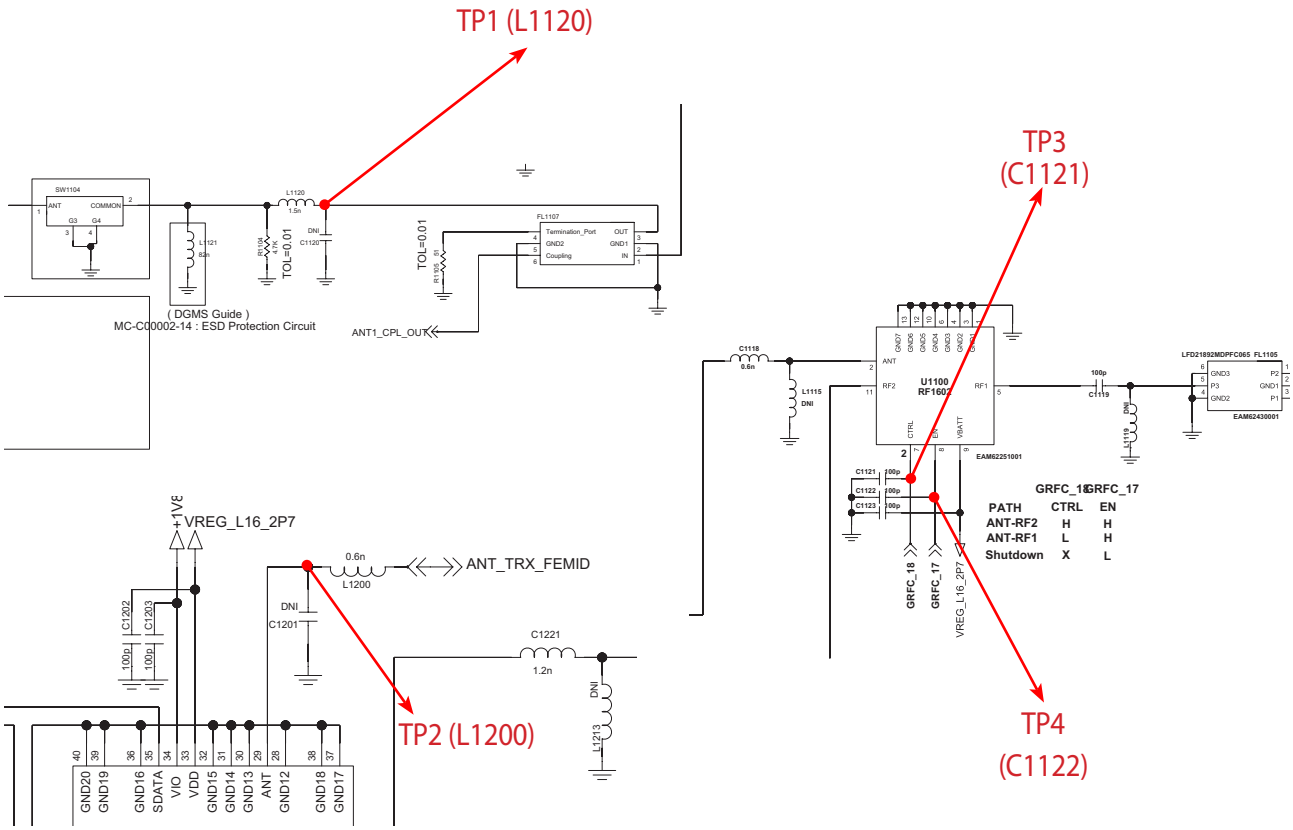

Waveform

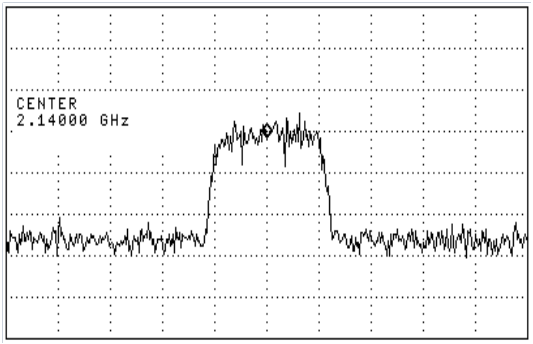

Figure 3.1.1 (b)

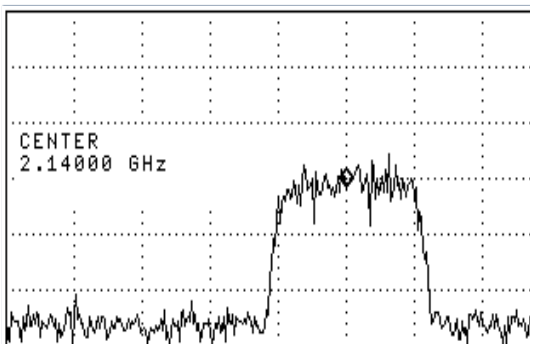

Figure 3.1.1 (c)

3.2.3.4 Checking RF Signal Path (FEM)

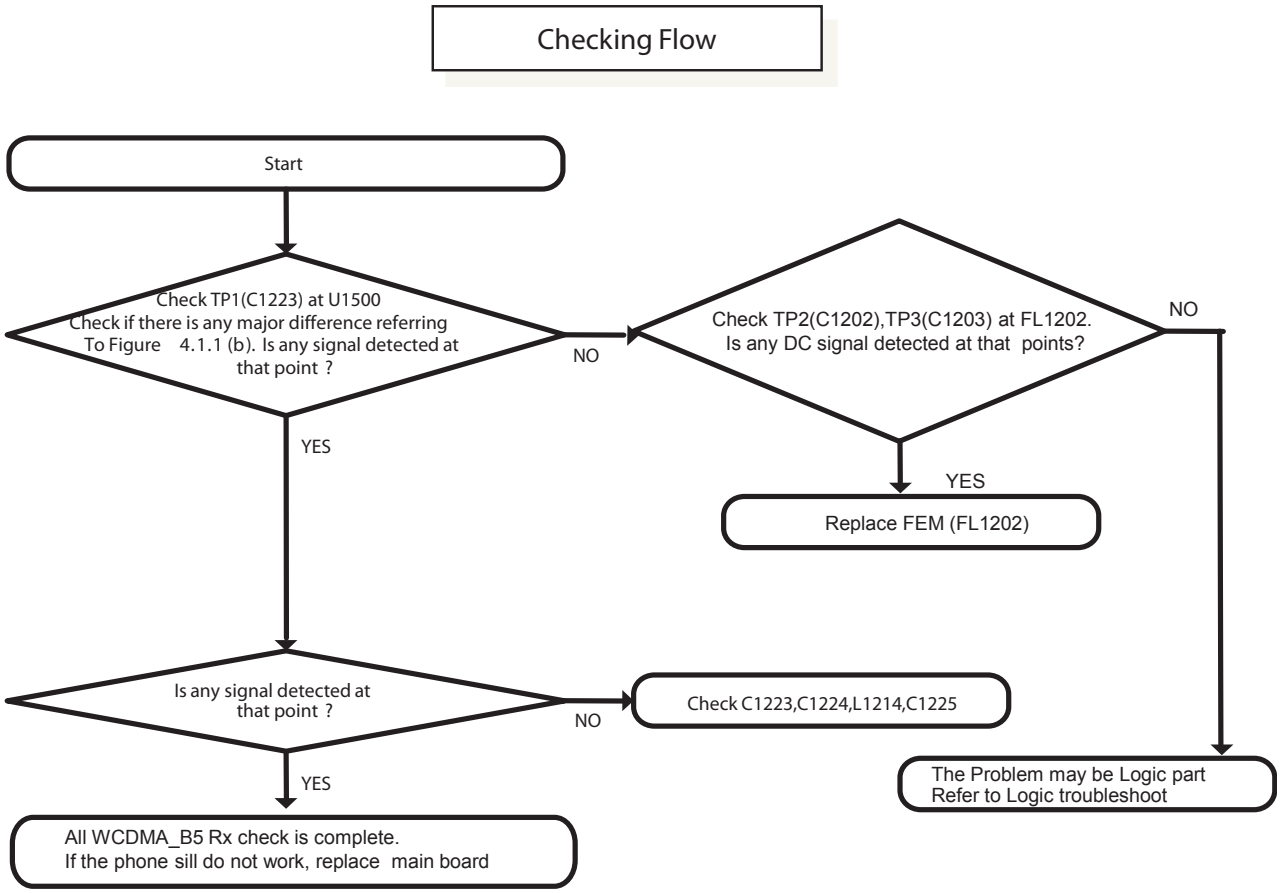

3.2.3.4 Checking RF Signal Path (FEM)

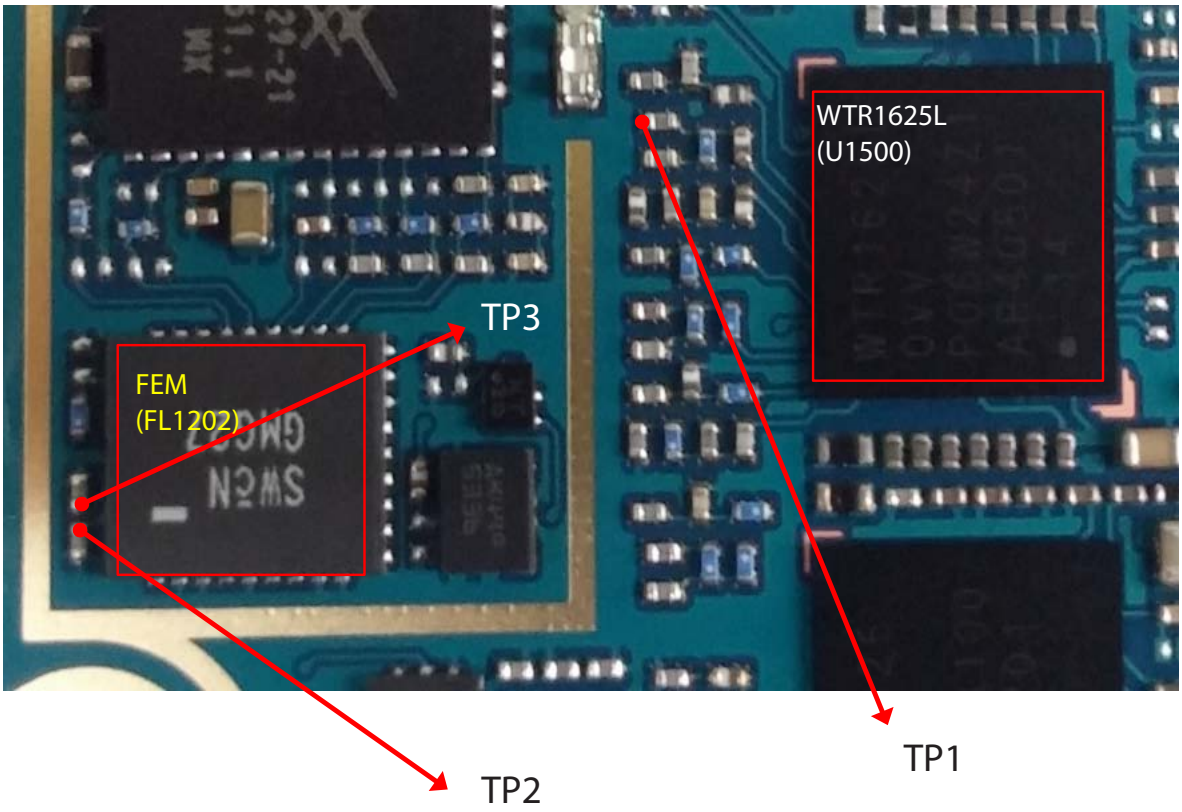

3.2.3.4 Checking RF Signal Path (FEM)

Circuit Diagram

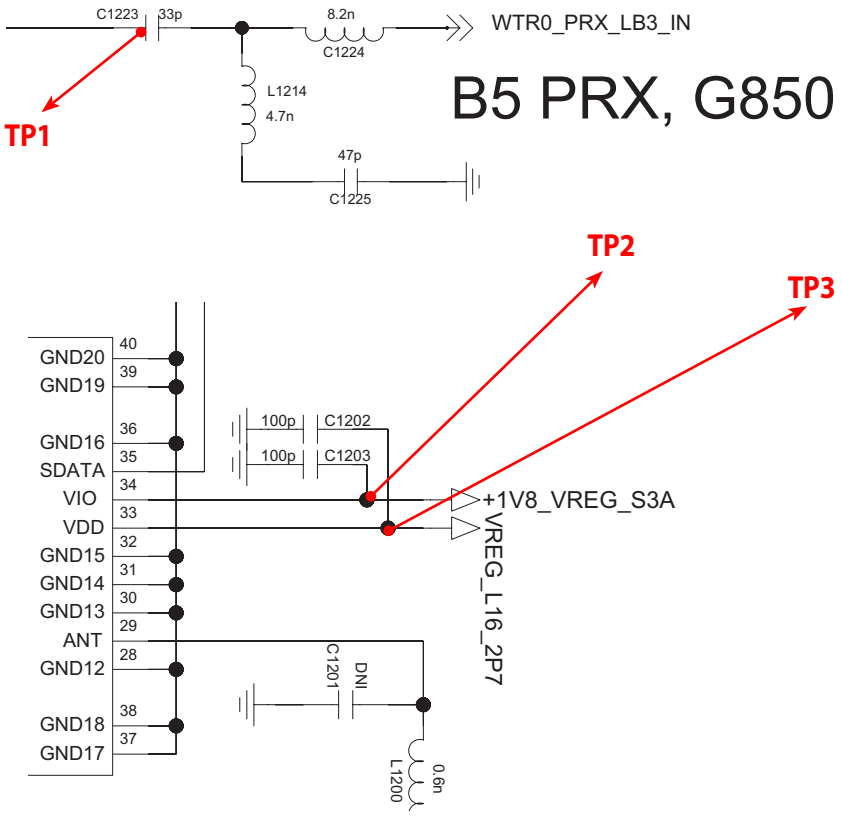

Waveform

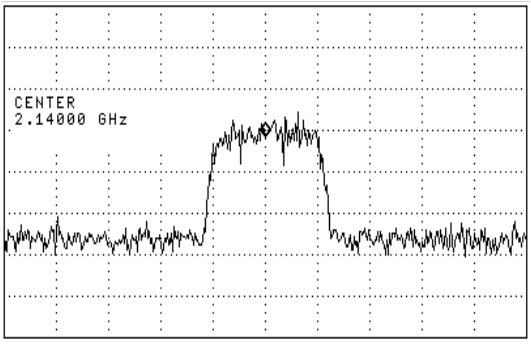

Figure 3.1.1 (b)

3.2.4 WCDMA_B8 Rx

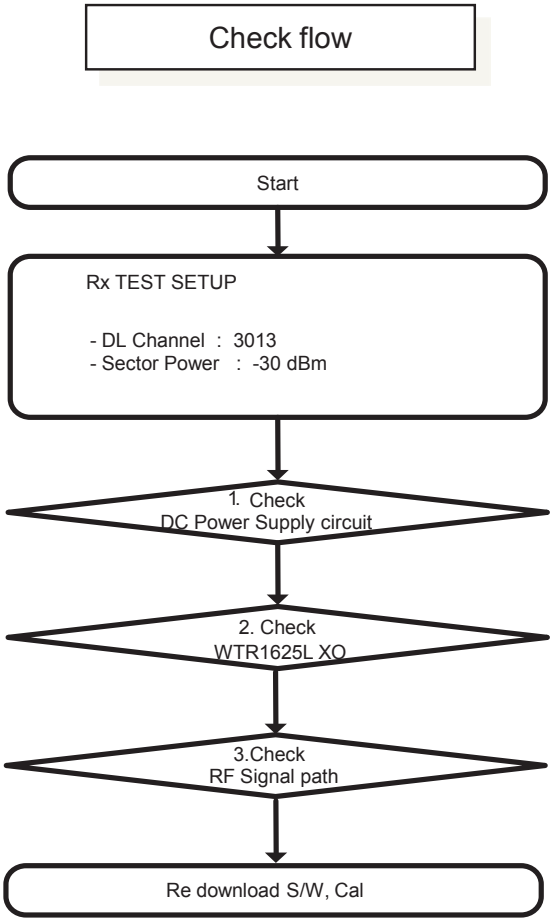

※ there are no Test Points on the IQ Data Line. So It is impossible to check the IQ Data Wave form

3.2.4 WCDMA_B8 Rx

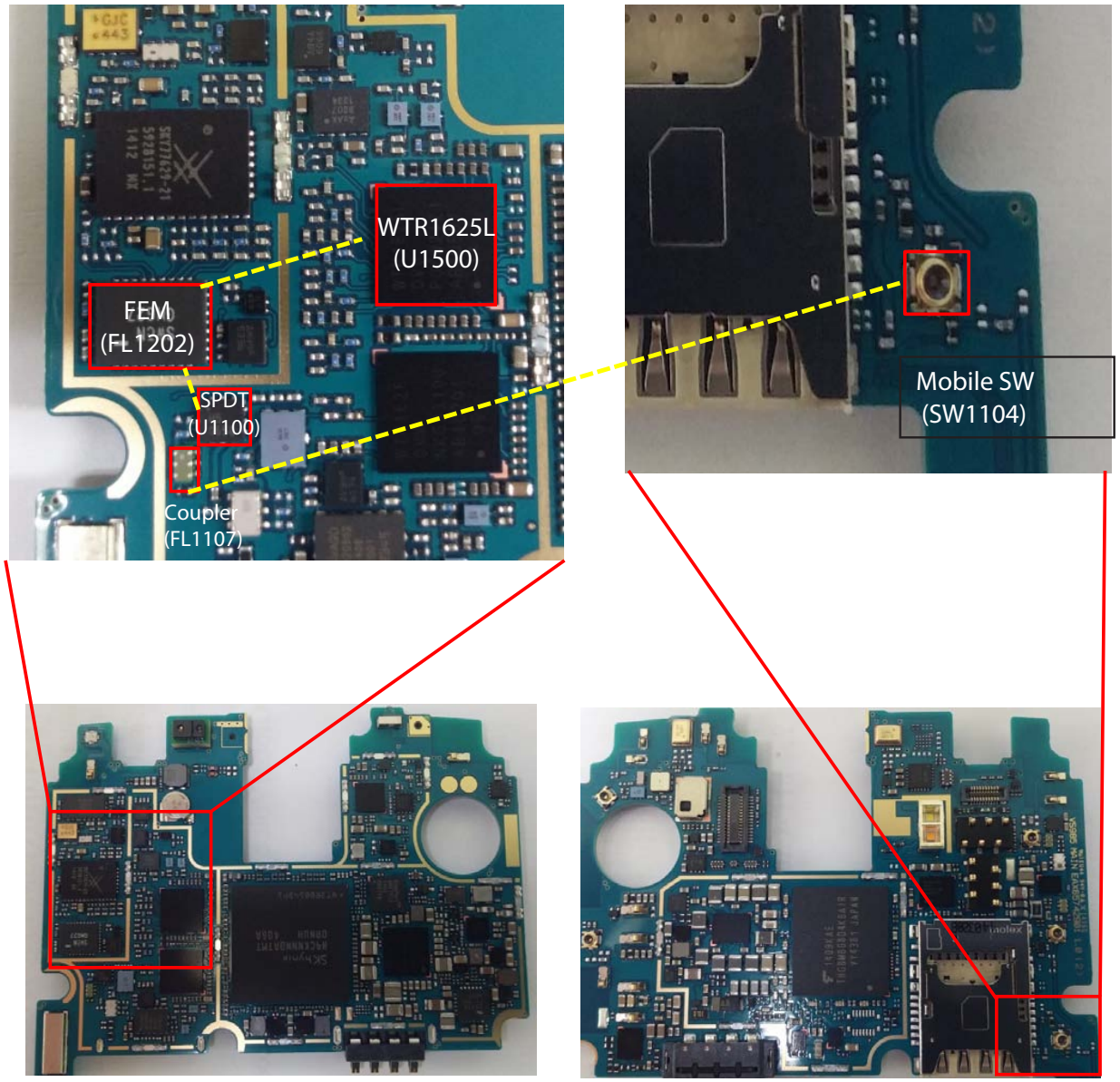

<AS985 _Main PCB_Top>

<AS985 _Main PCB_Bottom>

3.2.4.1 Checking DC Power Supply Circuit

Checking Flow

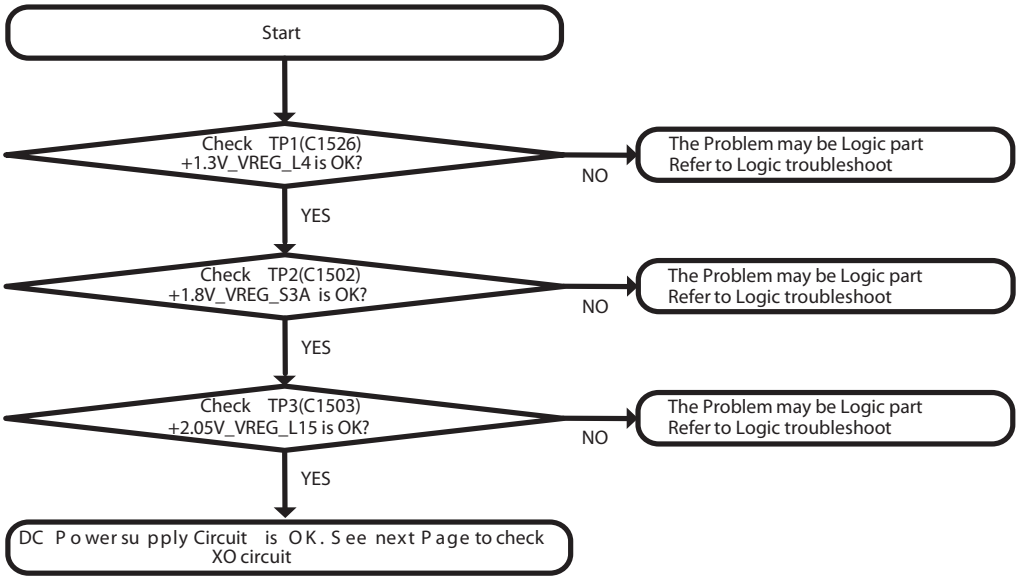

Test Point

TP2 : C1502
(+1.8V_VREG_S3A)

TP1 : C1526
(+1.3V_VREG_L4)

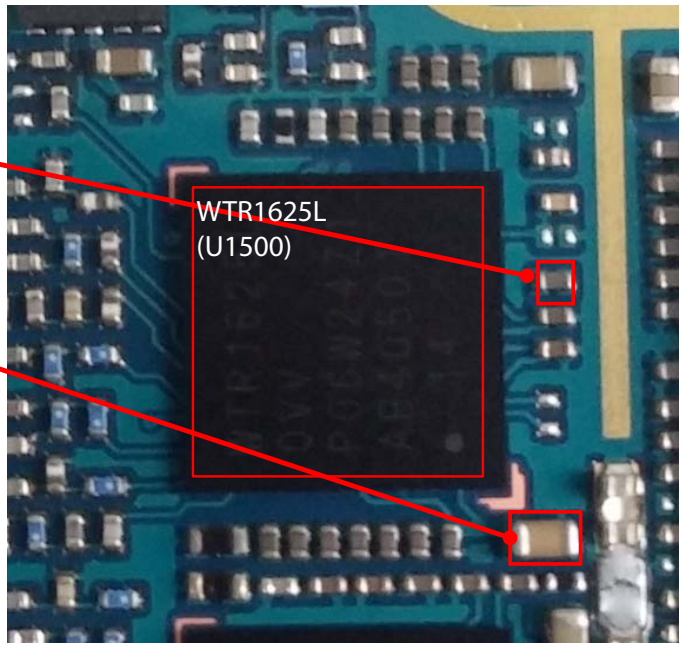

Top Side

Circuit Diagram

+1.3V_VREG_L4 / +1.8V_VREG_S3A

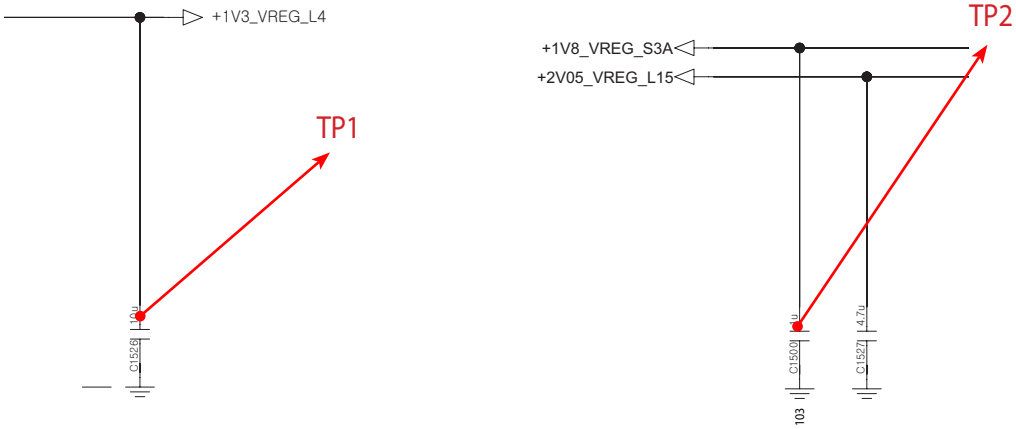

3.2.4.1 Checking DC Power Supply Circuit (+2.05V_VREG_L15)

Test Point

TP3 : C1503
(+2.05V_VREG_L15)

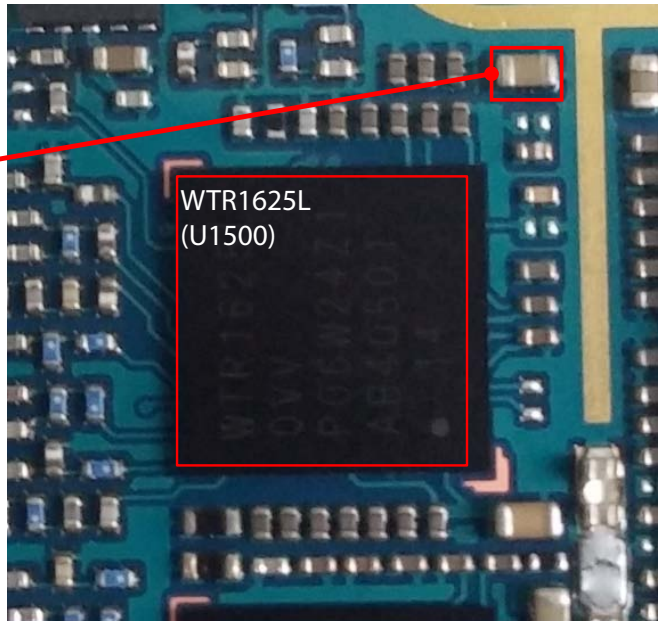

Top Side

Circuit Diagram

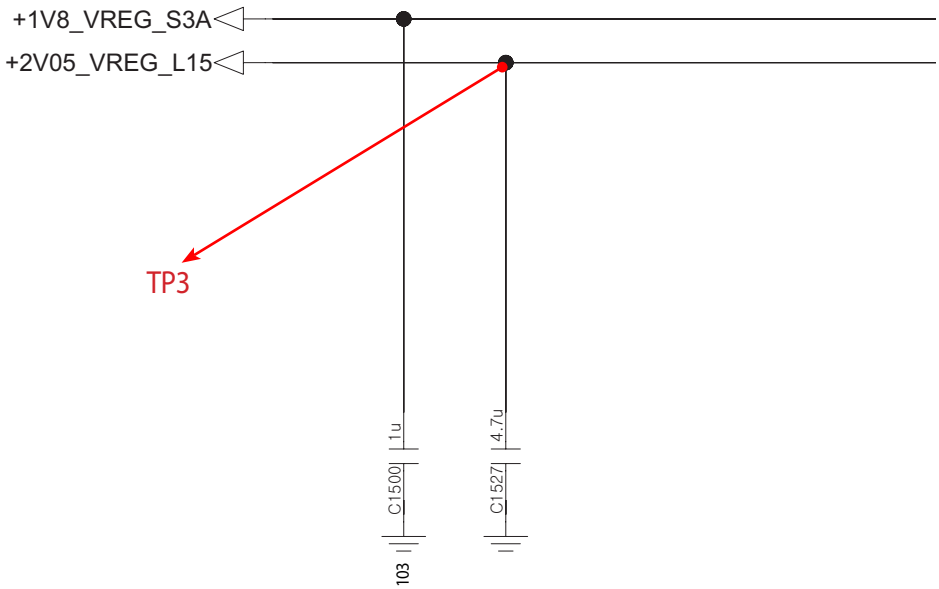

3.2.4.2 Checking WTR1625L XO Circuit

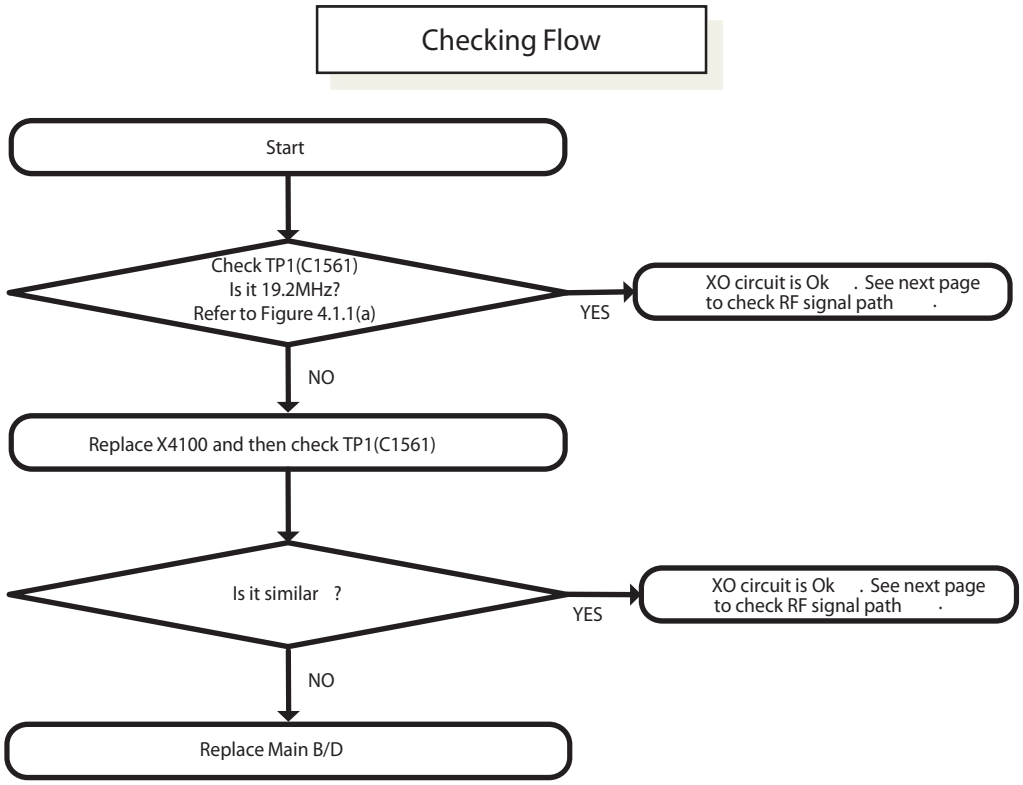

Waveform

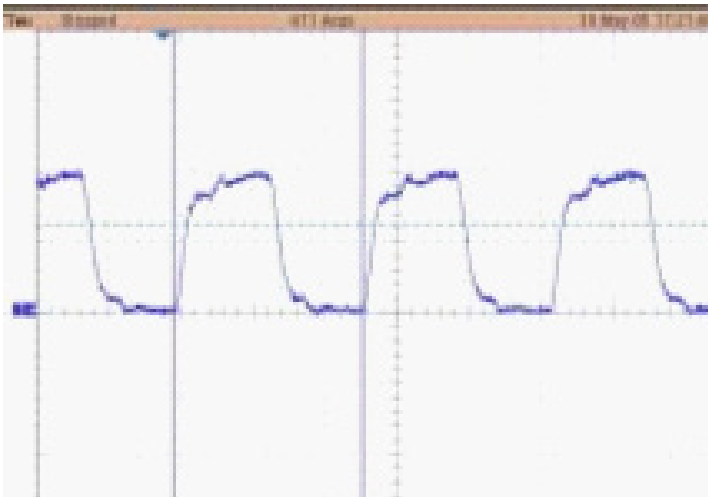

_ Figure 3.1.1 (a)

3.2.4.2 Checking WTR1625L XO Circuit

Test Point

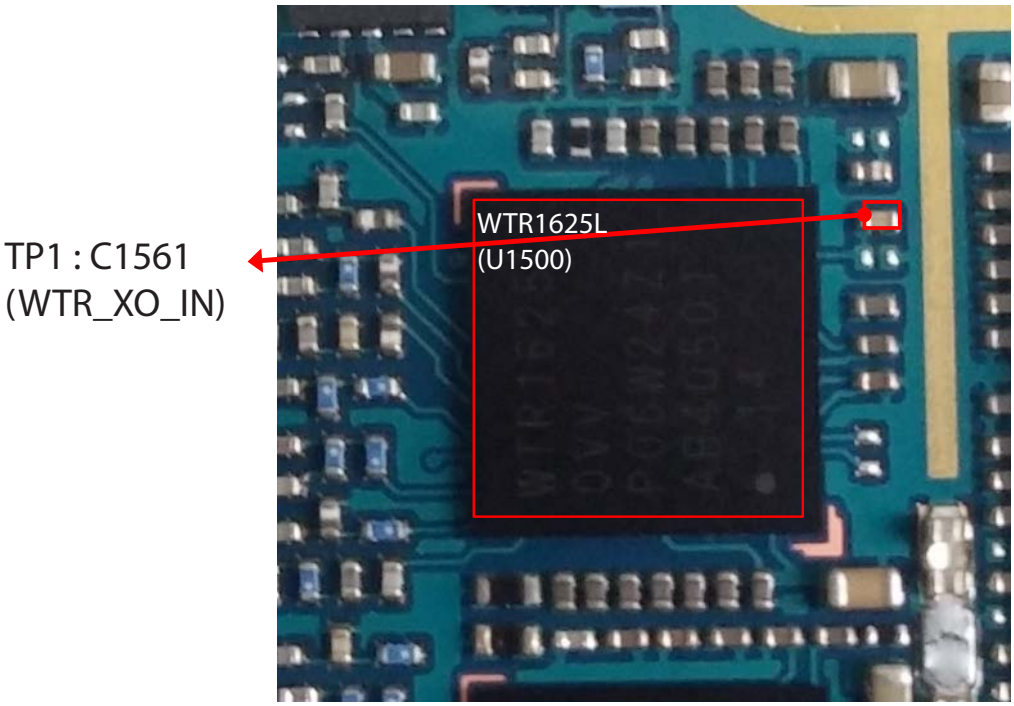

Circuit Diagram

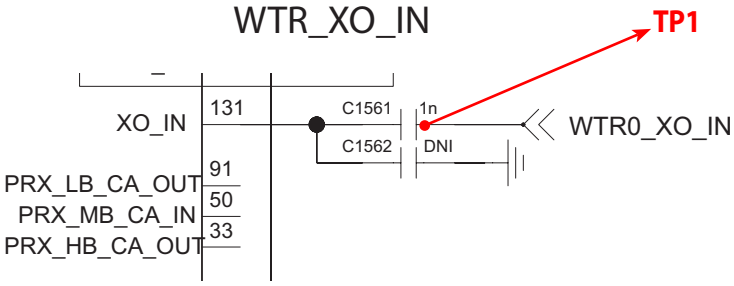

3.2.4.3 Checking RF Signal Path (SPDT)

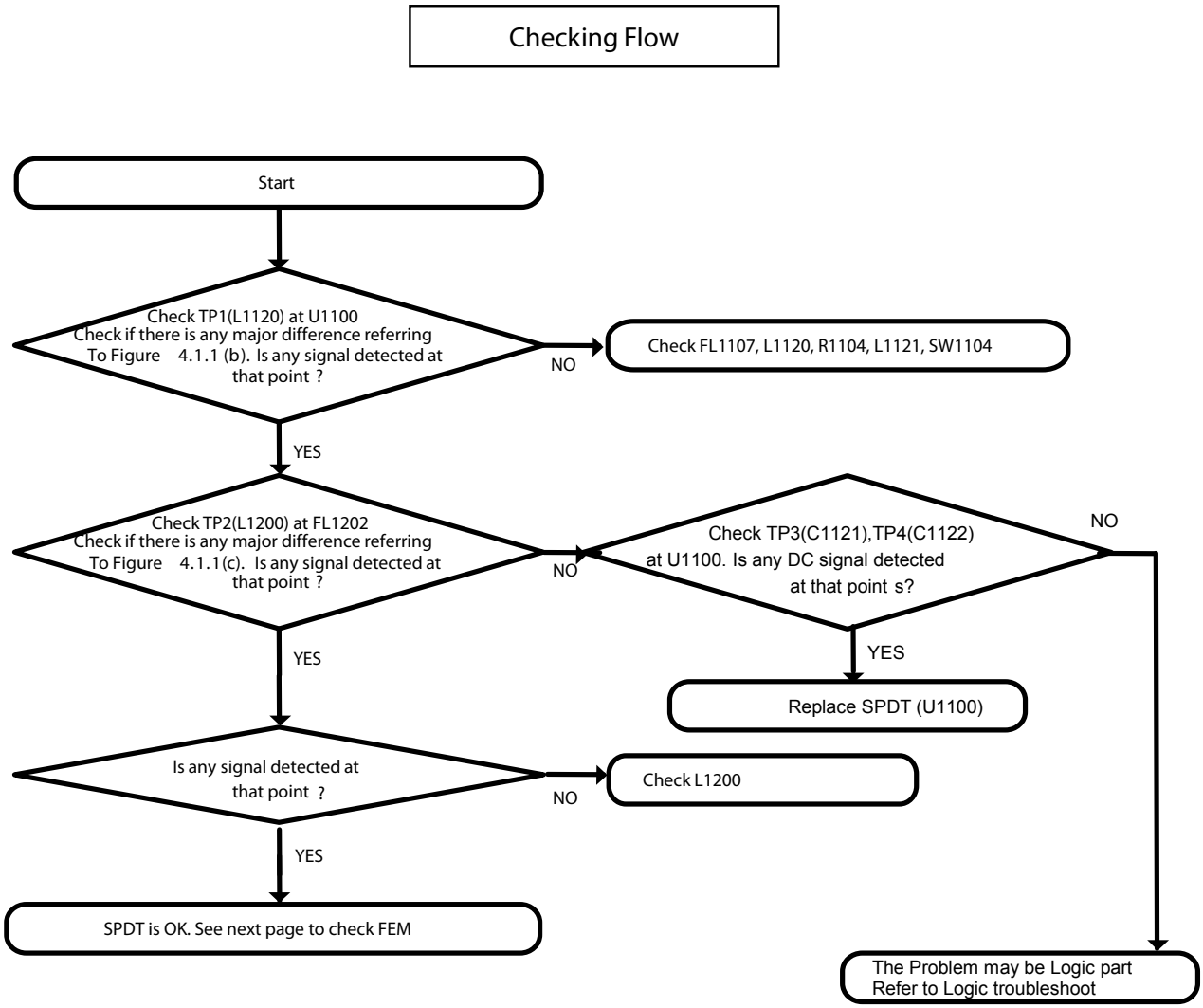

Test Point

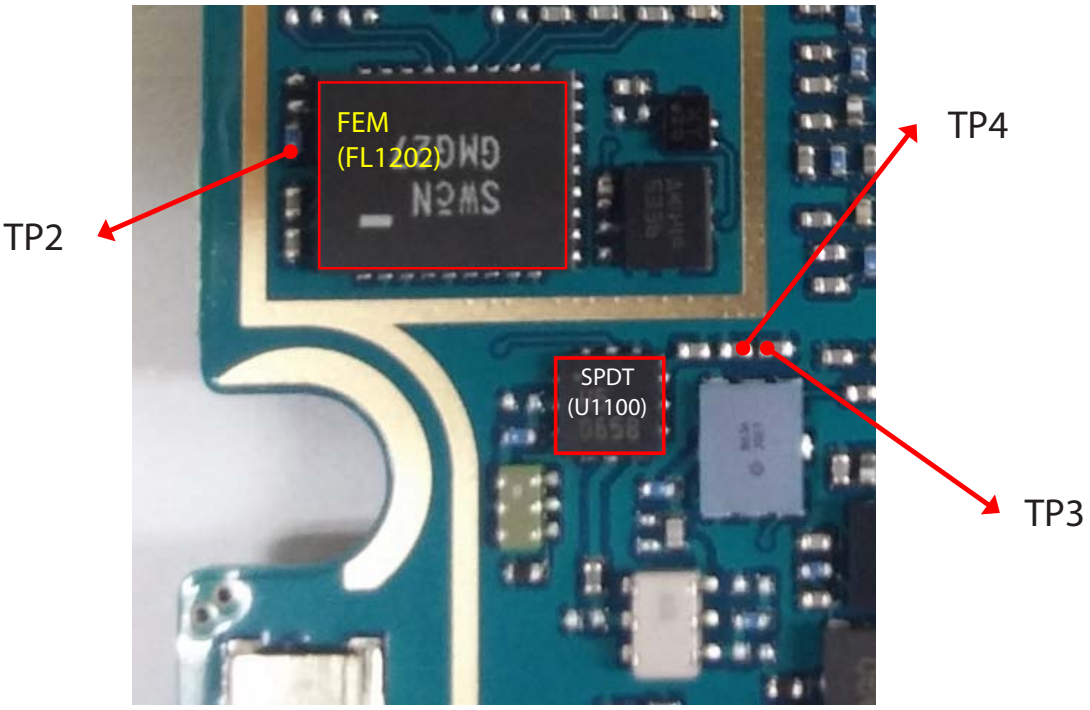

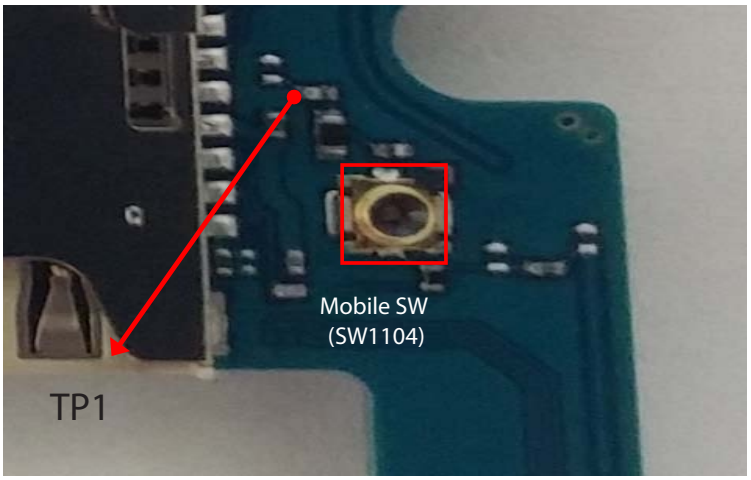

Circuit Diagram

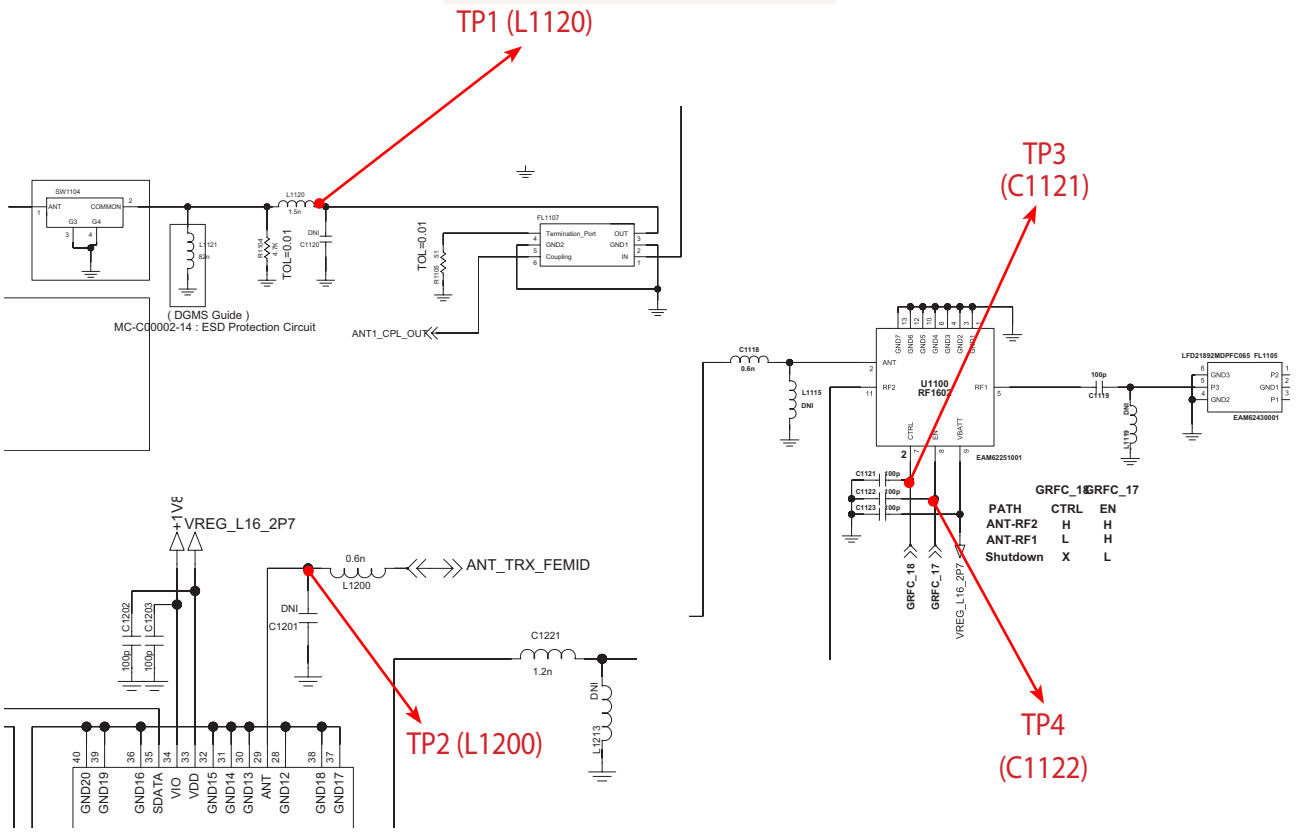

Waveform

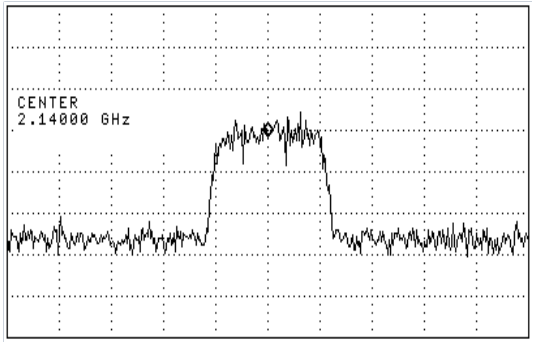

Figure 3.1.1 (b)

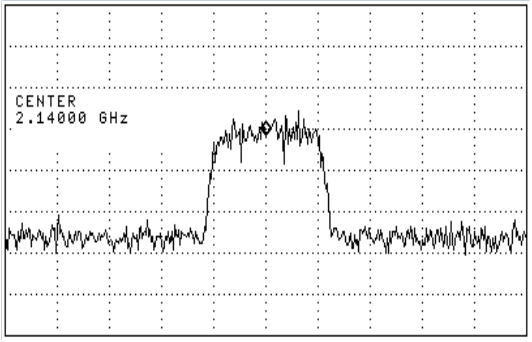

Figure 3.1.1 (c)

3.2.4.4 Checking RF Signal Path (FEM)

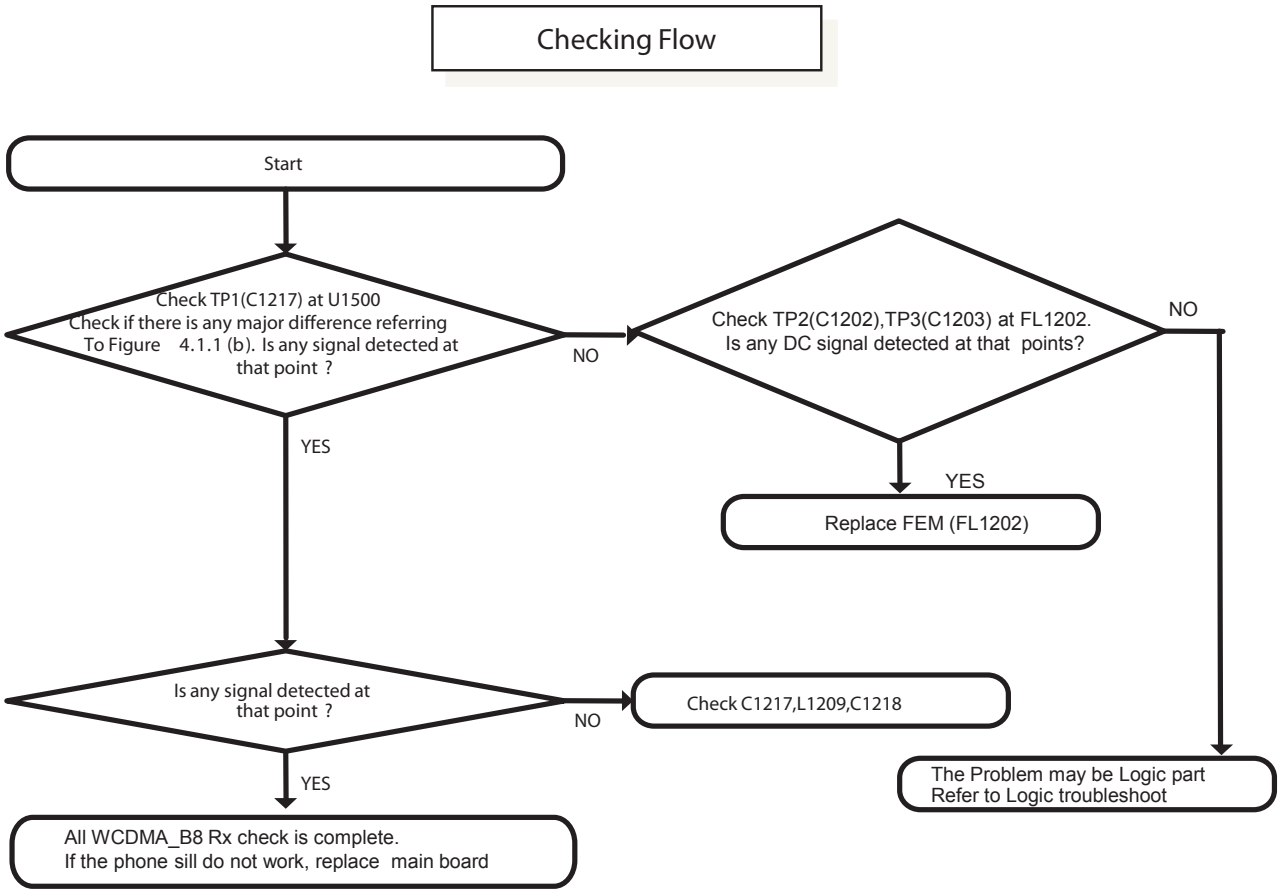

3.2.4.4 Checking RF Signal Path (FEM)

Test Point

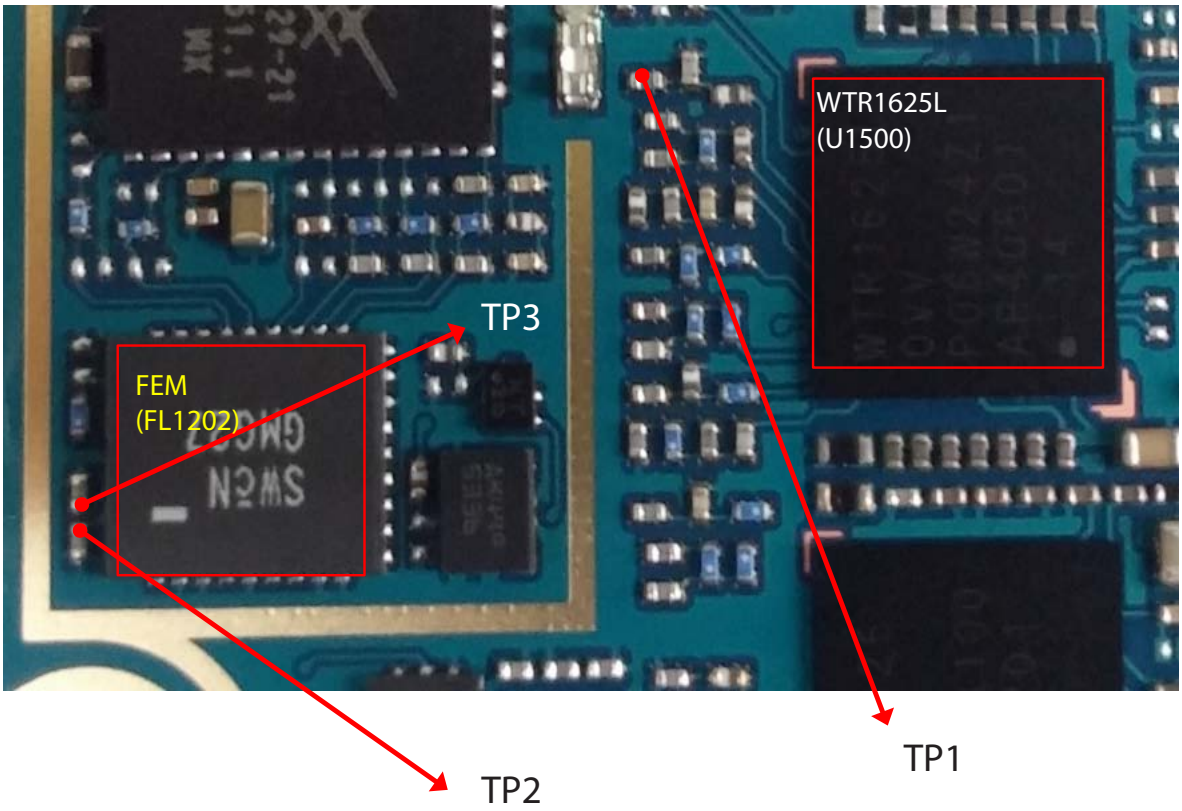

Circuit Diagram

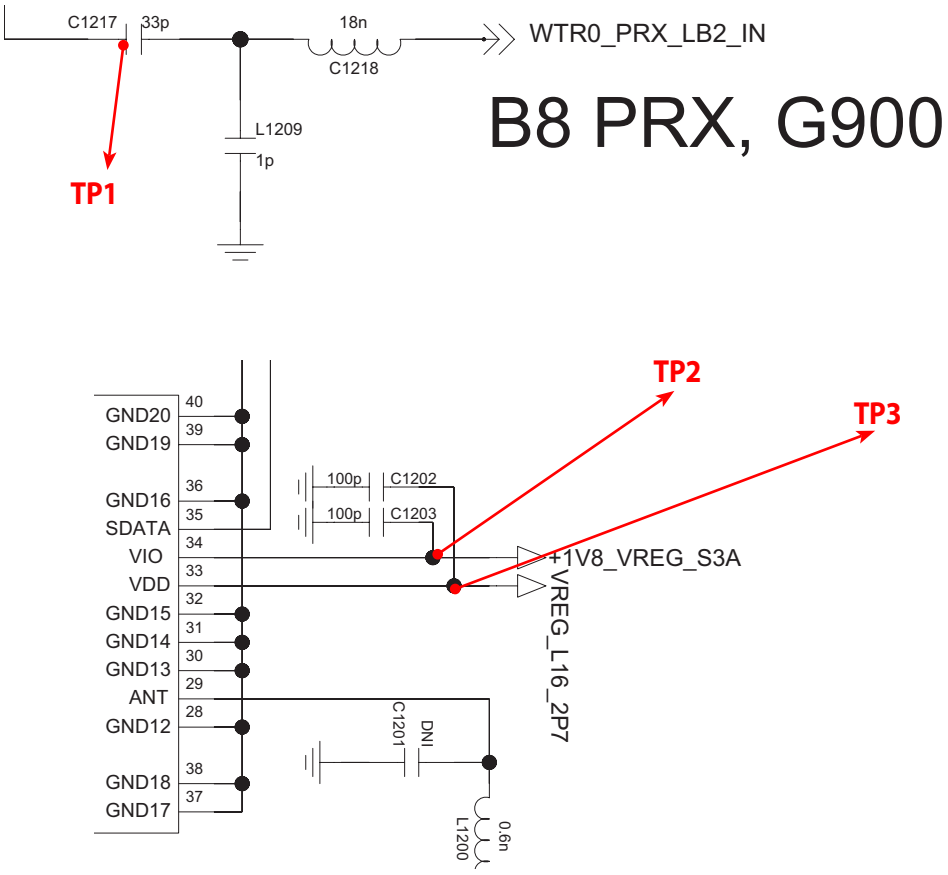

Waveform

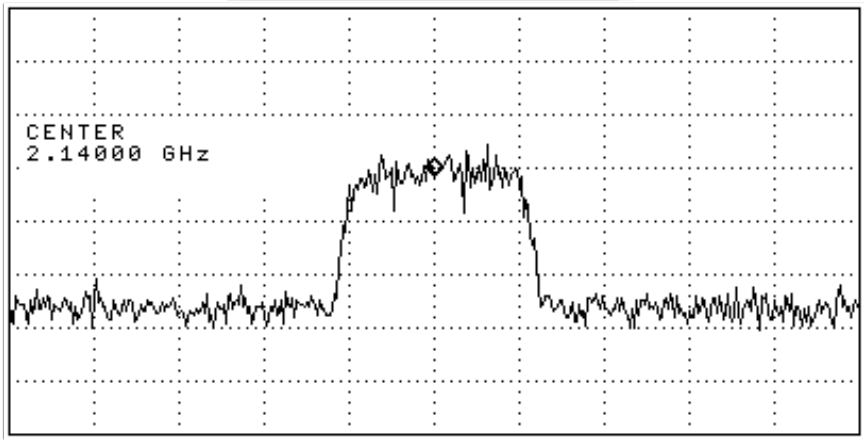

Figure 3.1.1 (b)

3.2.1 WCDMA_B1 Tx

Checking Flow

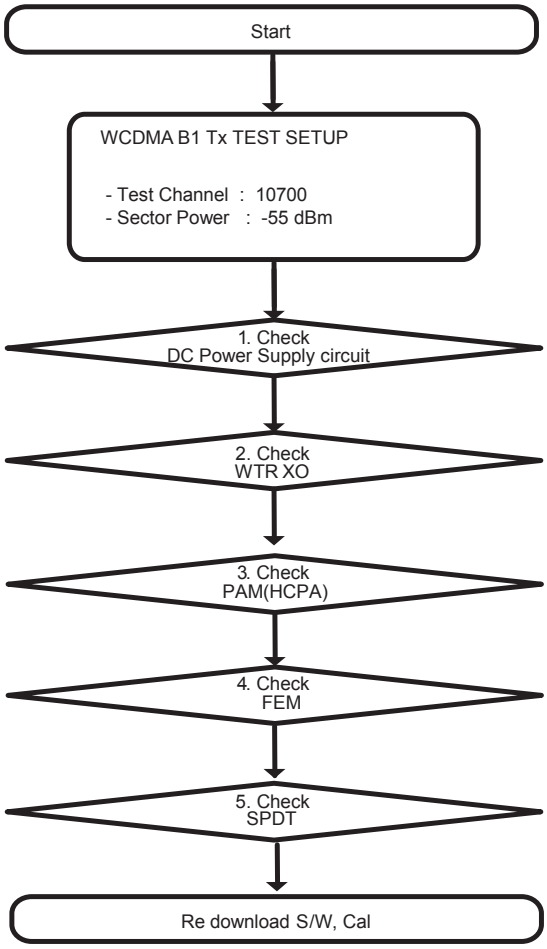

※ there are no Test Points on the IQ Data Line. So It is impossible to check the IQ Data Wave form

WCDMA B1 TX RF PATH

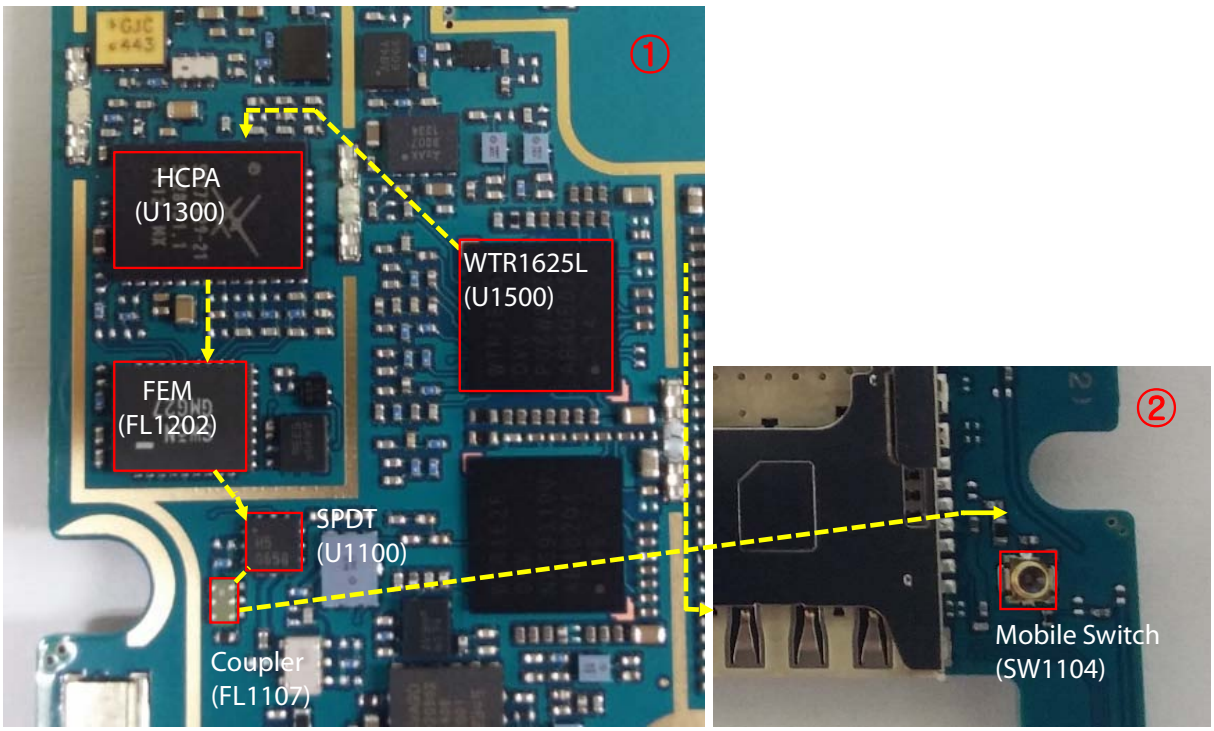

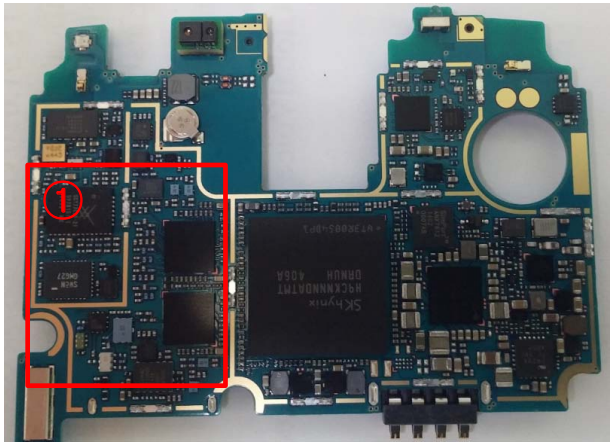

Top Side

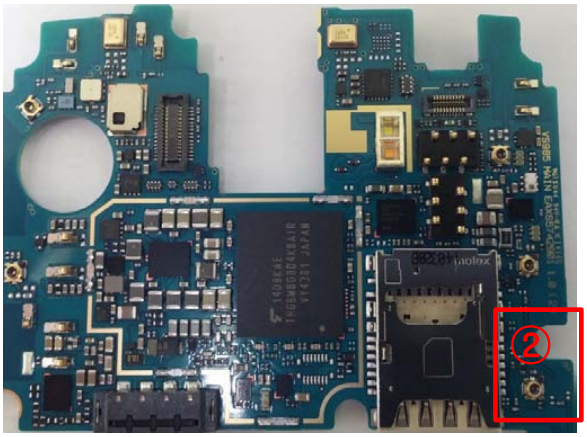

Bottom Side

3.2.1.1 Checking DC Power supply circuit (+1.3V_VREG_L4)

Test Point

TP1 : C1526
(+1.3V_VREG_L4)

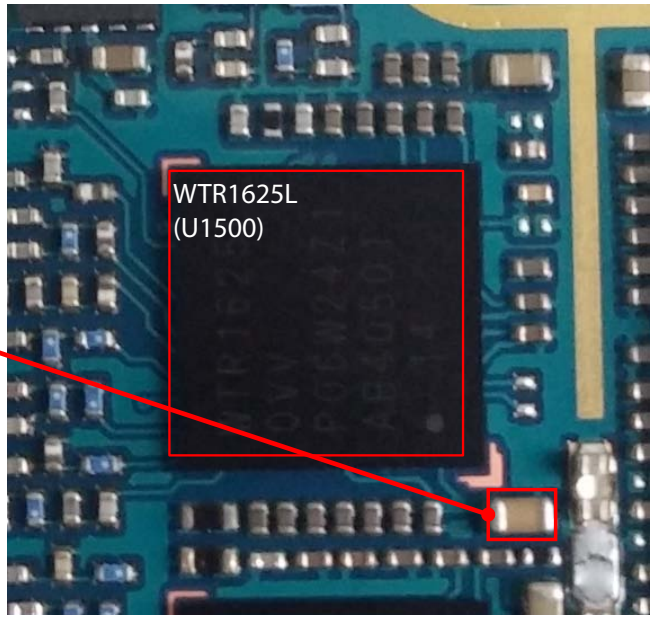

Top Side

Circuit Diagram

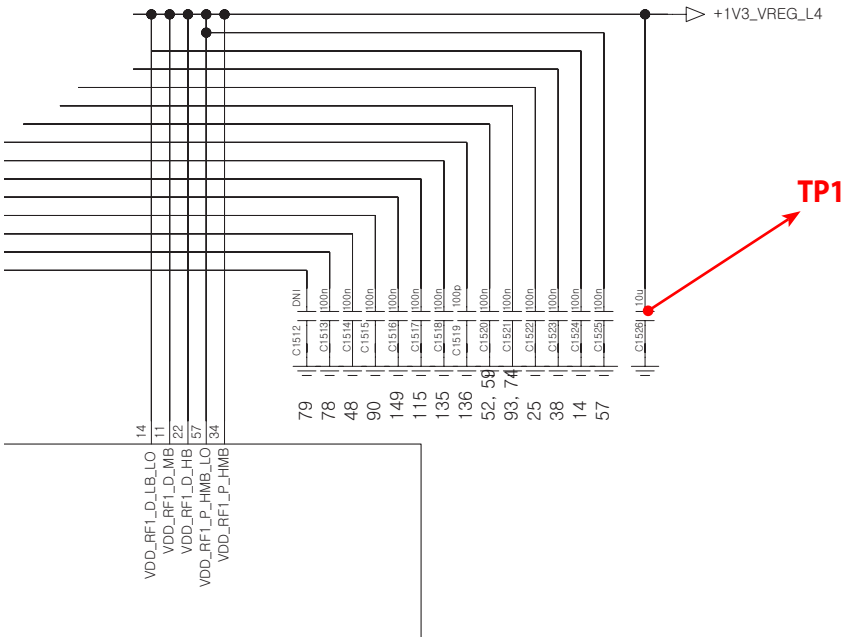

3.2.1.1 Checking DC Power supply circuit (+2.05V_VREG_L15)

Test Point

TP3 : C1503
(+2.05V_VREG_L15)

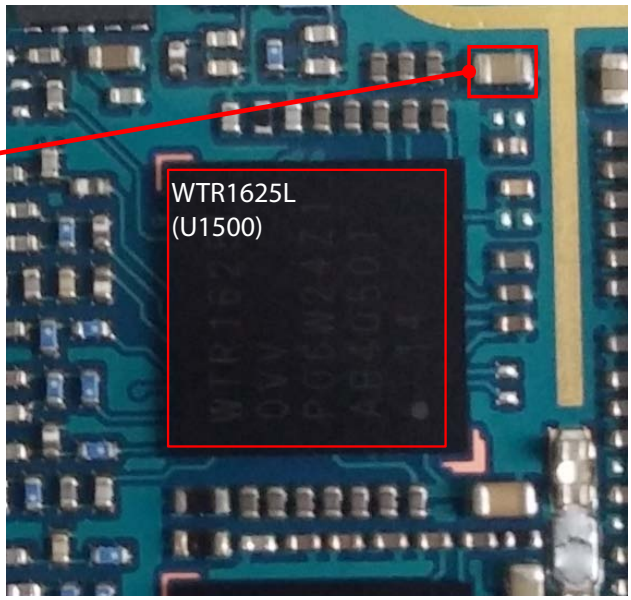

Top Side

Circuit Diagram

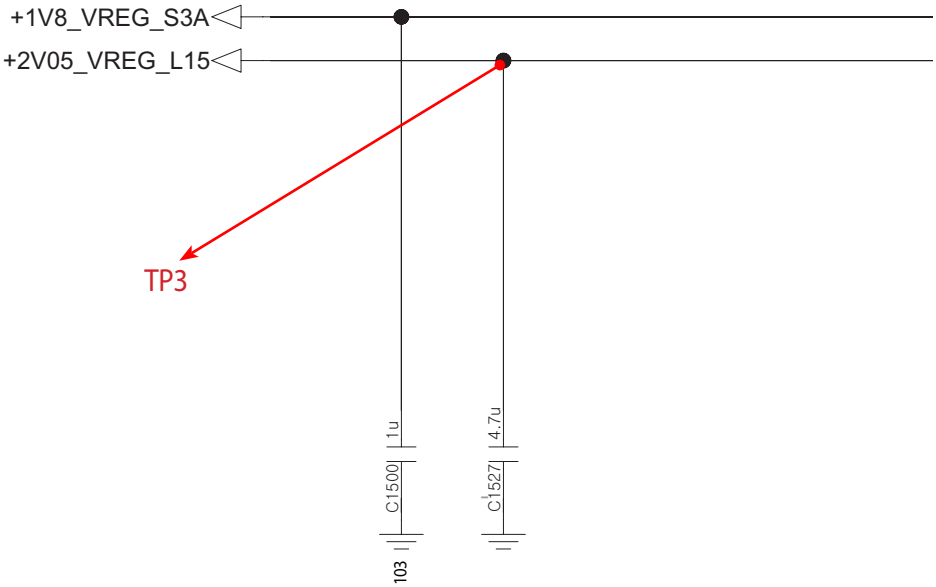

3.2.1.1 Checking DC Power supply circuit (+1.8V_VREG_S3A)

Test Point

TP2 : C1502
(+1.8V_VREG_S3A)

Top Side

Circuit Diagram

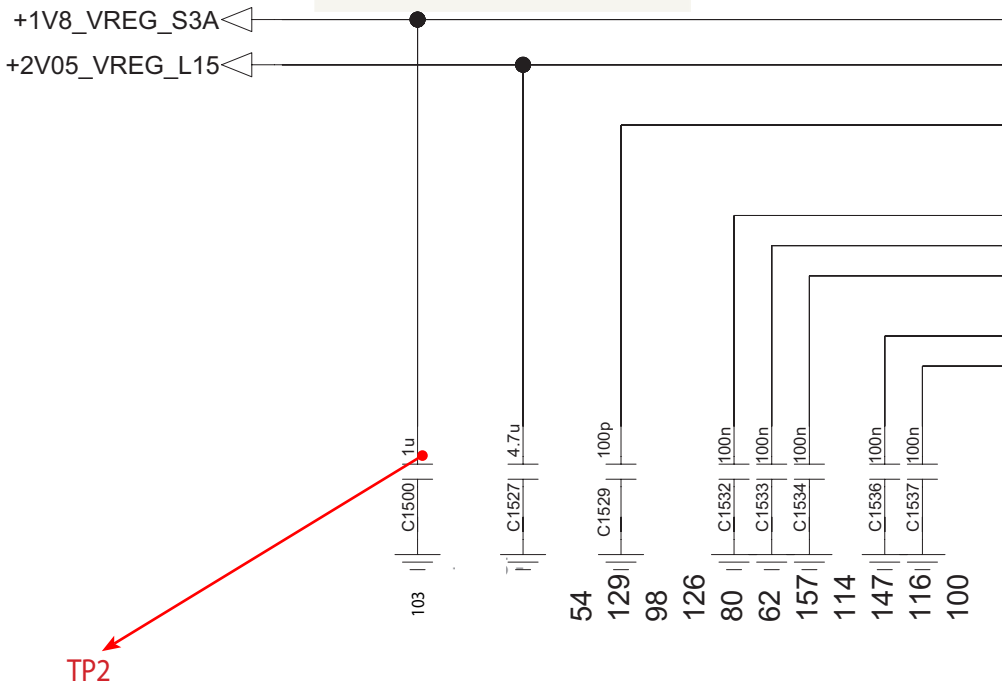

Checking Flow

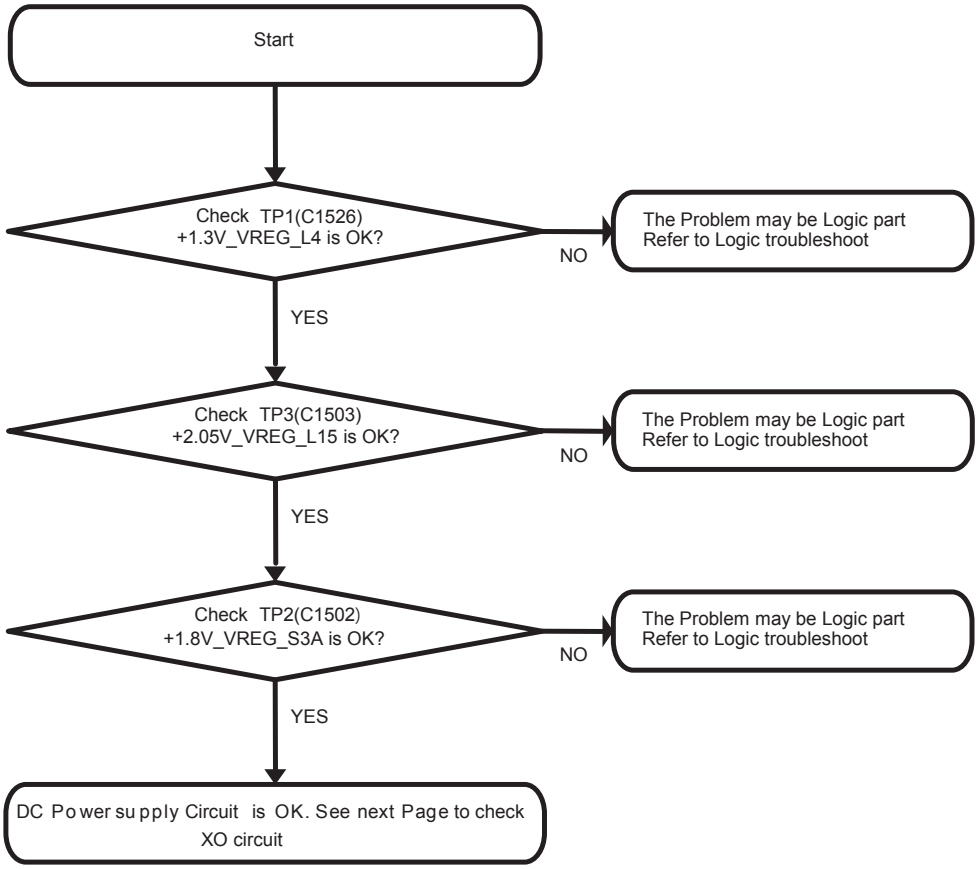

3.2.1.2 Checking WTR XO circuit

Test Point

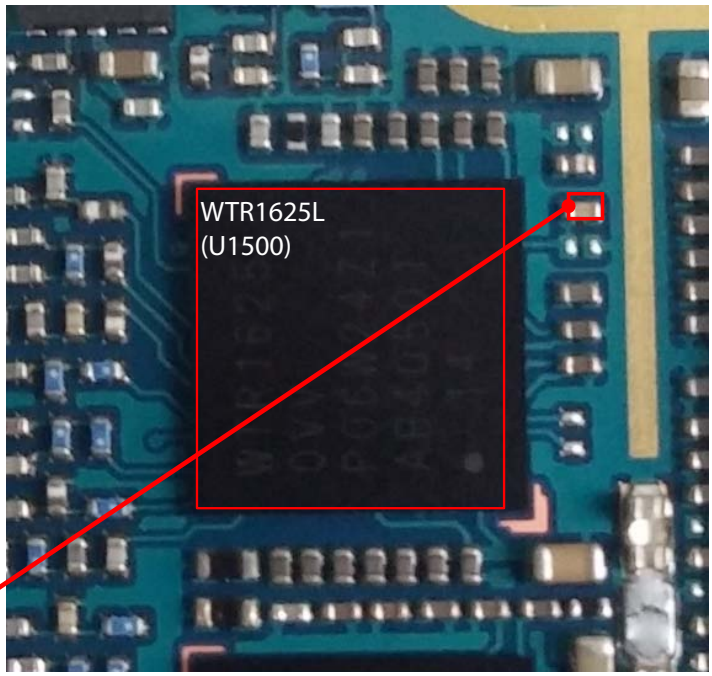

TP1 : C1561
(WTR_XO_IN)

Circuit Diagram

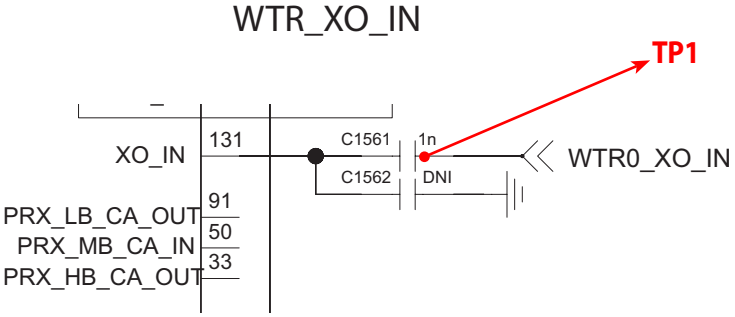

Checking Flow

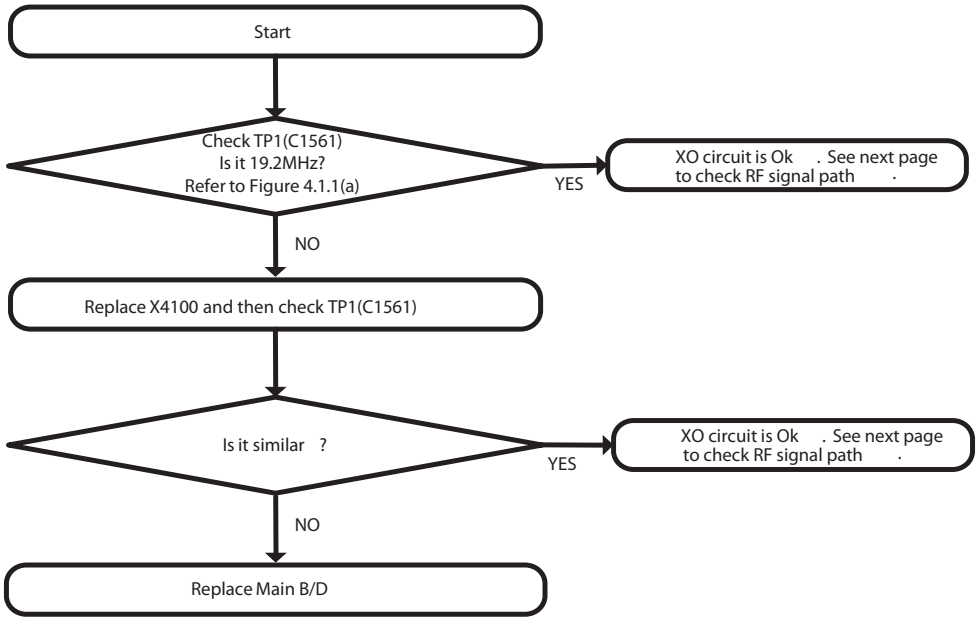

Waveform

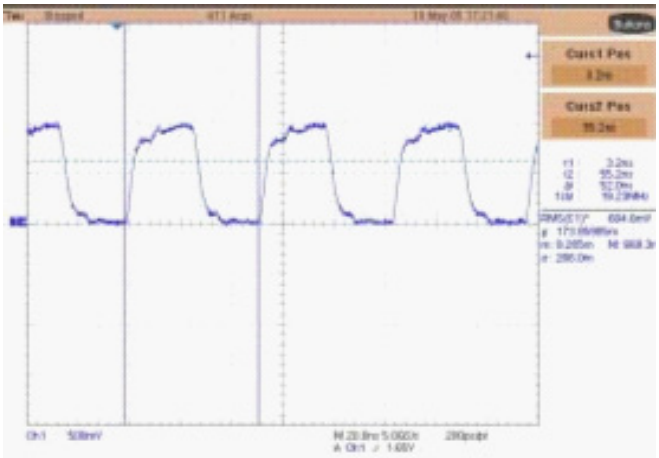

Figure 3.2.1.2 (a)

3.2.1.3 Checking WTR TX OUT circuit

Test Point

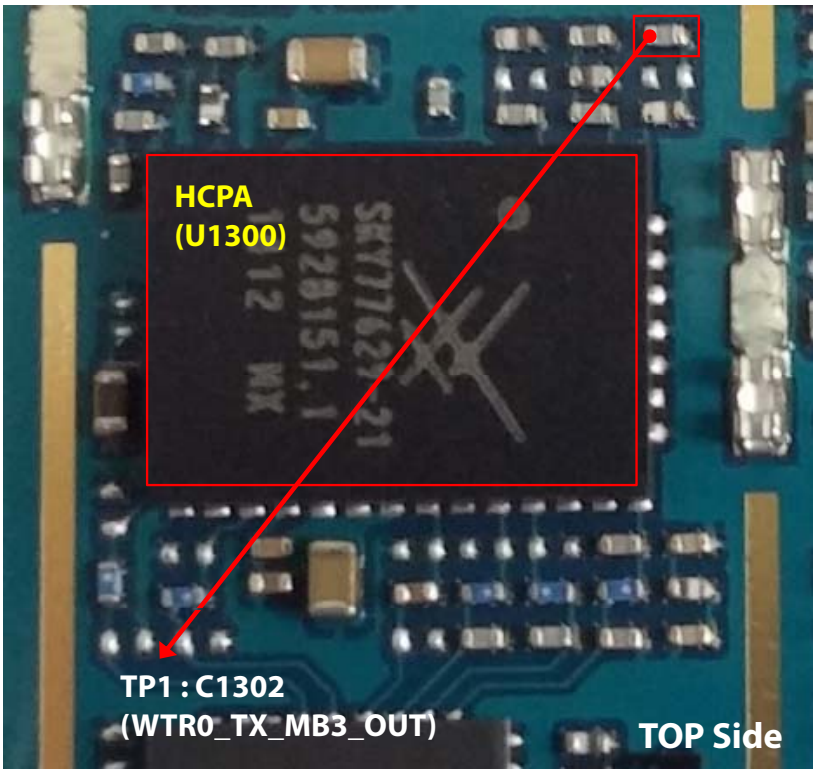

Circuit Diagram

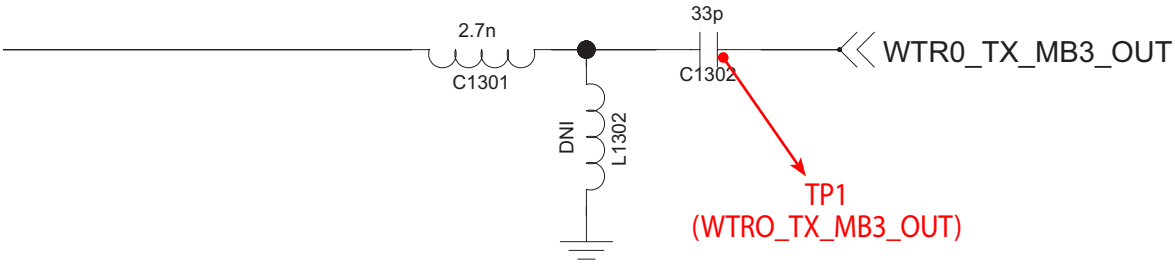

Checking Flow

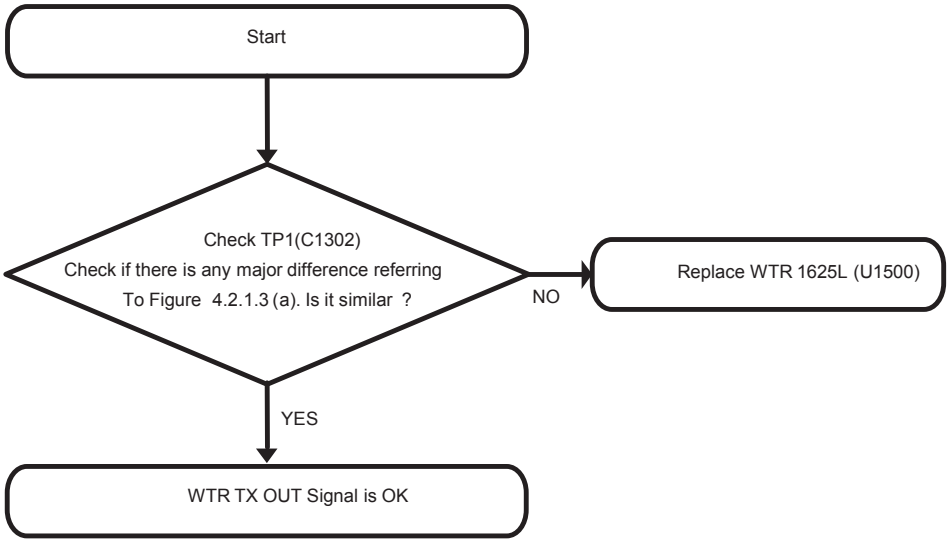

Waveform

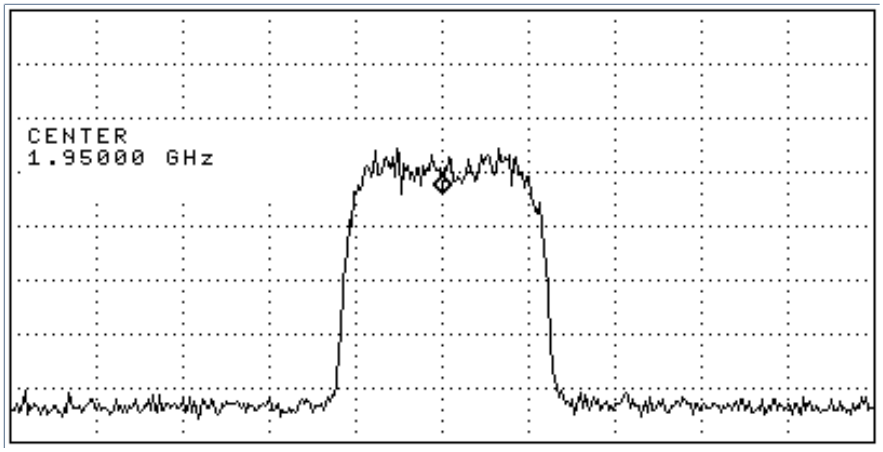

Figure 3.2.1.3 (a)

3.2.1.4 Check WCDMA B1 HCPA circuit

Test Point

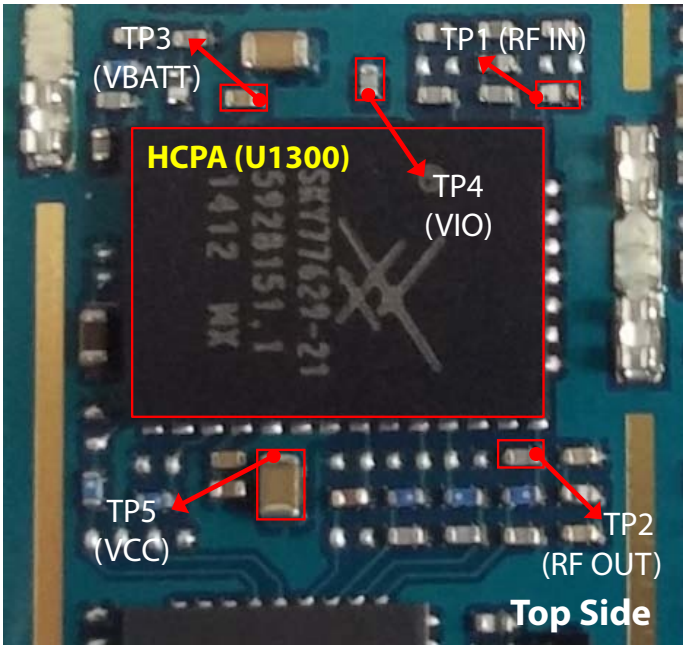

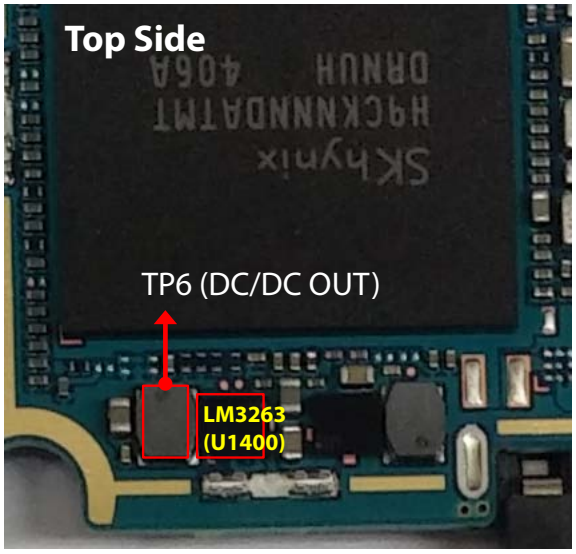

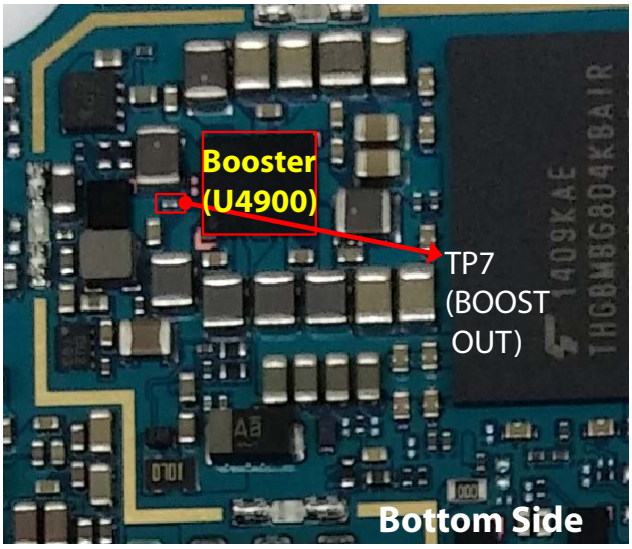

Circuit Diagram

HCPA_APT_SKY77629

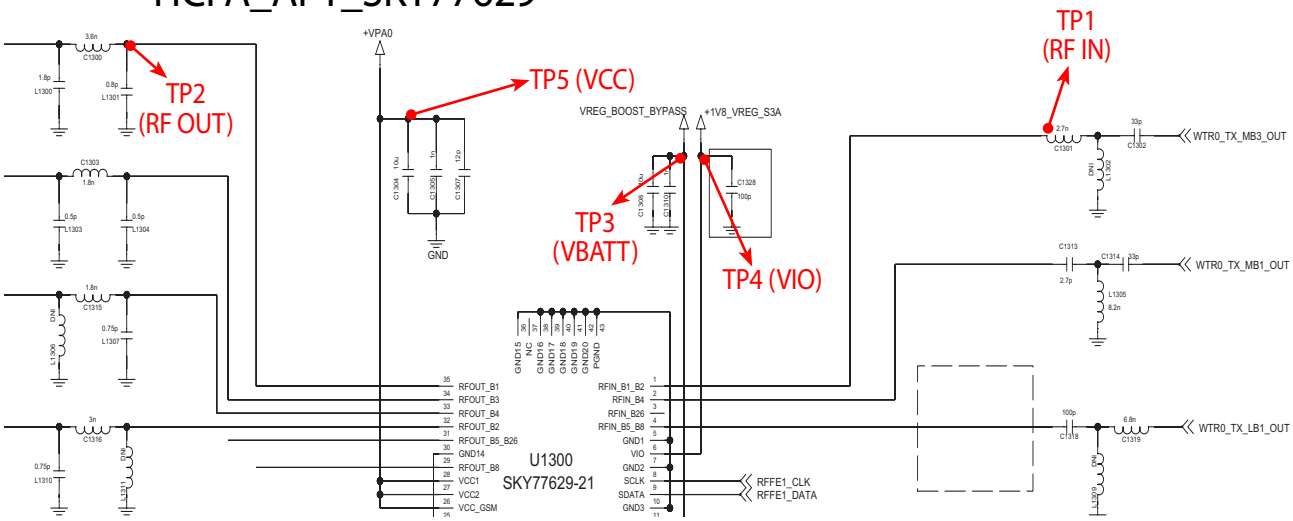

Global_LTE_APT_LM3263

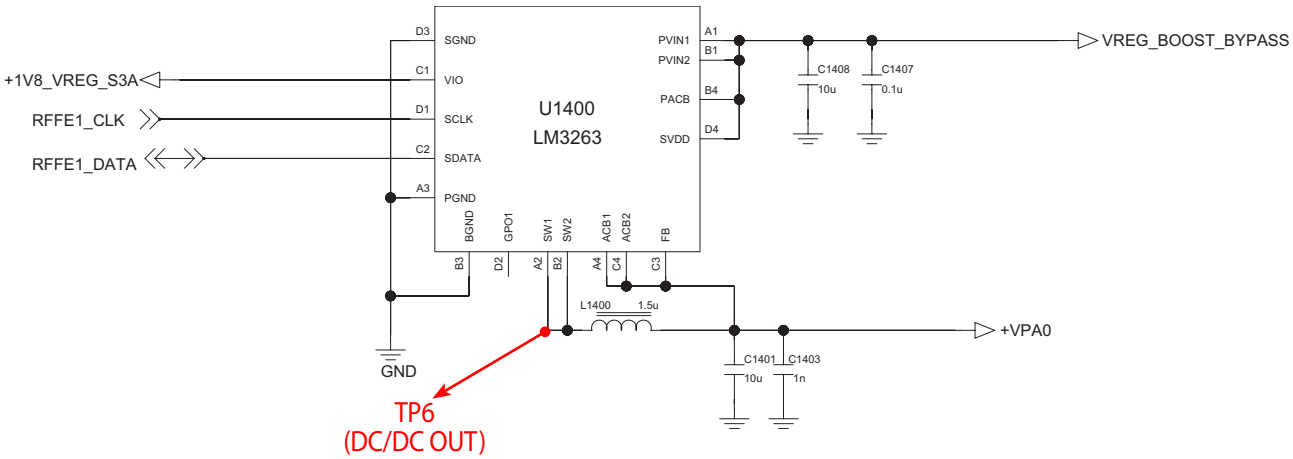

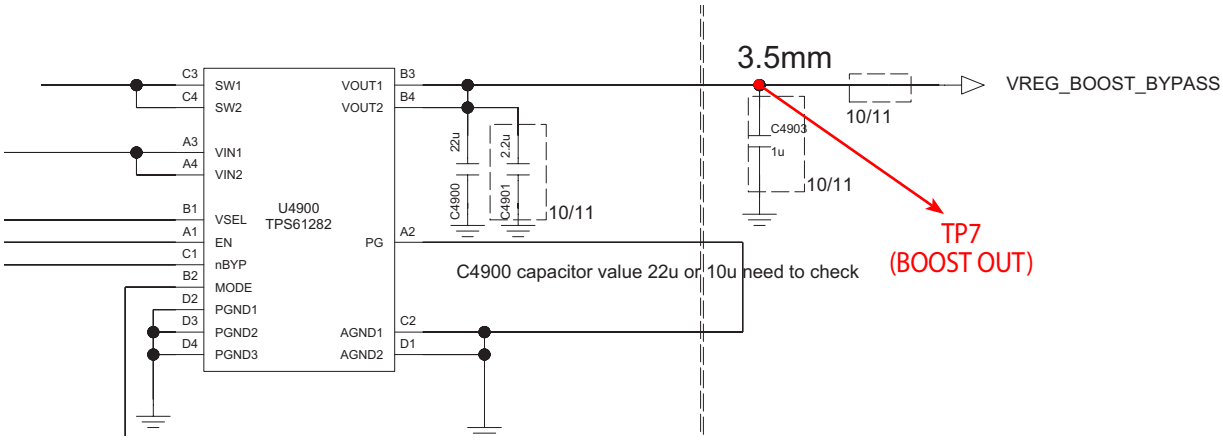

Checking Flow

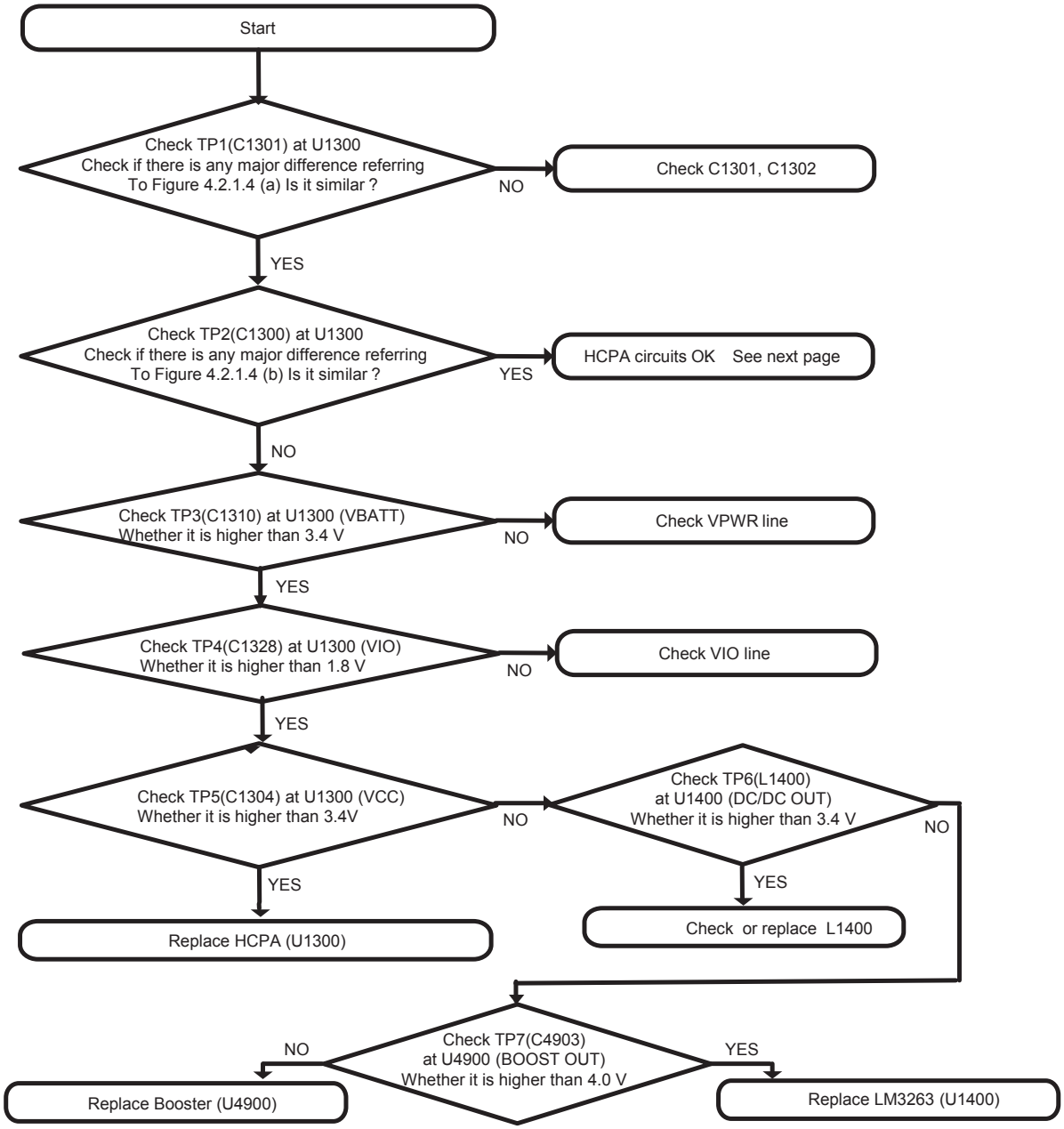

Waveform

TP1

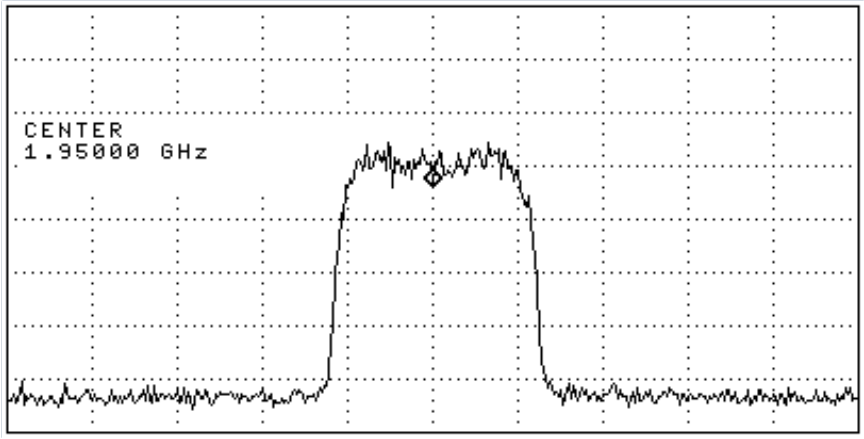

Figure 3.2.1.4 (a)

TP2

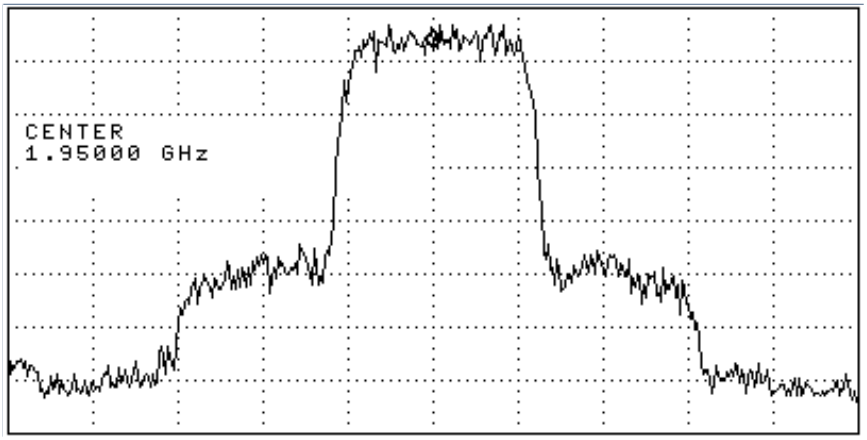

Figure 3.2.1.4 (b)

3.2.1.5 Checking RF signal path (FEM)

Test Point

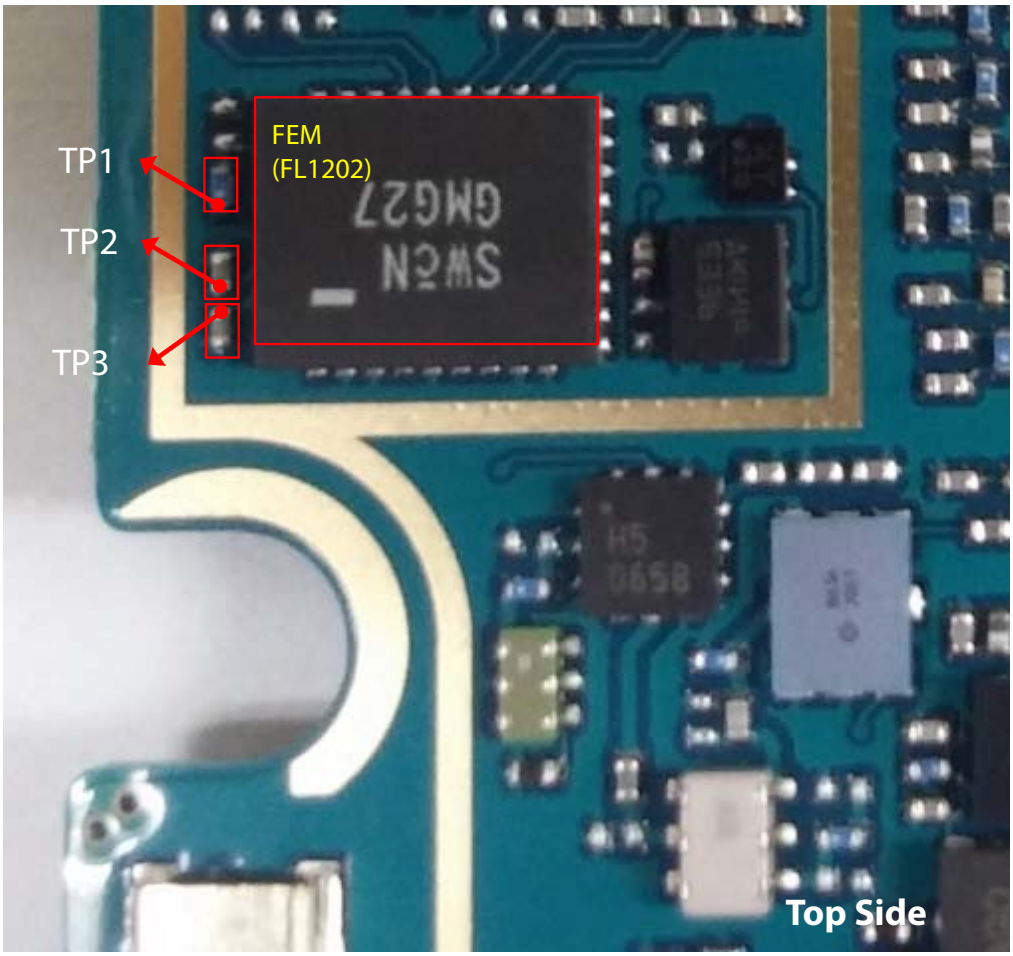

Circuit Diagram

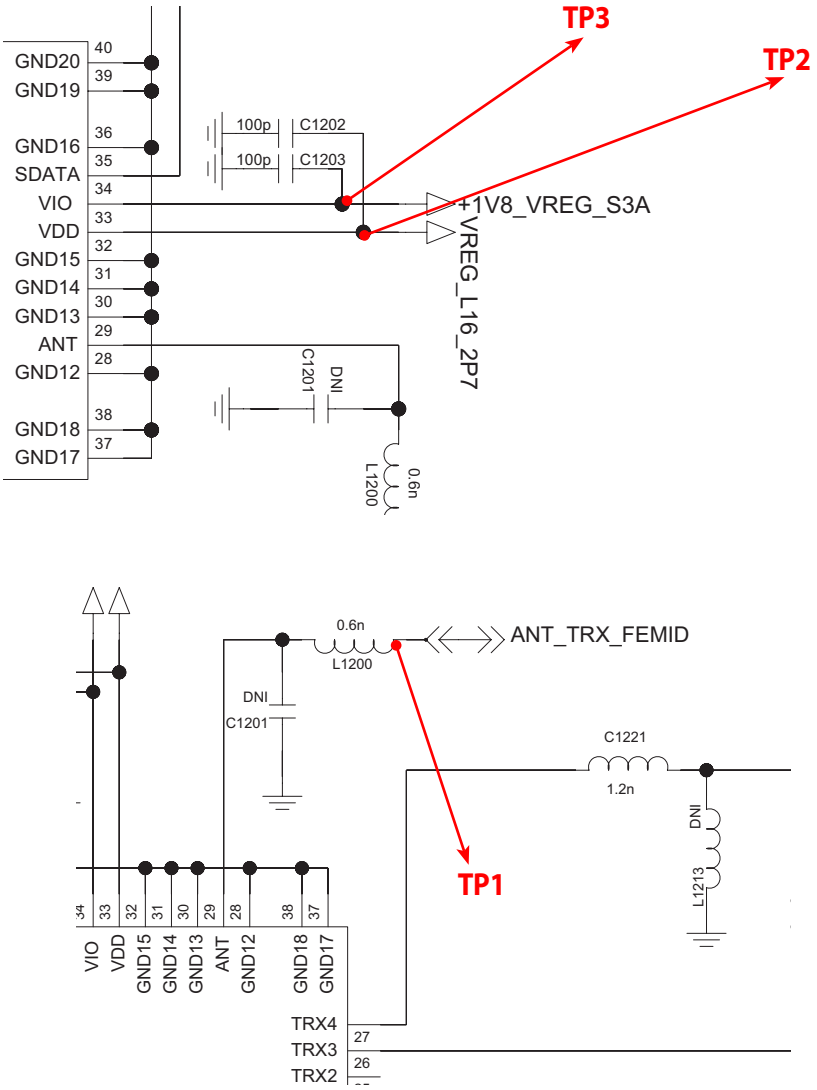

Checking Flow

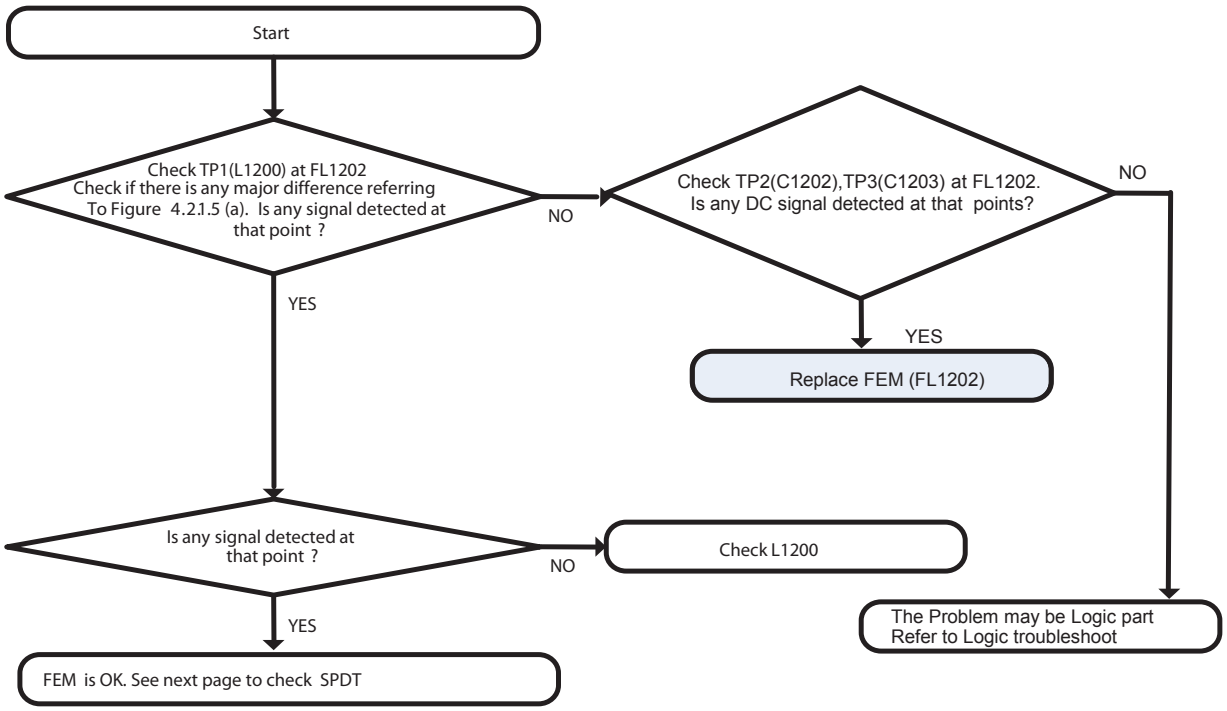

Waveform

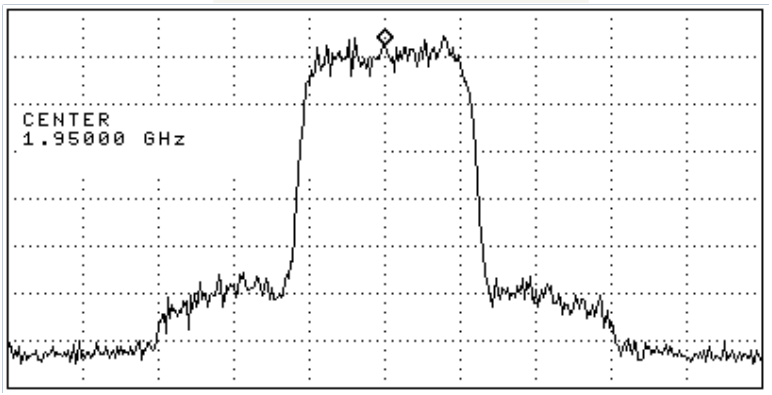

Figure 3.2.1.5 (a)

3.2.1.6 Checking RF signal path (SPDT)

Test Point

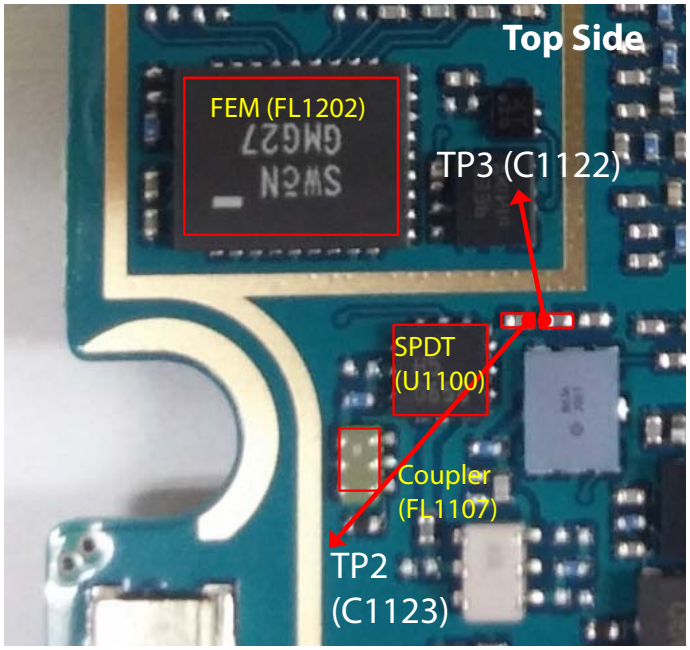

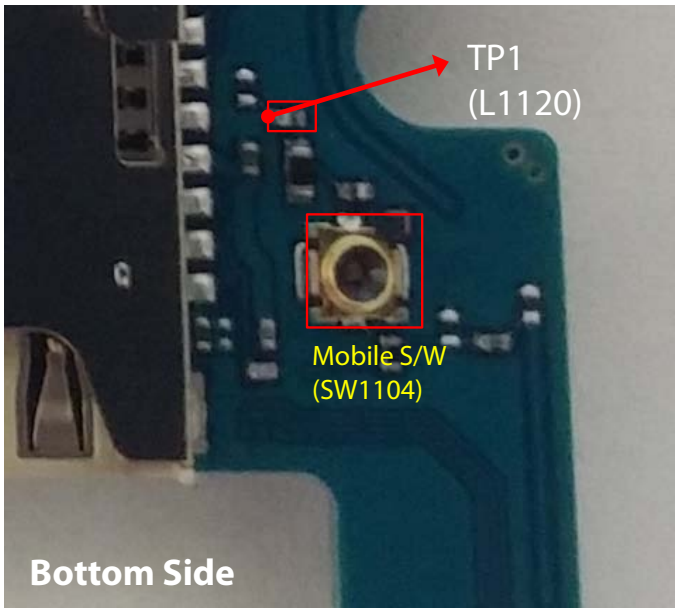

Circuit Diagram

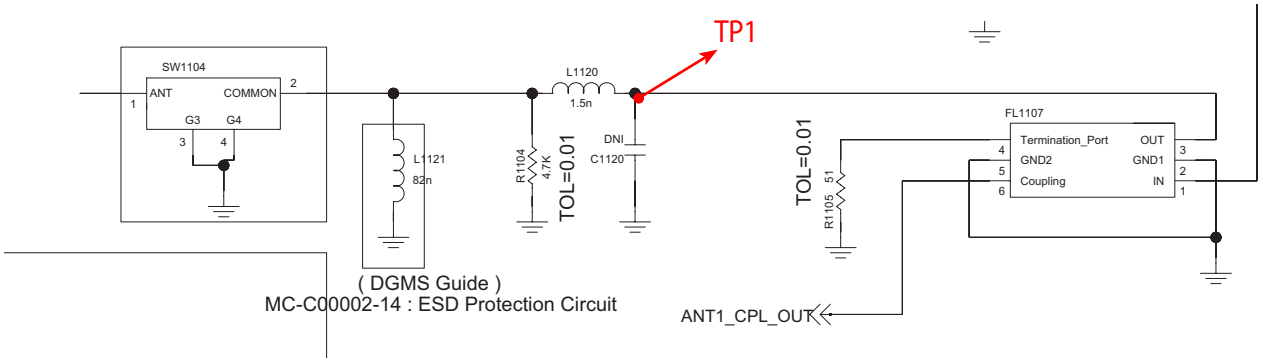

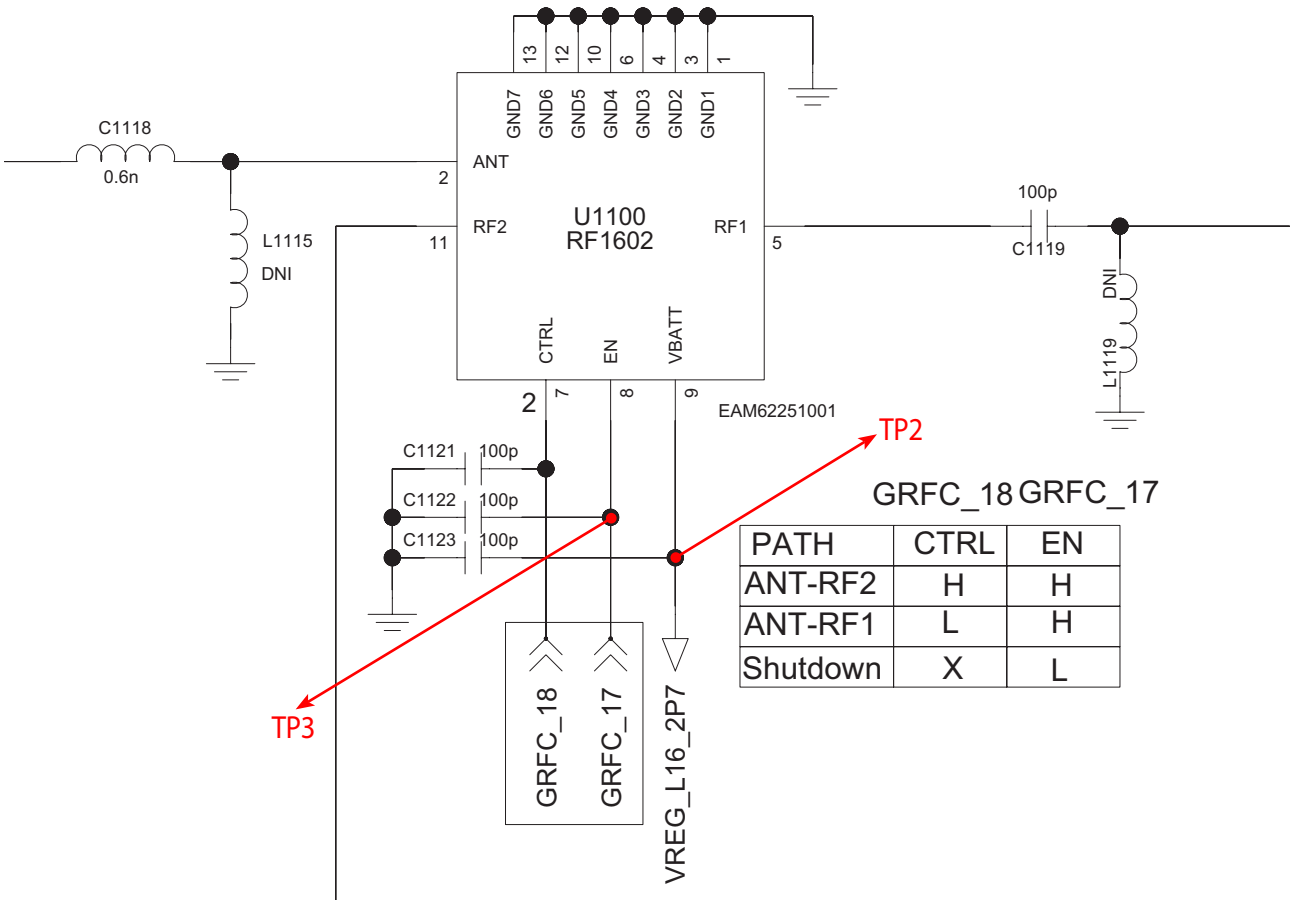

GRFC_18 GRFC_17

PATH	CTRL	EN
ANT-RF2	H	H
ANT-RF1	L	H
Shutdown	X	L

Checking Flow

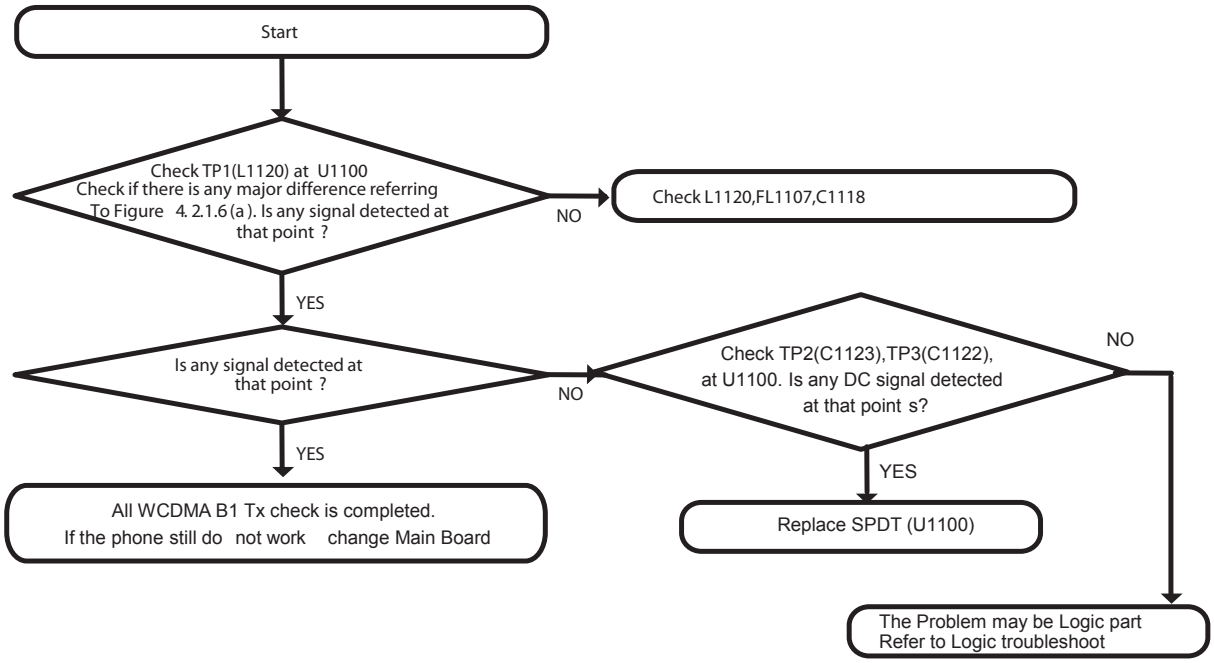

Waveform

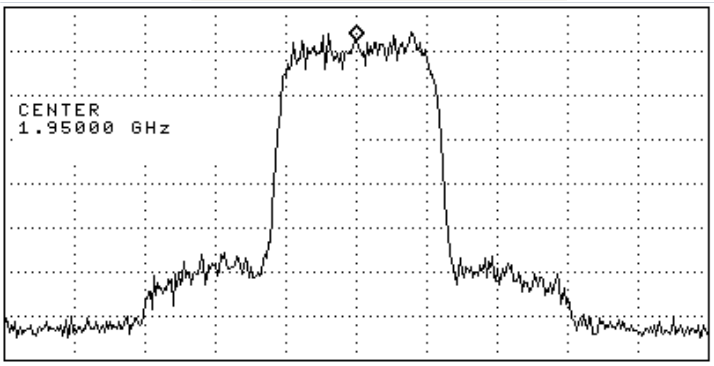

Figure 3.2.1.6 (a)

3.2.1 WCDMA_B2 Tx

Checking Flow

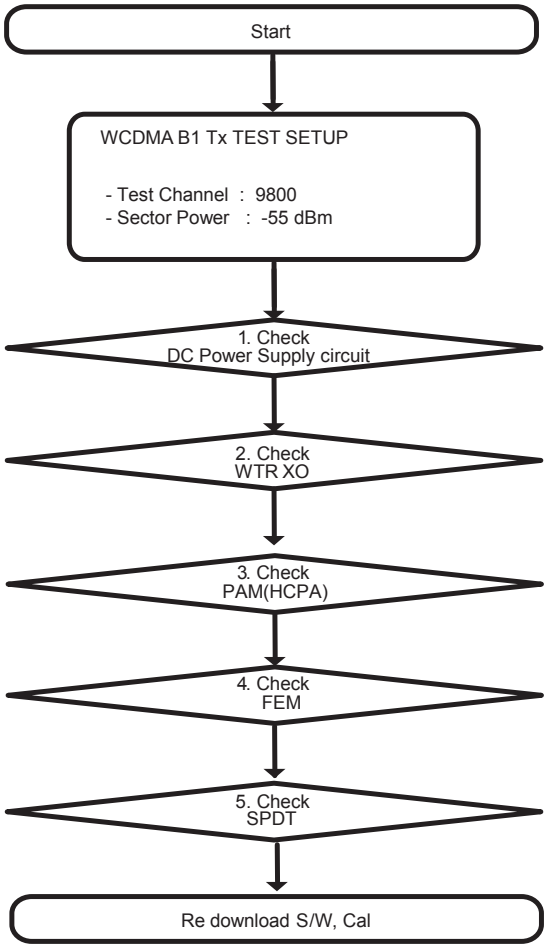

※ there are no Test Points on the IQ Data Line. So It is impossible to check the IQ Data Wave form

WCDMA B2 TX RF PATH

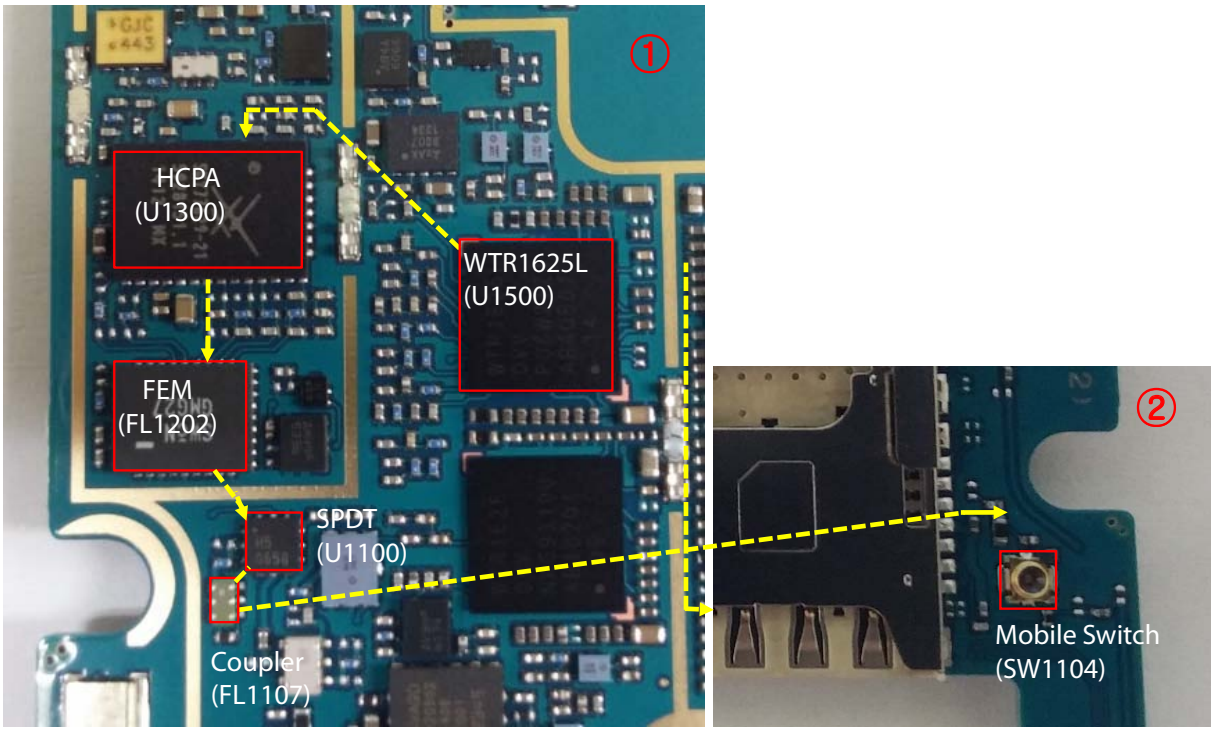

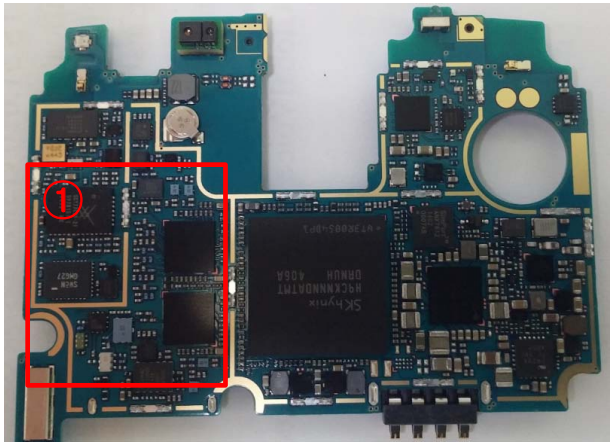

Top Side

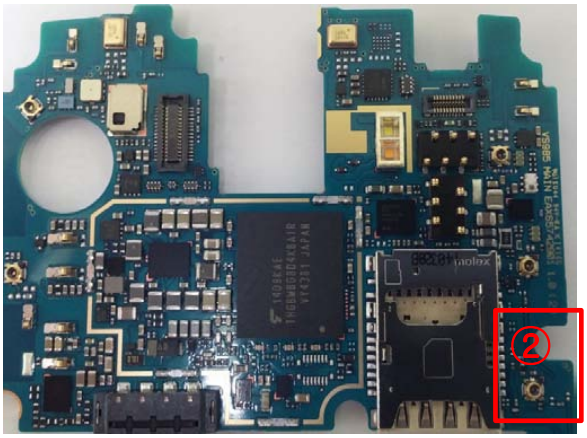

Bottom Side

3.2.1.1 Checking DC Power supply circuit (+1.3V_VREG_L4)

Test Point

TP1 : C1526
(+1.3V_VREG_L4)

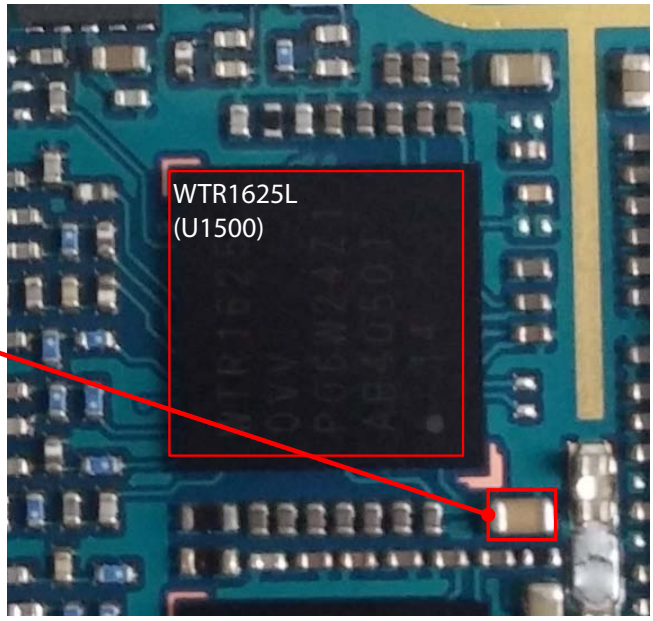

Top Side

Circuit Diagram

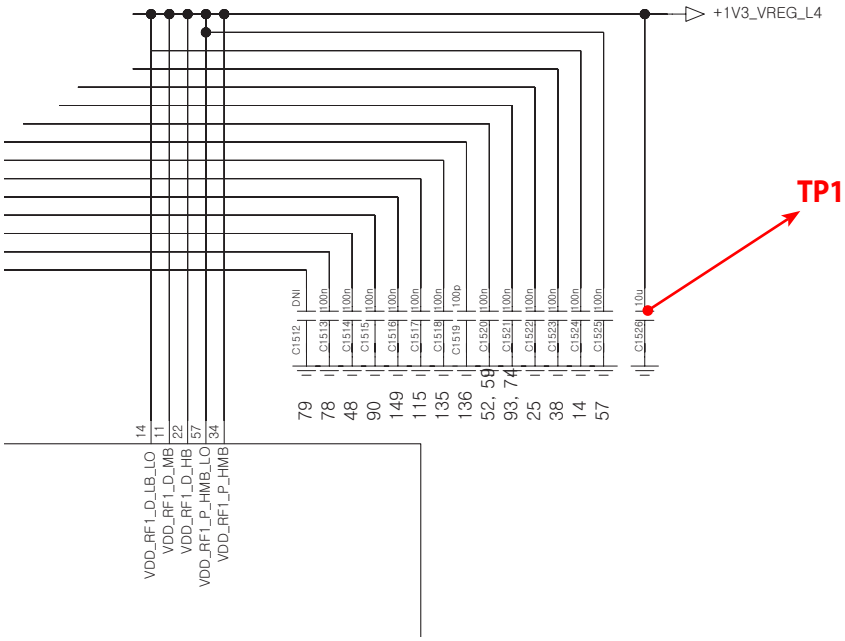

Test Point

TP3 : C1503
(+2.05V_VREG_L15)

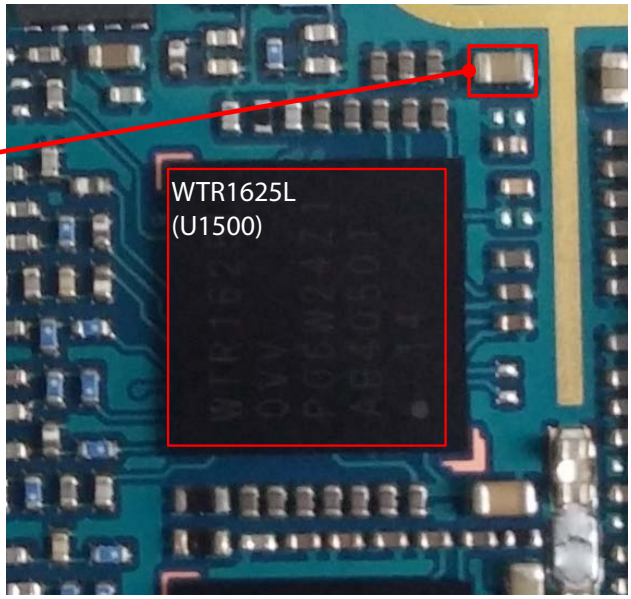

Top Side

Circuit Diagram

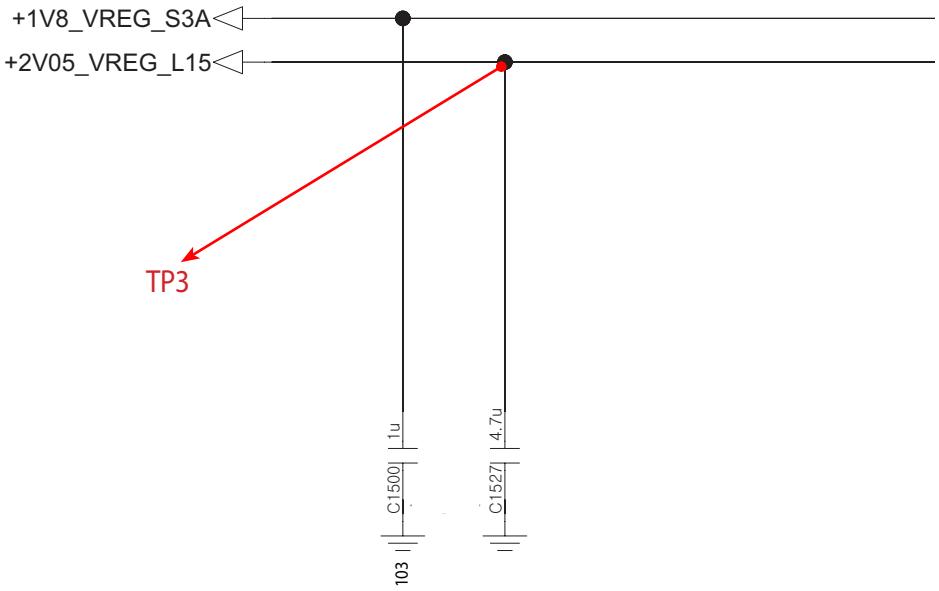

3.2.1.1 Checking DC Power supply circuit (+1.8V_VREG_S3A)

Test Point

TP2 : C1502
(+1.8V_VREG_S3A)

Top Side

Circuit Diagram

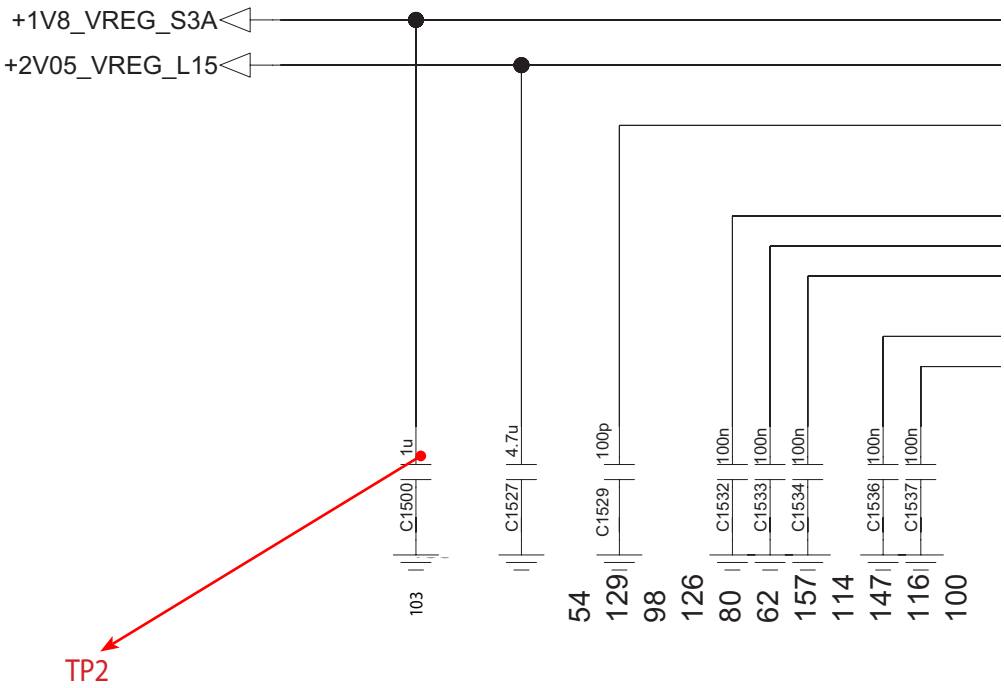

Checking Flow

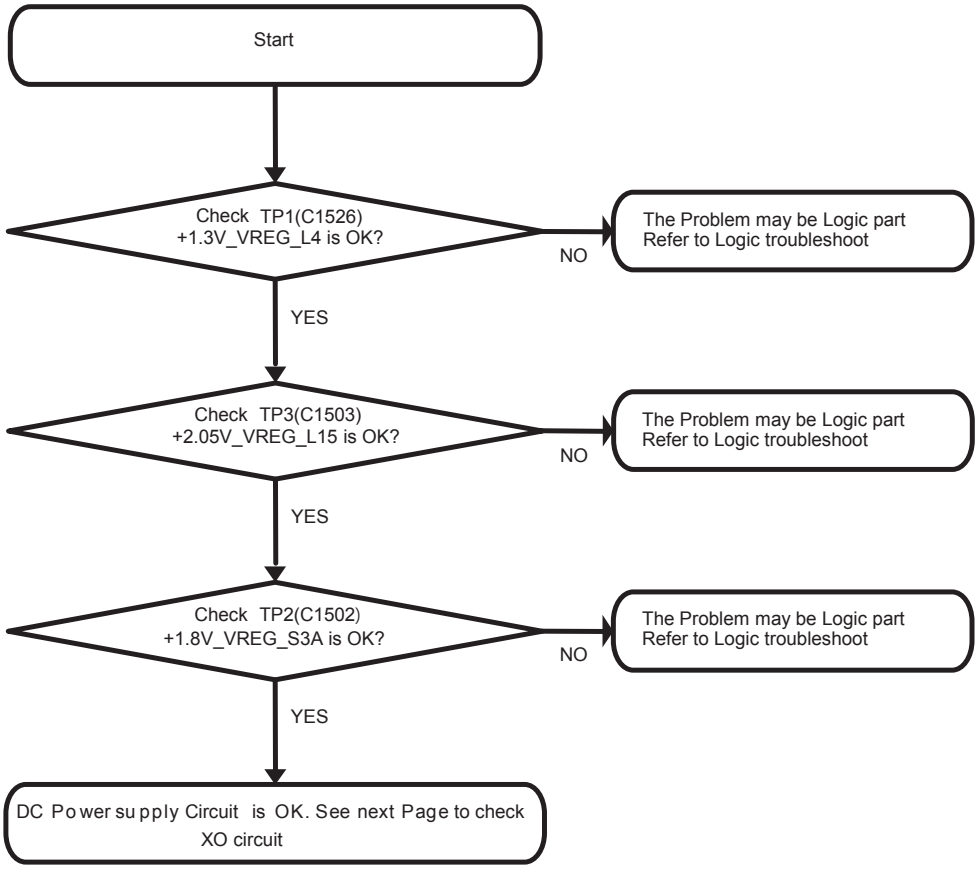

3.2.1.2 Checking WTR XO circuit

Test Point

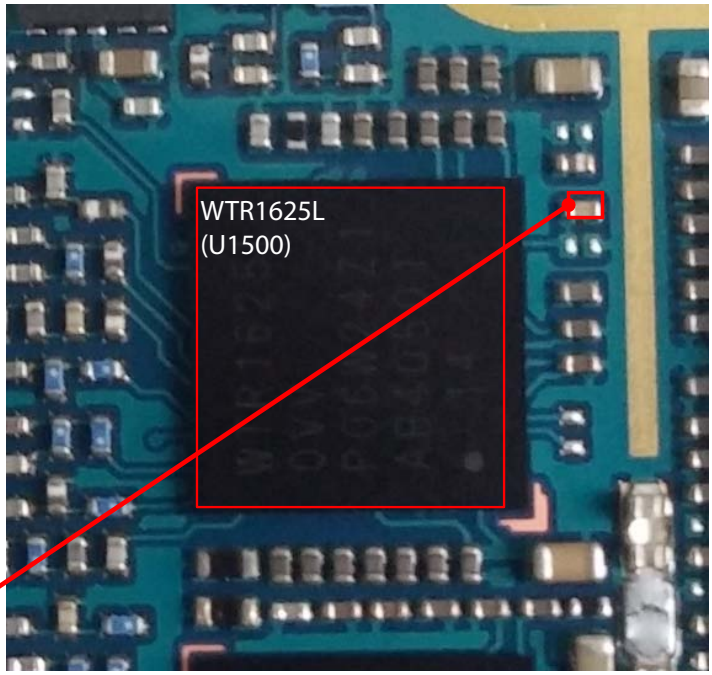

TP1 : C1561
(WTR_XO_IN)

Circuit Diagram

WTR_XO_IN

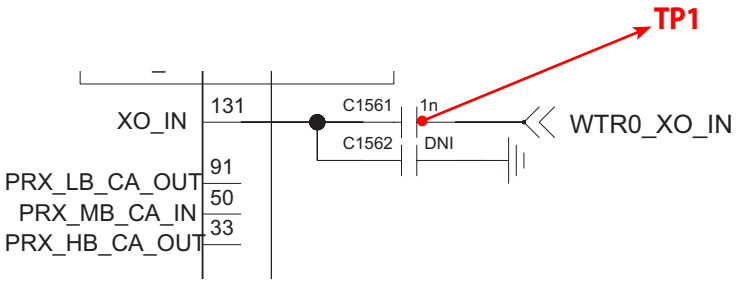

Checking Flow

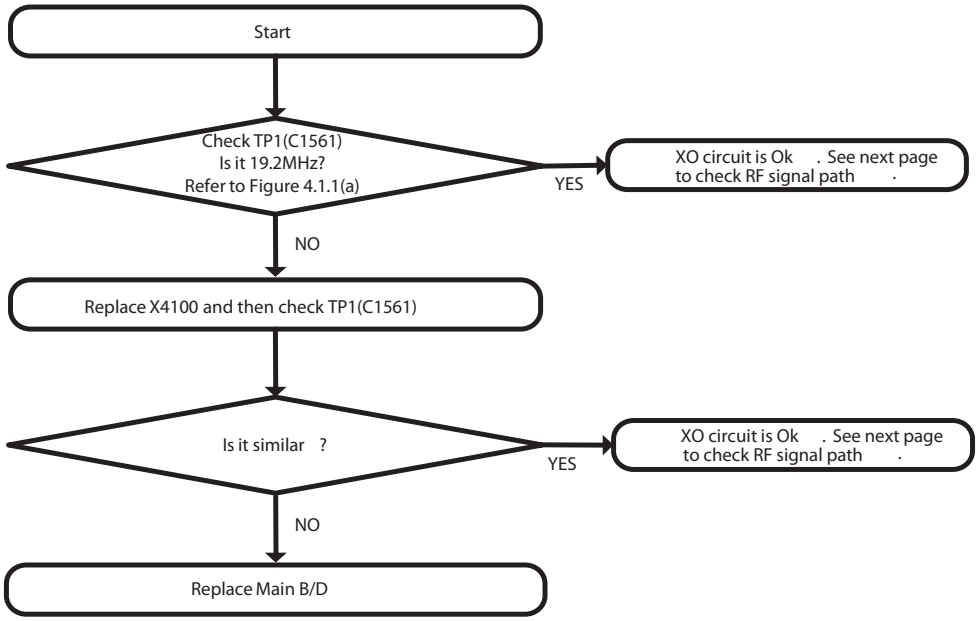

Waveform

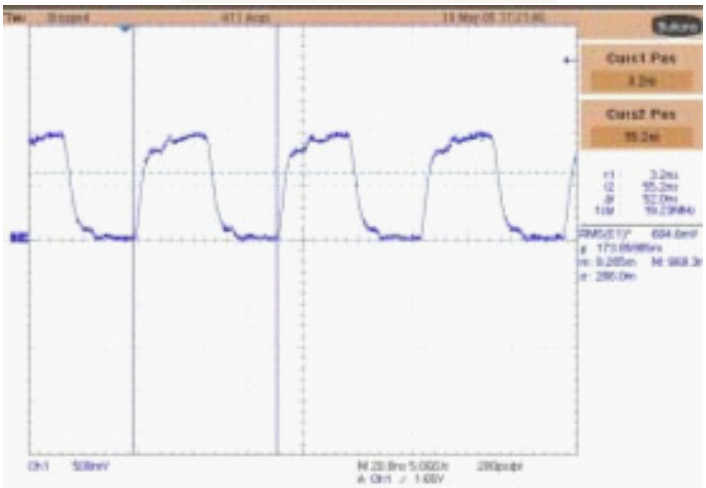

Figure 3.2.1.2 (a)

3.2.1.3 Checking WTR TX OUT circuit

Test Point

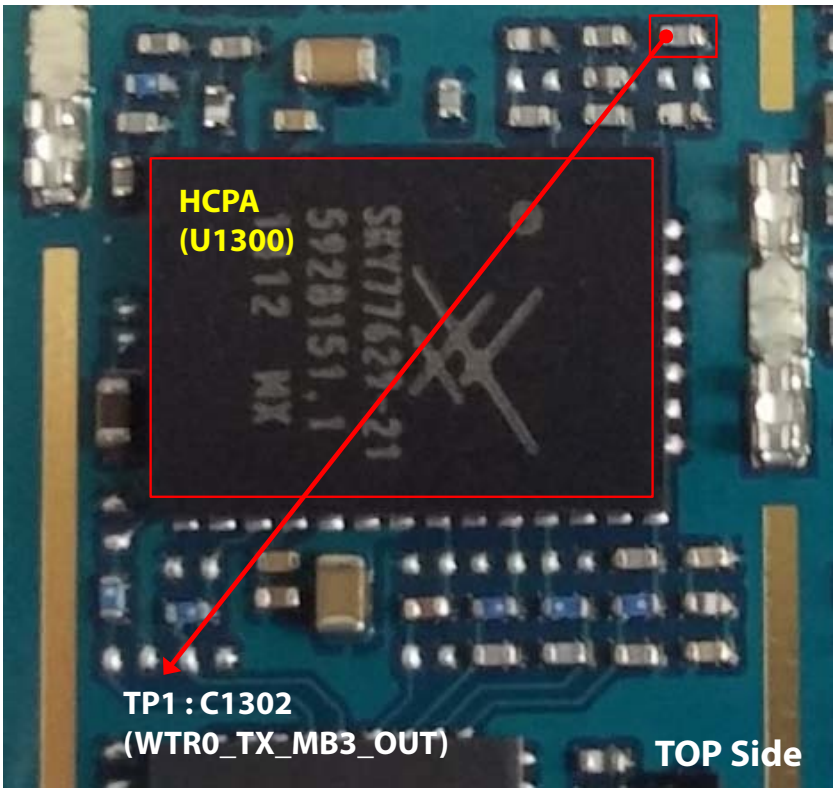

Circuit Diagram

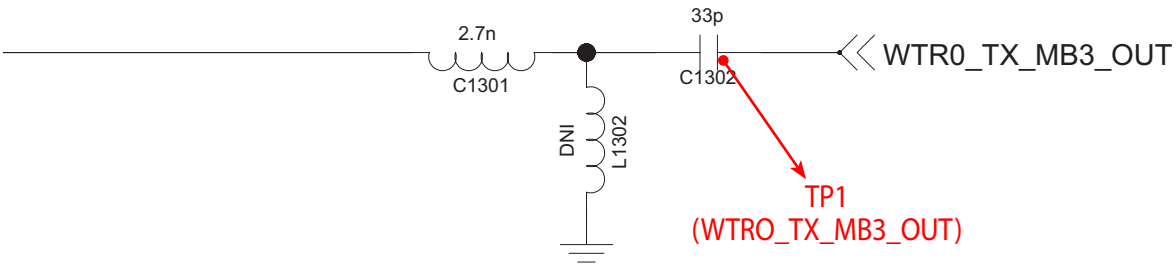

Checking Flow

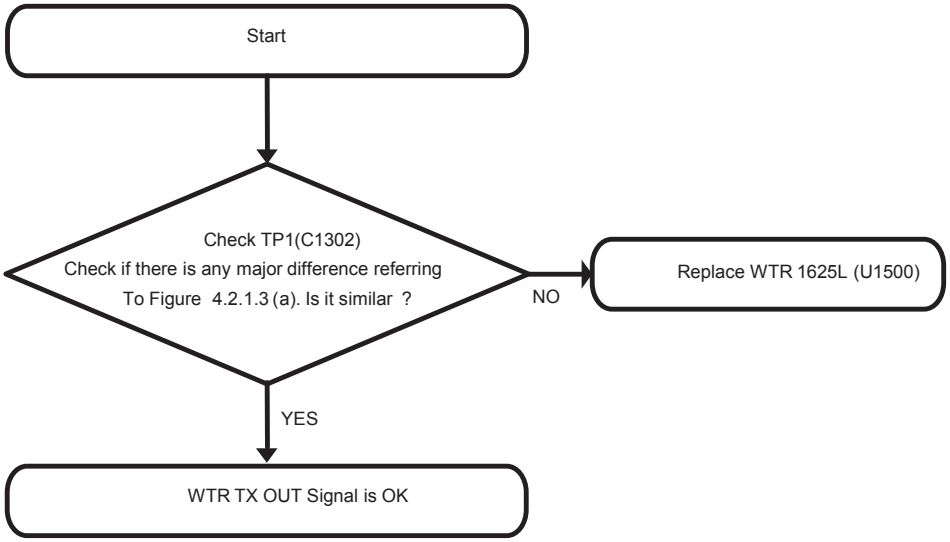

Waveform

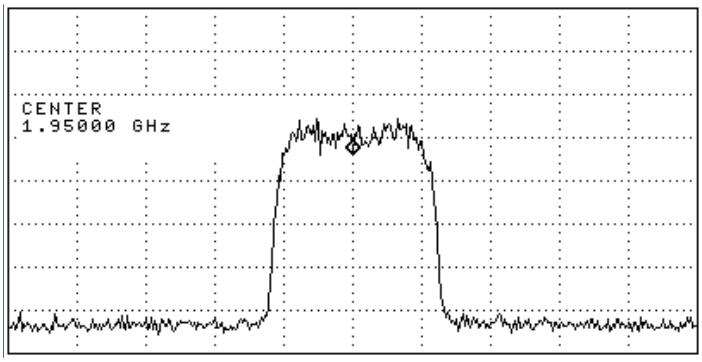

Figure 3.2.1.3 (a)

3.2.1.4 Check WCDMA B2 HCPA circuit

Test Point

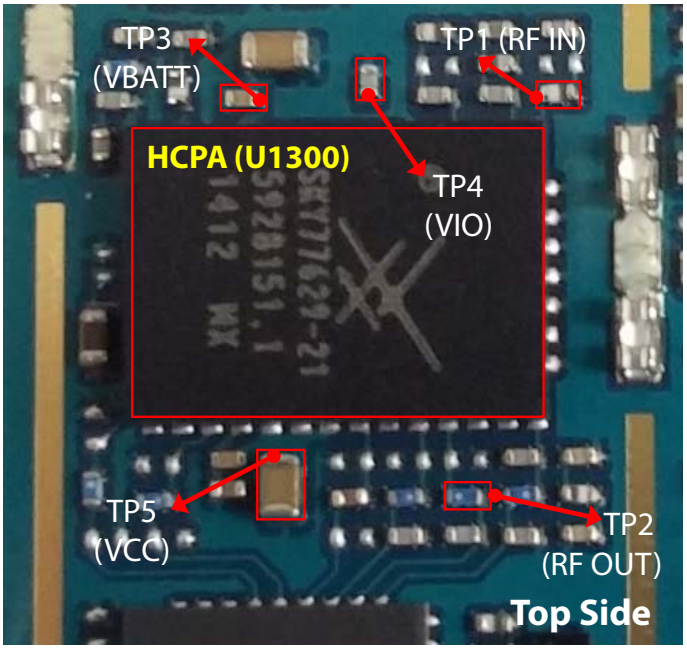

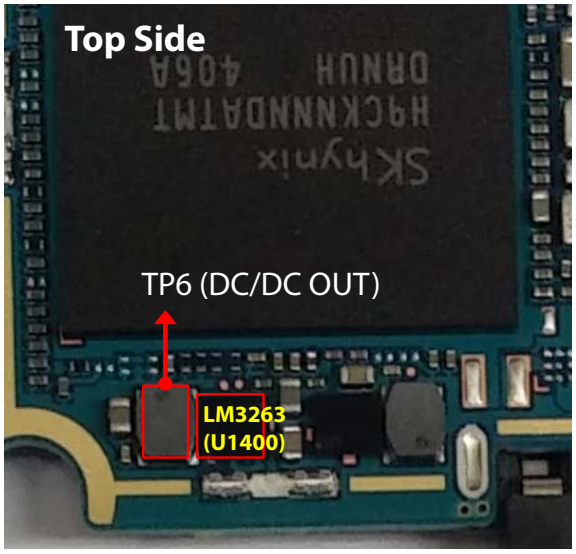

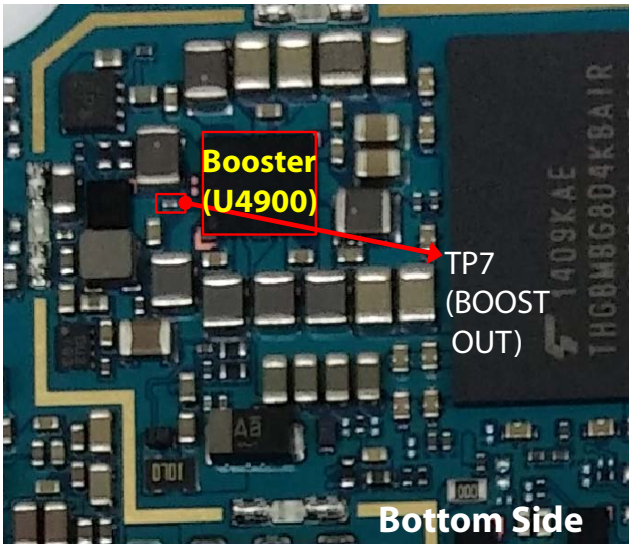

Circuit Diagram

HCPA_APT_SKY77629

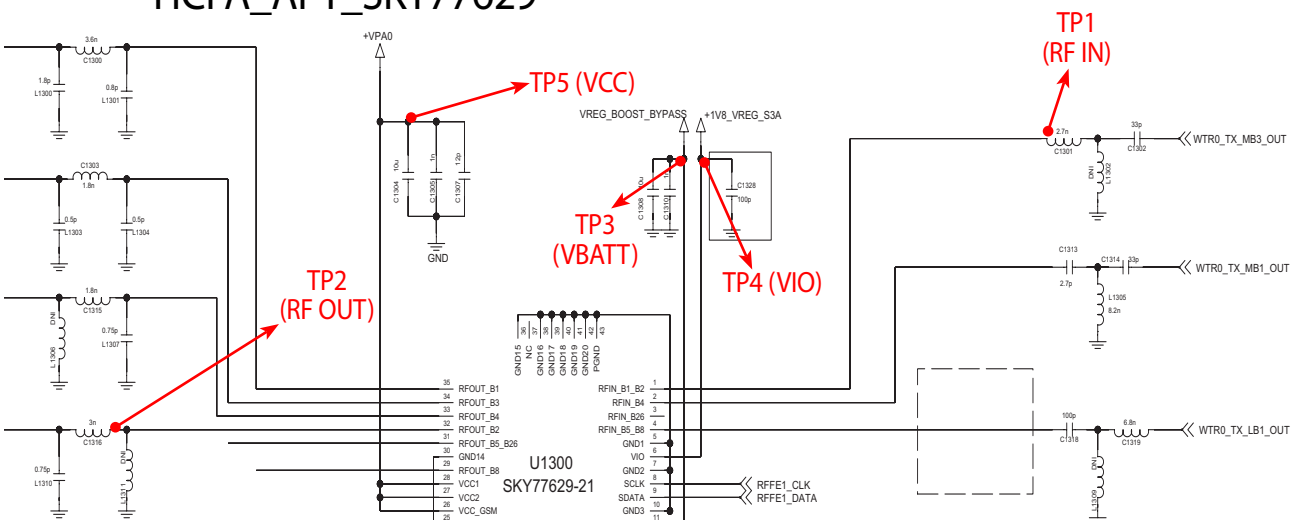

Global_LTE_APT_LM3263

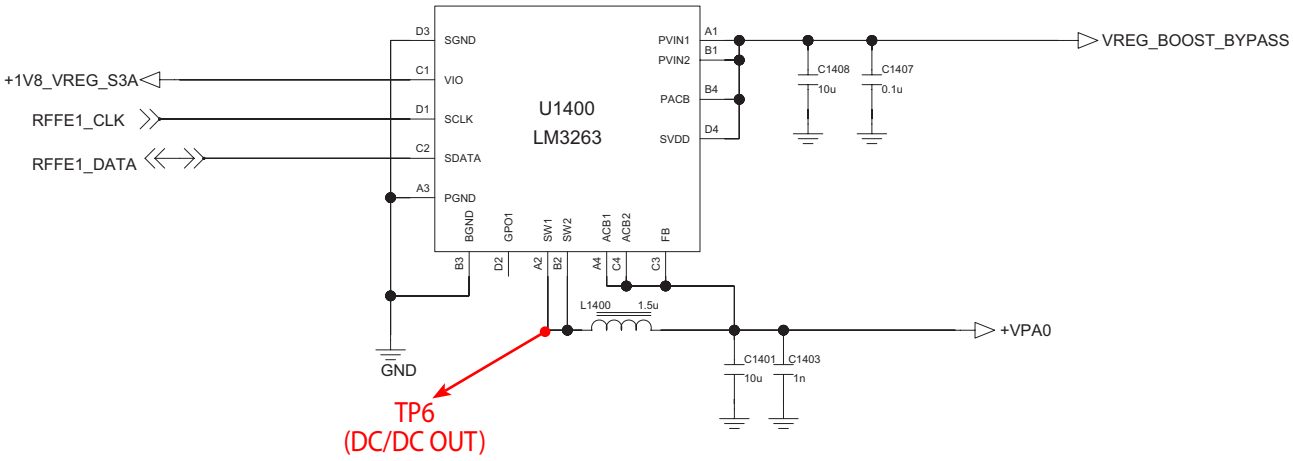

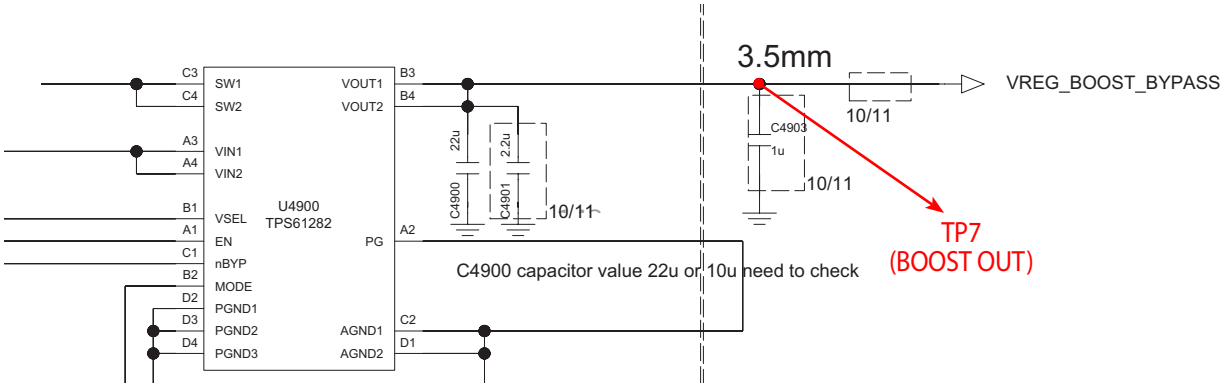

Checking Flow

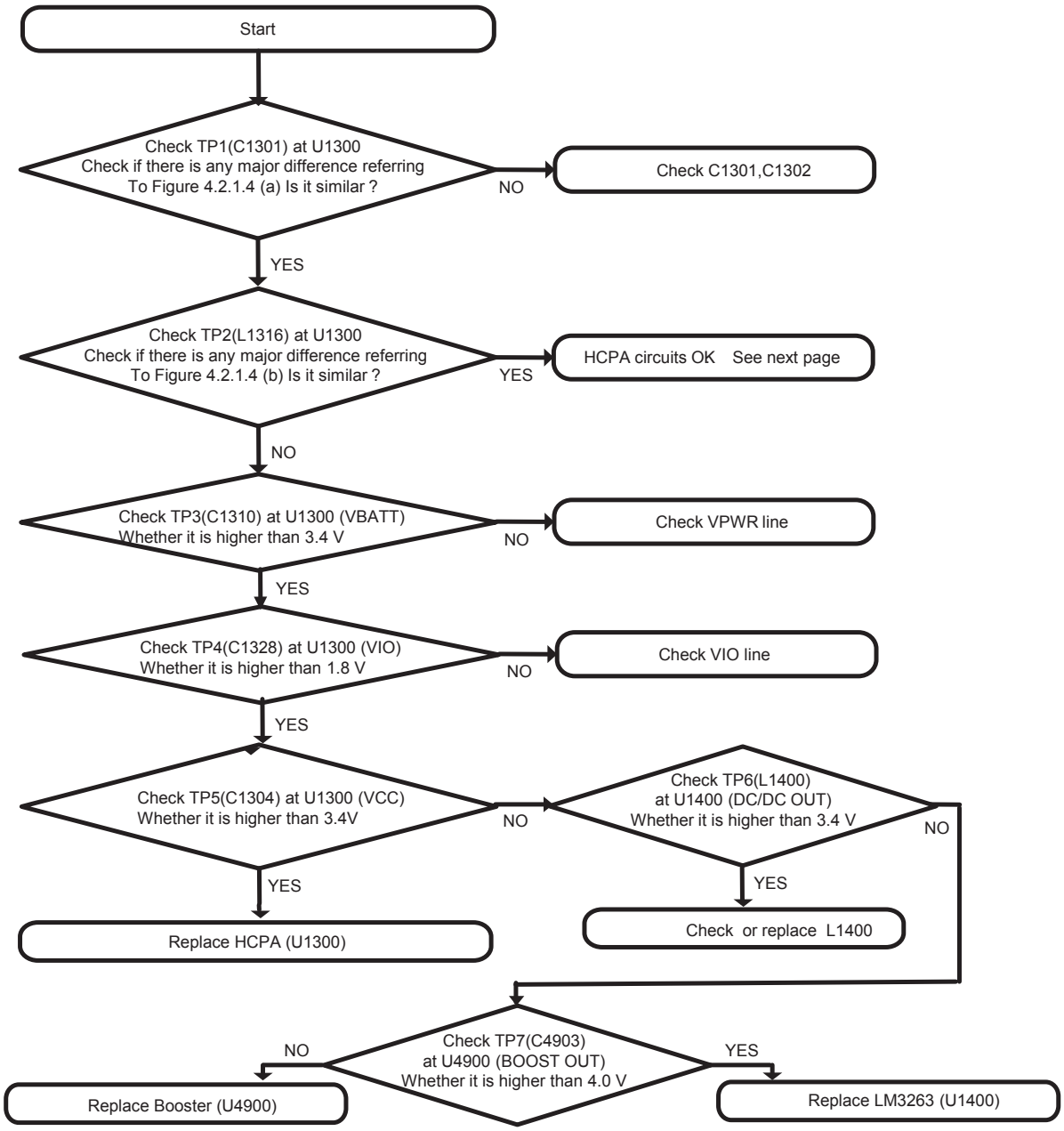

Waveform

TP1

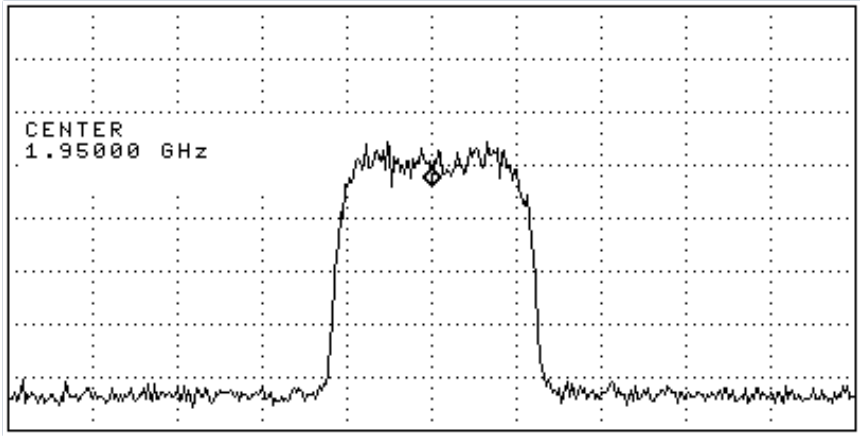

Figure 3.2.1.4 (a)

TP2

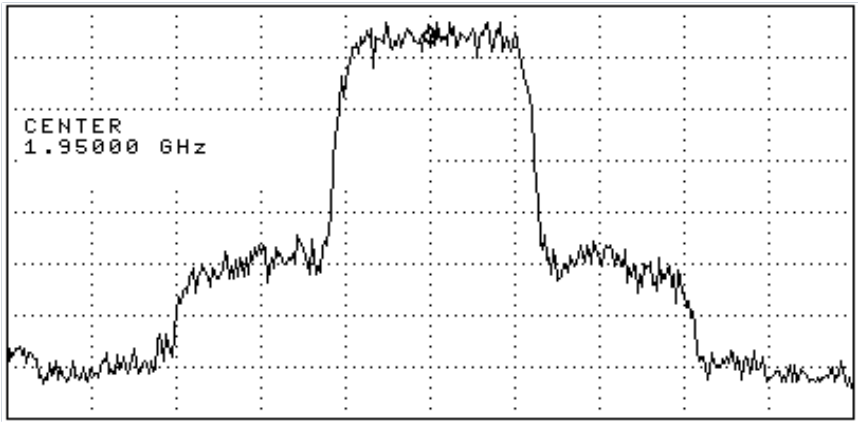

Figure 3.2.1.4 (b)

3.2.1.5 Checking RF signal path (FEM)

Test Point

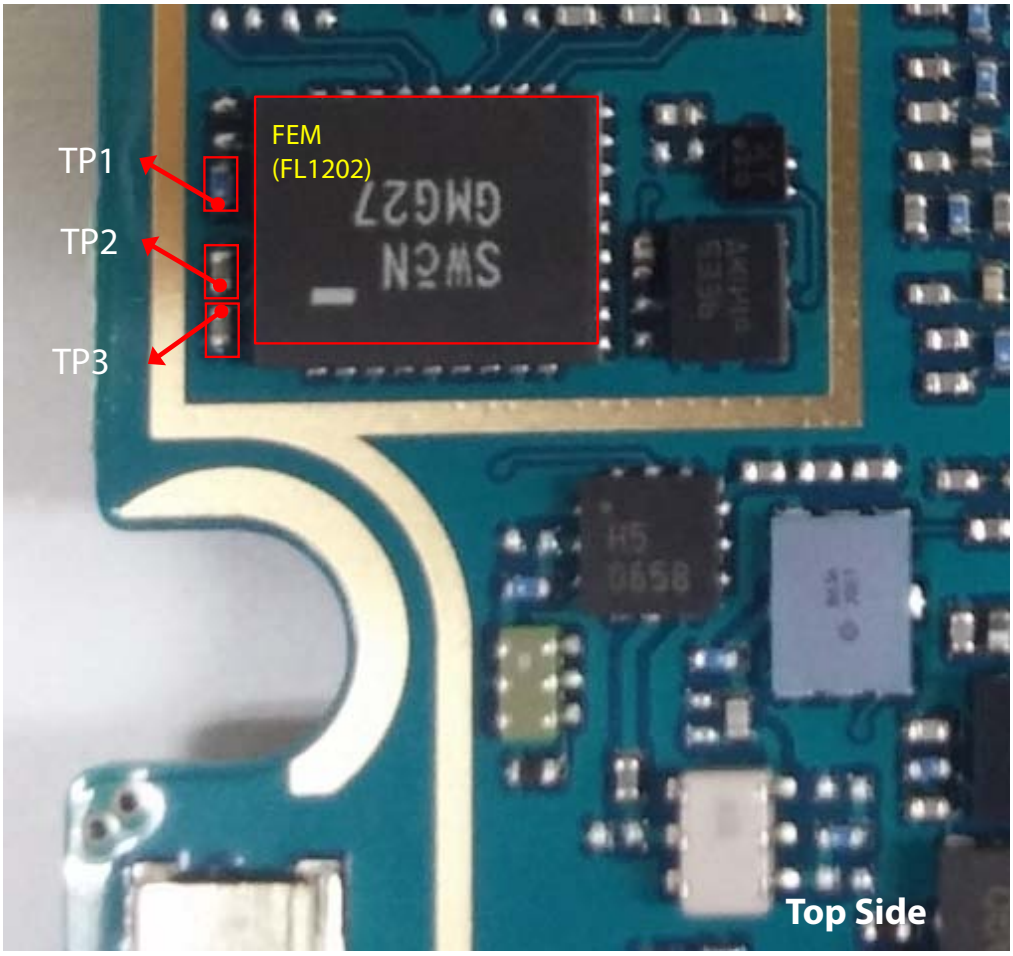

Circuit Diagram

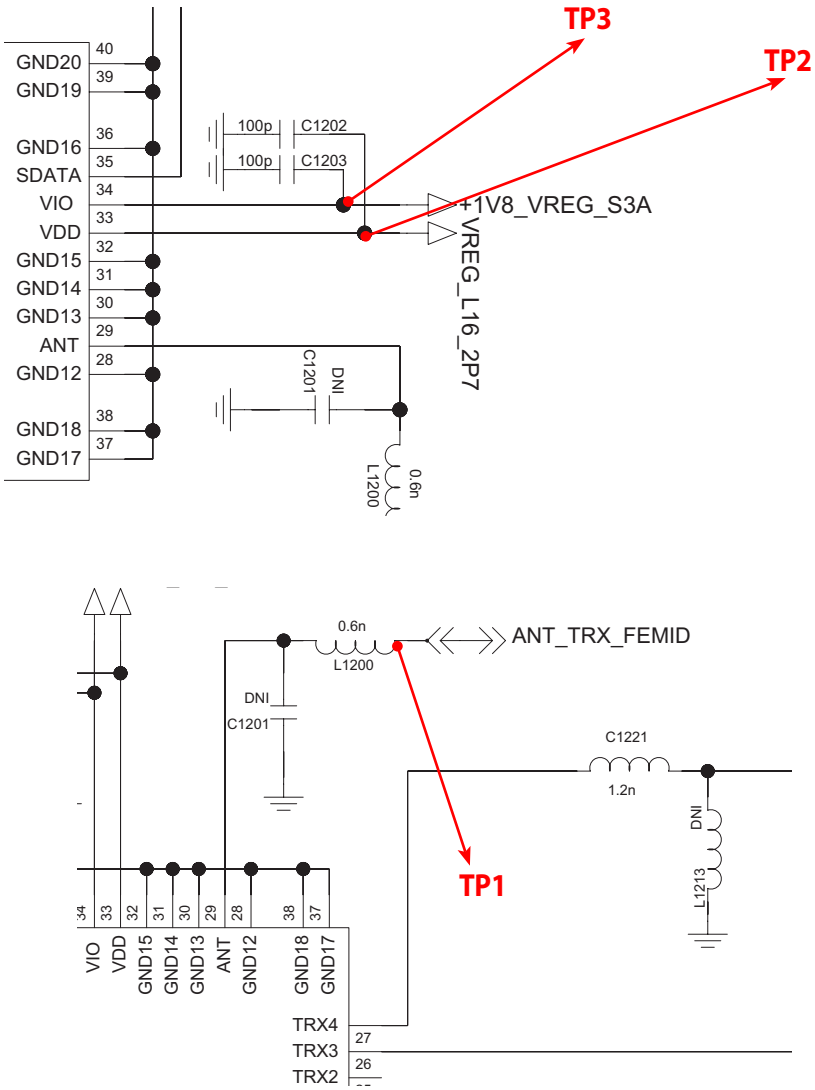

Checking Flow

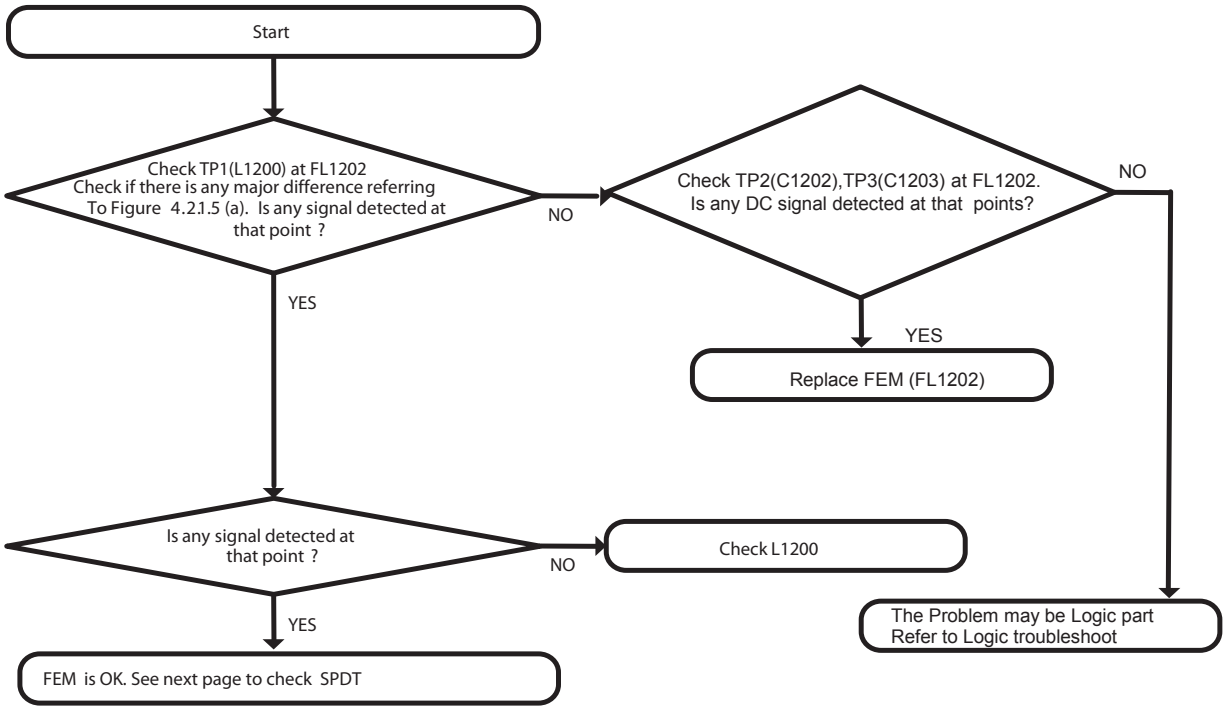

Waveform

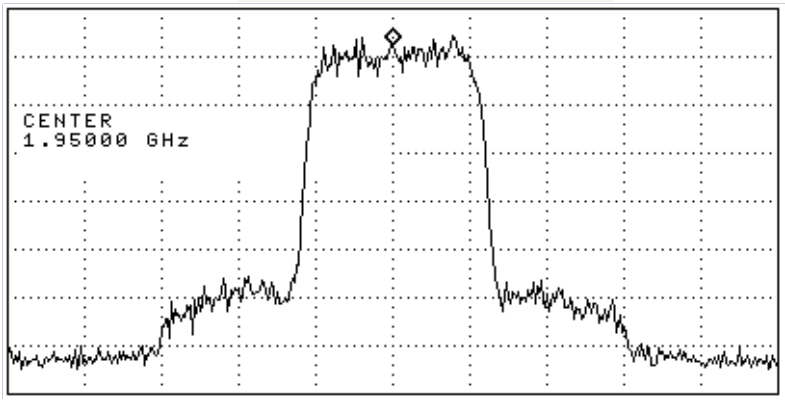

Figure 3.2.1.5 (a)

3.2.1.6 Checking RF signal path (SPDT)

Test Point

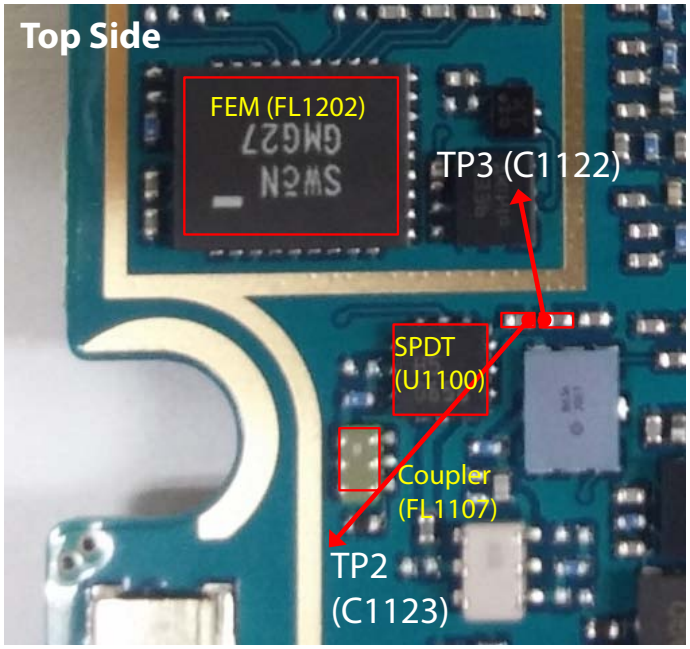

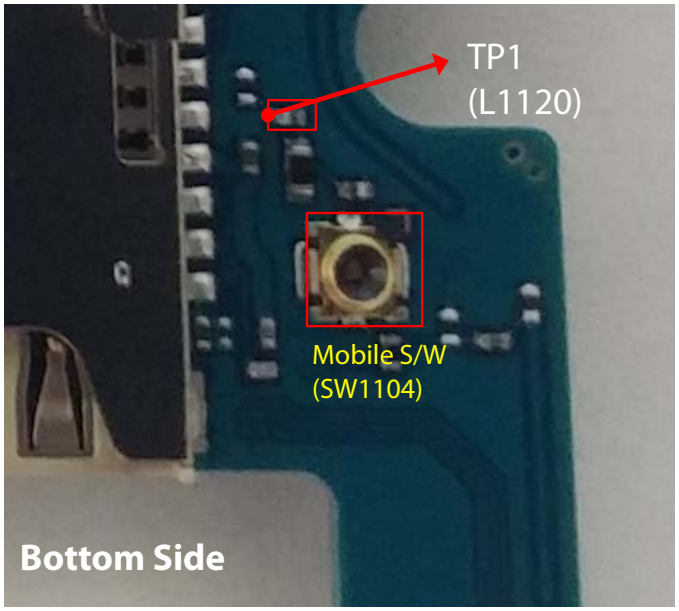

Circuit Diagram

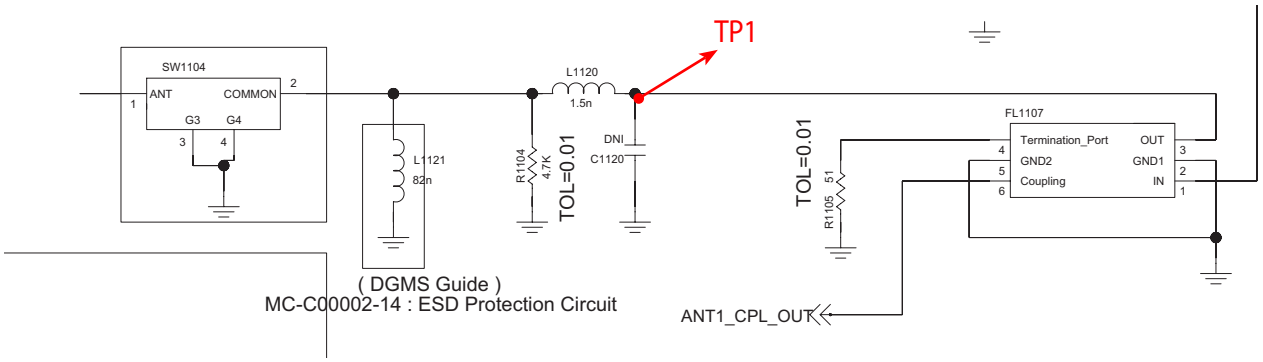

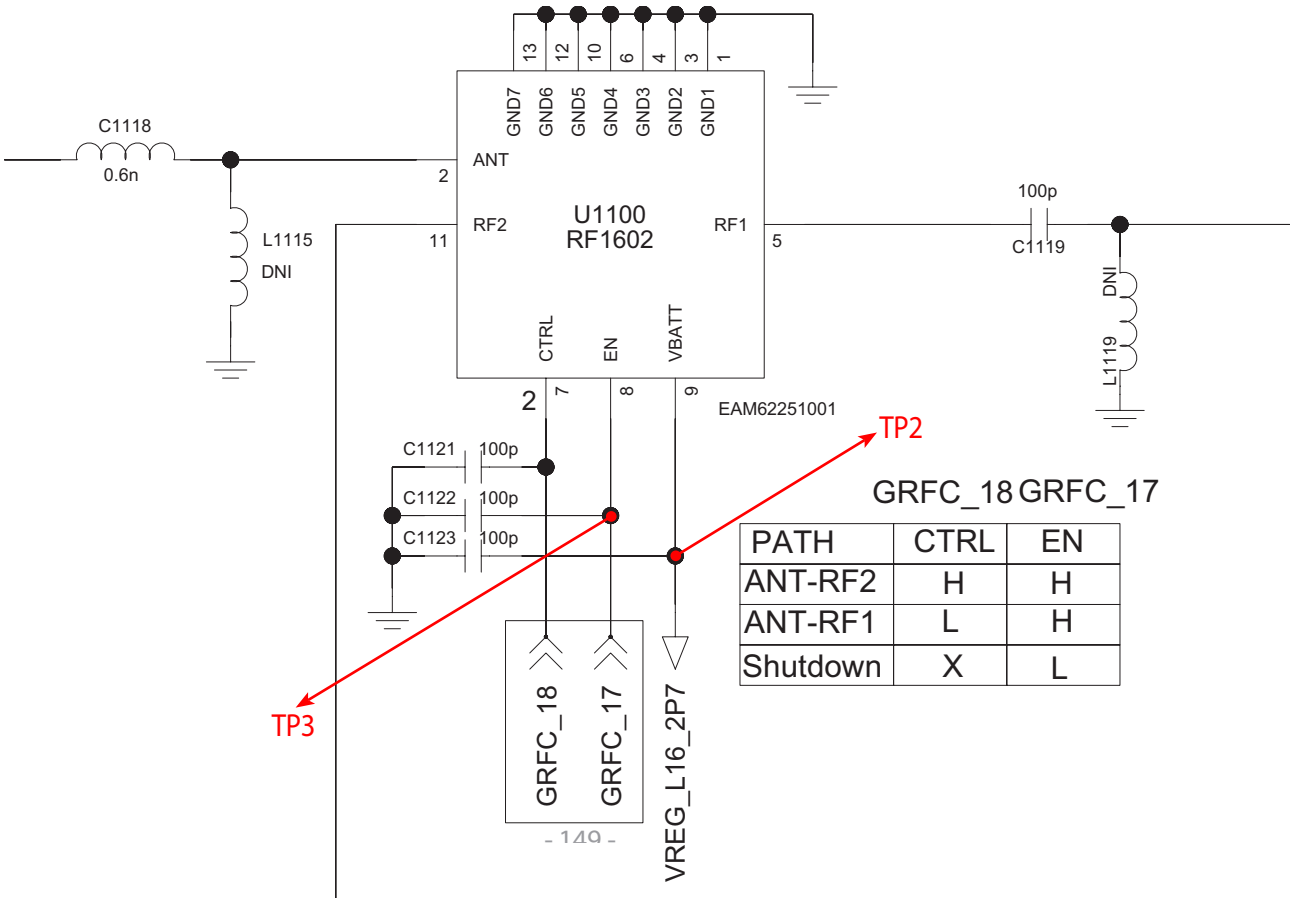

GRFC_18 GRFC_17

PATH	CTRL	EN
ANT-RF2	H	H
ANT-RF1	L	H
Shutdown	X	L

Checking Flow

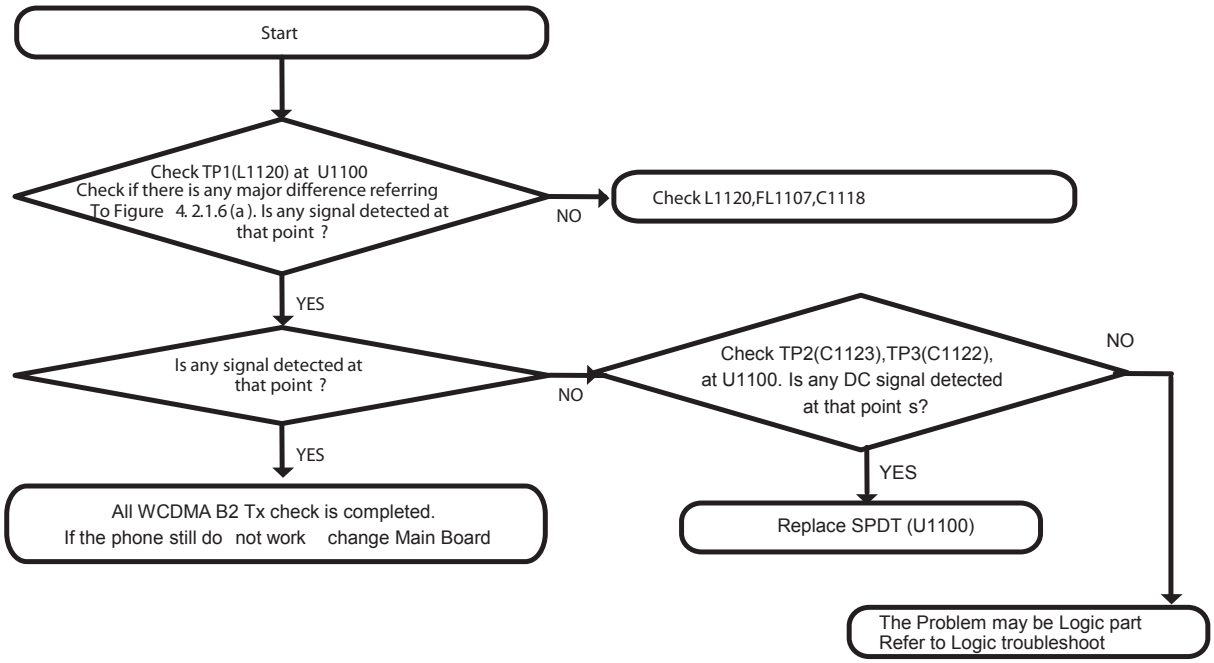

Waveform

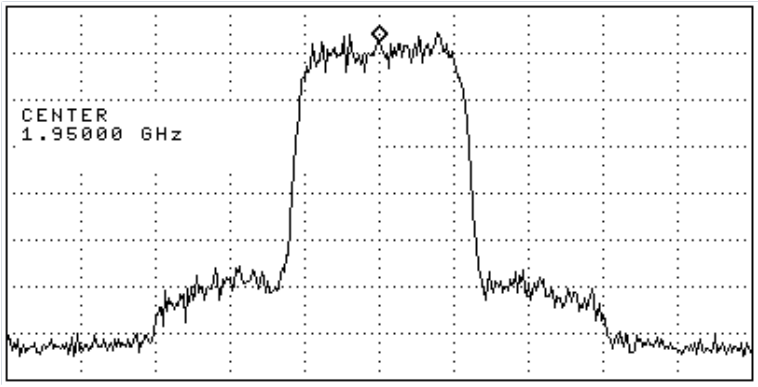

Figure 3.2.1.6 (a)

3.2.1 WCDMA_B5 Tx

Checking Flow

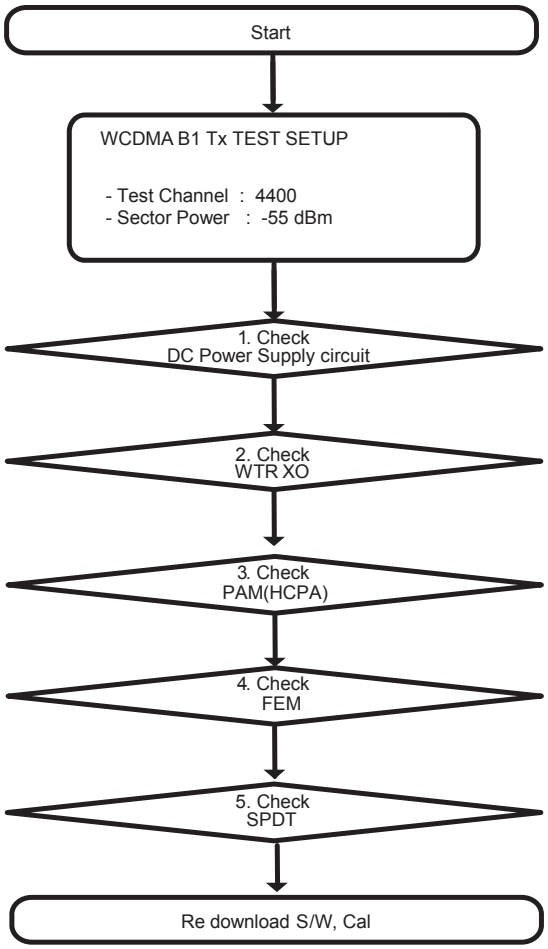

※ there are no Test Points on the IQ Data Line. So It is impossible to check the IQ Data Wave form

WCDMA B5 TX RF PATH

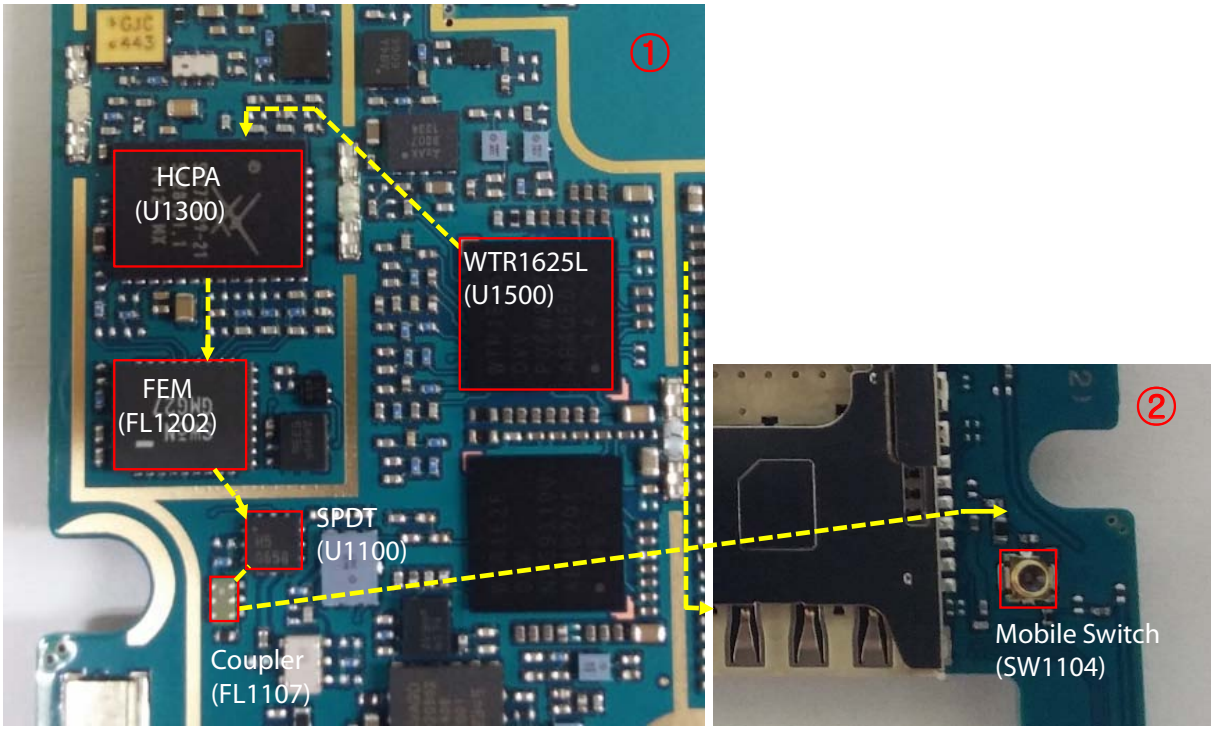

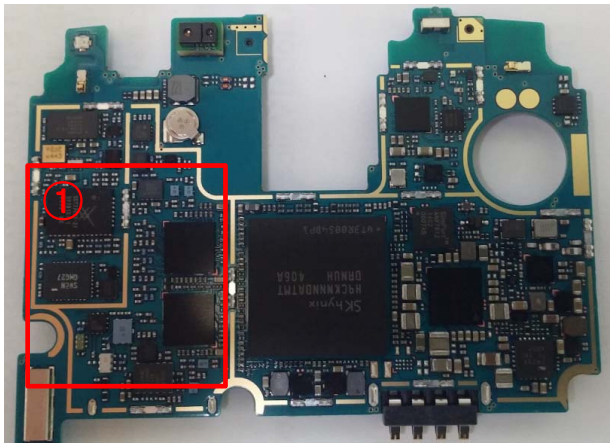

Top Side

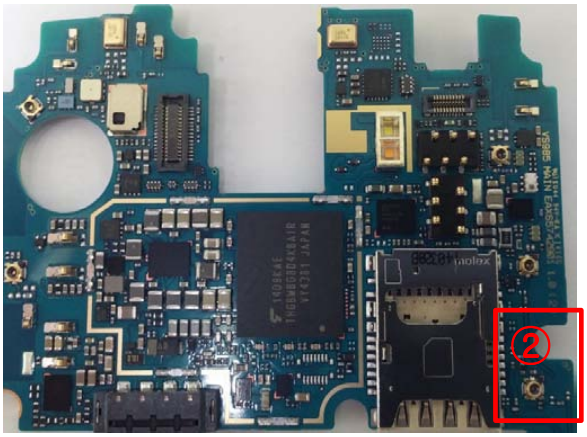

Bottom Side

3.2.1.1 Checking DC Power supply circuit (+1.3V_VREG_L4)

Test Point

TP1 : C1526
(+1.3V_VREG_L4)

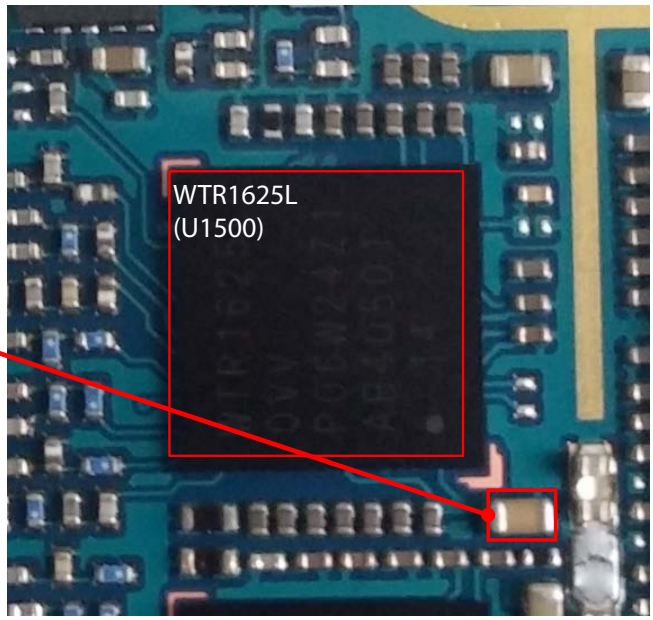

Top Side

Circuit Diagram

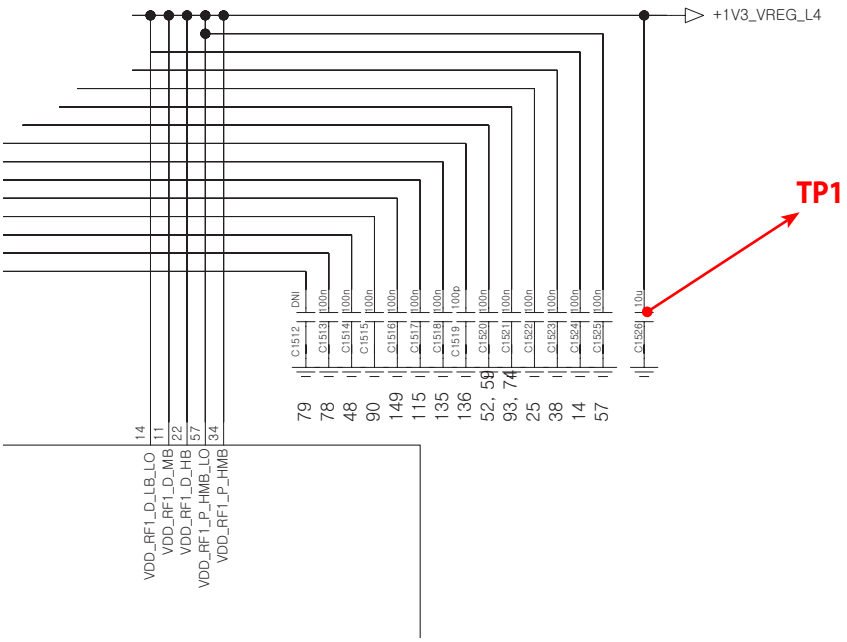

Test Point

TP3 : C1503
(+2.05V_VREG_L15)

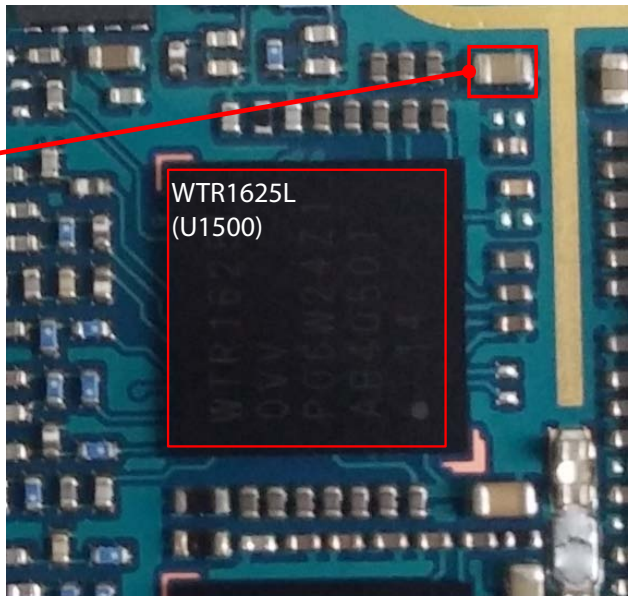

Top Side

Circuit Diagram

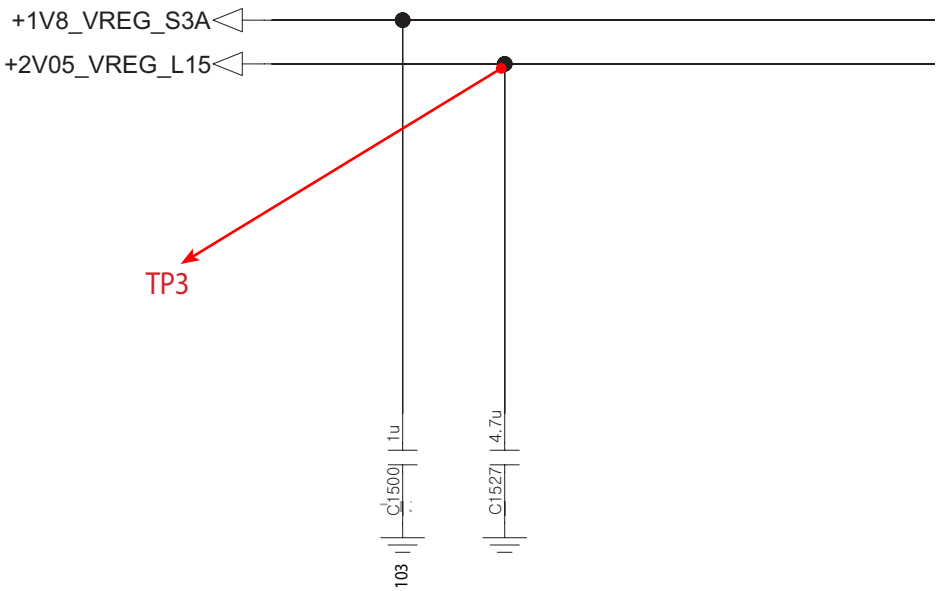

Test Point

TP2 : C1502
(+1.8V_VREG_S3A)

Top Side

Circuit Diagram

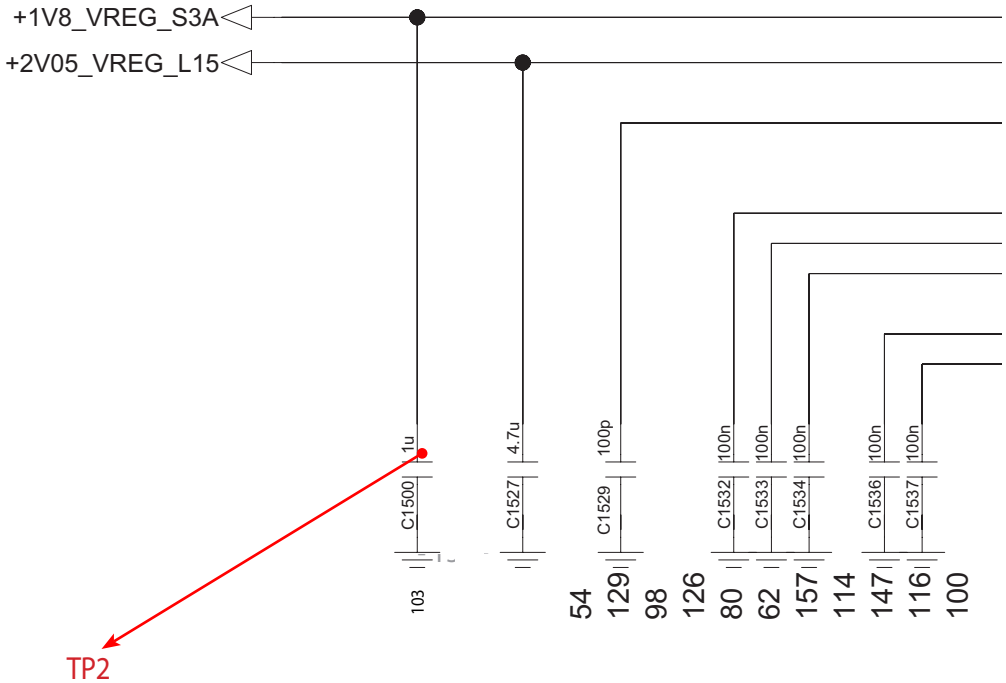

Checking Flow

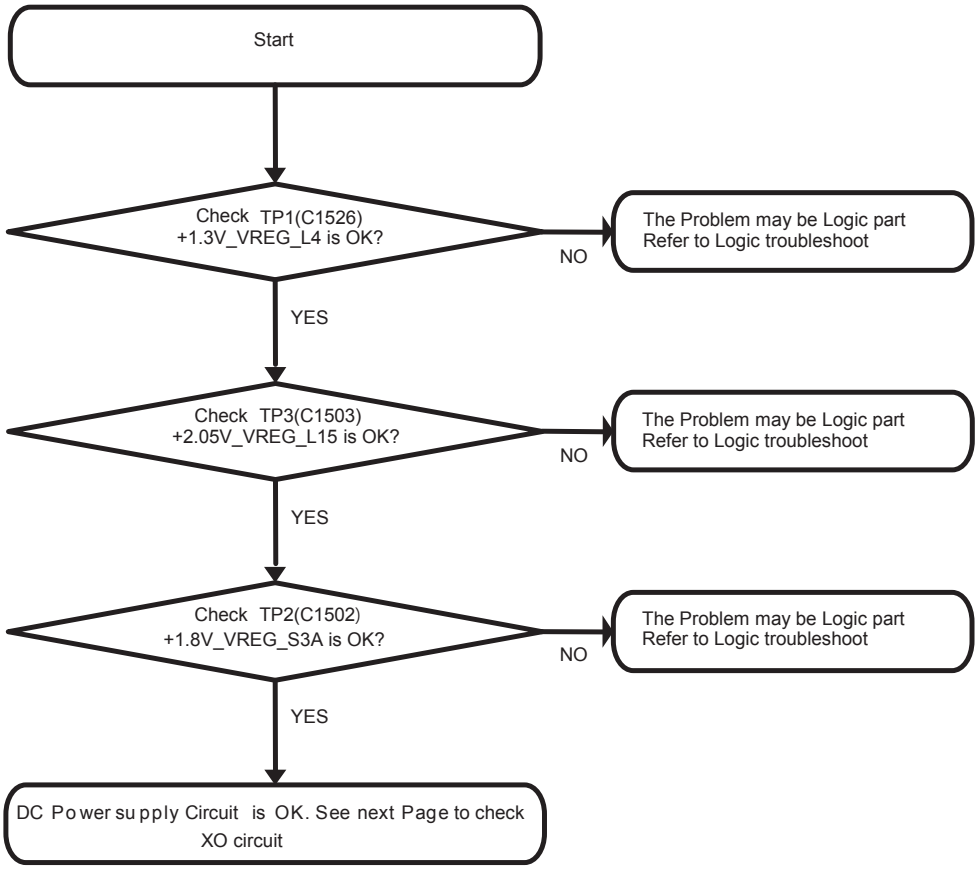

3.2.1.2 Checking WTR XO circuit

Test Point

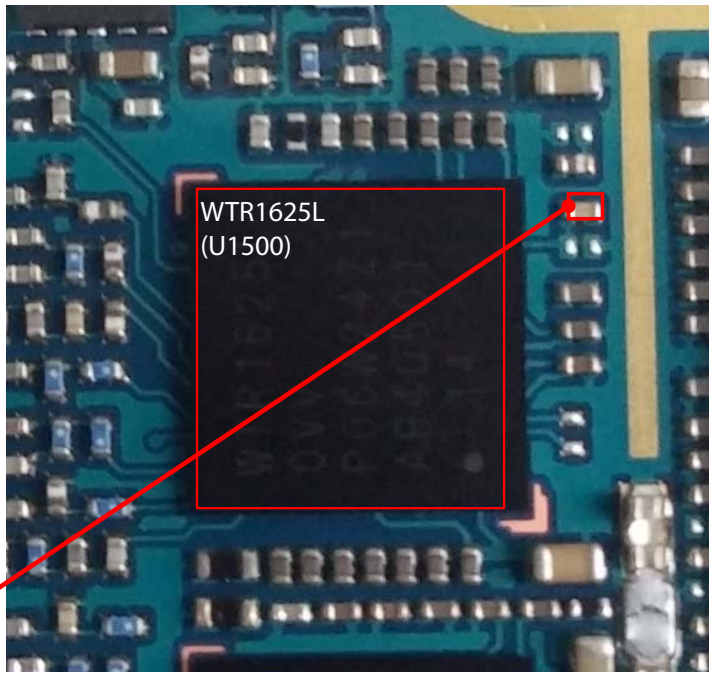

TP1 : C1561
(WTR_XO_IN)

Circuit Diagram

WTR_XO_IN

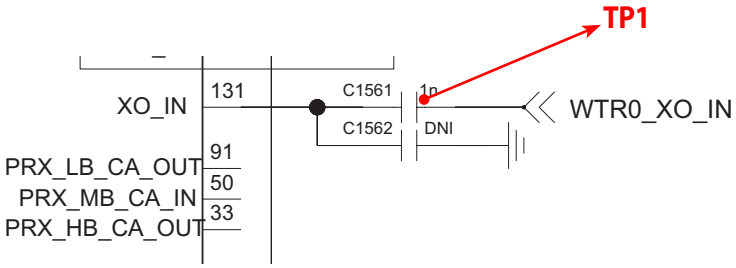

Checking Flow

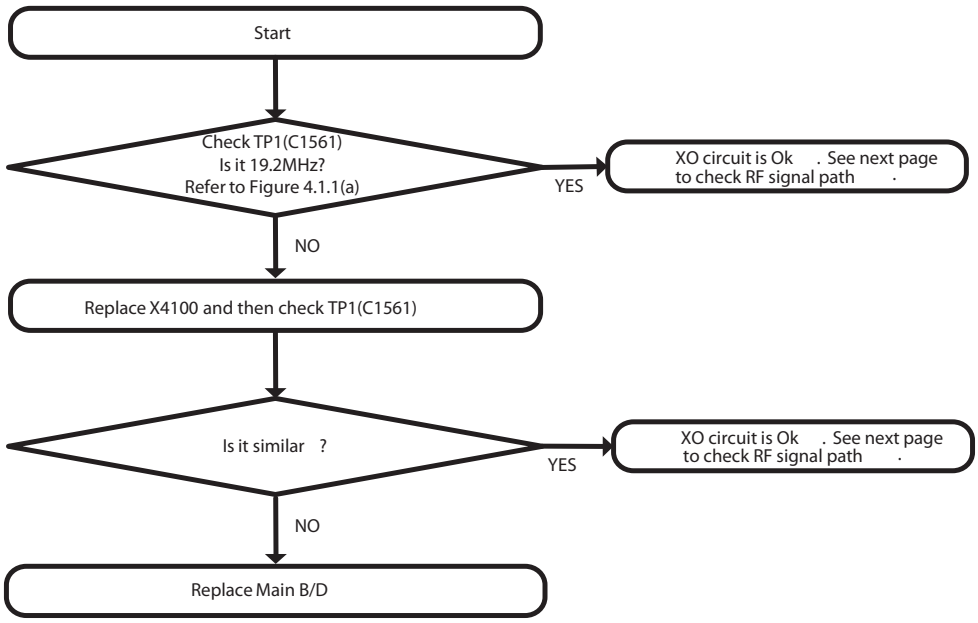

Waveform

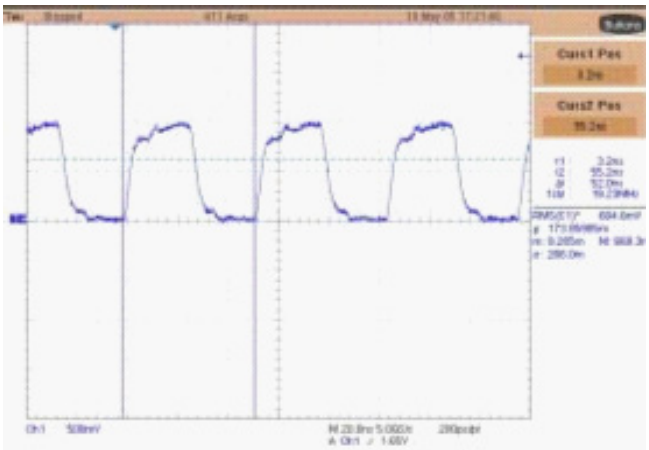

Figure 3.2.1.2 (a)

3.2.1.3 Checking WTR TX OUT circuit

Test Point

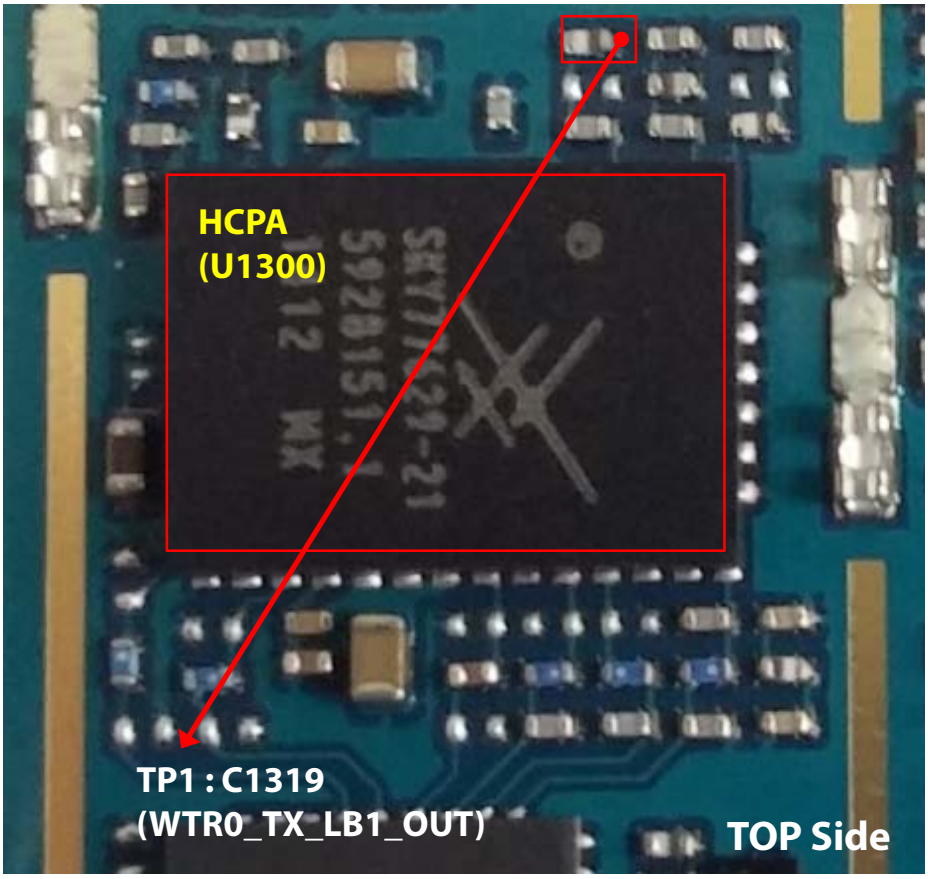

Circuit Diagram

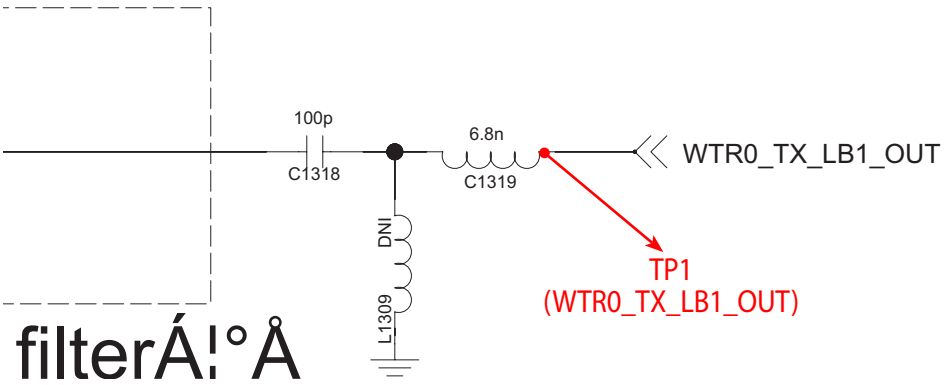

Checking Flow

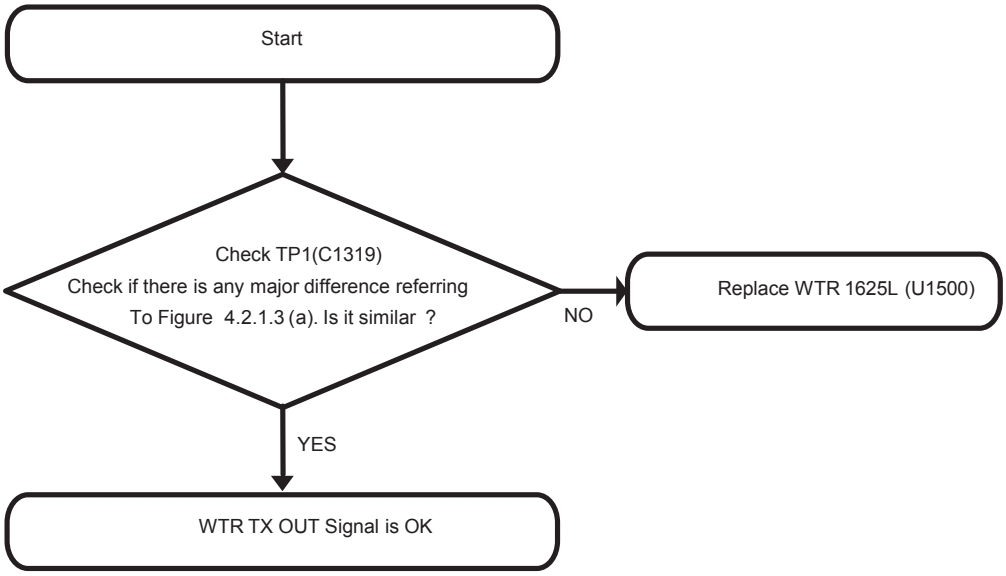

Waveform

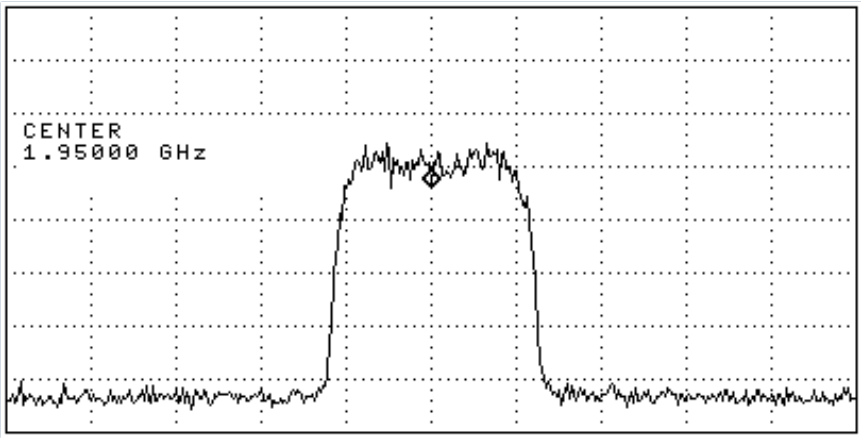

Figure 3.2.1.3(a)

3.2.1.4 Check WCDMA B5 HCPA circuit

Test Point

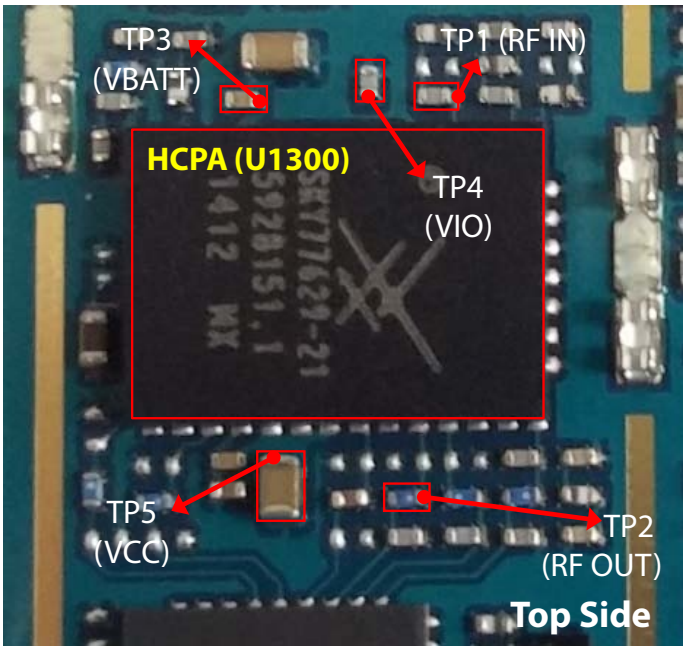

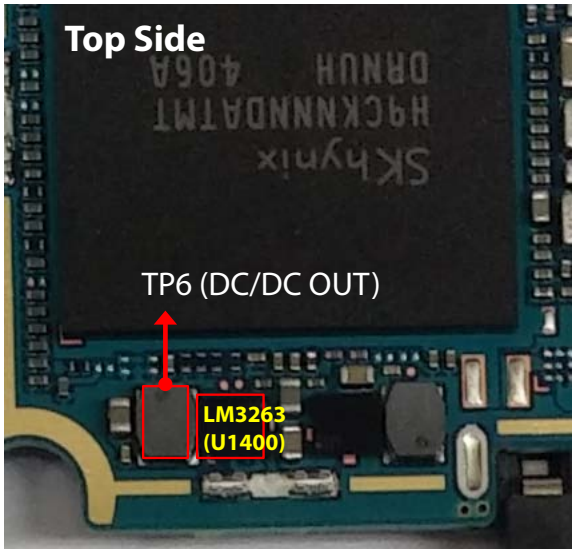

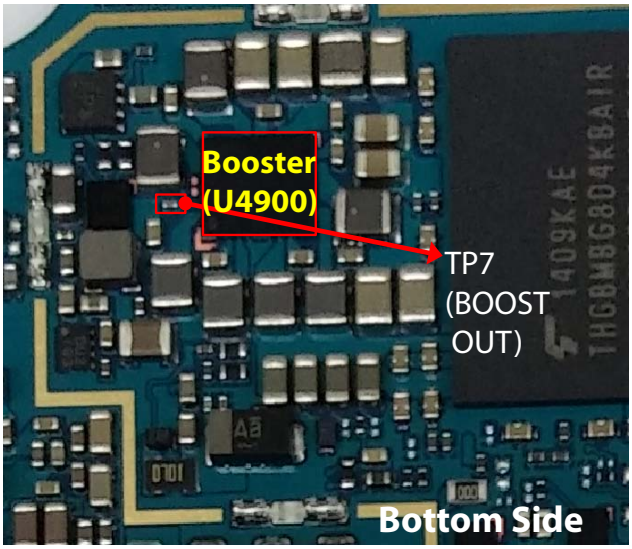

Circuit Diagram

HCPA_APT_SKY77629

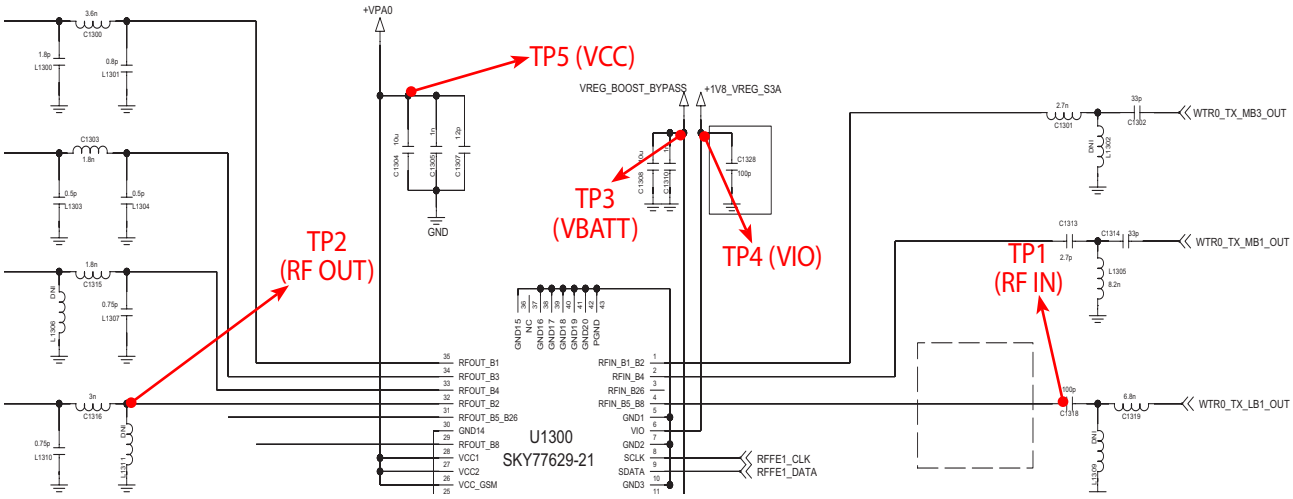

Global_LTE_APT_LM3263

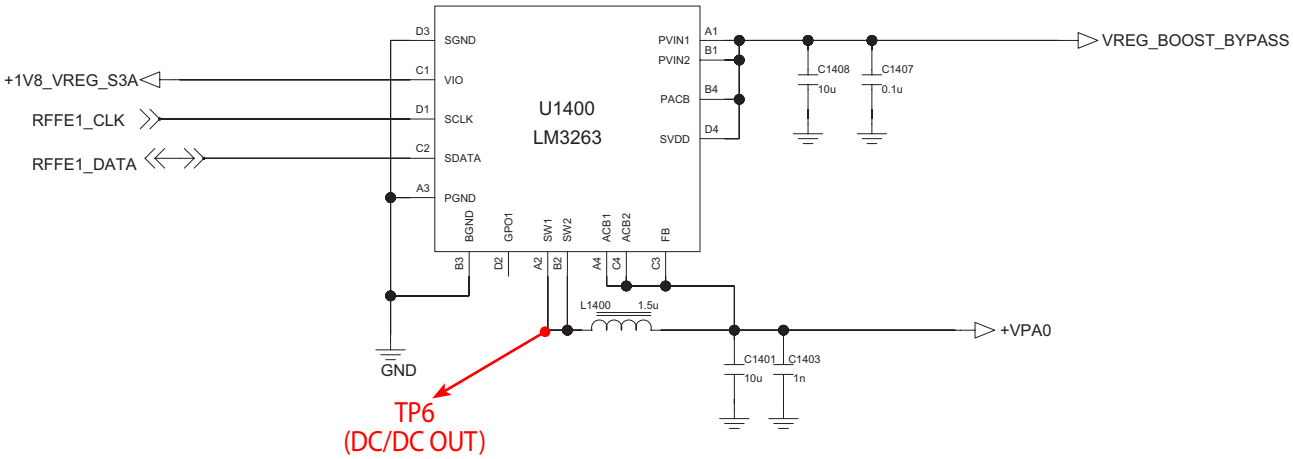

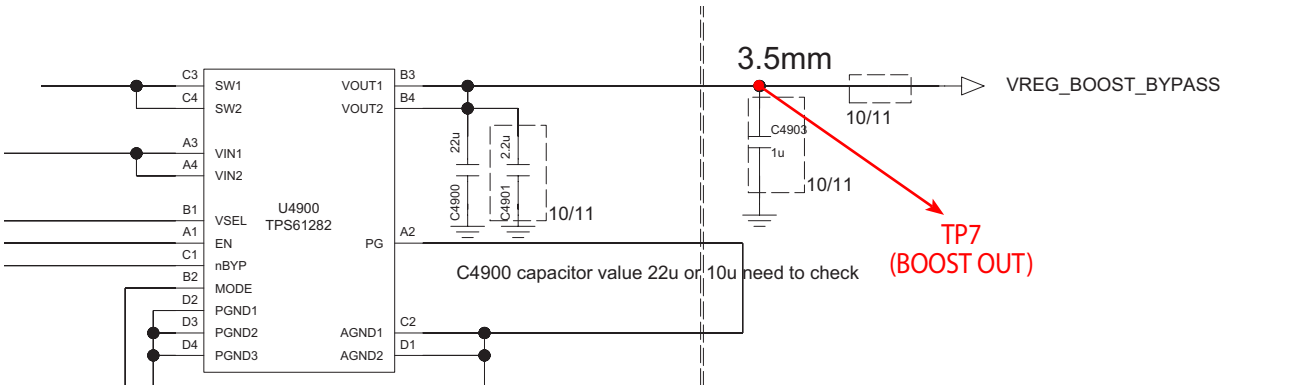

Checking Flow

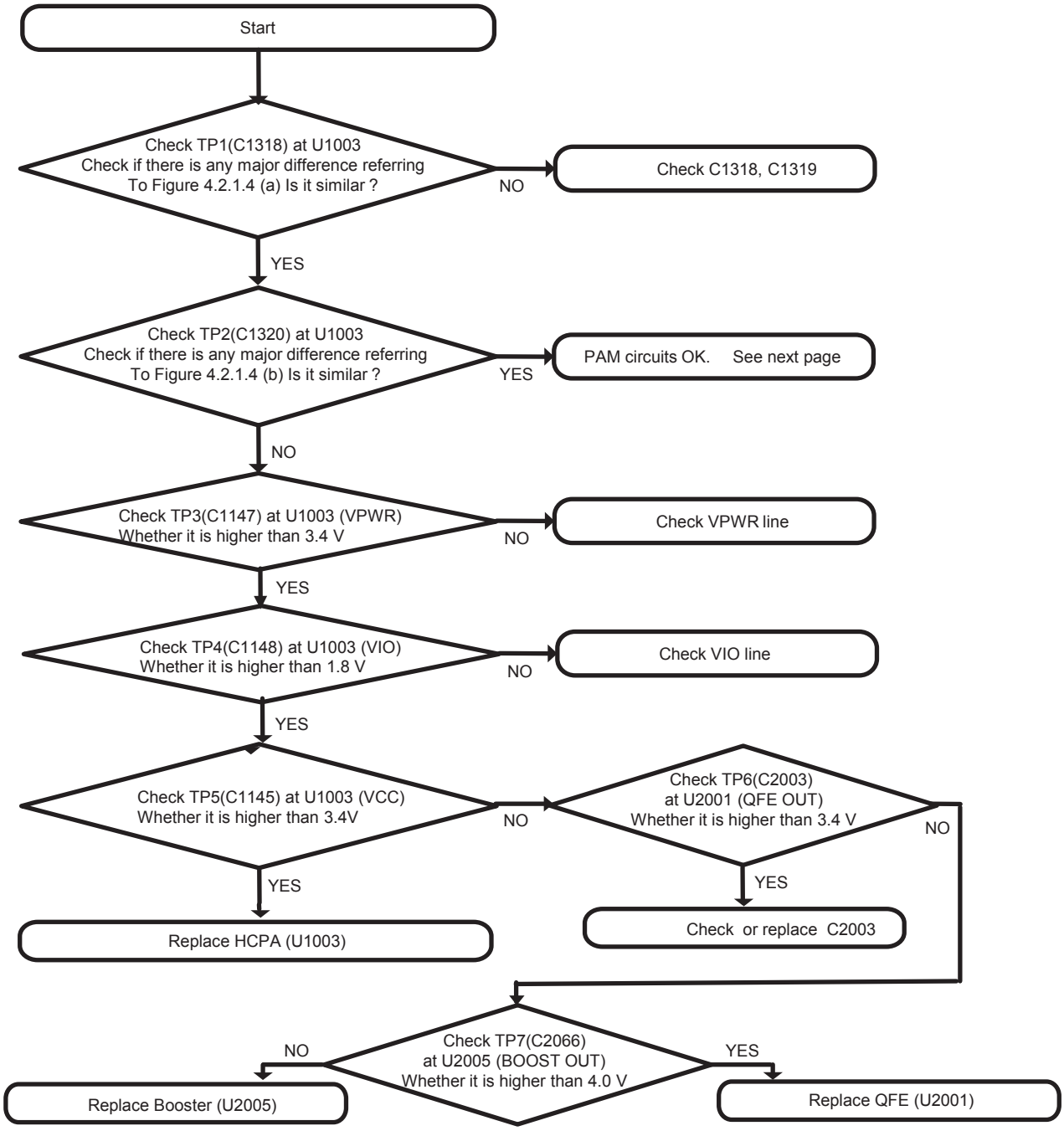

Waveform

TP1

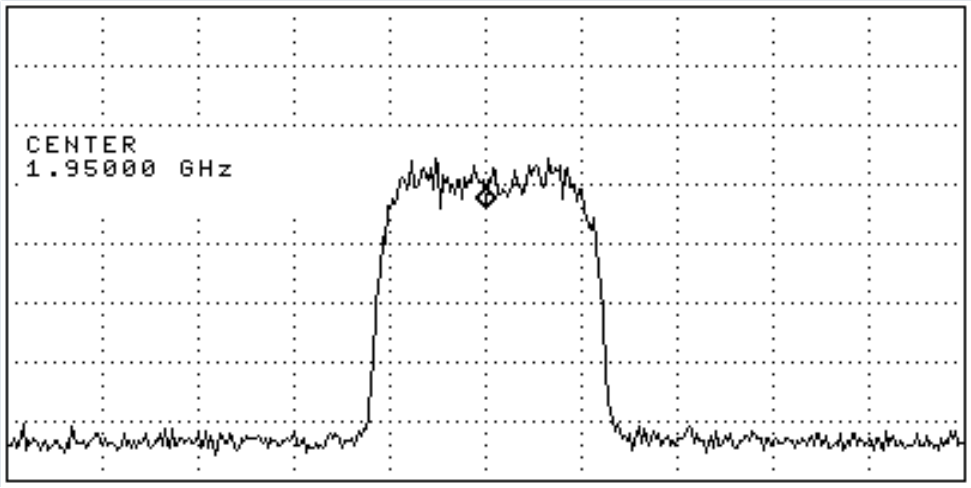

Figure 3.2.1.4(a)

TP2

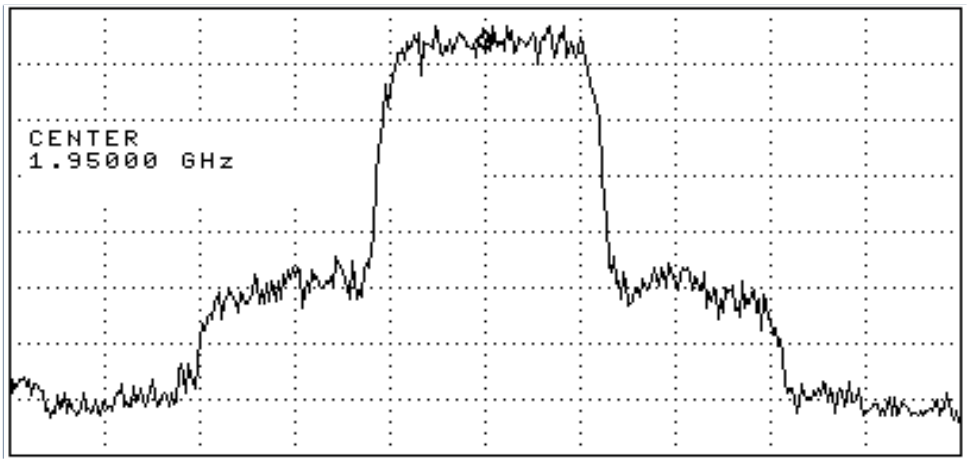

Figure 3.2.1.4(b)

3.2.1.5 Checking RF signal path (FEM)

Test Point

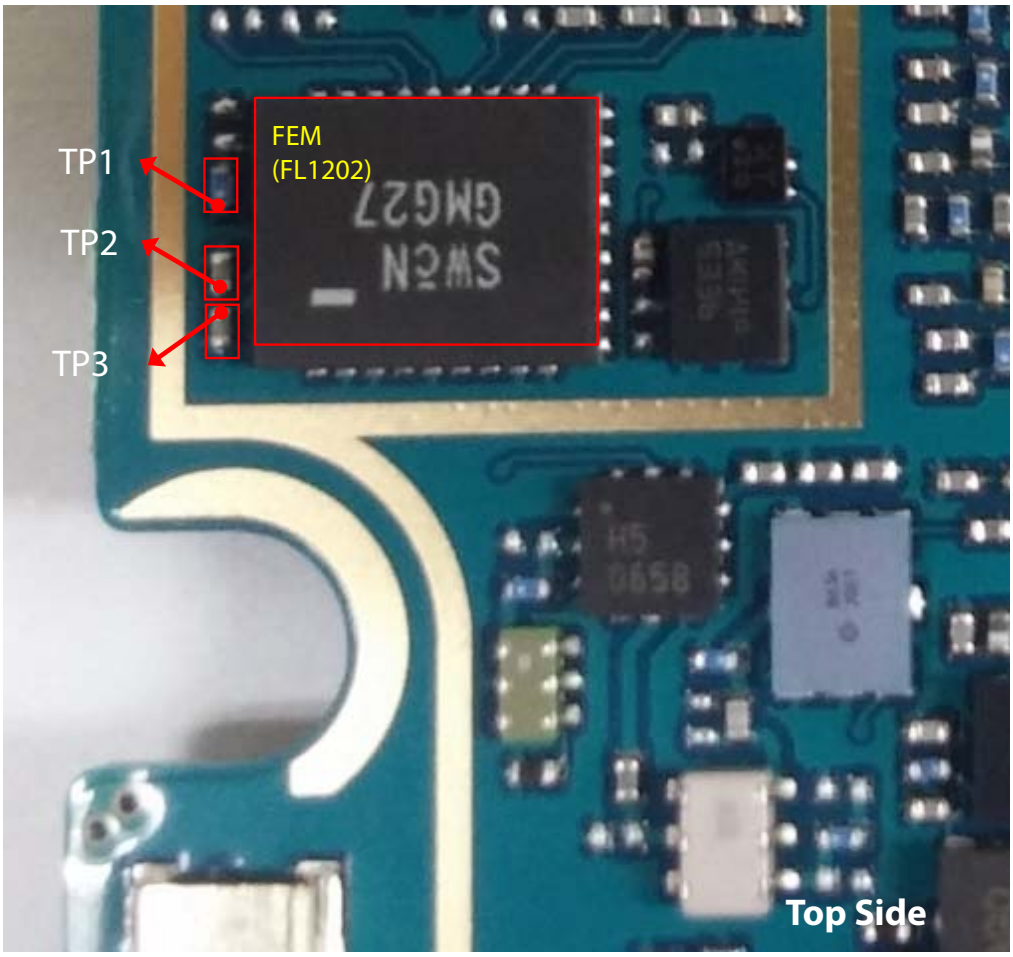

Circuit Diagram

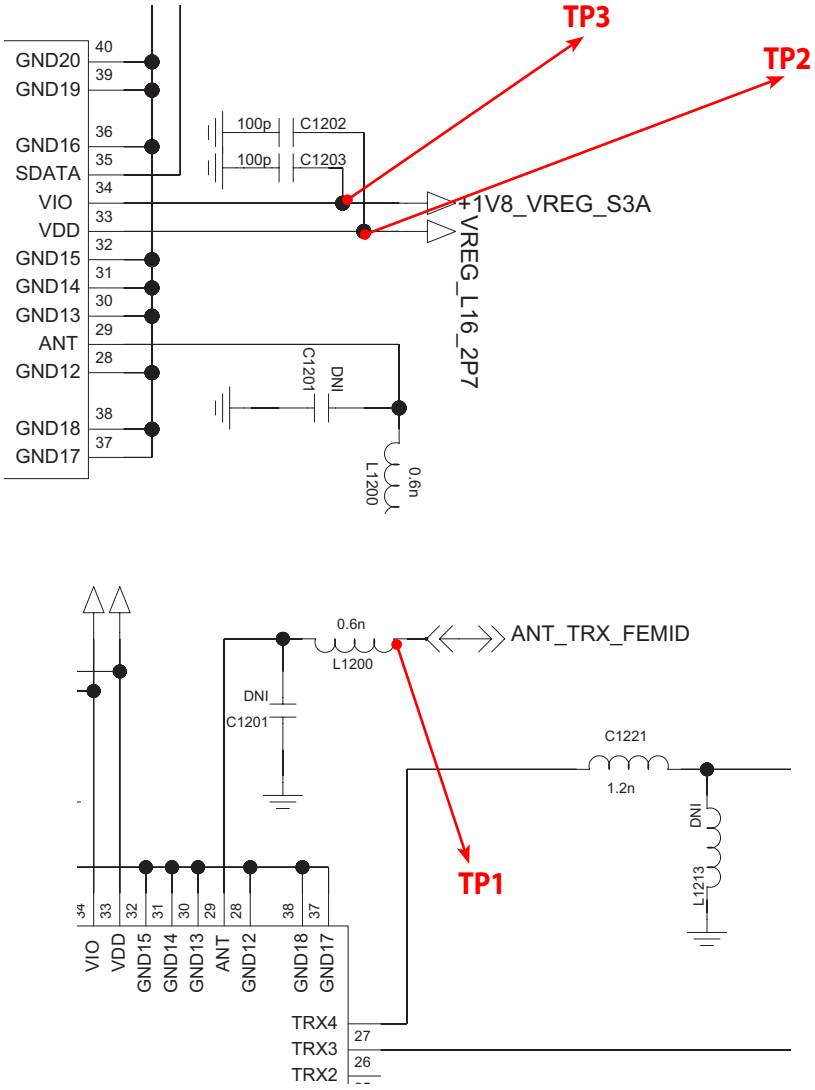

Checking Flow

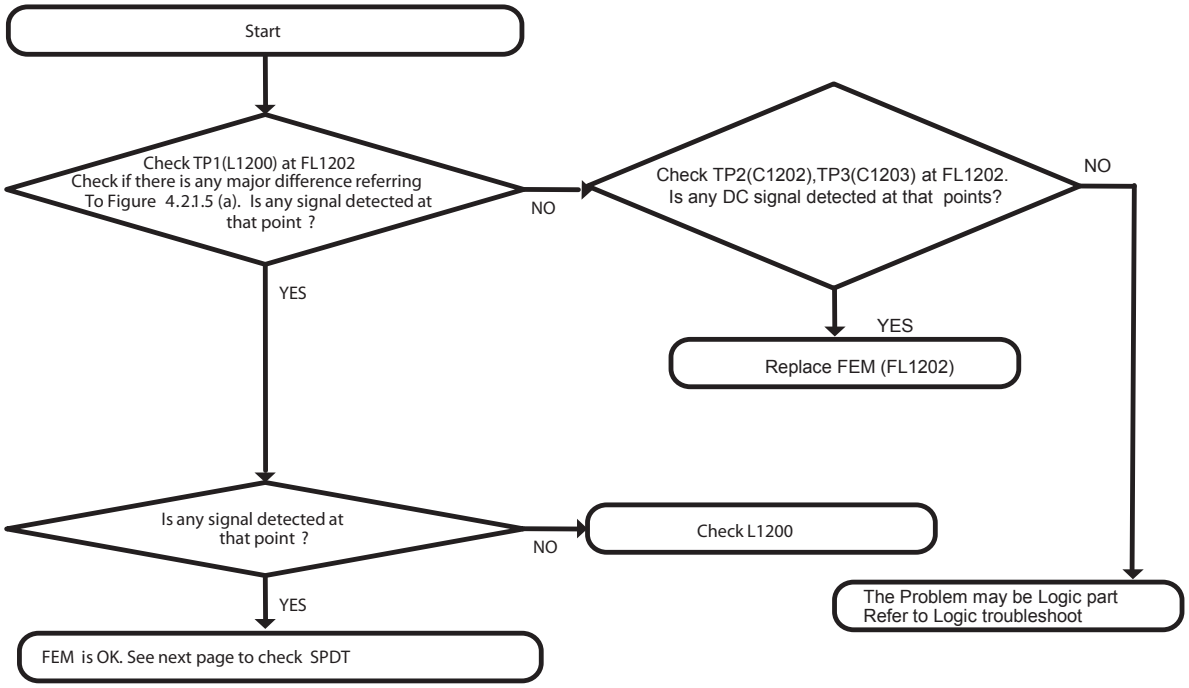

Waveform

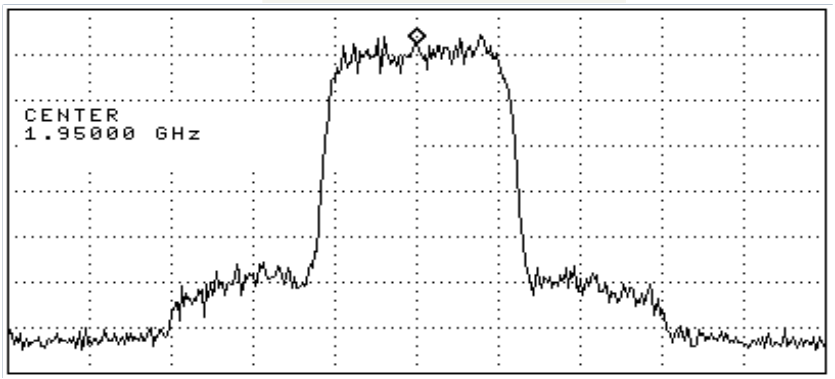

Figure 3.2.1.5(a)

3.2.1.6 Checking RF signal path (SPDT)

Test Point

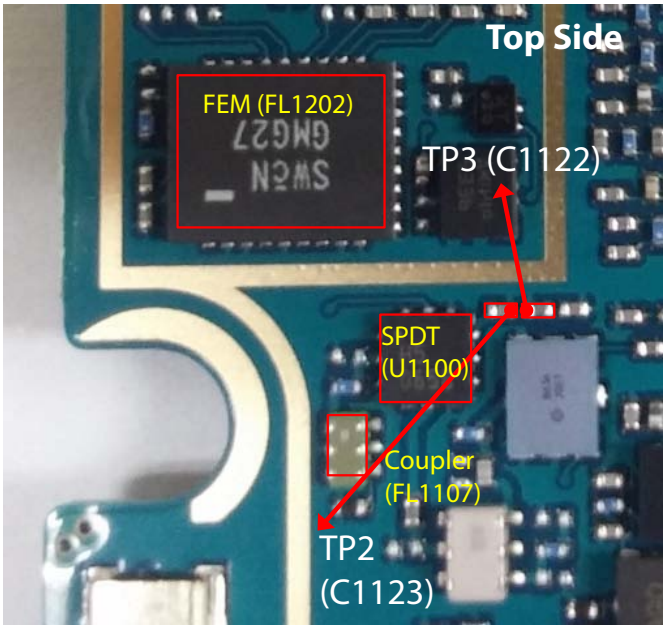

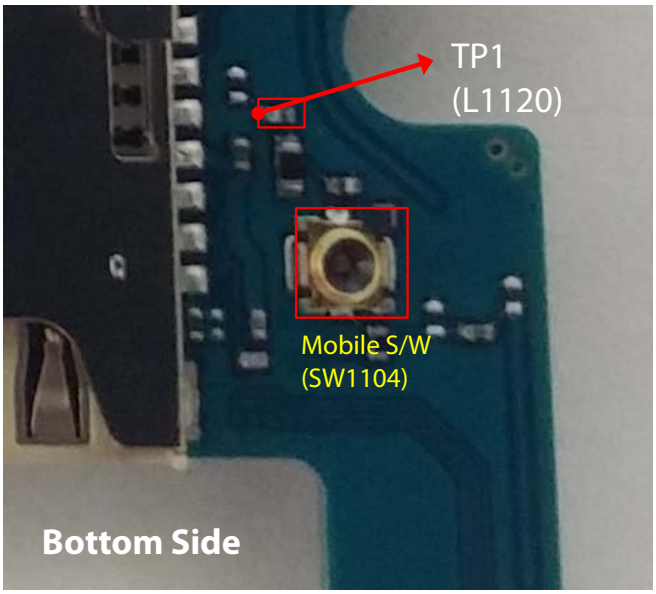

Circuit Diagram

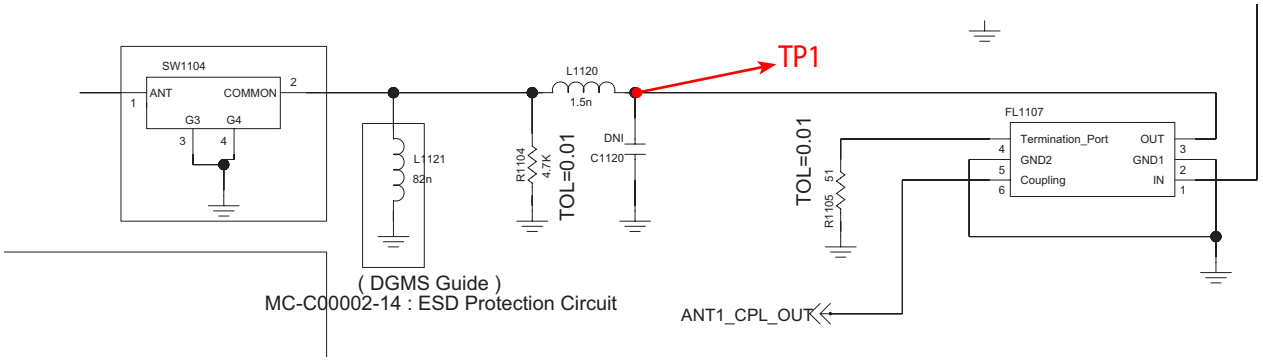

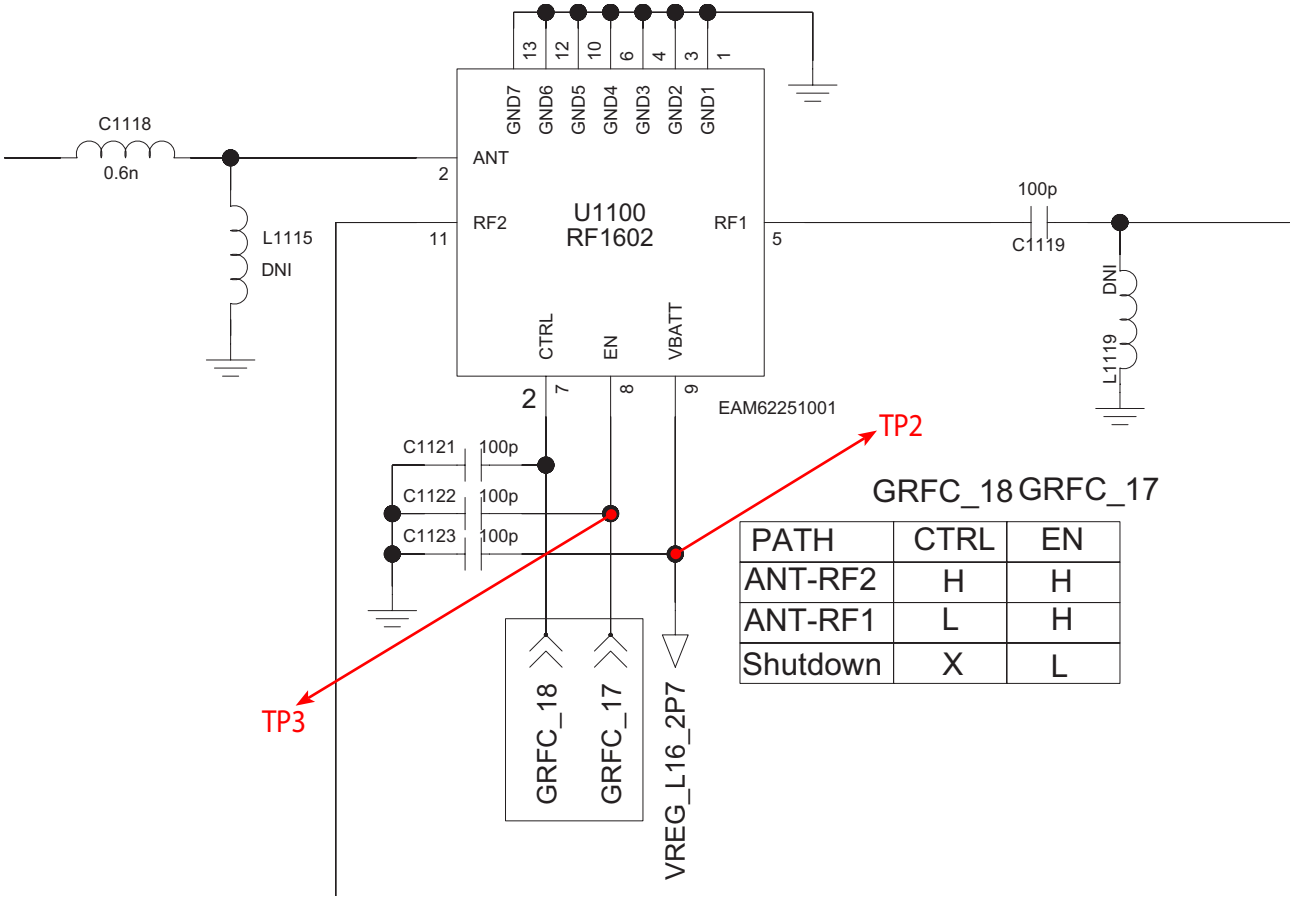

PATH	GRFC_18 CTRL	GRFC_17 EN
ANT-RF2	H	H
ANT-RF1	L	H
Shutdown	X	L

Checking Flow

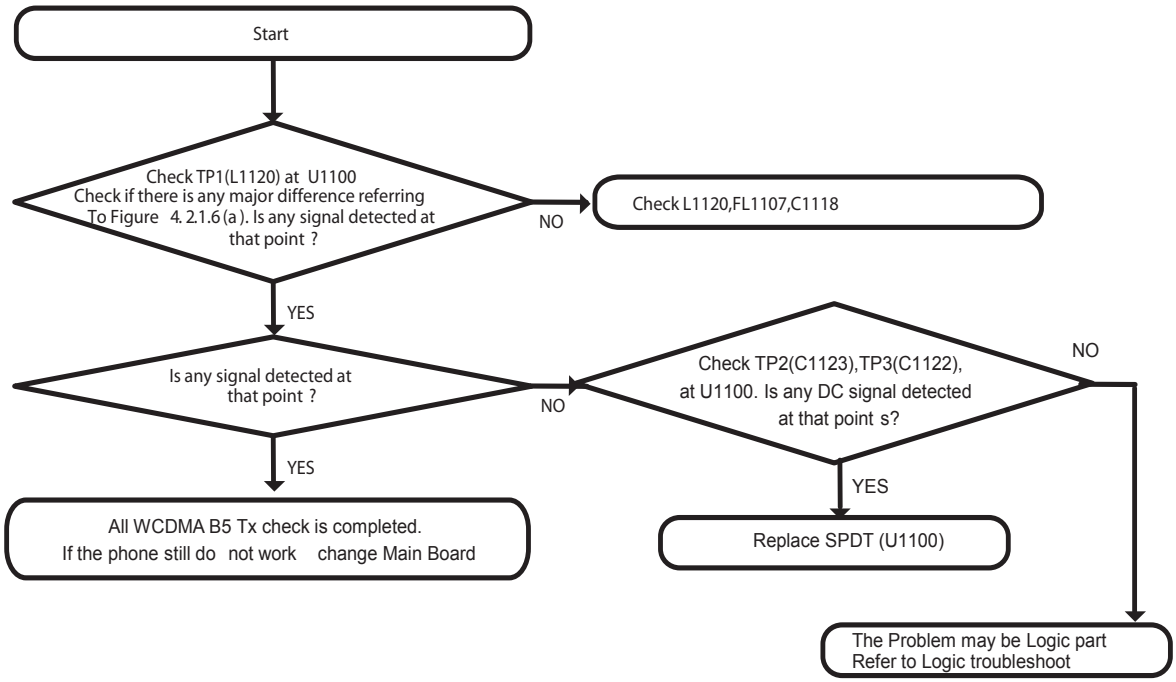

Waveform

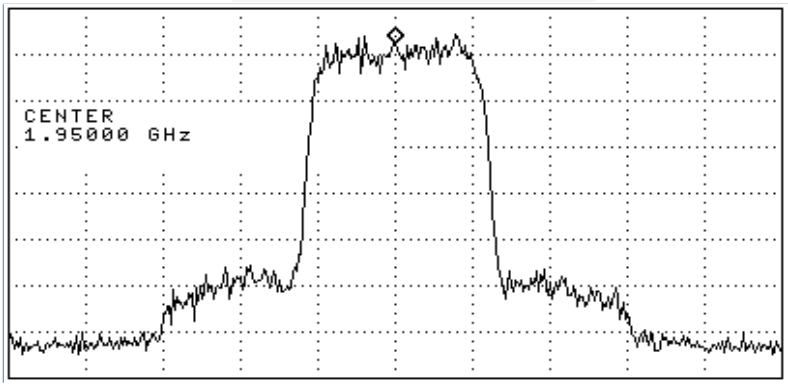

Figure 3.2.1.6(a)

3.2.1 WCDMA_B8 Tx

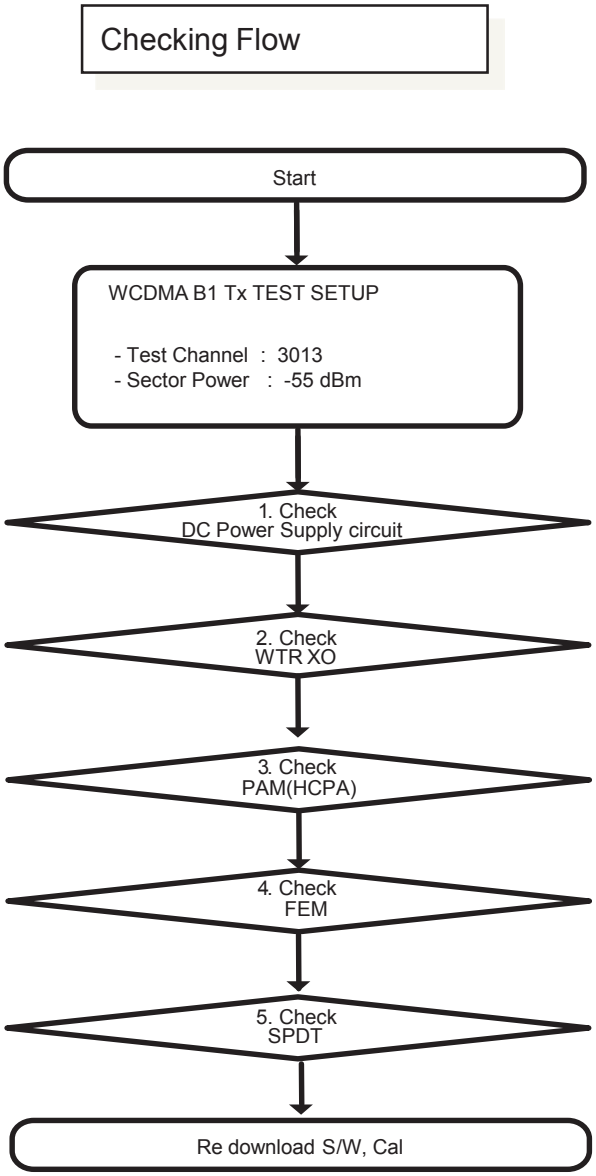

※ there are no Test Points on the IQ Data Line. So It is impossible to check the IQ Data Wave form

WCDMA B8 TX RF PATH

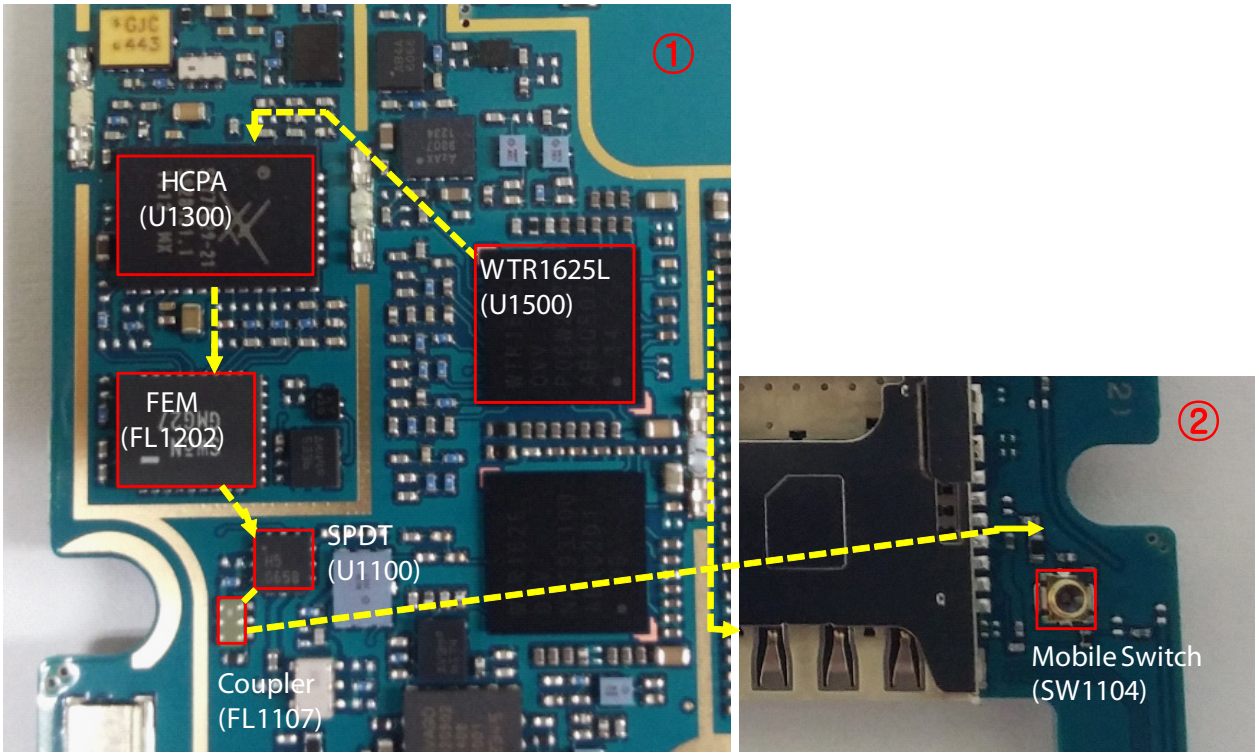

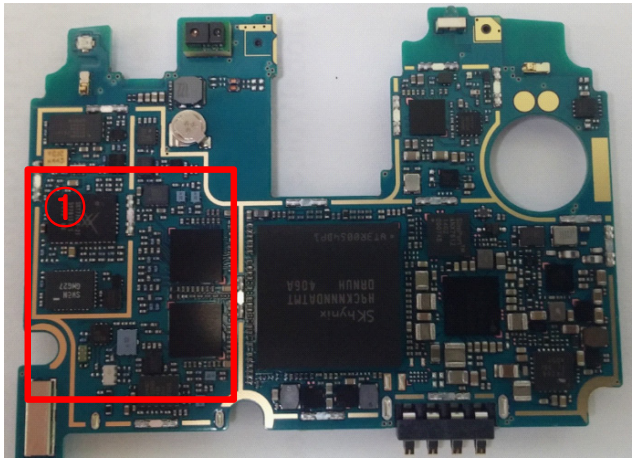

Top Side

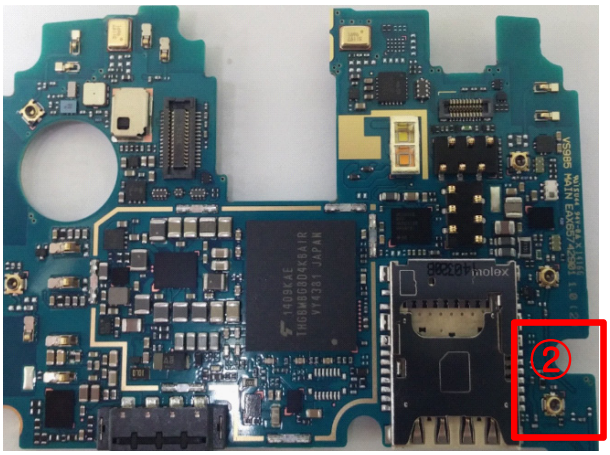

Bottom Side

3.2.1.1 Checking DC Power supply circuit (+1.3V_VREG_L4)

Test Point

TP1 : C1526
(+1.3V_VREG_L4)

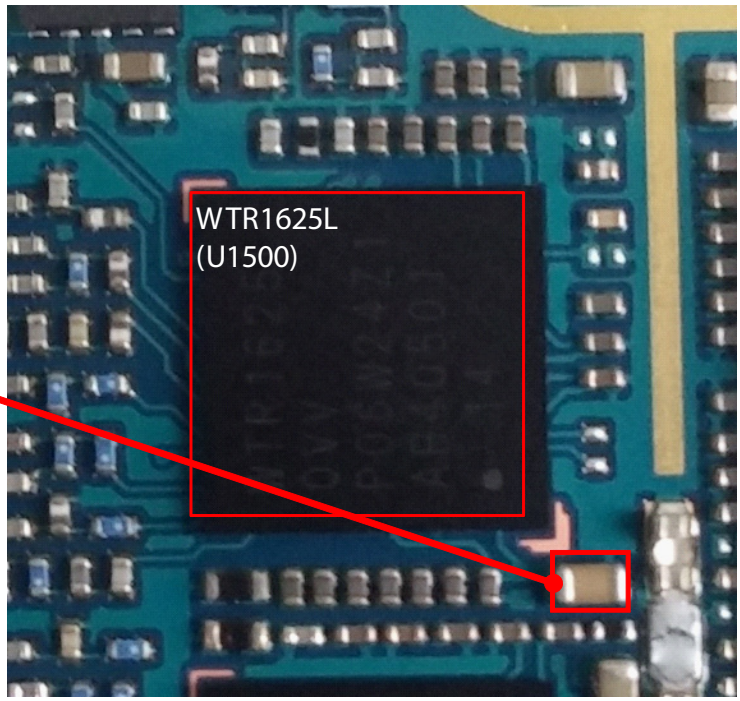

Top Side

Circuit Diagram

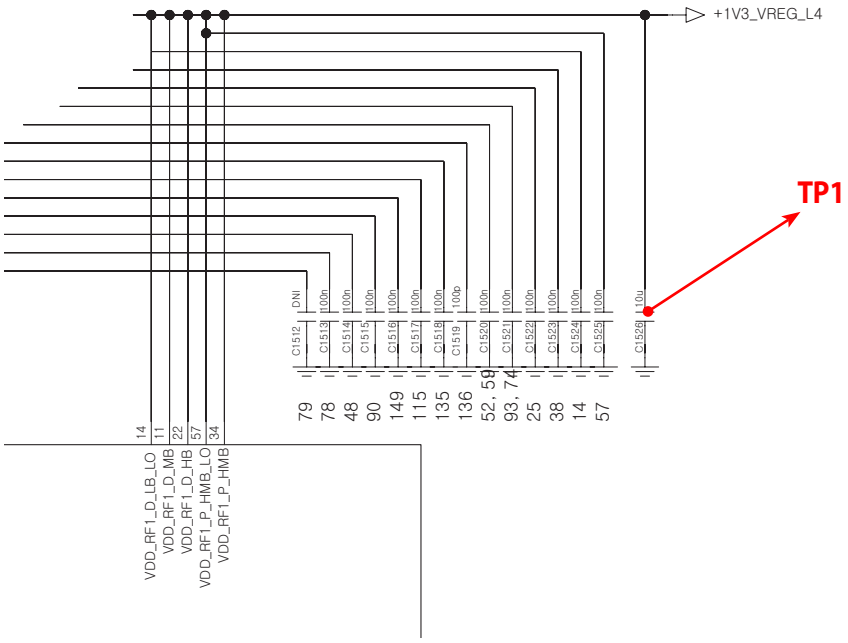

3.2.1.1 Checking DC Power supply circuit (+2.05V_VREG_L15)

Test Point

TP3 : C1503
(+2.05V_VREG_L15)

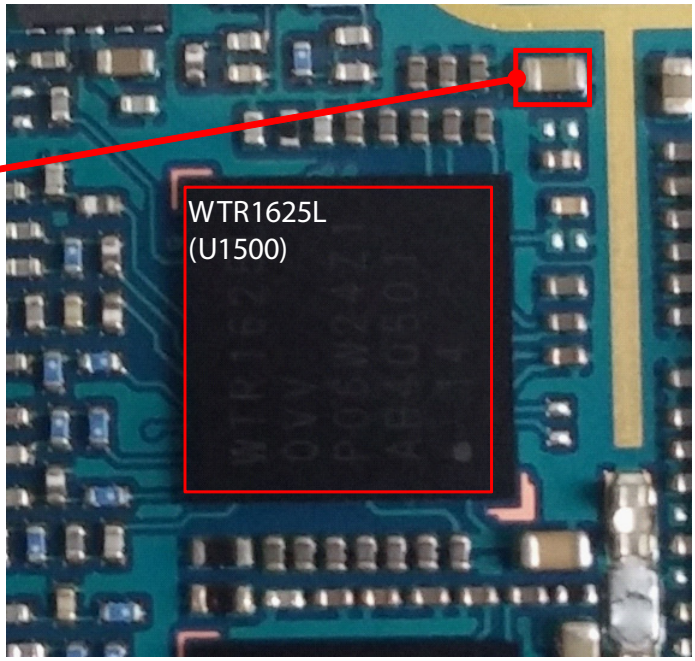

Top Side

Circuit Diagram

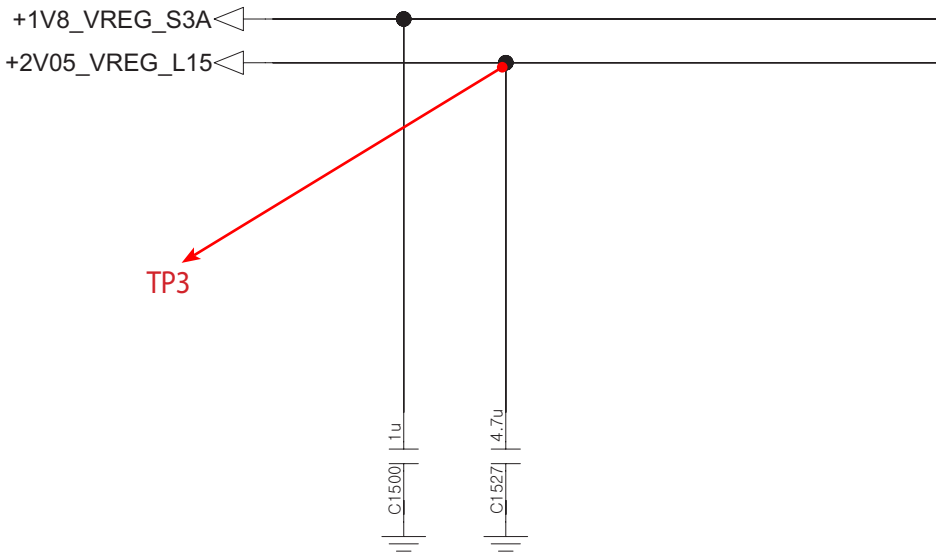

3.2.1.1 Checking DC Power supply circuit (+1.8V_VREG_S3A)

Test Point

TP2 : C1502
(+1.8V_VREG_S3A)

Top Side

Circuit Diagram

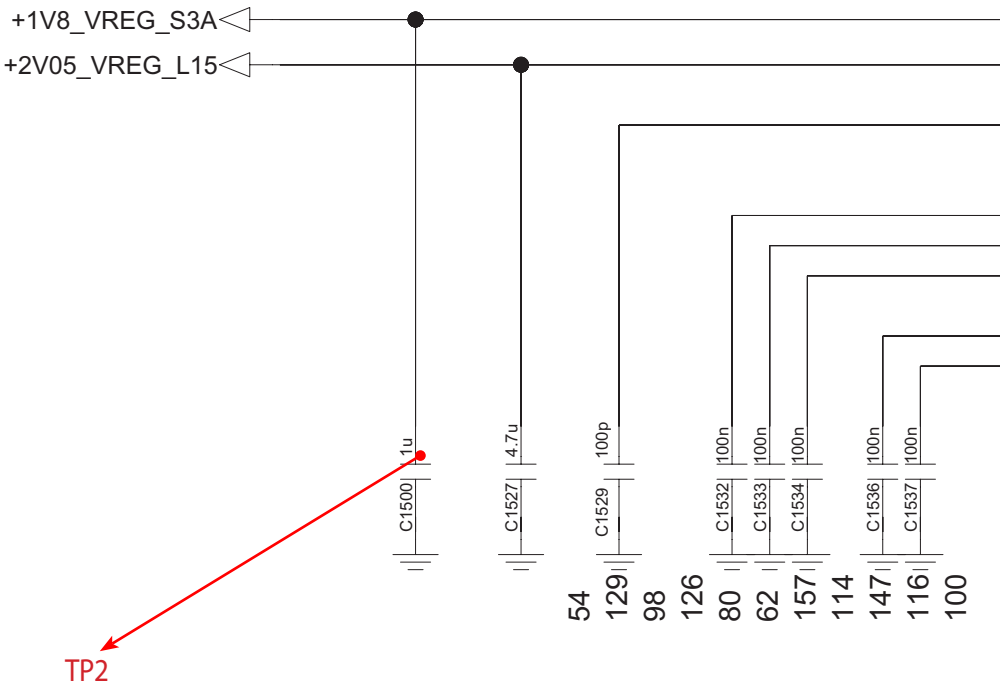

Checking Flow

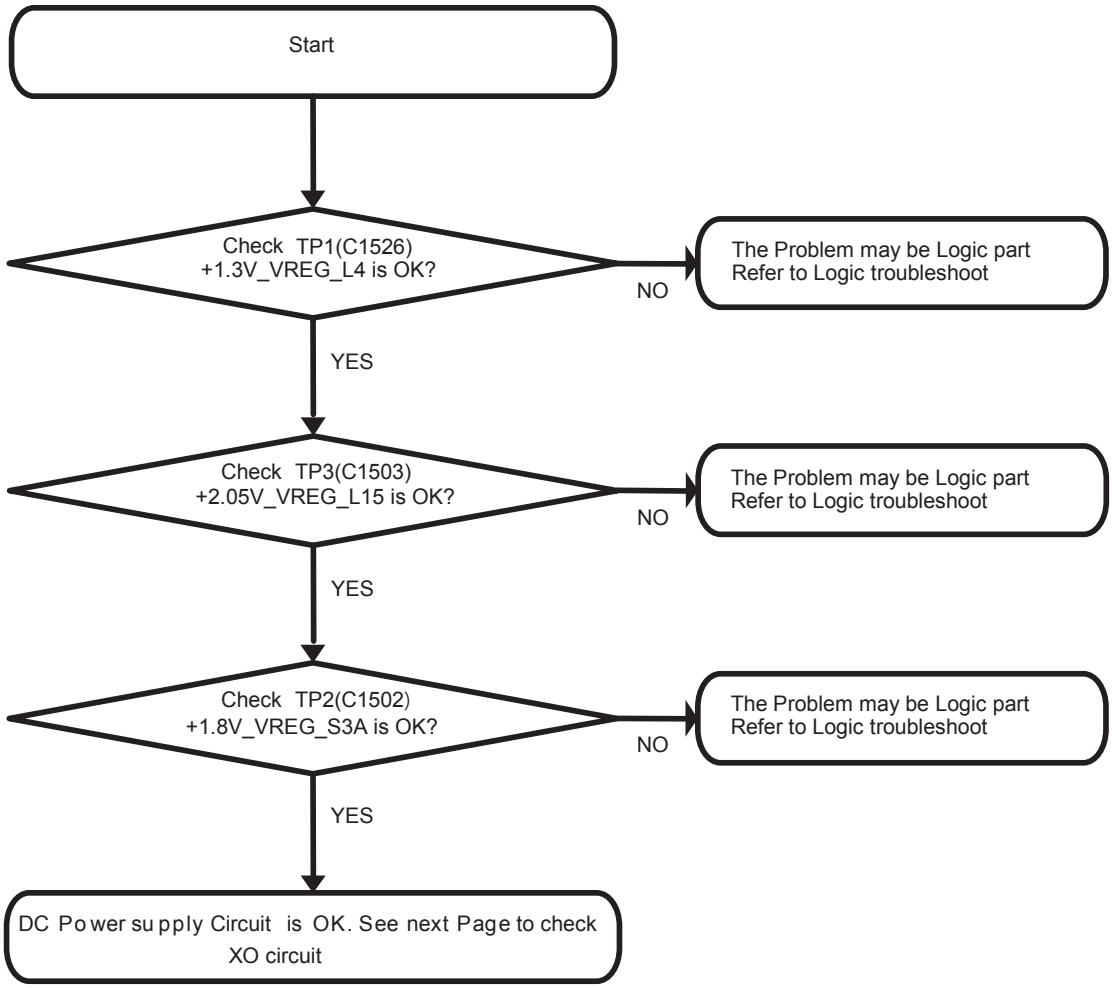

3.2.1.2 Checking WTR XO circuit

Test Point

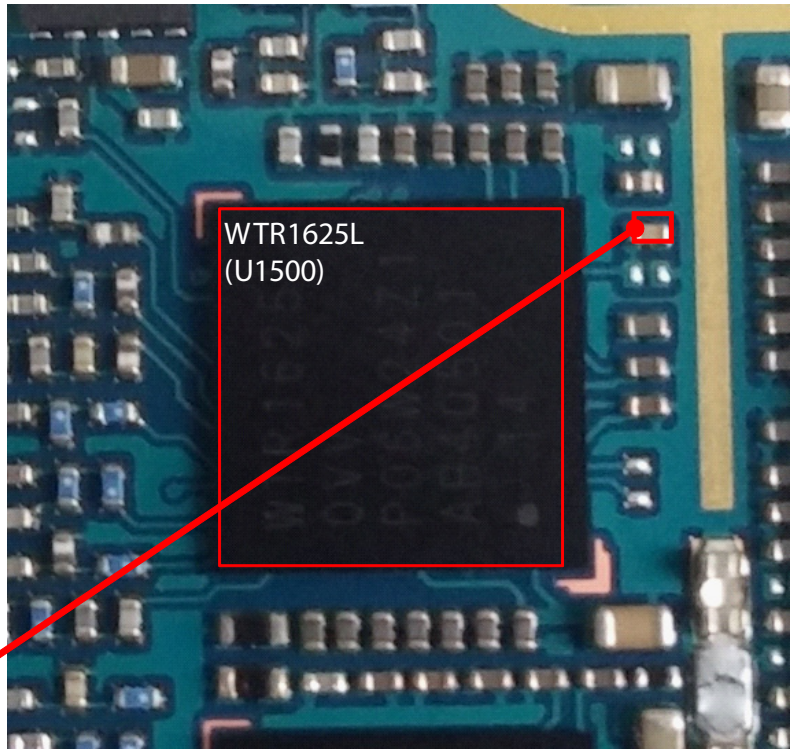

TP1 : C1561
(WTR_XO_IN)

Circuit Diagram

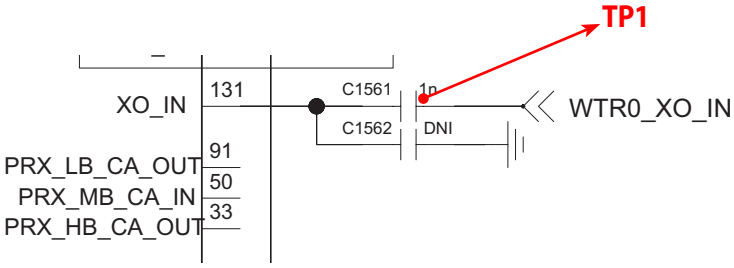

Checking Flow

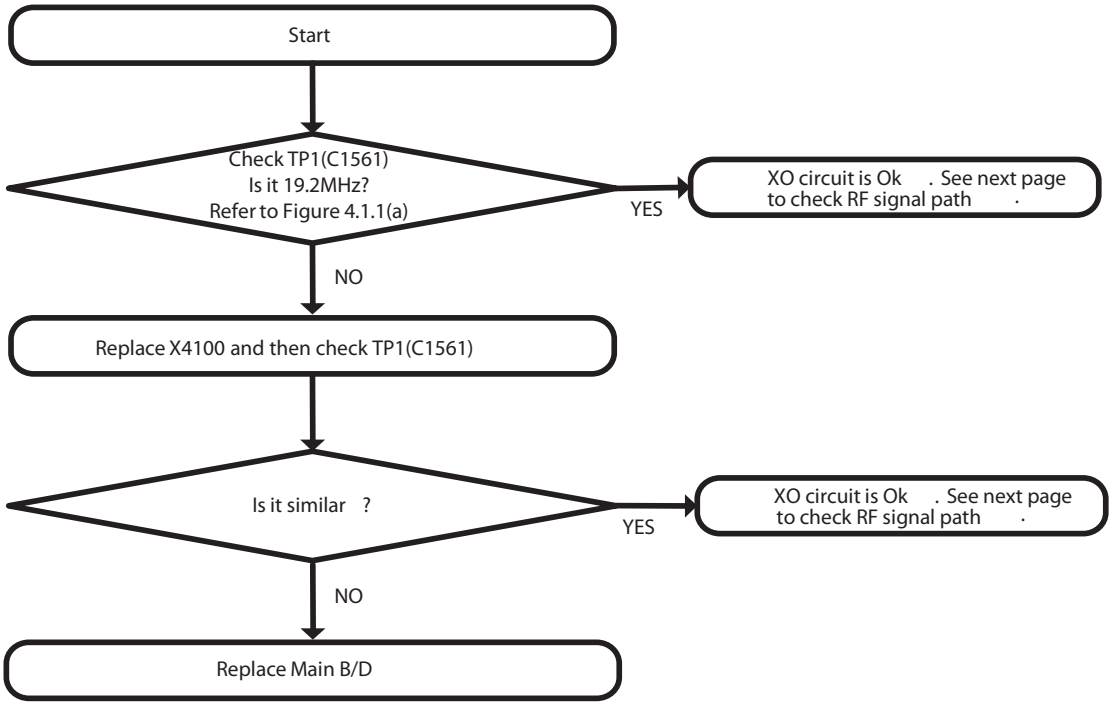

Waveform

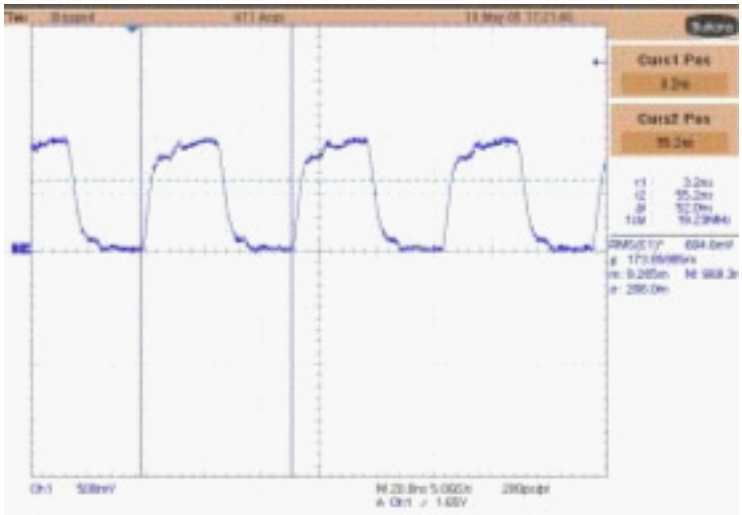

Figure 3.2.1.2(a)

3.2.1.3 Checking WTR TX OUT circuit

Test Point

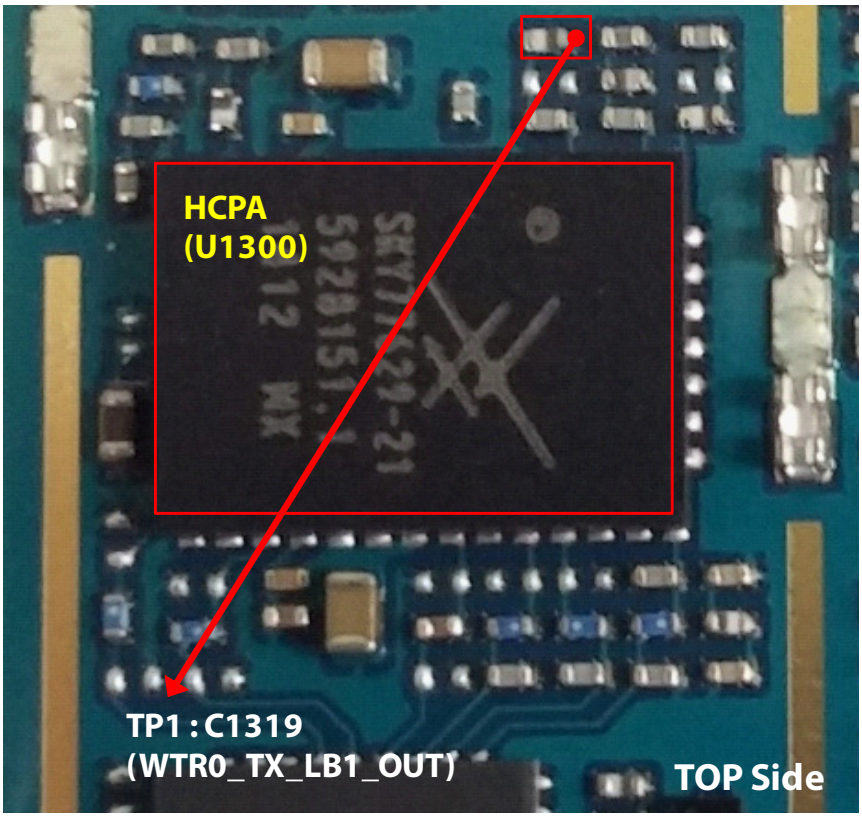

Circuit Diagram

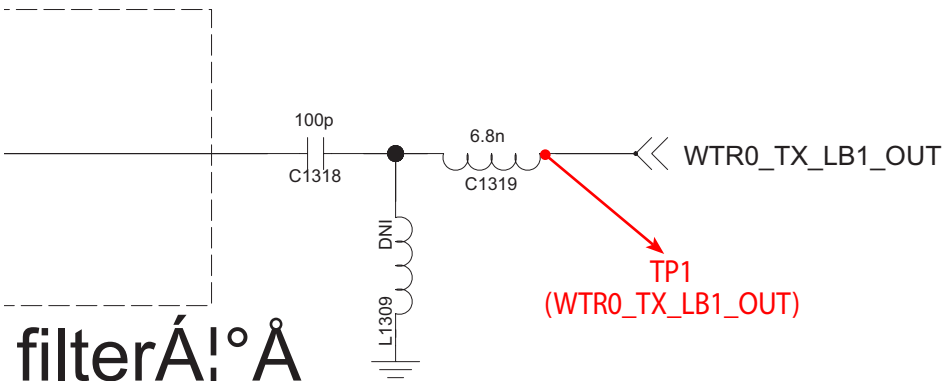

Checking Flow

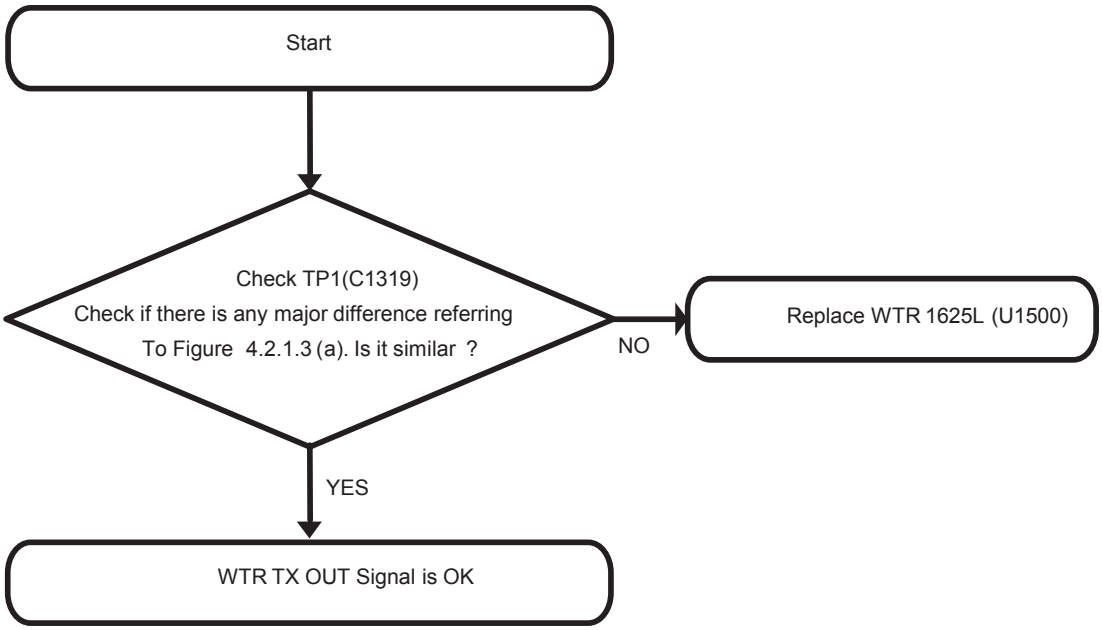

Waveform

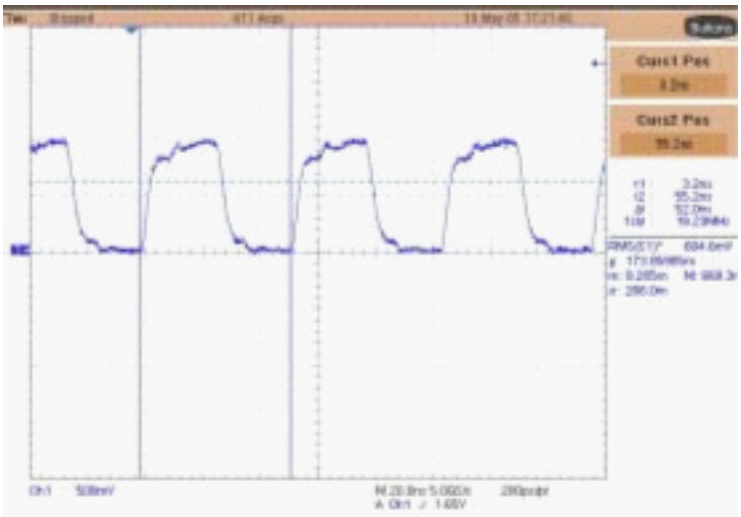

Figure 3.2.1.3(a)

3.2.1.4 Check WCDMA B8 HCPA circuit

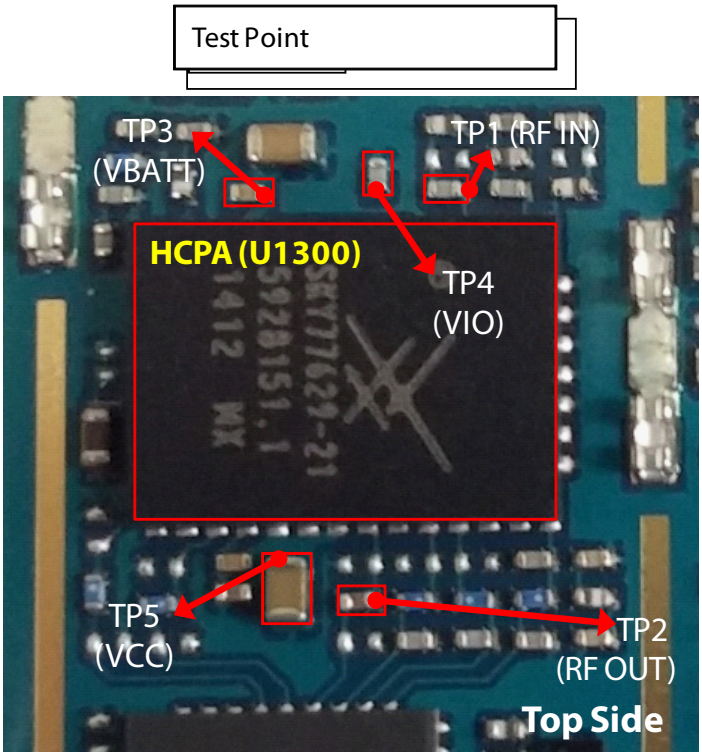

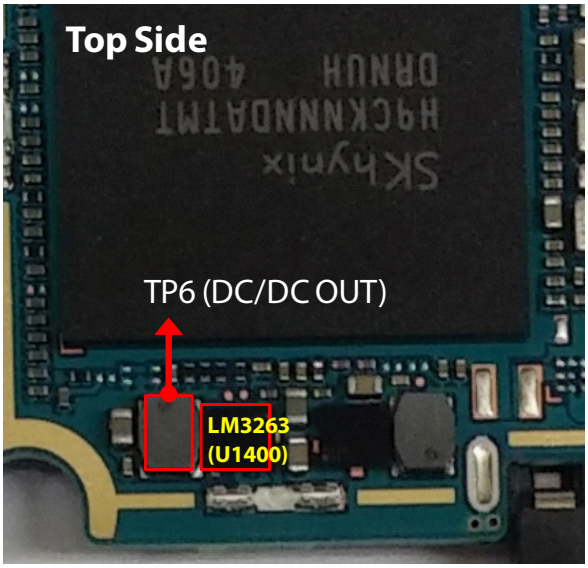

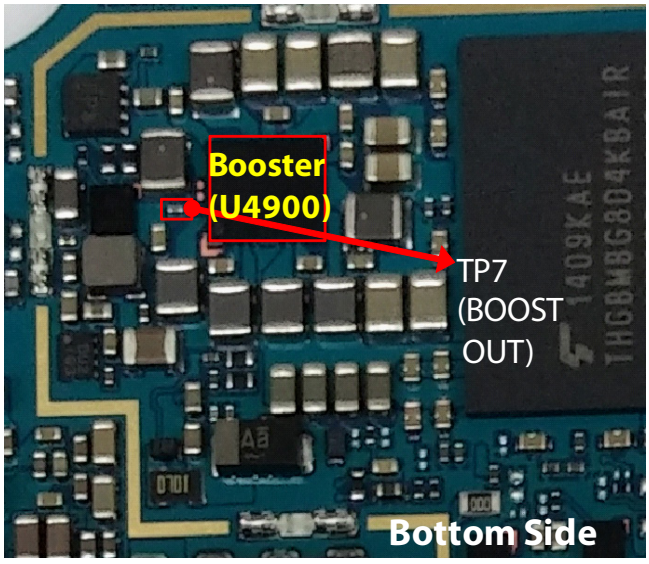

Circuit Diagram

HCPA_APT_SKY77629

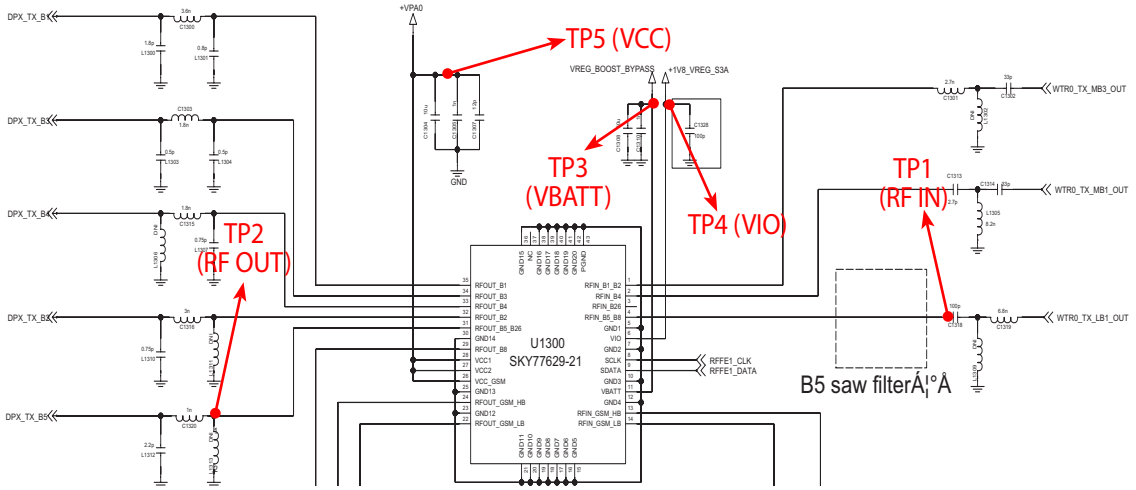

Global_LTE_APT_LM3263

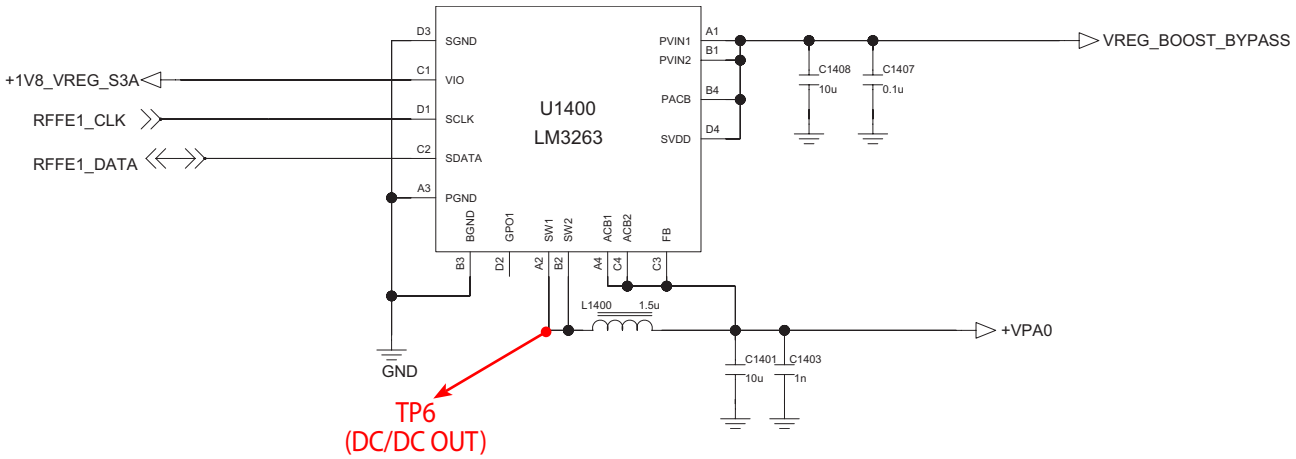

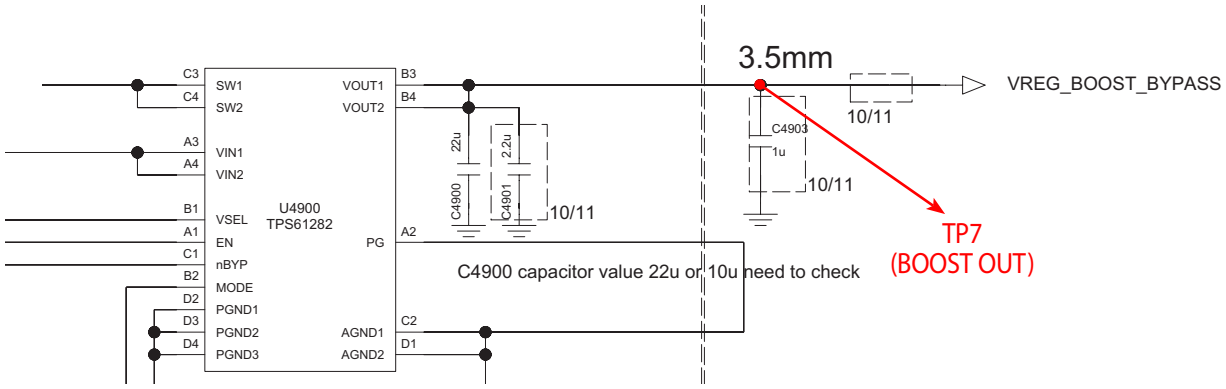

Checking Flow

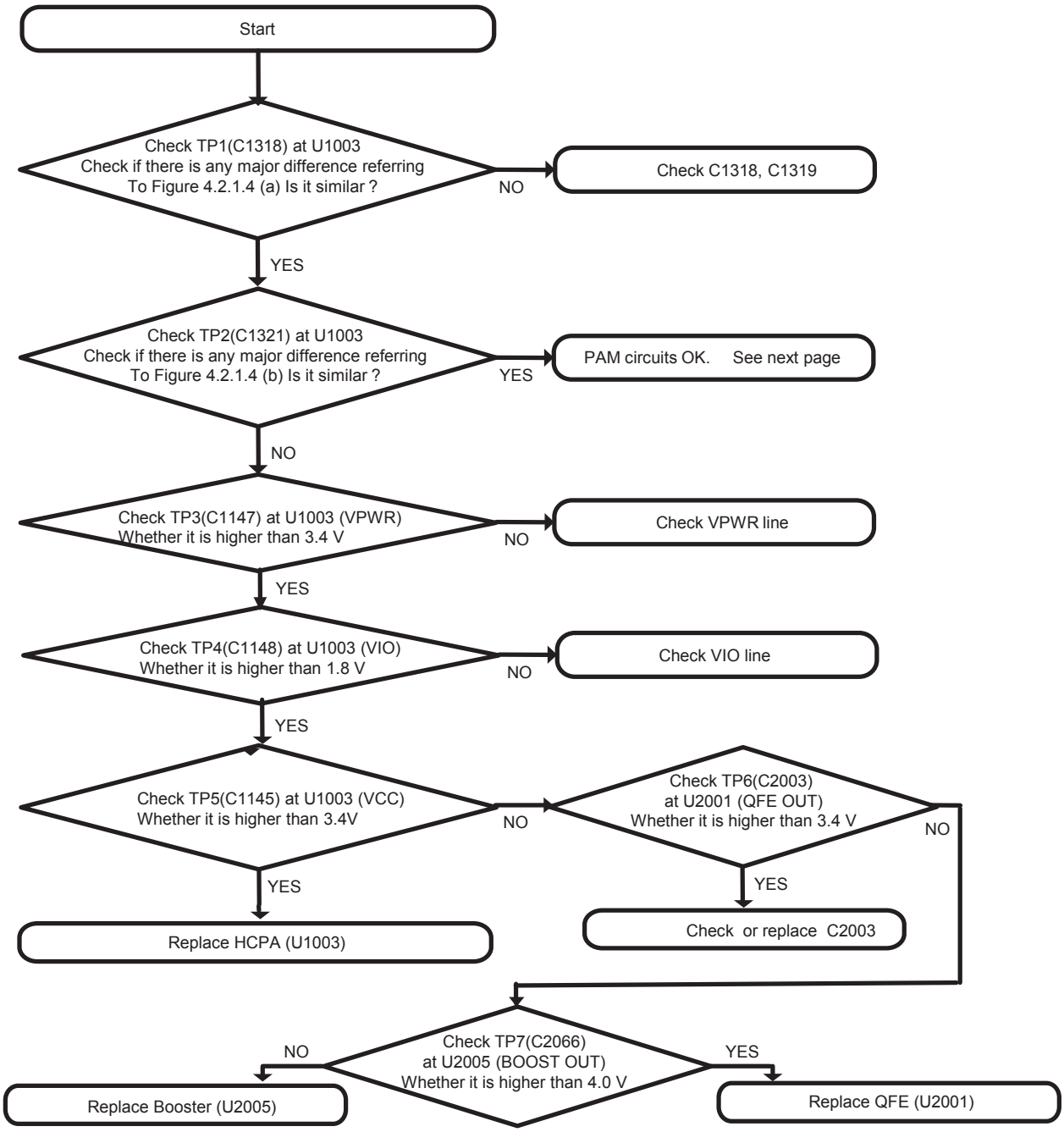

Waveform

TP1

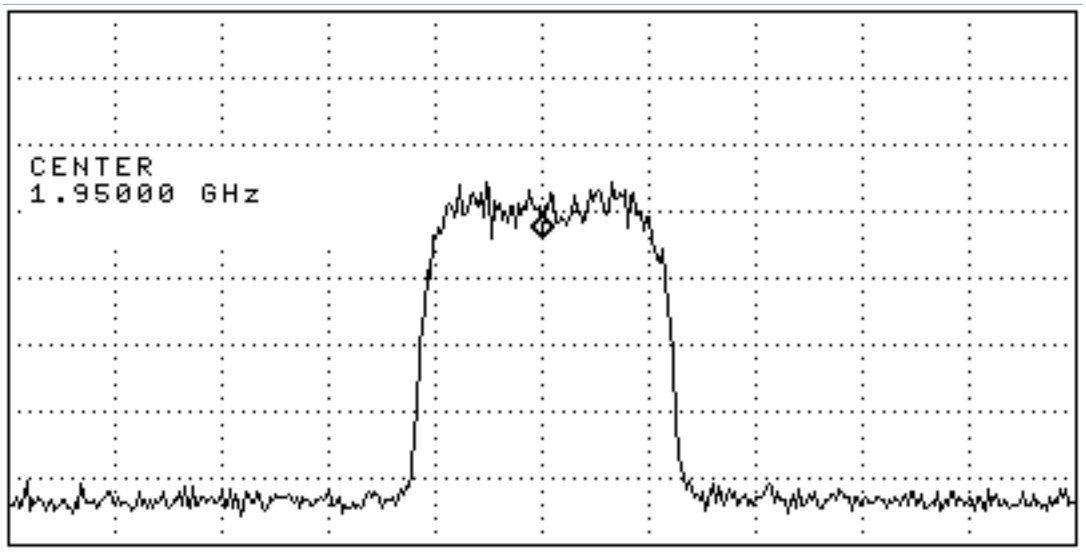

Figure 3.2.1.4(a)

TP2

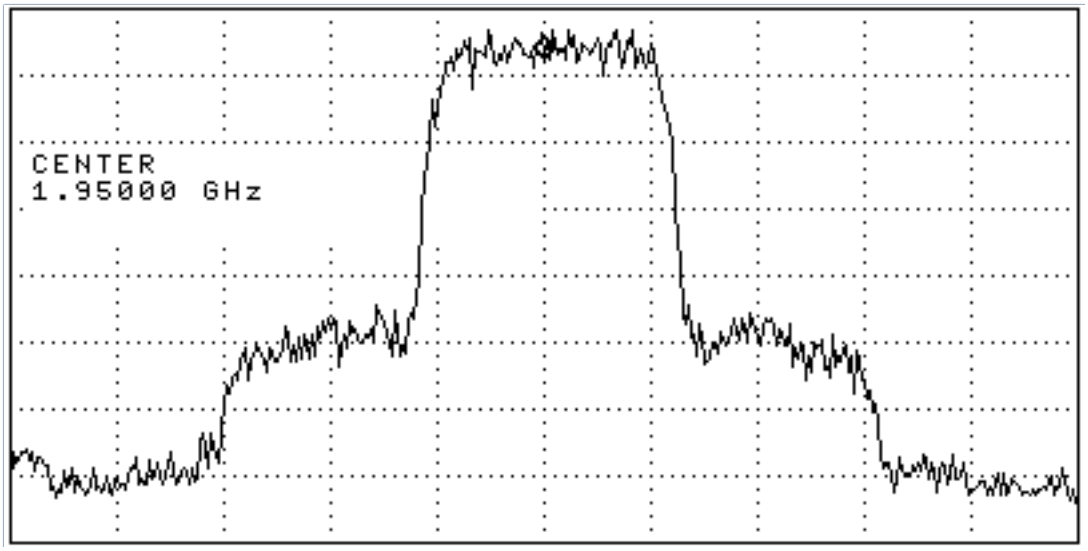

Figure 3.2.1.4(b)

3.2.1.5 Checking RF signal path (FEM)

Test Point

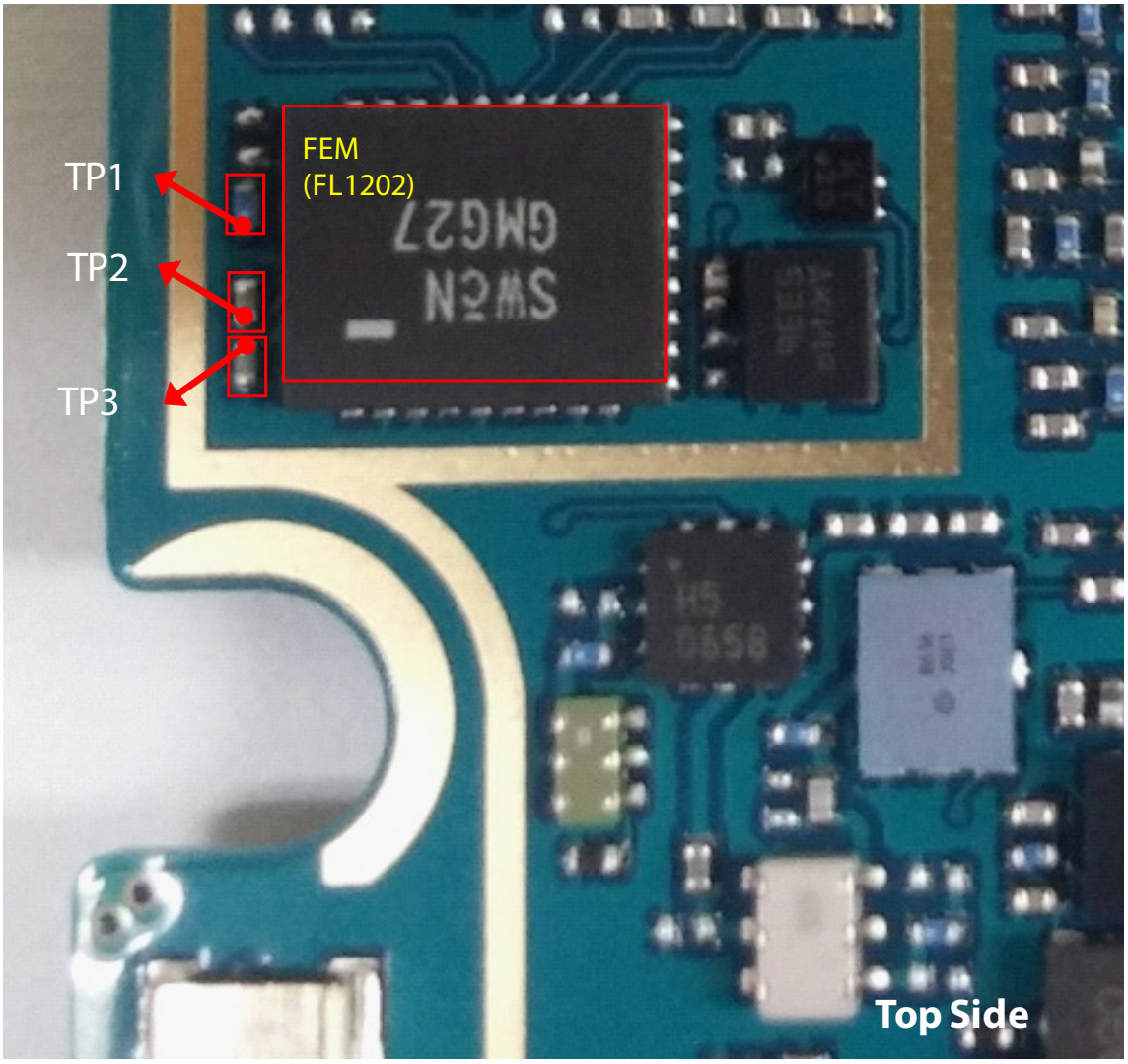

Circuit Diagram

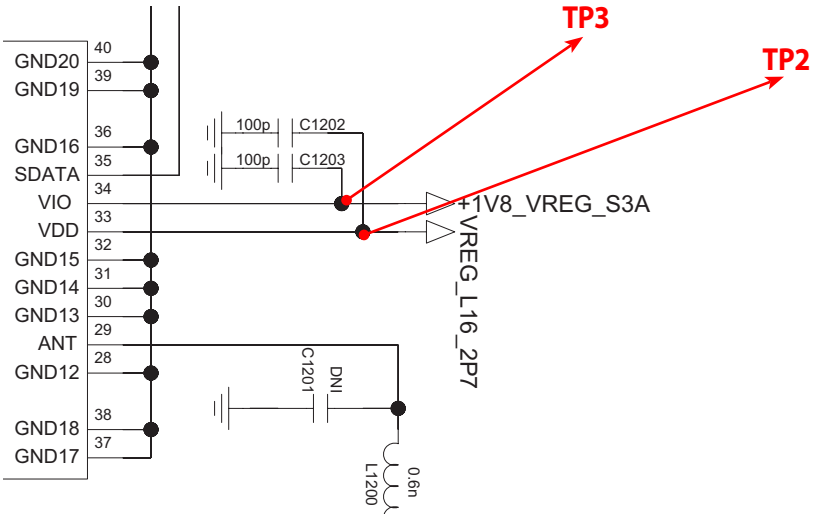

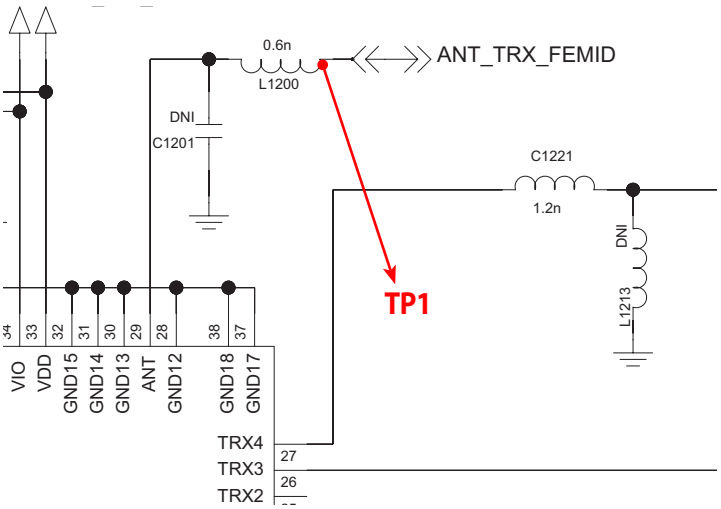

Checking Flow

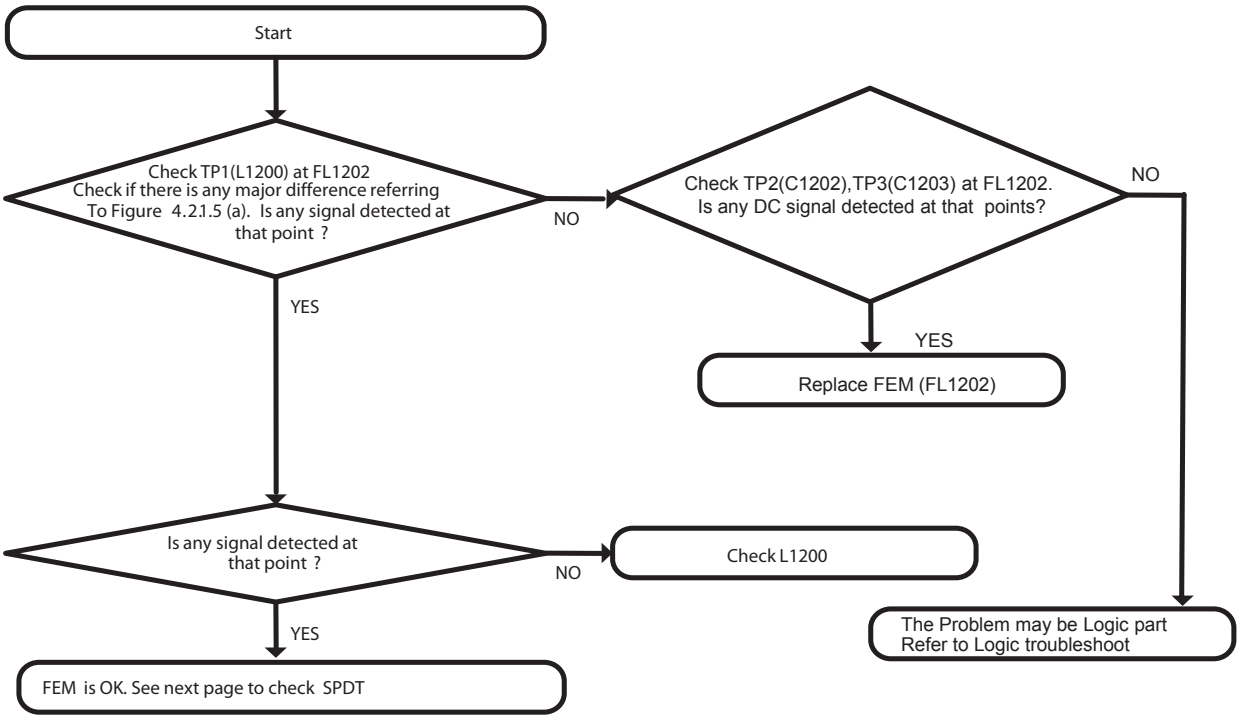

Waveform

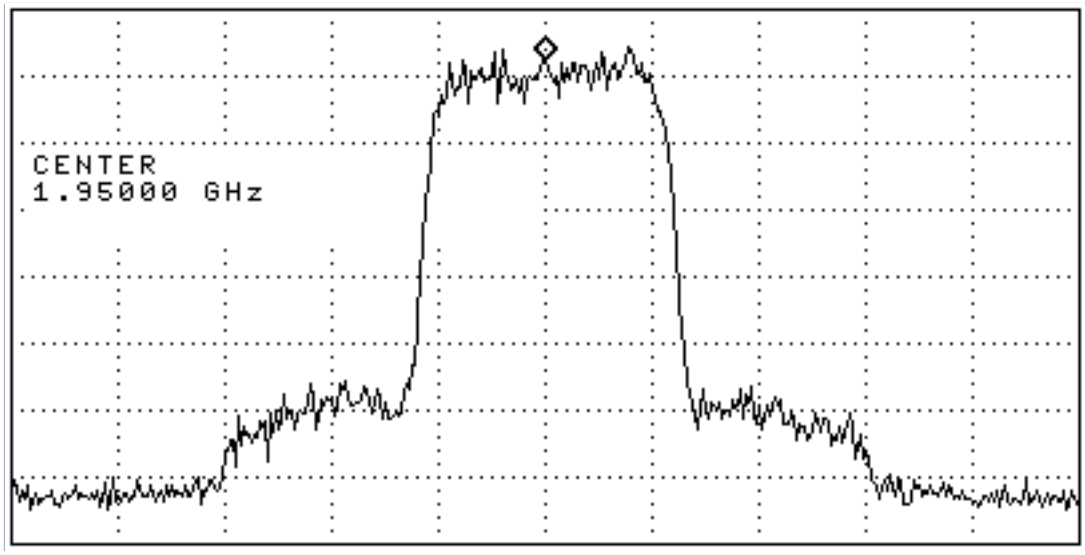

Figure 3.2.1.5(a)

3.2.1.6 Checking RF signal path (SPDT)

Test Point

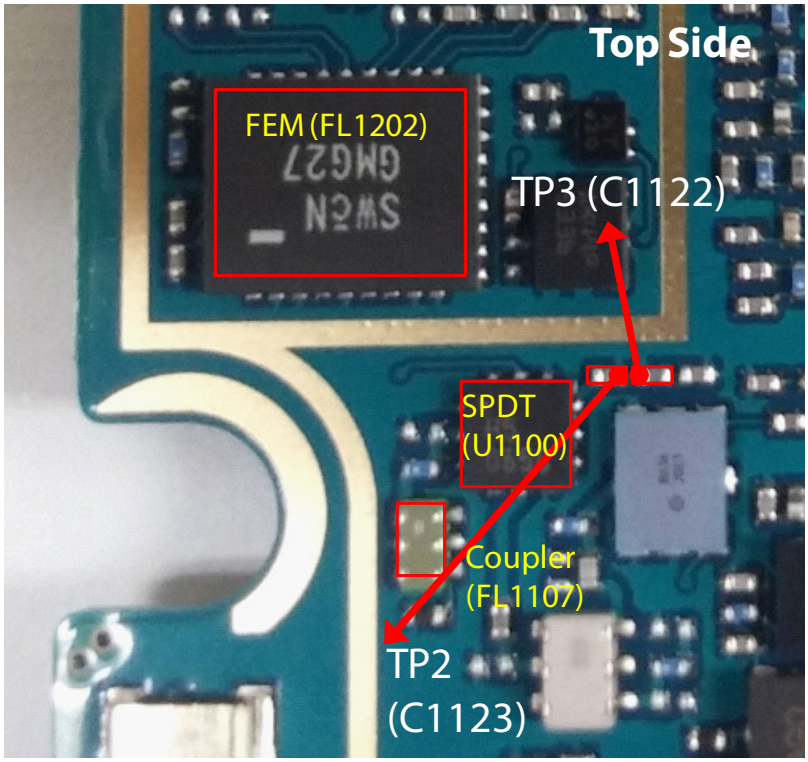

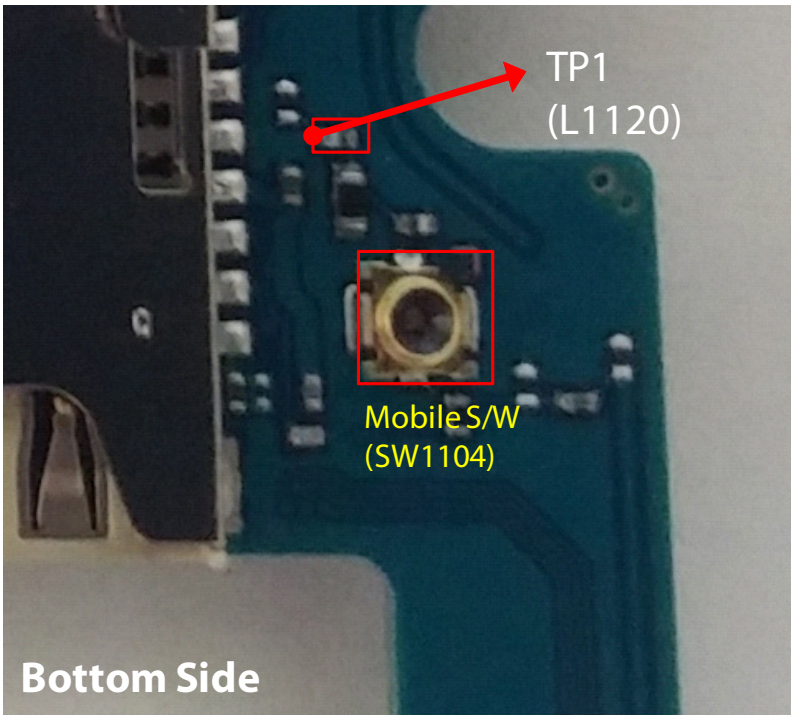

Circuit Diagram

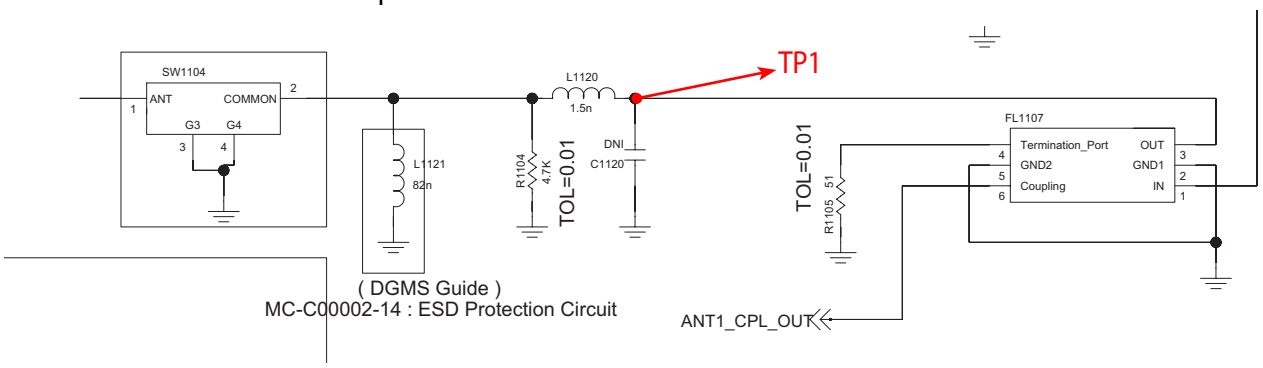

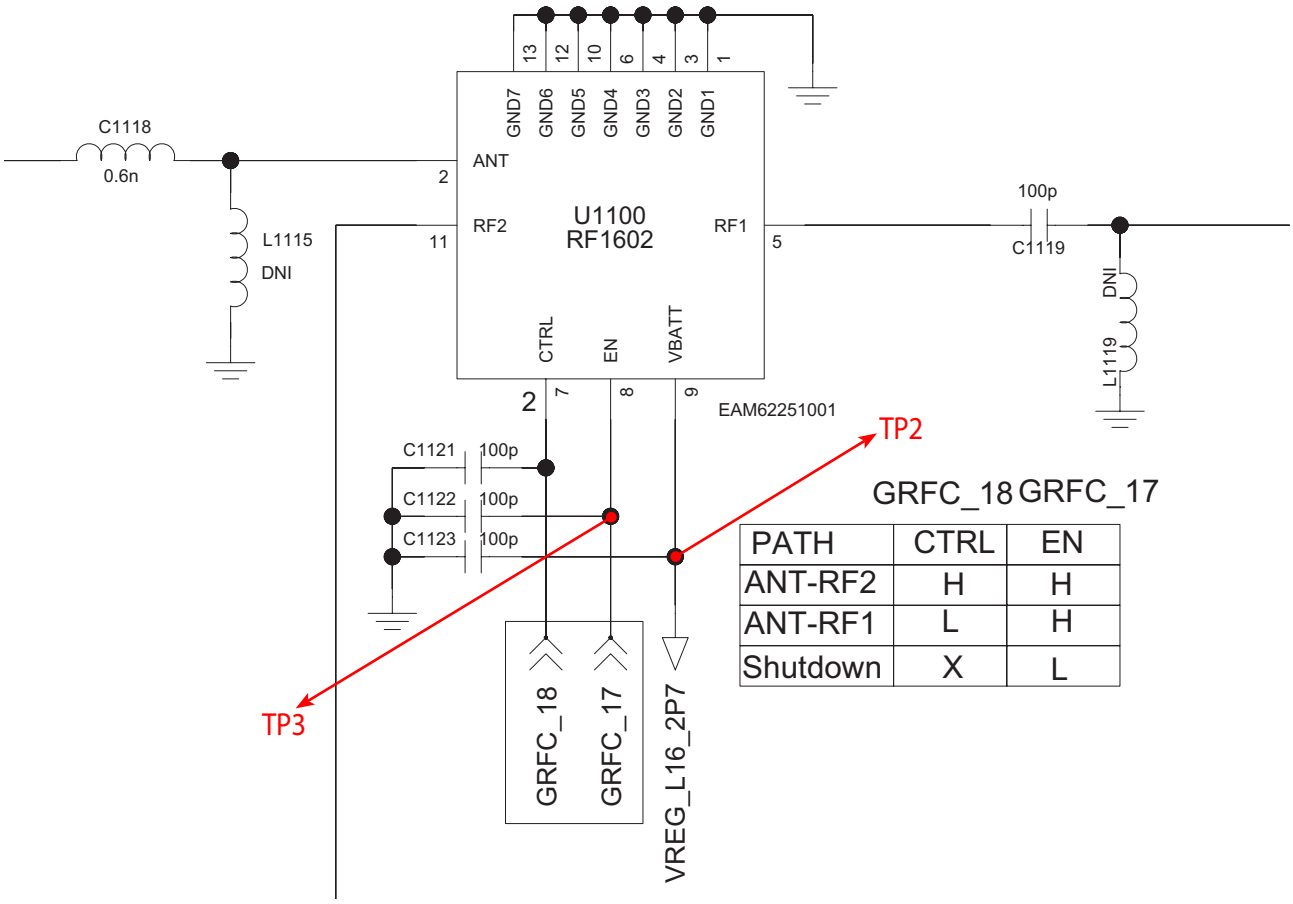

GRFC_18 GRFC_17

PATH	CTRL	EN
ANT-RF2	H	H
ANT-RF1	L	H
Shutdown	X	L

Checking Flow

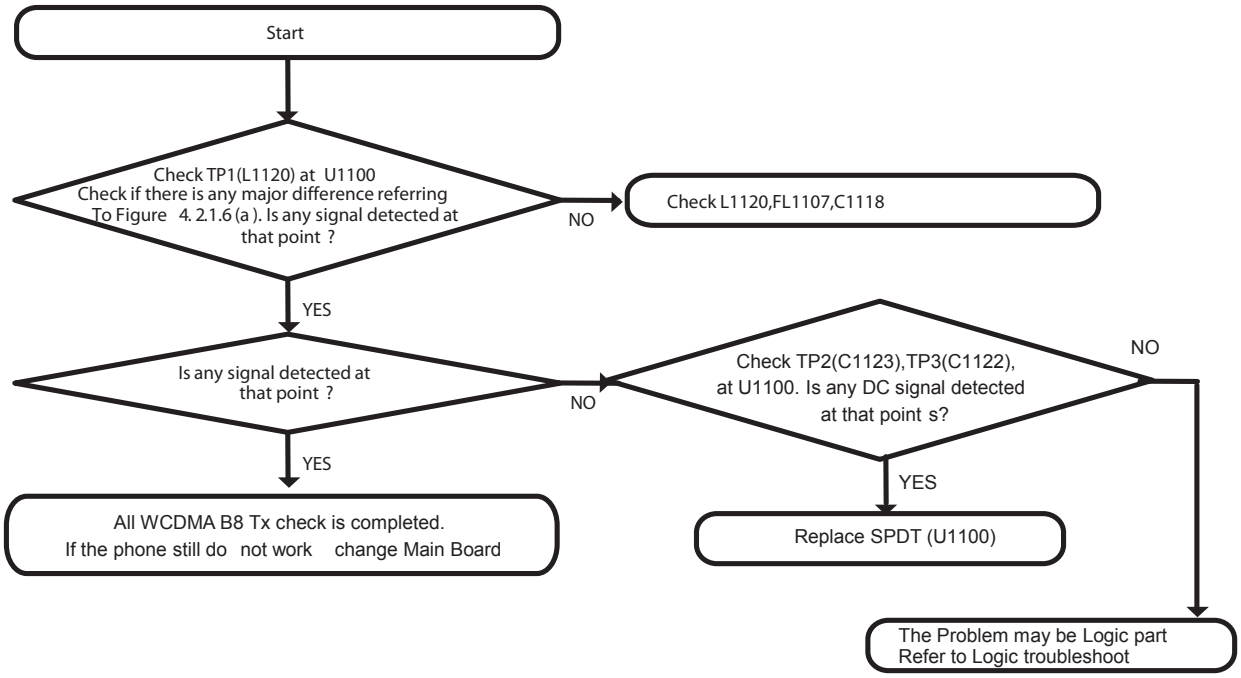

Waveform

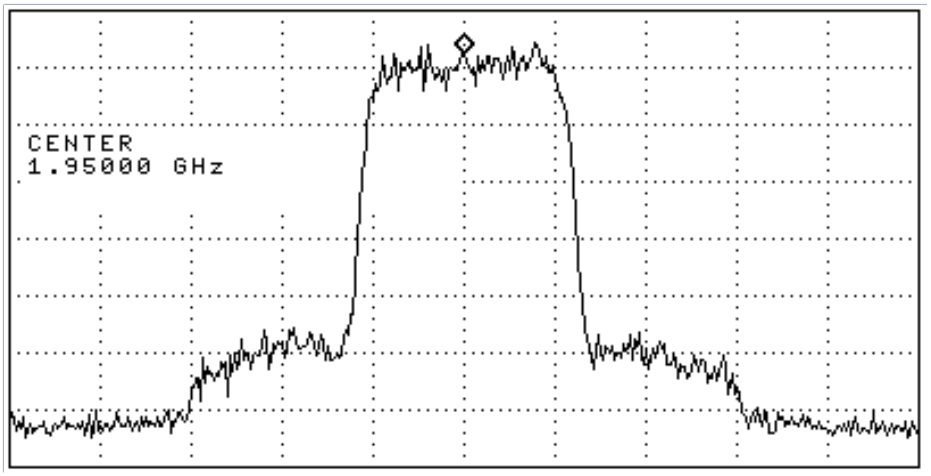

Figure 3.2.1.6 (a)

3.3 GSM Rx Part Troubleshooting

3.3.1 GSM 850 Rx

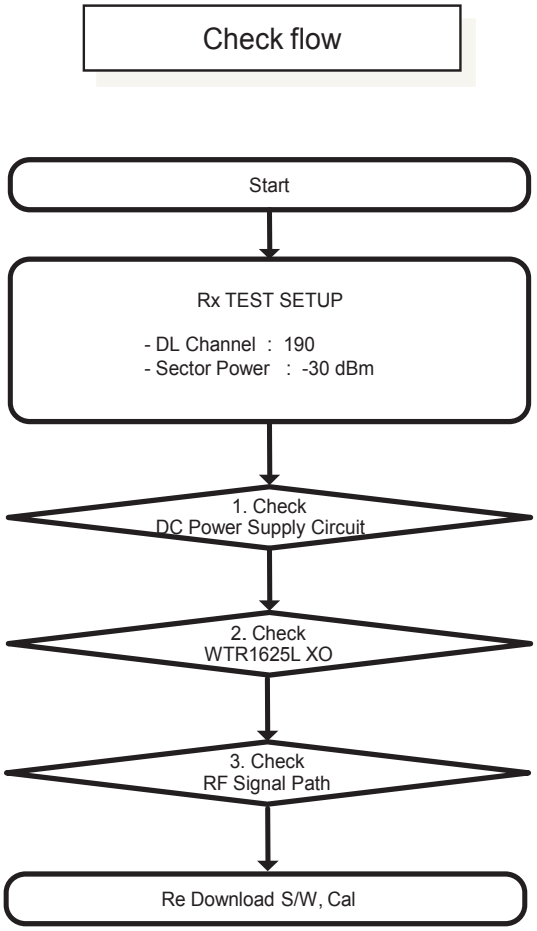

※ There are no Test Points on the IQ Data Line. So It is impossible to check the IQ Data Wave Form.

3.3.1 GSM 850 Rx

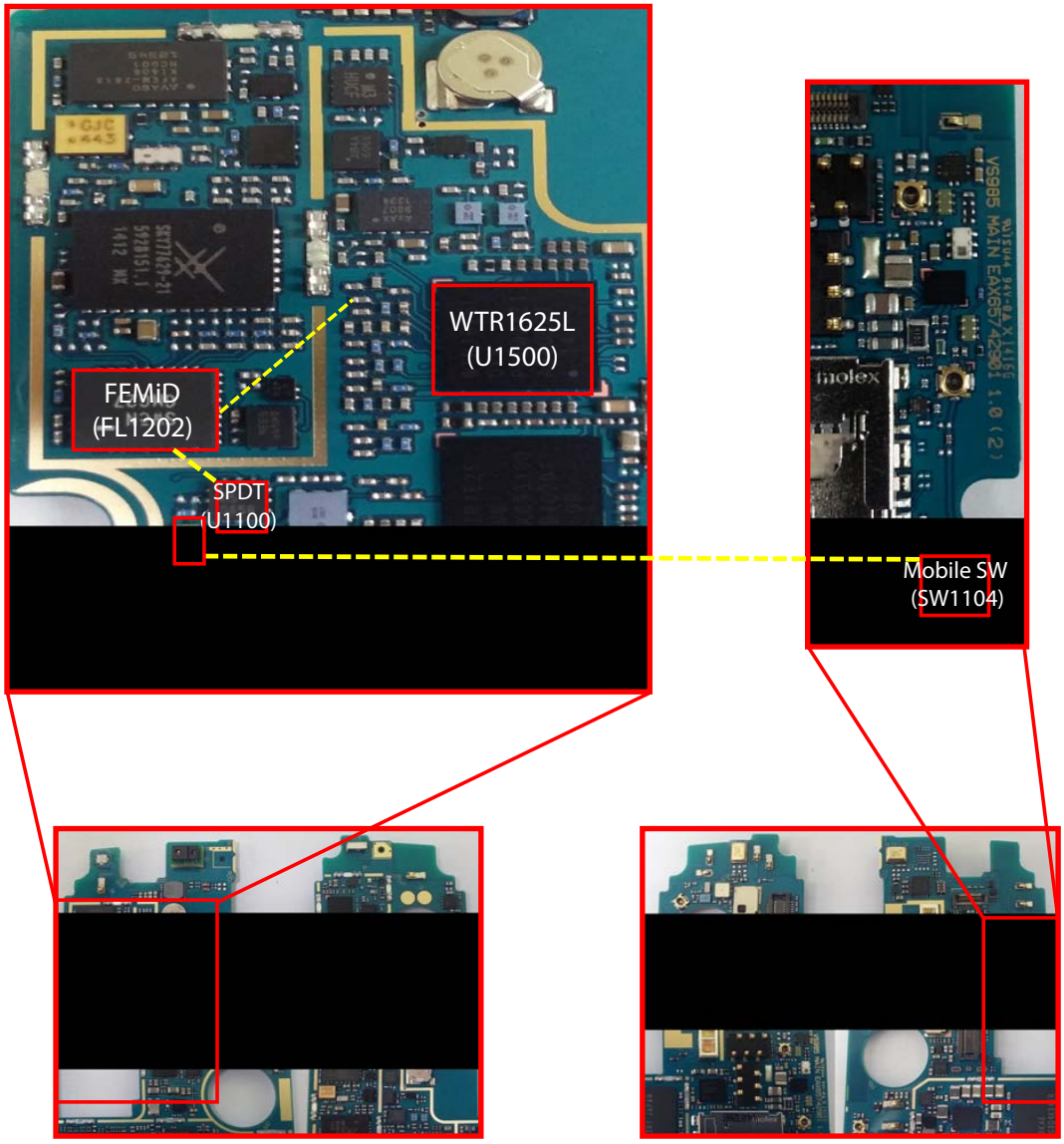

< AS985 _Main PCB_Top>

< AS985 _Main PCB_Bottom>

3.3.1.1 Checking DC Power Supply Circuit

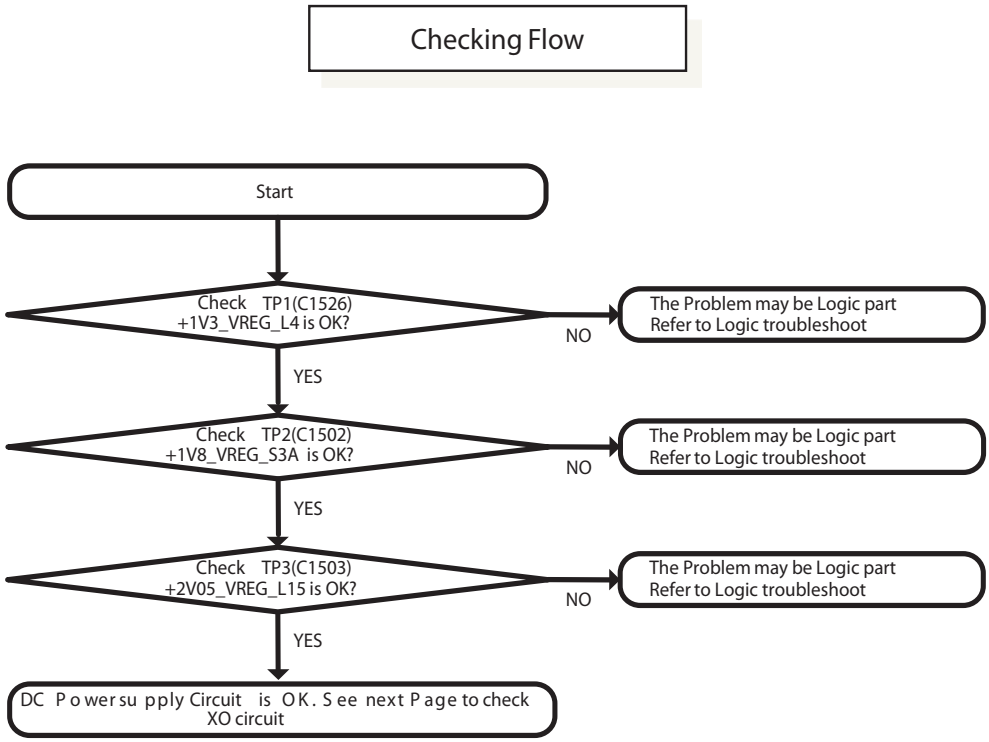

3.3.1.1 Checking DC Power Supply Circuit

Test Point

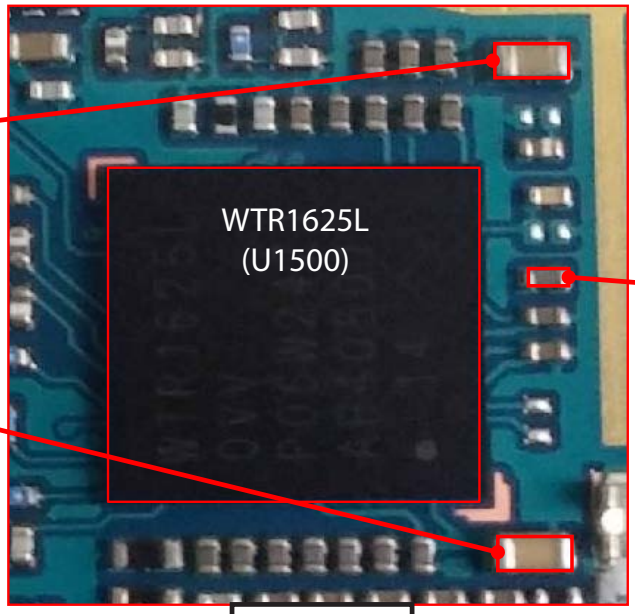

Top Side

Circuit Diagram

+1V3V_VREG_L4 / +1V8_VREG_S3A / +2V05_VREG_L15

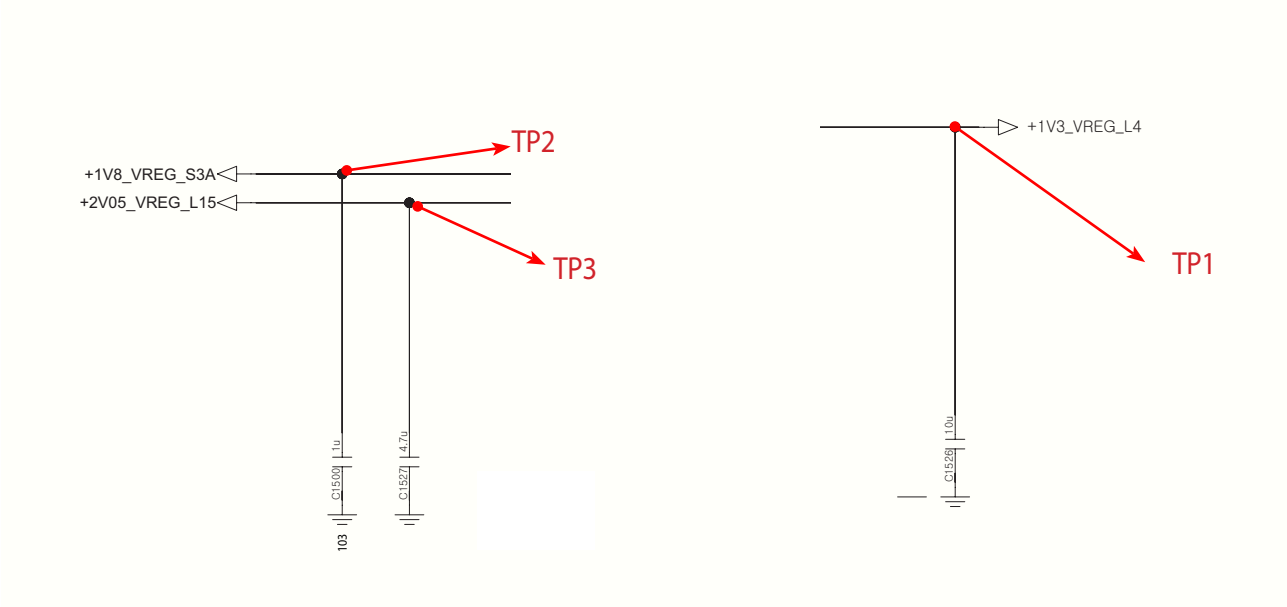

3.3.1.2 Checking WTR1625L XO Circuit

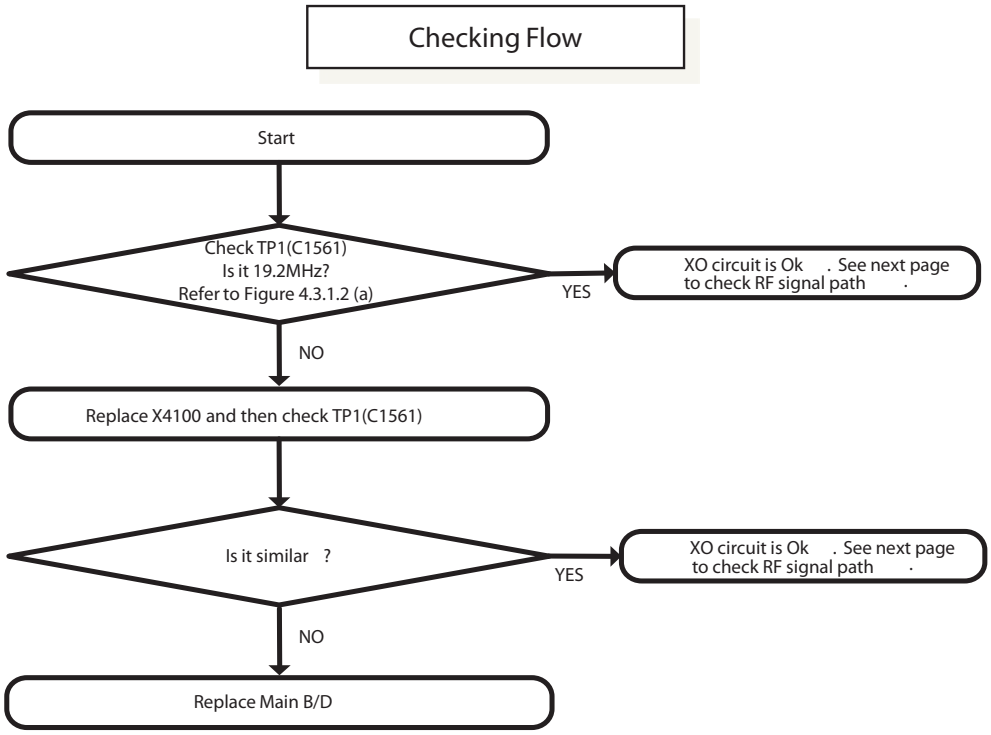

Waveform

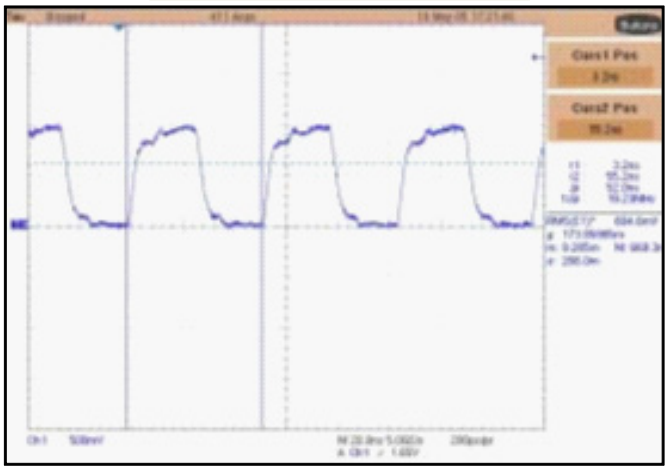

Figure 3.3.1.2 (a)

3.3.1.2 Checking WTR1625L XO Circuit

Test Point

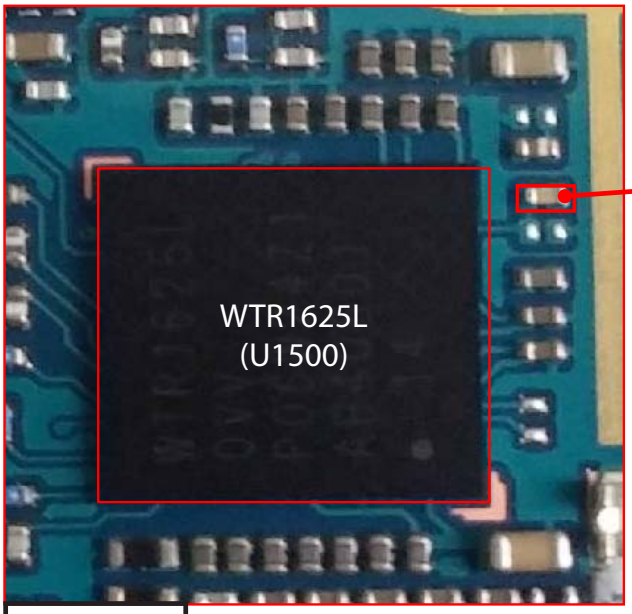

TP1 : C1561
(WTR0_XO_IN)

Top Side

Circuit Diagram

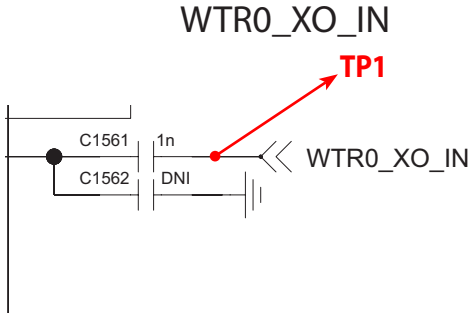

3.3.1.3 Checking RF Signal Path (SPDT)

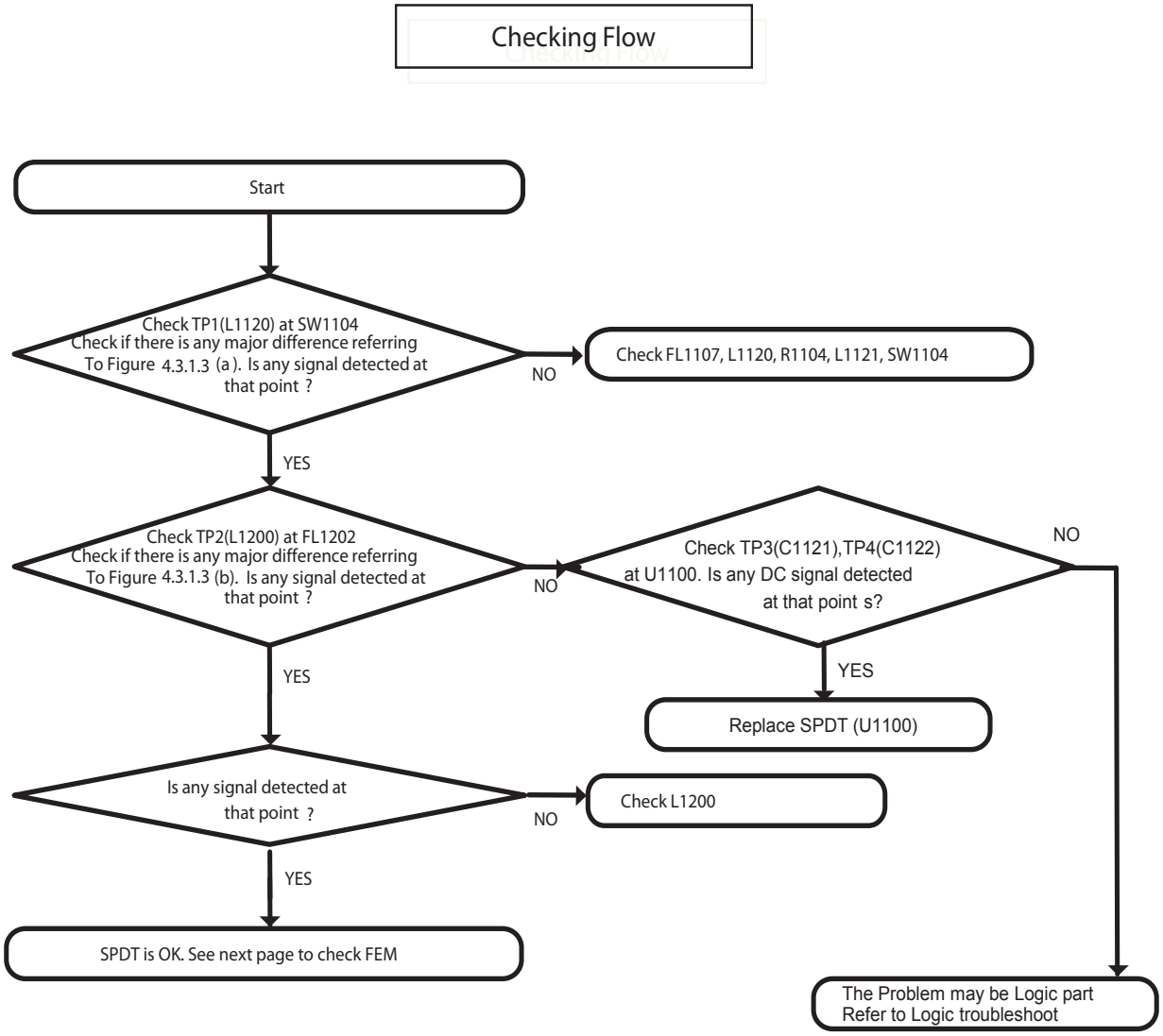

3.3.1.3 Checking RF Signal Path (SPDT)

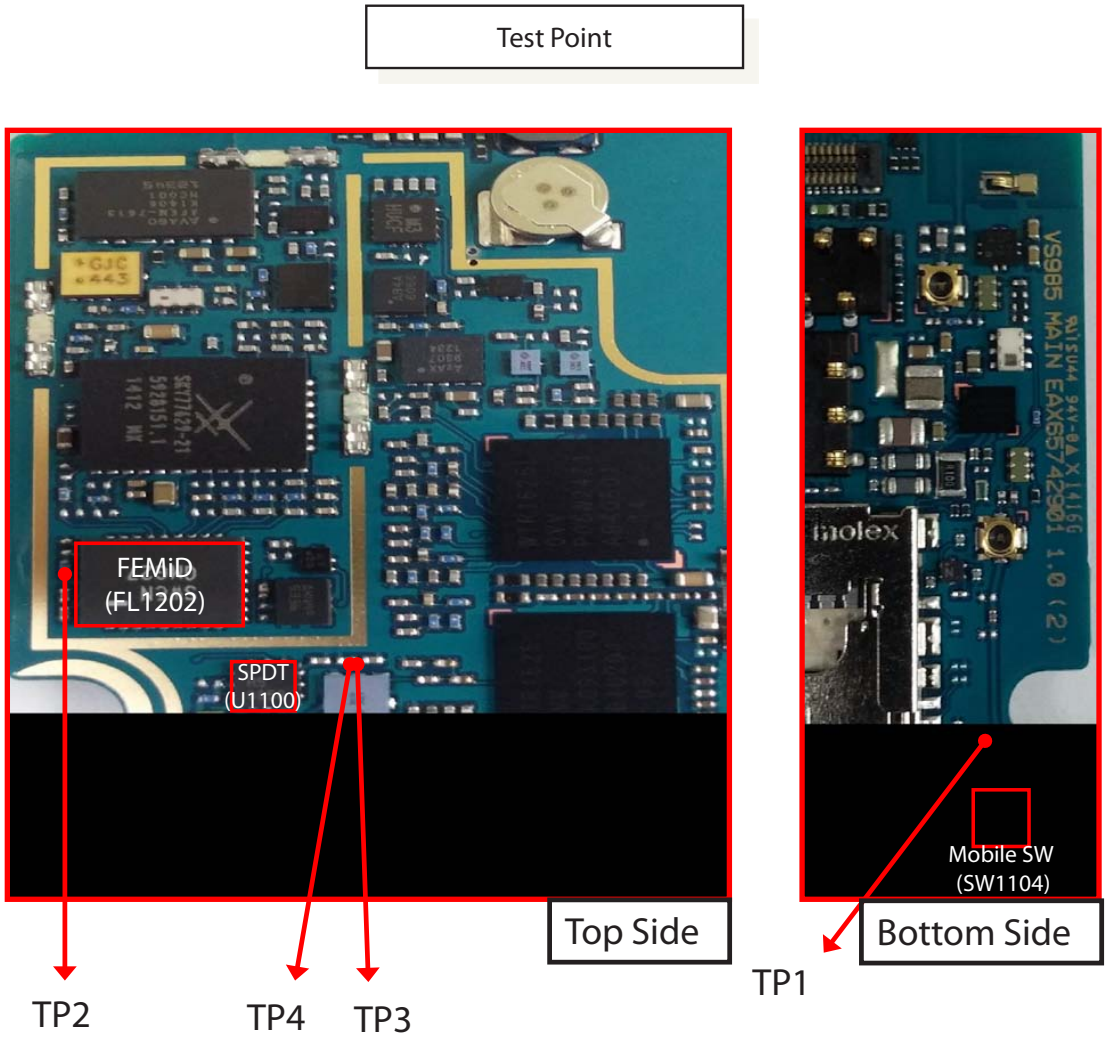

3.3.1.3 Checking RF Signal Path (SPDT)

Circuit Diagram

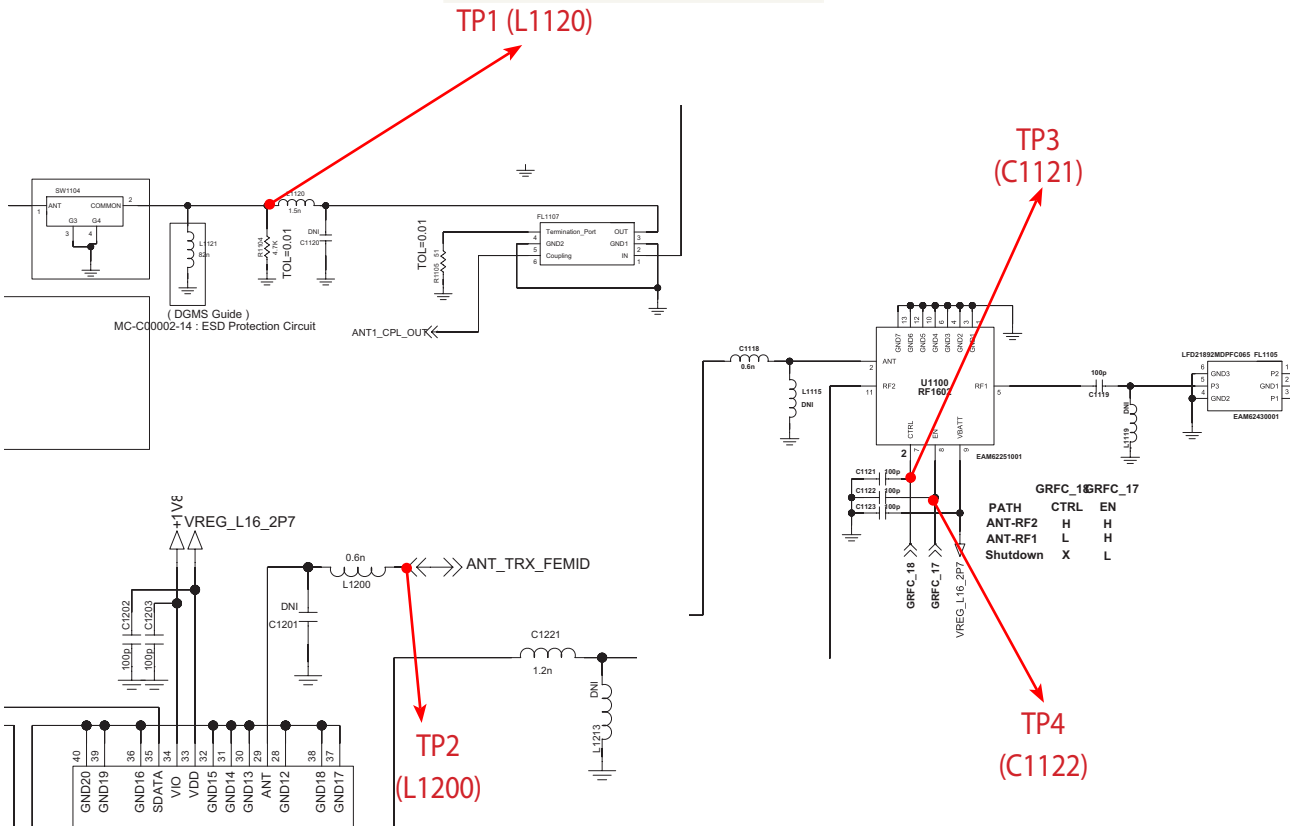

Waveform

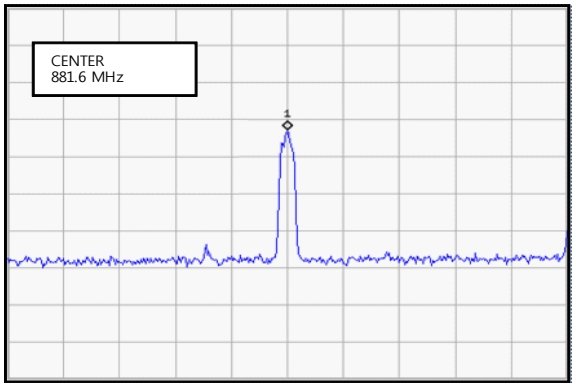

Figure 3.3.1.3 (a)

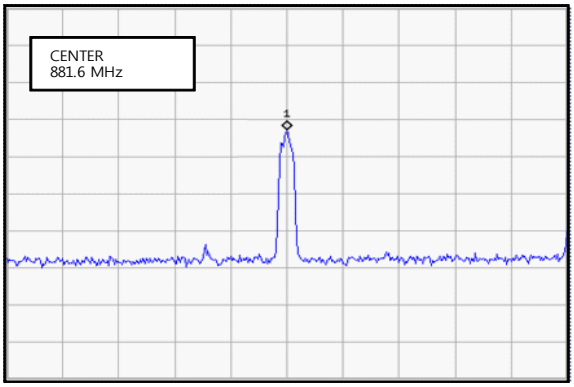

Figure 3.3.1.3 (b)

3.3.1.4 Checking RF Signal Path (FEM)

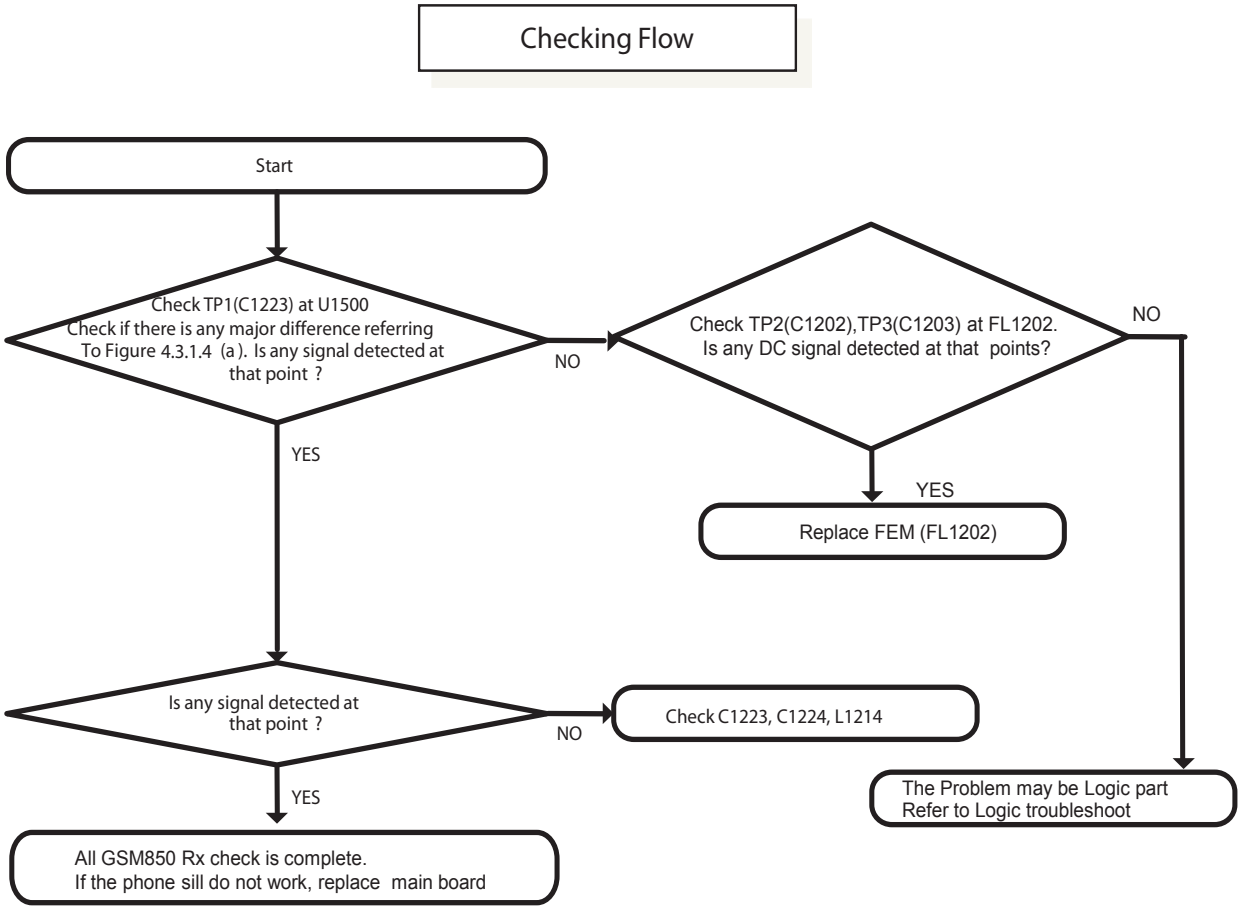

3.3.1.4 Checking RF Signal Path (FEM)

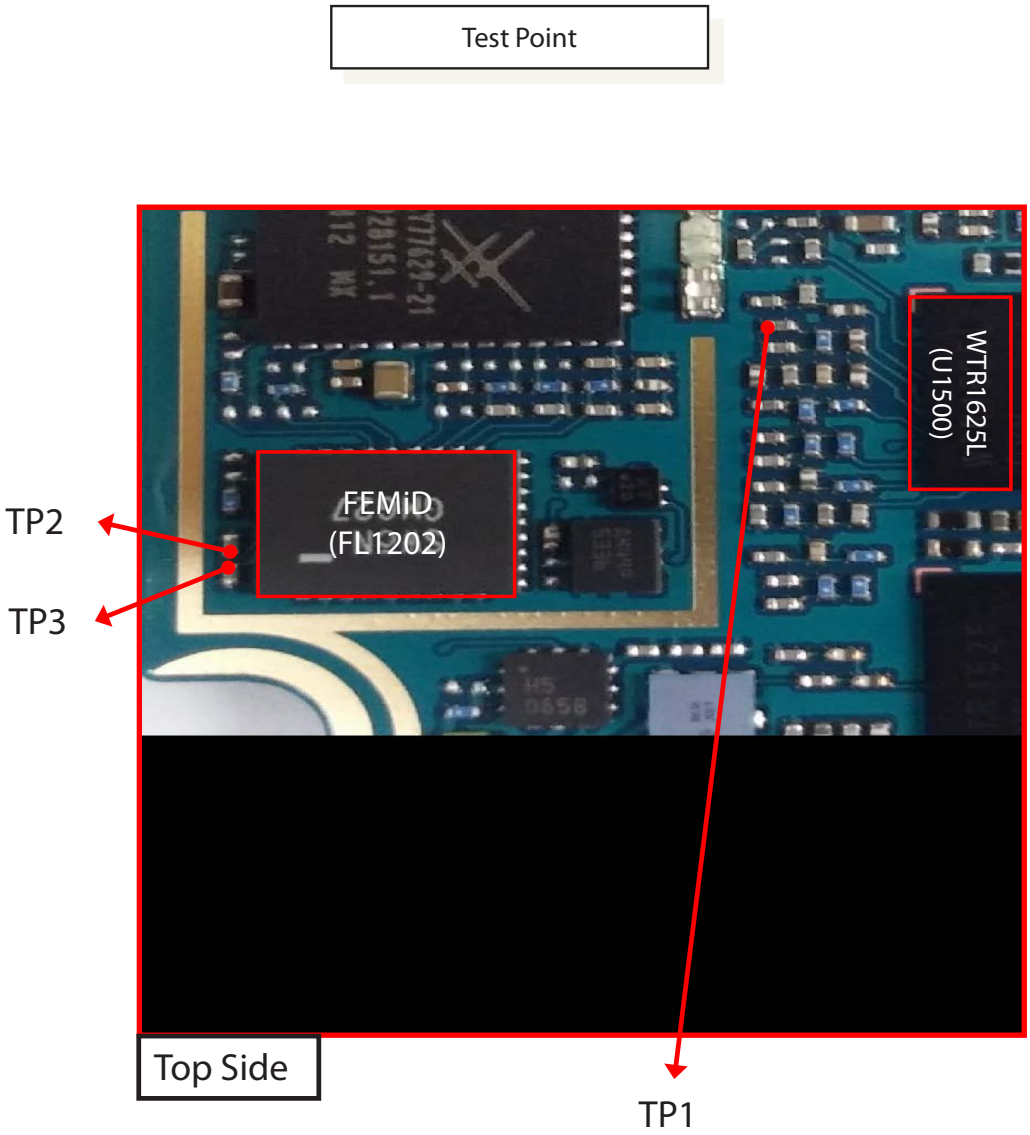

Circuit Diagram

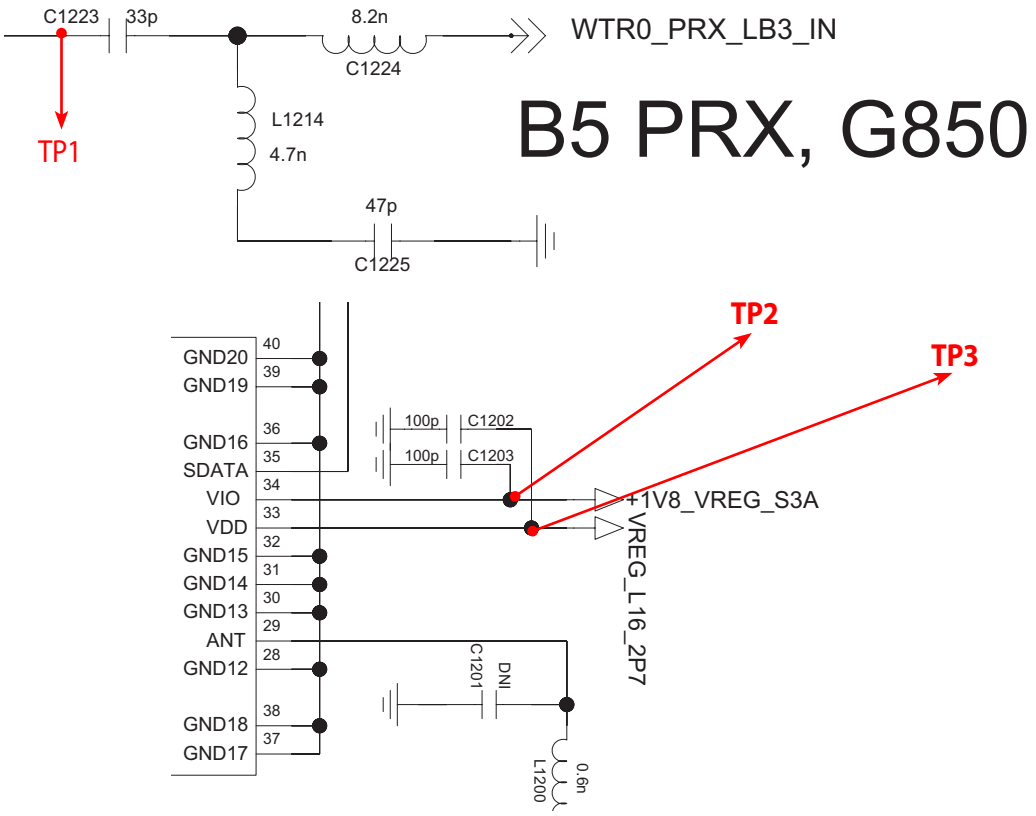

Waveform

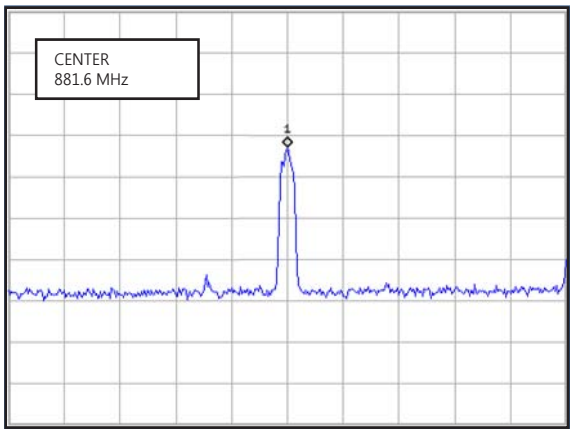

Figure 3.3.1.4 (a)

3.3.2 GSM 900 Rx

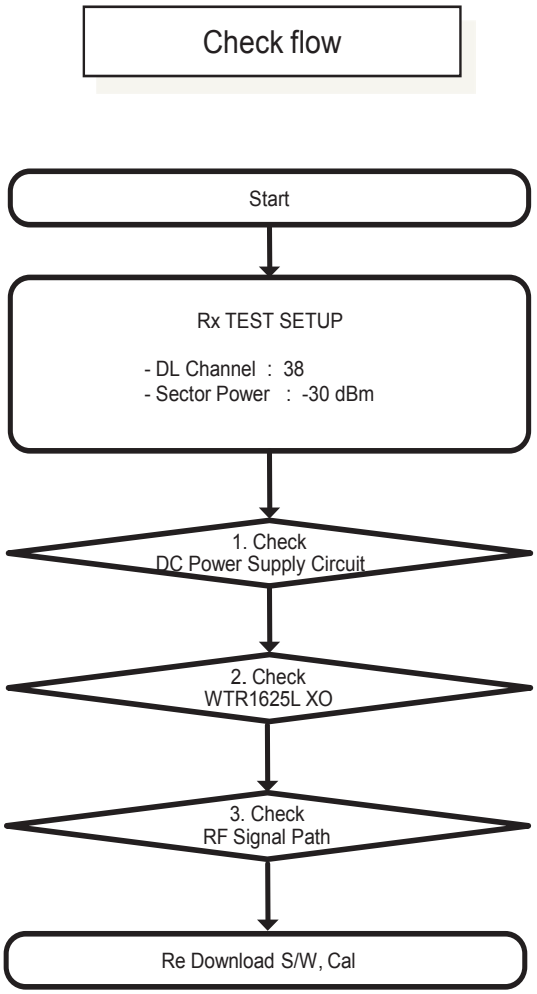

※ There are no Test Points on the IQ Data Line. So It is impossible to check the IQ Data Wave Form.

3.3.2 GSM 900 Rx

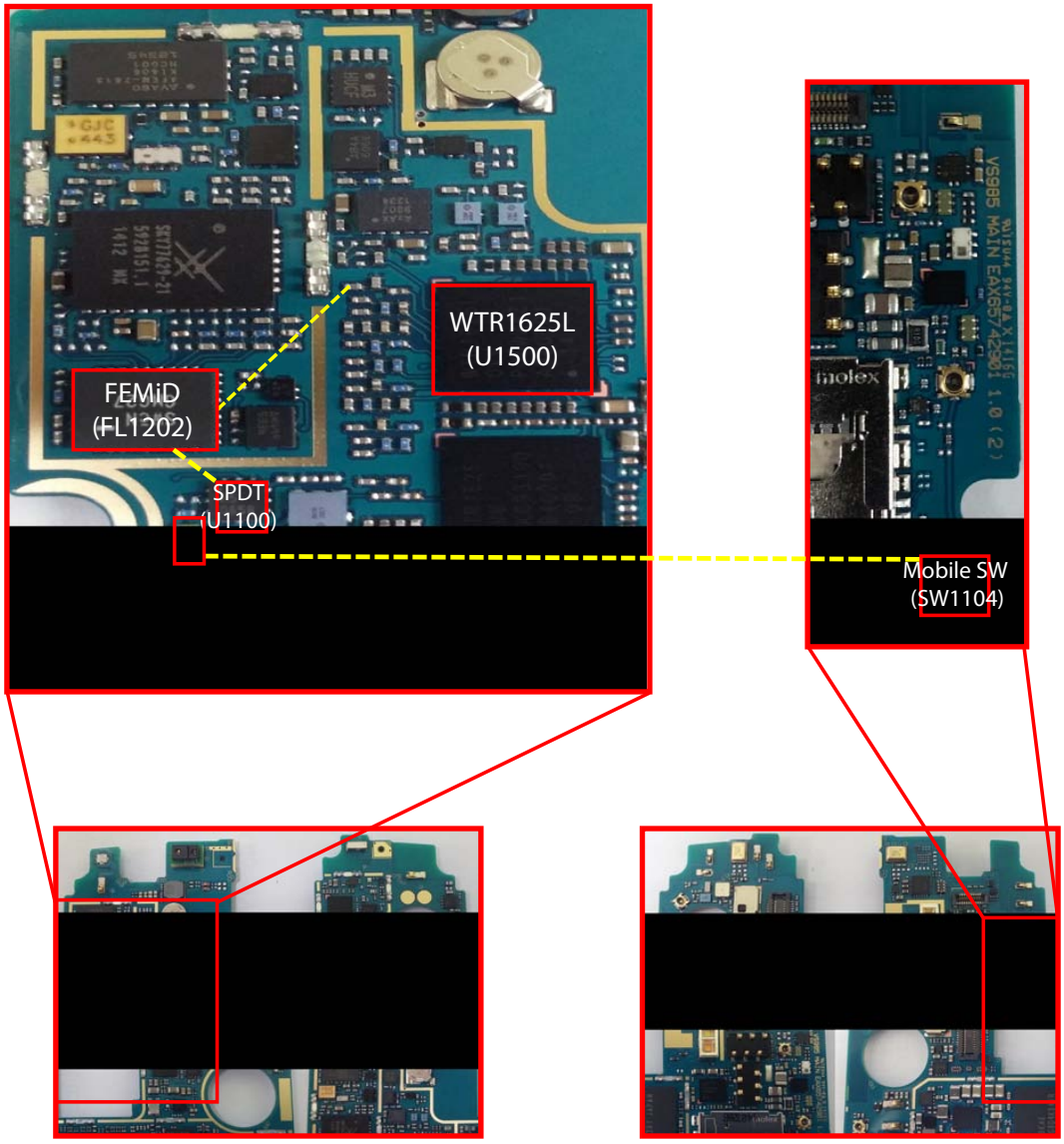

< AS985 _Main PCB_Top>

< AS985 _Main PCB_Bottom>

3.3.2.1 Checking DC Power Supply Circuit

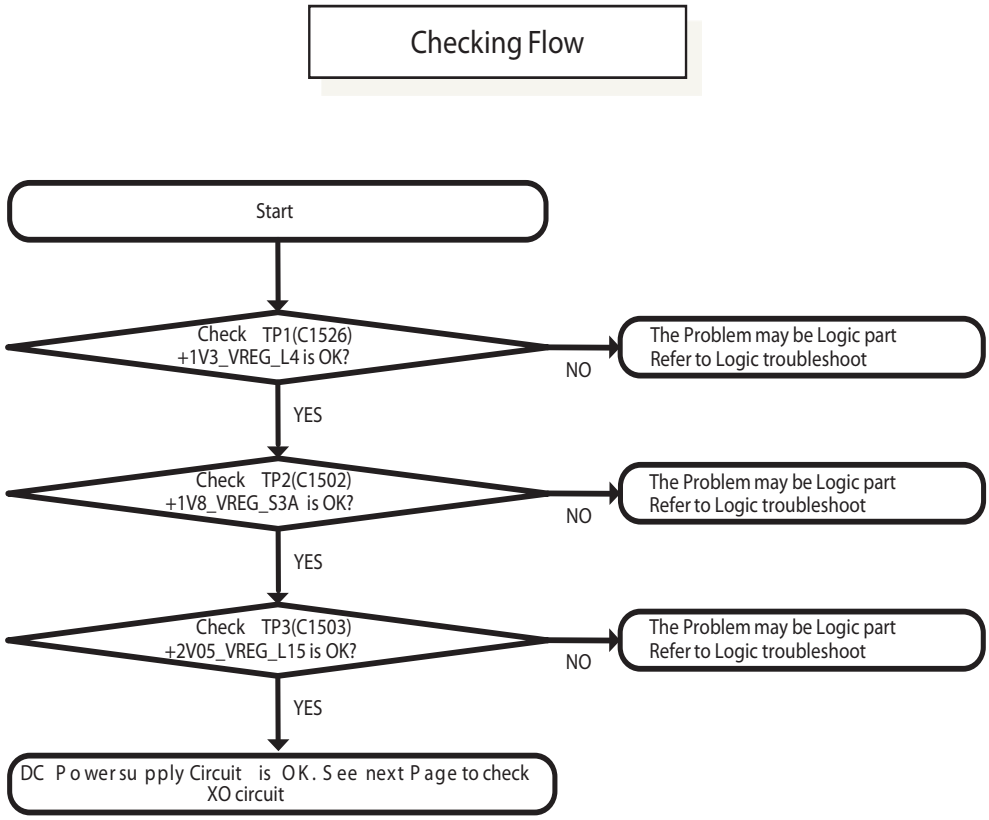

3.3.2.1 Checking DC Power Supply Circuit

Test Point

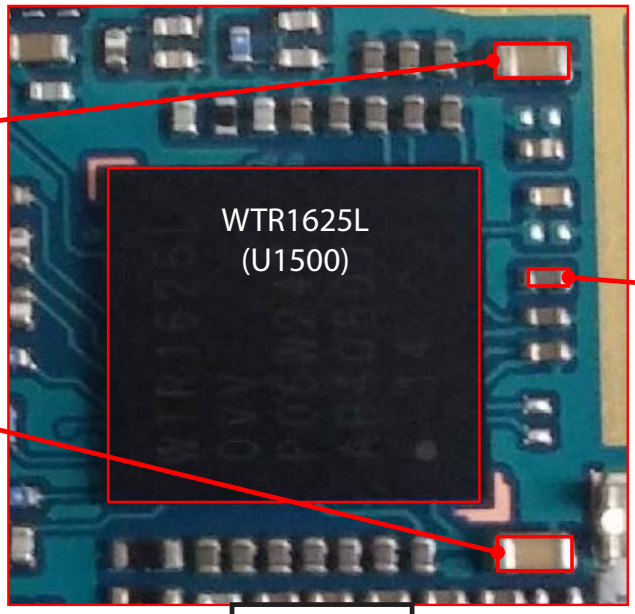

Top Side

Circuit Diagram

+1V3V_VREG_L4 / +1V8_VREG_S3A / +2V05_VREG_L15

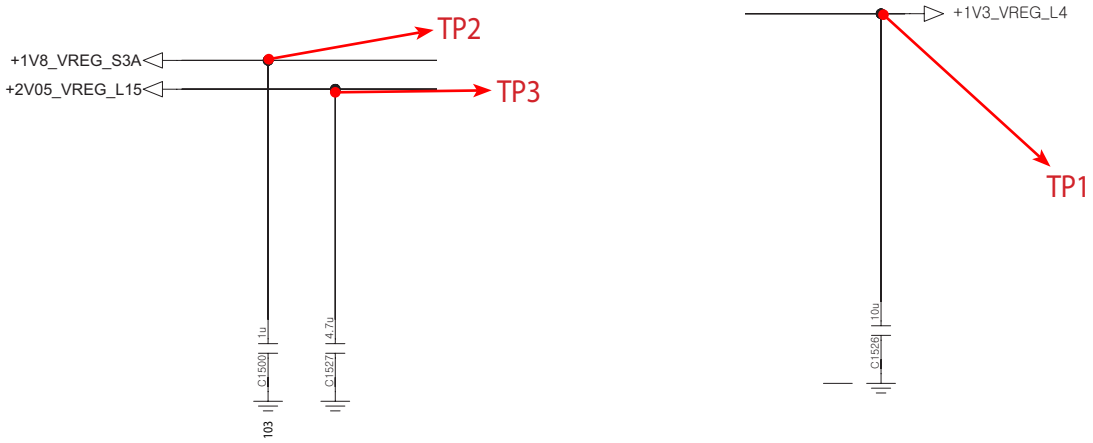

3.3.2.2 Checking WTR1625L XO Circuit

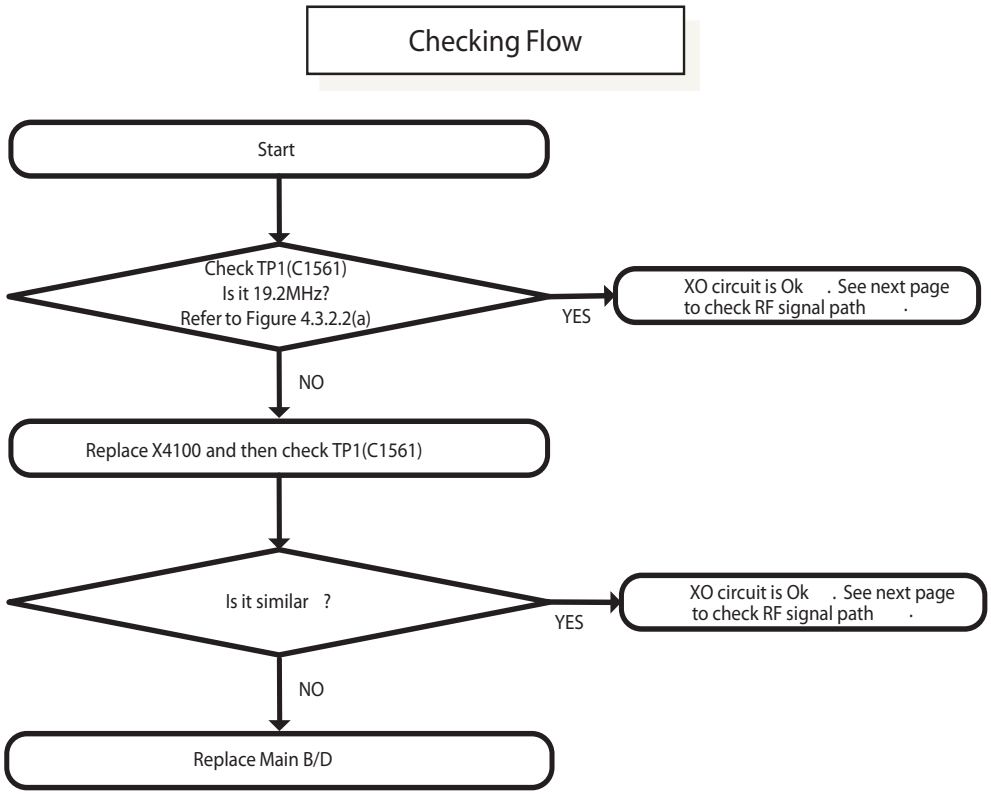

Waveform

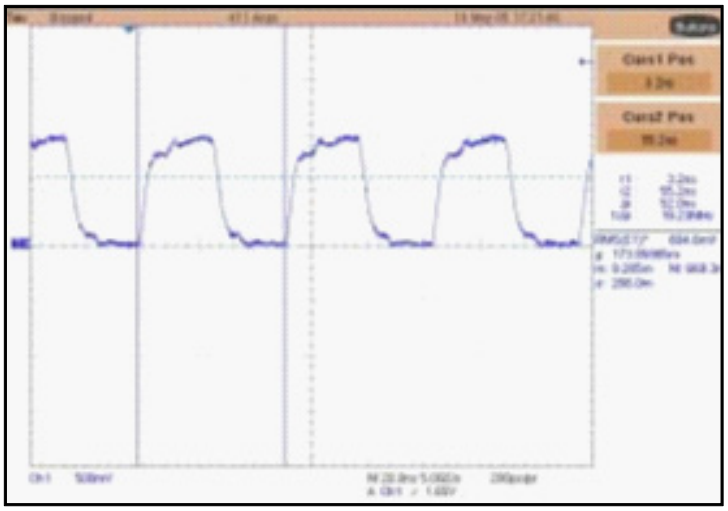

Figure 3.3.2.2 (a)

3.3.2.2 Checking WTR1625L XO Circuit

Test Point

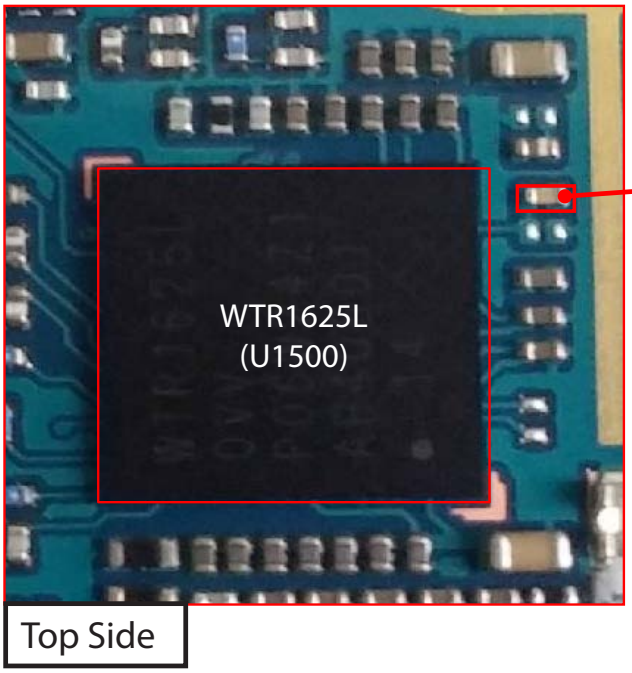

TP1 : C1561
(WTR0_XO_IN)

Circuit Diagram

WTR0_XO_IN

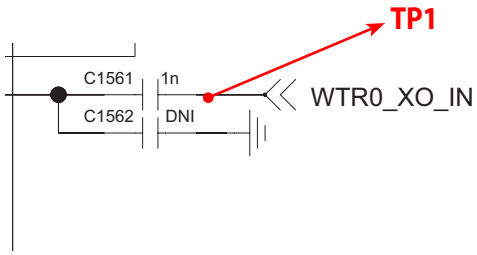

3.3.2.3 Checking RF Signal Path (SPDT)

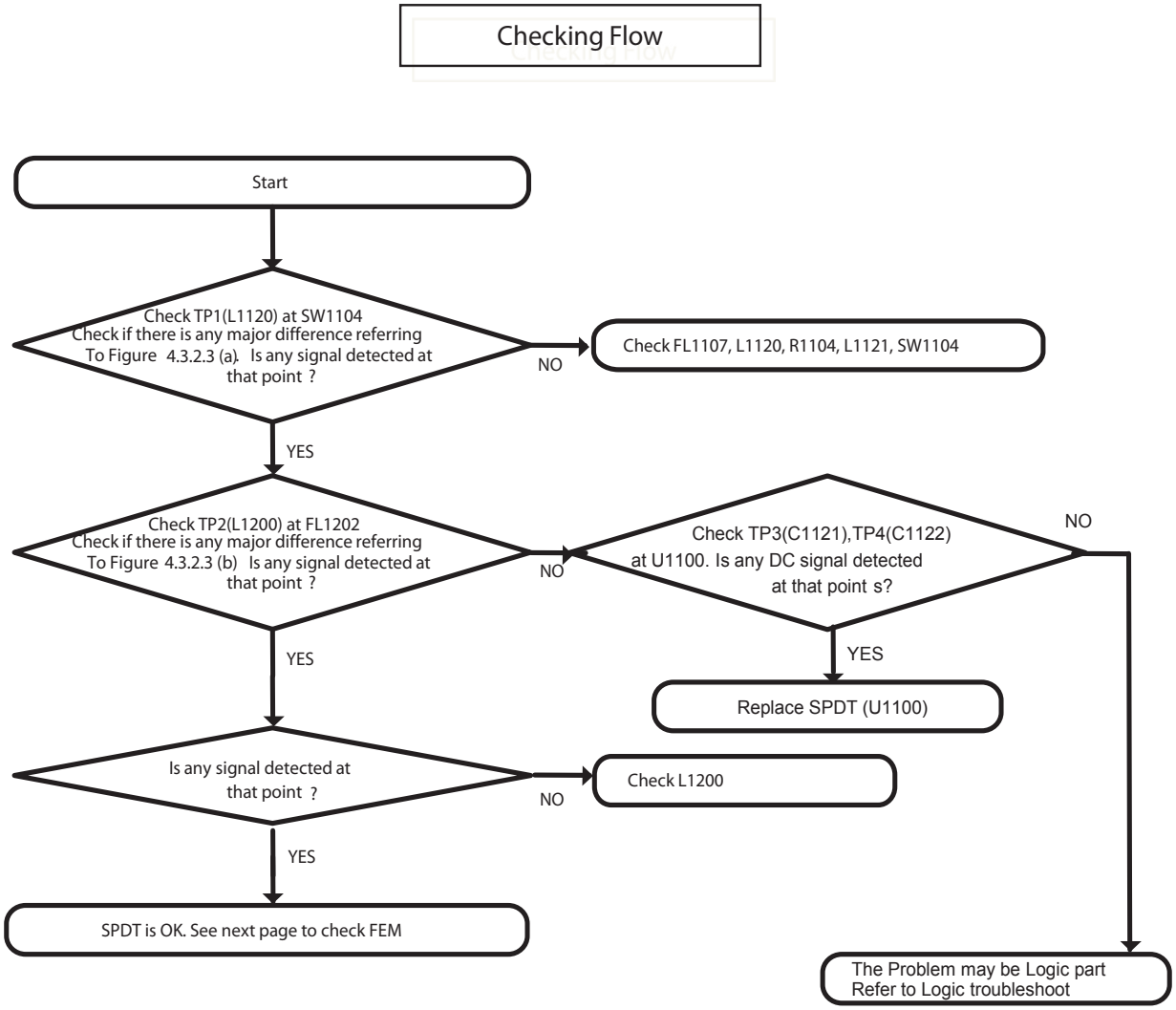

3.3.2.3 Checking RF Signal Path (SPDT)

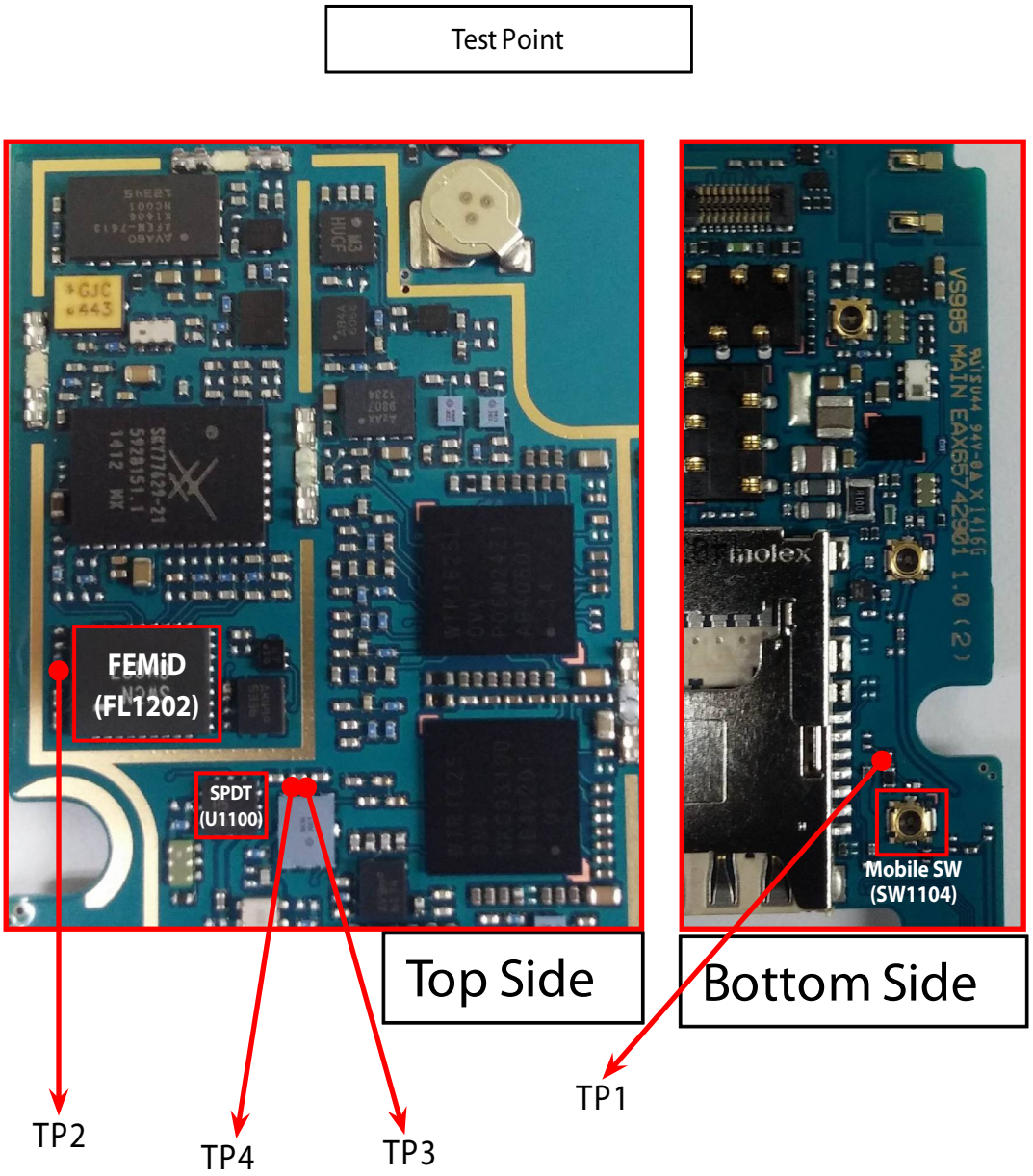

3.3.2.3 Checking RF Signal Path (SPDT)

Circuit Diagram

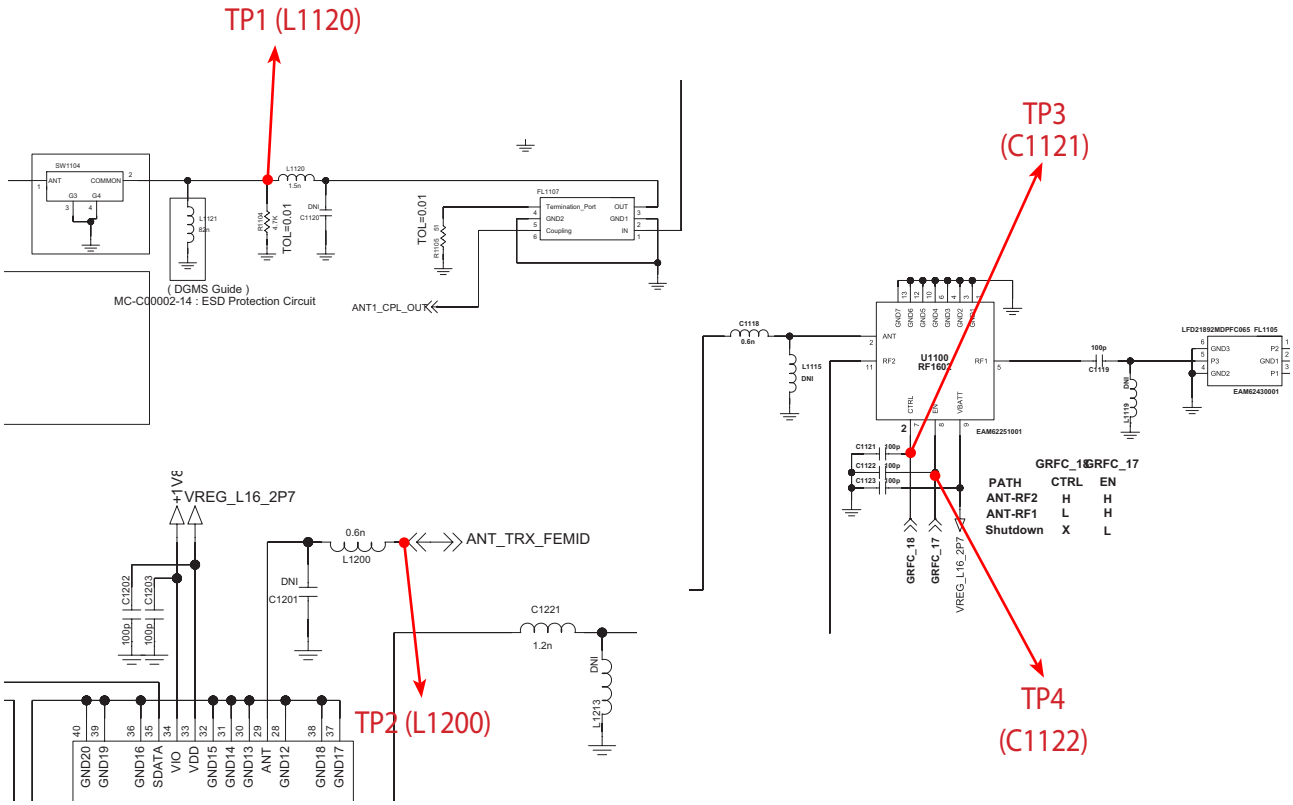

Waveform

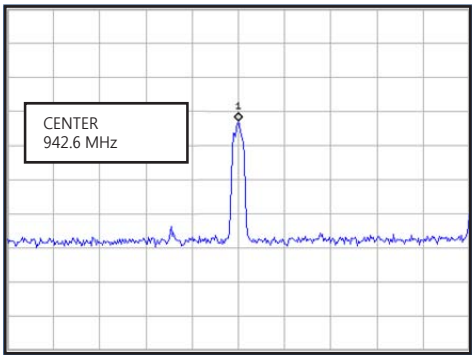

Figure 3.3.2.3 (a)

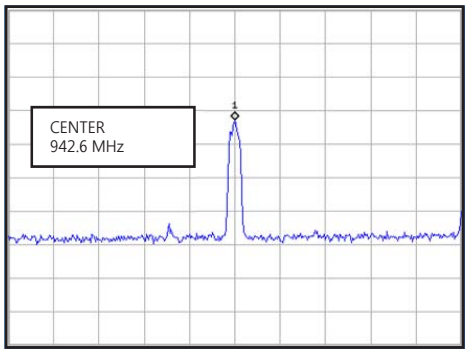

Figure 3.3.2.3 (b)

3.3.2.4 Checking RF Signal Path (FEM)

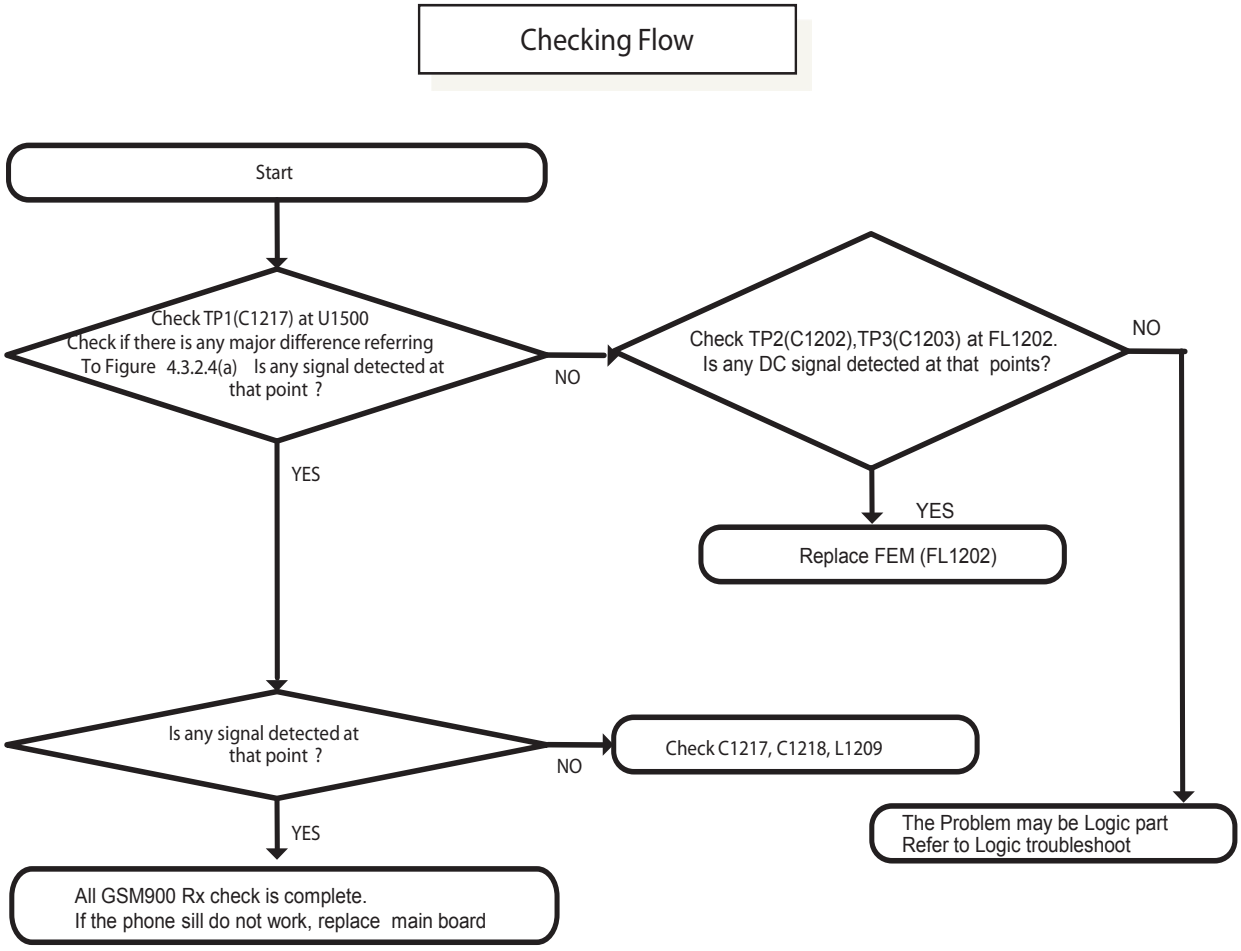

3.3.2.4 Checking RF Signal Path (FEM)

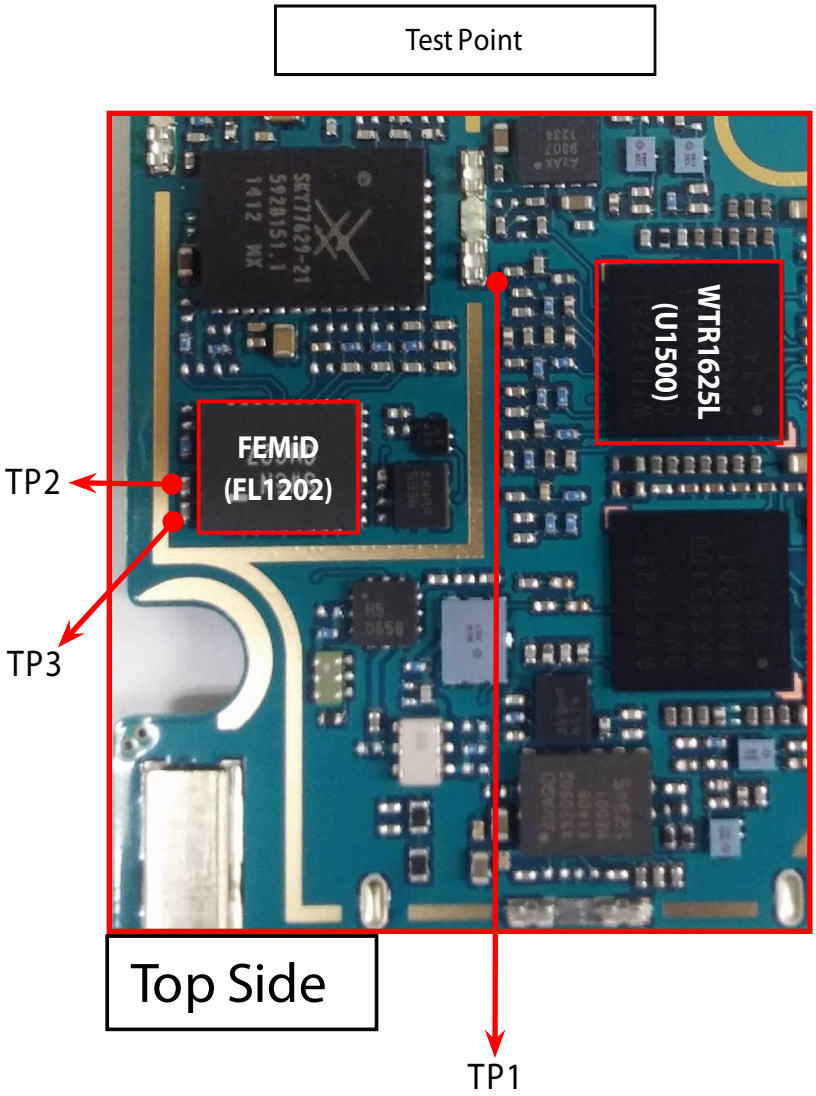

3.3.2.4 Checking RF Signal Path (FEM)

Circuit Diagram

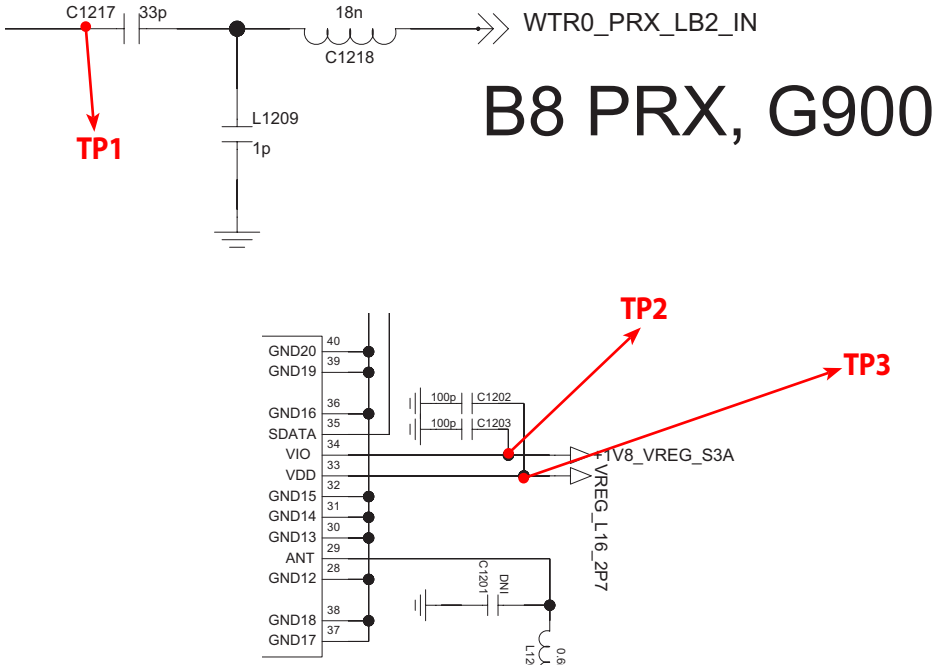

Waveform

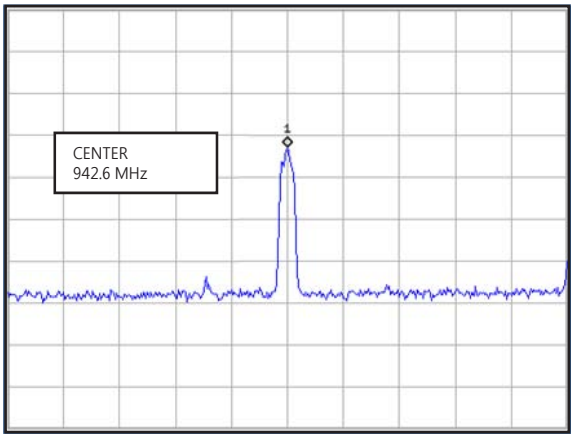

Figure 3.3.2.4 (a)

3.3.3 GSM 1800 Rx

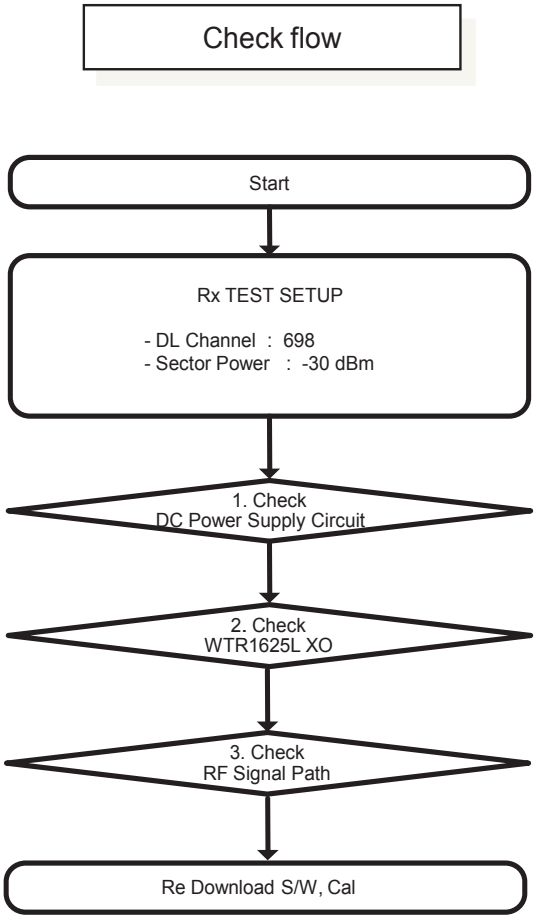

※ There are no Test Points on the IQ Data Line. So It is impossible to check the IQ Data Wave Form.

3.3.3 GSM 1800 Rx

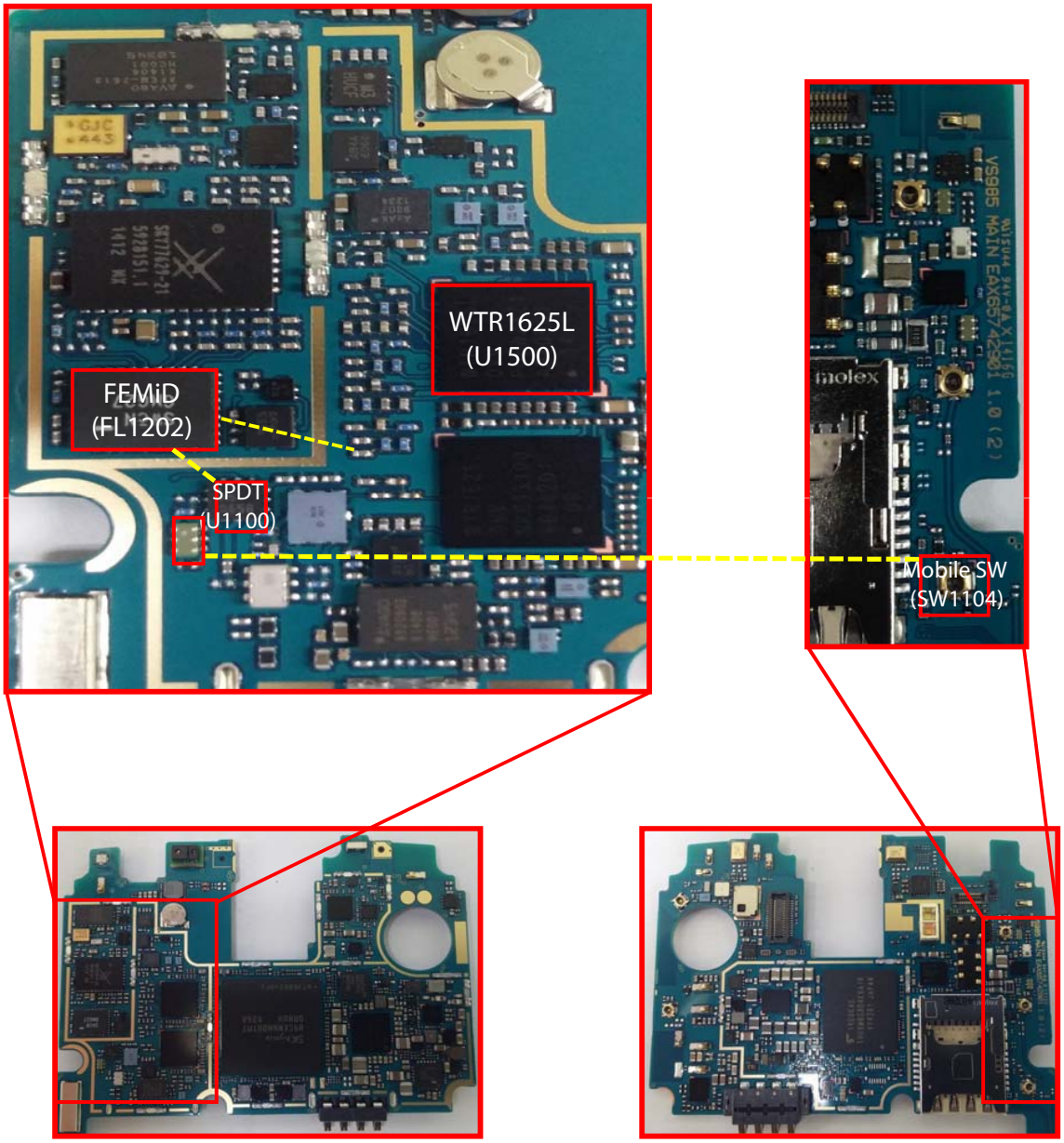

< AS985 _Main PCB_Top>

< AS985 _Main PCB_Bottom>

3.3.3.1 Checking DC Power Supply Circuit

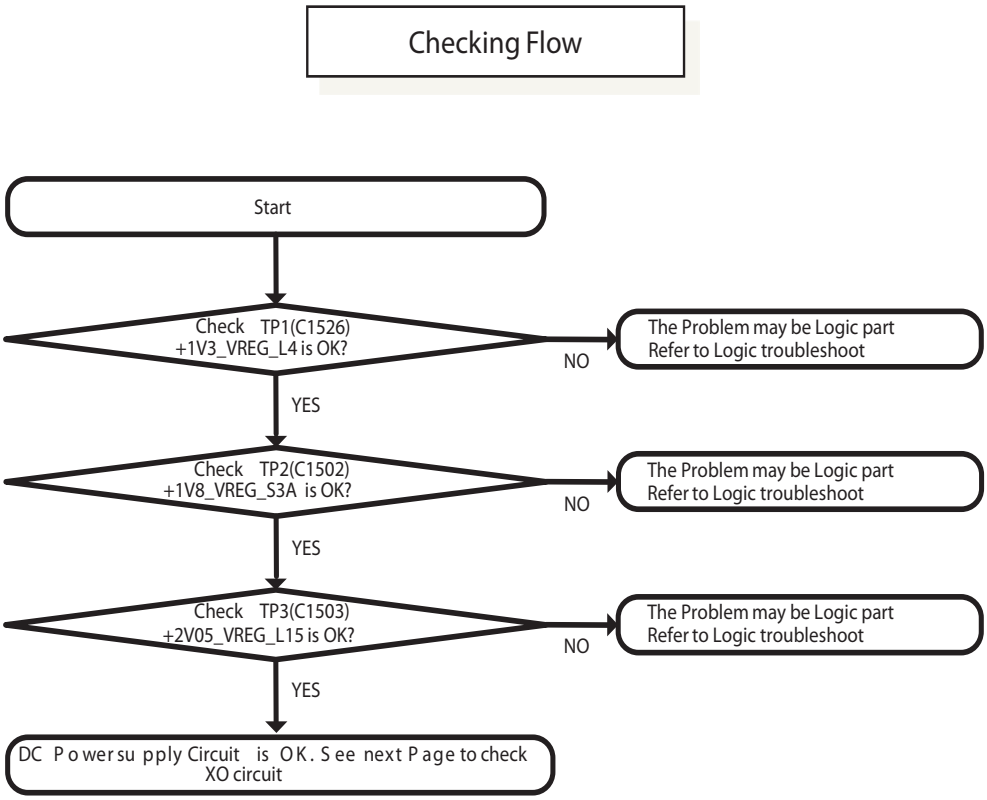

3.3.3.1 Checking DC Power Supply Circuit

Test Point

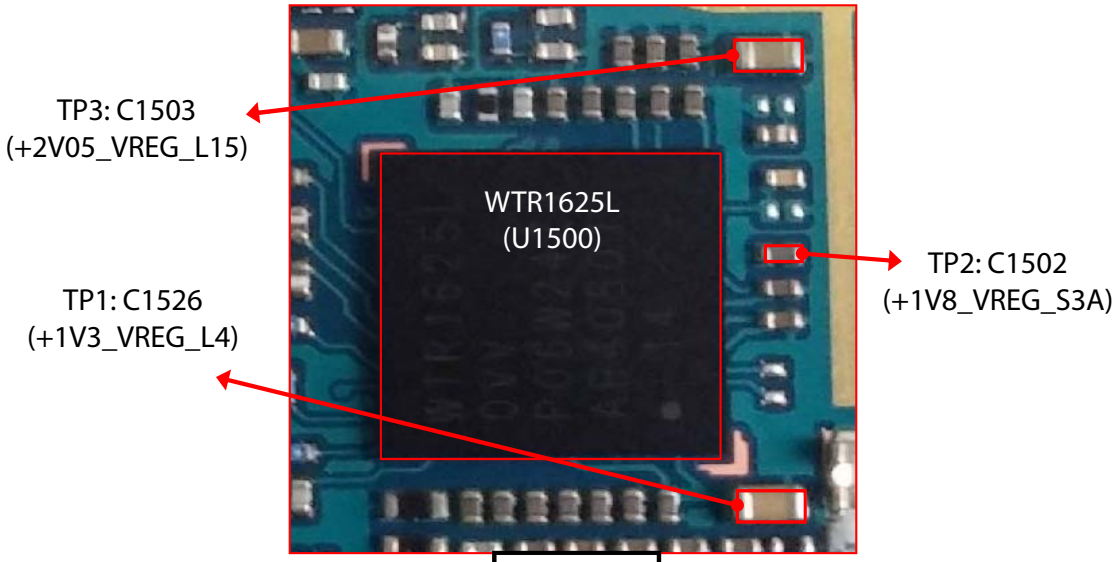

Top Side

Circuit Diagram

+1V3V_VREG_L4 / +1V8_VREG_S3A / +2V05_VREG_L15

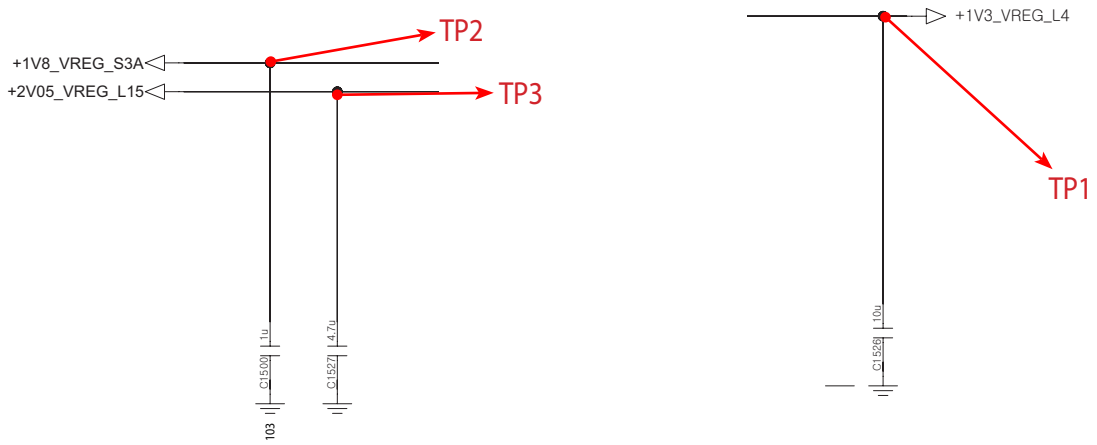

3.3.3.2 Checking WTR1625L XO Circuit

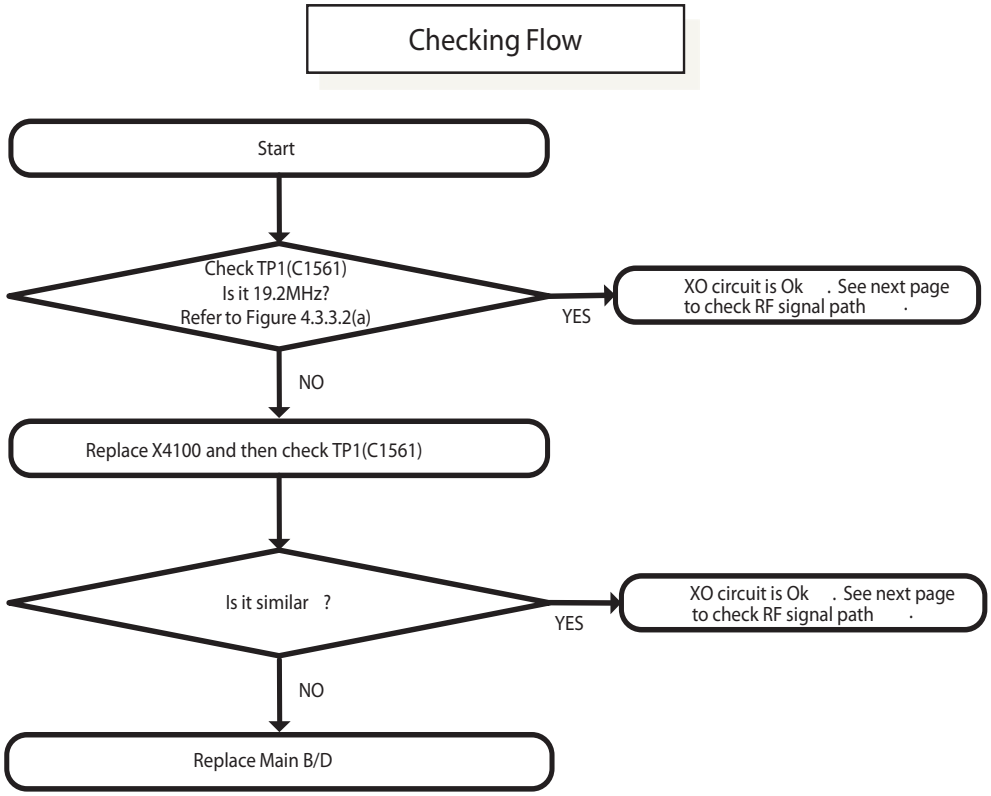

Waveform

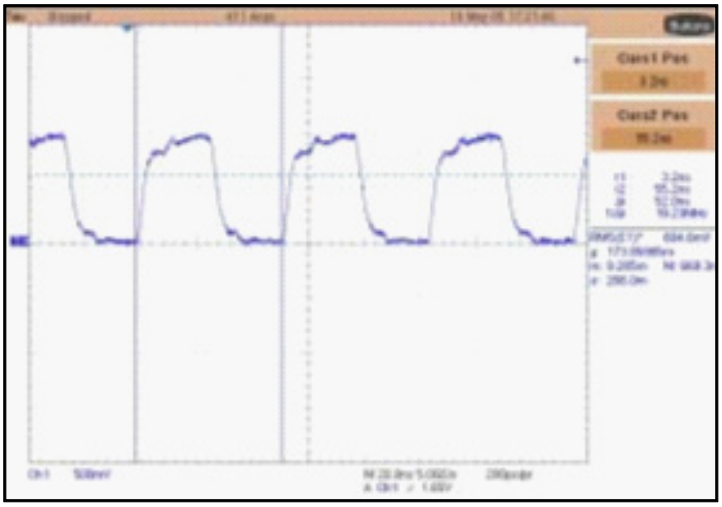

Figure 3.3.3.2 (a)

3.3.3.2 Checking WTR1625L XO Circuit

Test Point

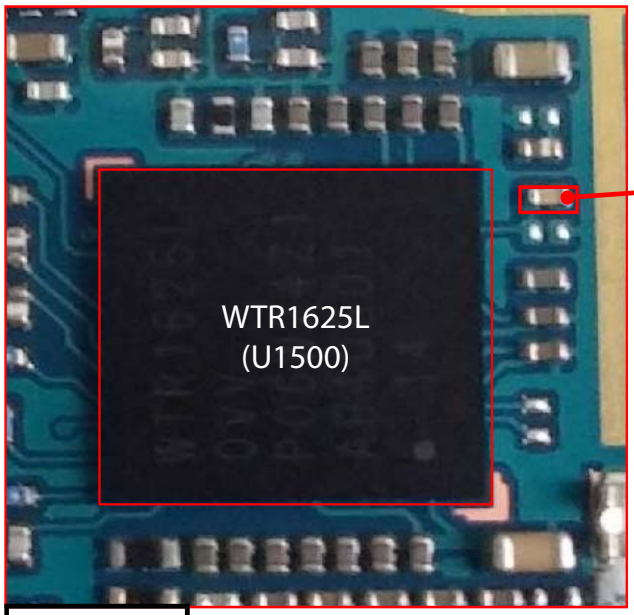

TP1 : C1561
(WTR0_XO_IN)

Top Side

Circuit Diagram

WTR0_XO_IN

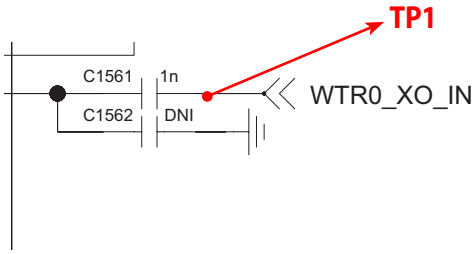

3.3.3.3 Checking RF Signal Path (SPDT)

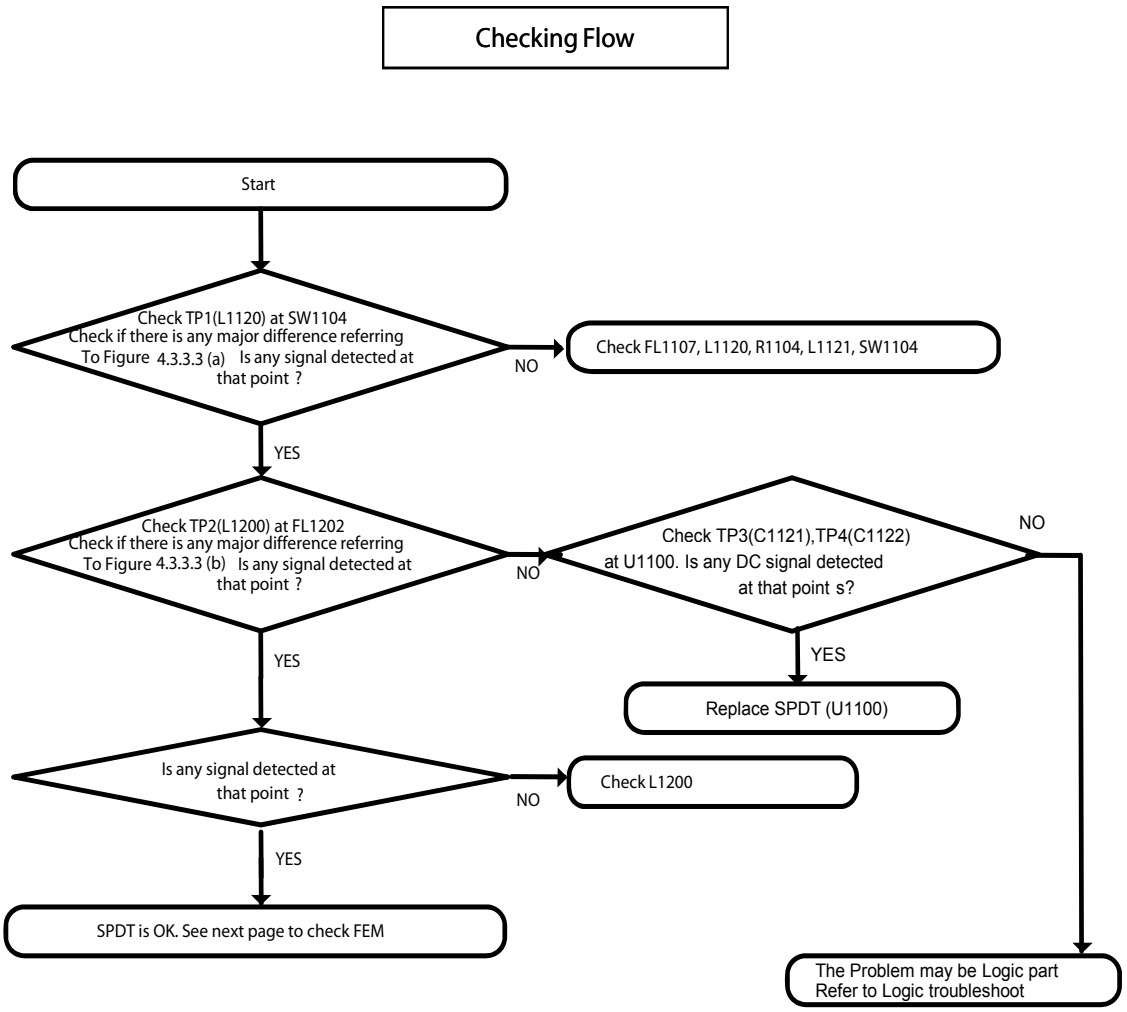

3.3.3.3 Checking RF Signal Path (SPDT)

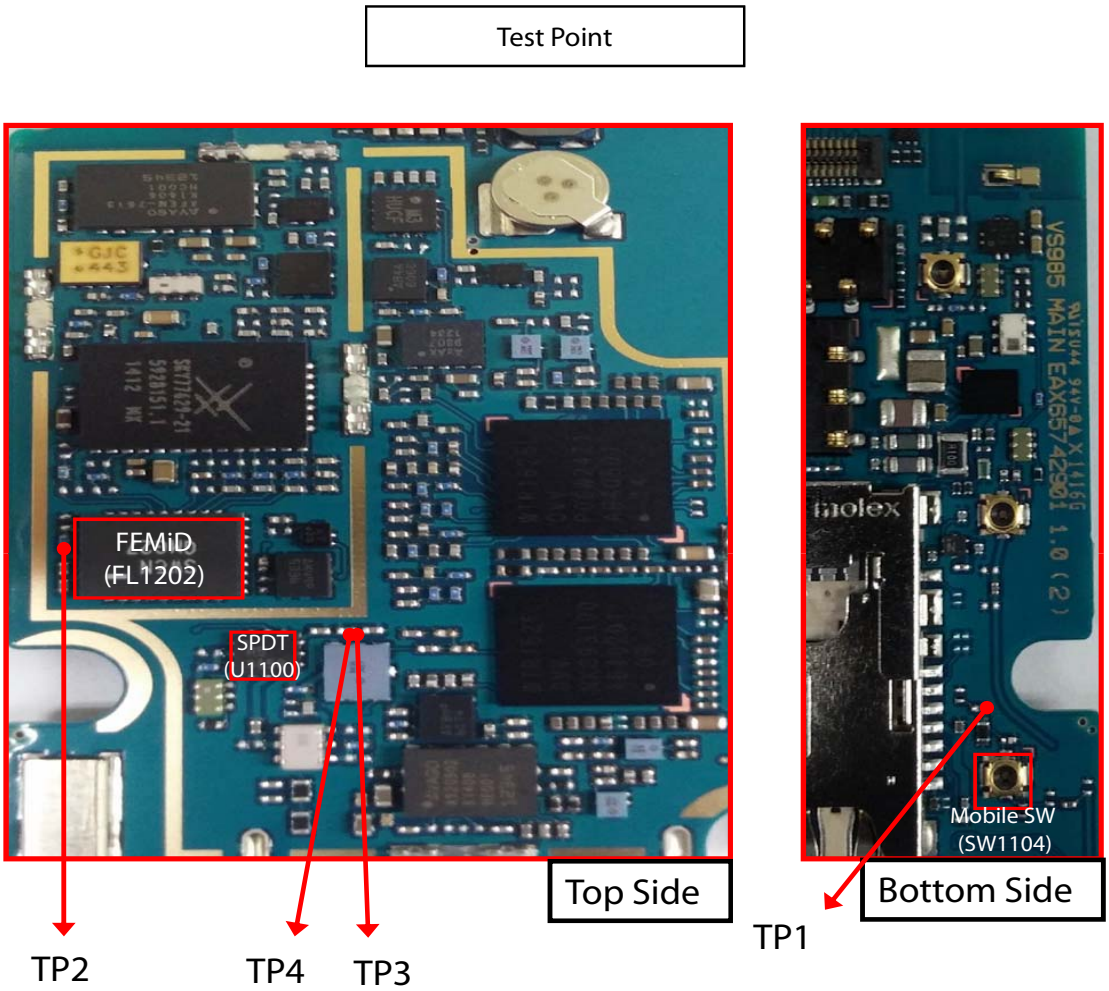

3.3.3.3 Checking RF Signal Path (SPDT)

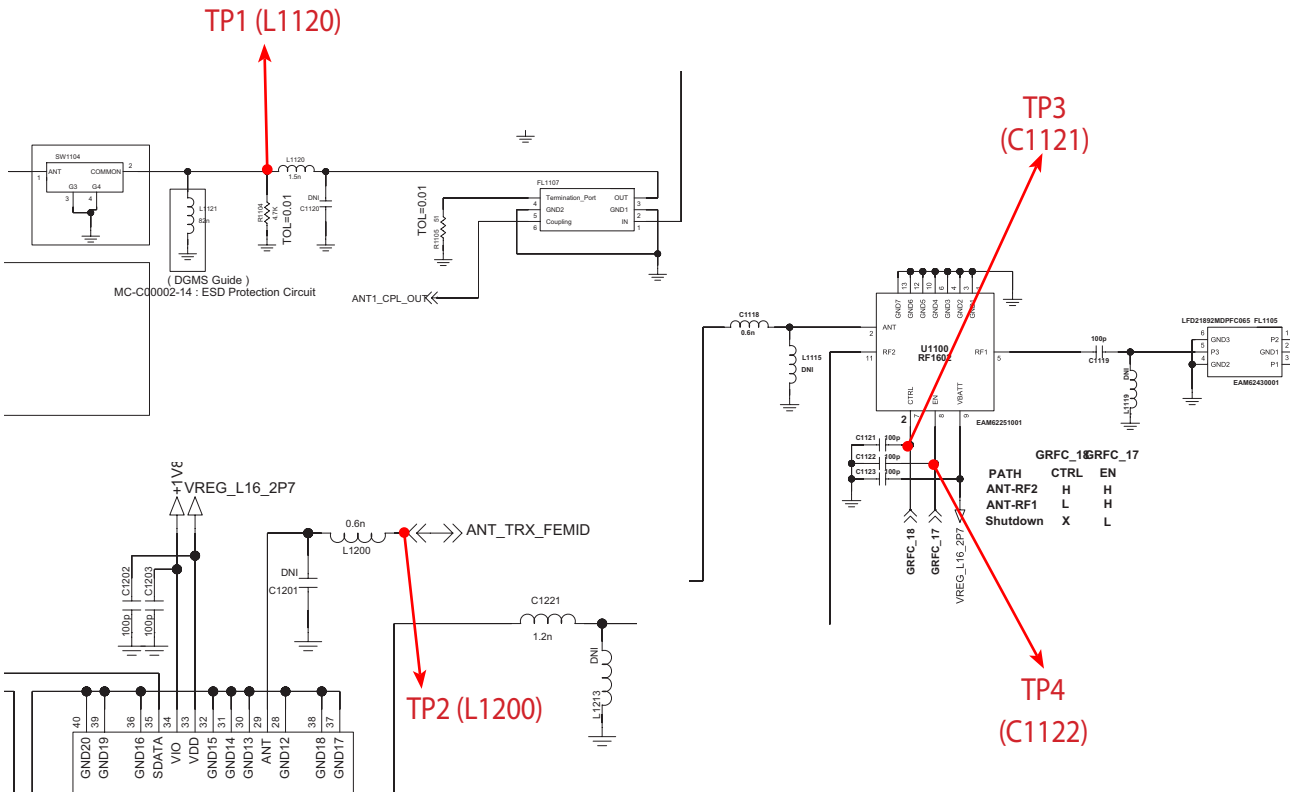

Waveform

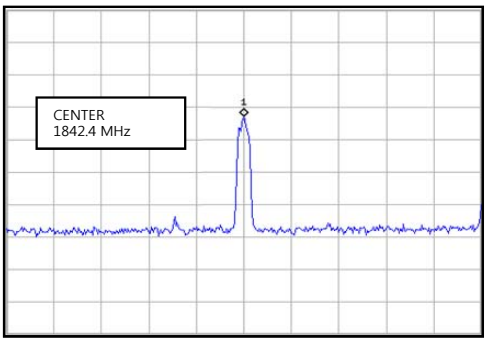

Figure 3.3.3.3 (a)

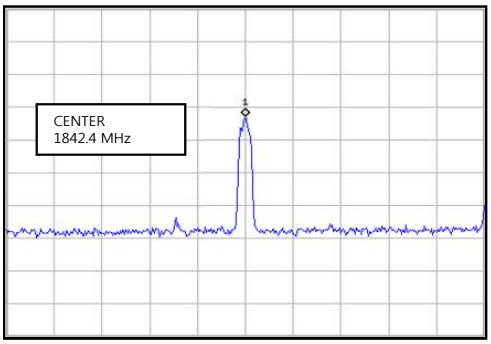

Figure 3.3.3.3 (b)

3.3.3.4 Checking RF Signal Path (FEM)

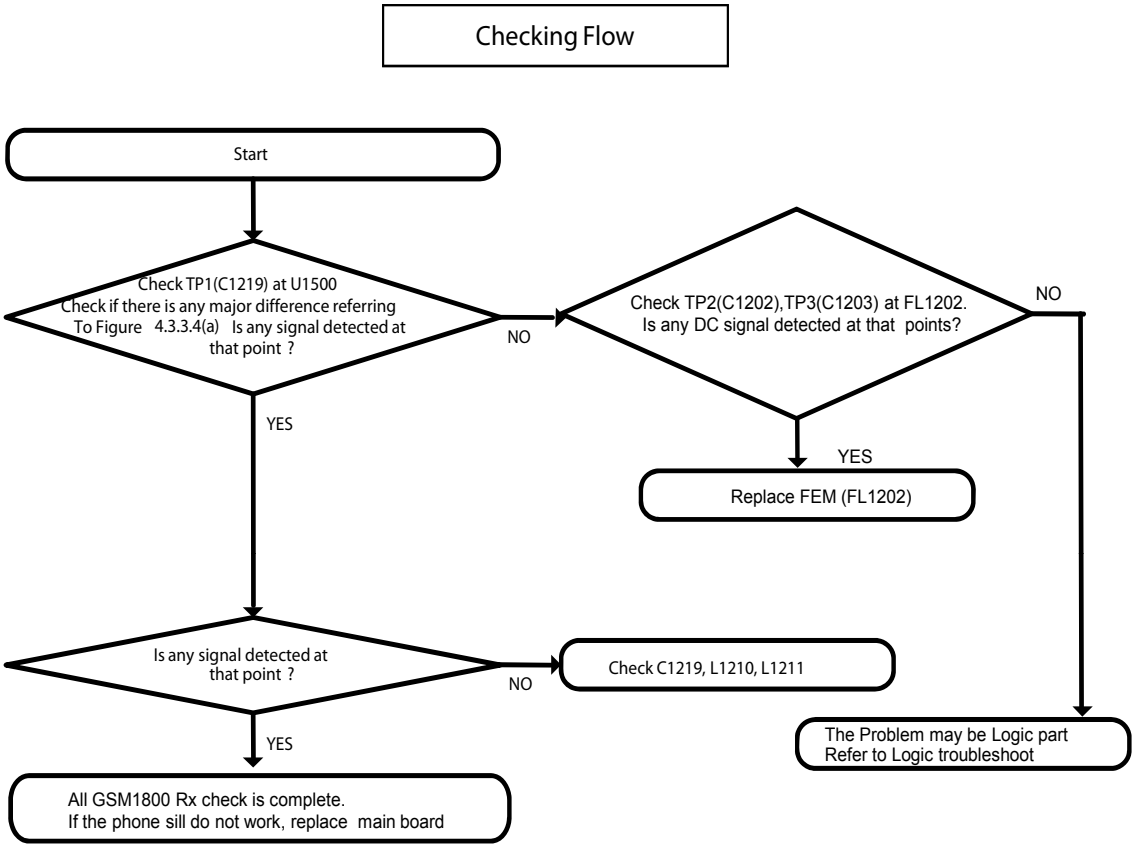

3.3.3.4 Checking RF Signal Path (FEM)

Test Point

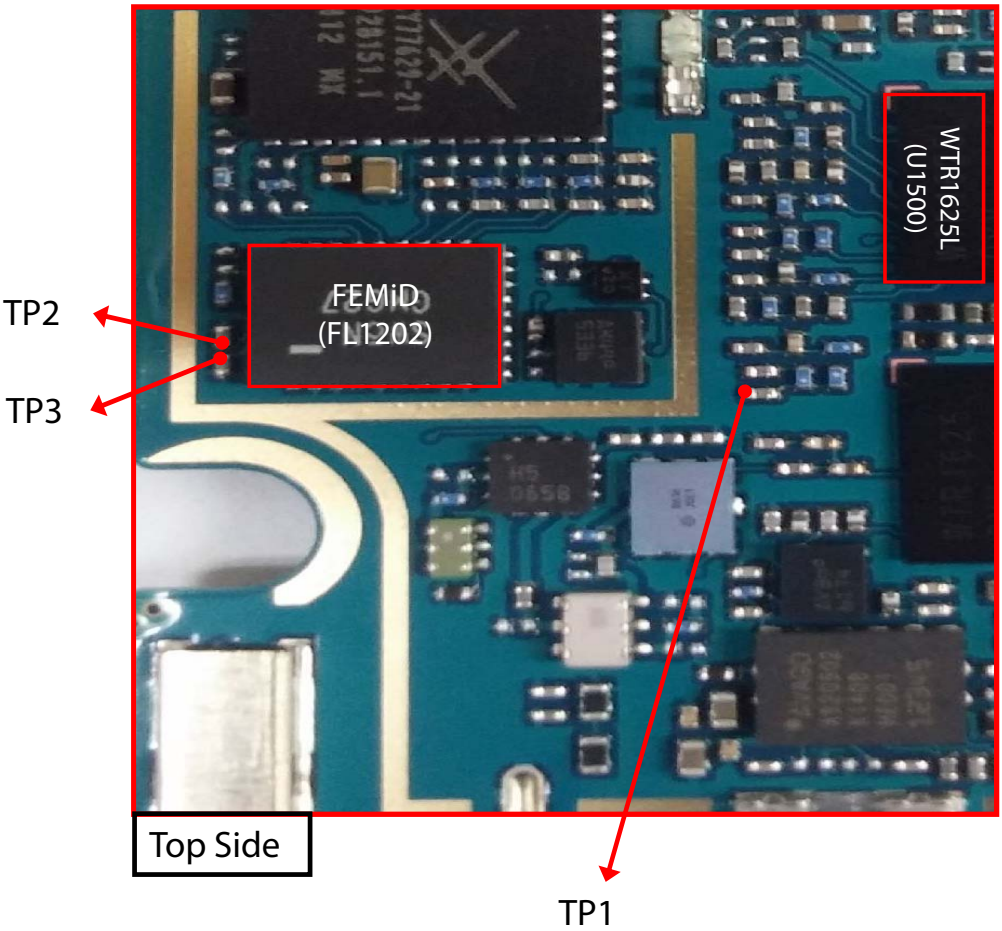

3.3.3.4 Checking RF Signal Path (FEM)

Circuit Diagram

B3 PRX, G1800

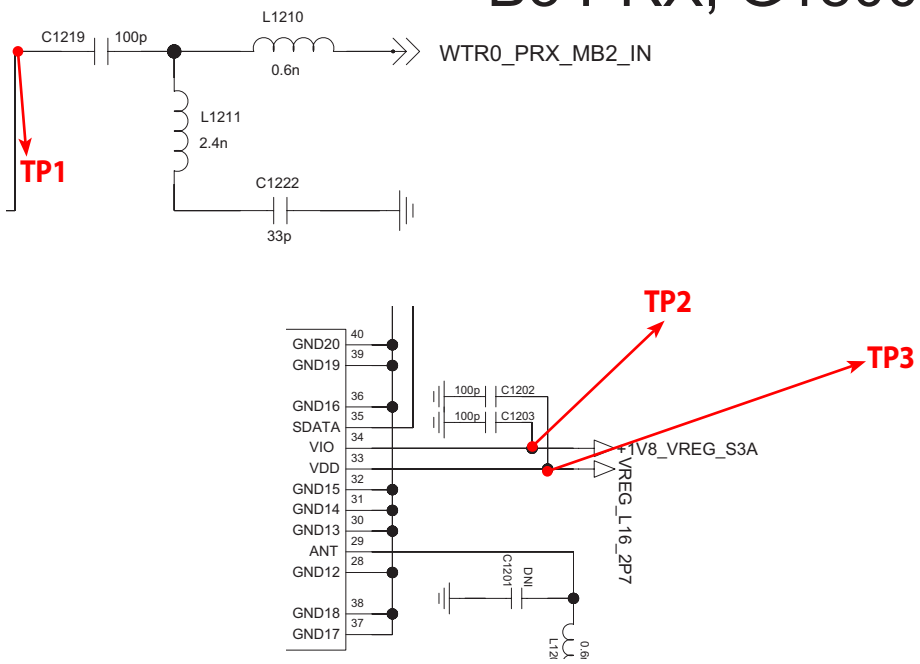

Waveform

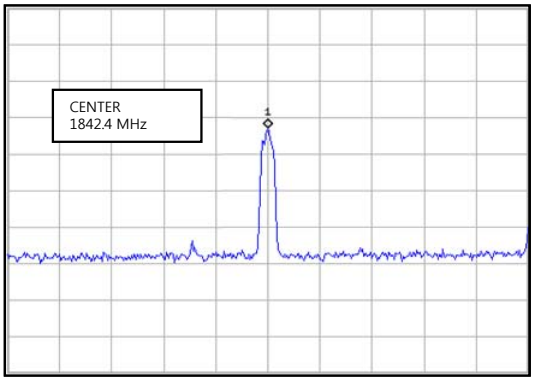

Figure 3.3.3.4 (a)

3.3.4 GSM 1900 Rx

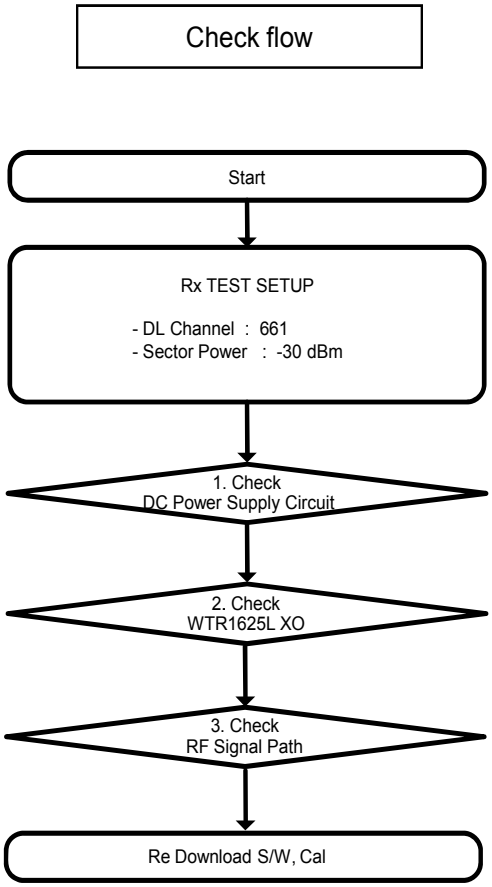

※ There are no Test Points on the IQ Data Line. So It is impossible to check the IQ Data Wave Form.

3.3.4 GSM 1900 Rx

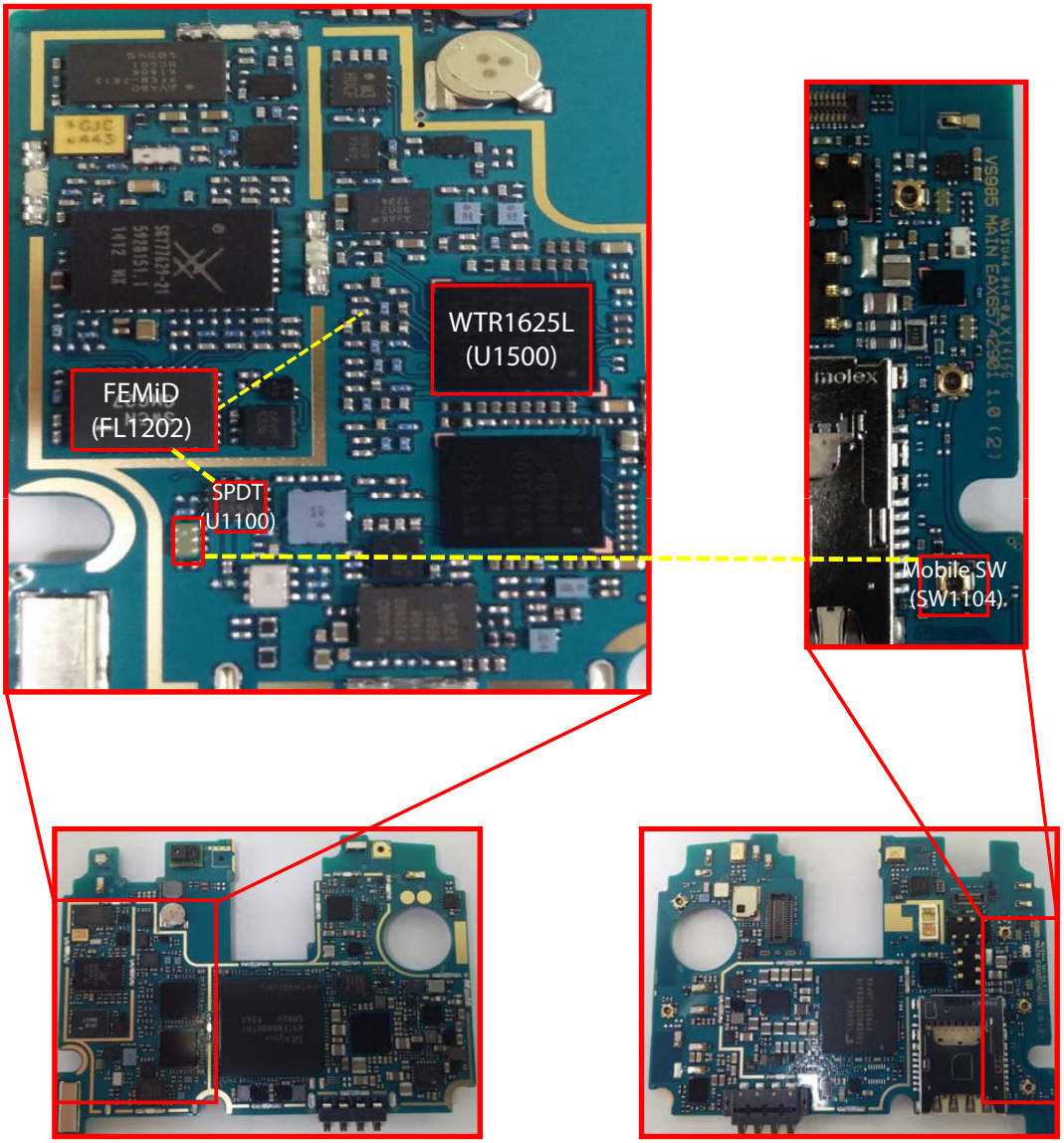

< AS985 _Main PCB_Top>

< AS985 _Main PCB_Bottom>

3.3.4.1 Checking DC Power Supply Circuit

Checking Flow

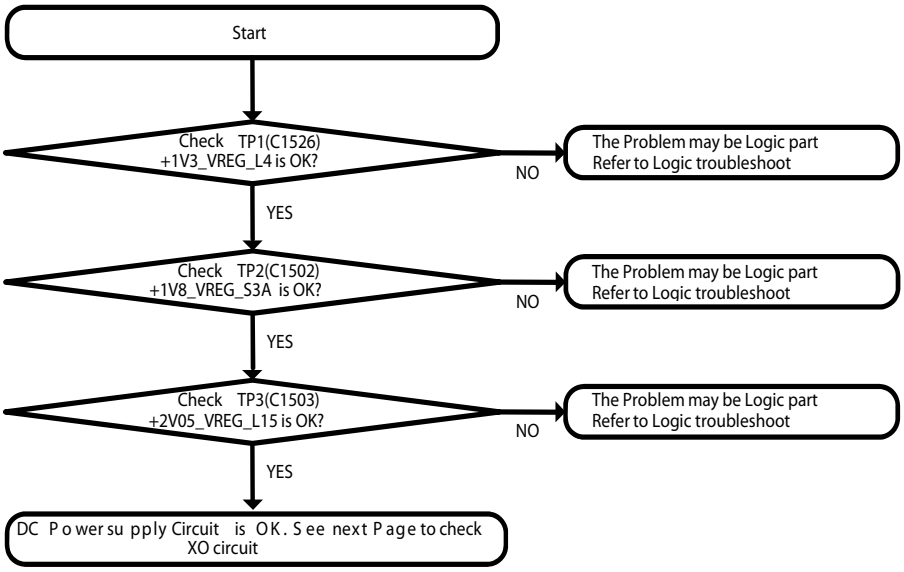

3.3.4.1 Checking DC Power Supply Circuit

Test Point

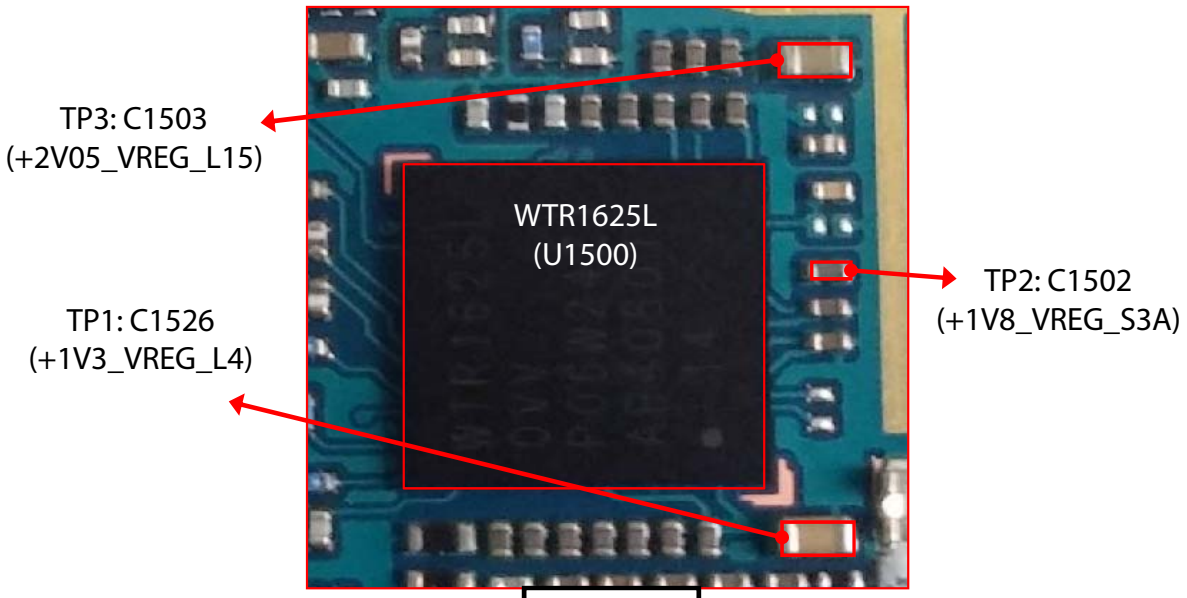

Top Side

Circuit Diagram

+1V3V_VREG_L4 / +1V8_VREG_S3A / +2V05_VREG_L15

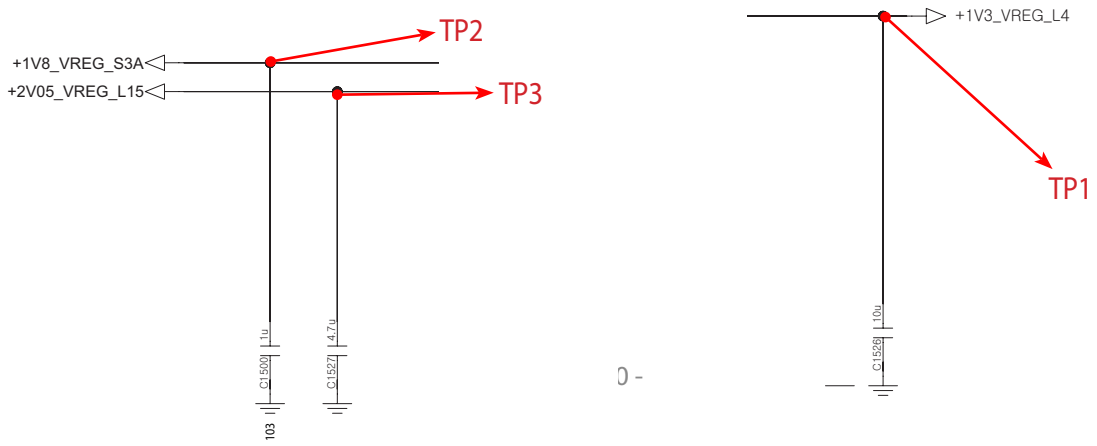

3.3.4.2 Checking WTR1625L XO Circuit

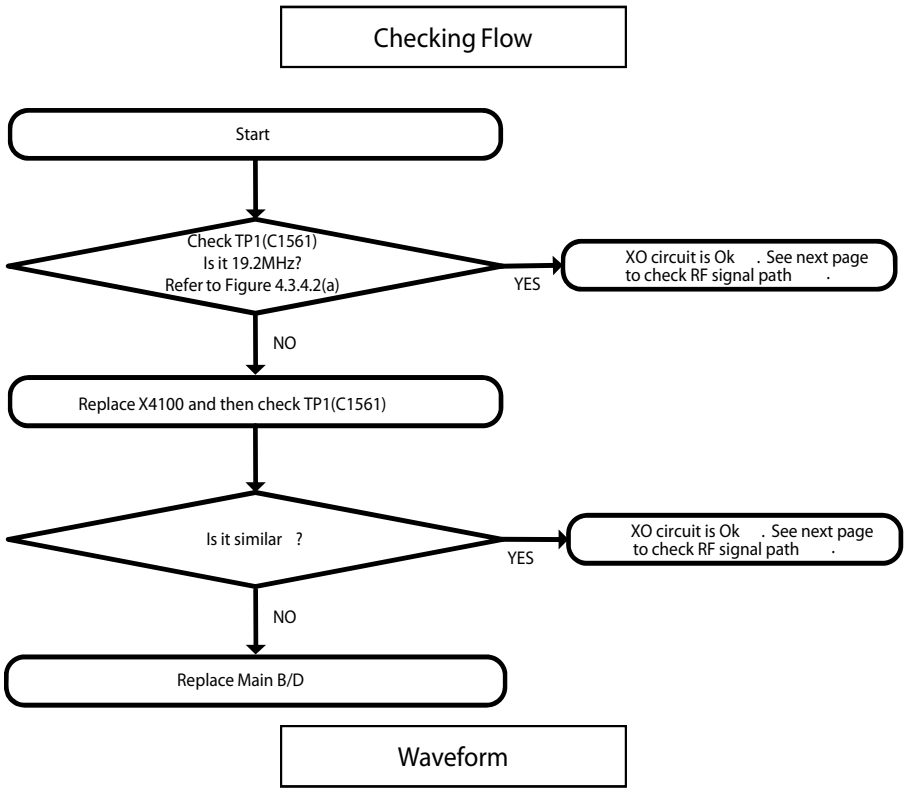

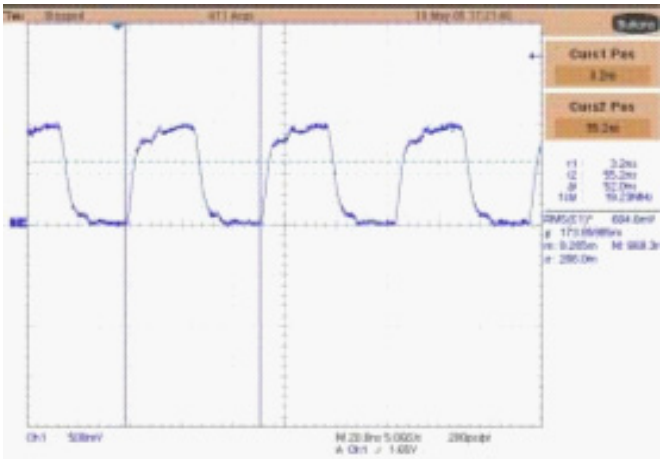

Figure 3.3.4.2 (a)

3.3.4.2 Checking WTR1625L XO Circuit

Test Point

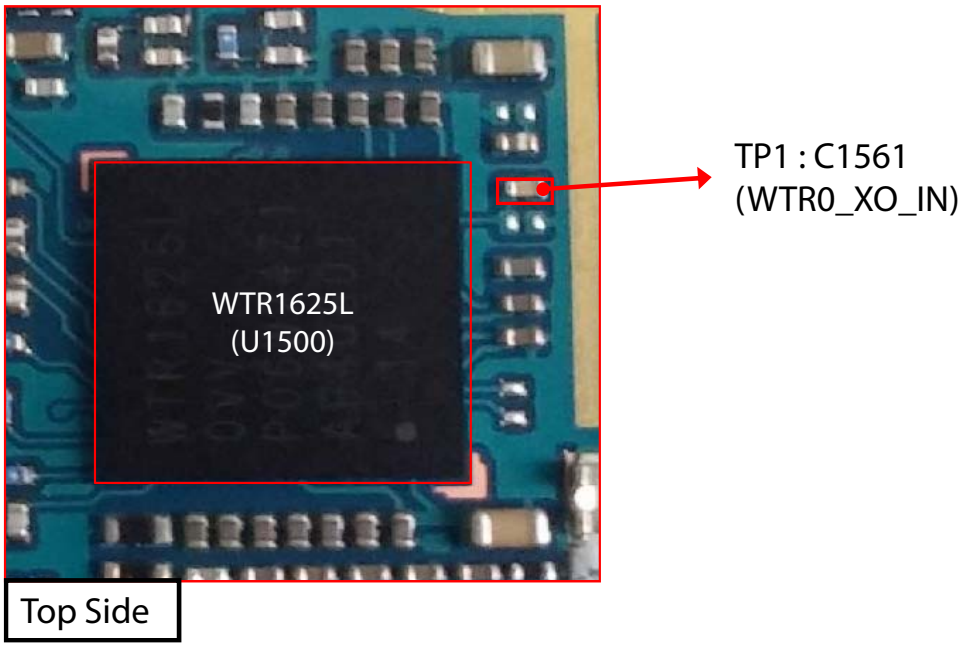

Circuit Diagram

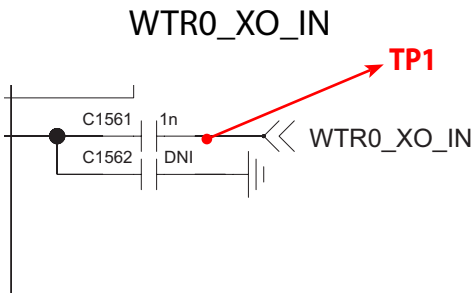

3.3.4.3 Checking RF Signal Path (SPDT)

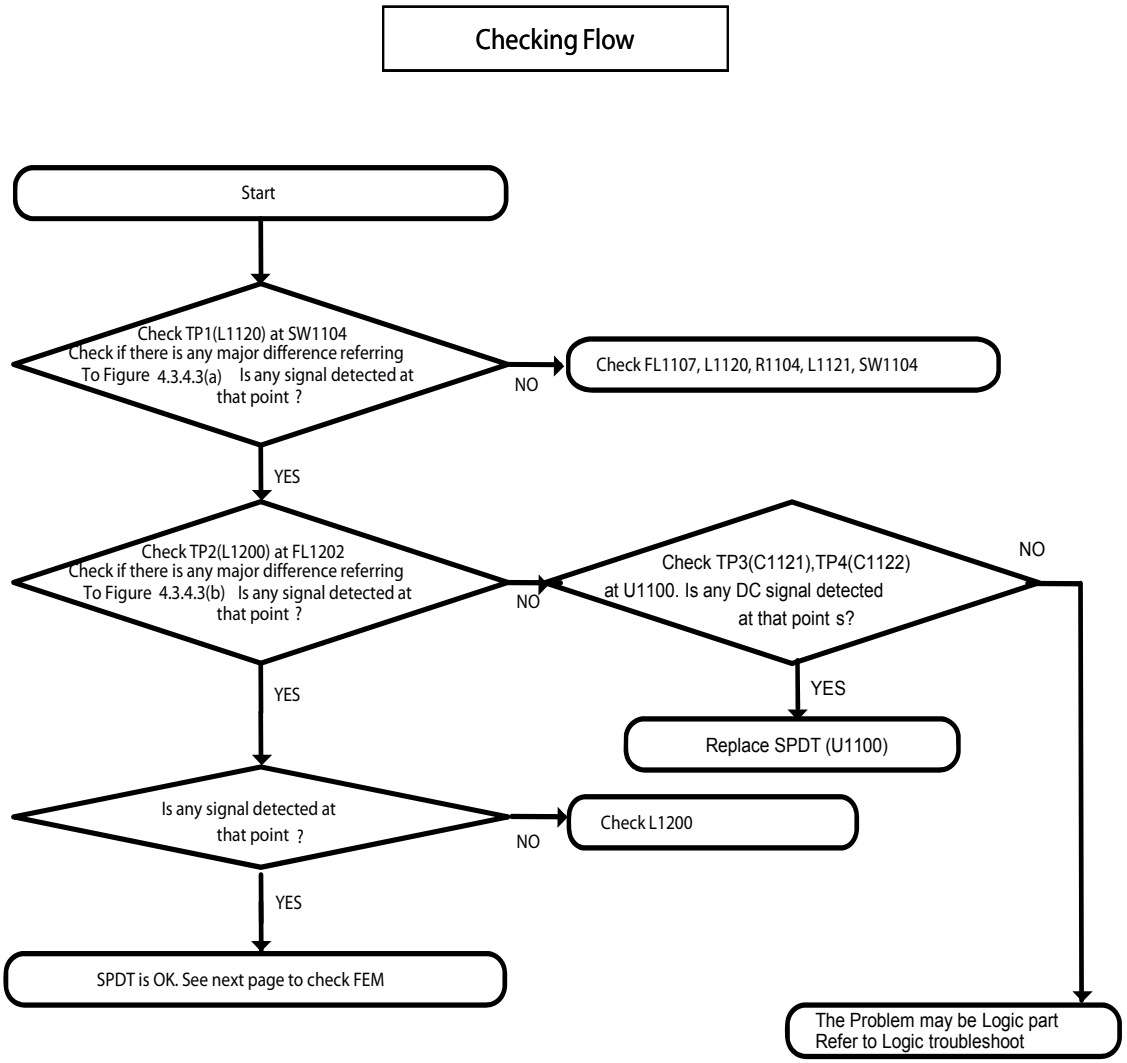

3.3.4.3 Checking RF Signal Path (SPDT)

Test Point

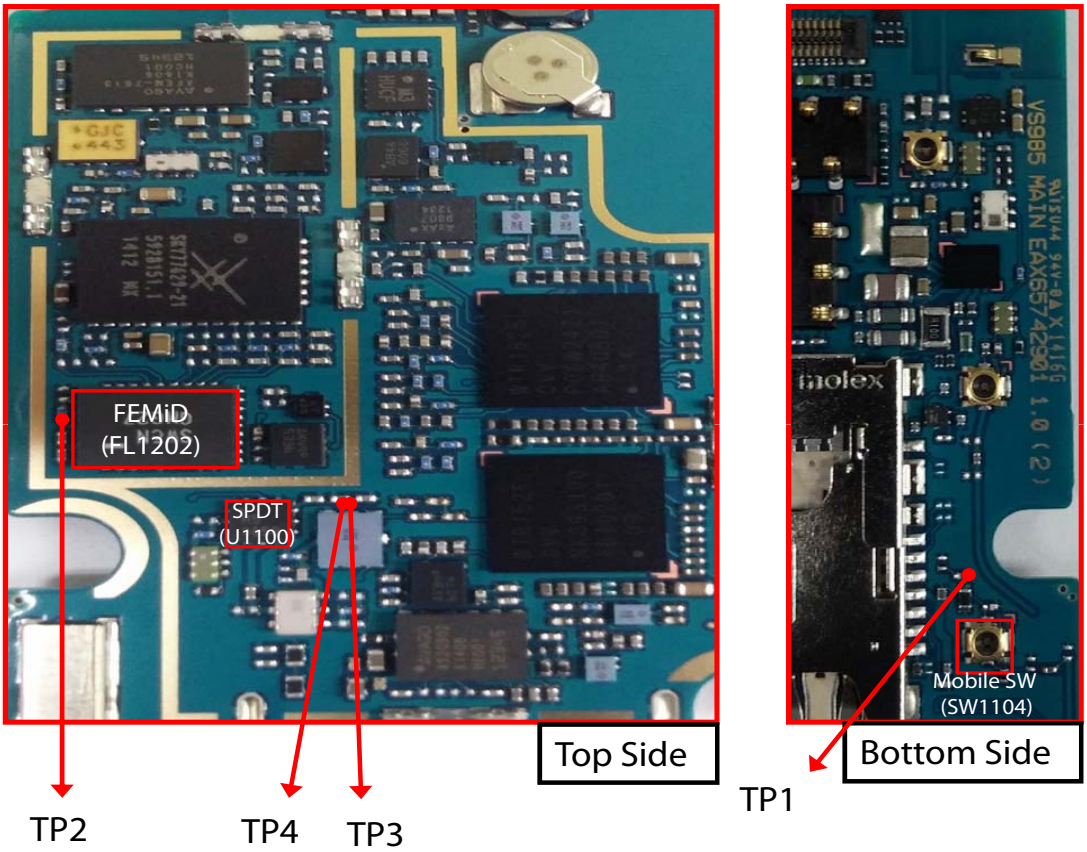

3.3.4.3 Checking RF Signal Path (SPDT)

Circuit Diagram

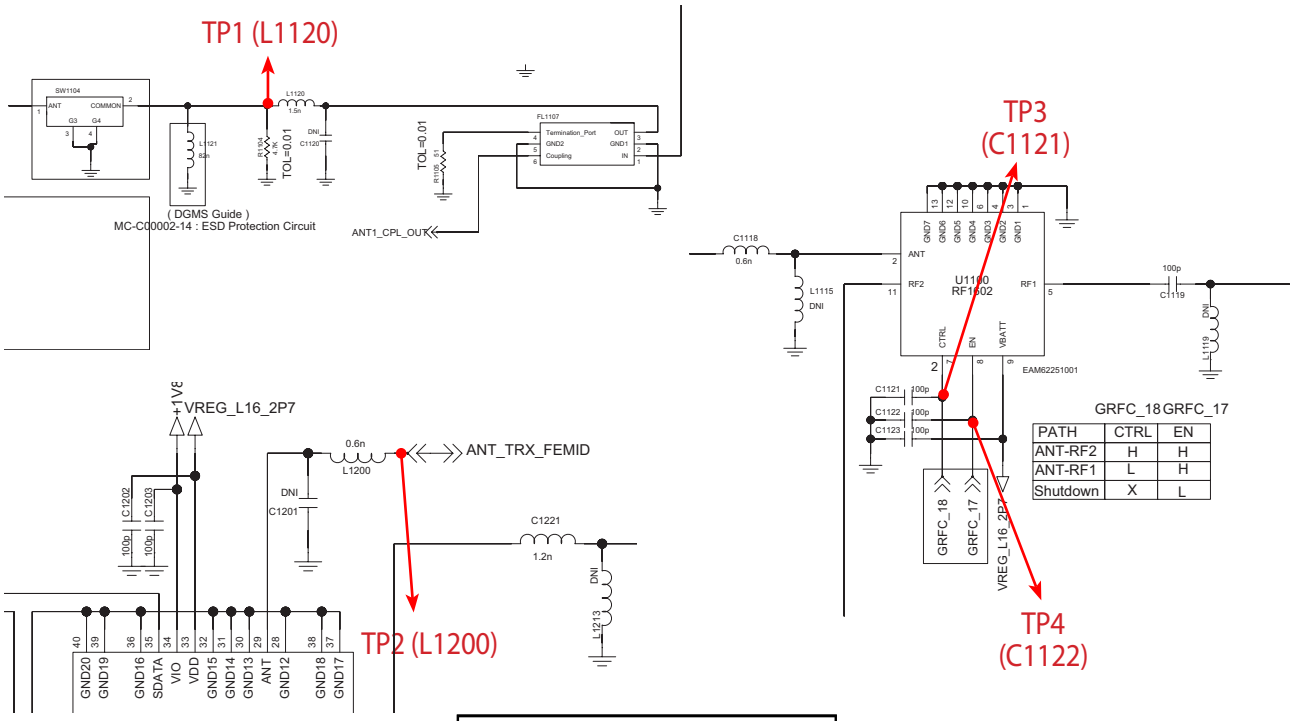

Waveform

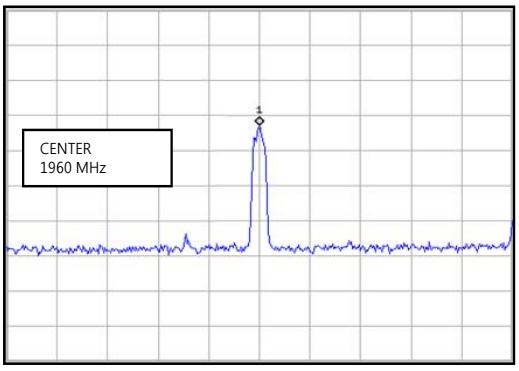

Figure 3.3.4.3 (a)

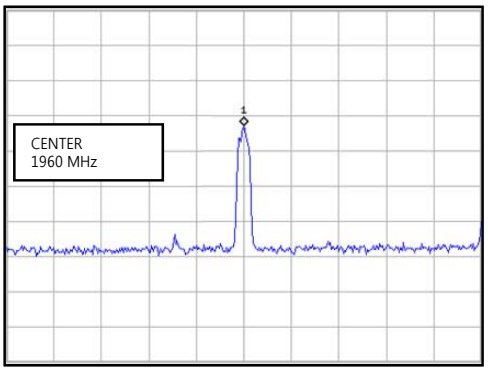

Figure 3.3.4.3 (b)

3.3.4.4 Checking RF Signal Path (FEM)

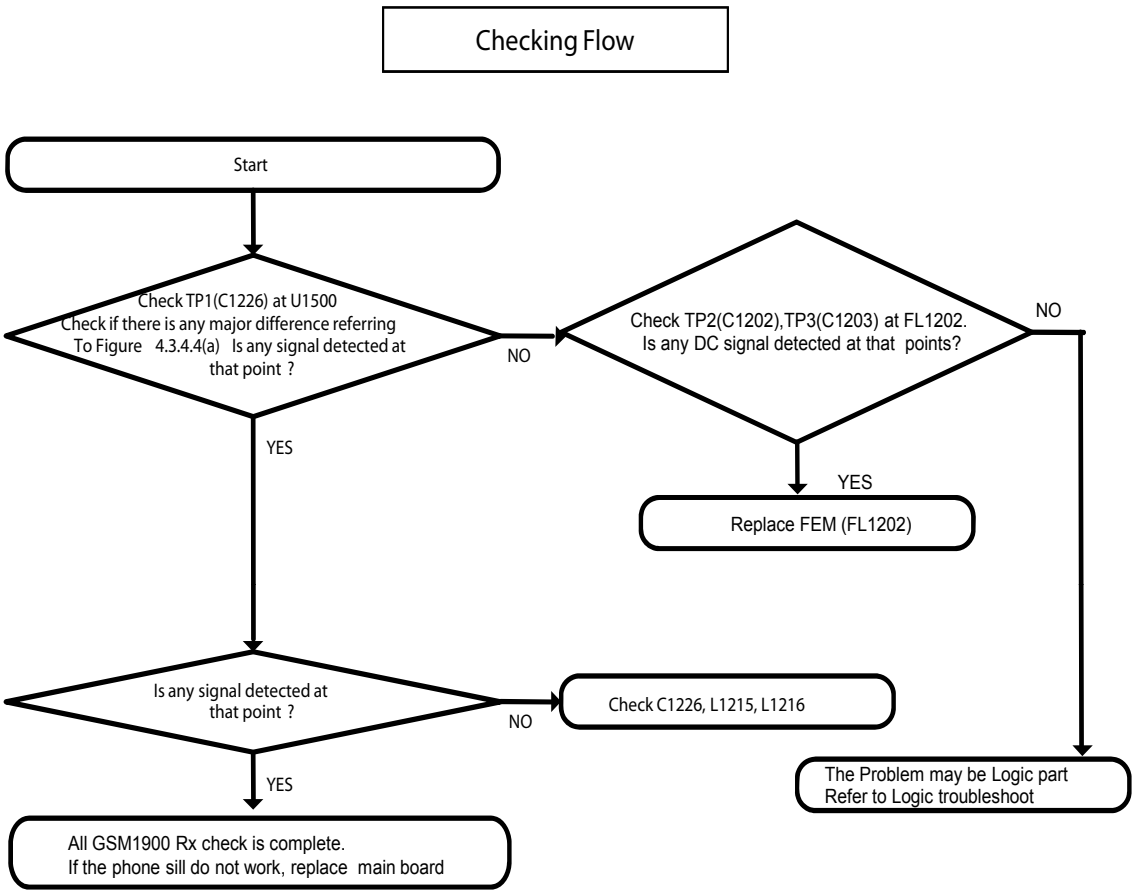

3.3.4.4 Checking RF Signal Path (FEM)

Test Point

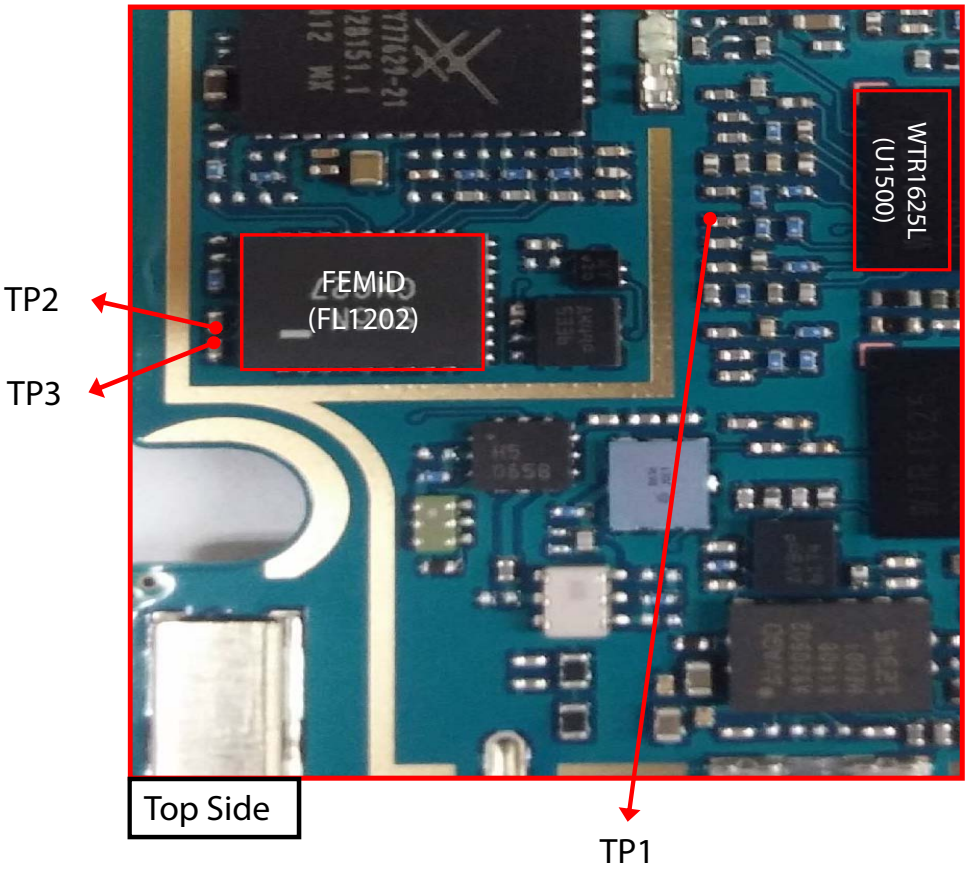

3.3.4.4 Checking RF Signal Path (FEM)

Circuit Diagram

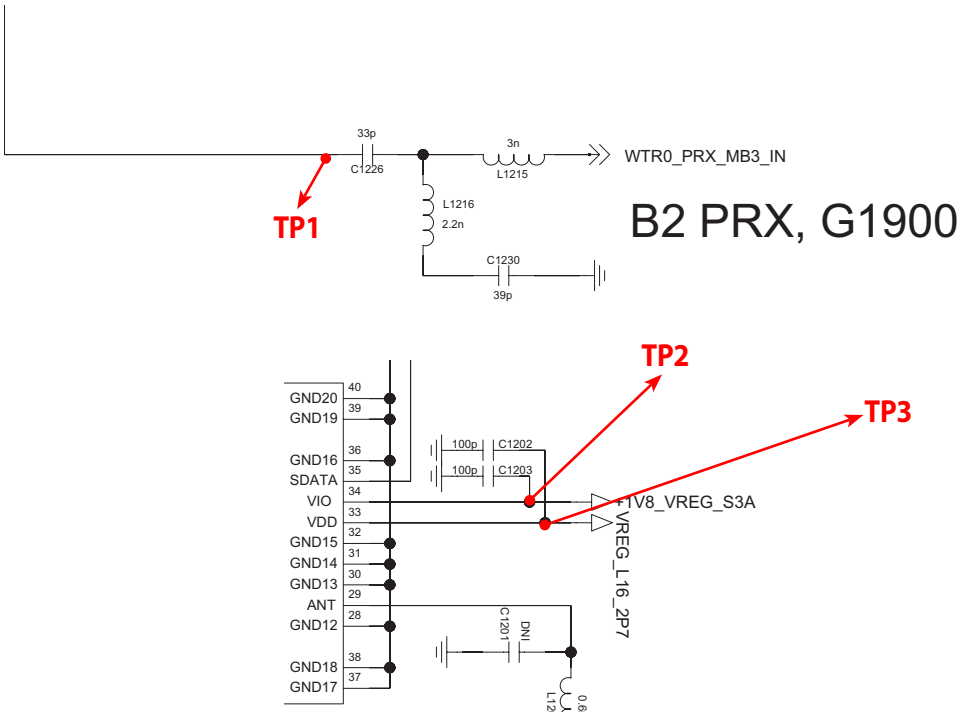

Waveform

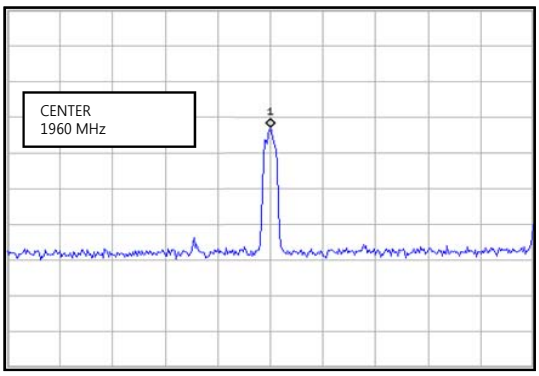

Figure 3.3.4.4 (a)

3.4 GSM Tx Part Trouble

3.4.1 GSM 850 Tx

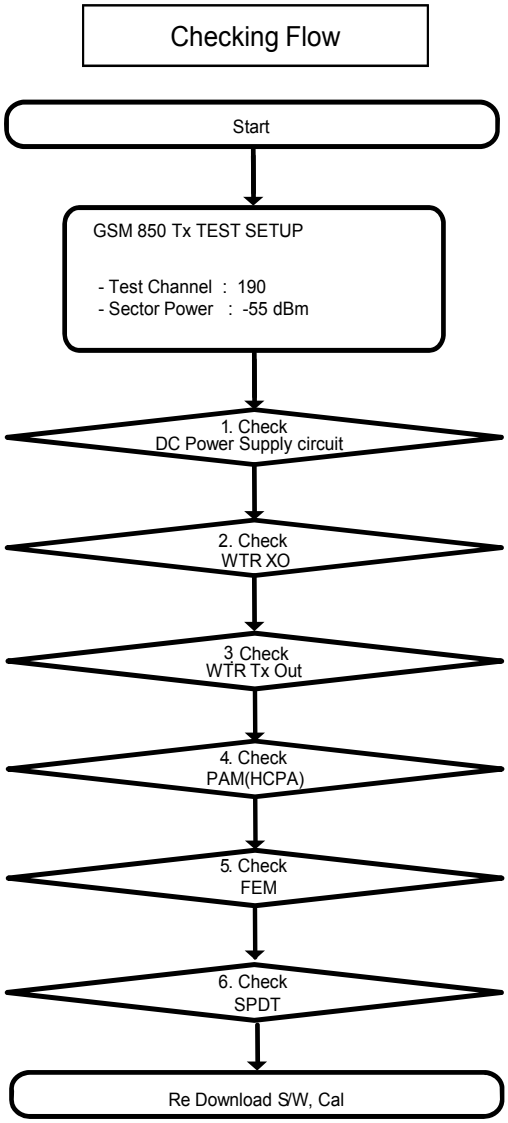

※ There are no Test Points on the IQ Data Line. So It is impossible to check the IQ Data Wave Form

3.4.1 GSM 850 Tx

GSM 850 TX RF PATH

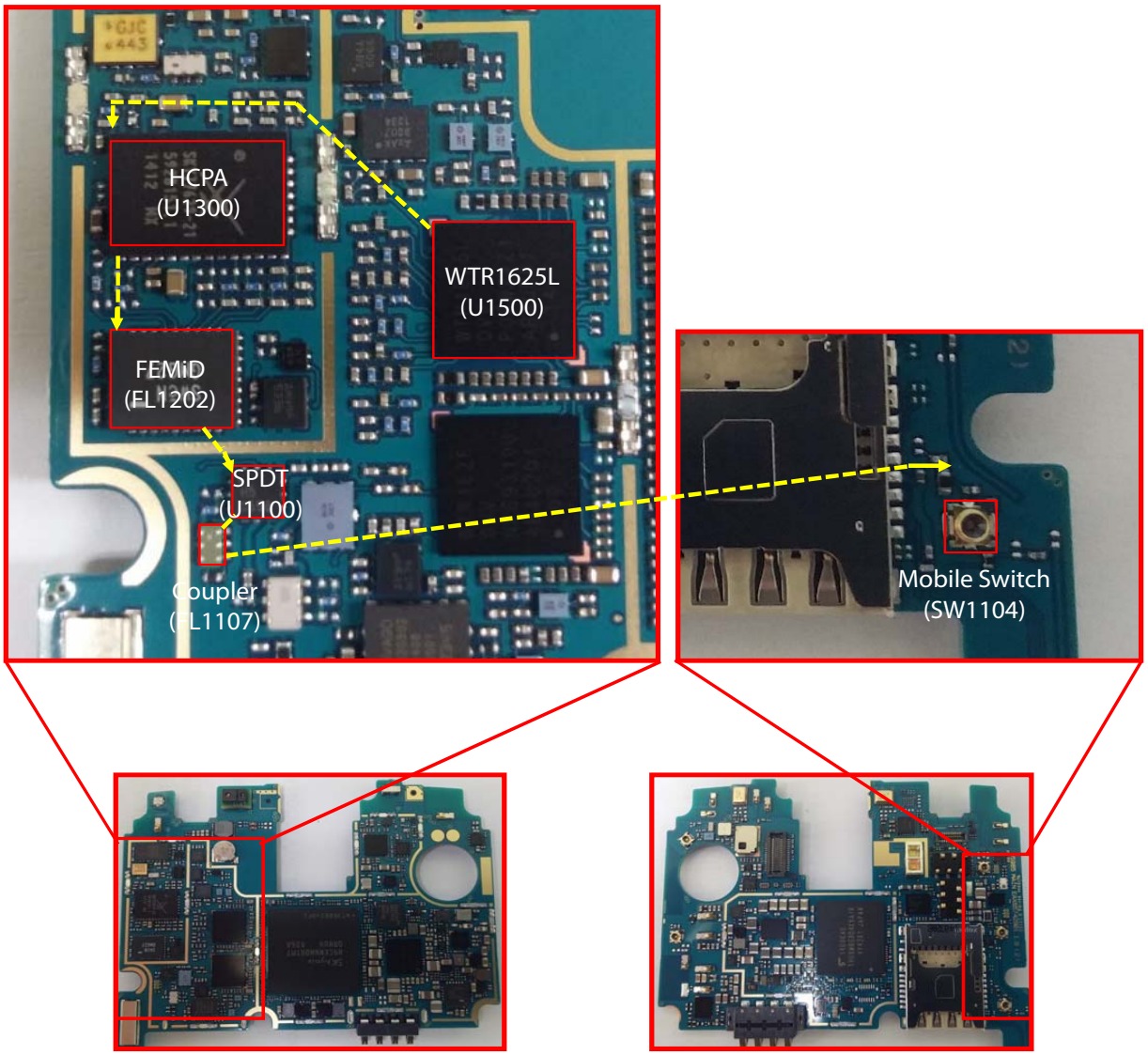

< AS985 _Main PCB_Top>

< AS985 _Main PCB_Bottom>

3.4.1.1 Checking DC Power Supply Circuit

Checking Flow

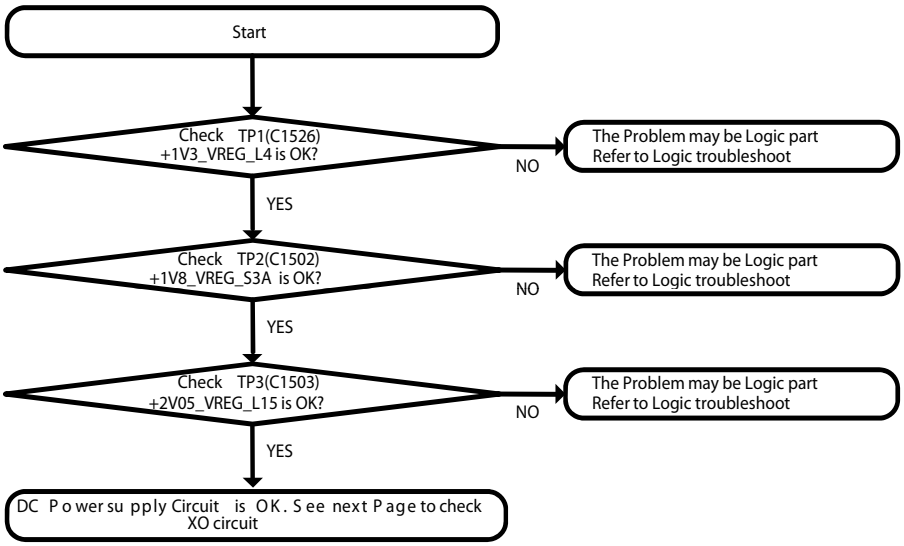

3.4.1.1 Checking DC Power Supply Circuit

Test Point

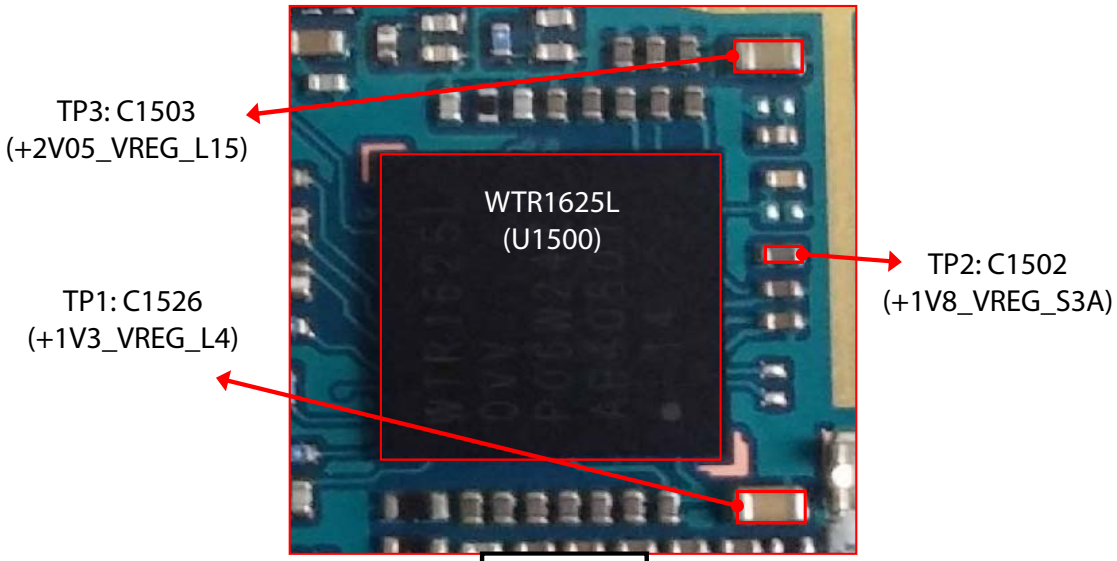

Top Side

Circuit Diagram

+1V3V_VREG_L4 / +1V8_VREG_S3A / +2V05_VREG_L15

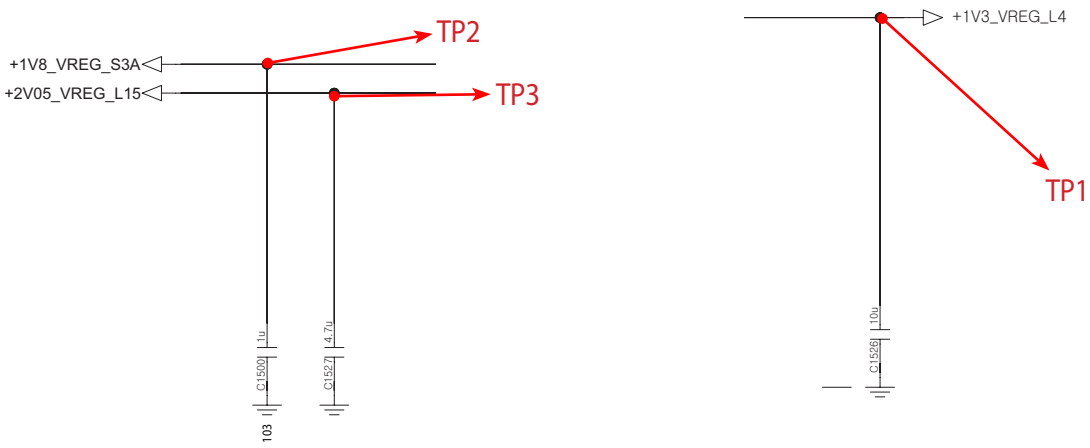

3.4.1.2 Checking WTR1625L XO Circuit

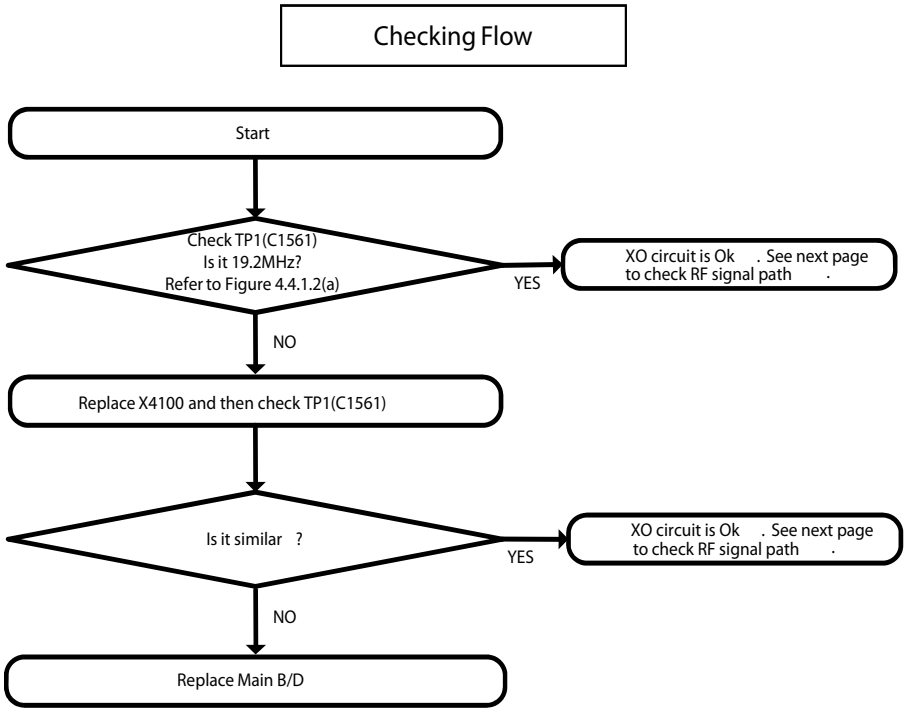

Waveform

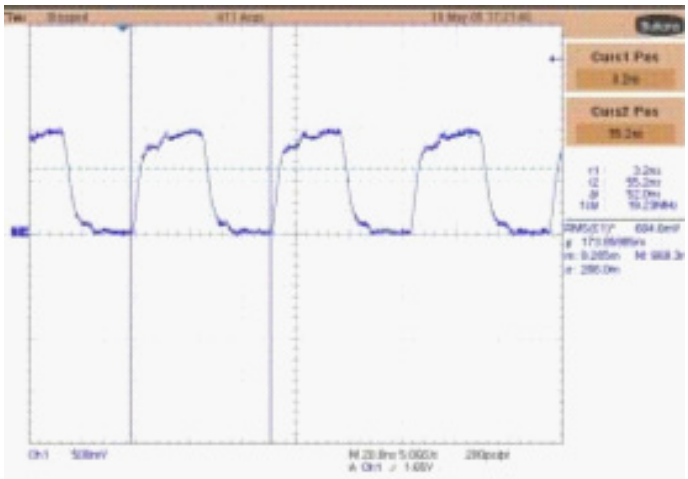

Figure 3.4.1.2 (a)

3.4.1.2 Checking WTR1625L XO Circuit

Test Point

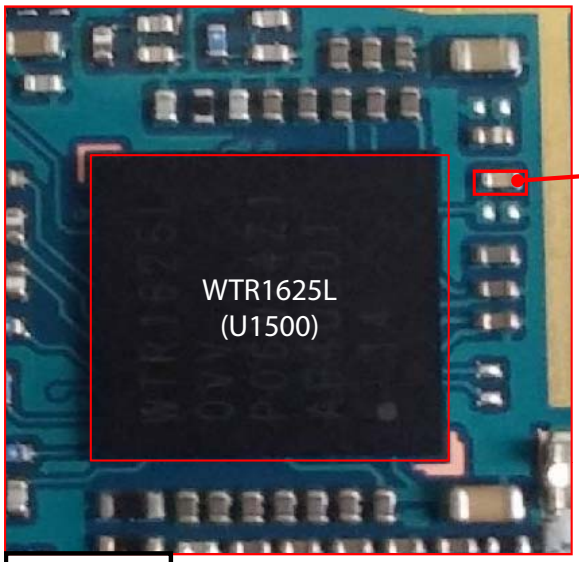

TP1 : C1561
(WTR0_XO_IN)

Top Side

Circuit Diagram

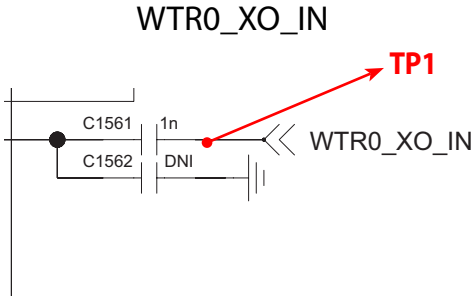

3.4.1.3 Checking WTR1625L TX Out Circuit

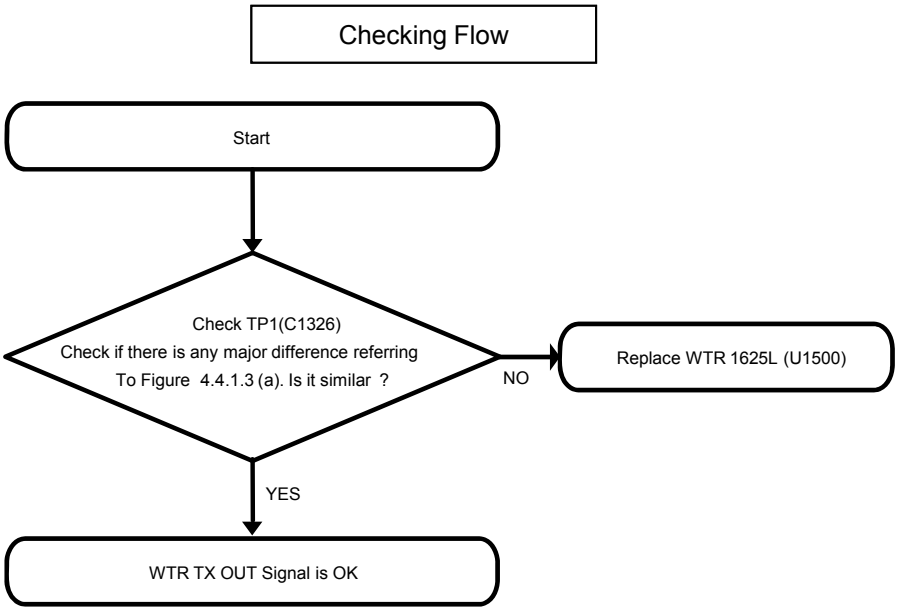

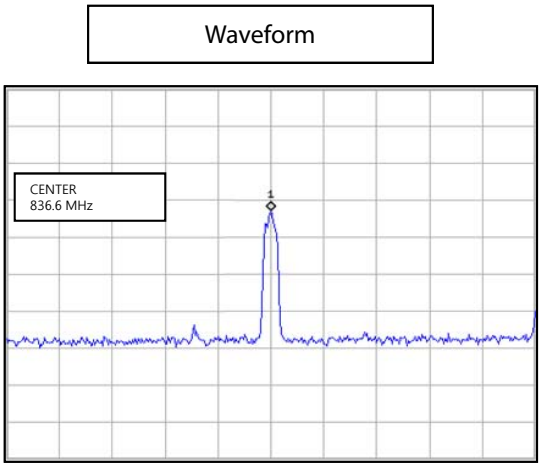

Figure 3.4.1.3 (a)

3.4.1.3 Checking WTR1625L TX Out circuit

Test Point

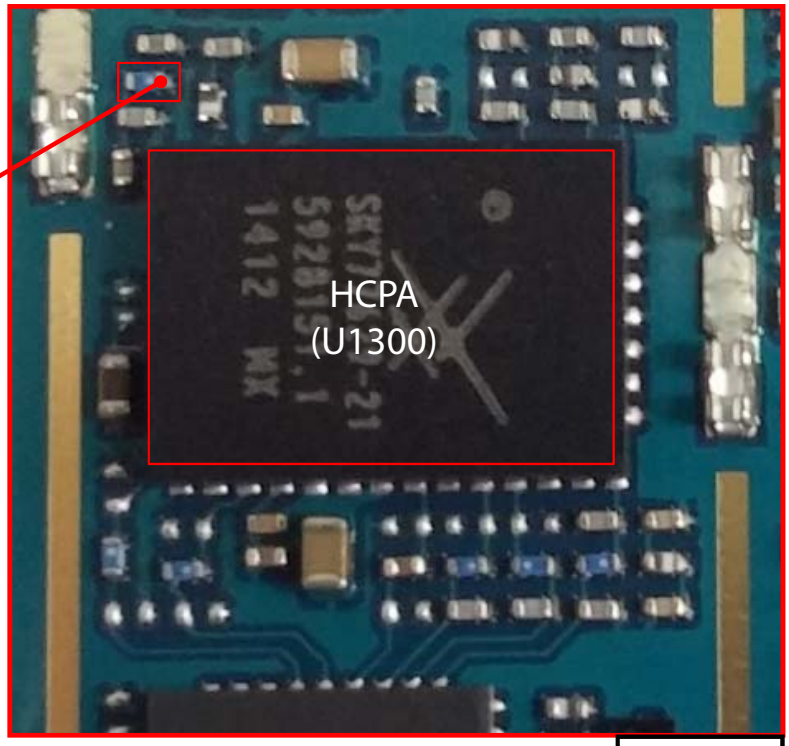

TP1 : C1326
(WTR0_TX_LB2_OUT

Top Side

Circuit Diagram

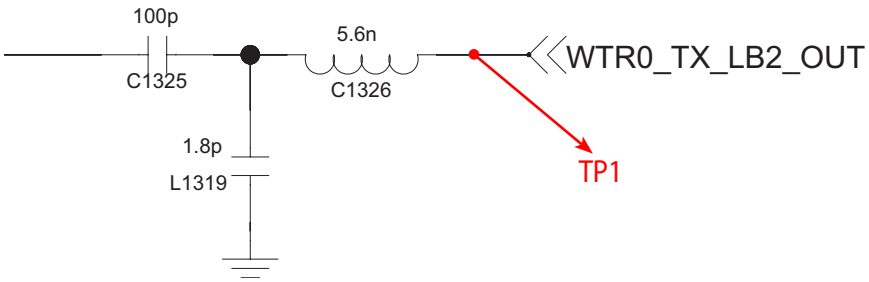

3.4.1.4 Check HCPA Circuit

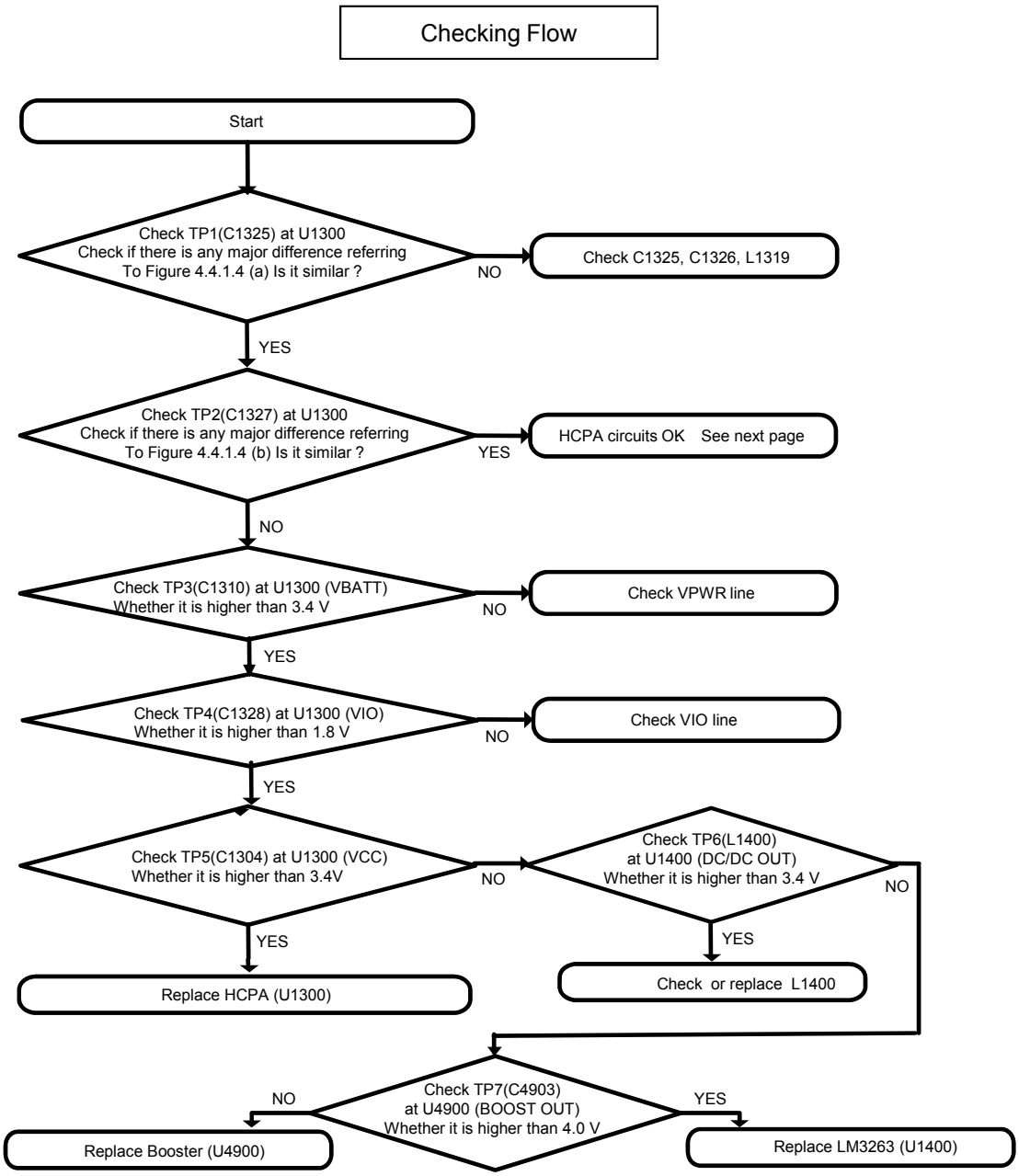

3.4.1.4 Check HCPA Circuit

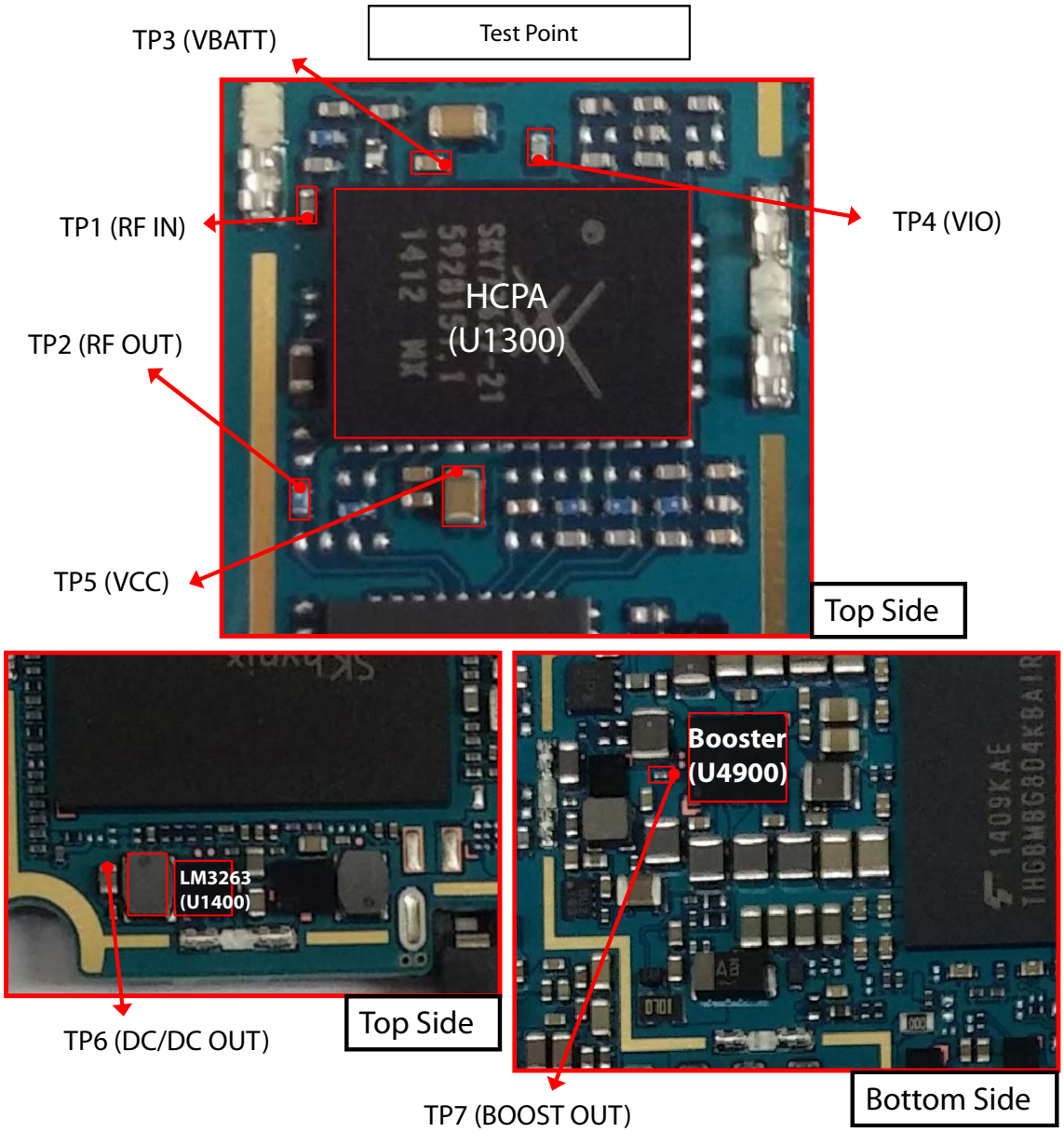

Circuit Diagram

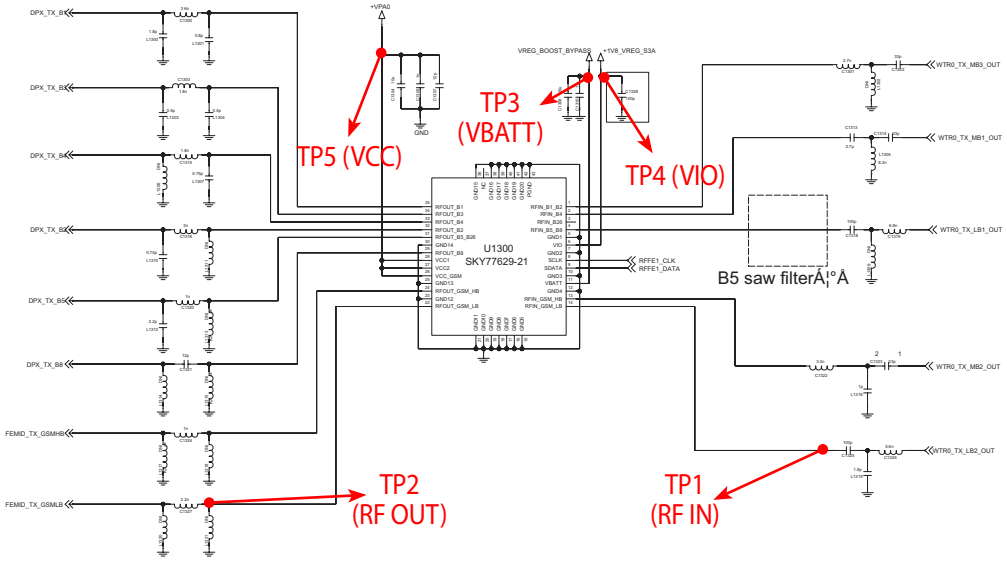

Global_LTE_APT_LM3263

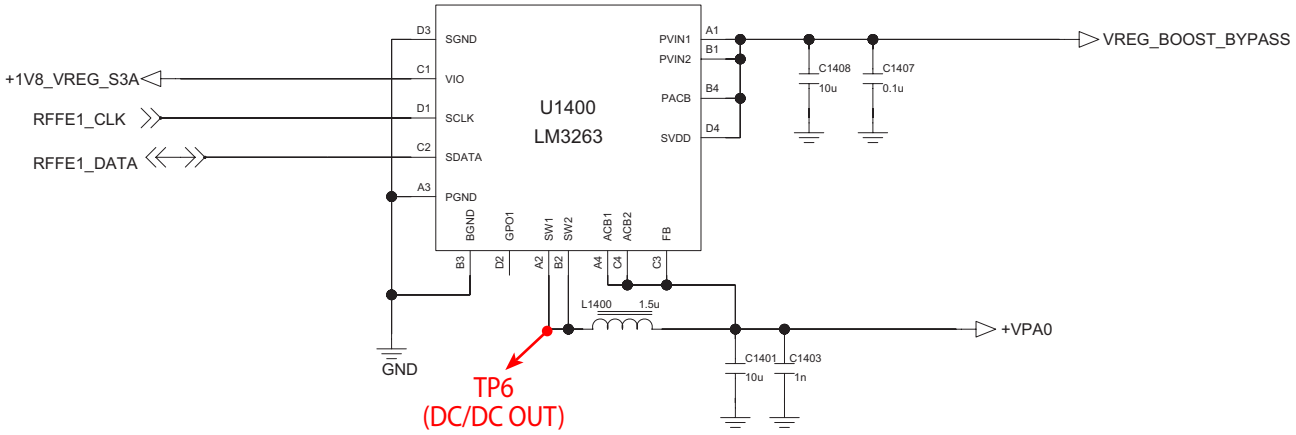

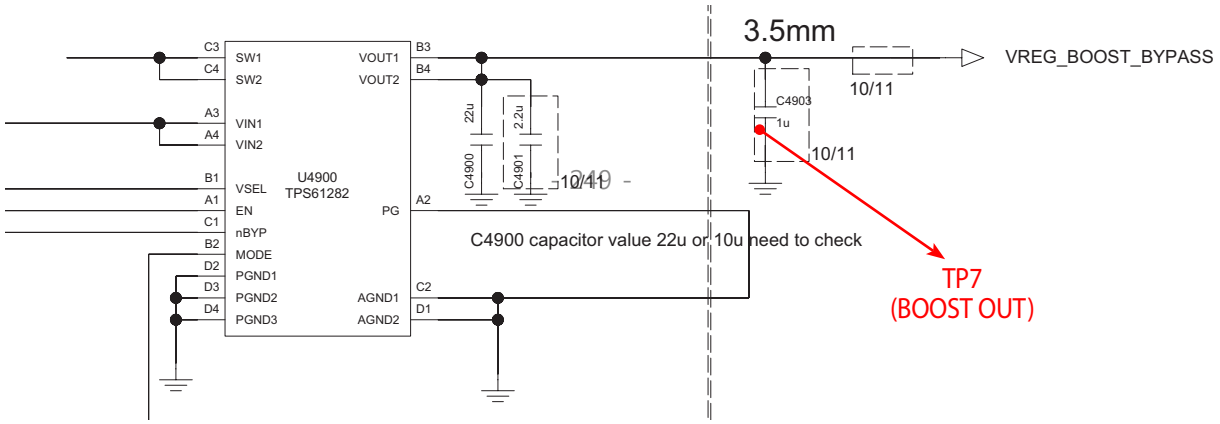

3.4.1.4 Check HCPA Circuit

Waveform

TP1

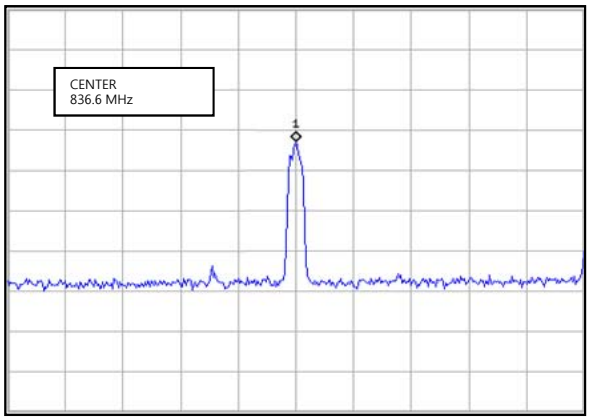

Figure 3.4.1.4(a)

TP2

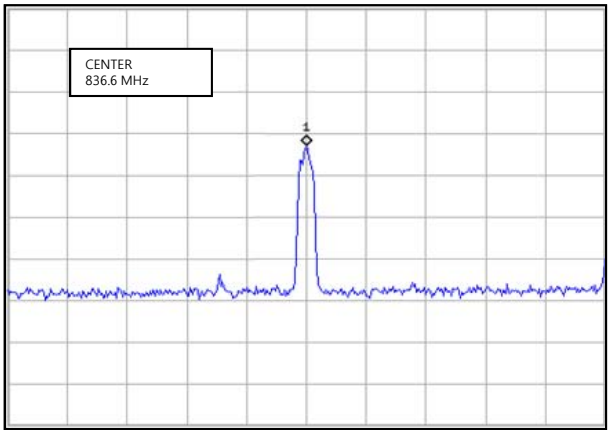

Figure 3.4.1.4 (b)

3.4.1.5 Checking RF Signal Path (FEM)

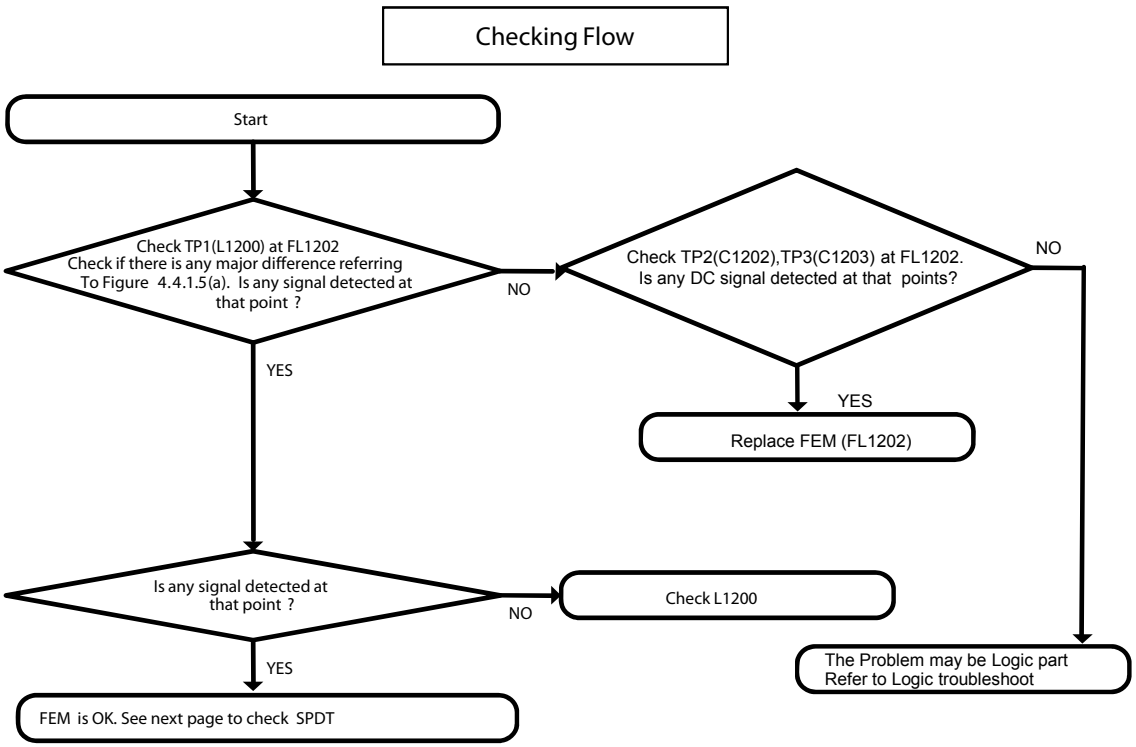

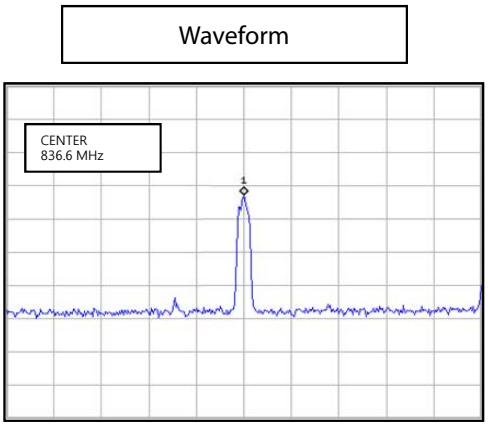

Figure 3.4.1.5 (b)

3.4.1.5 Checking RF Signal Path (FEM)

Test Point

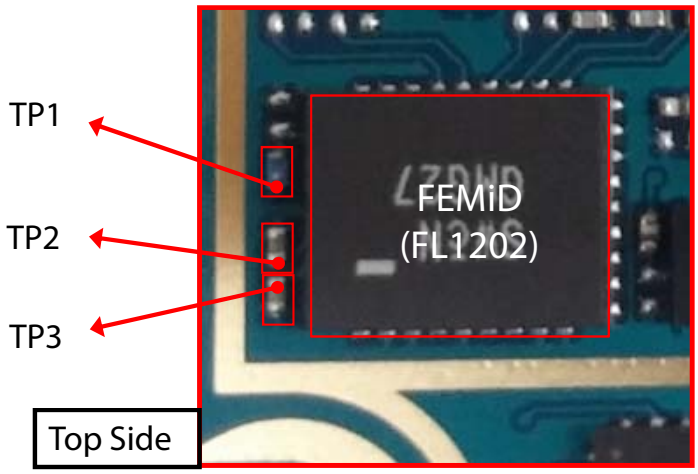

Circuit Diagram

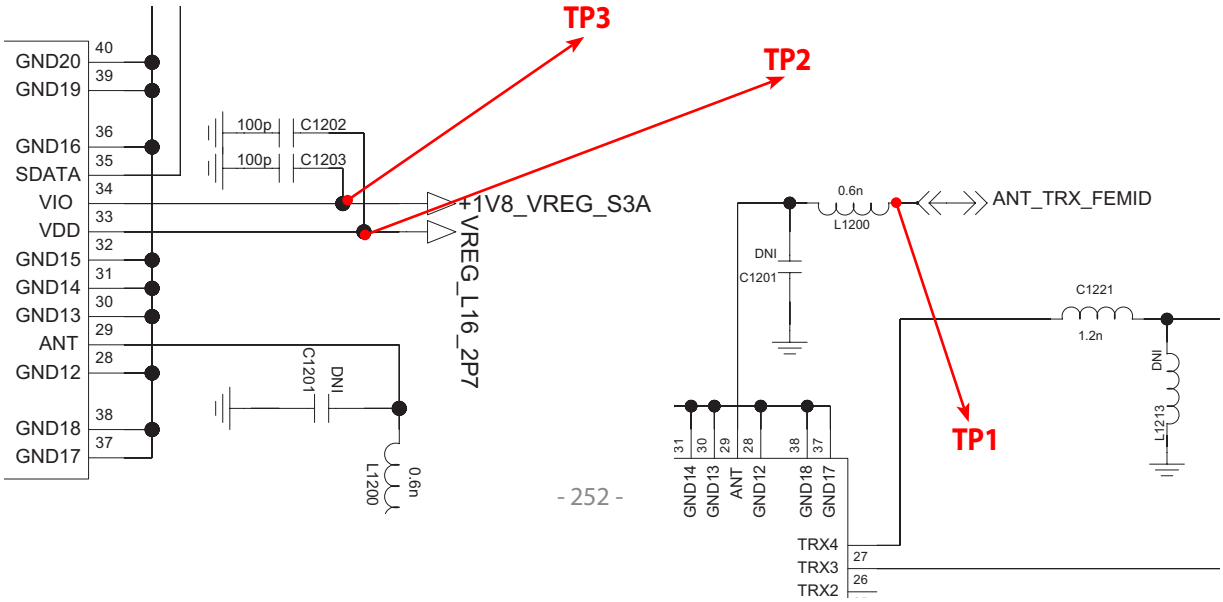

3.4.1.6 Checking RF Signal Path (SPDT)

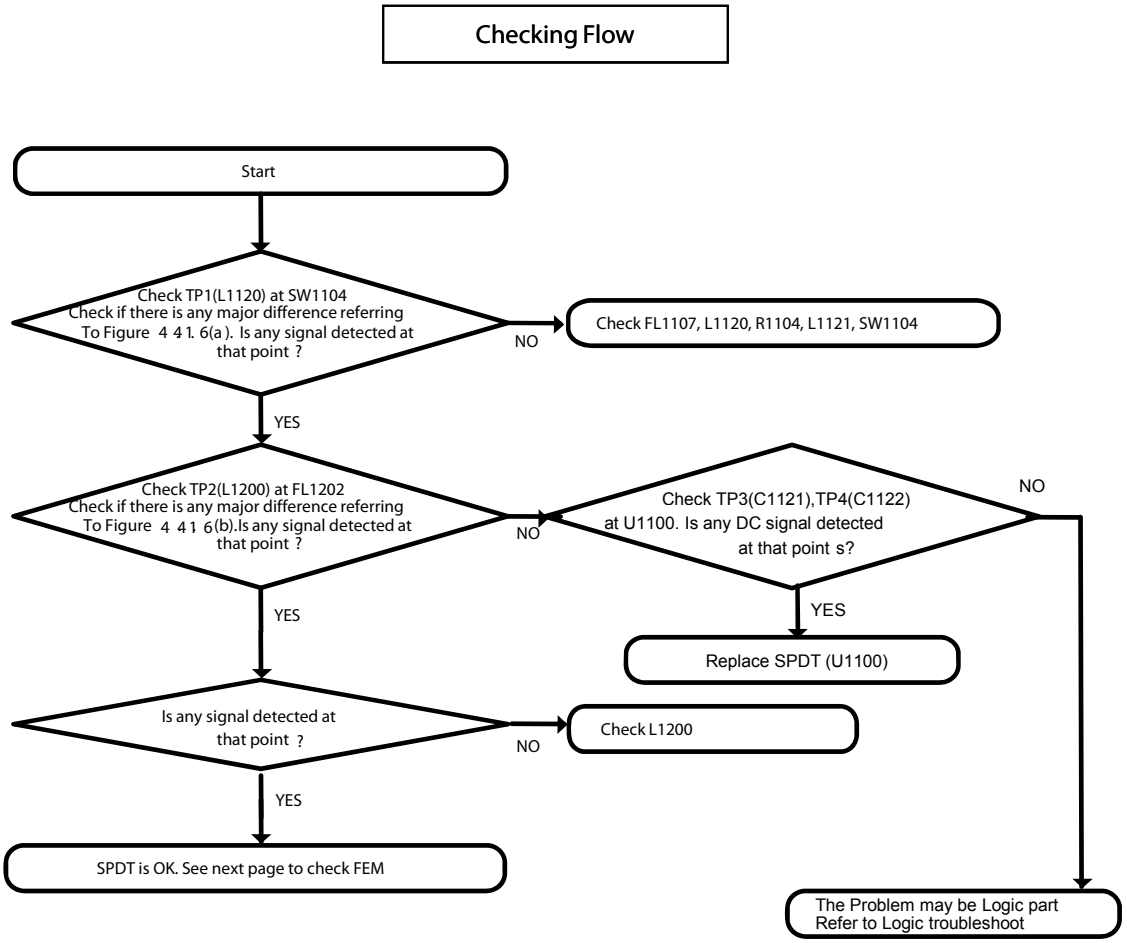

3.4.1.6 Checking RF Signal Path (SPDT)

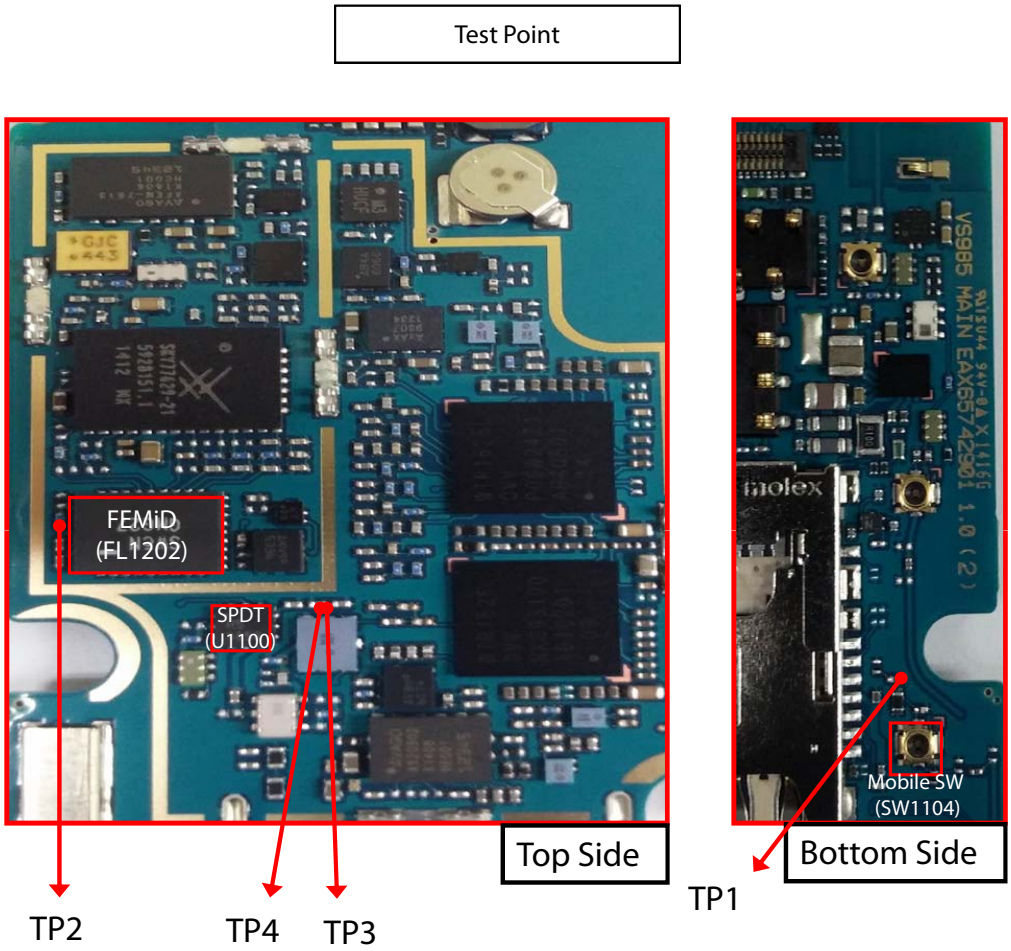

3.4.1.6 Checking RF Signal Path (SPDT)

Circuit Diagram

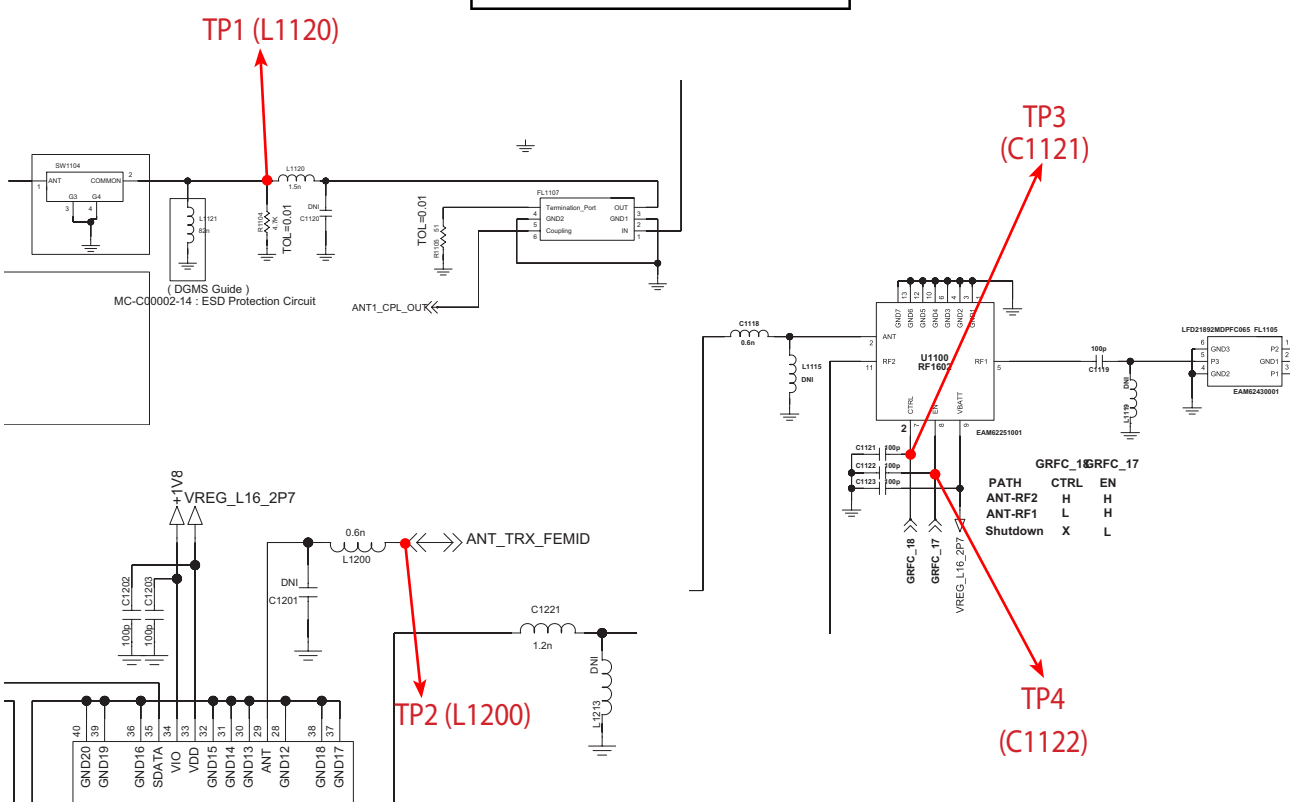

Waveform

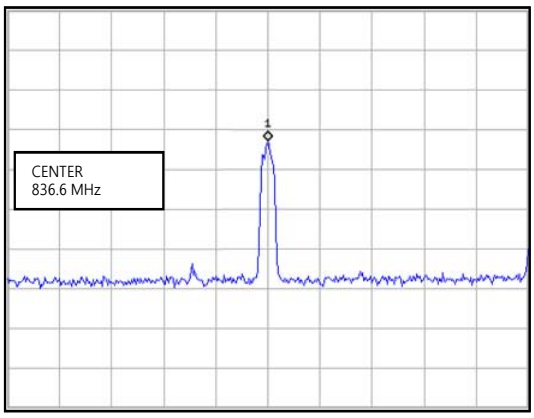

Figure 3.3.1.6 (a)

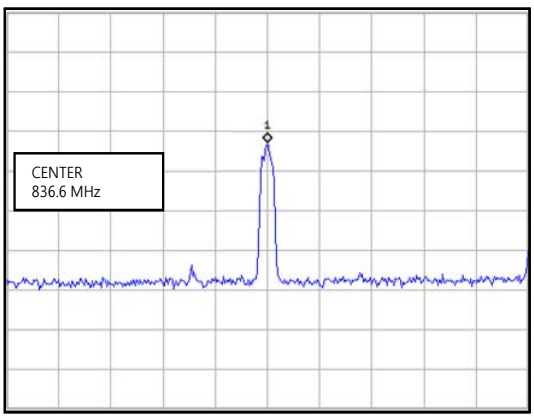

Figure 3.3.1.6 (b)

3.4.2 GSM 900 Tx

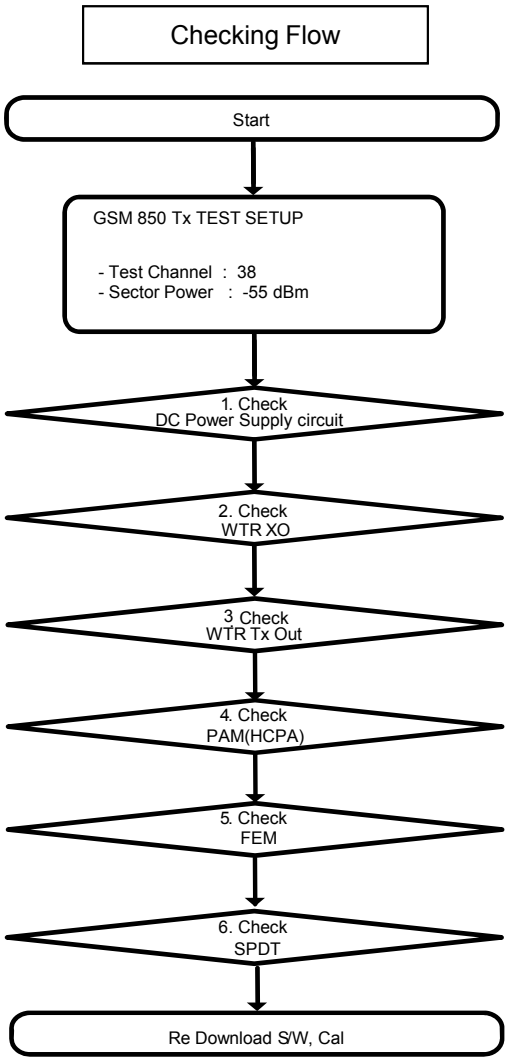

※ There are no Test Points on the IQ Data Line. So It is impossible to check the IQ Data Wave Form

3.4.2 GSM 900 Tx

GSM 900 TX RF PATH

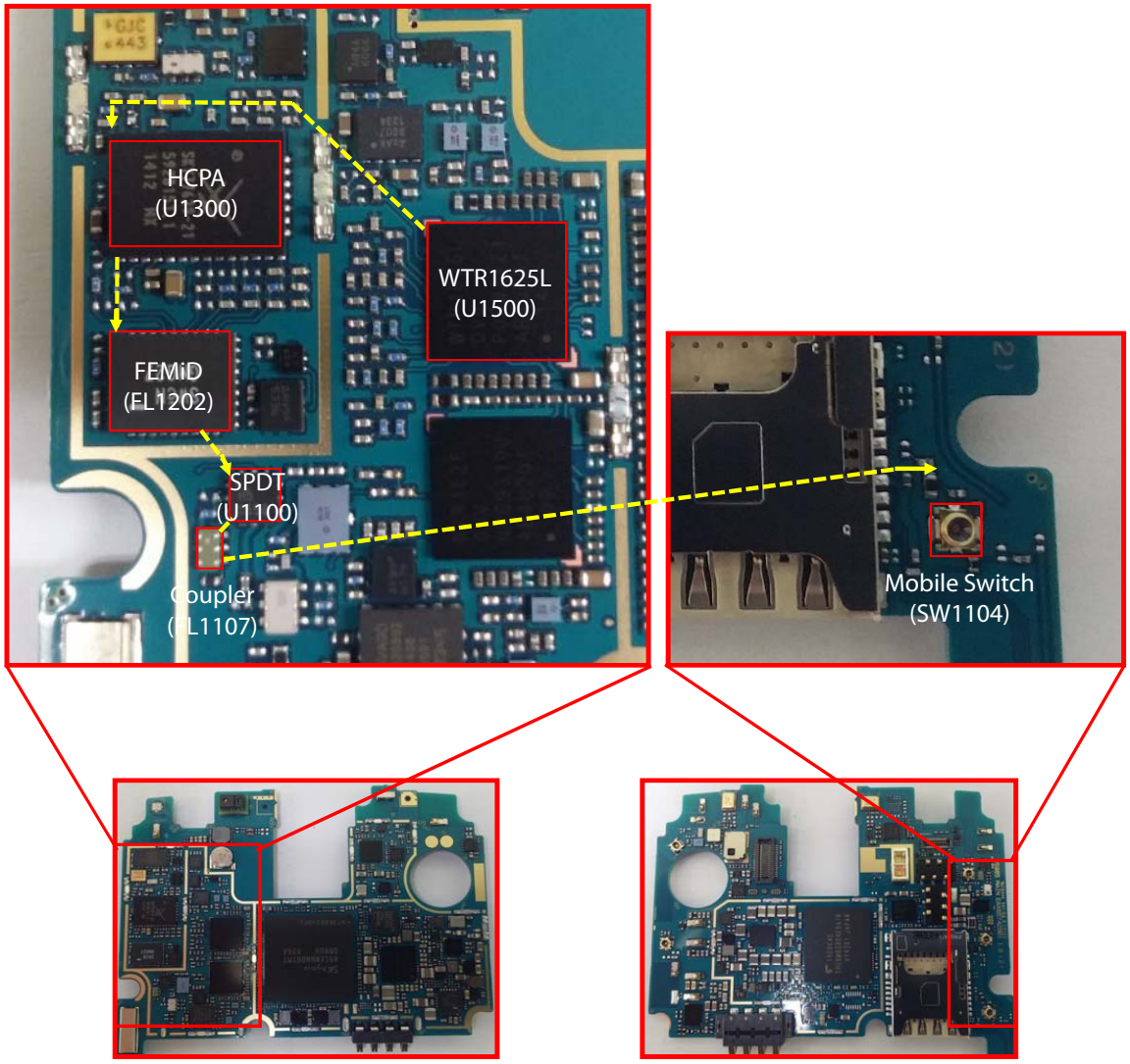

<AS985 _Main PCB_Top>

<AS985 _Main PCB_Bottom>

3.4.2.1 Checking DC Power Supply Circuit

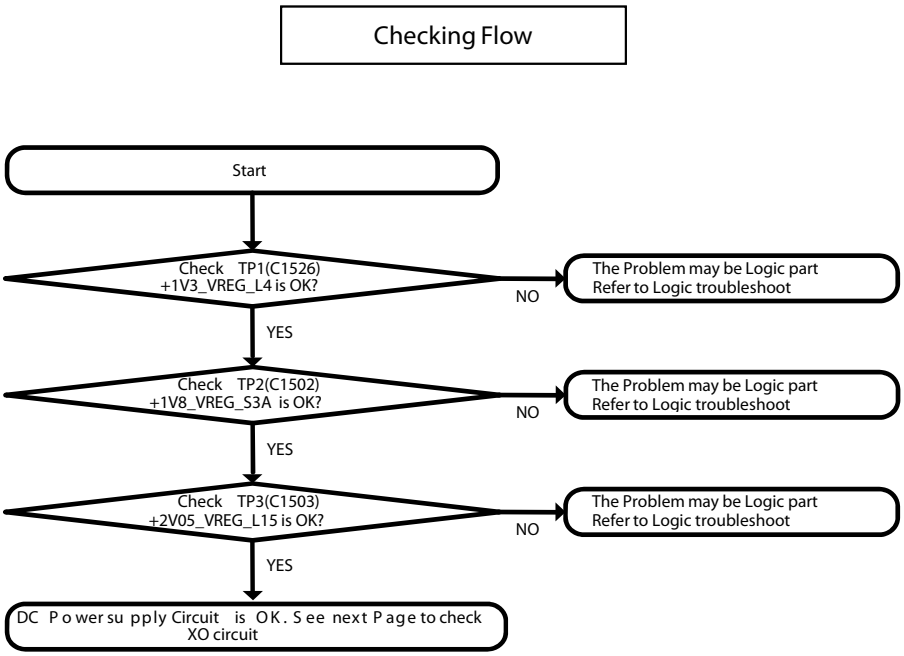

3.4.2.1 Checking DC Power Supply Circuit

Test Point

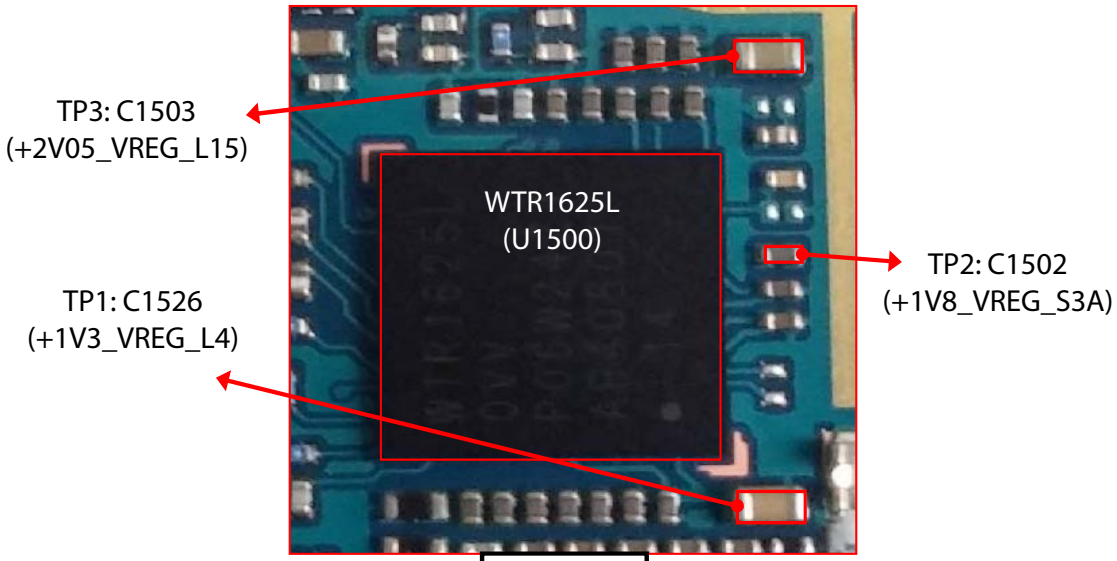

Top Side

Circuit Diagram

+1V3V_VREG_L4 / +1V8_VREG_S3A / +2V05_VREG_L15

3.4.2.2 Checking WTR1625L XO Circuit

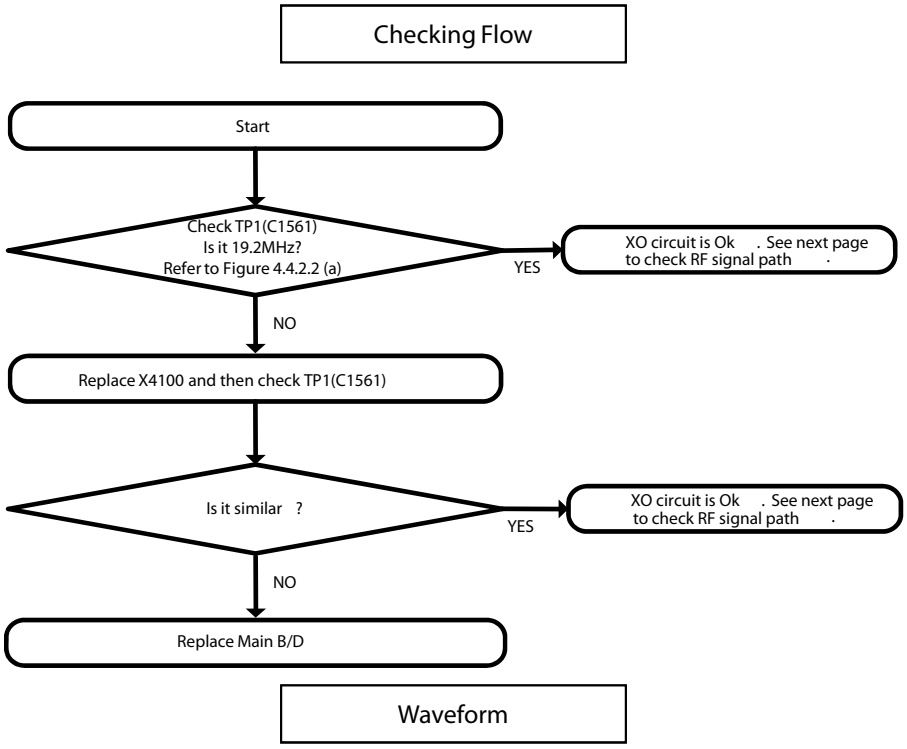

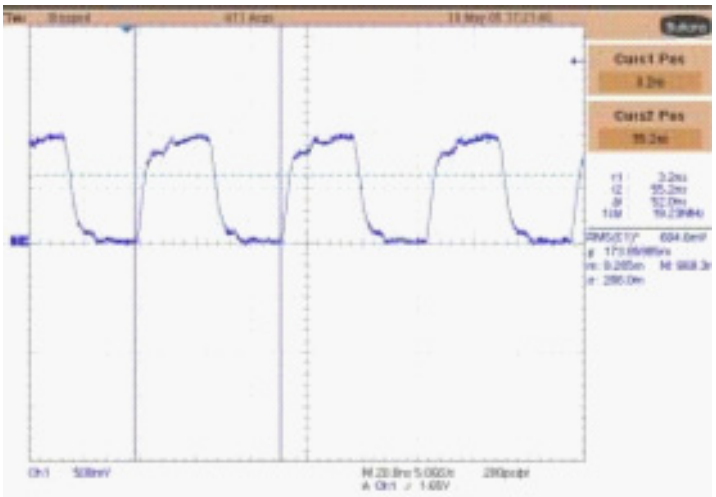

Figure 3.4.2.2 (a)

3.4.2.2 Checking WTR1625L XO Circuit

Test Point

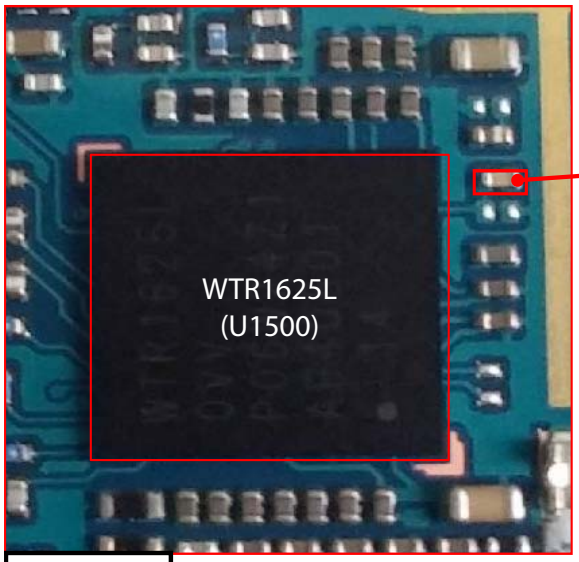

TP1 : C1561
(WTR0_XO_IN)

Top Side

Circuit Diagram

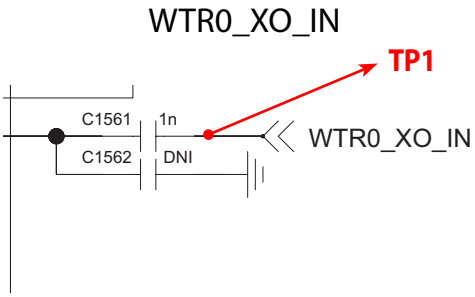

3.4.2.3 Checking WTR1625L TX Out Circuit

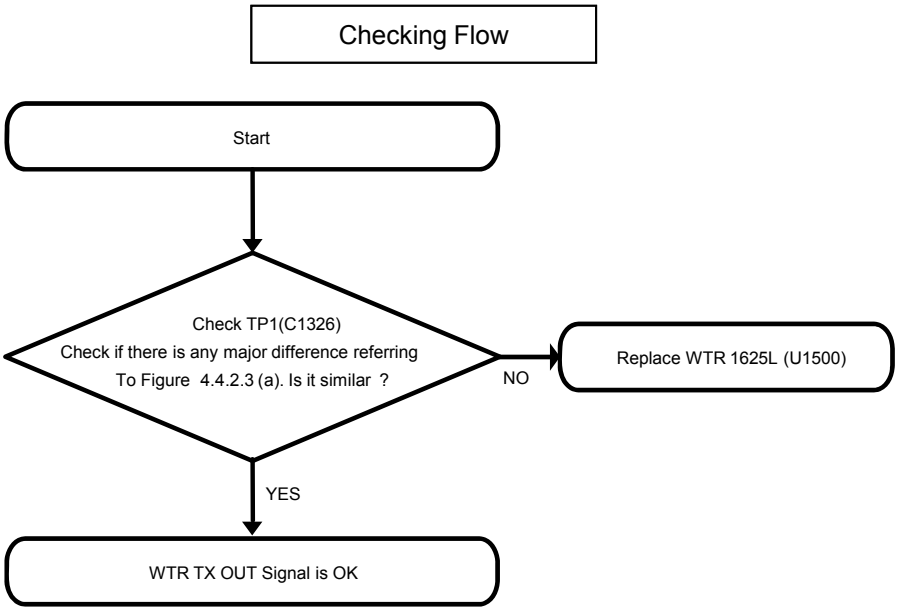

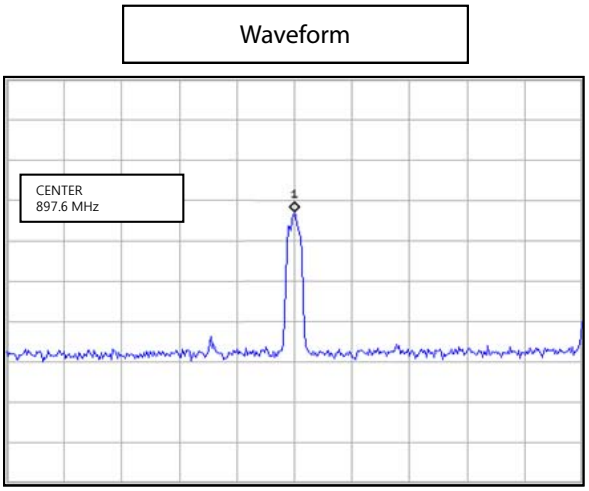

Figure 3.4.2.3 (a)

3.4.2.3 Checking WTR1625L TX Out circuit

Test Point

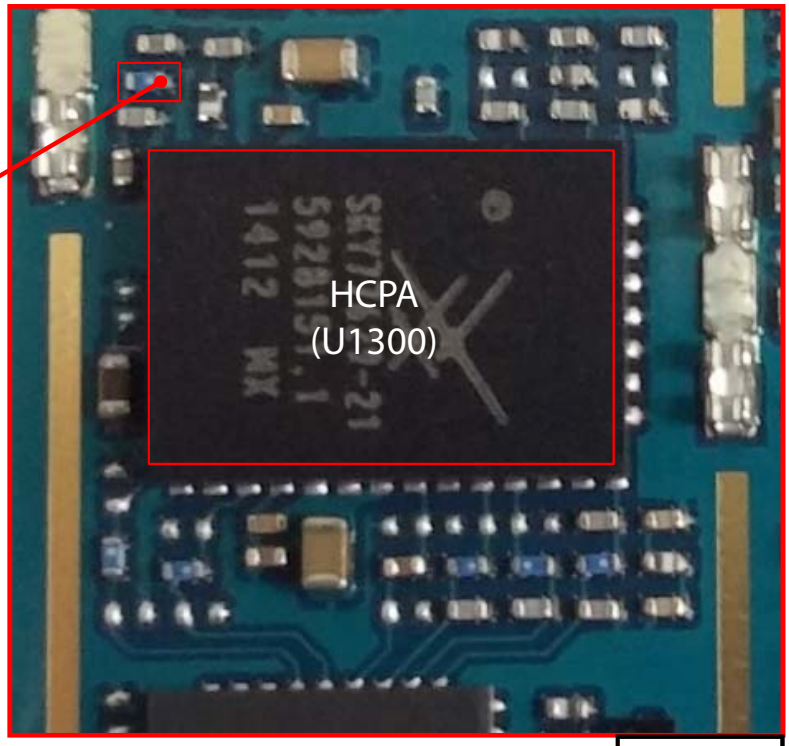

TP1 : C1326
(WTR0_TX_LB2_OUT

Top Side

Circuit Diagram

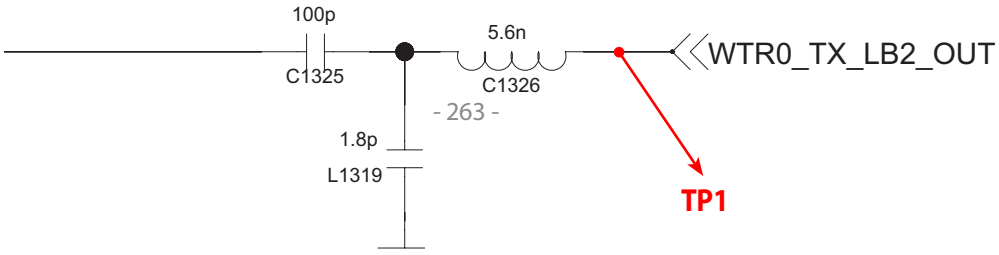

3.4.2.4 Check HCPA Circuit

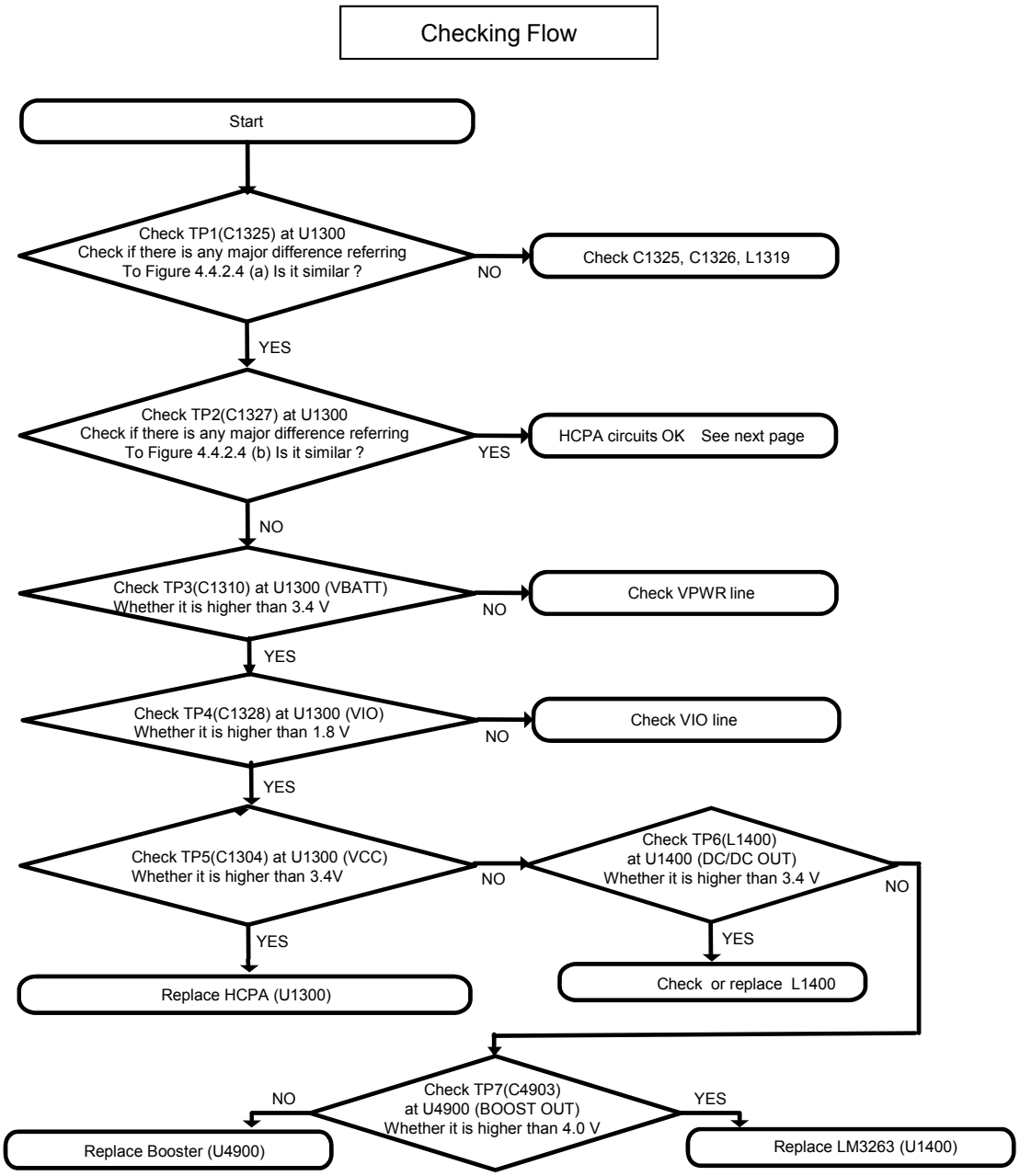

3.4.2.4 Check HCPA Circuit

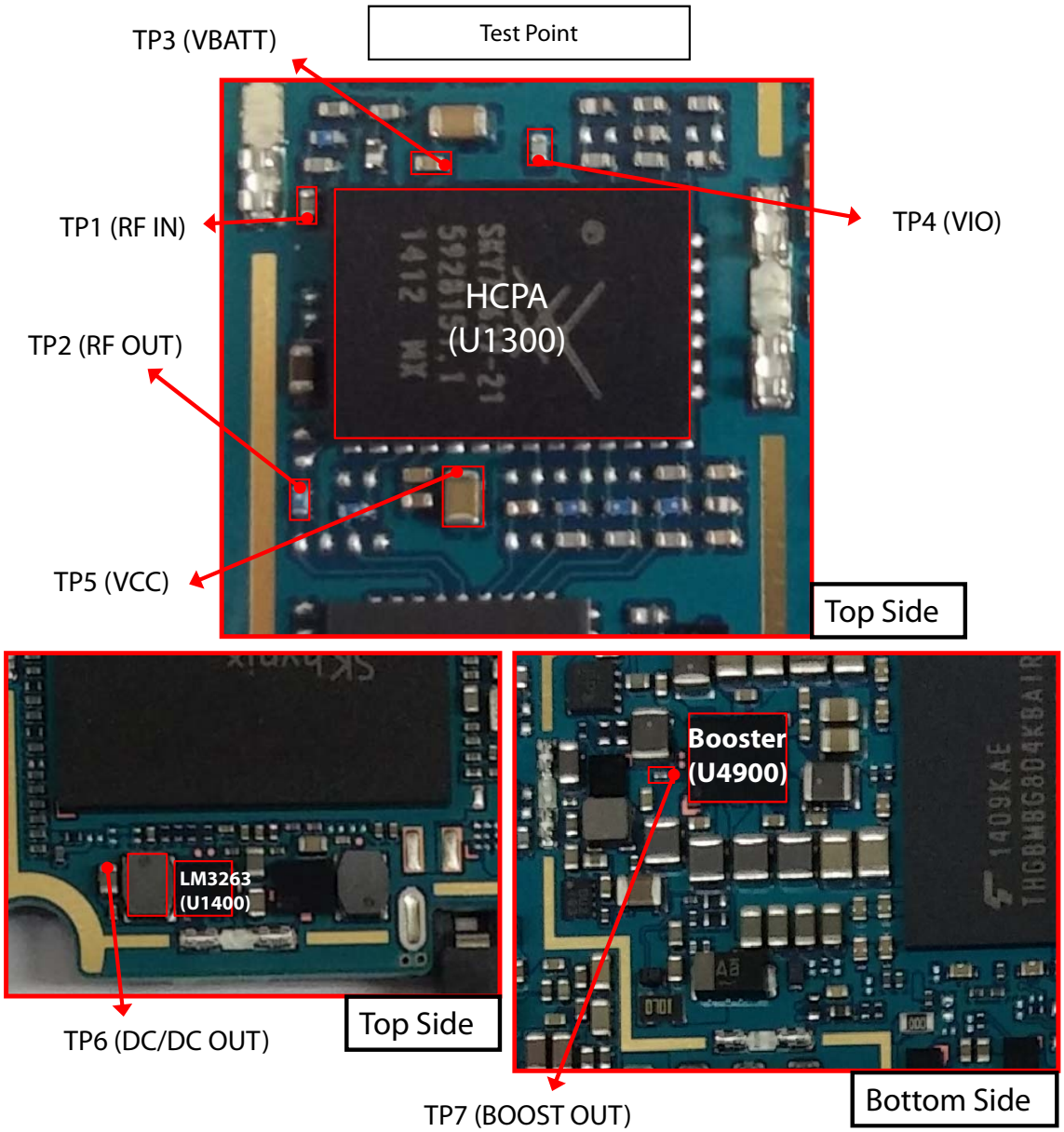

3.4.2.4 Check HCPA Circuit

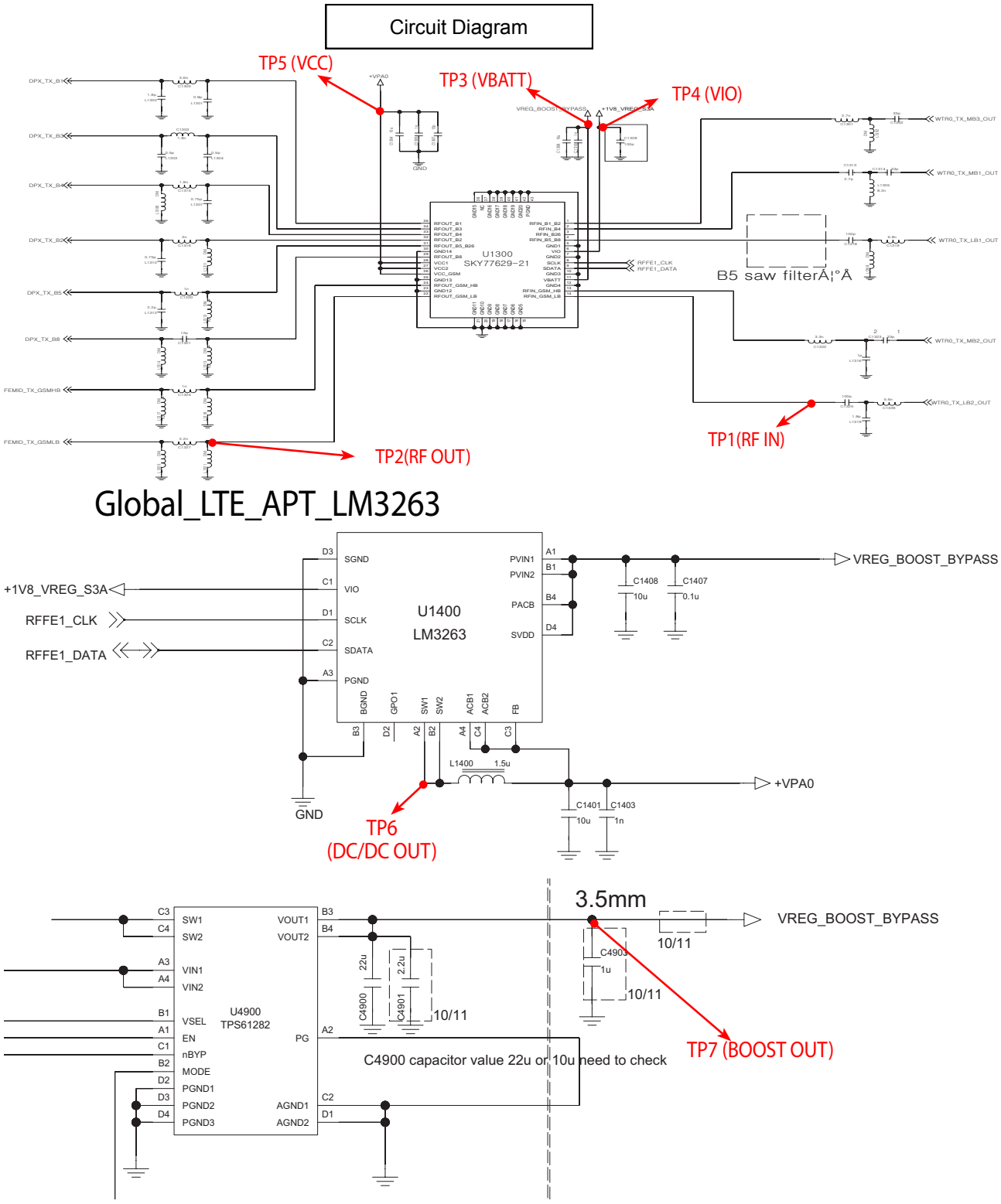

3.4.2.4 Check HCPA Circuit

Waveform

TP1

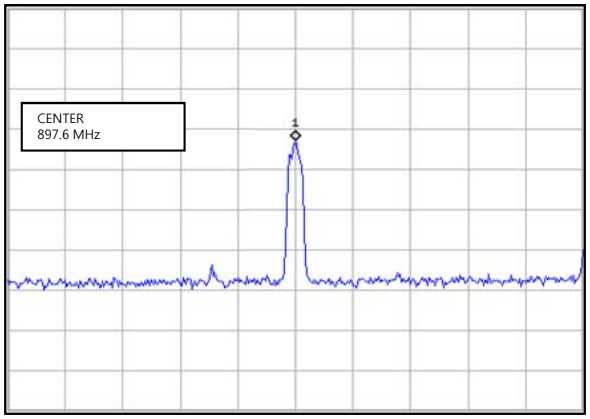

Figure 3.4.2.4 (a)

TP2

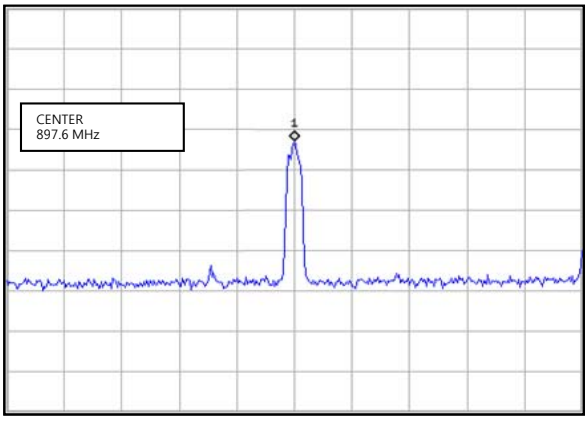

Figure 3.4.2.4 (b)

3.4.2.5 Checking RF Signal Path (FEM)

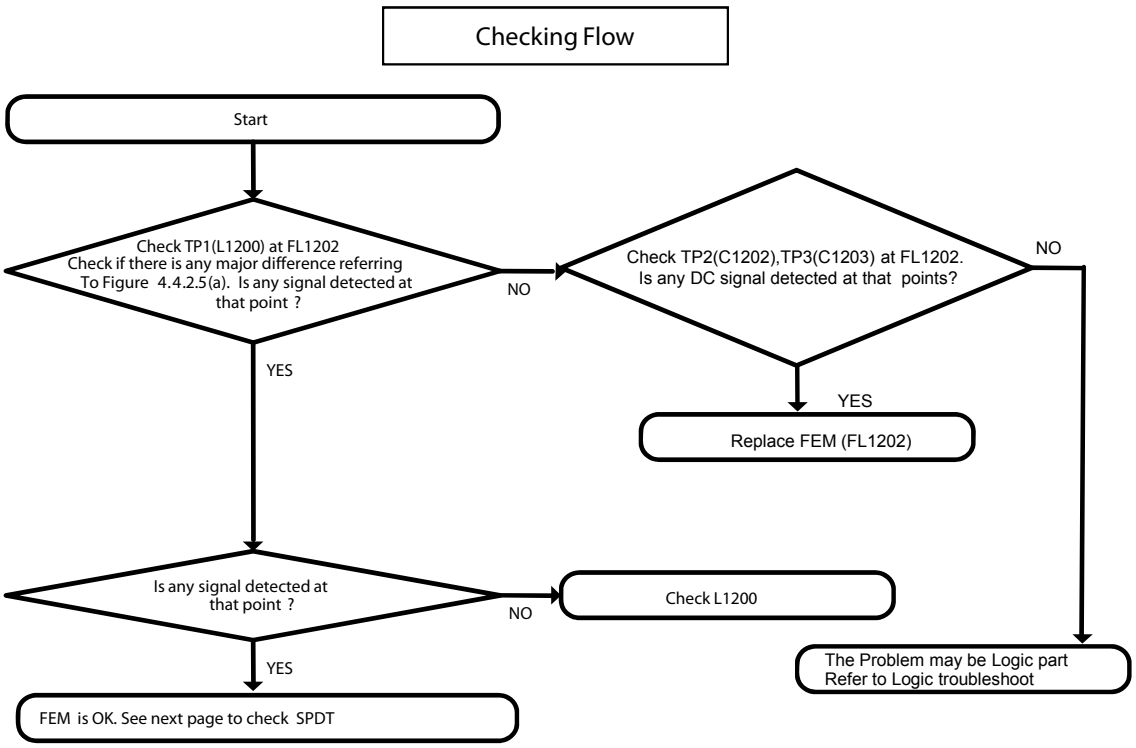

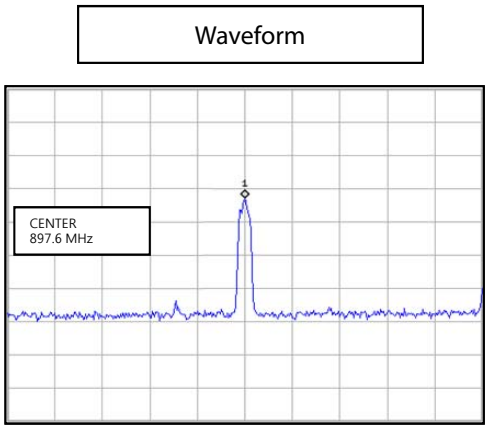

Figure 3.4.2.5 (a)

3.4.2.5 Checking RF Signal Path (FEM)

Test Point

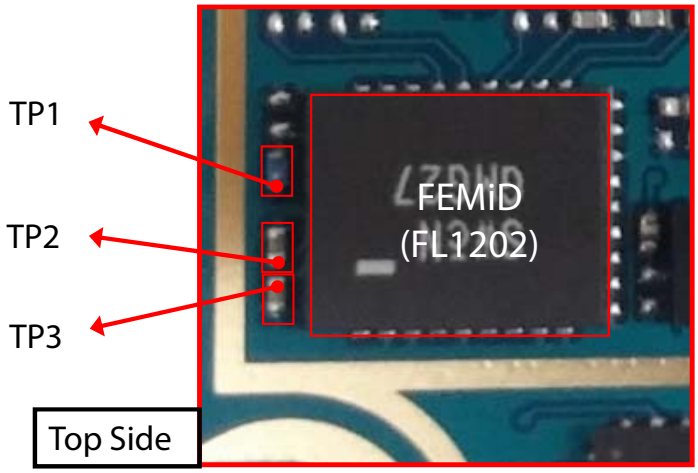

Circuit Diagram

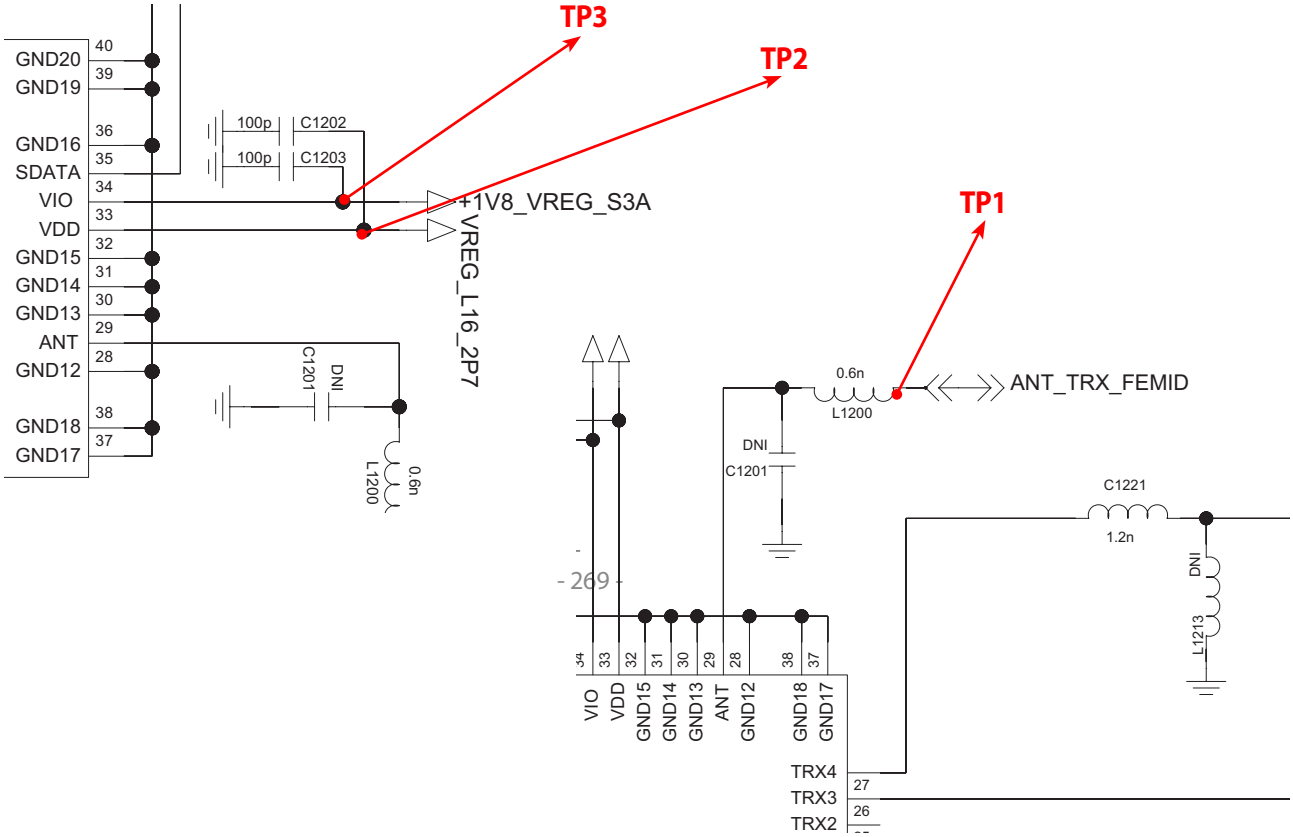

3.4.2.6 Checking RF Signal Path (SPDT)

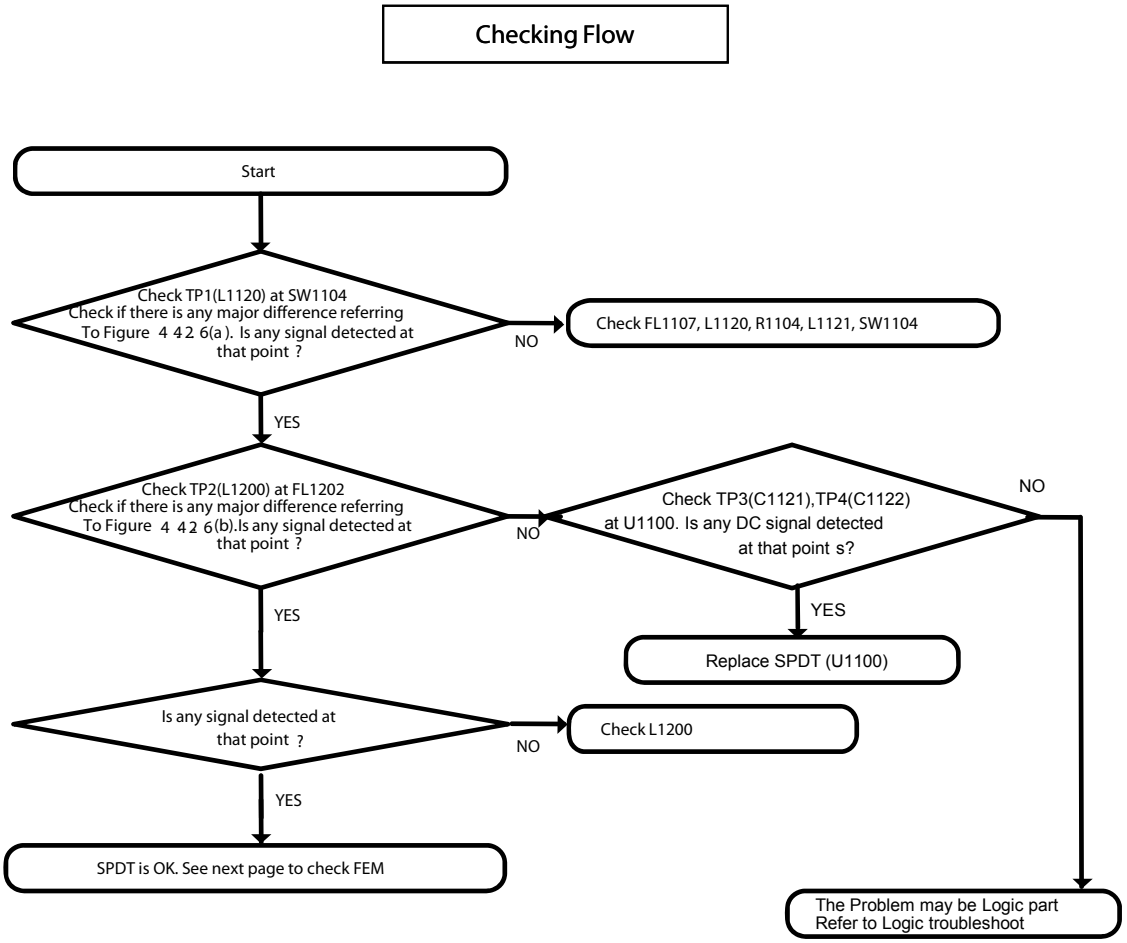

3.4.2.6 Checking RF Signal Path (SPDT)

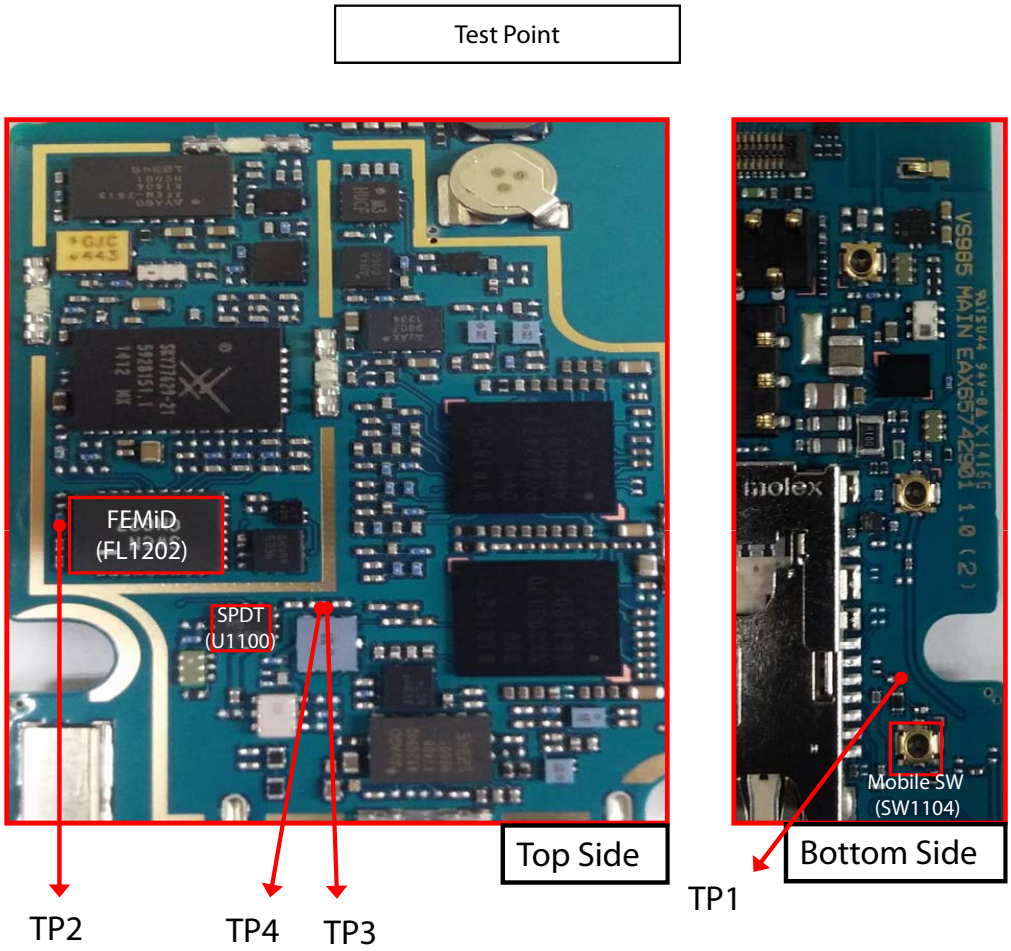

3.4.2.6 Checking RF Signal Path (SPDT)

Circuit Diagram

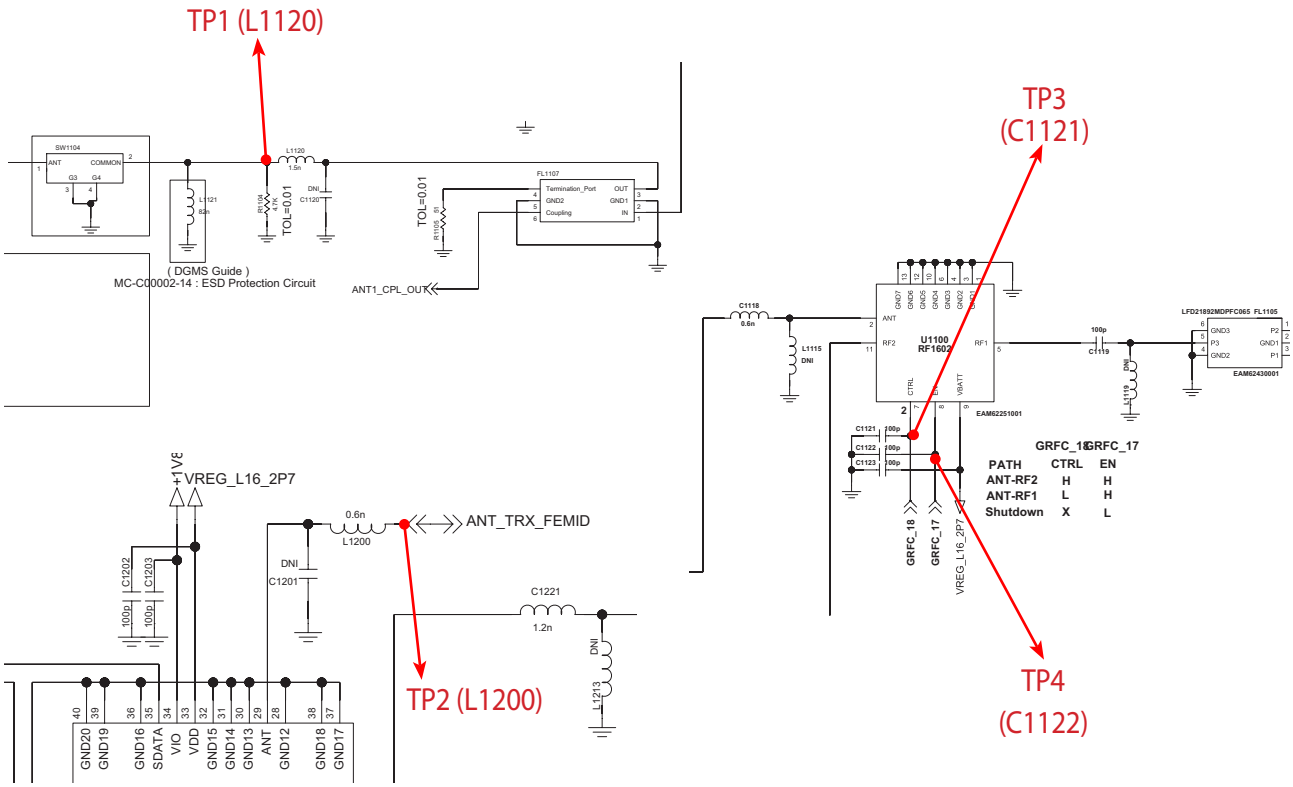

Waveform

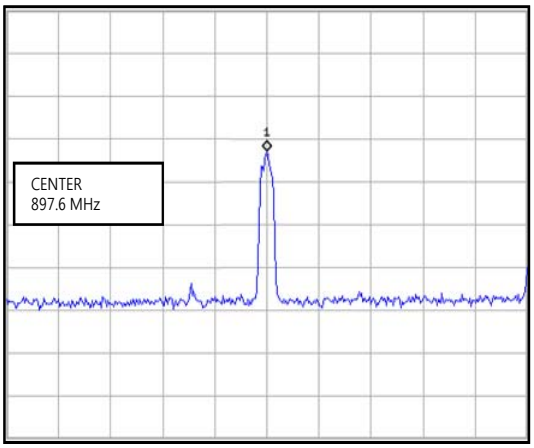

Figure 3.4.2.6 (a)

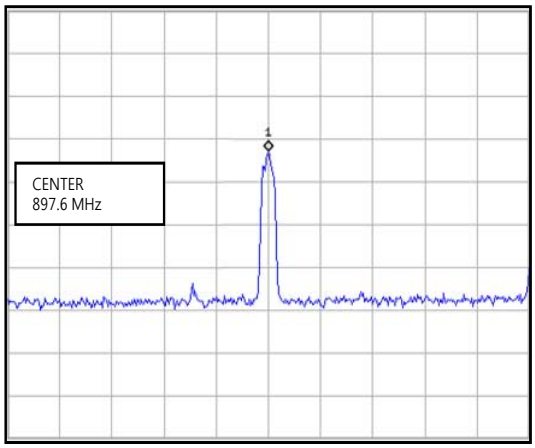

Figure 3.4.2.6 (b)

3.4.3 GSM 1800 Tx

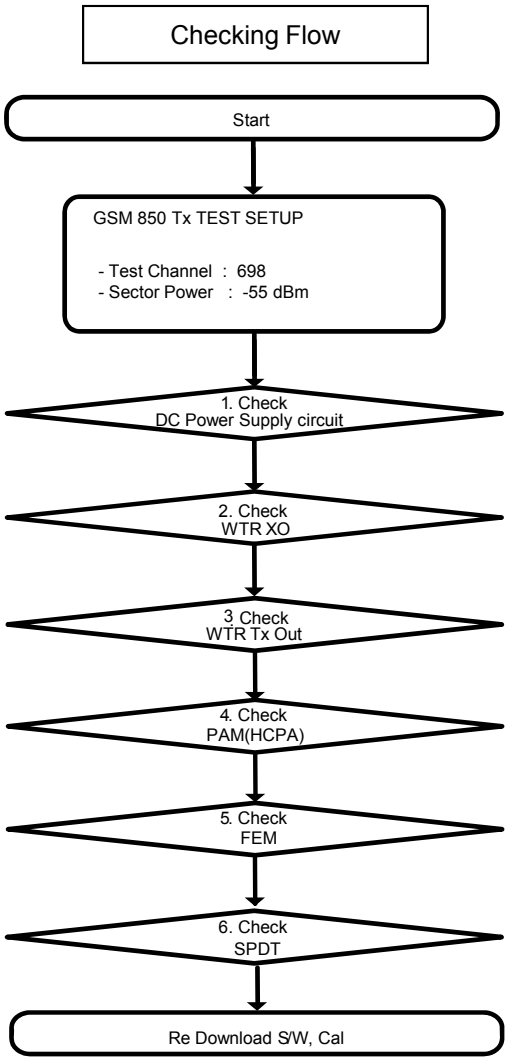

※ There are no Test Points on the IQ Data Line. So It is impossible to check the IQ Data Wave Form

3.4.3 GSM 1800 Tx

GSM 1800 TX RF PATH

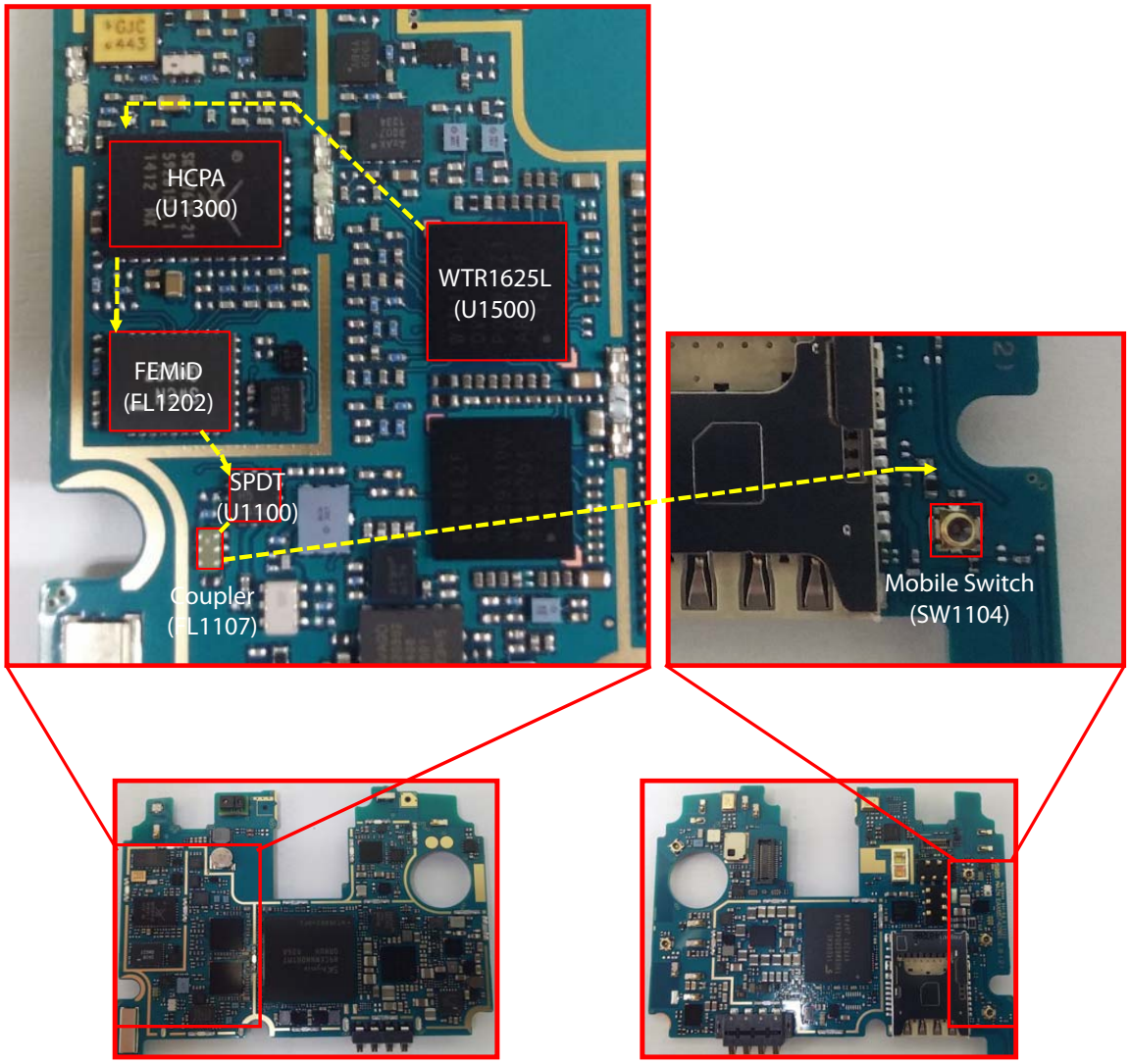

<AS985 _Main PCB_Top>

<AS985 _Main PCB_Bottom>

3.4.3.1 Checking DC Power Supply Circuit

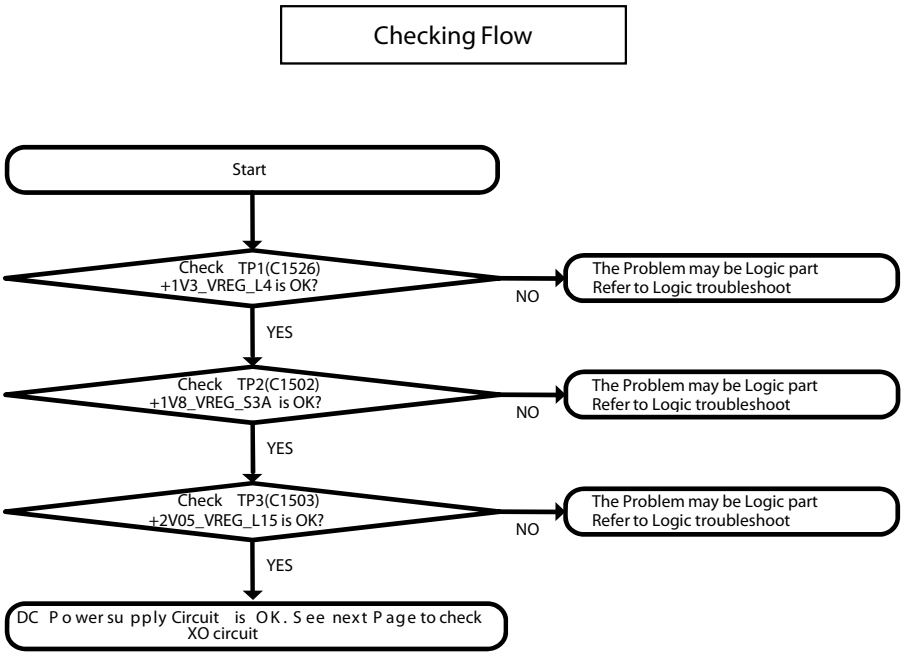

3.4.3.1 Checking DC Power Supply Circuit

Test Point

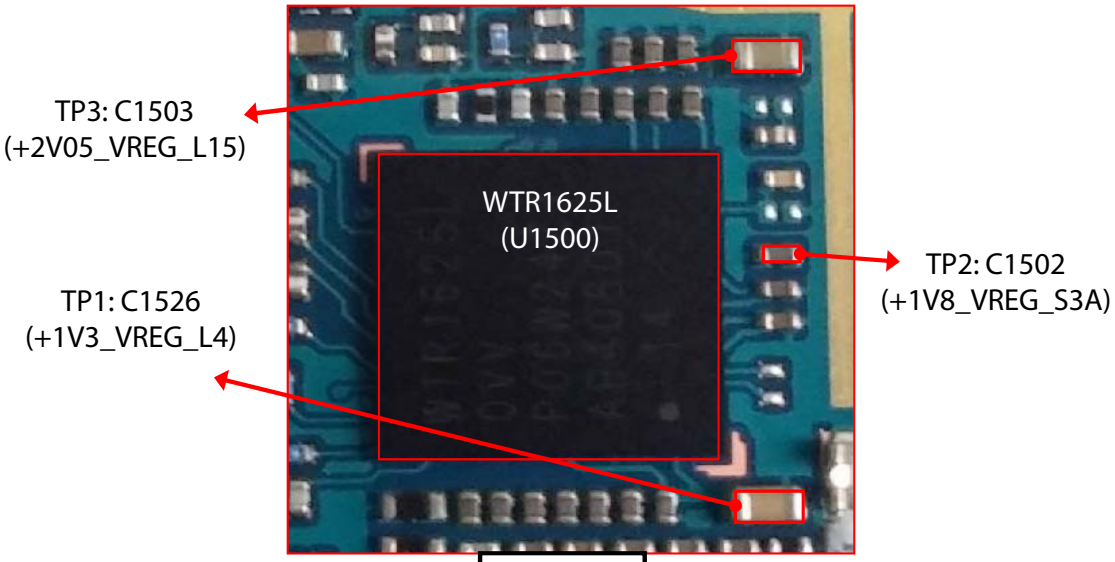

Top Side

Circuit Diagram

+1V3V_VREG_L4 / +1V8_VREG_S3A / +2V05_VREG_L15

3.4.3.2 Checking WTR1625L XO Circuit

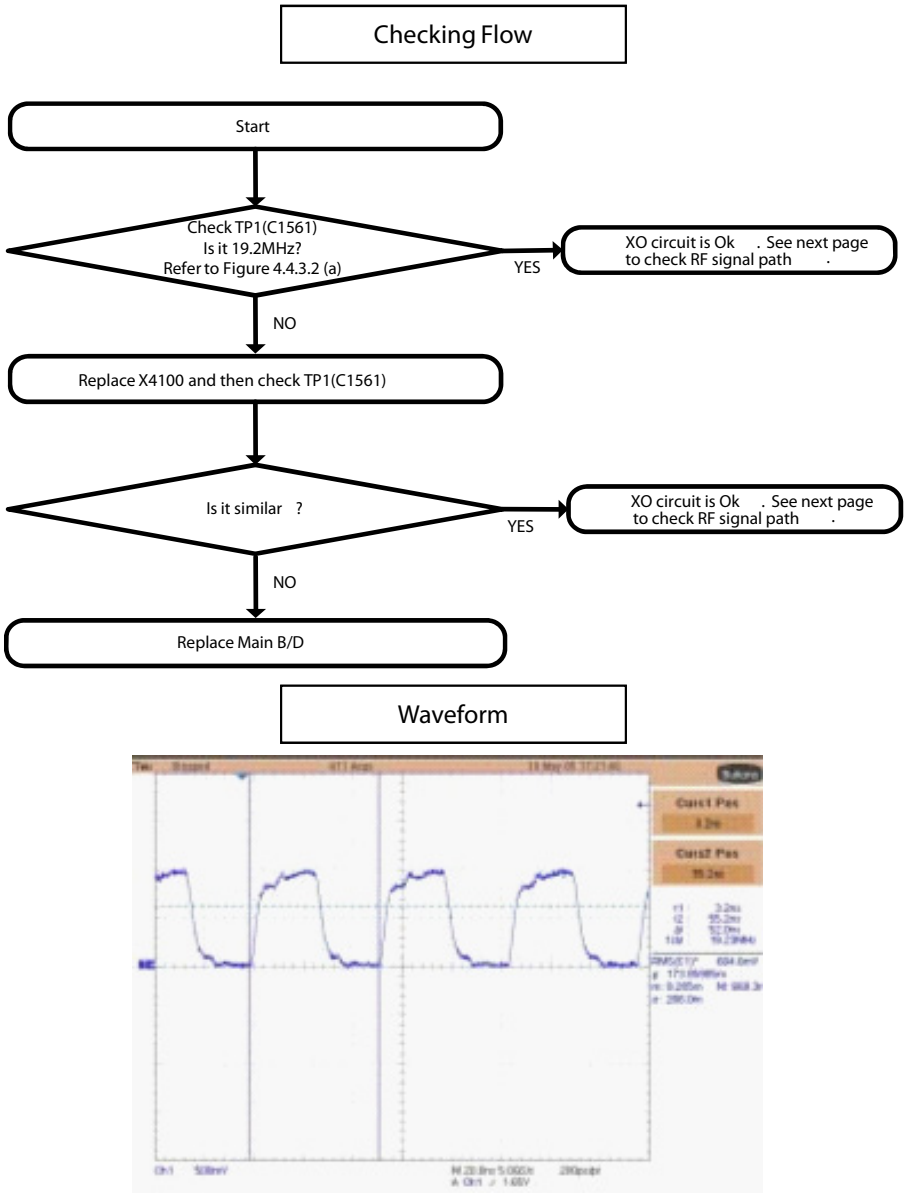

Figure 3.4.3.2 (a)

3.4.3.2 Checking WTR1625L XO Circuit

Test Point

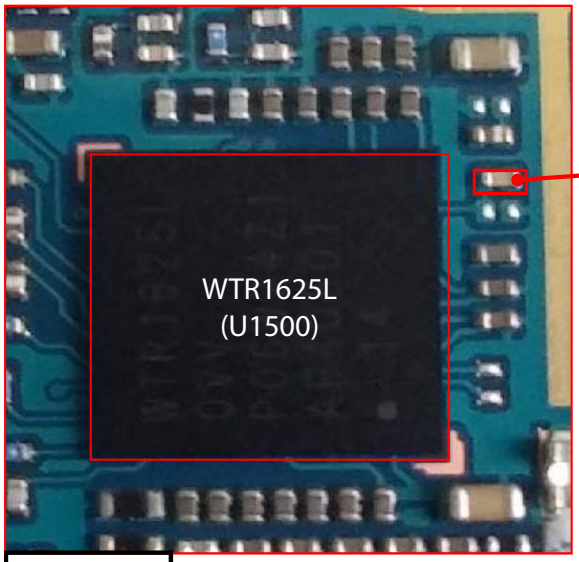

TP1 : C1561
(WTR0_XO_IN)

Top Side

Circuit Diagram

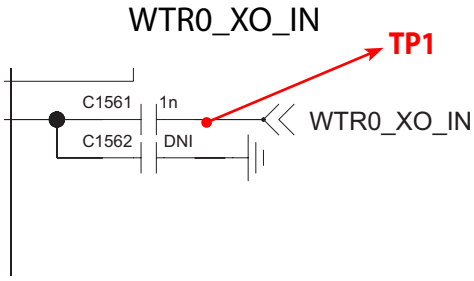

3.4.3.3 Checking WTR1625L TX Out Circuit

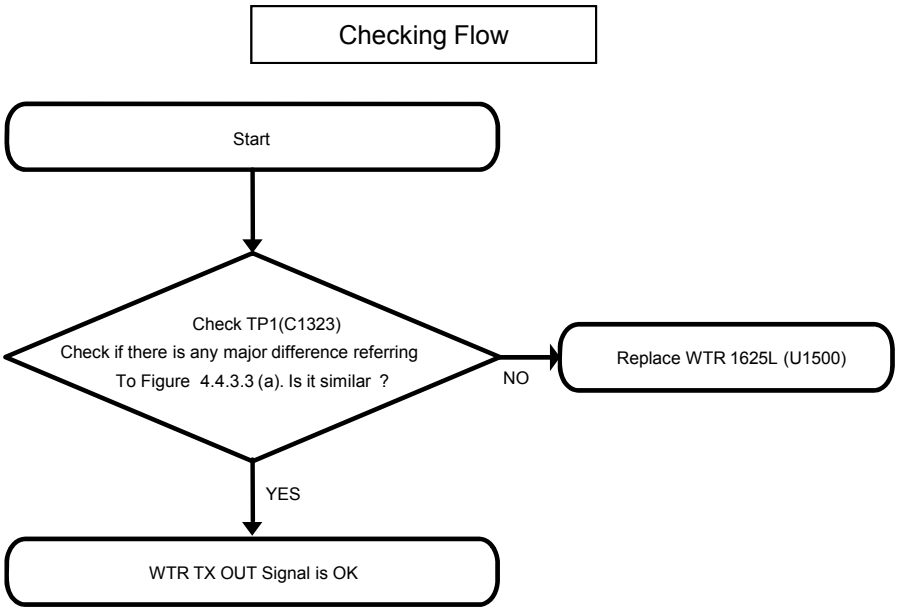

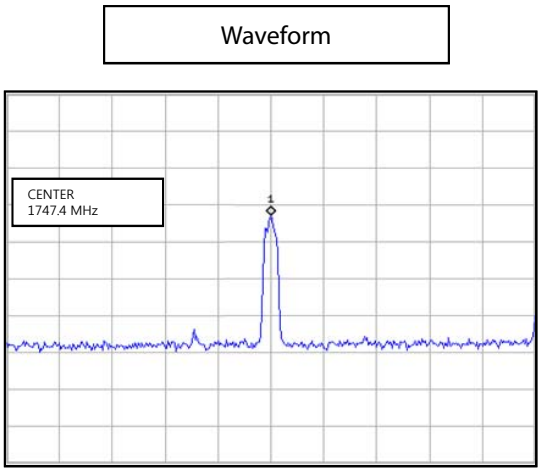

Figure 3.4.3.3 (a)

3.4.3.3 Checking WTR1625L TX Out circuit

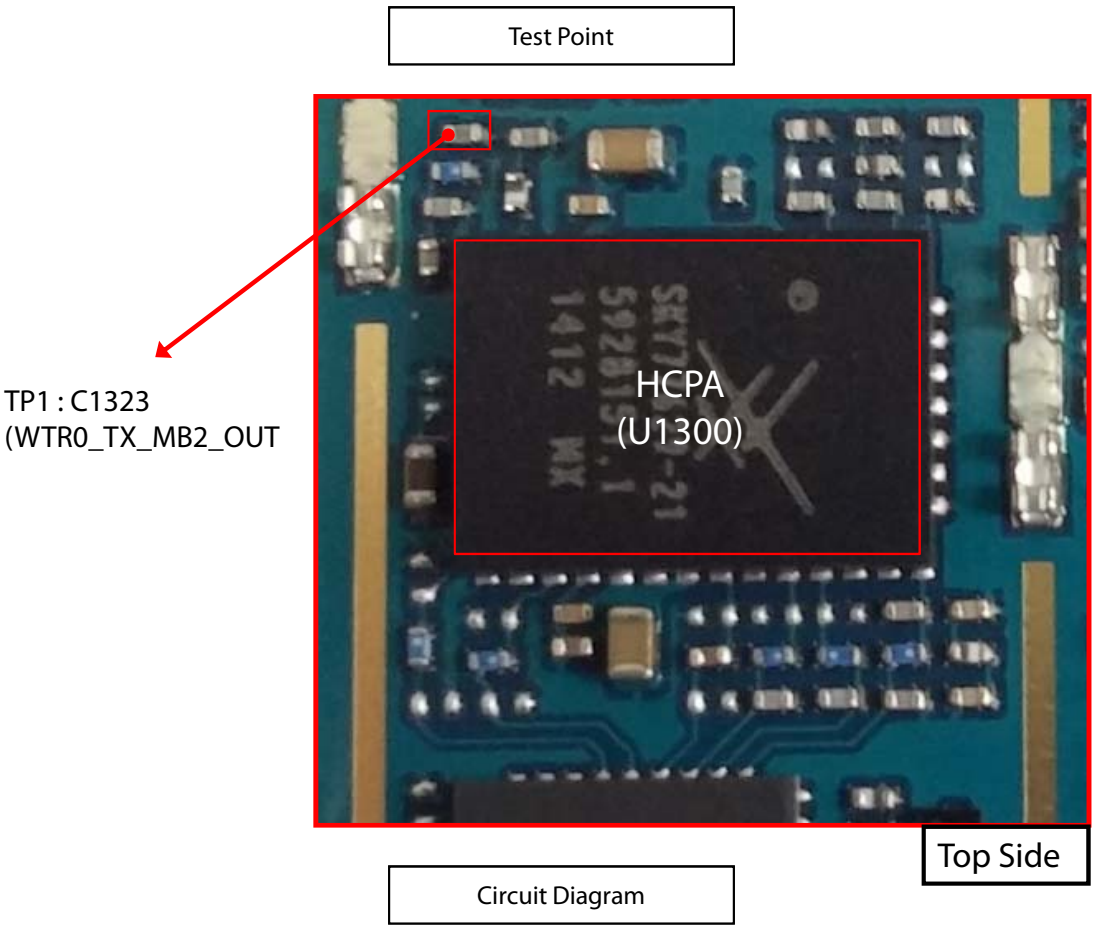

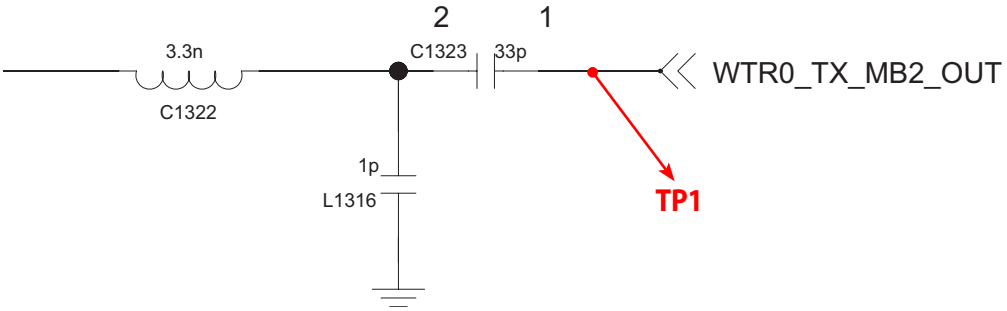

3.4.3.4 Check HCPA Circuit

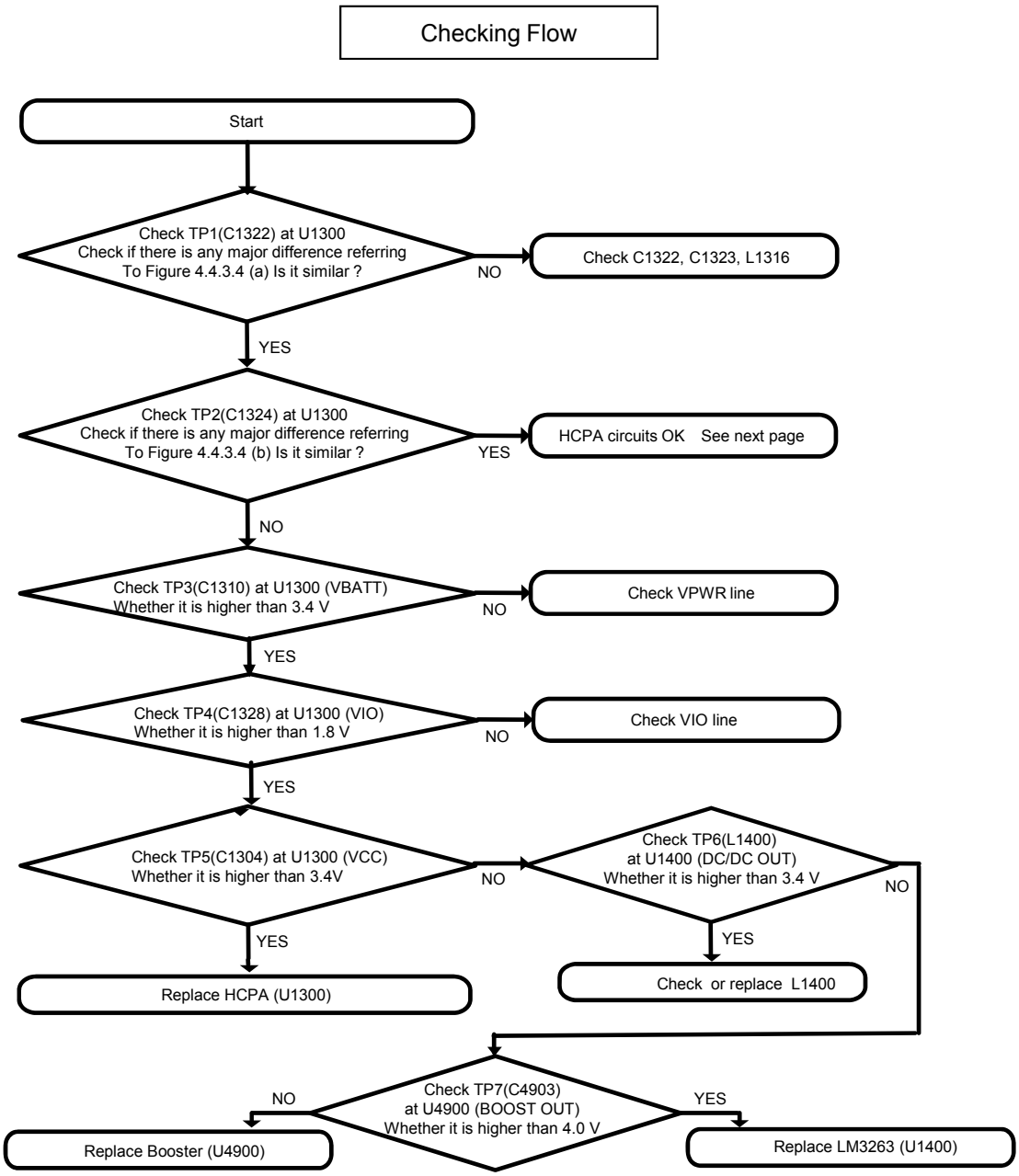

3.4.3.4 Check HCPA Circuit

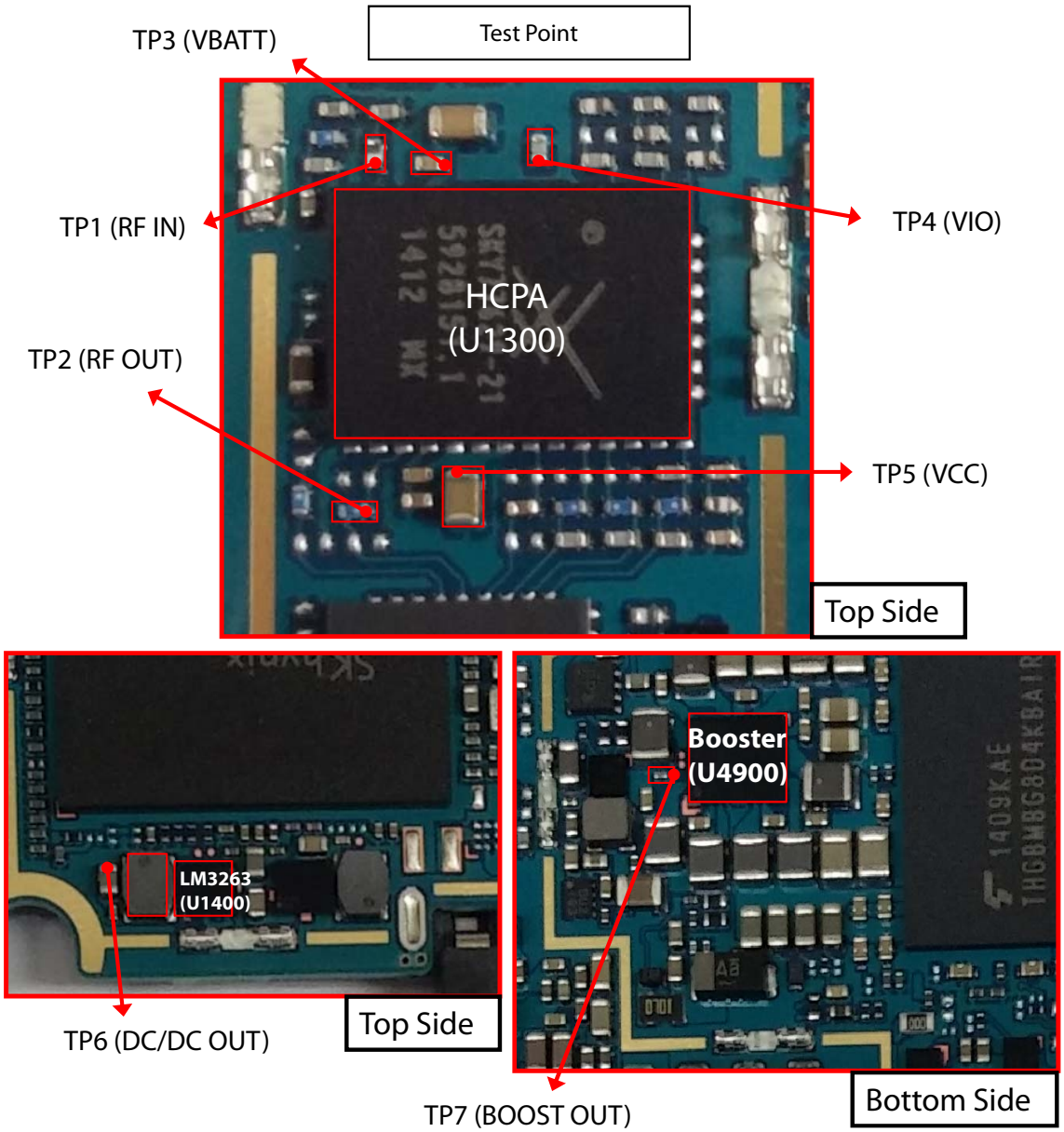

3.4.3.4 Check HCPA Circuit

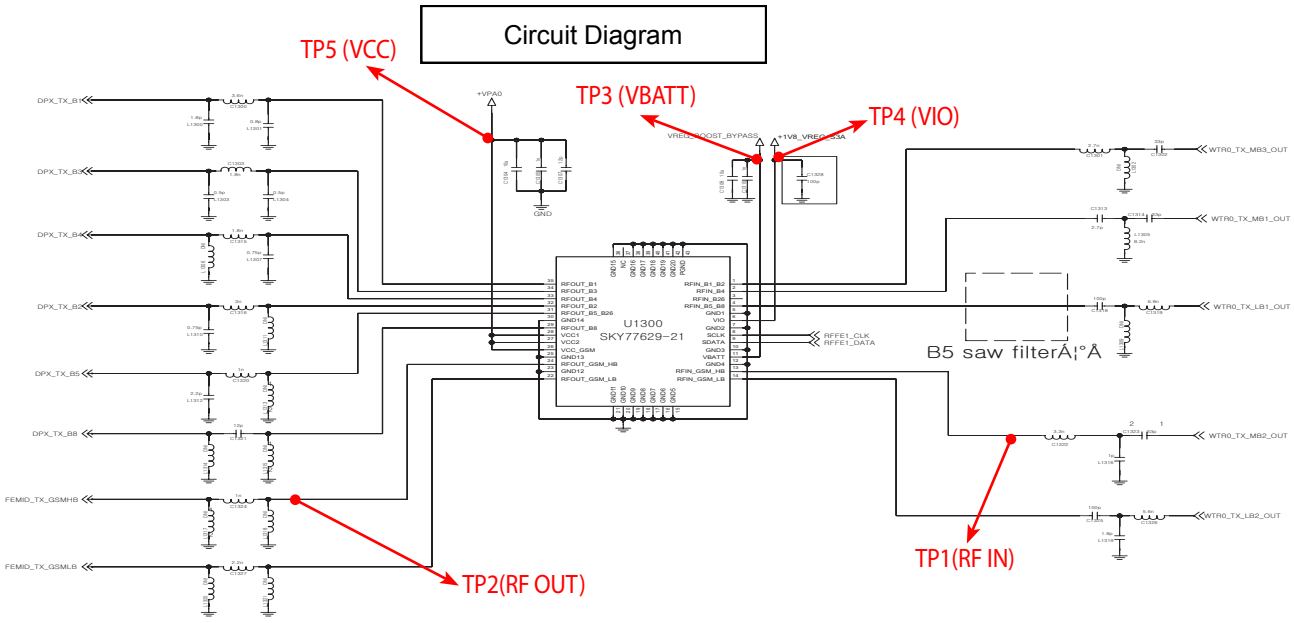

Global_LTE_APT_LM3263

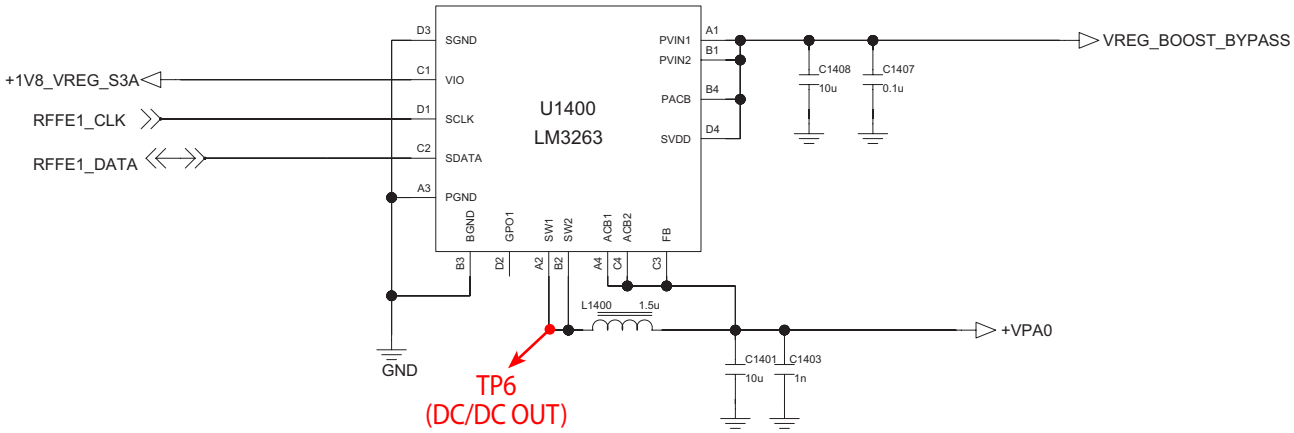

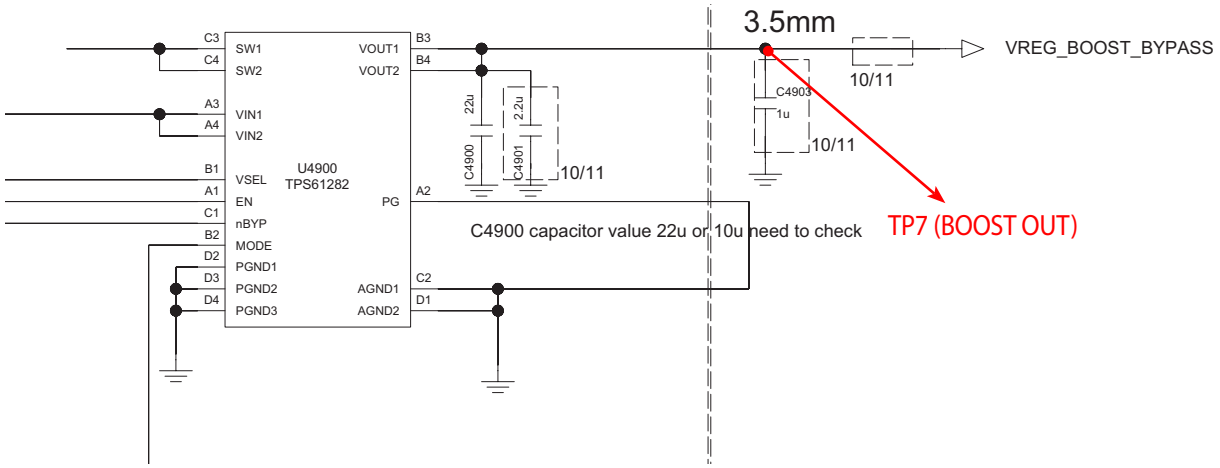

3.4.3.4 Check HCPA Circuit

Waveform

TP1

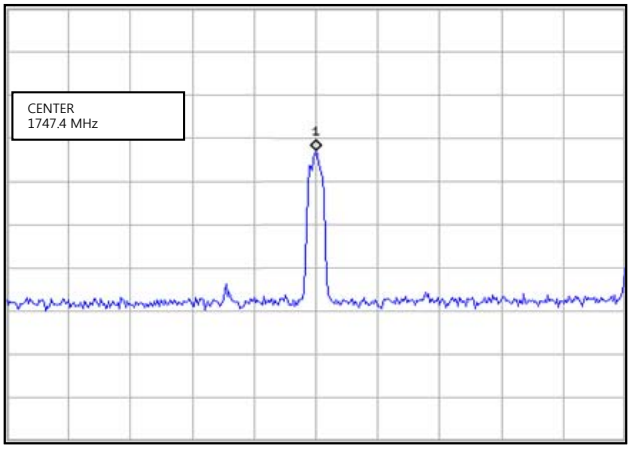

Figure 3.4.3.4 (a)

TP2

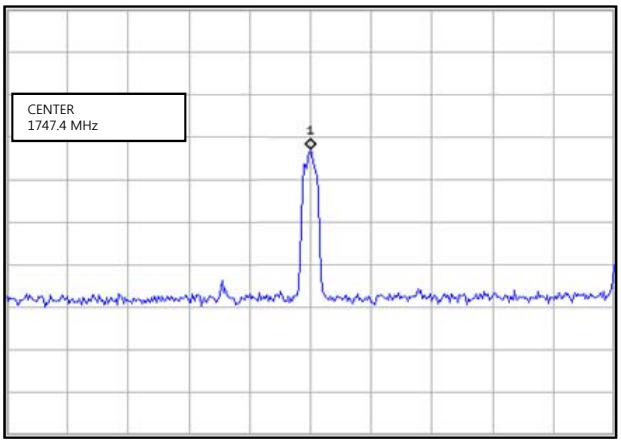

Figure 3.4.3.4 (b)

3.4.3.5 Checking RF Signal Path (FEM)

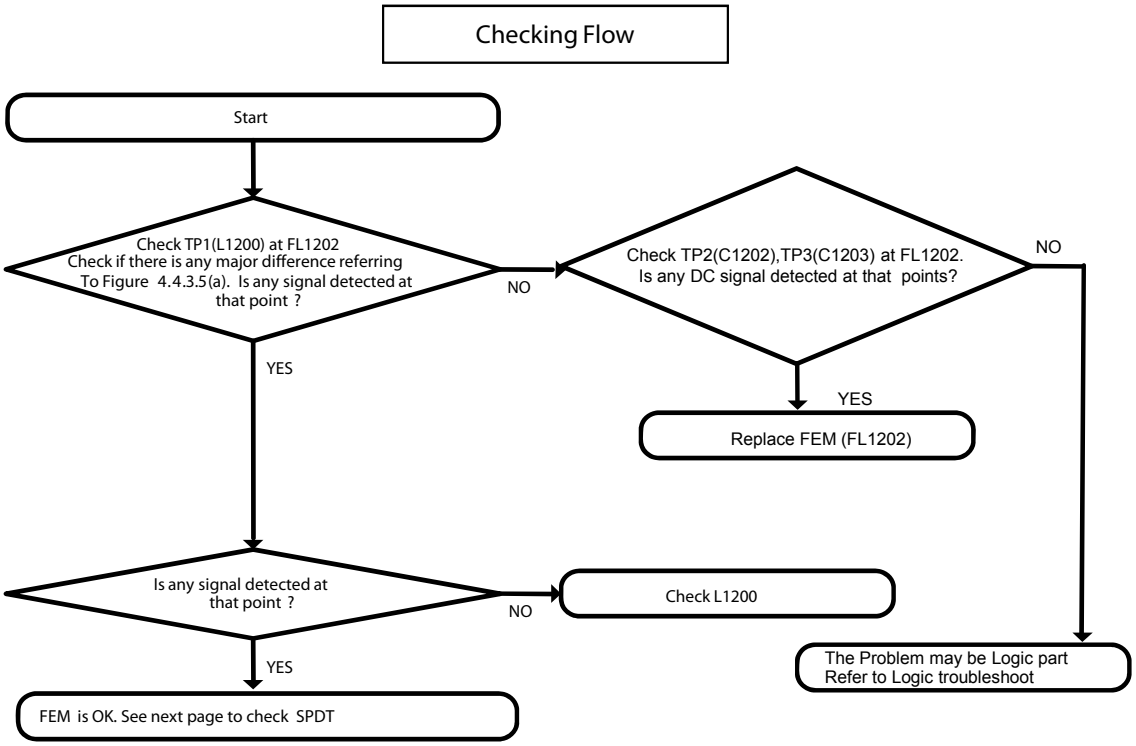

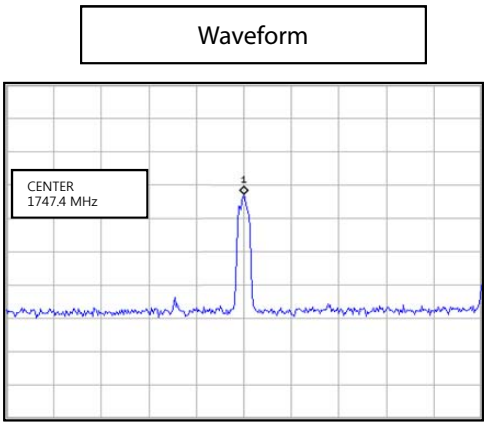

Figure 3.4.3.5 (a)

3.4.3.5 Checking RF Signal Path (FEM)

Test Point

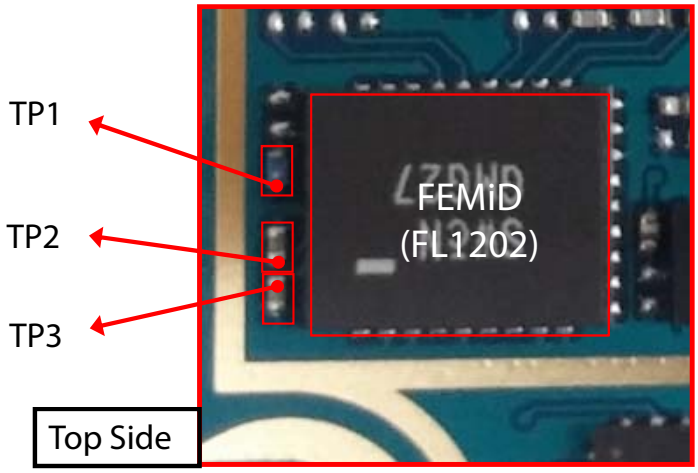

Circuit Diagram

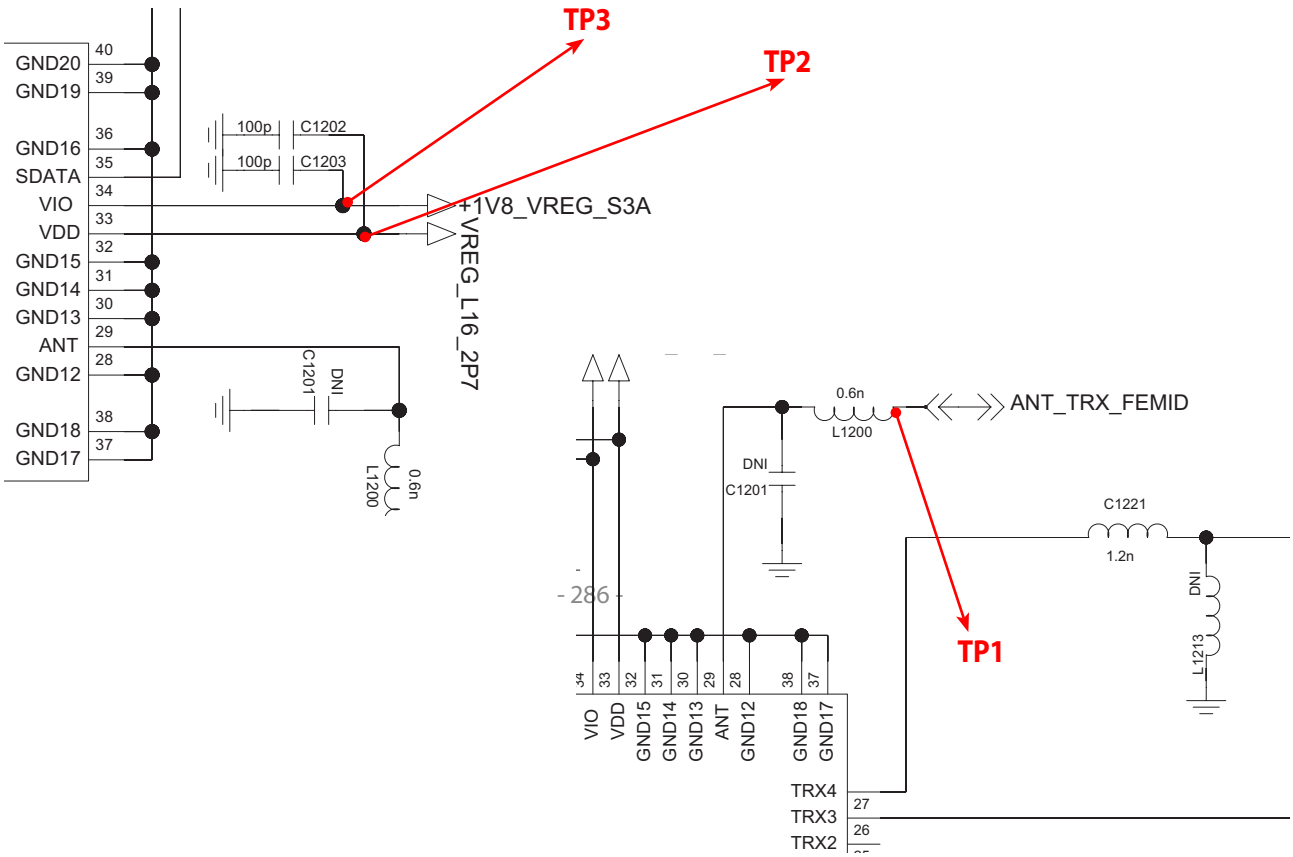

3.4.3.6 Checking RF Signal Path (SPDT)

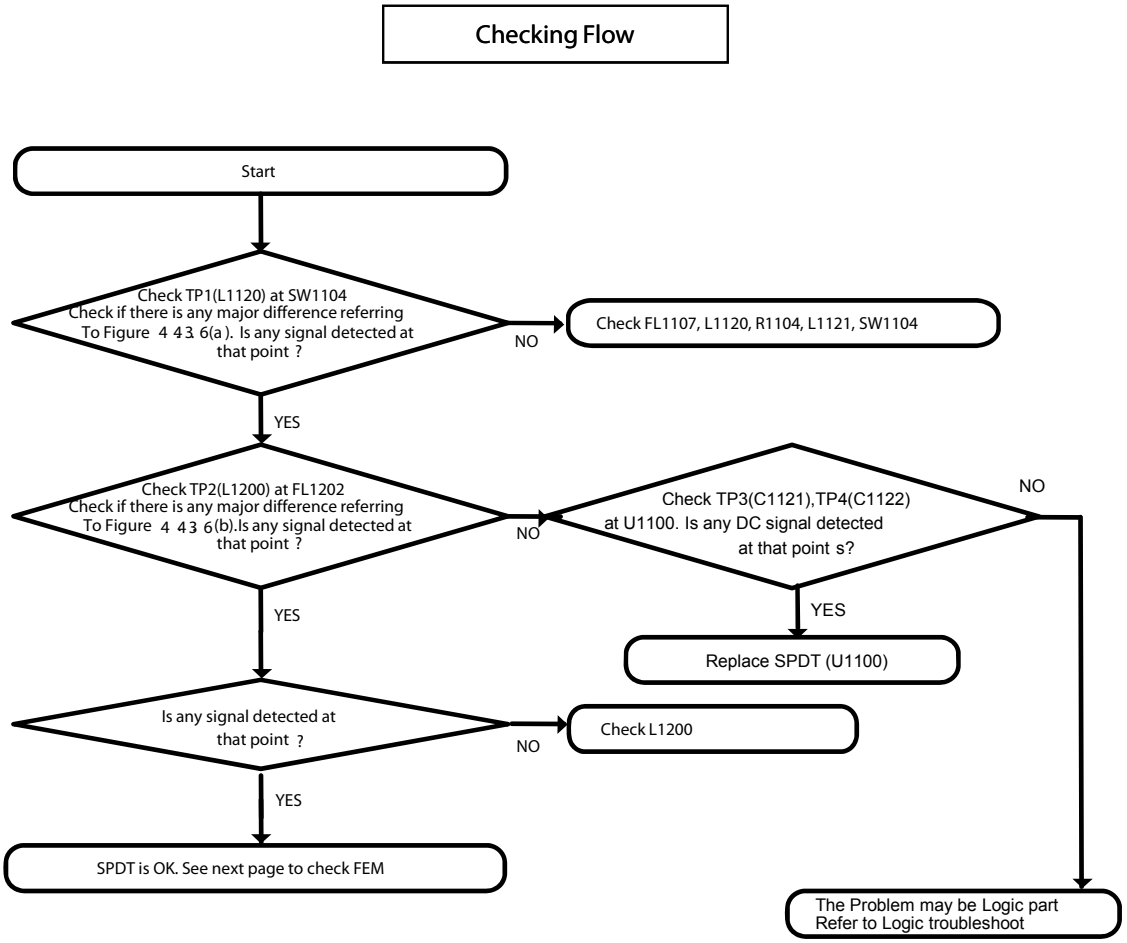

3.4.3.6 Checking RF Signal Path (SPDT)

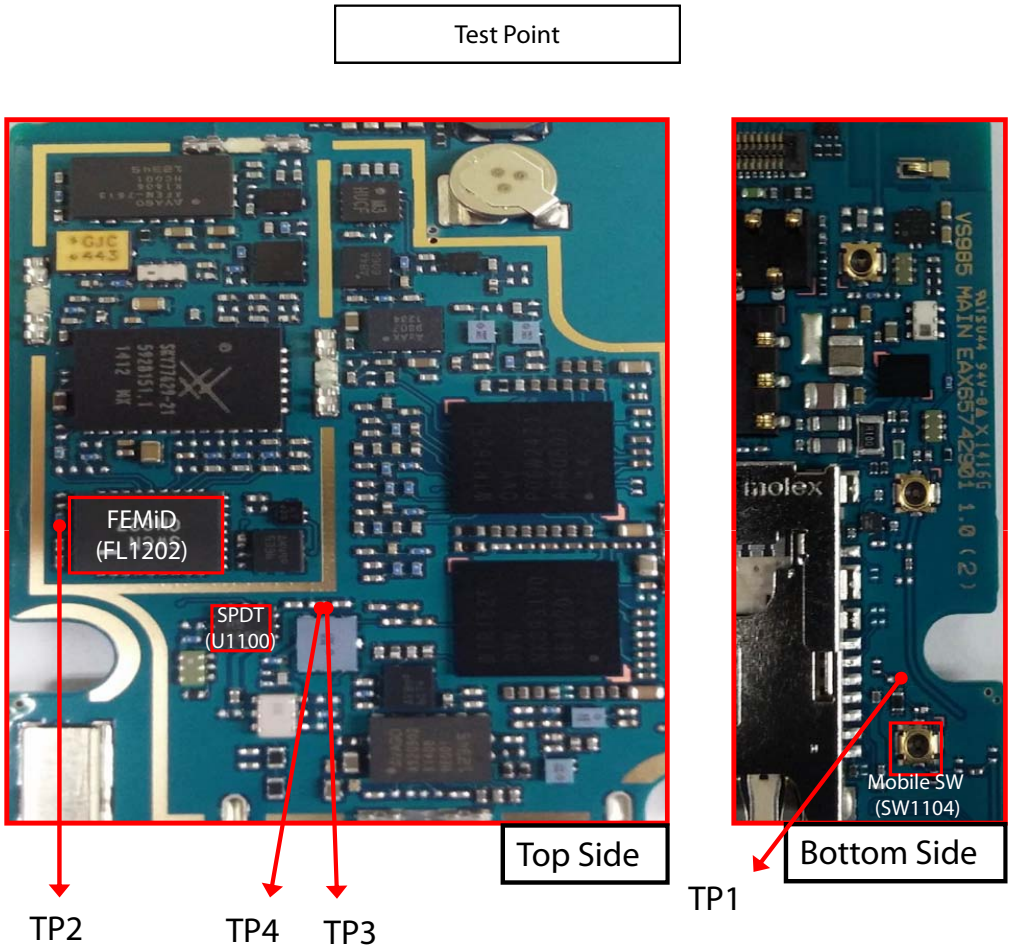

3.4.3.6 Checking RF Signal Path (SPDT)

Circuit Diagram

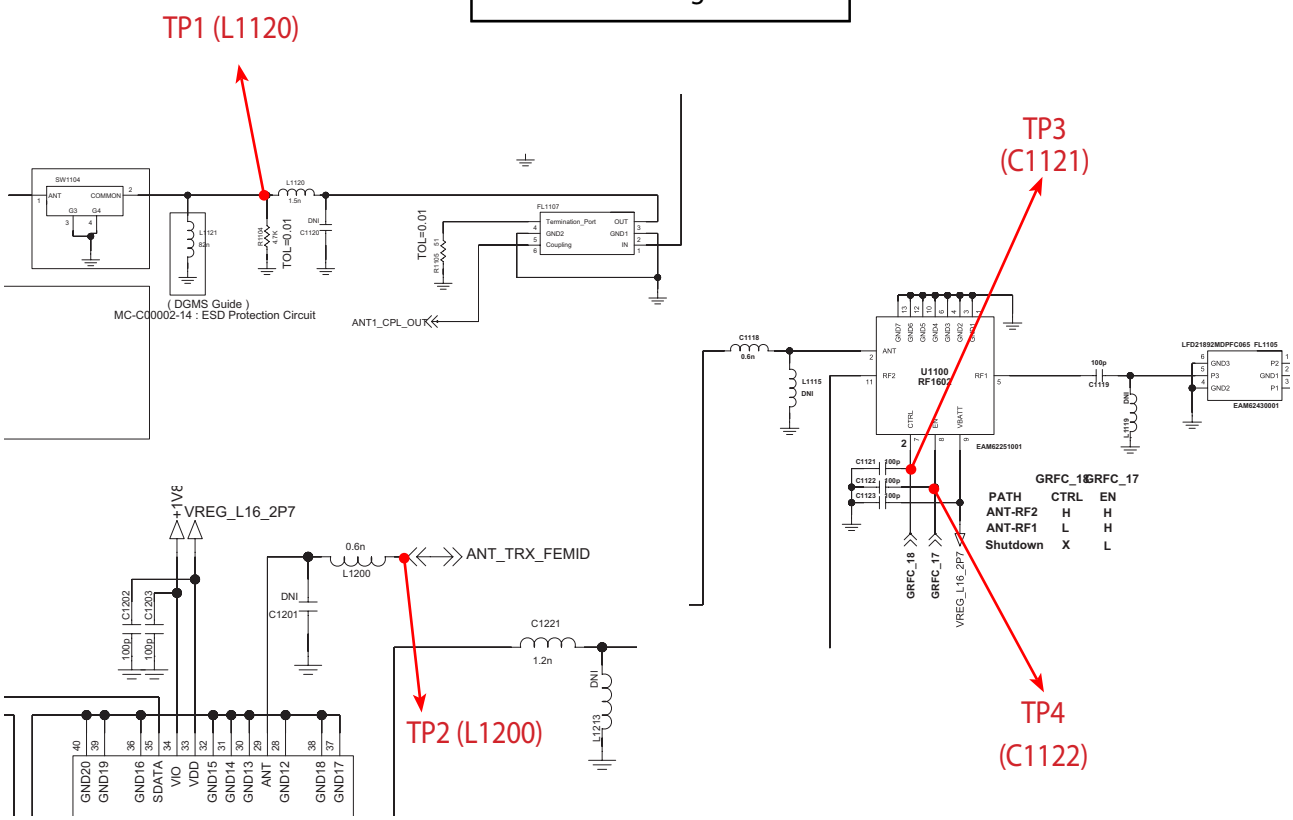

Waveform

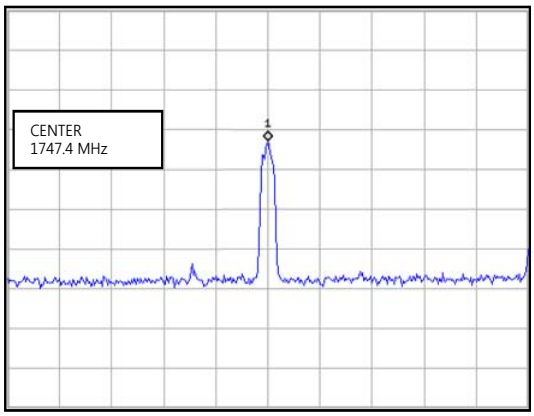

Figure 3.4.3.6(a)

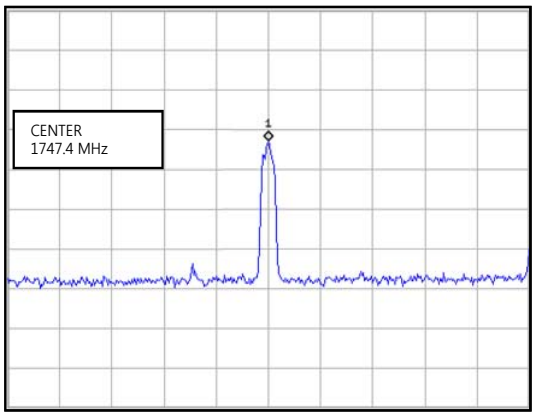

Figure 3.4.3.6(b)

3.4.4 GSM 1900 Tx

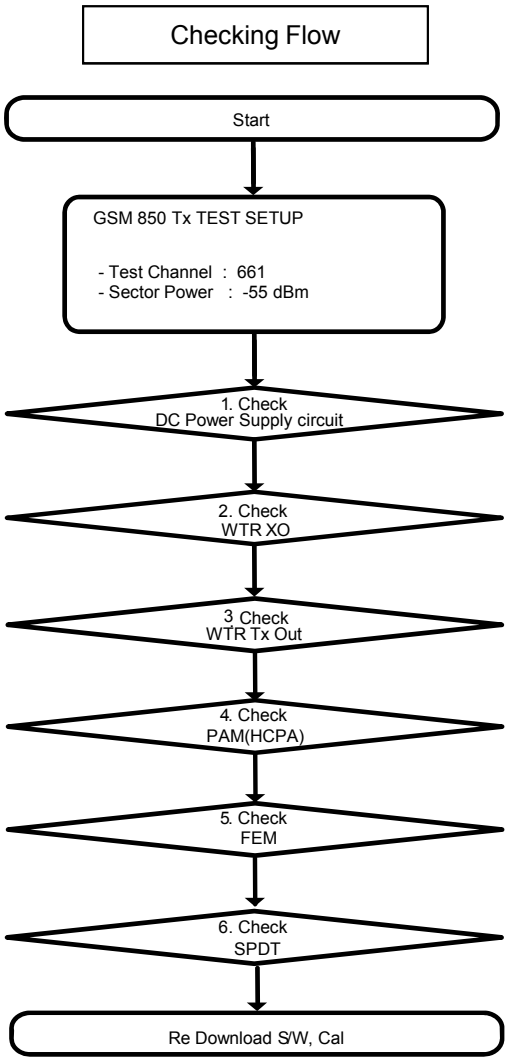

※ There are no Test Points on the IQ Data Line. So It is impossible to check the IQ Data Wave Form

3.4.4 GSM 1900 Tx

GSM 1900 TX RF PATH

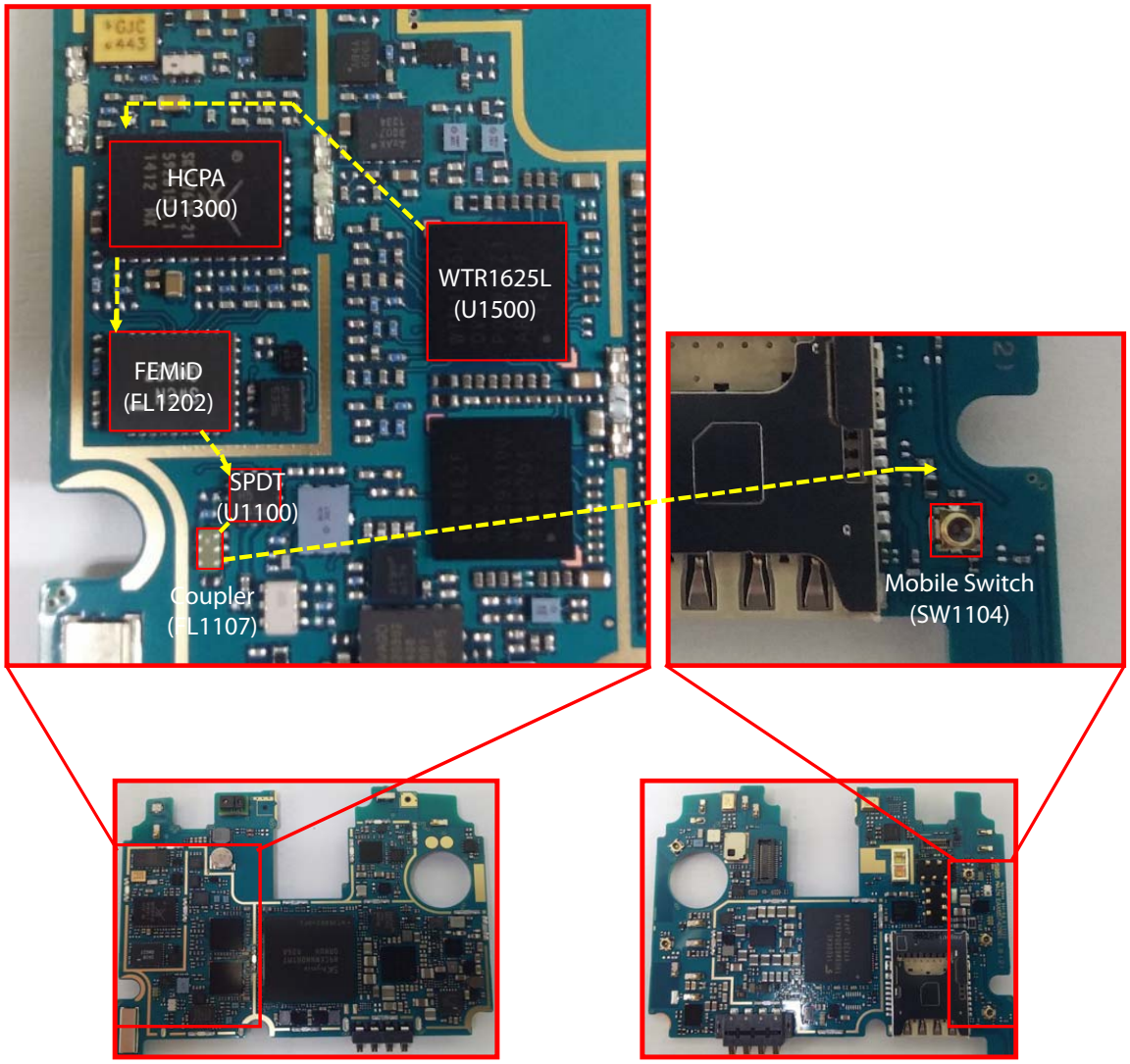

<AS985 _Main PCB_Top>

<AS985 _Main PCB_Bottom>

3.4.4.1 Checking DC Power Supply Circuit

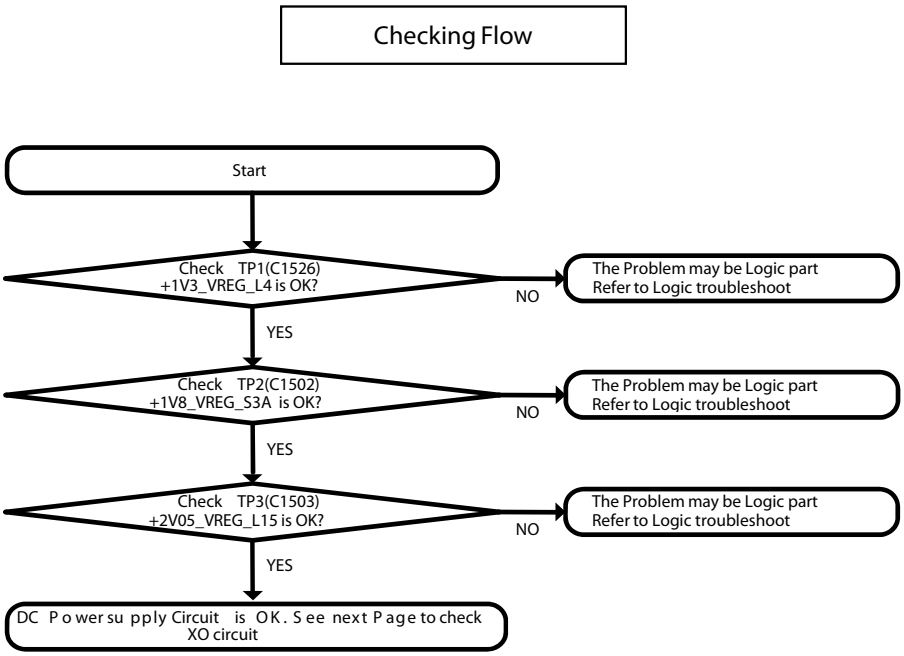

3.4.4.1 Checking DC Power Supply Circuit

Test Point

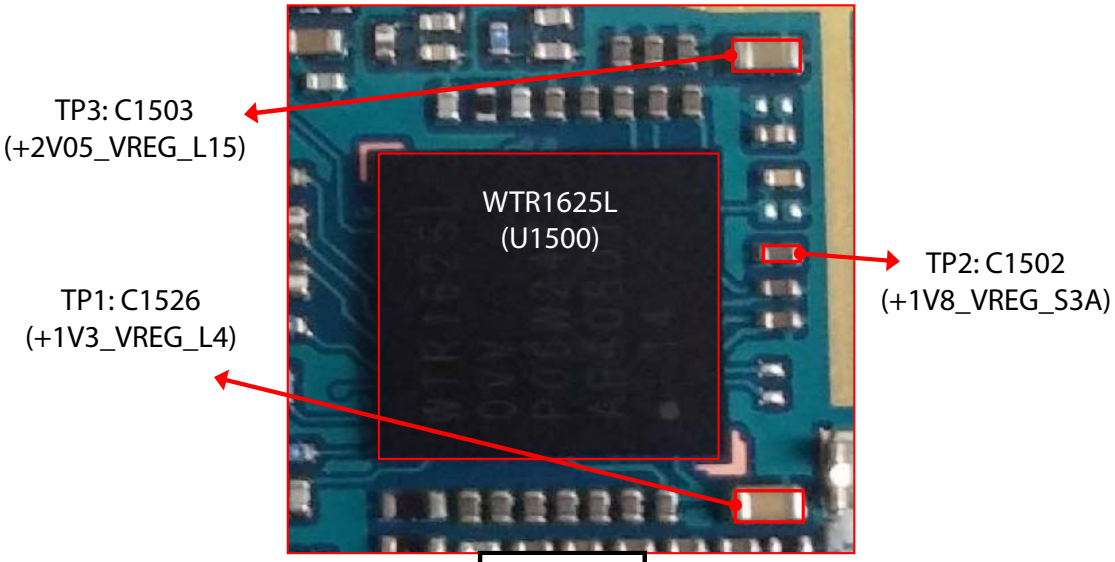

Top Side

Circuit Diagram

+1V3V_VREG_L4 / +1V8_VREG_S3A / +2V05_VREG_L15

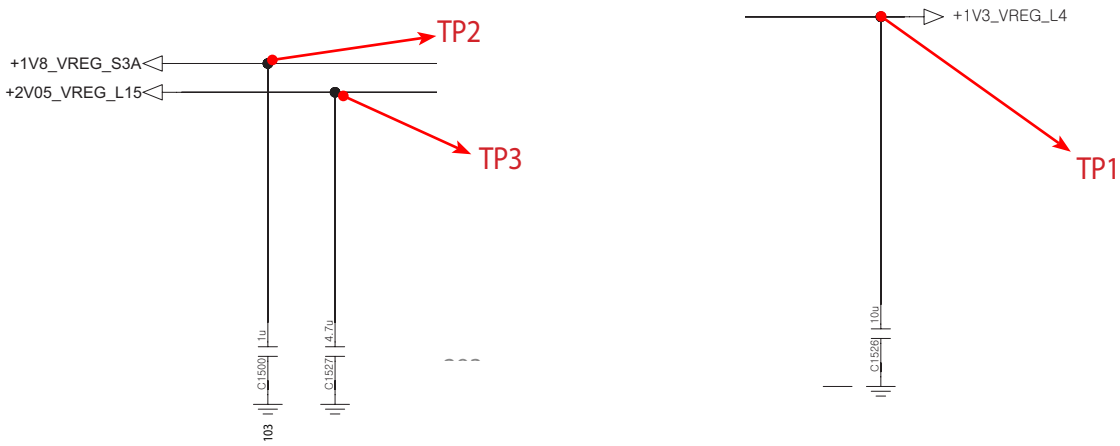

3.4.4.2 Checking WTR1625L XO Circuit

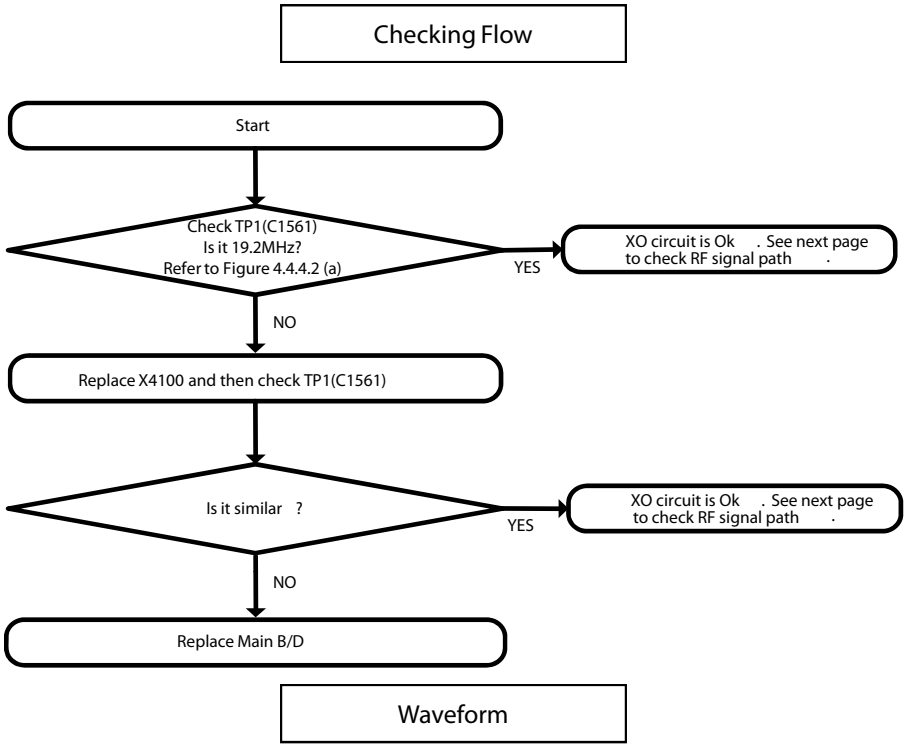

Waveform

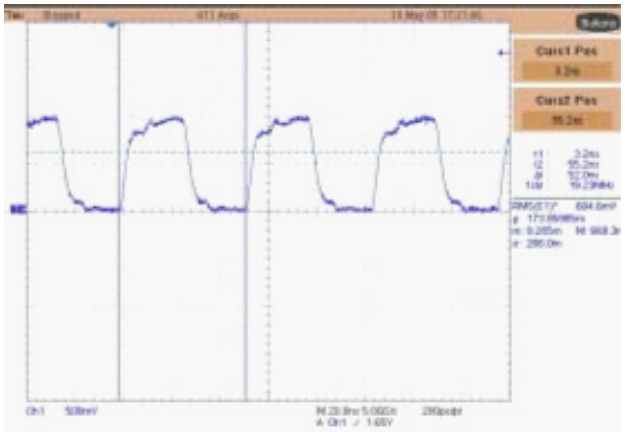

Figure 3.4.4.2 (a)

3.4.4.2 Checking WTR1625L XO Circuit

Test Point

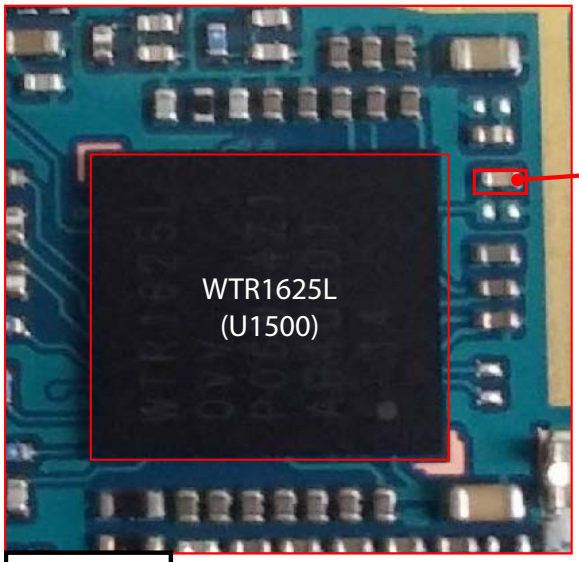

TP1 : C1561
(WTR0_XO_IN)

Top Side

Circuit Diagram

WTR0_XO_IN

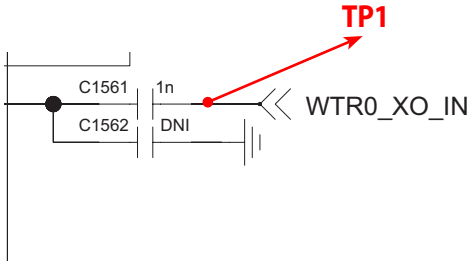

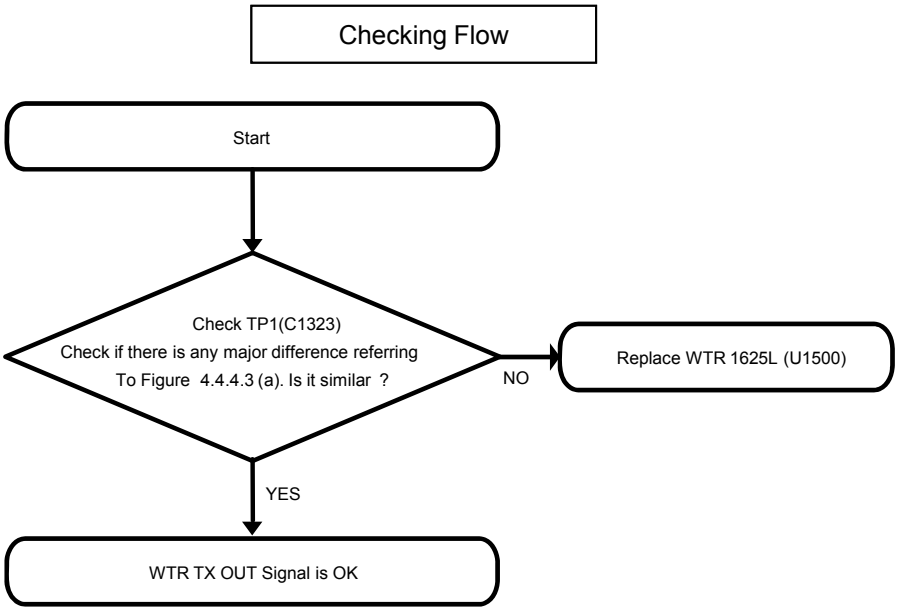

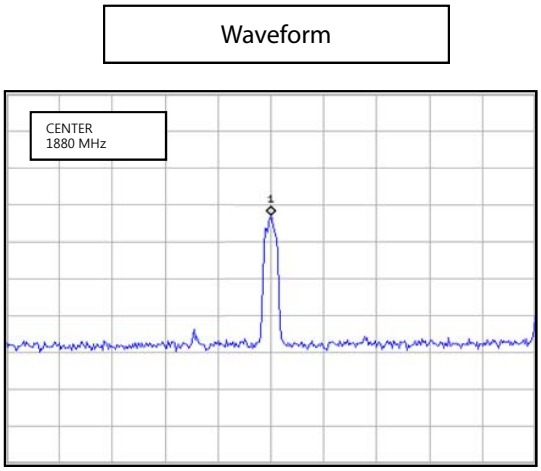

Figure 3.4.4.3 (a)

3.4.4.3 Checking WTR1625L TX Out circuit

Test Point

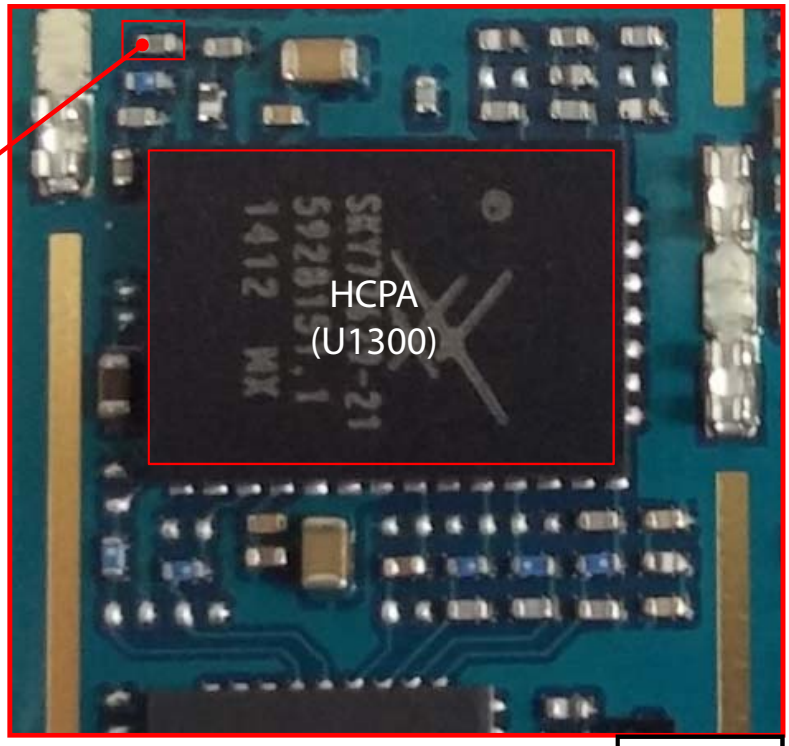

TP1 : C1323
(WTR0_TX_MB2_OUT

Top Side

Circuit Diagram

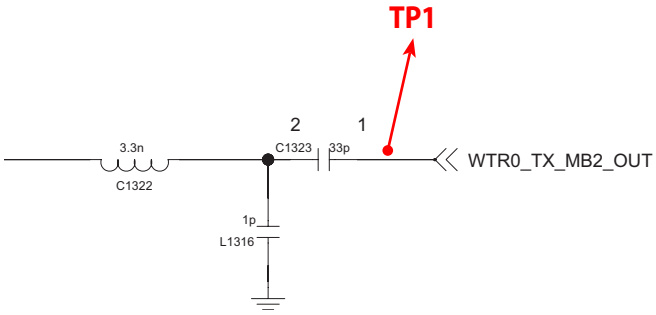

3.4.4.4 Check HCPA Circuit

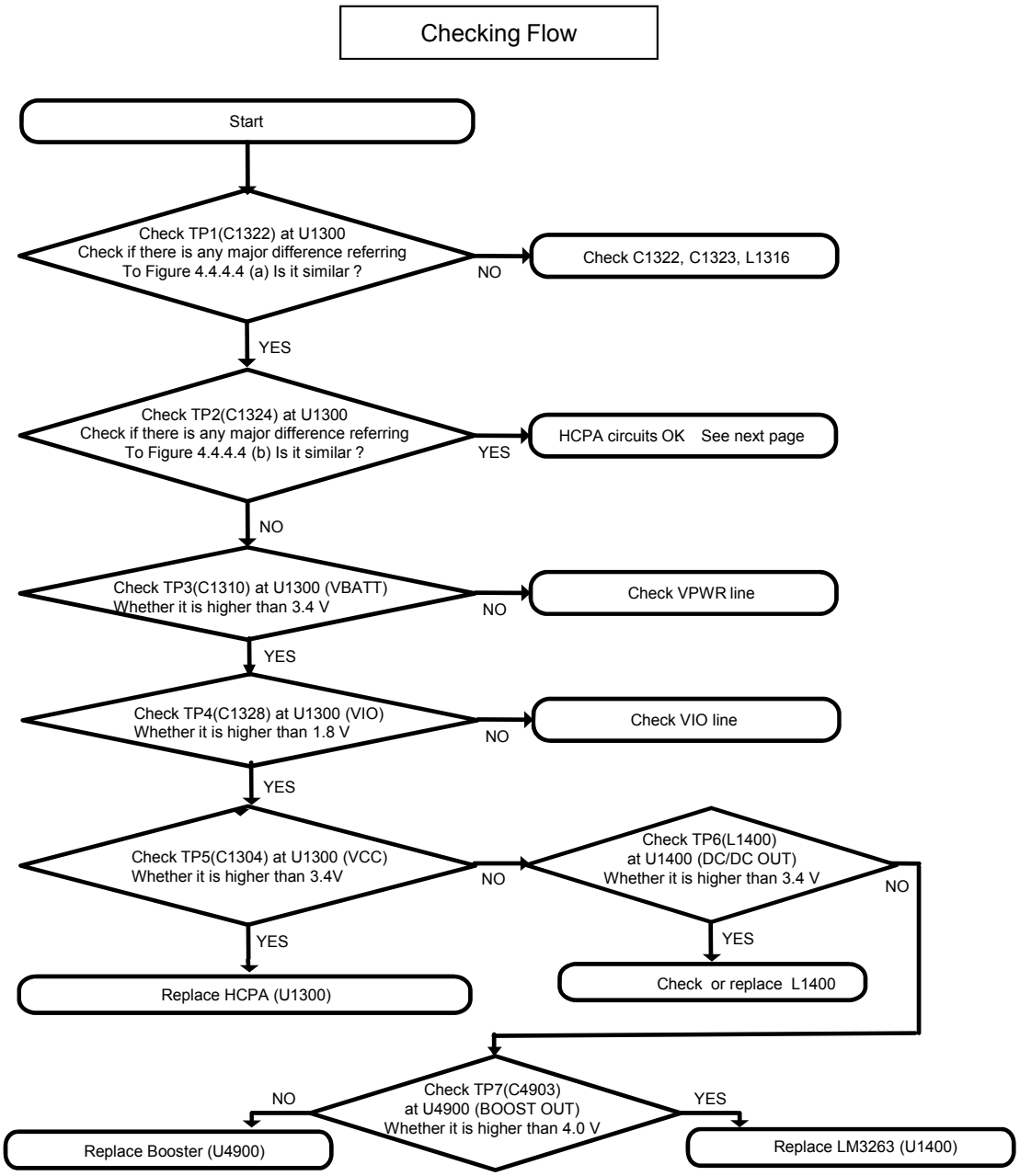

3.4.4.4 Check HCPA Circuit

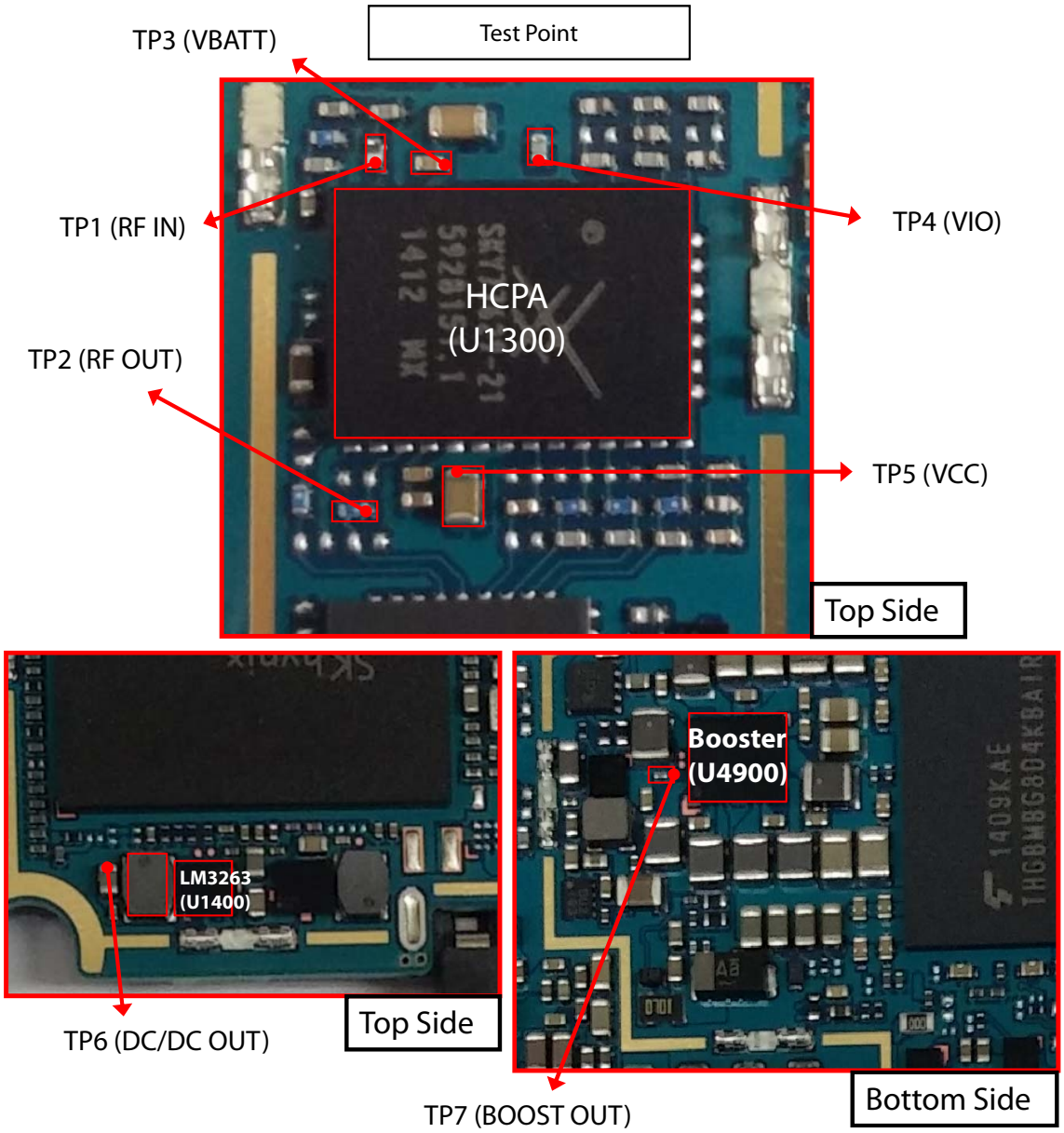

3.4.4.4 Check HCPA Circuit

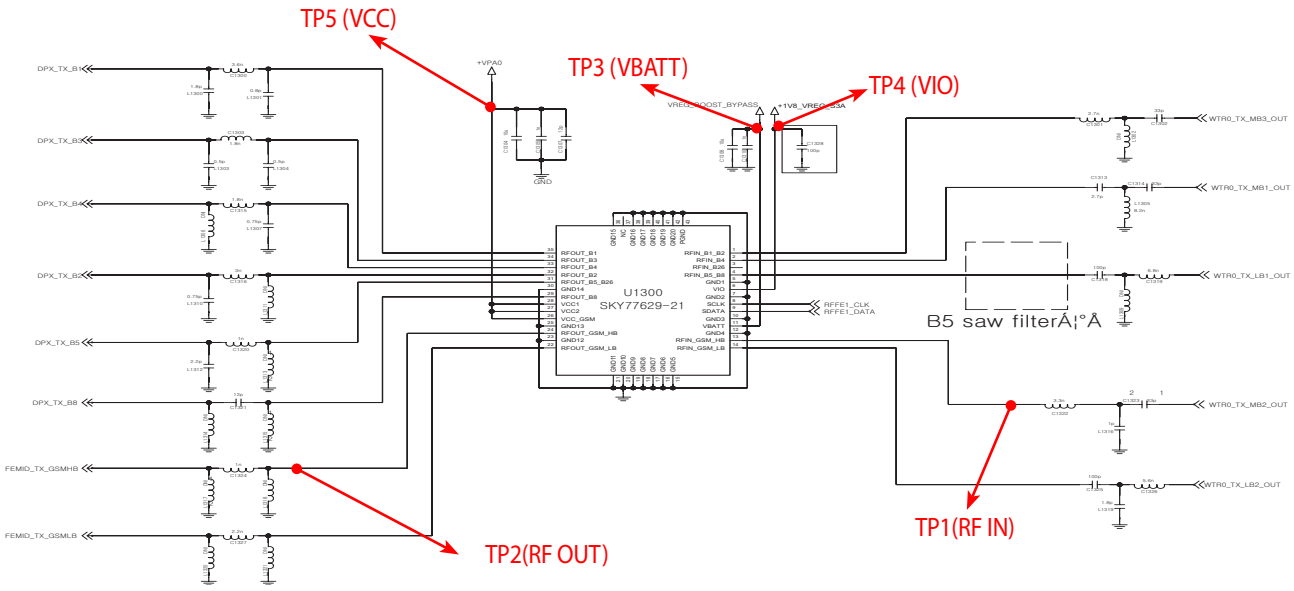

Global_LTE_APT_LM3263

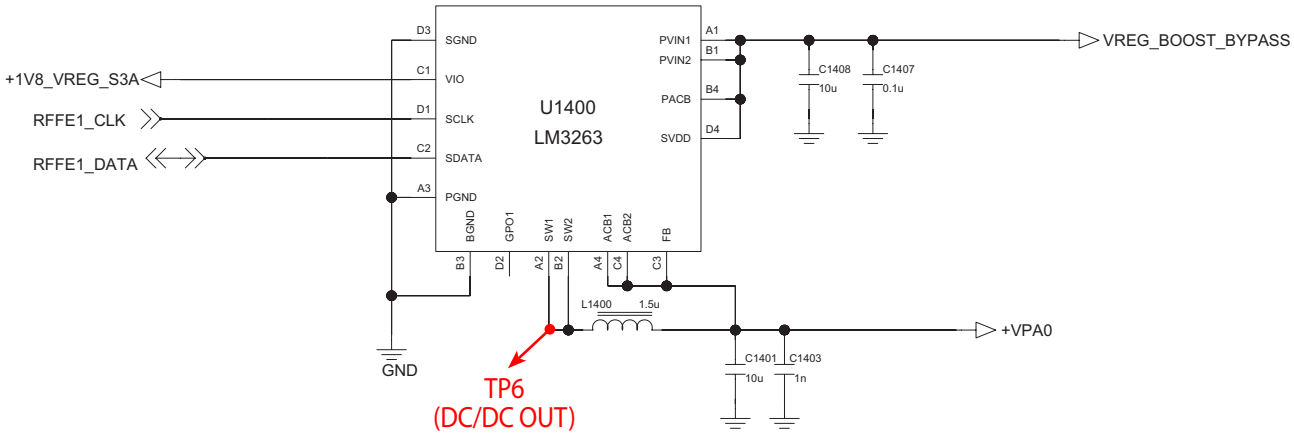

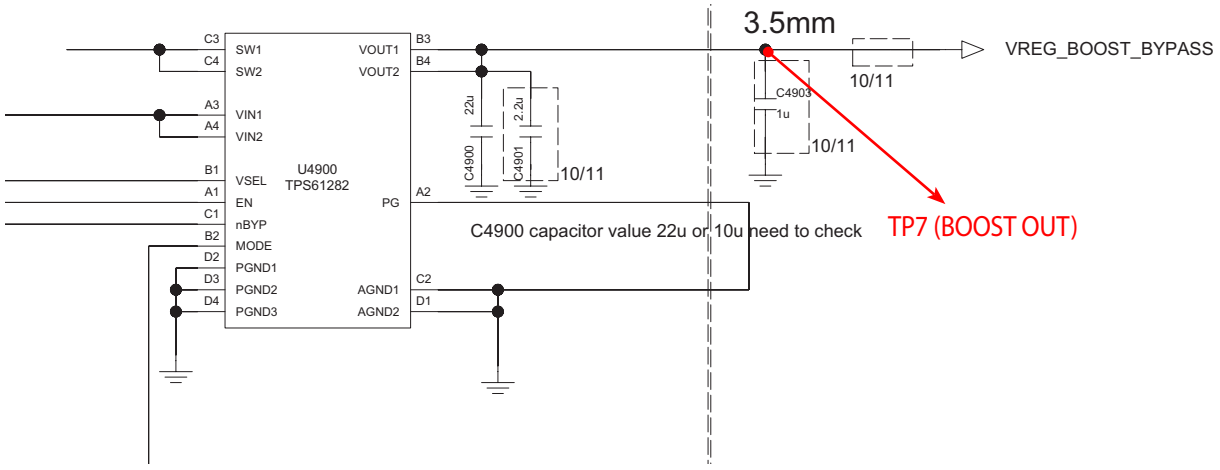

3.4.4.4 Check HCPA Circuit

Waveform

TP1

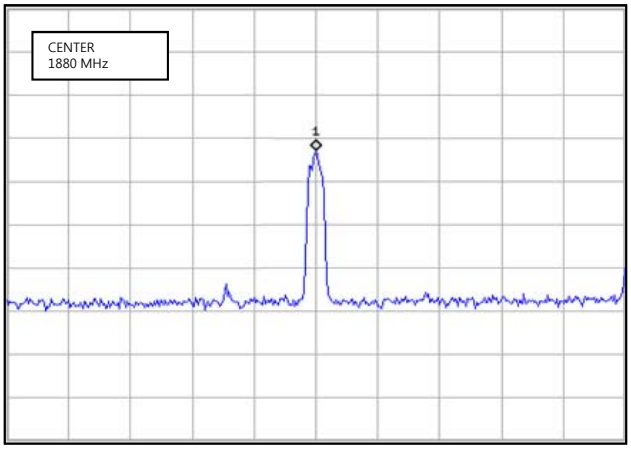

Figure 3.4.4.4(a)

TP2

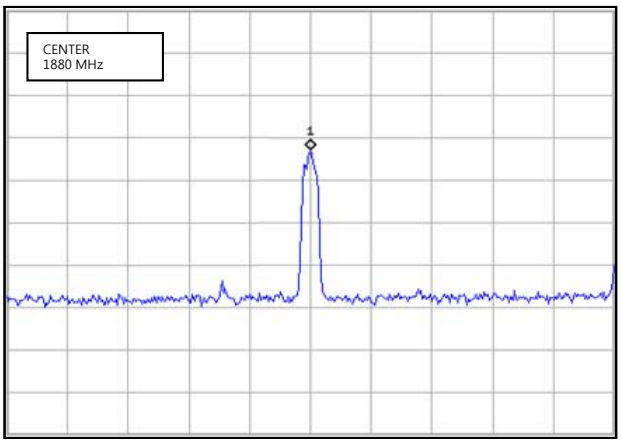

Figure 3.4.4.4(b)

3.4.4.5 Checking RF Signal Path (FEM)

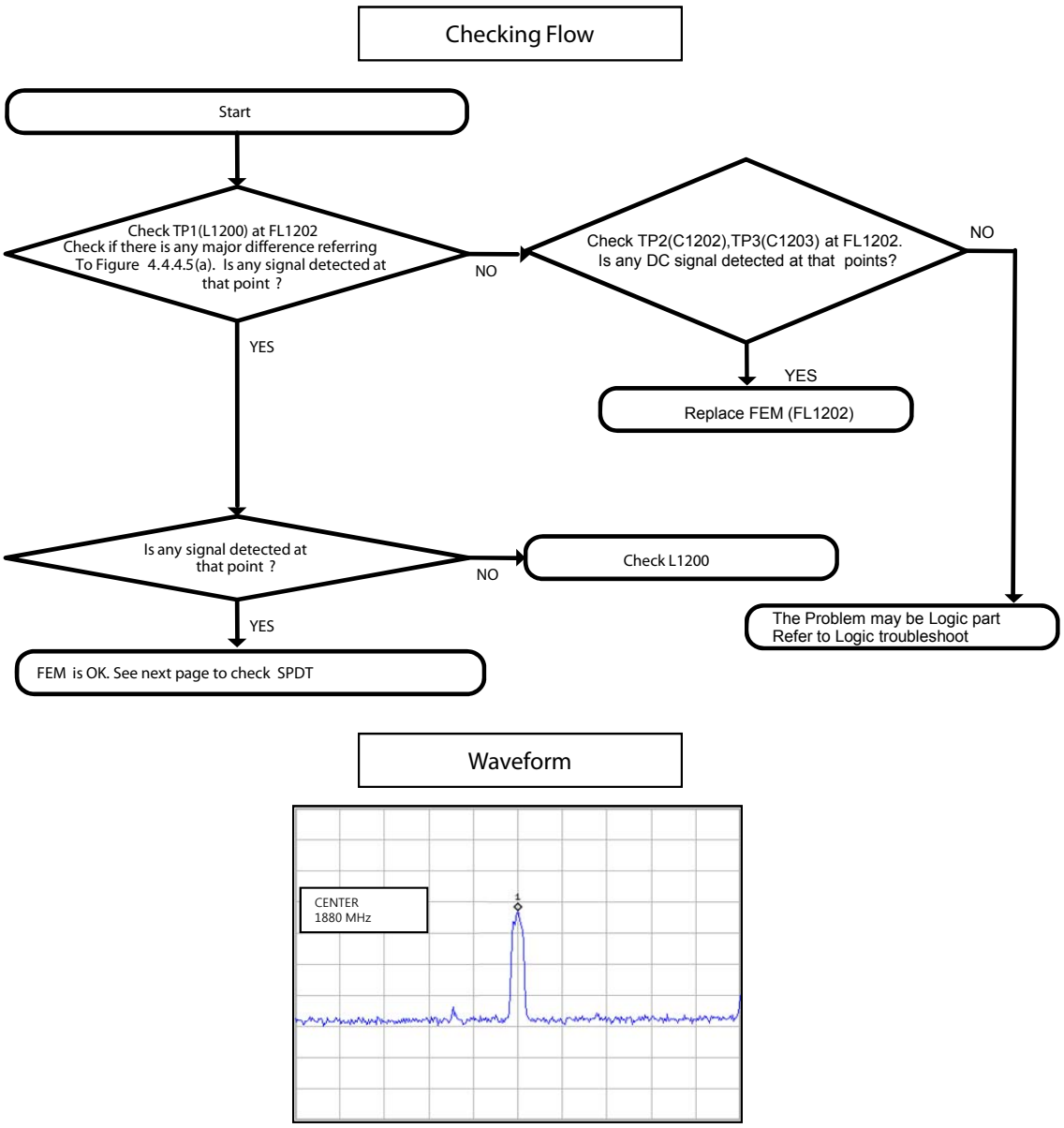

Figure 3.4.4.5(a)

3.4.4.5 Checking RF Signal Path (FEM)

Test Point

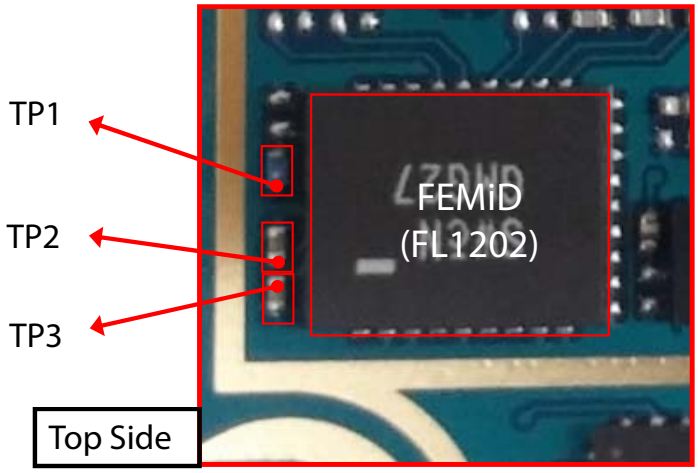

Circuit Diagram

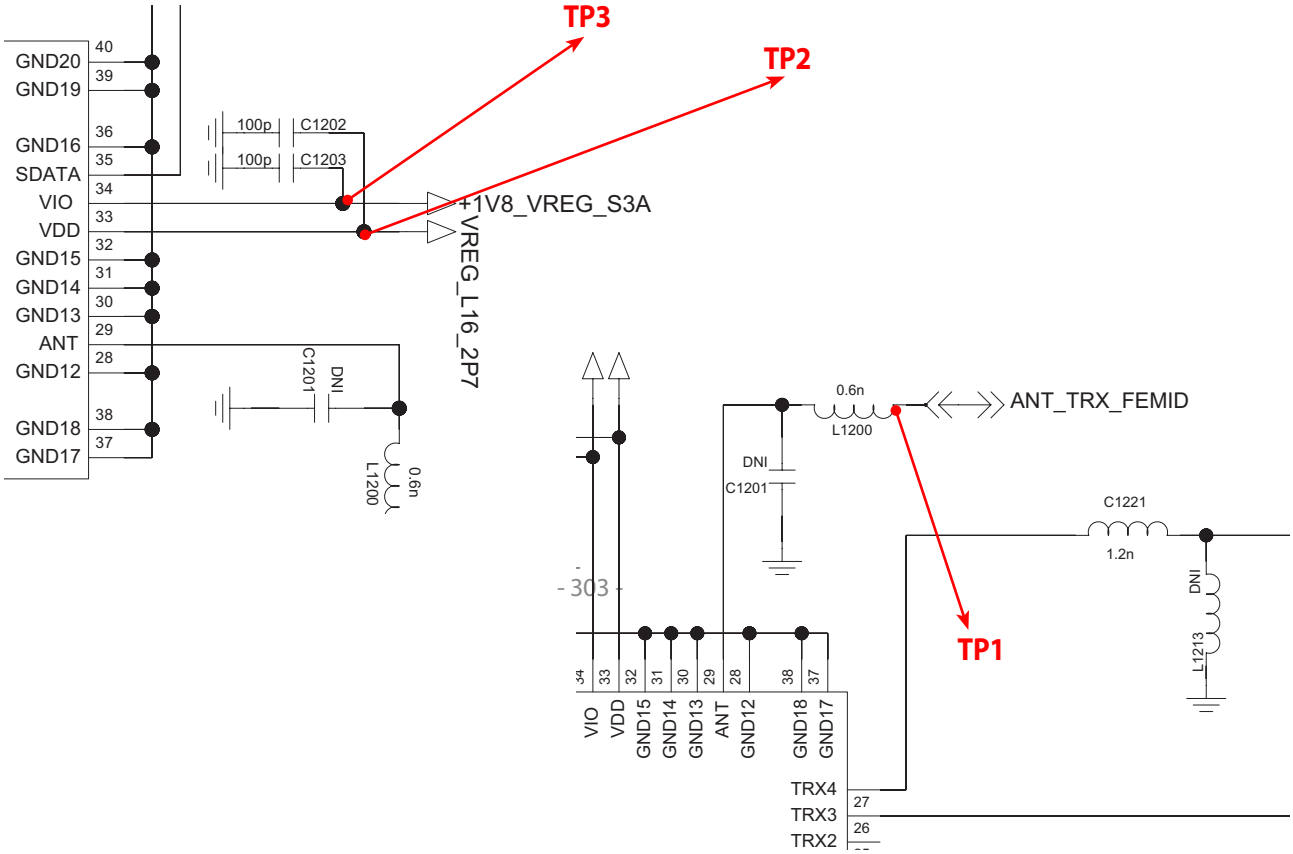

3.4.4.6 Checking RF Signal Path (SPDT)

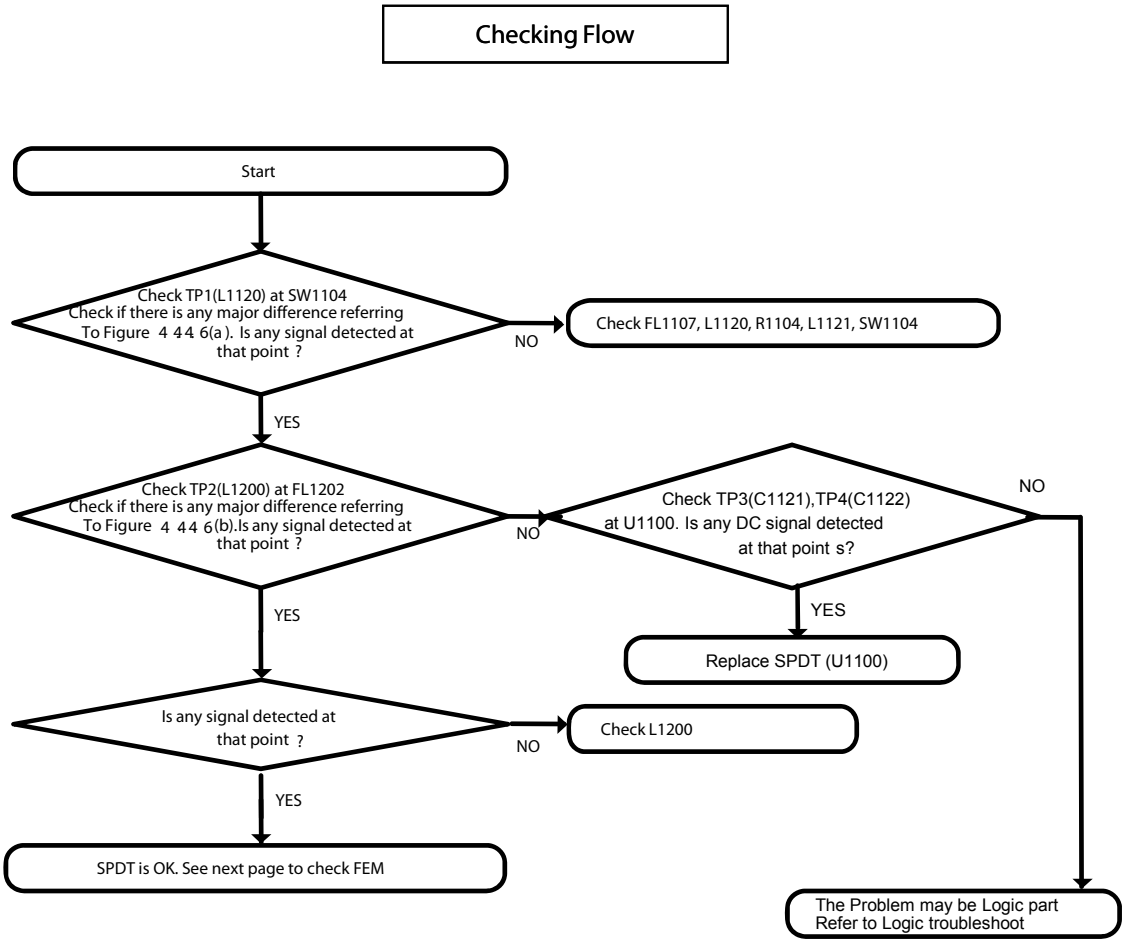

3.4.4.6 Checking RF Signal Path (SPDT)

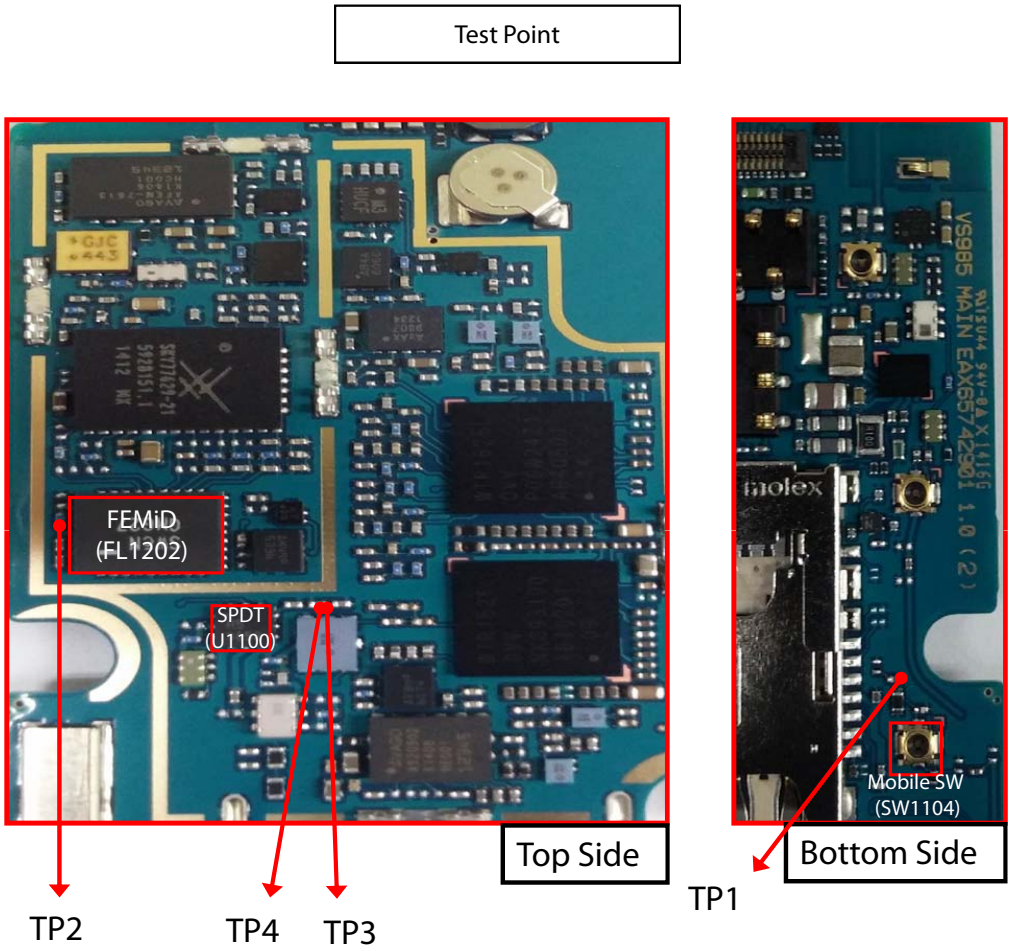

3.4.4.6 Checking RF Signal Path (SPDT)

Circuit Diagram

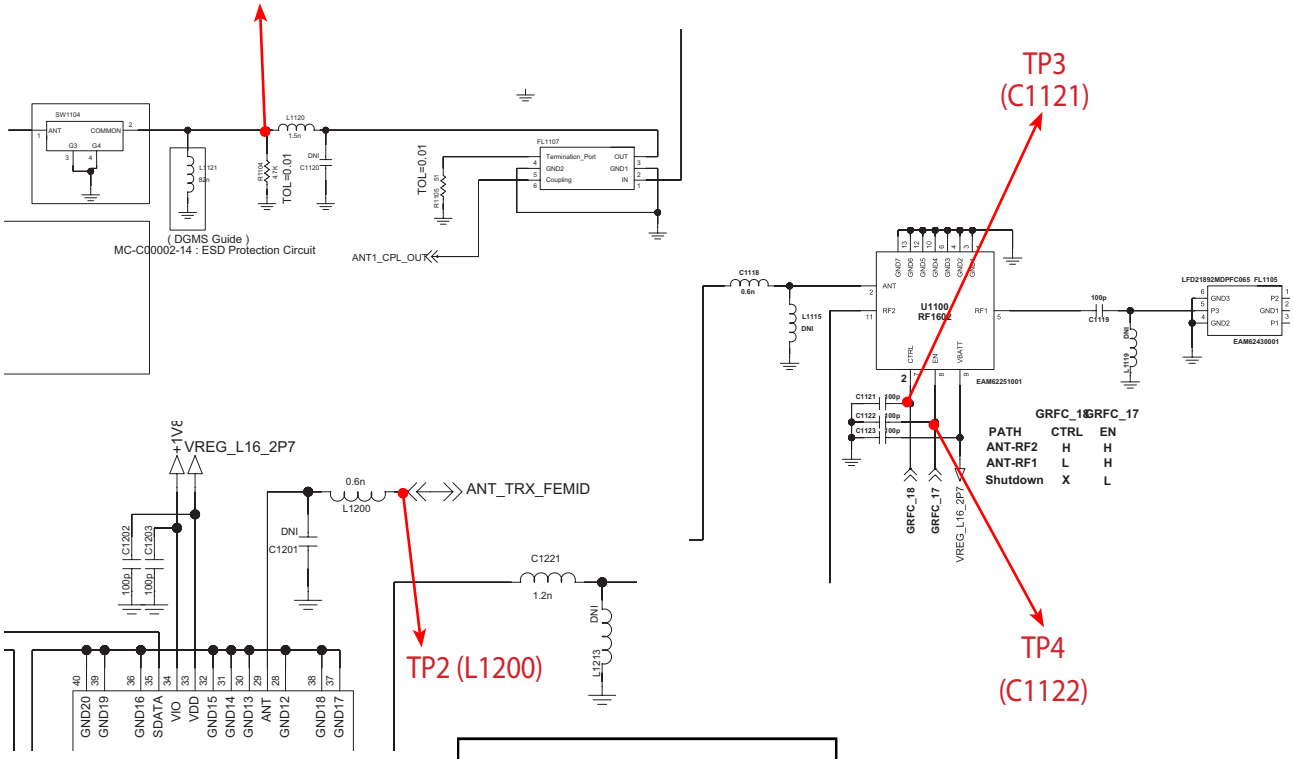

Waveform

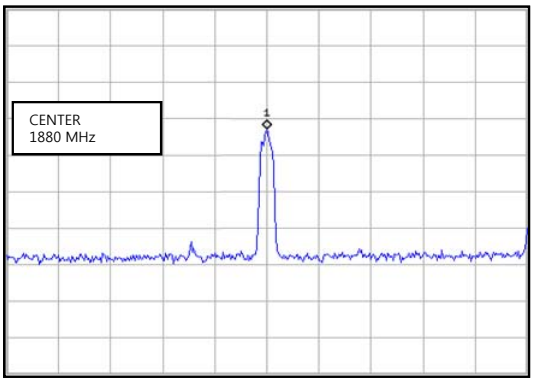

Figure 3.4.4.6(a)

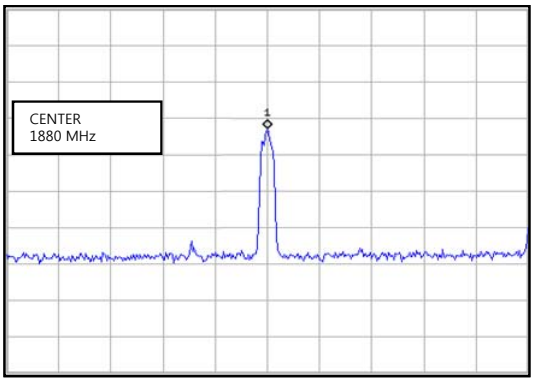

Figure 3.4.4.6(b)

3. 5. LTE Part

3. 5. 1. LTE RF part

3. 5. 1. 1. LTE B13

Check flow

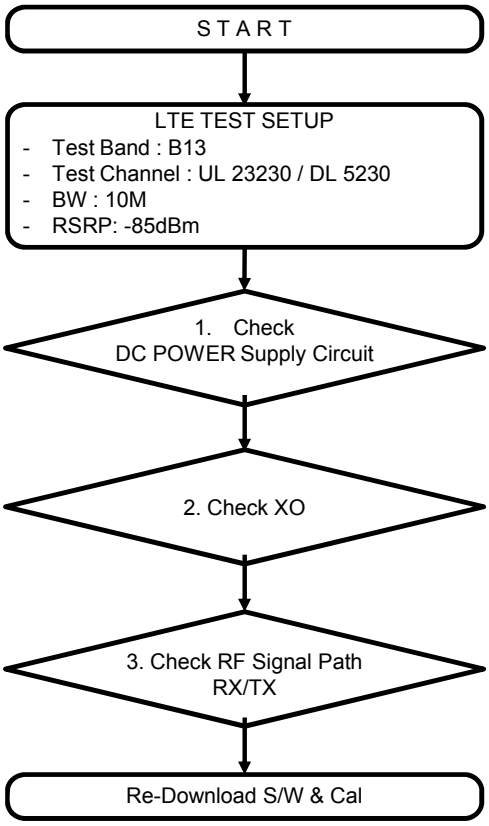

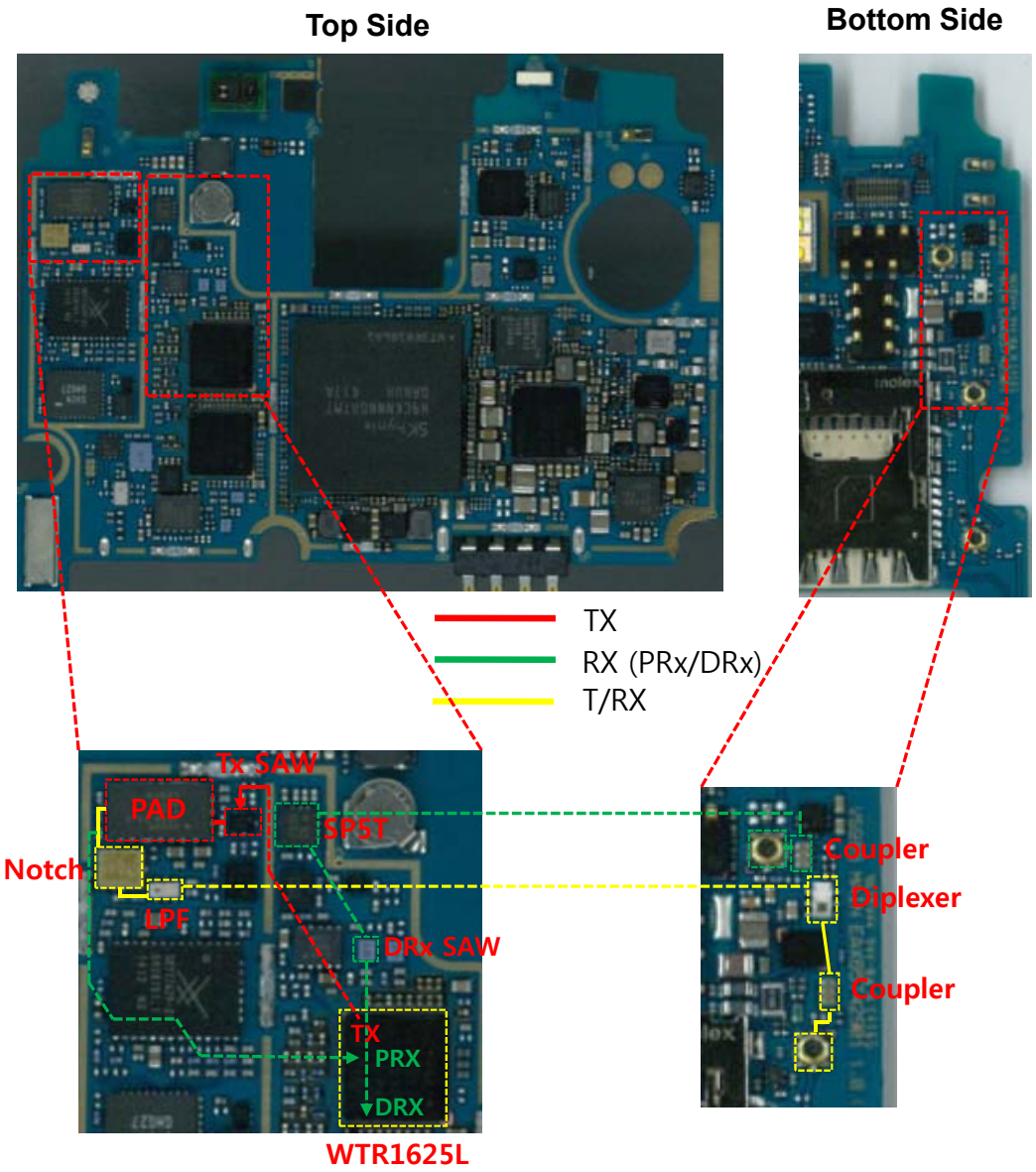

3. 5. 1. 2. LTE B4

Check flow

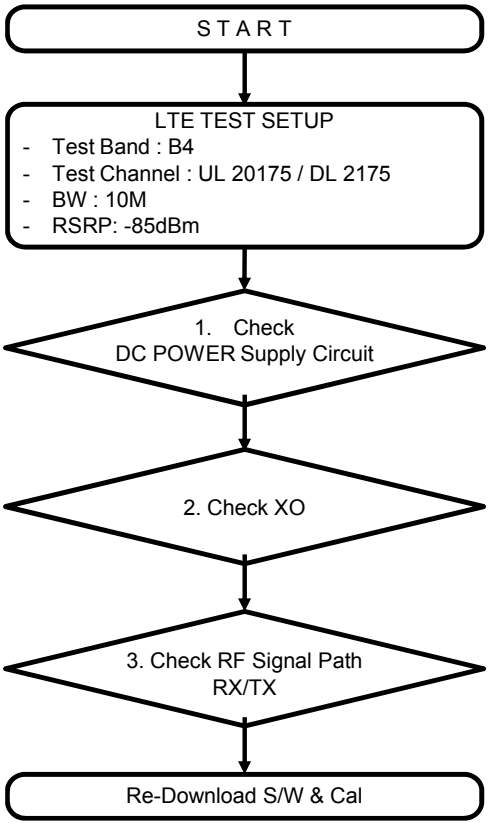

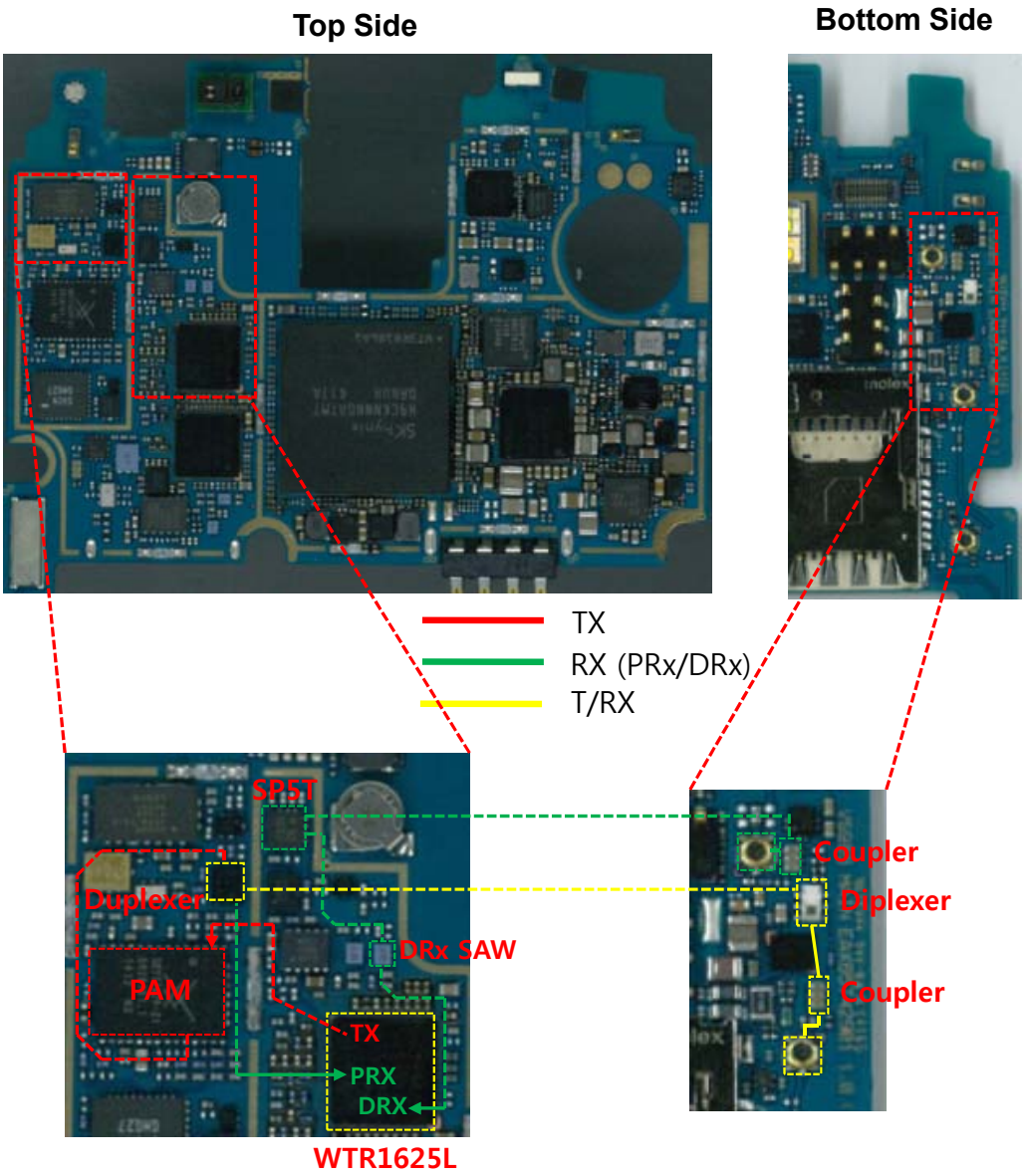

3. 5. 1. 3. LTE B3

Check flow

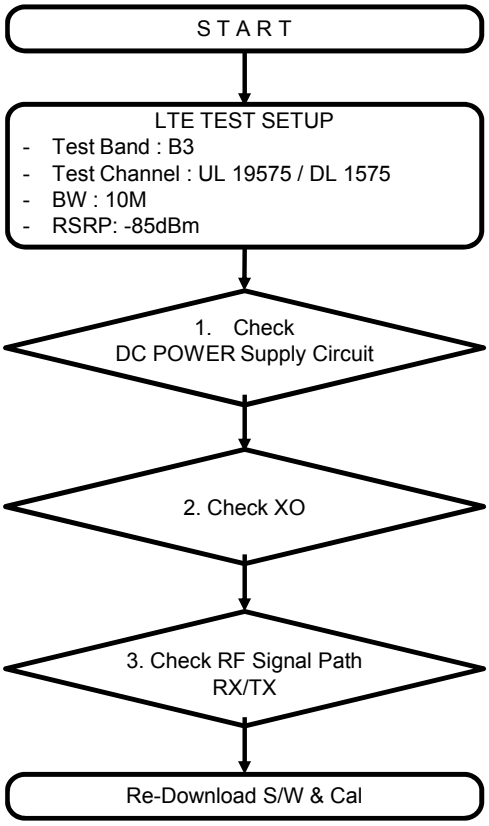

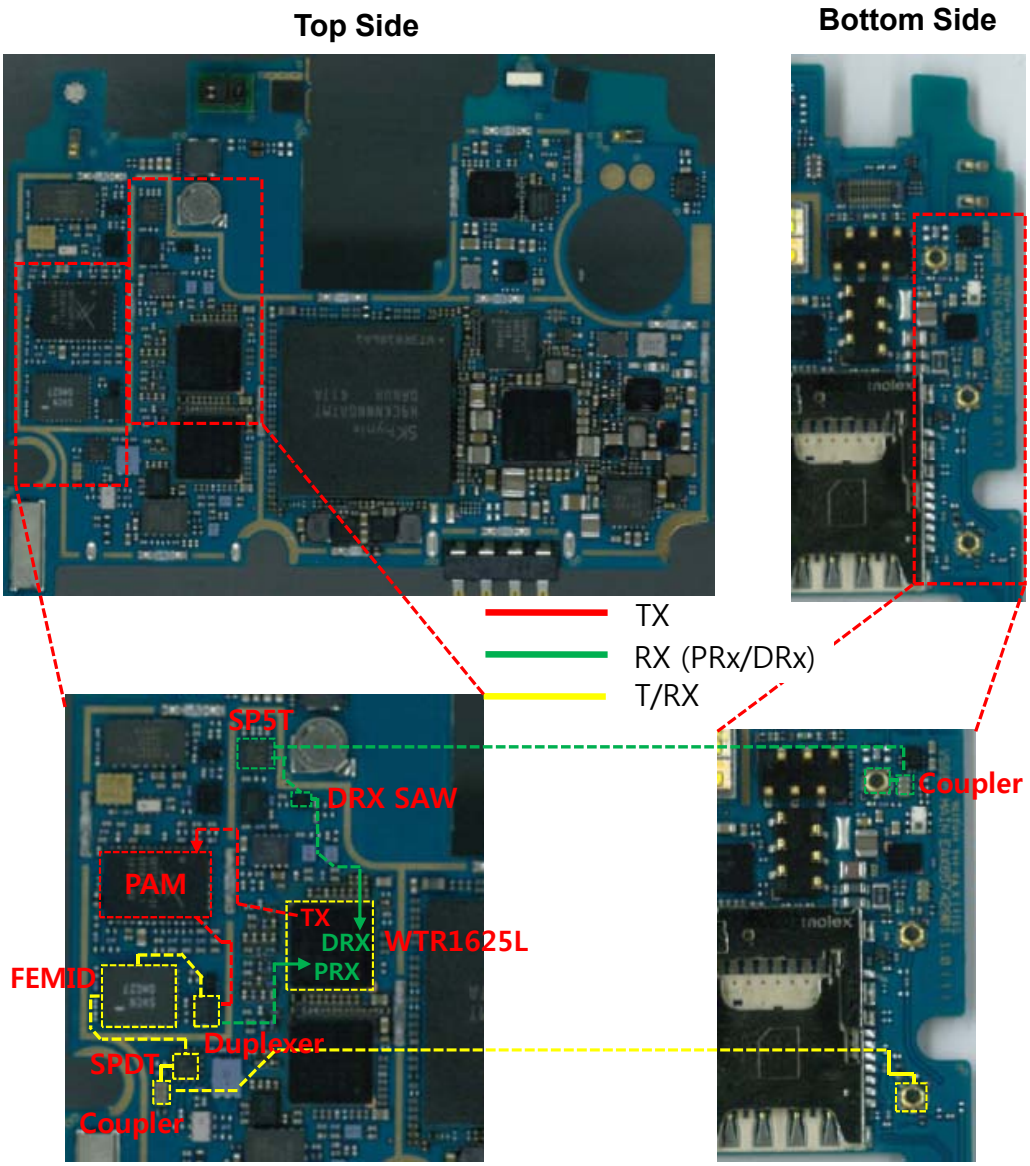

3. 5. 1. 4. LTE B7

Check flow

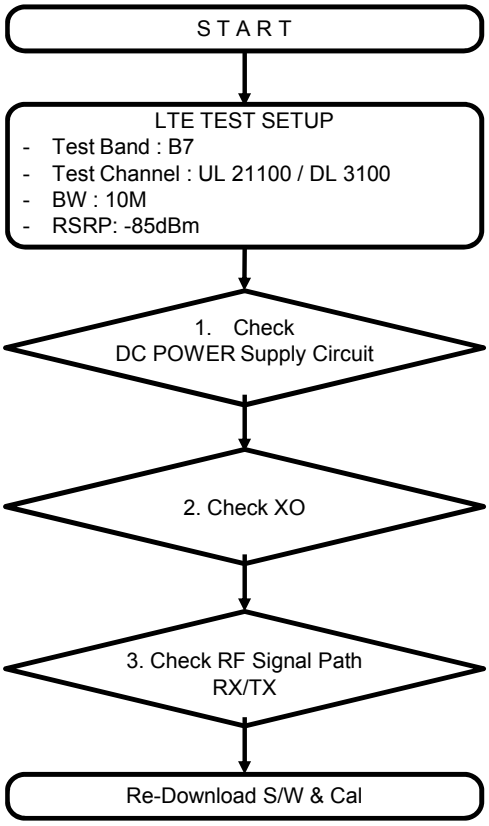

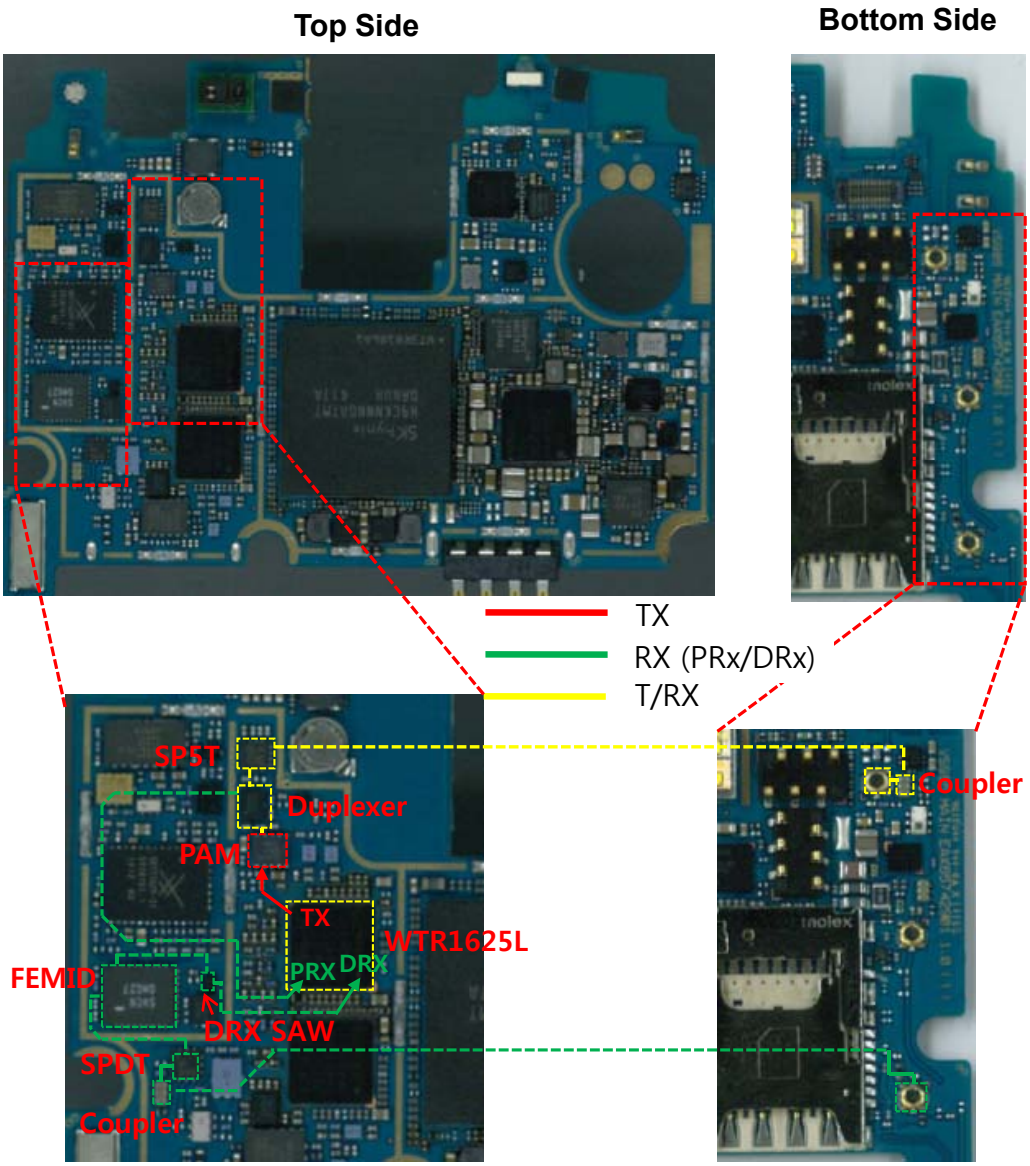

3. 5. 2. Checking DC Power supply circuit (WTR1625L)

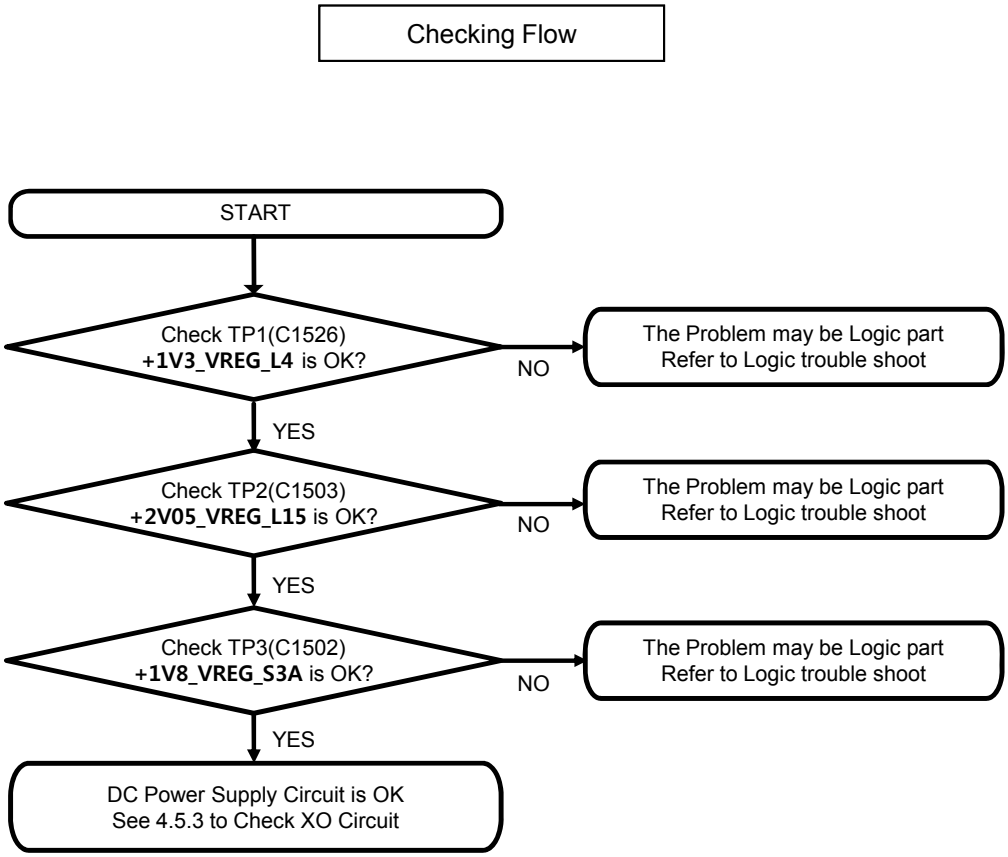

Test Point

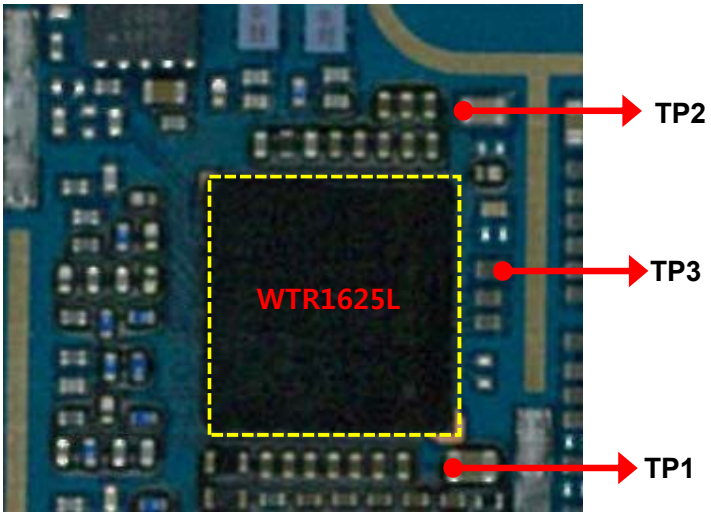

Top Side

Circuit Diagram

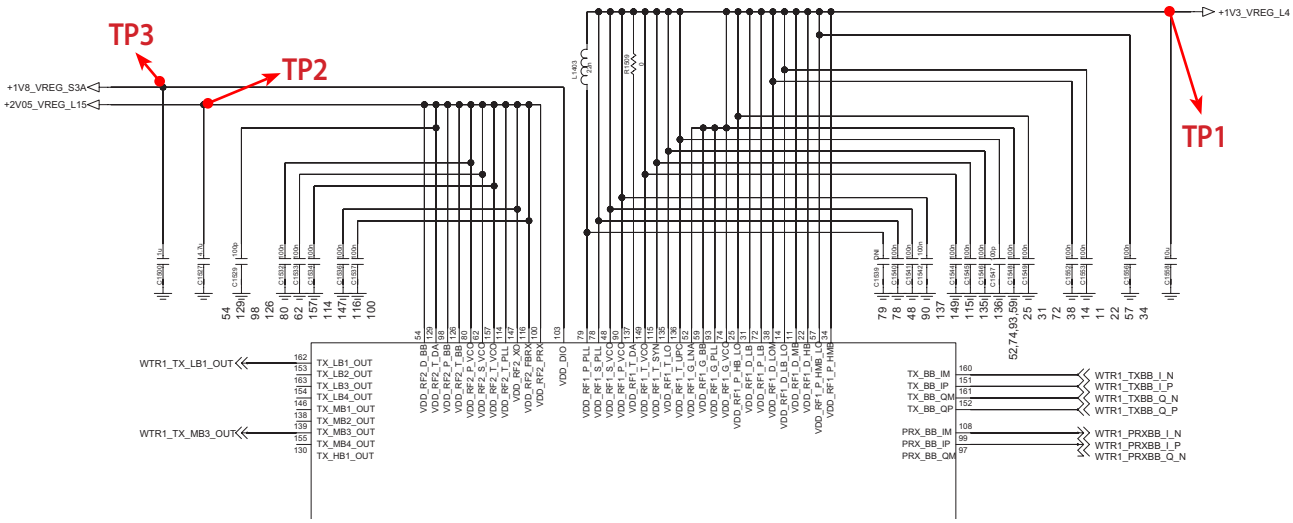

3. 5. 3. Checking WTR XO circuit (WTR1625L)

Checking Flow

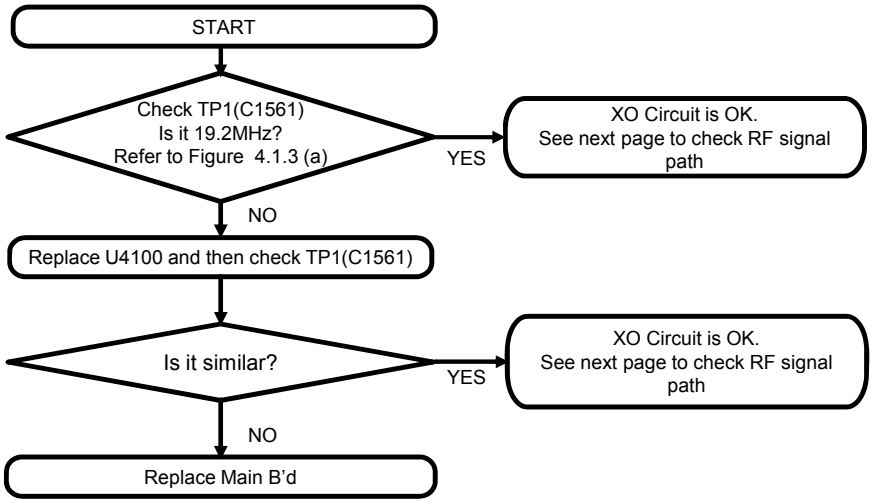

Waveform

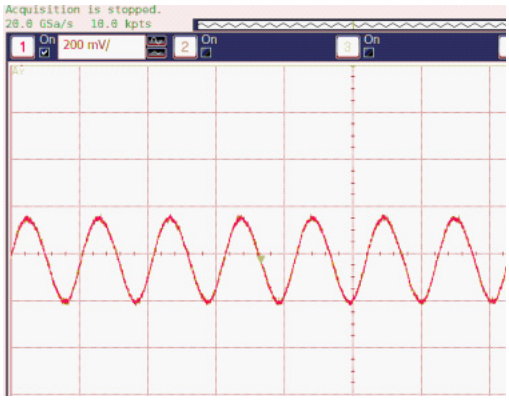

Figure 3.1.3(a)

Test Point

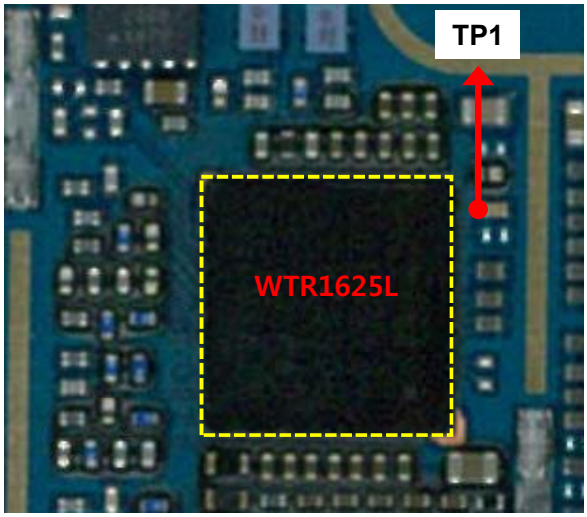

Top Side

Circuit Diagram

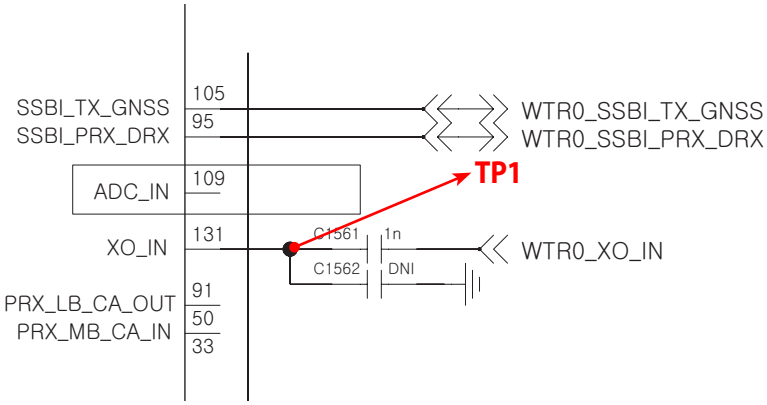

3. 5. 4. LTE B13 Rx

3. 5. 4. 1. LTE B13 RX-PRx

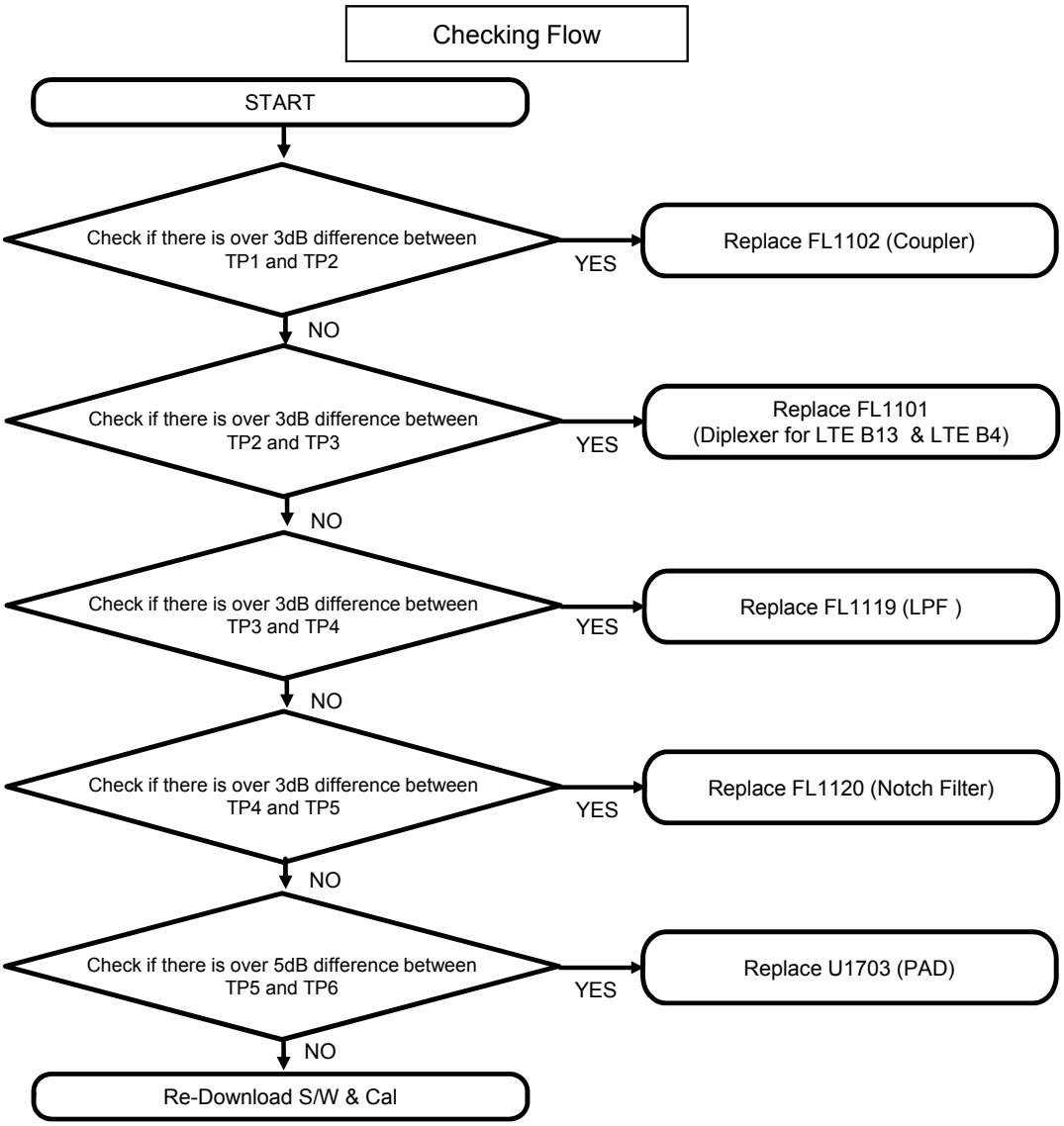

Test Point

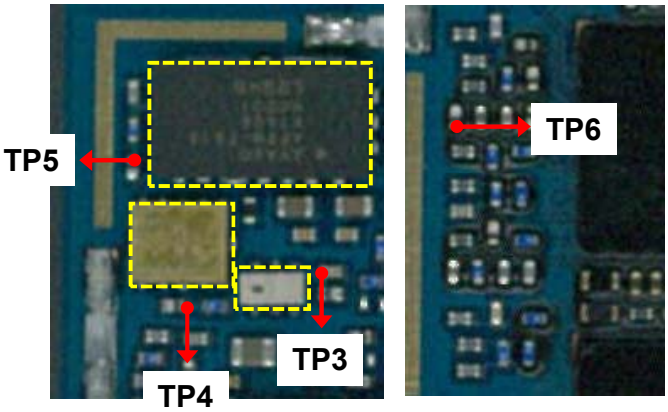

Top Side

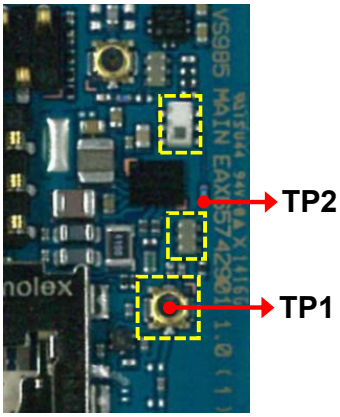

Bottom Side

Circuit Diagram

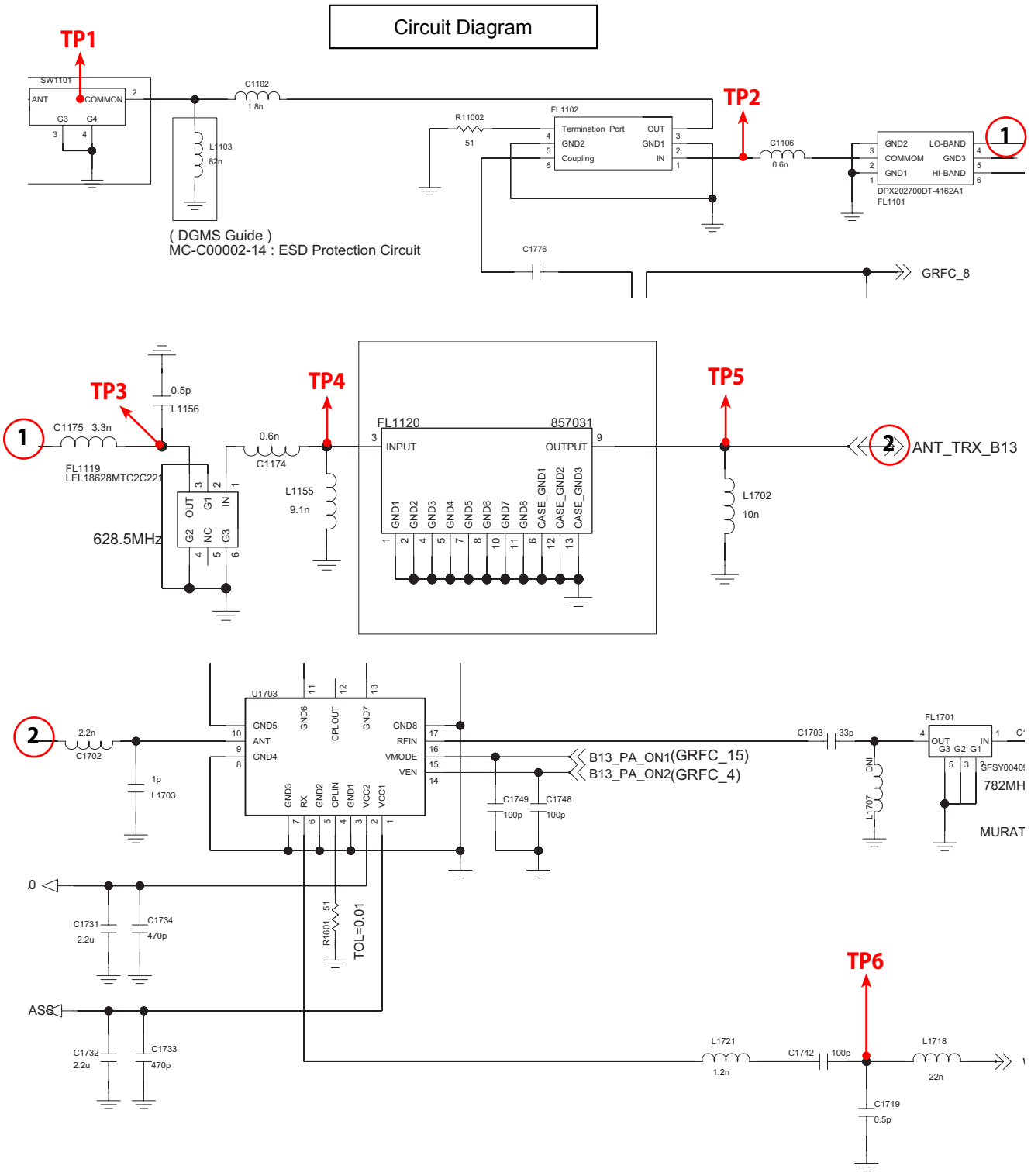

3. 5. 4. 2. LTE B13 RX-DRx

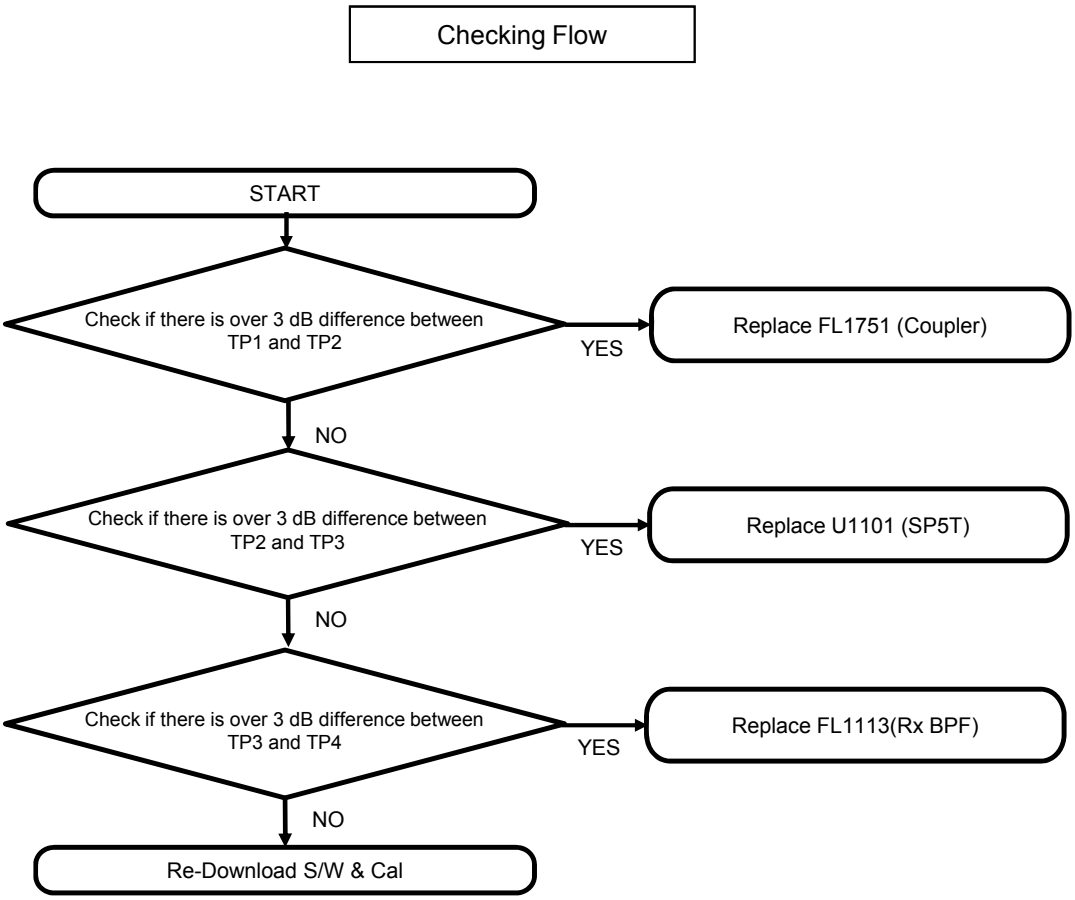

Test Point

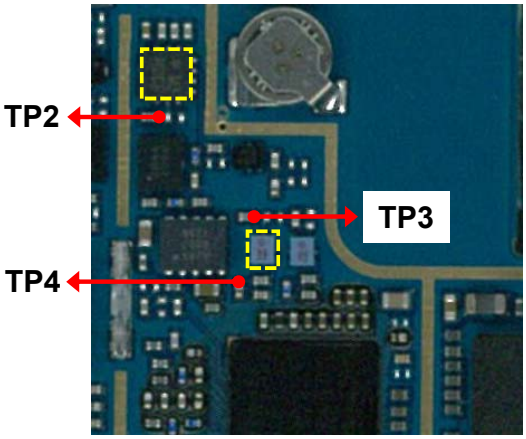

Top Side

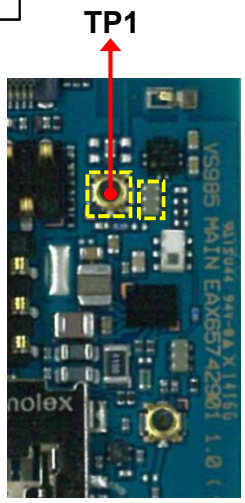

Bottom Side

Circuit Diagram

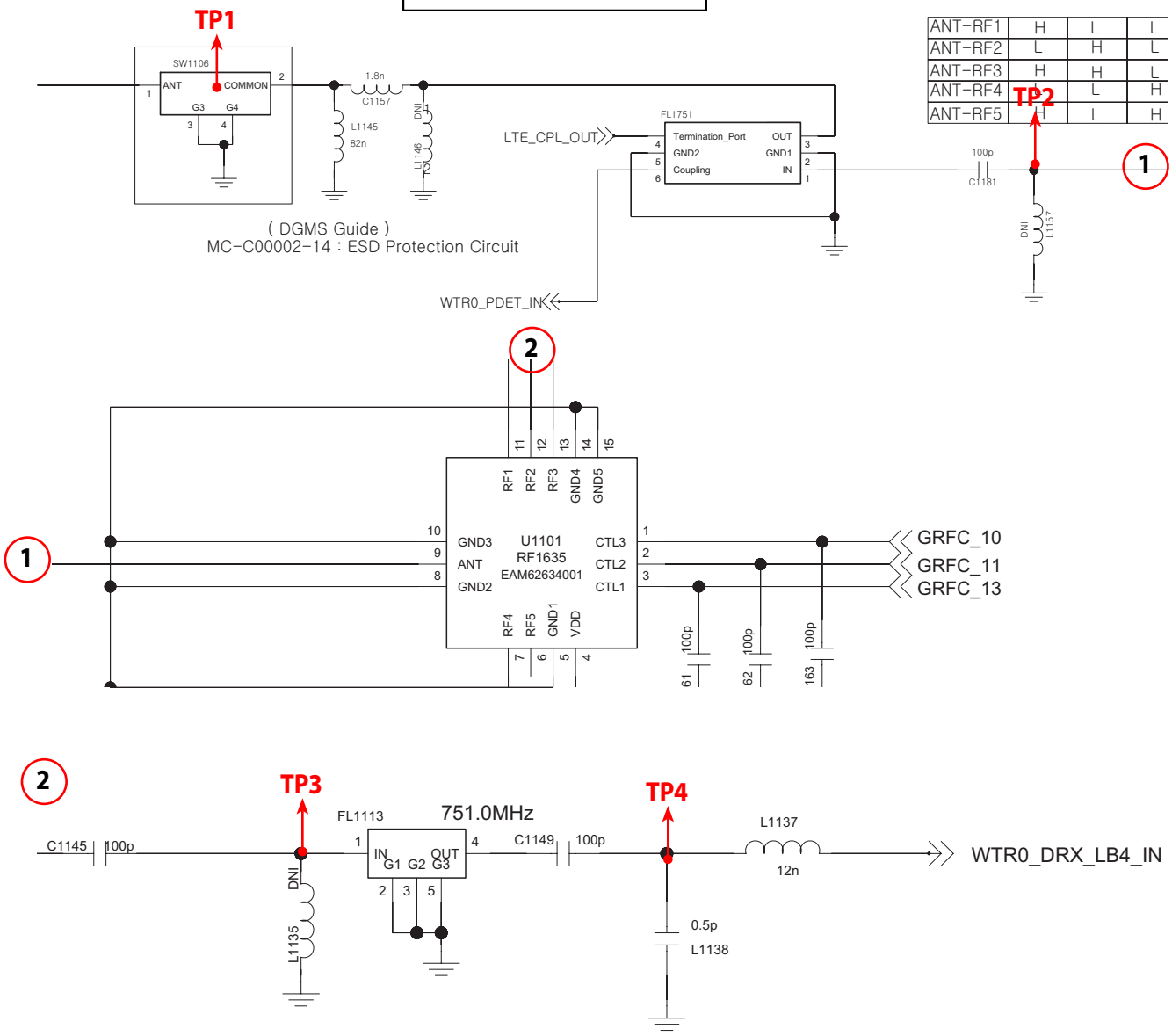

ANT-RF1	H	L	L
ANT-RF2	L	H	L
ANT-RF3	H	H	L
ANT-RF4	H	L	H
ANT-RF5	H	L	H

3. 5. 5. LTE B4 Rx

3. 5. 5. 1. LTE B4 RX-PRx

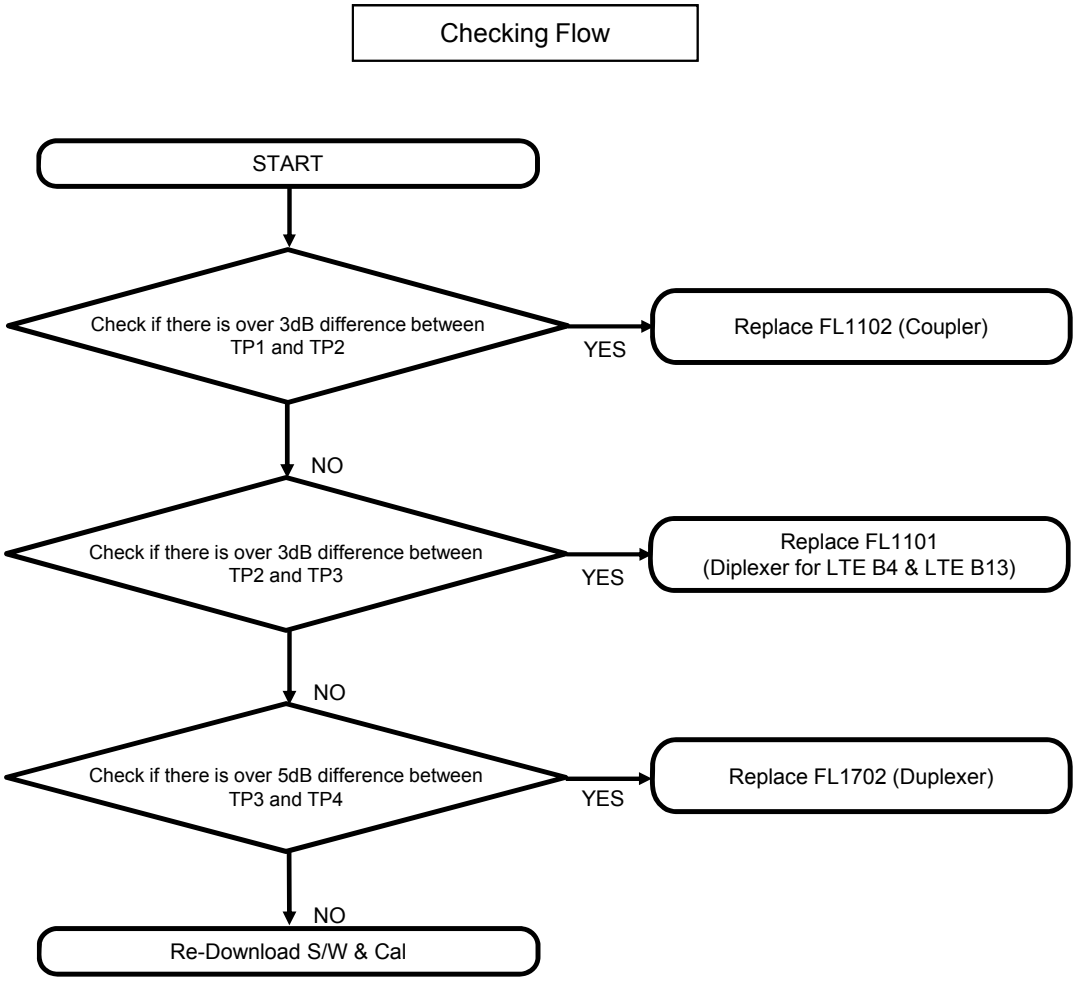

Test Point

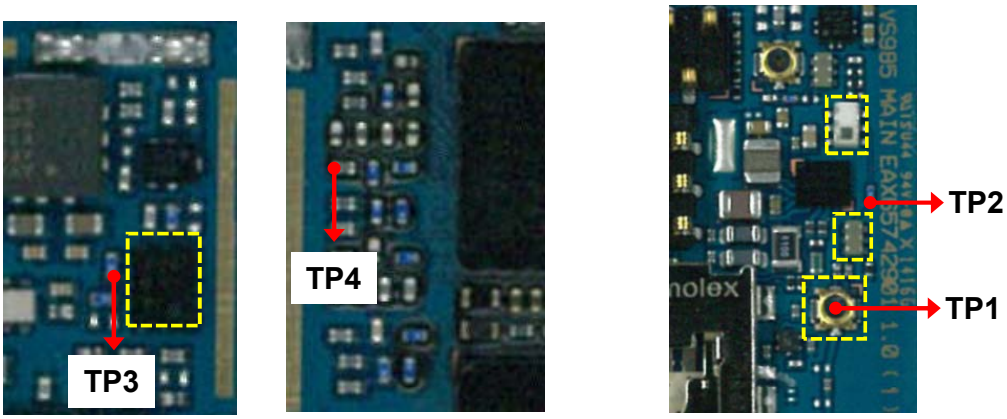

Top Side **Bottom Side**

Circuit Diagram

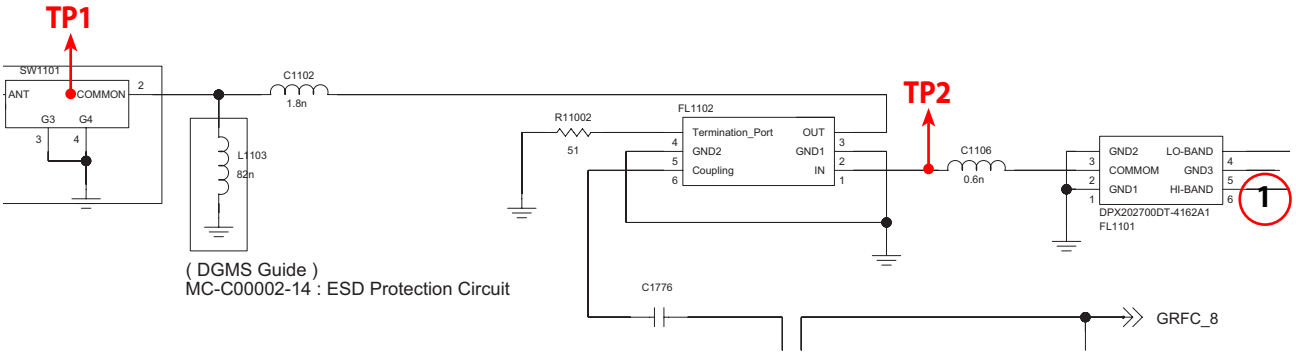

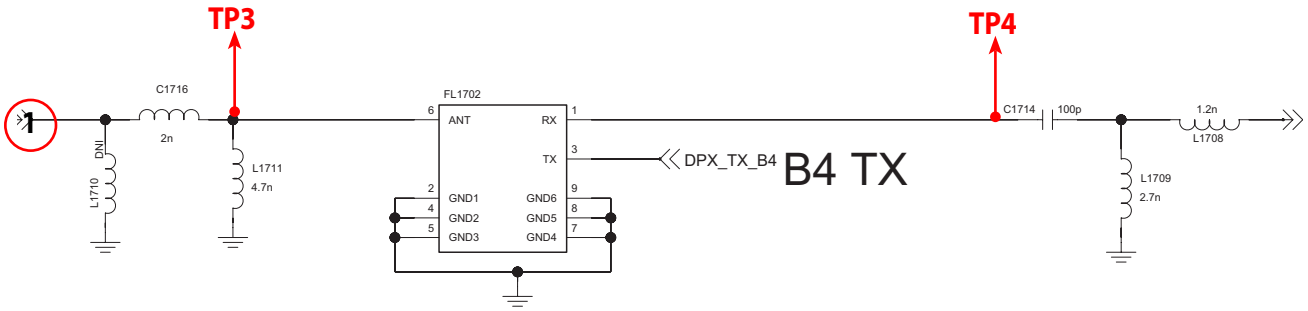

3. 5. 5. 2. LTE B4 RX-DRx

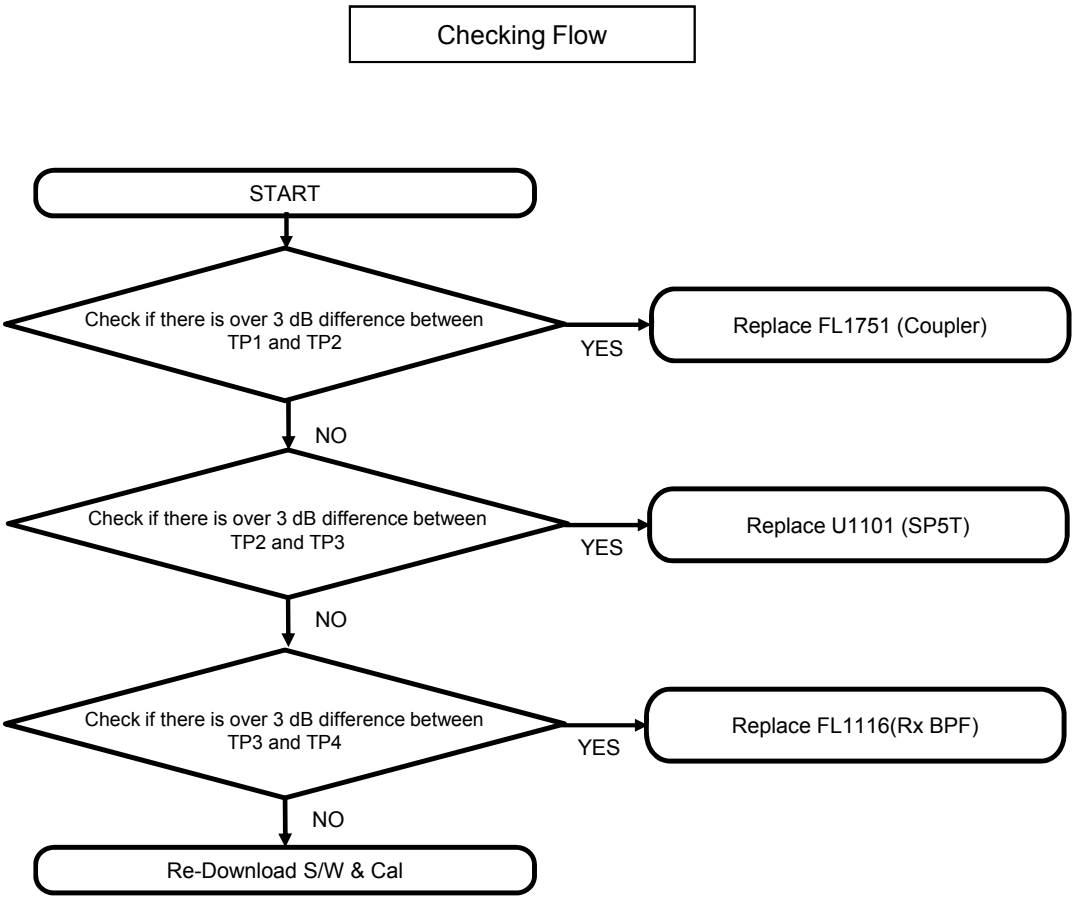

Test Point

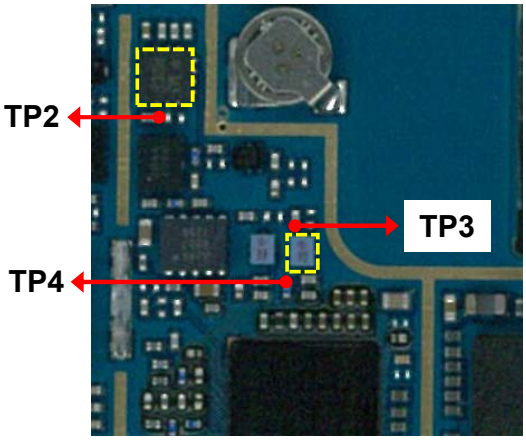

Top Side

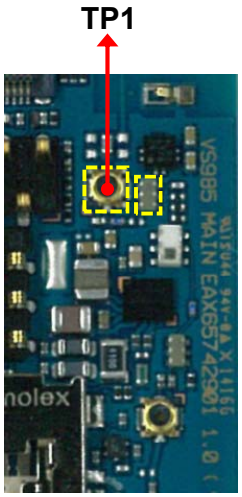

Bottom Side

Circuit Diagram

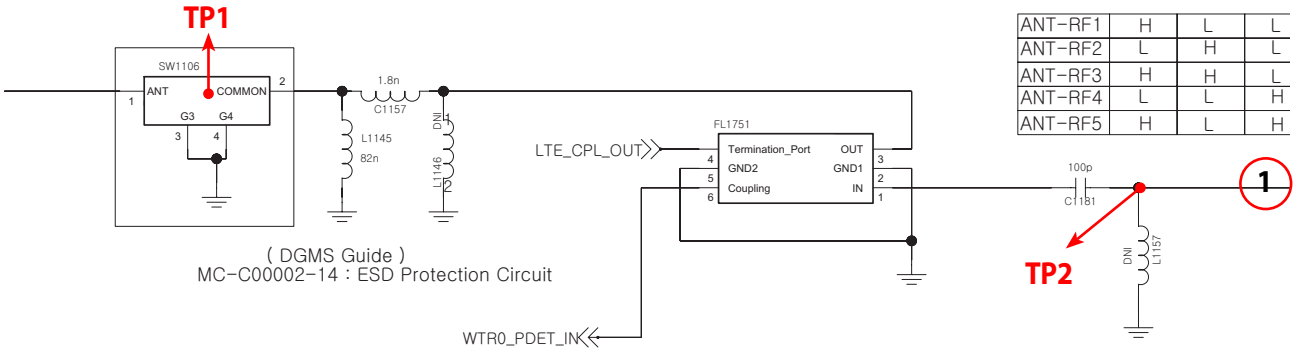

ANT-RF1	H	L	L
ANT-RF2	L	H	L
ANT-RF3	H	H	L
ANT-RF4	L	L	H
ANT-RF5	H	L	H

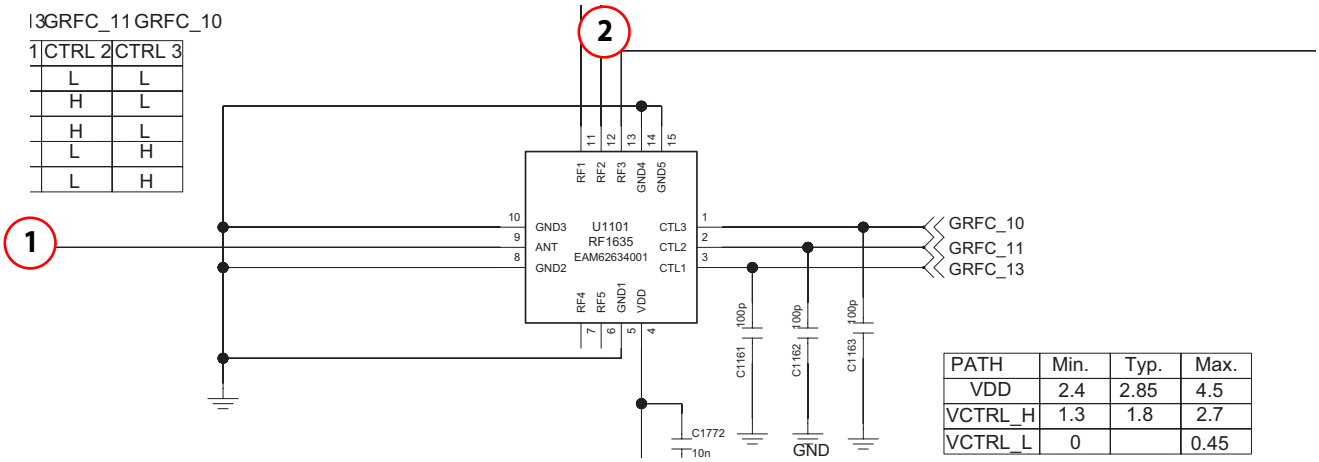

CTRL 2	CTRL 3
L	L
H	L
H	L
L	H
L	H

PATH	Min.	Typ.	Max.
VDD	2.4	2.85	4.5
VCTRL_H	1.3	1.8	2.7
VCTRL_L	0		0.45

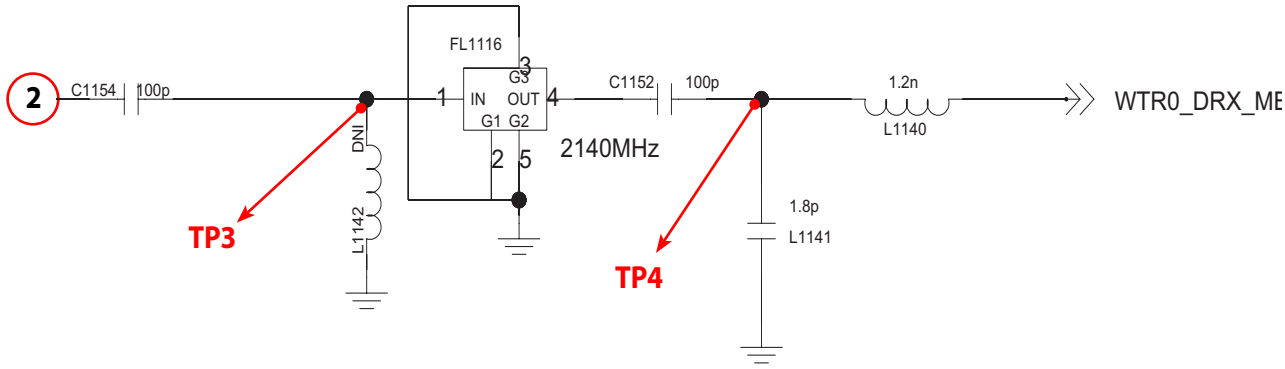

3. 5. 6. LTE B3 Rx

3. 5. 6. 1. LTE B3 RX- PRx

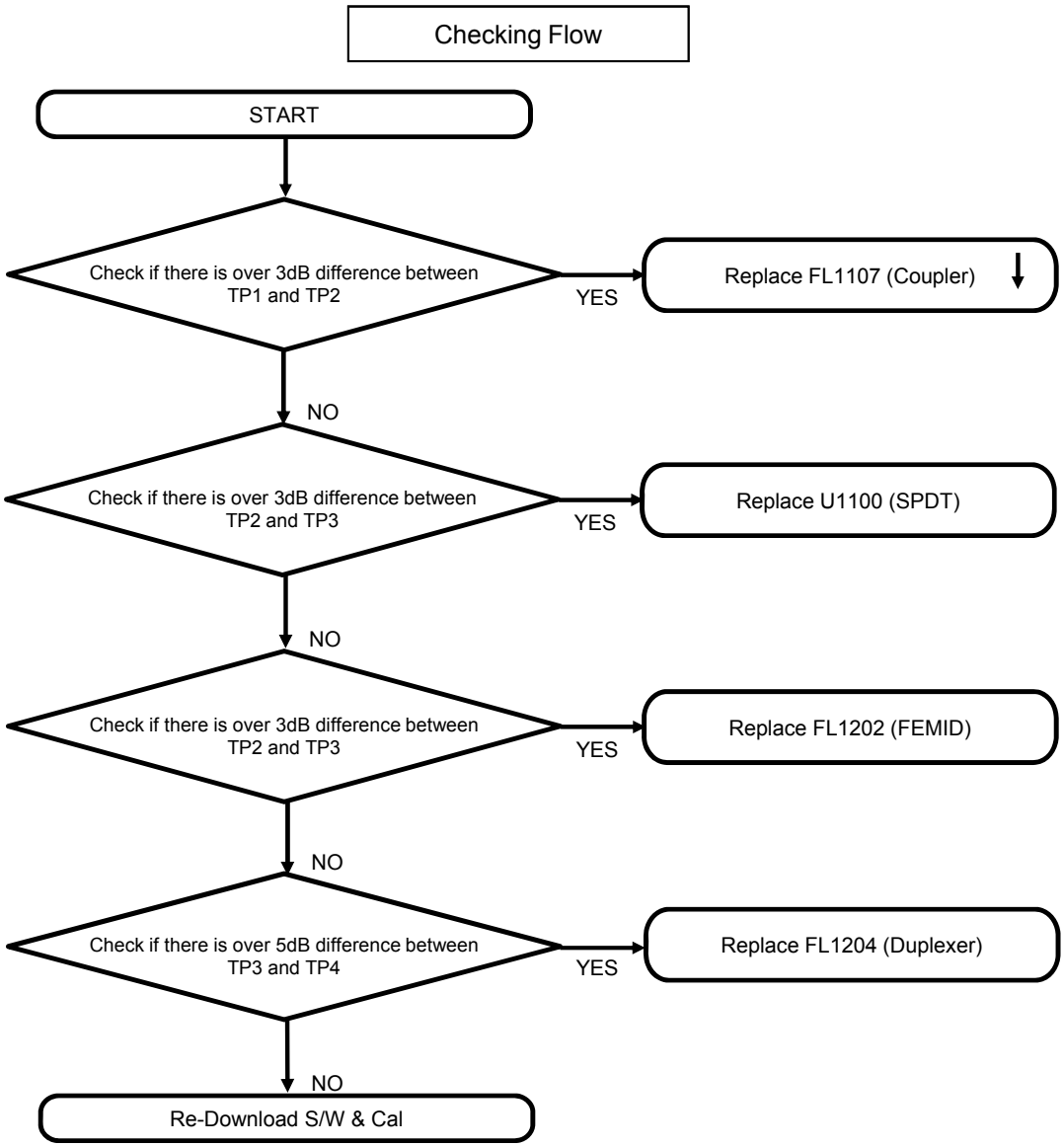

Test Point

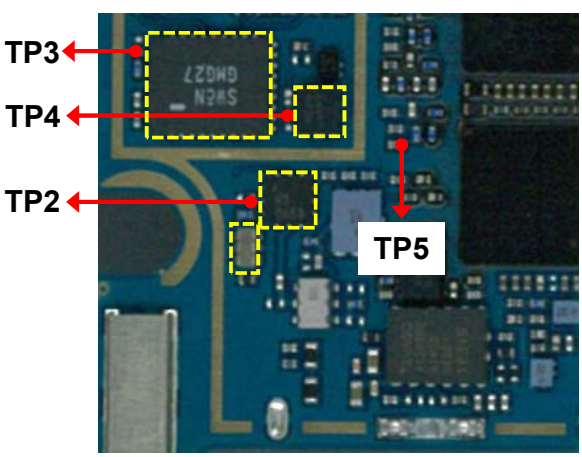

Top Side

Bottom Side

Circuit Diagram

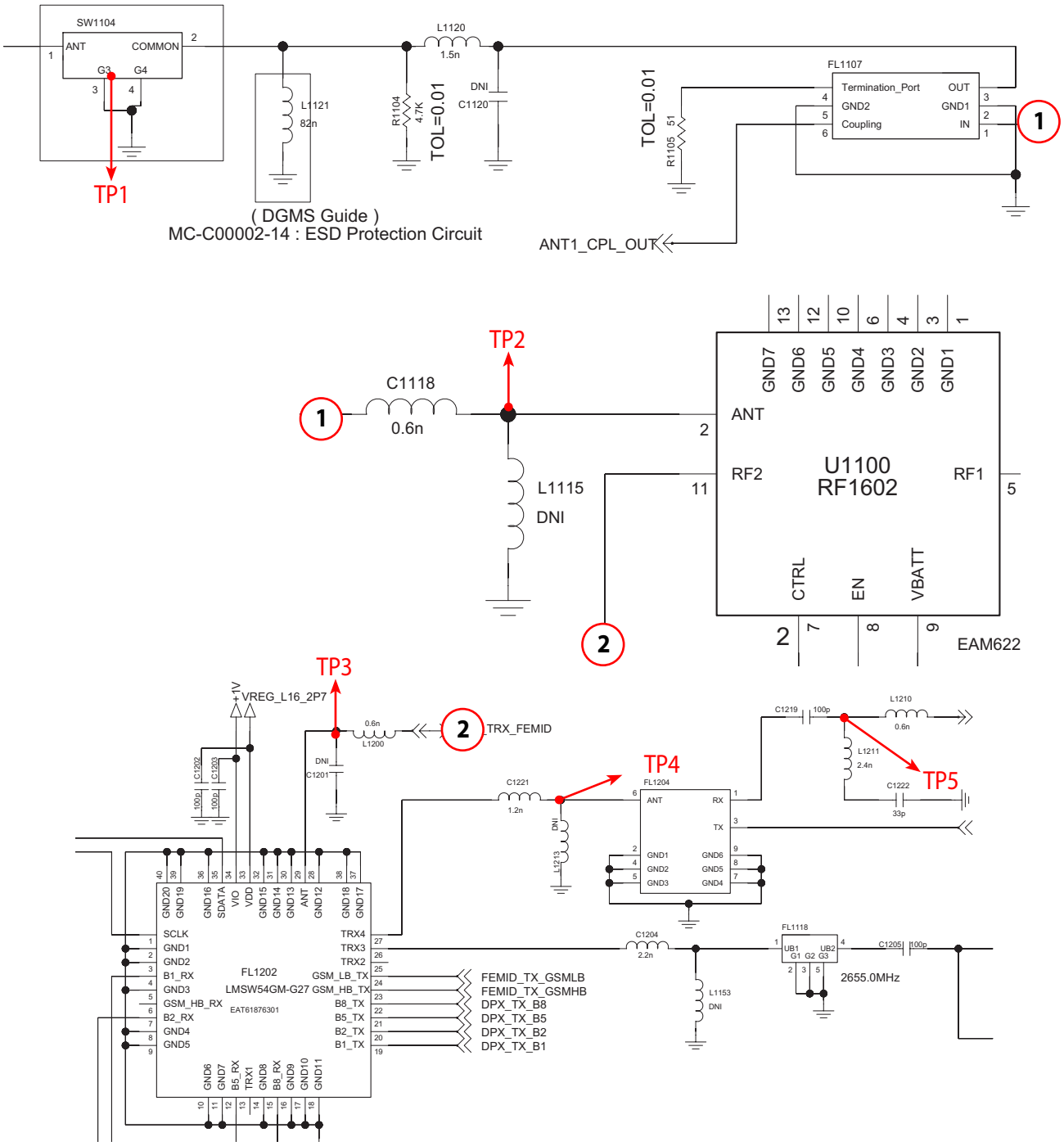

3. 5. 6. 2. LTE B3 RX- DRx

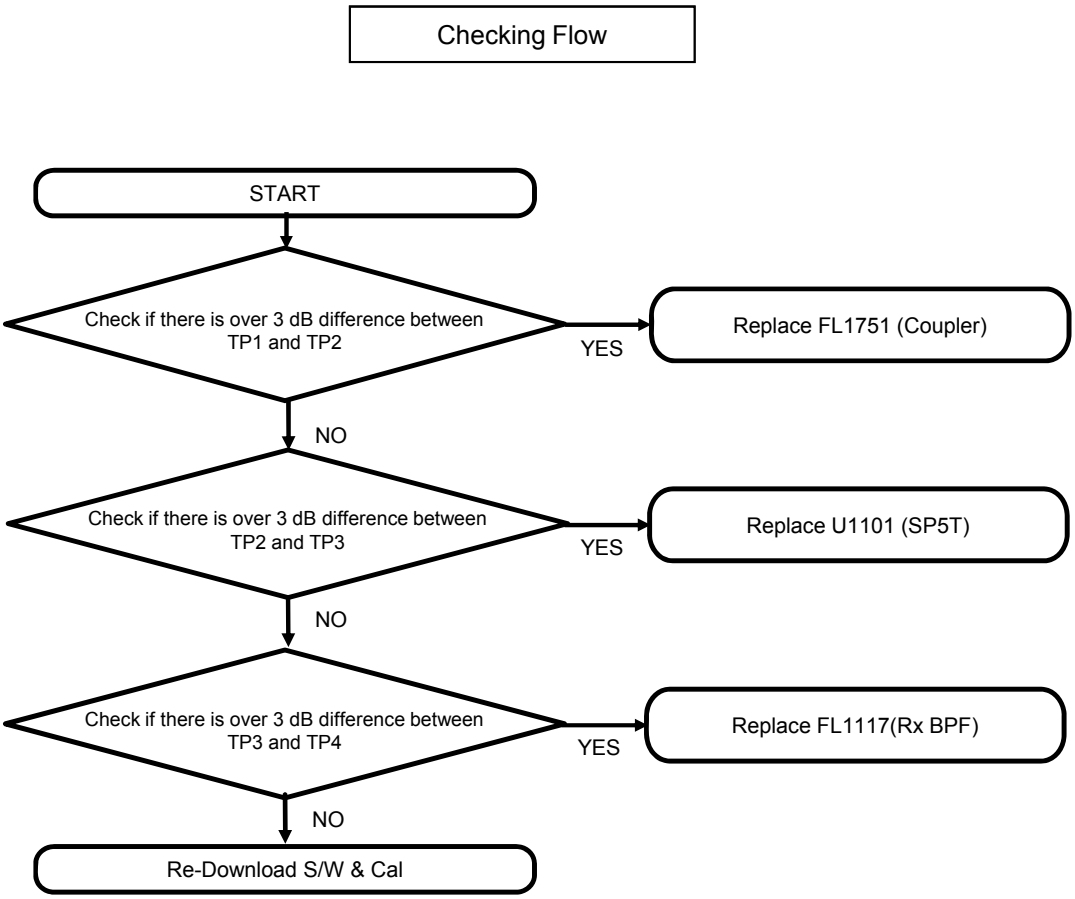

Test Point

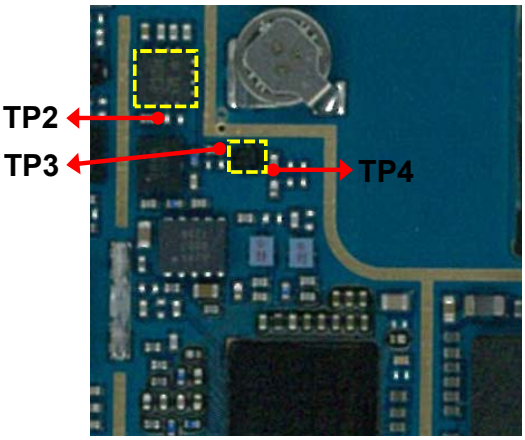

Top Side

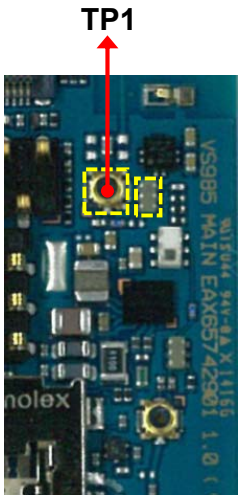

Bottom Side

Circuit Diagram

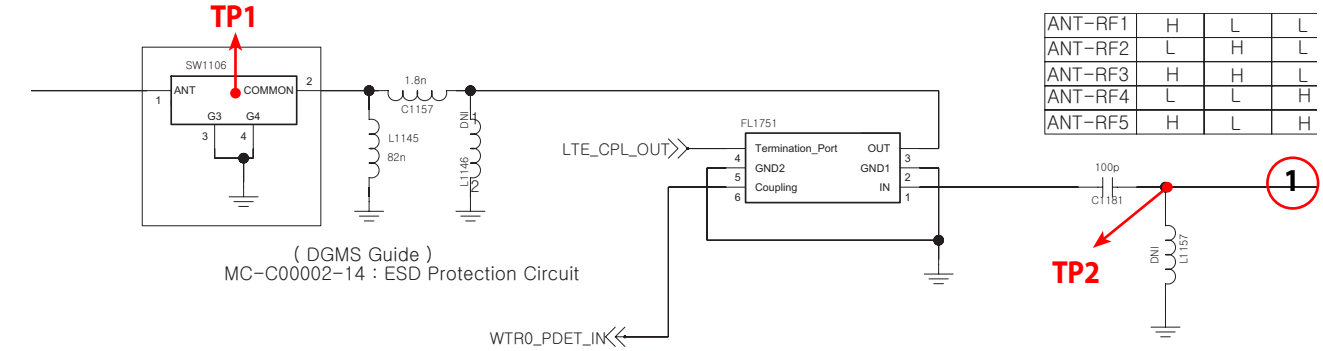

(DGMS Guide)
MC-C00002-14 : ESD Protection Circuit

ANT-RF1	H	L	L
ANT-RF2	L	H	L
ANT-RF3	H	H	L
ANT-RF4	L	L	H
ANT-RF5	H	L	H

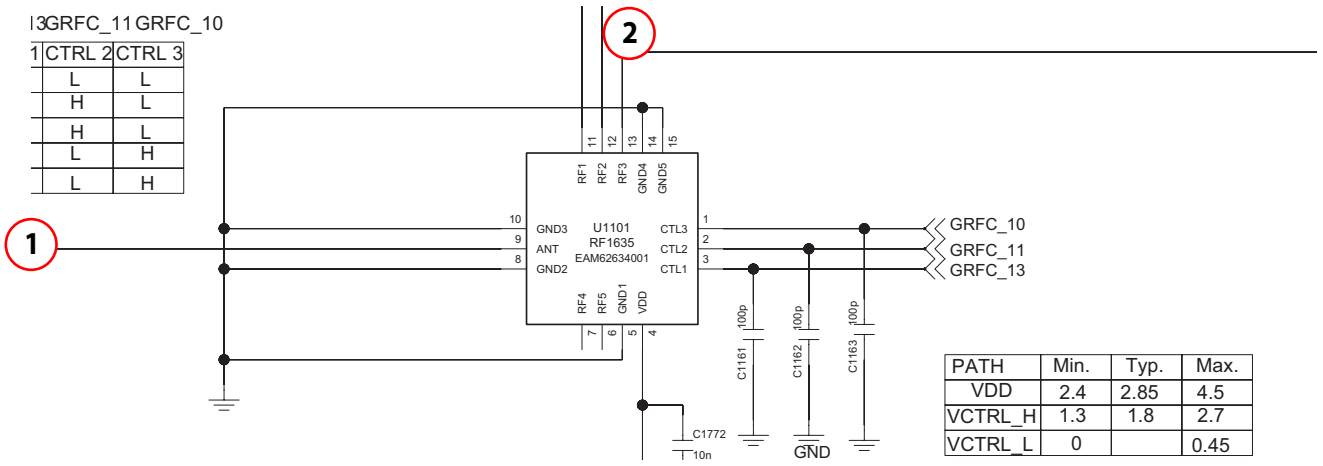

PATH	Min.	Typ.	Max.
VDD	2.4	2.85	4.5
VCTRL_H	1.3	1.8	2.7
VCTRL_L	0		0.45

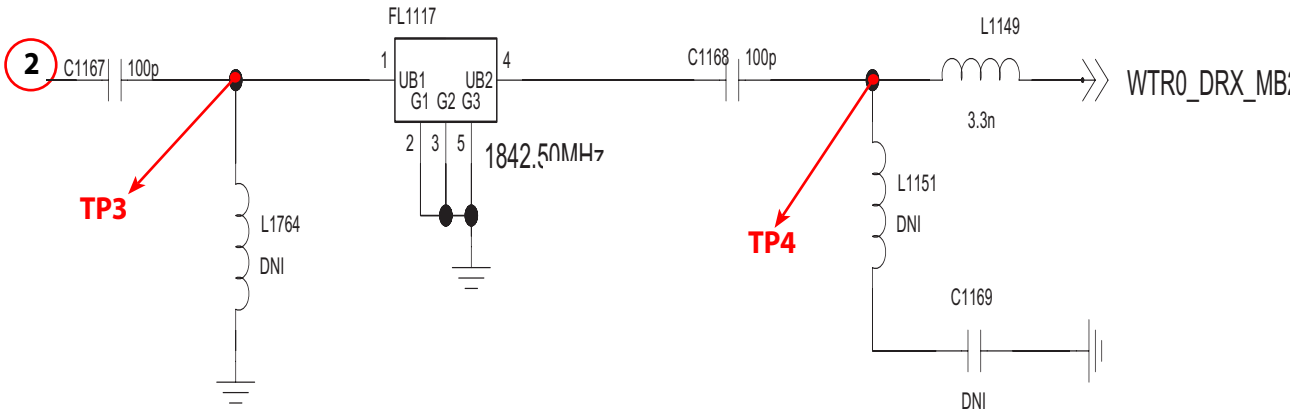

3. 5. 7. LTE B7 Rx

3. 5. 7. 1. LTE B7 RX- PRx

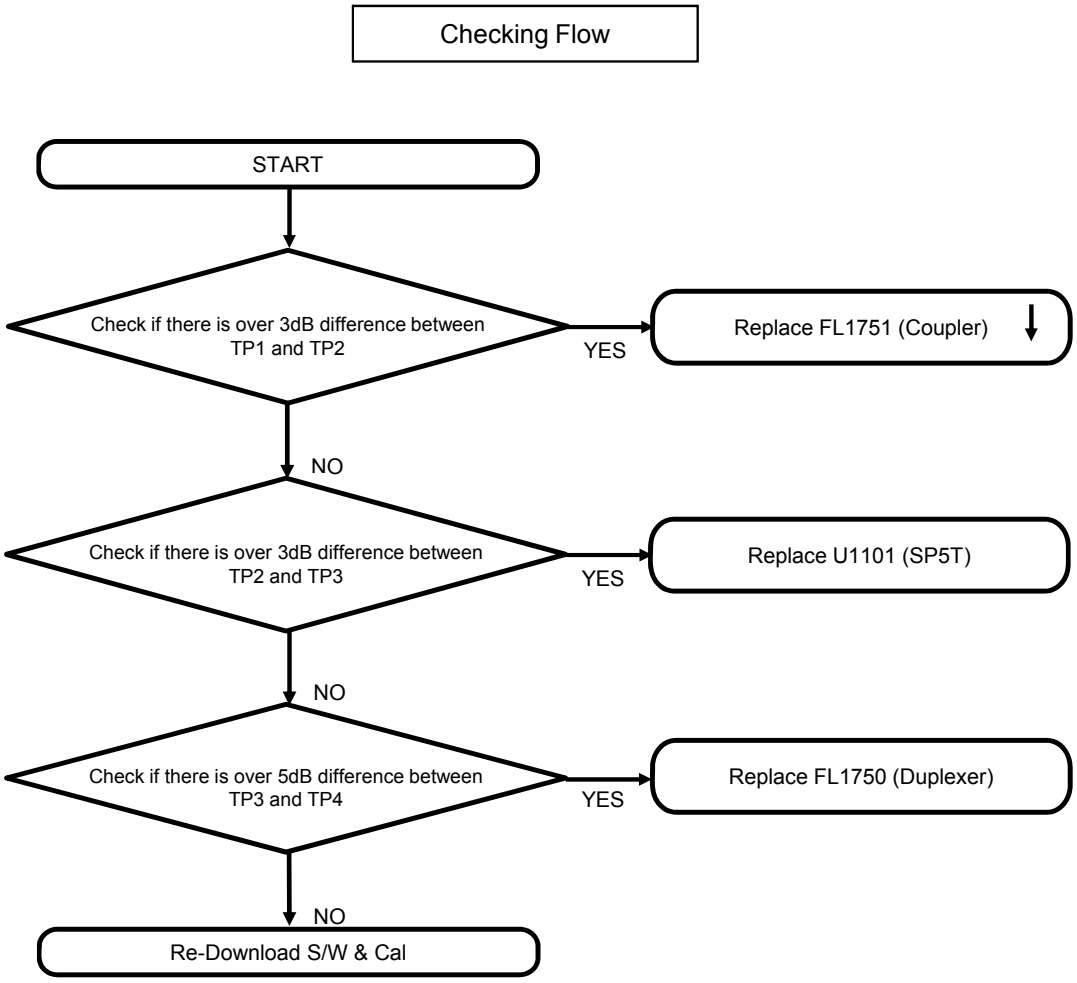

Test Point

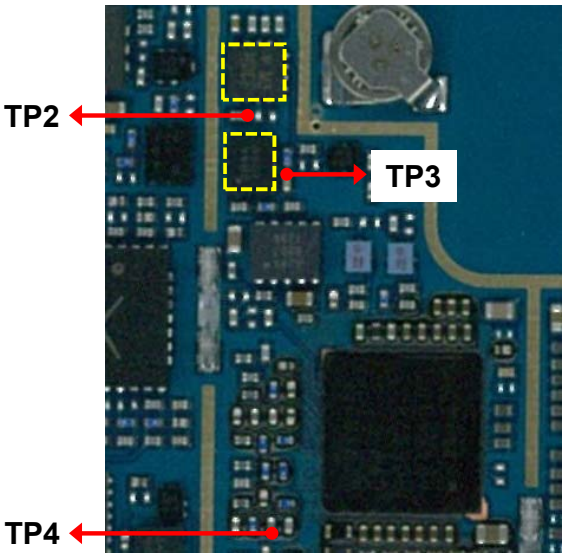

Top Side

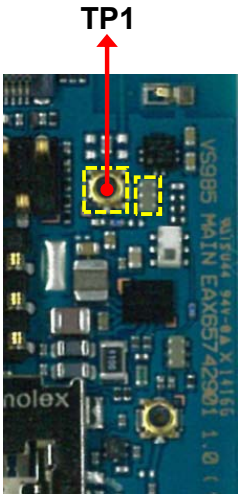

Bottom Side

Circuit Diagram

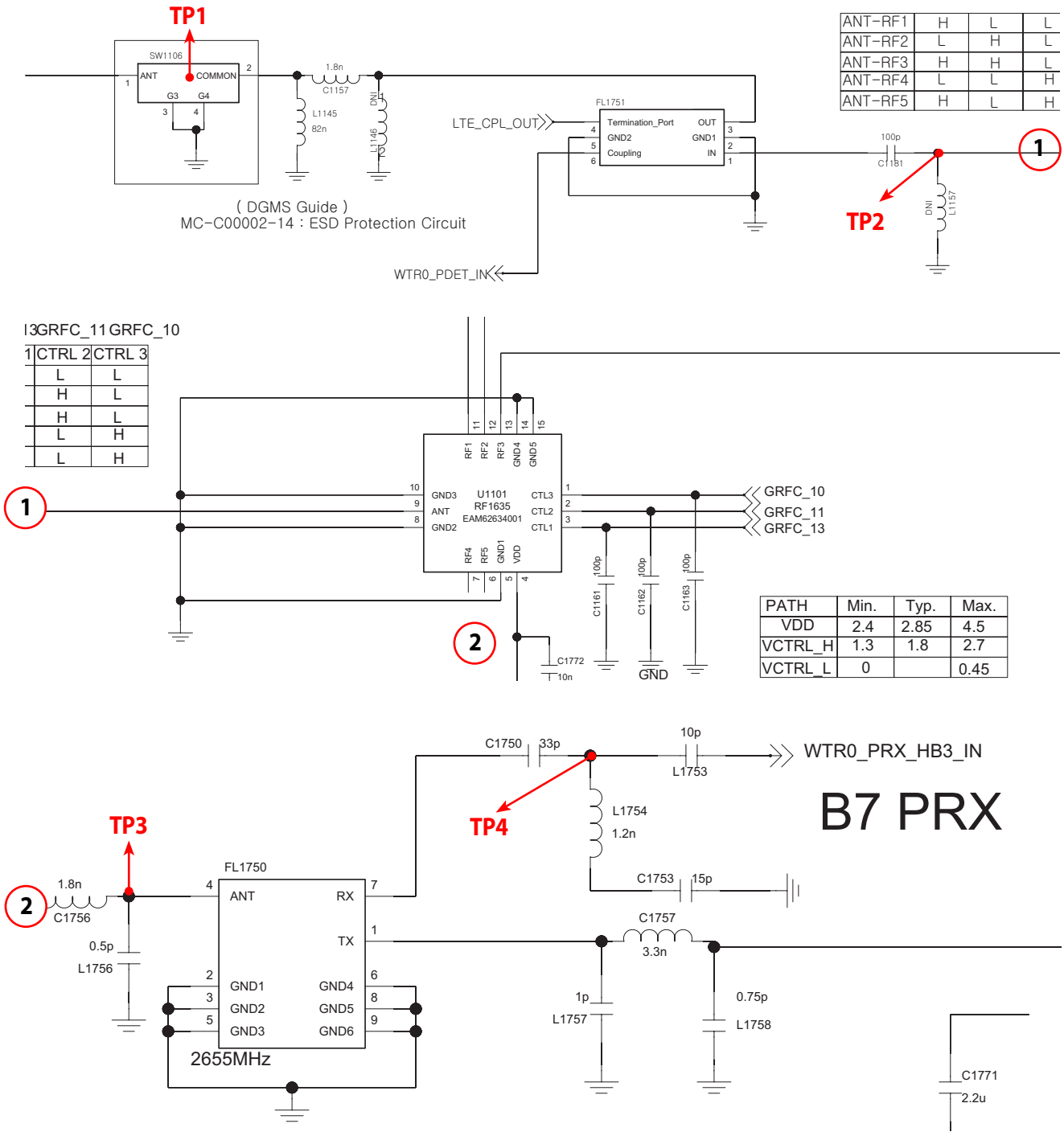

ANT-RF1	H	L	L
ANT-RF2	L	H	L
ANT-RF3	H	H	L
ANT-RF4	L	L	H
ANT-RF5	H	L	H

CTRL 2	CTRL 3
L	L
H	L
H	L
L	H
L	H

PATH	Min.	Typ.	Max.
VDD	2.4	2.85	4.5
VCTRL_H	1.3	1.8	2.7
VCTRL_L	0		0.45

3. 5. 7. 2. LTE B7 RX- DRx

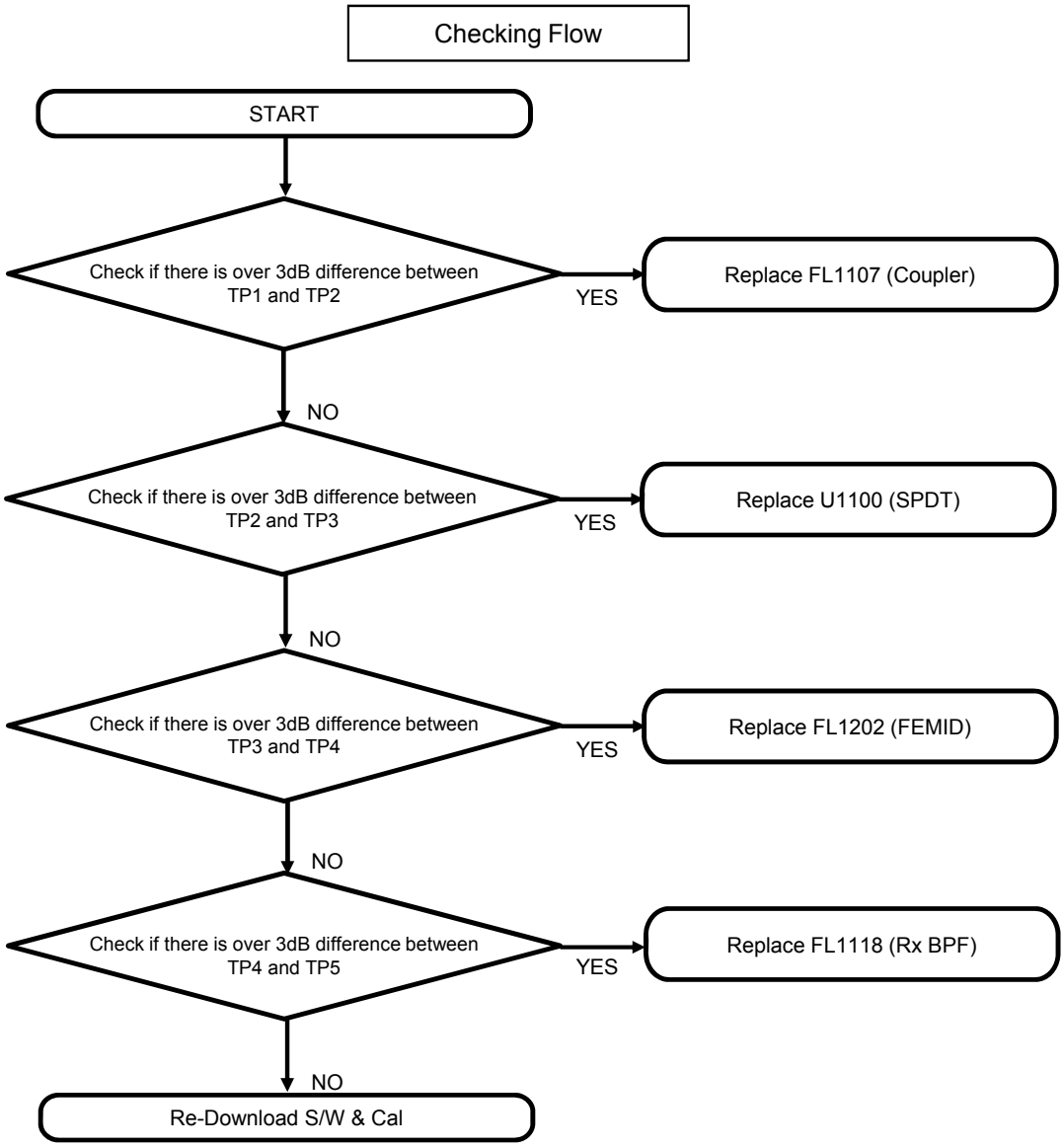

Test Point

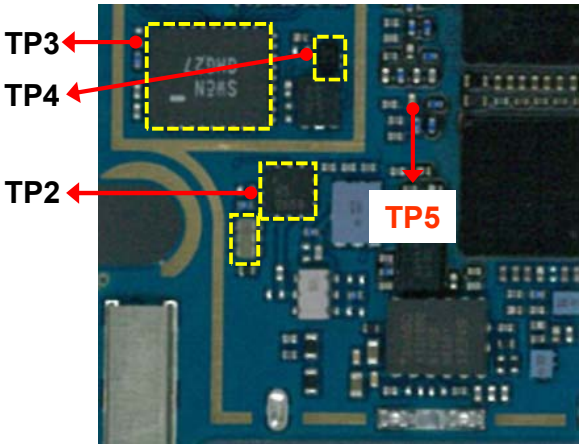

Top Side

Bottom Side

Circuit Diagram

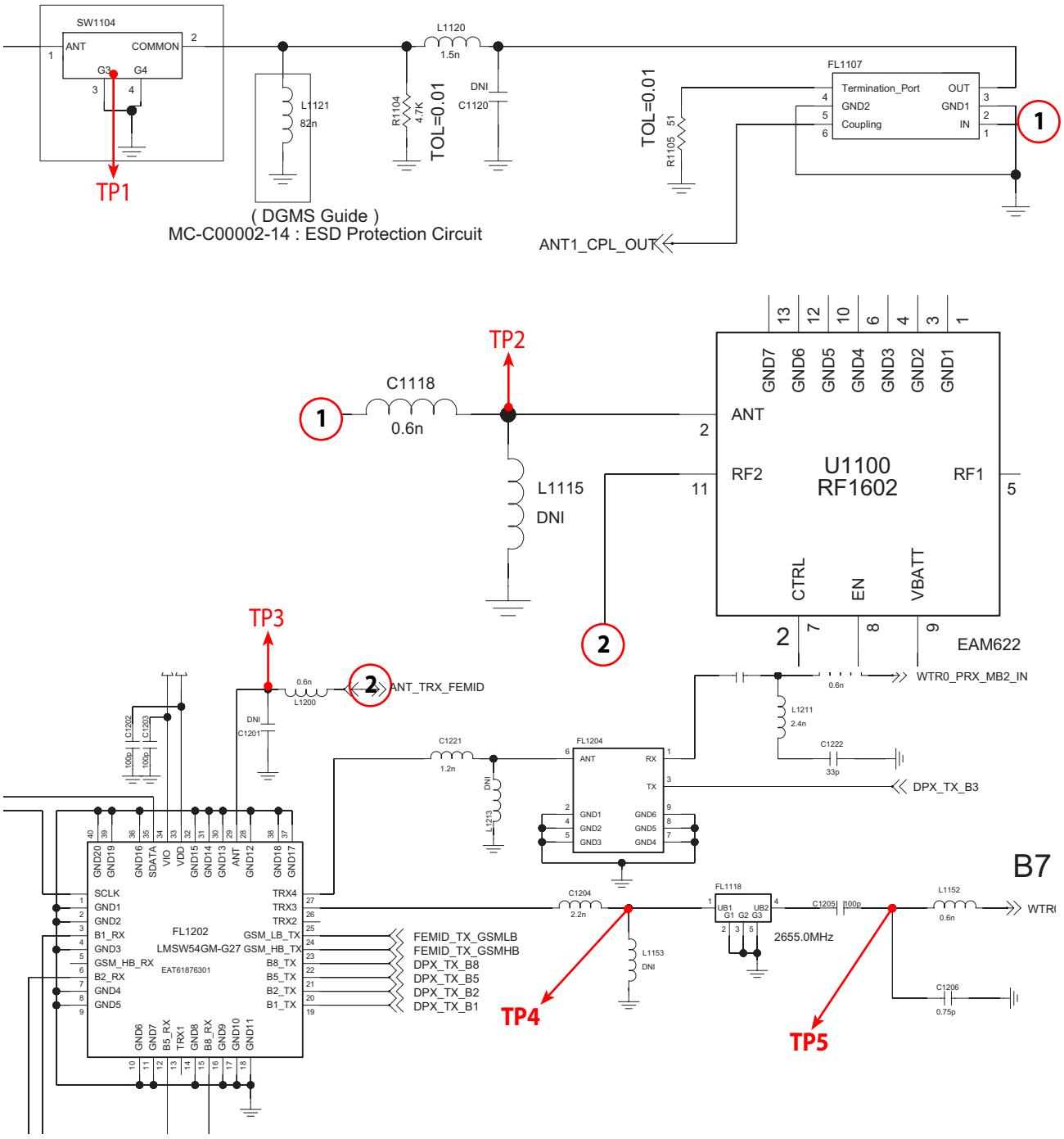

3. 5. 8. LTE B13 Tx

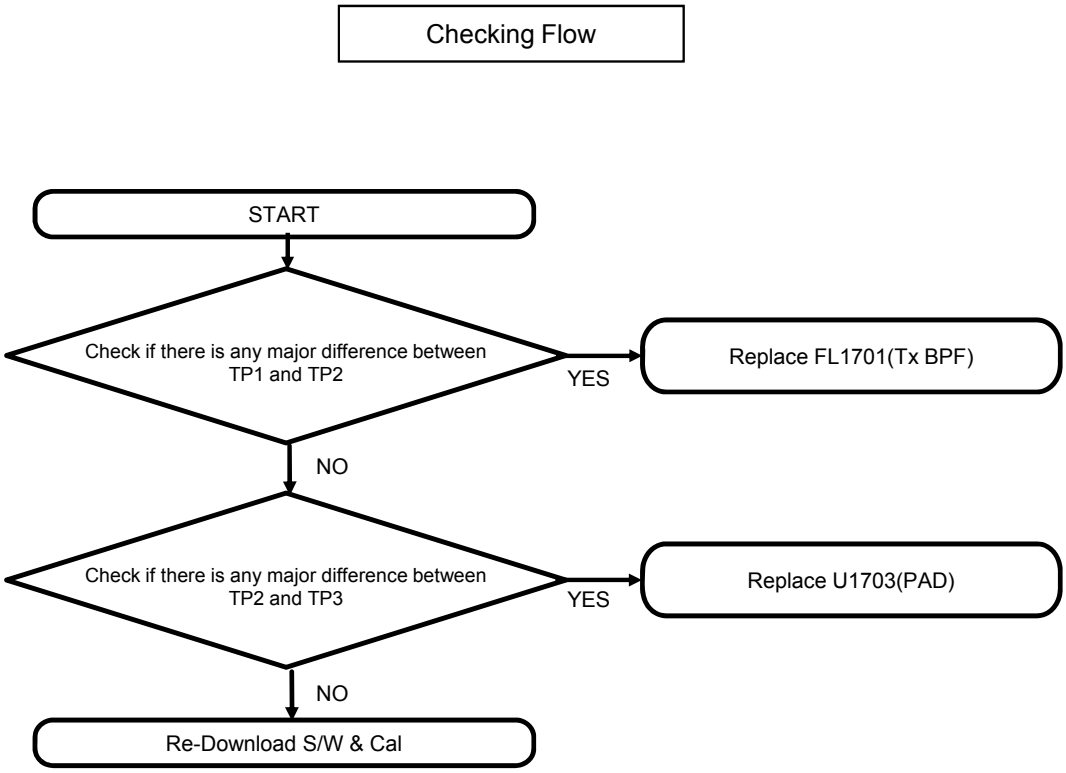

Test Point

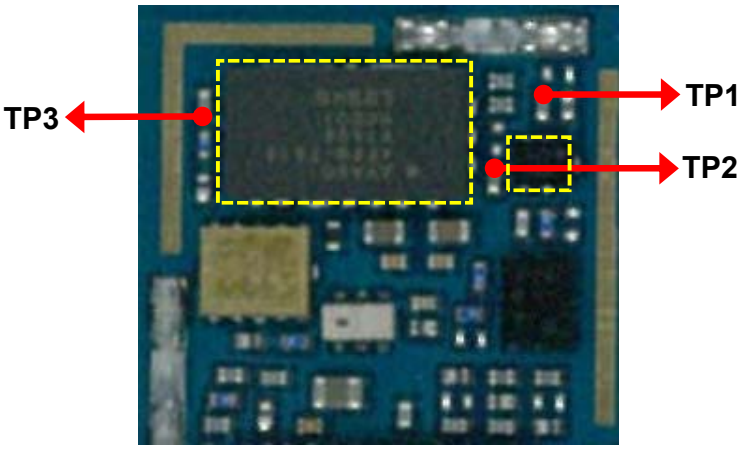

Top Side

Circuit Diagram

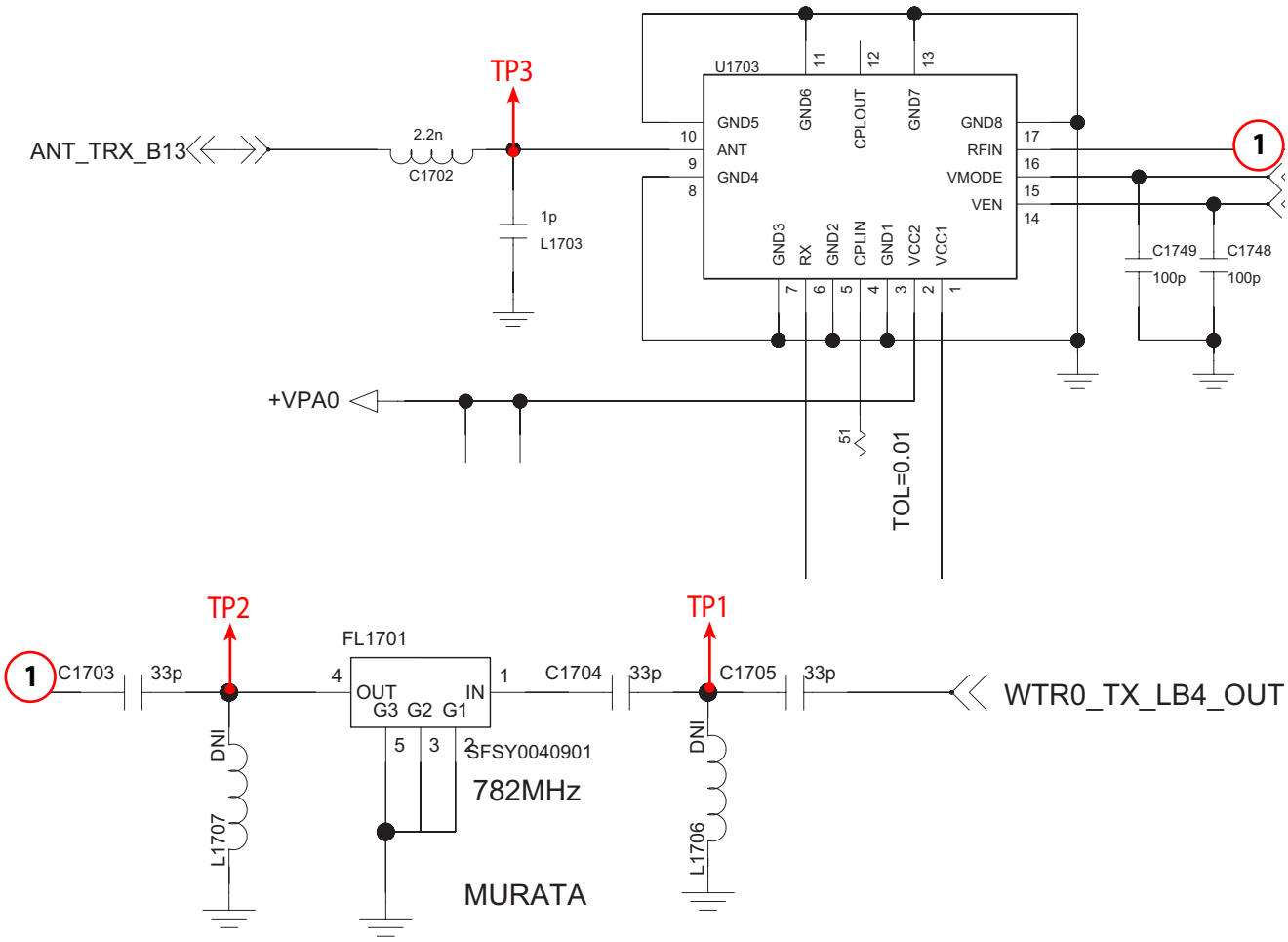

3. 5. 9. LTE B4 Tx

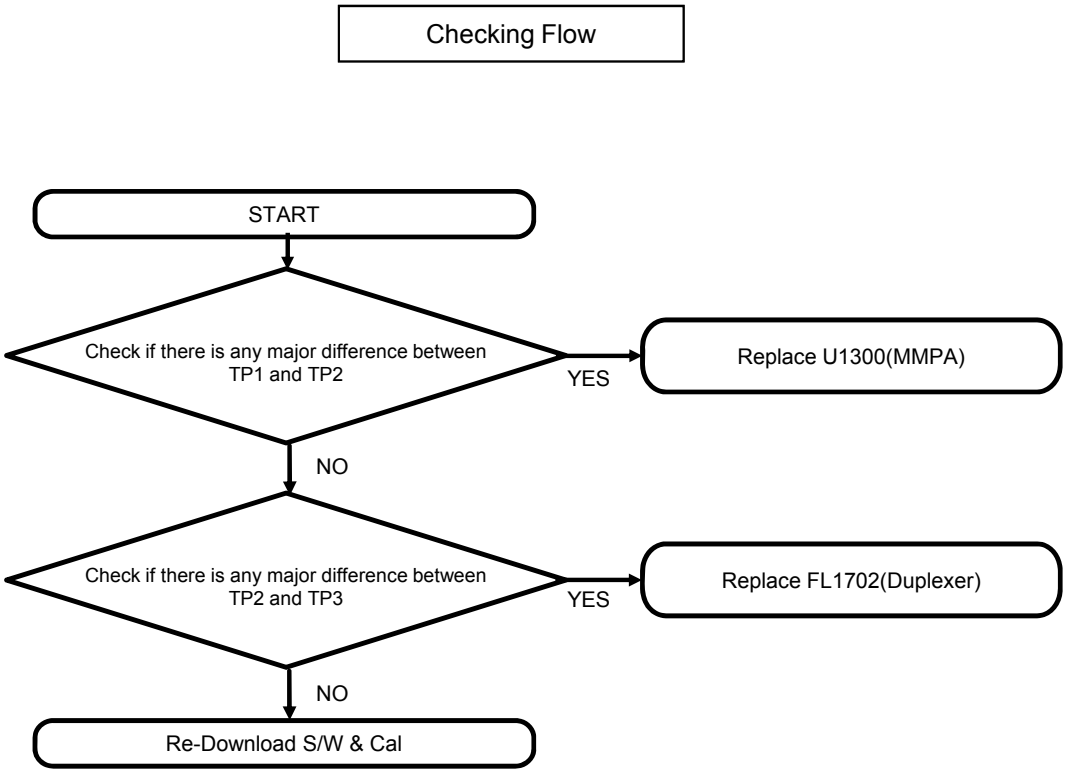

Test Point

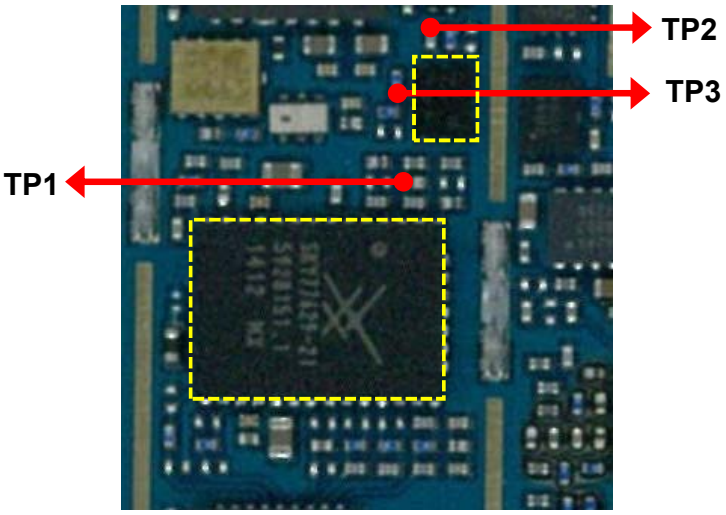

Top Side

Circuit Diagram

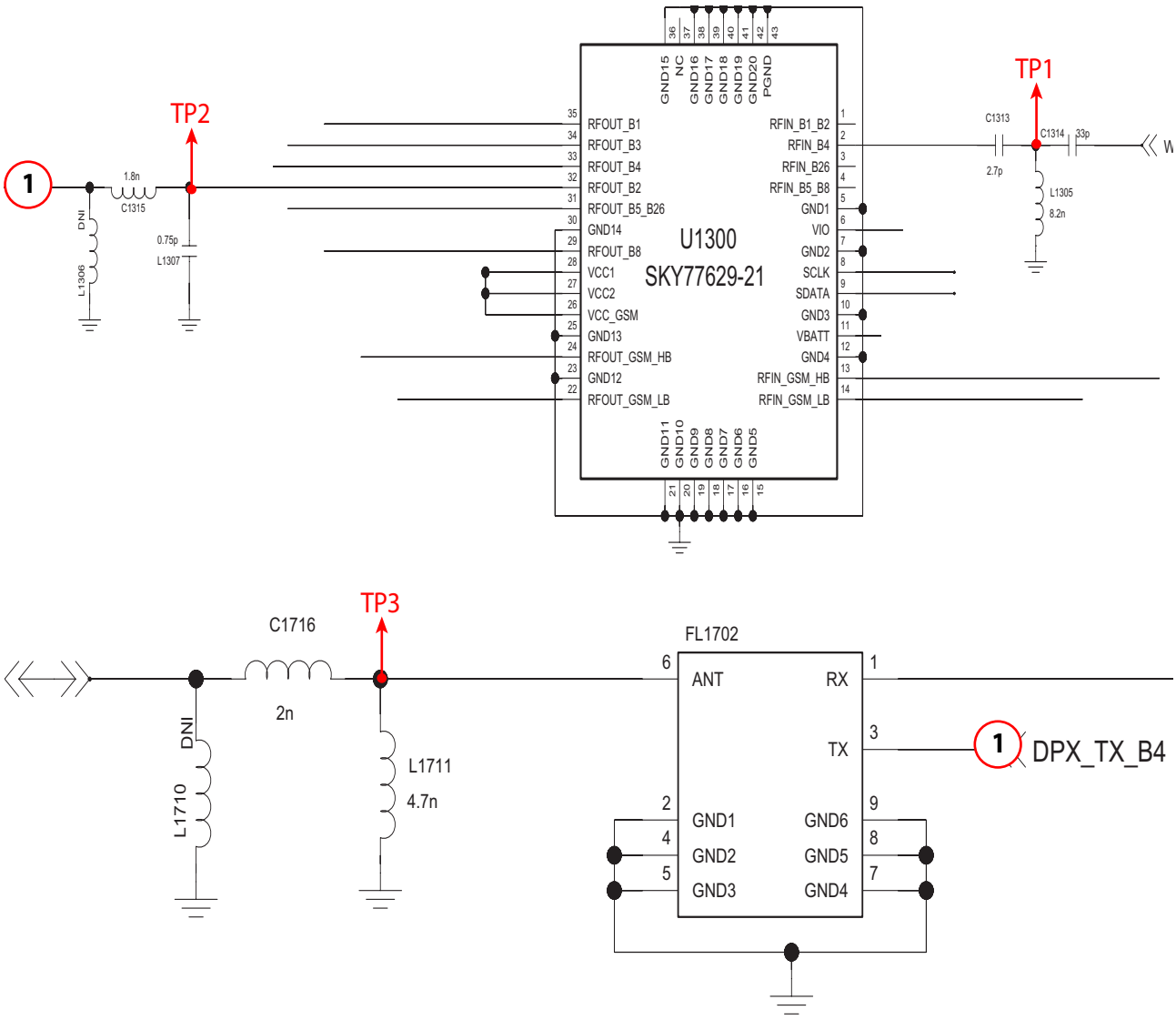

3. 5. 10. LTE B3 Tx

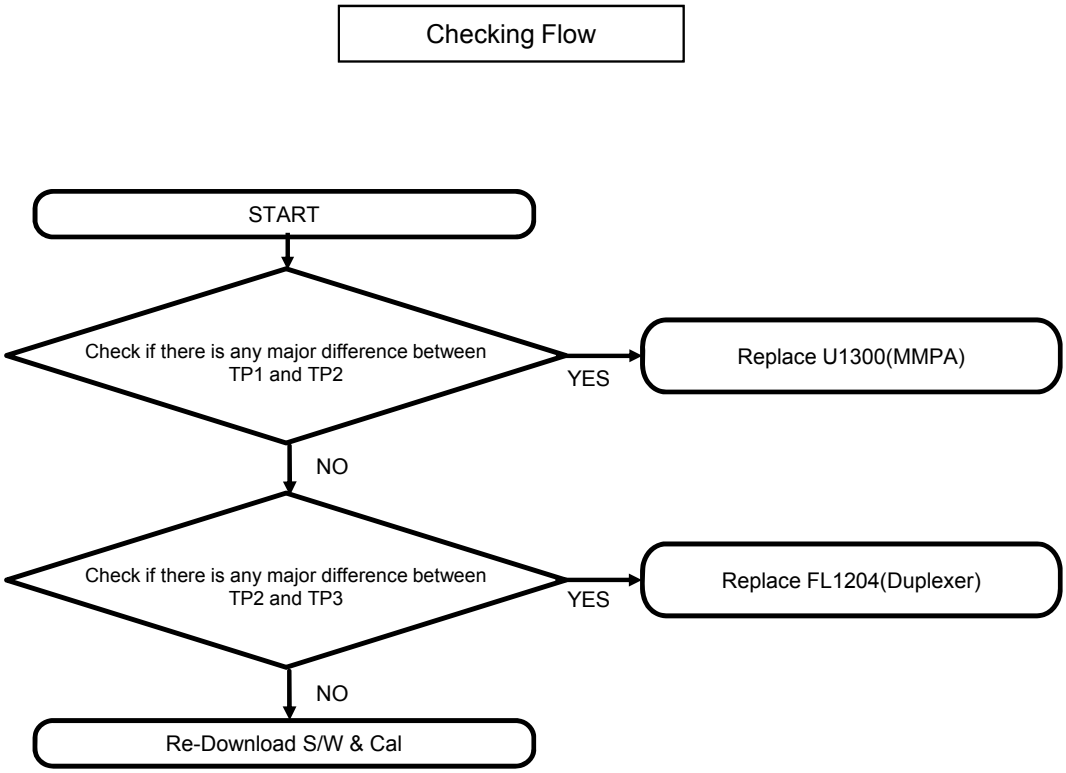

Test Point

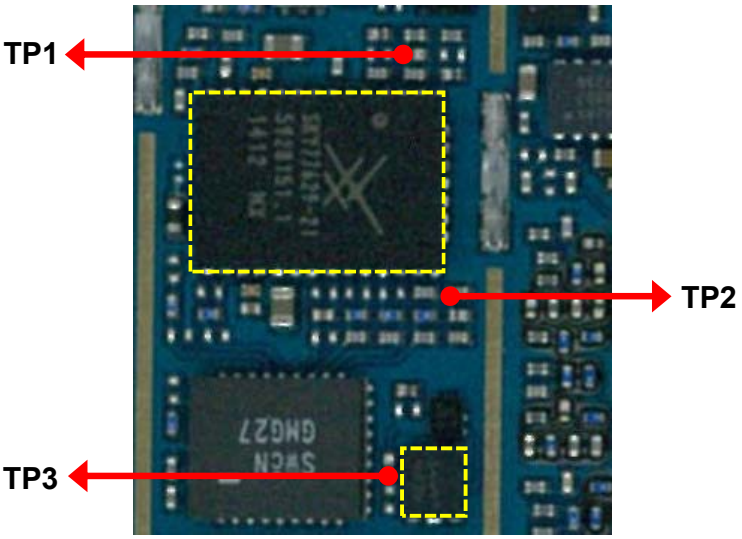

Top Side

Circuit Diagram

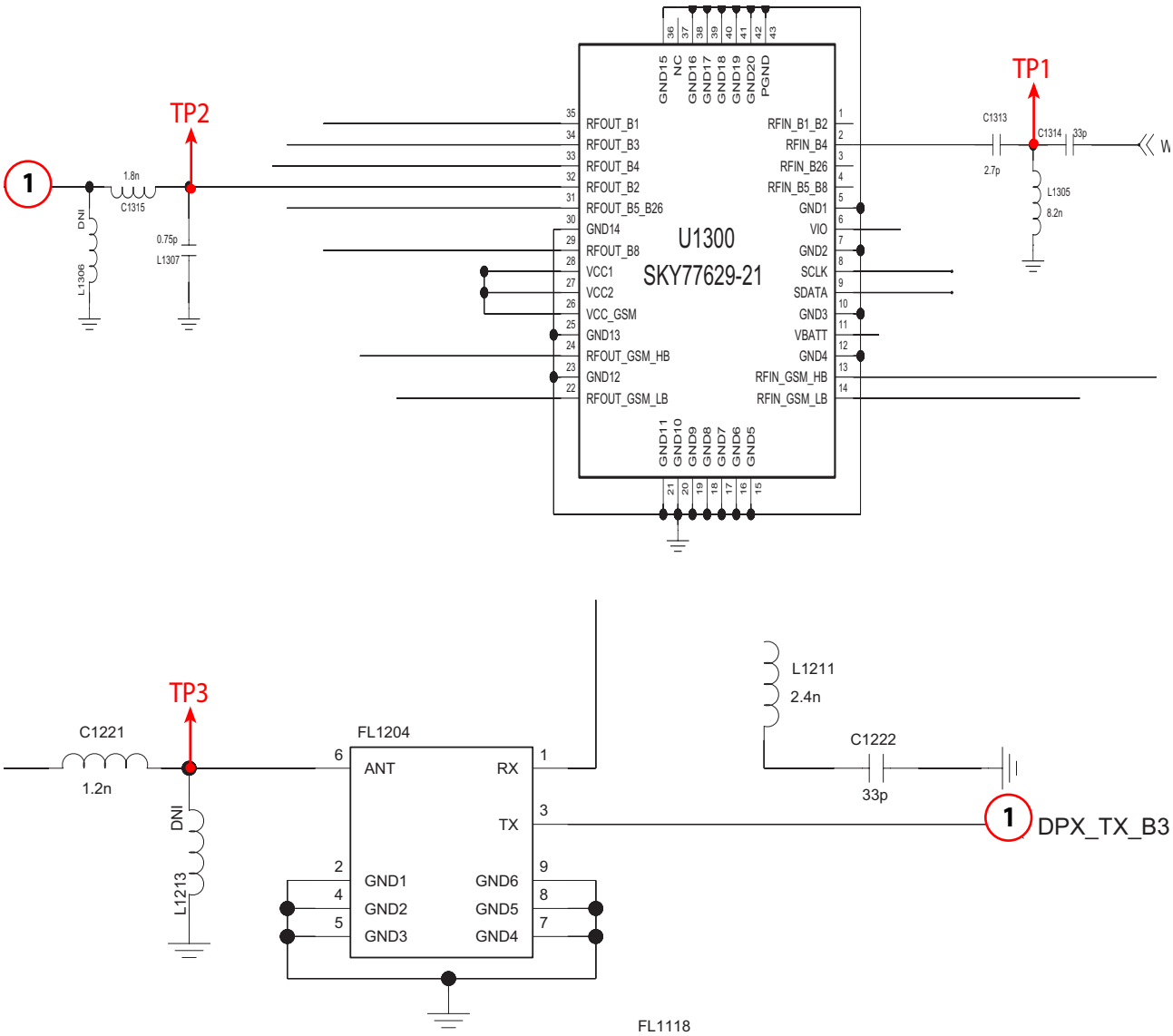

3. 5. 11. LTE B7 Tx

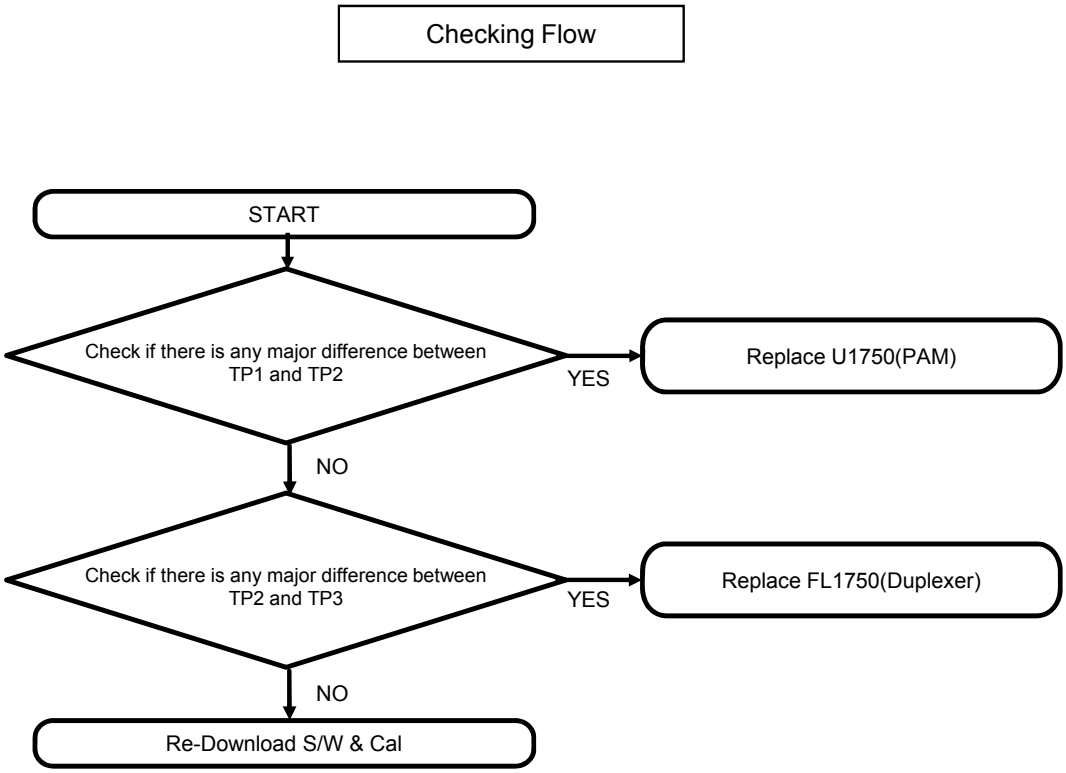

Test Point

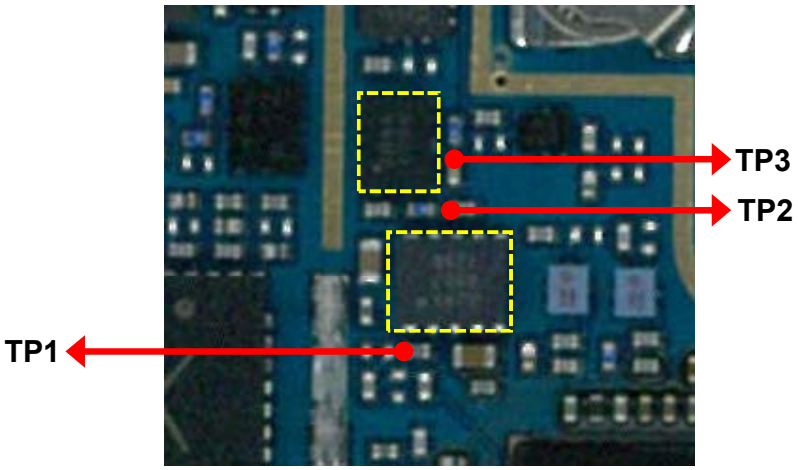

Top Side

Circuit Diagram

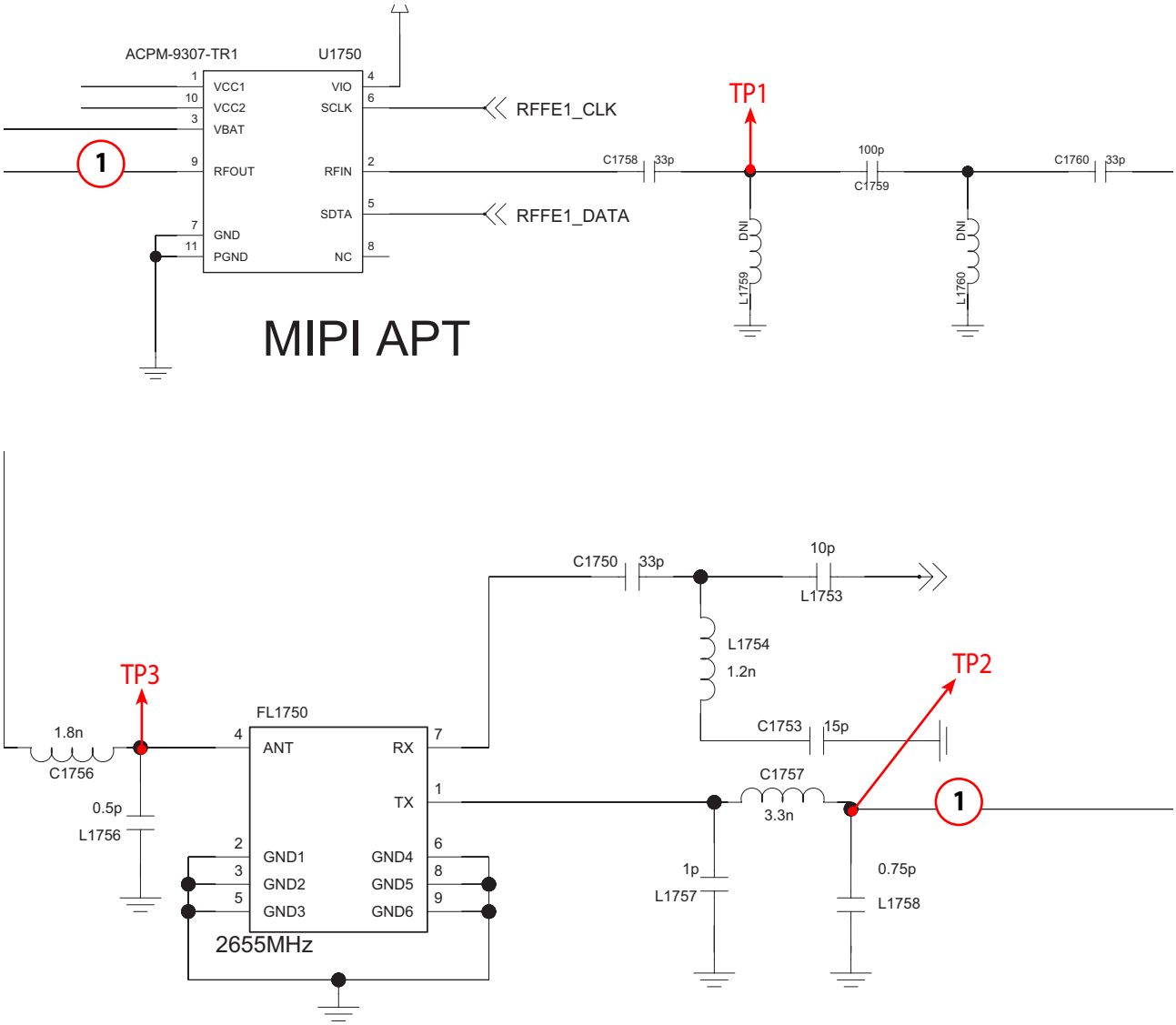

3. 6 . Power TS

The main power source of AS985 is provided by 2 chips which are PM8941 and PM8841
Since MSM8974 only powers up normally when MSM8974 is properly powered
therefore, PM8941 and PM8841 are the actual one to take look at.
Power ON sequence of AS985 is,
PWR key press ->HONE_ON_KEY_N,KYPD_PWR_N Low -> PON_OUT High -> PON_1, PS_HOLD High(PM8841)->PM8841 ON-> S1,S2,S3,PON_RESET_N goes High, CLK ON ->PS_HOLD High-> PM8941 ON

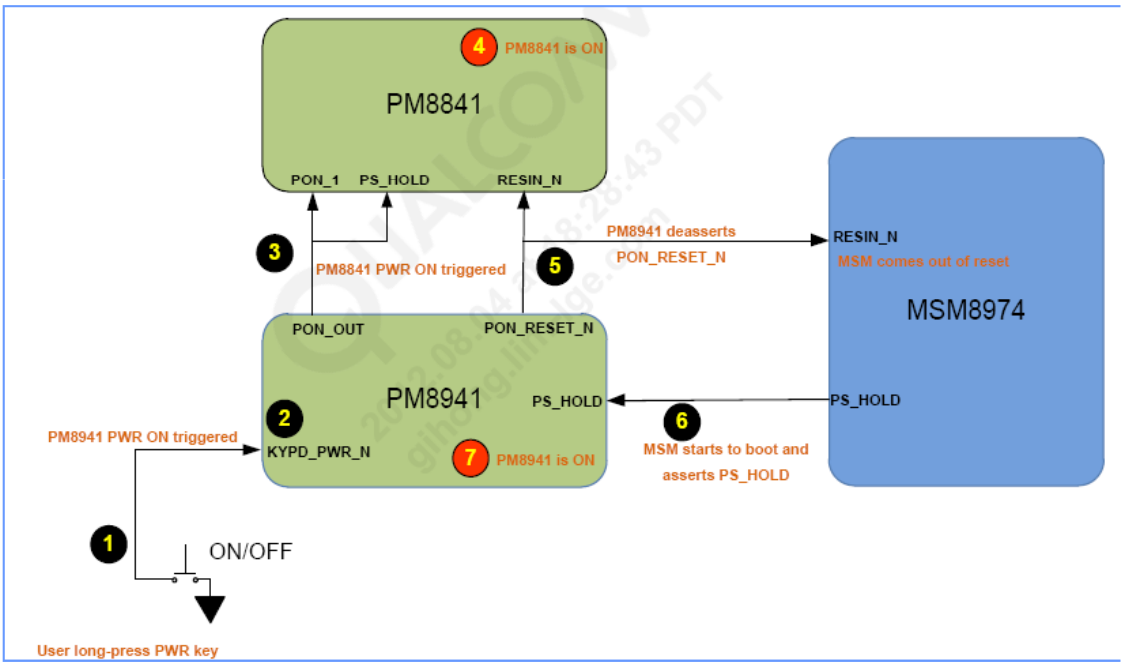

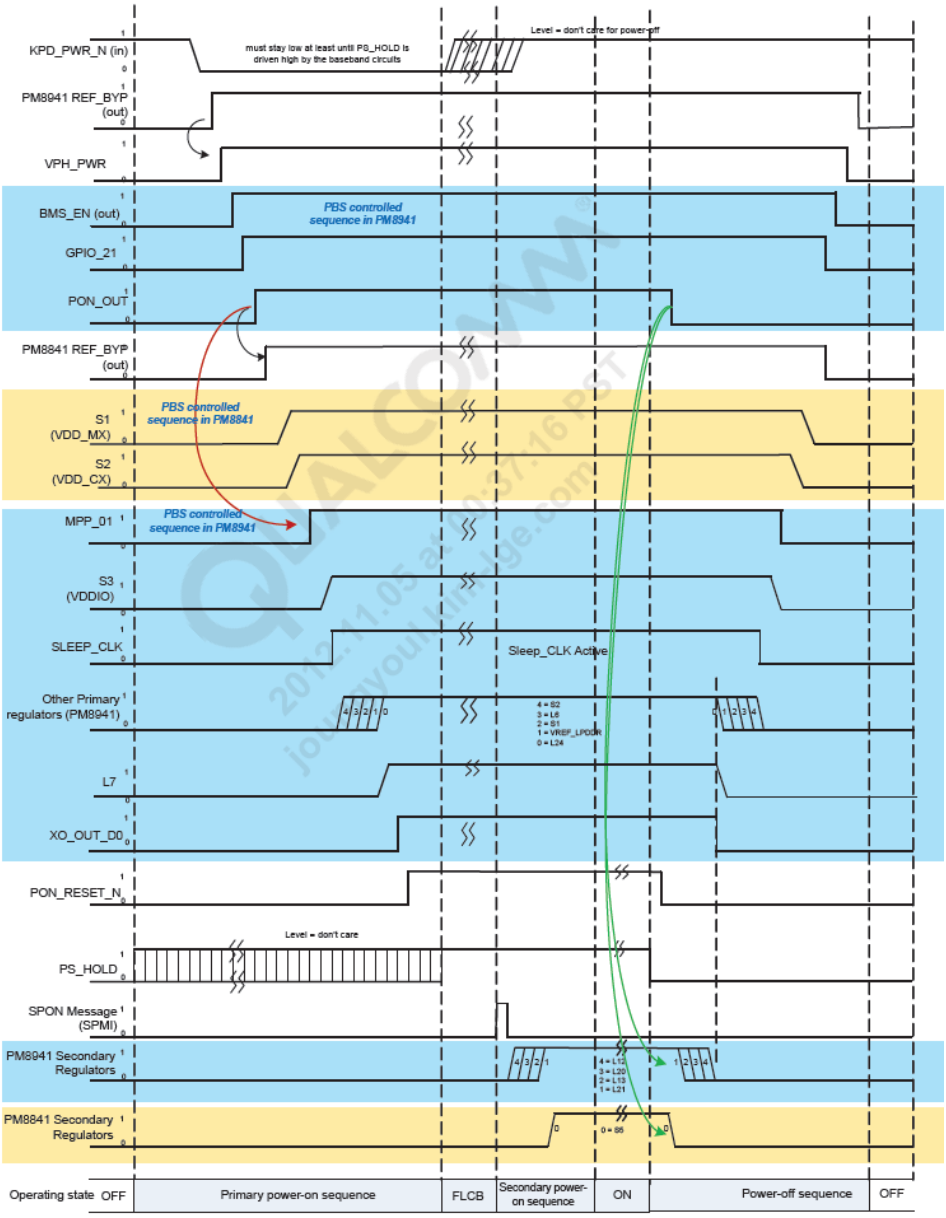

PM8941Power on sequence

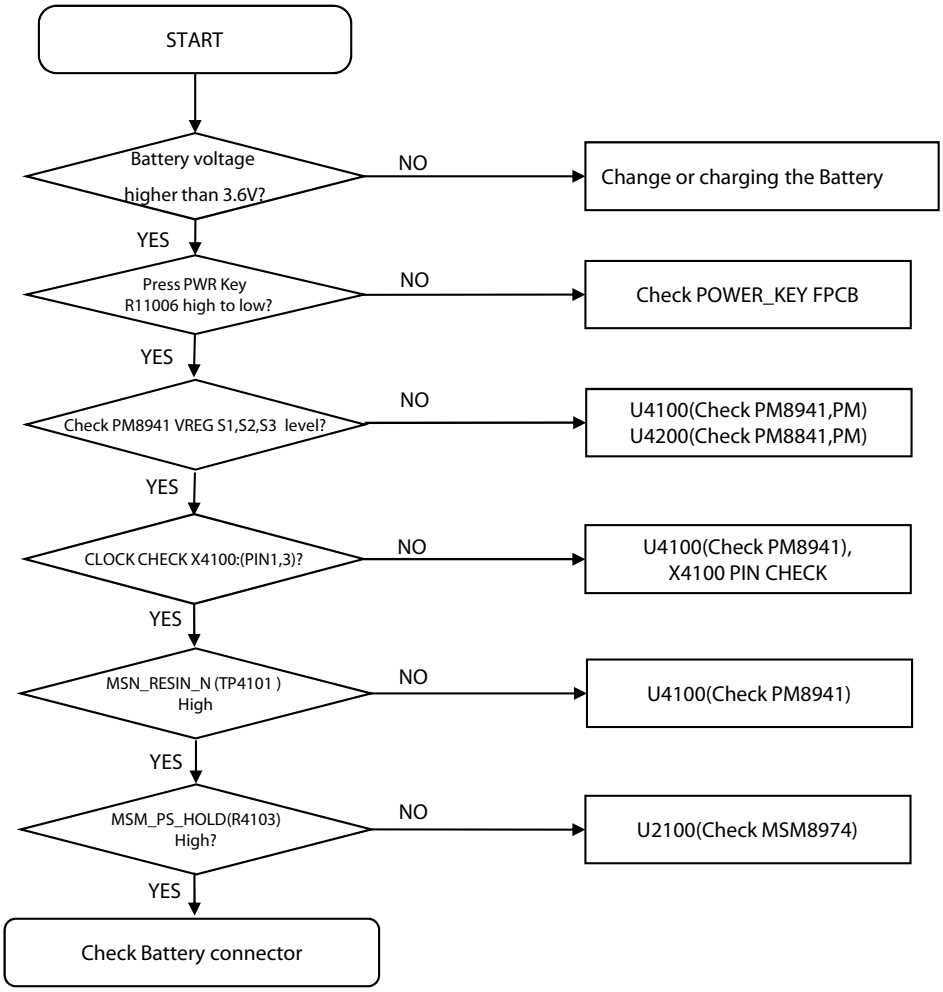

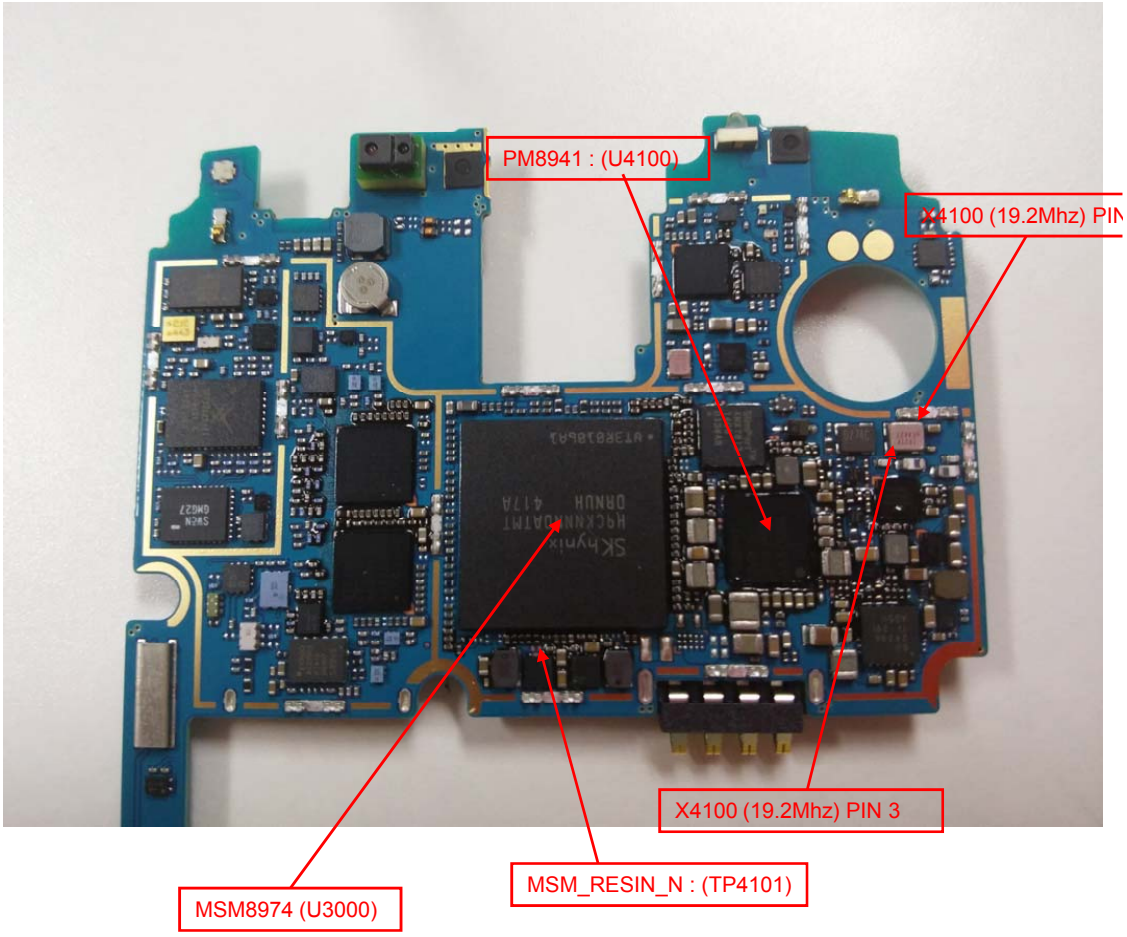

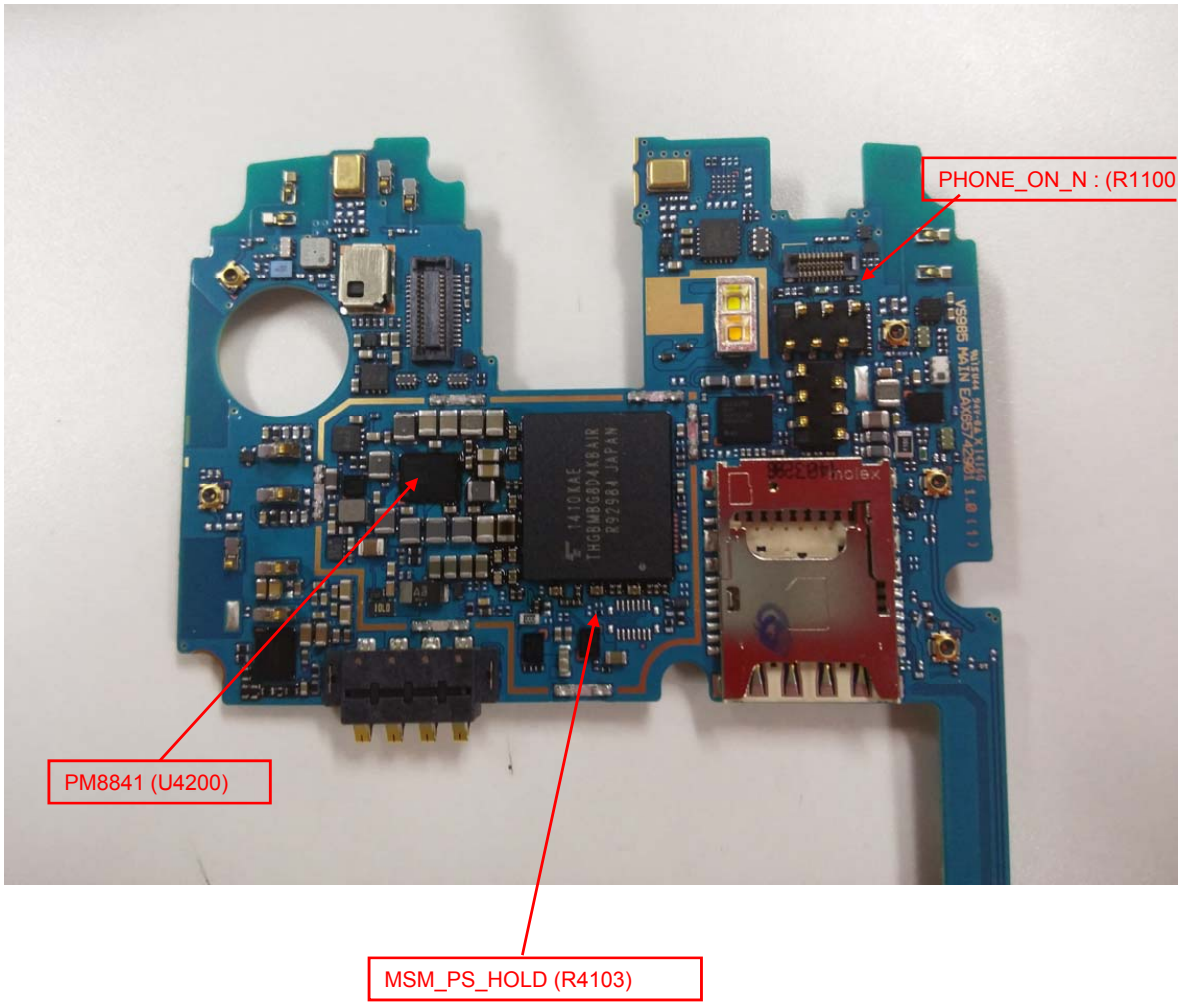

3.7. Charging TS

AS985 uses BQ24296 or charging control. The BQ24296 circuit includes the charging pass transistor detects the VDD and VBAT voltages, and its control driver.

Charging Procedure

- Supply the VCHG use a TA or u-USB cable
- BQ24296 control the charging current by using DPM(Dynamic Power Measure)
- Charging current flows into the main battery

Troubleshooting Check Point

- Connection of the TA or u-USB cable
- Charging current path is VBAT
- Main battery

During charging operation test point(R8065) signal goes high and when external power disabled is low.

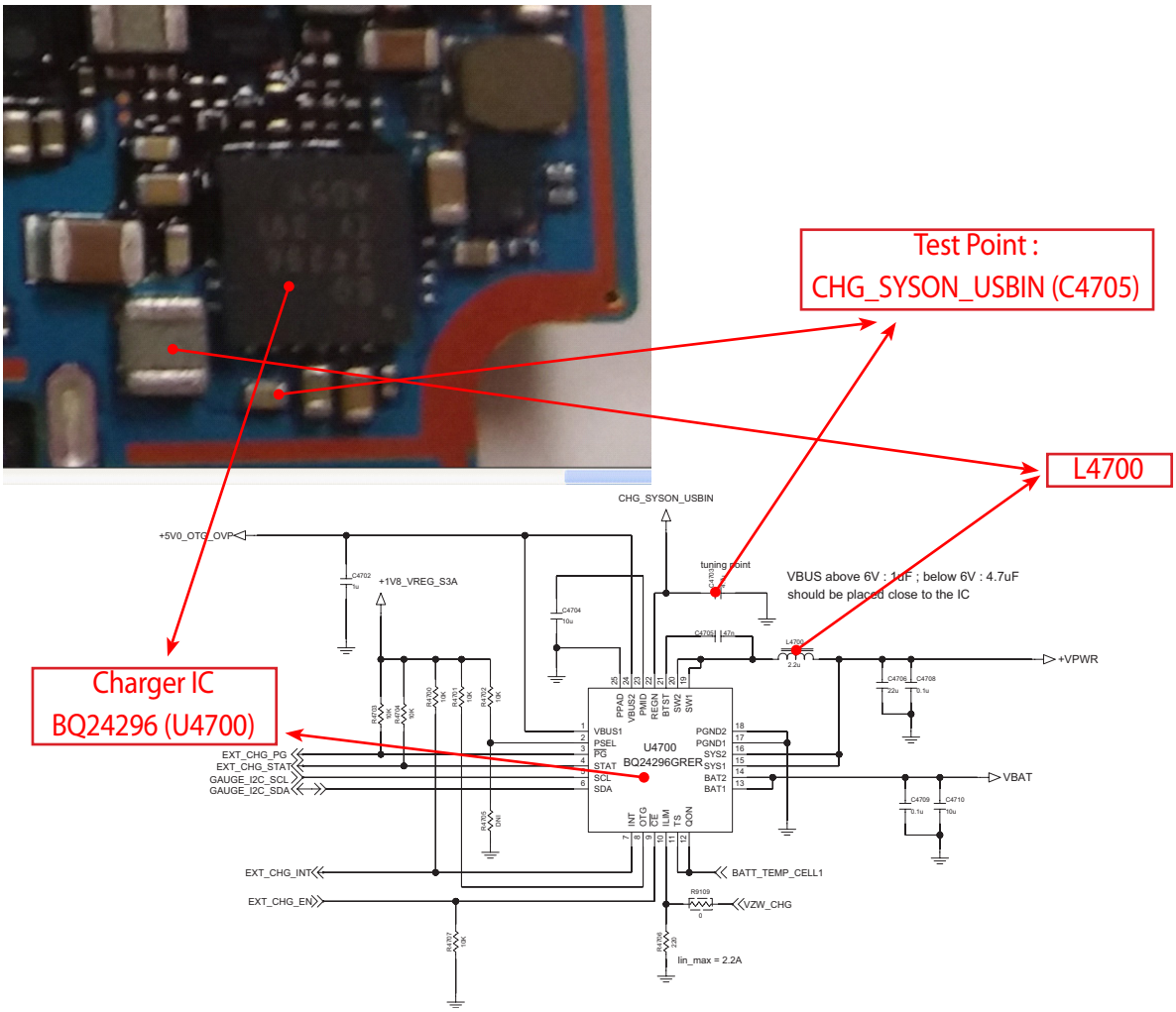

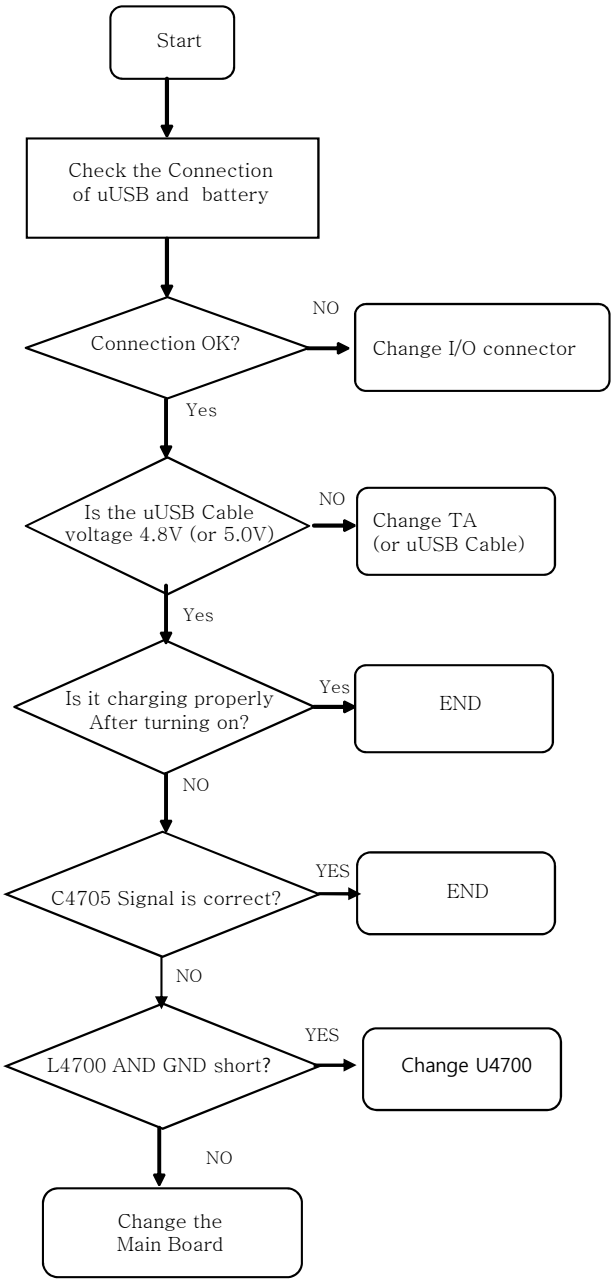

3. 8. USB

The sequence of USB connection:

USB cable is plugged into LG-AS985 and host device -> USB_VCHG goes to 5V -> USB_IO_P goes to 3.05V -> USB_DATA is triggered -> USB working

Block Diagram of USB connection is shown below.

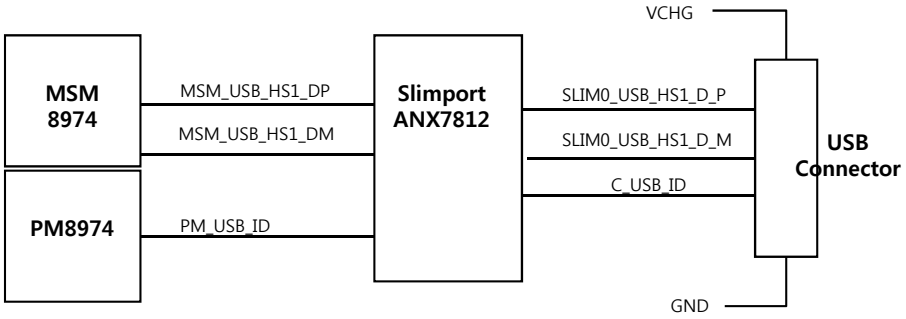

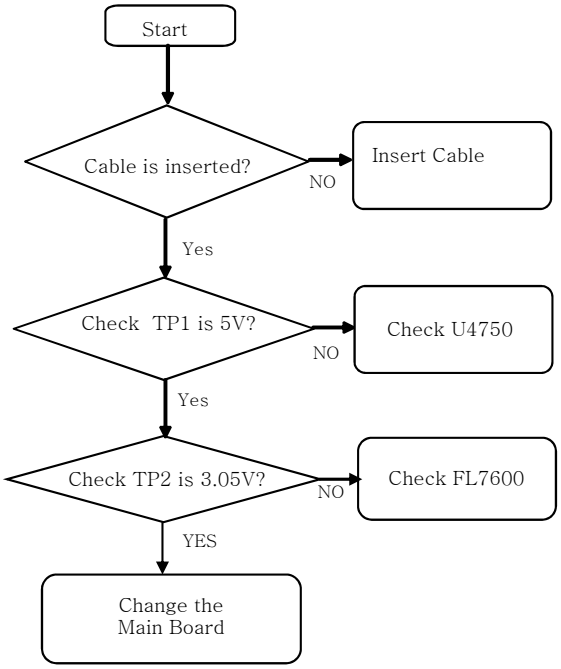

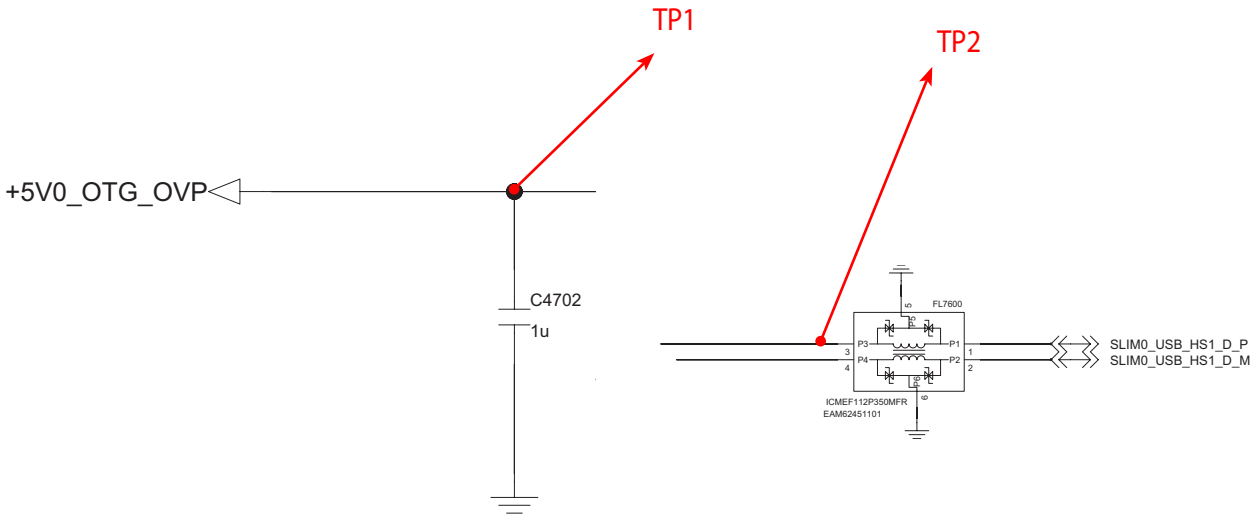

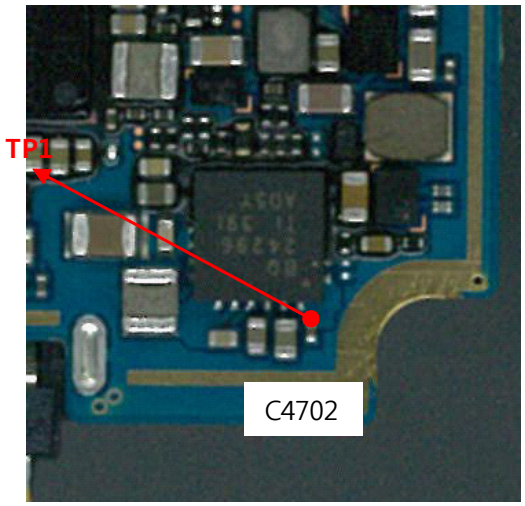

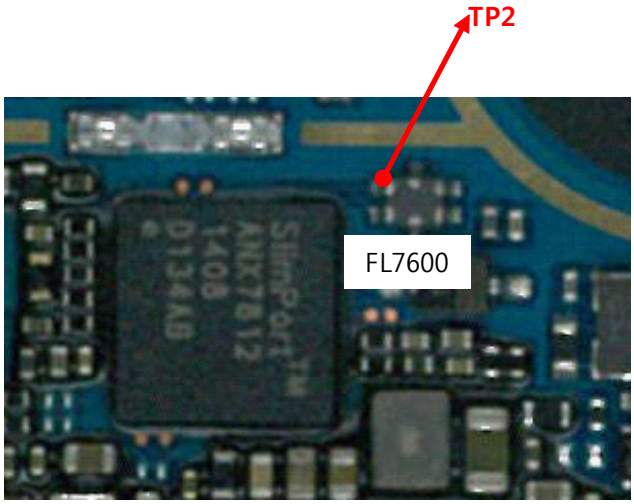

3. 9. Audio

3. 9. 1. Overview (Block Diagram)

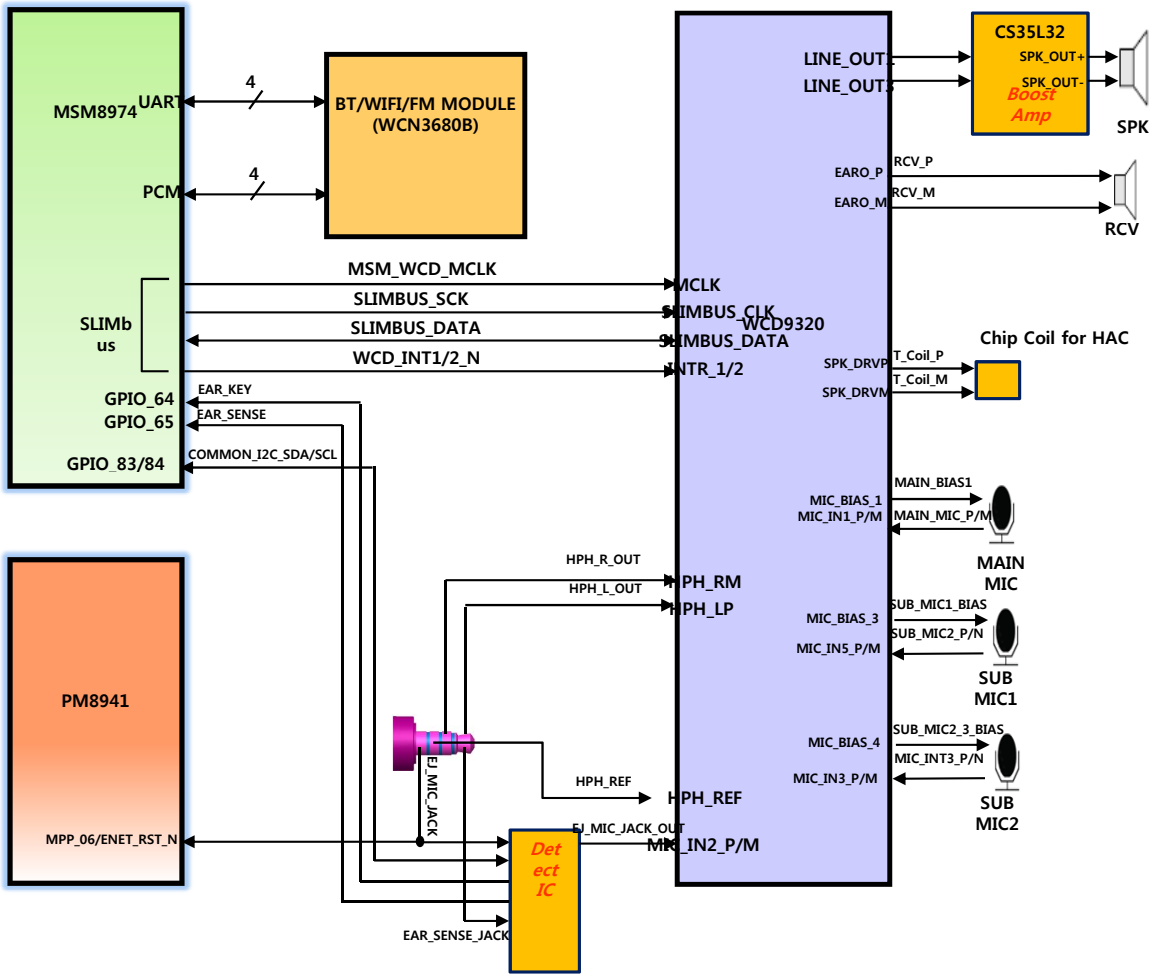

3. 9. 2. Speaker Trouble Shooting

It's trouble shooting guide for no sound case.
Speaker control signals are generate by by MSM8974(U2100), WCD9320(U6100) CS35L32(U6200)

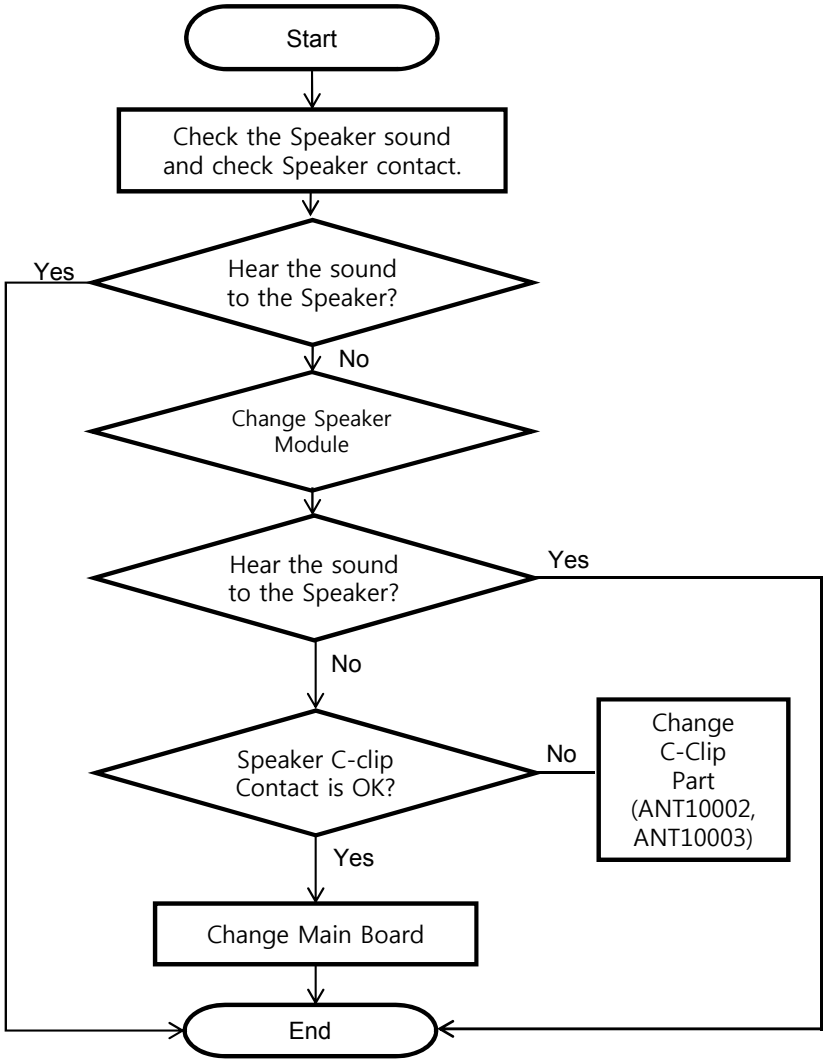

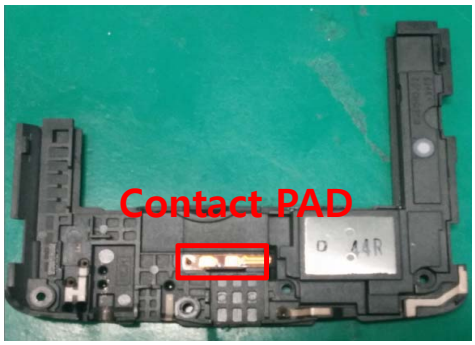

3. 9. 3. Receiver Trouble Shooting

Receiver control signals are generate by MSM8974(U2100), WCD9320(U6100)
Voice Receiver path as below :
MSM8974 → WCD9320 → RCV_N / RCV_P → Receiver

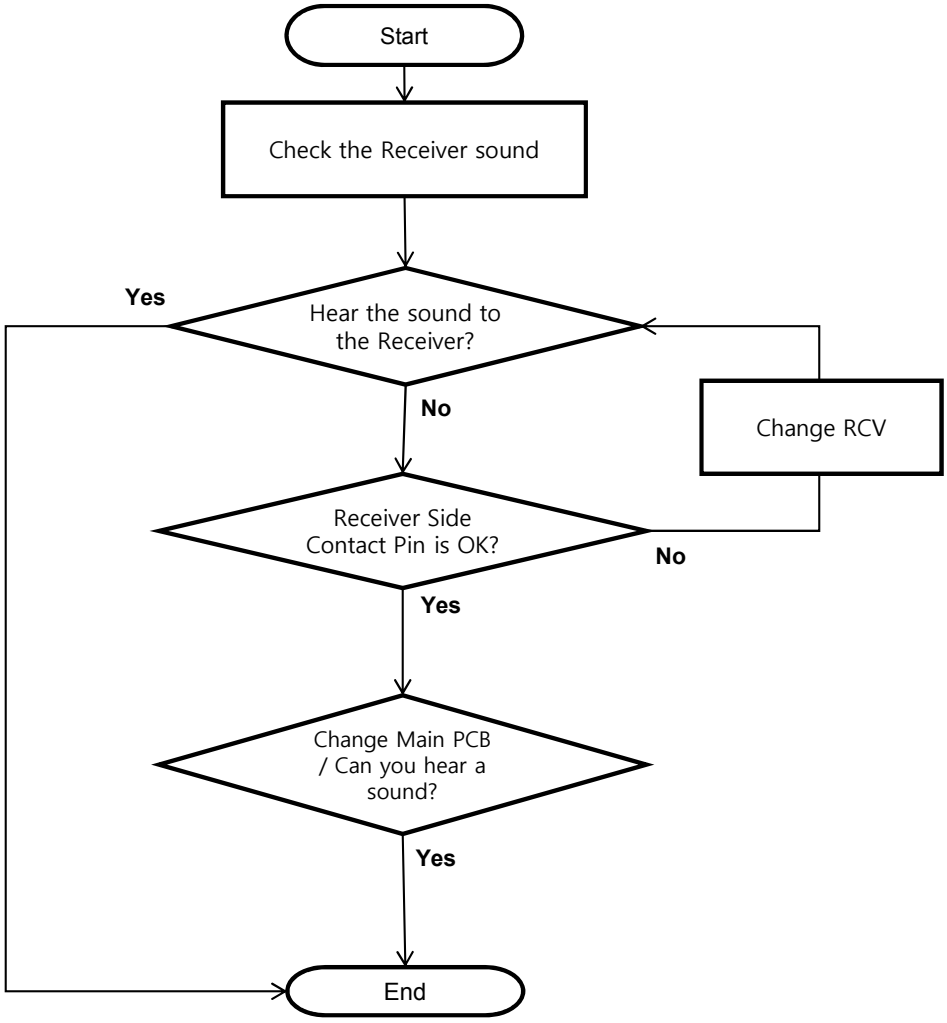

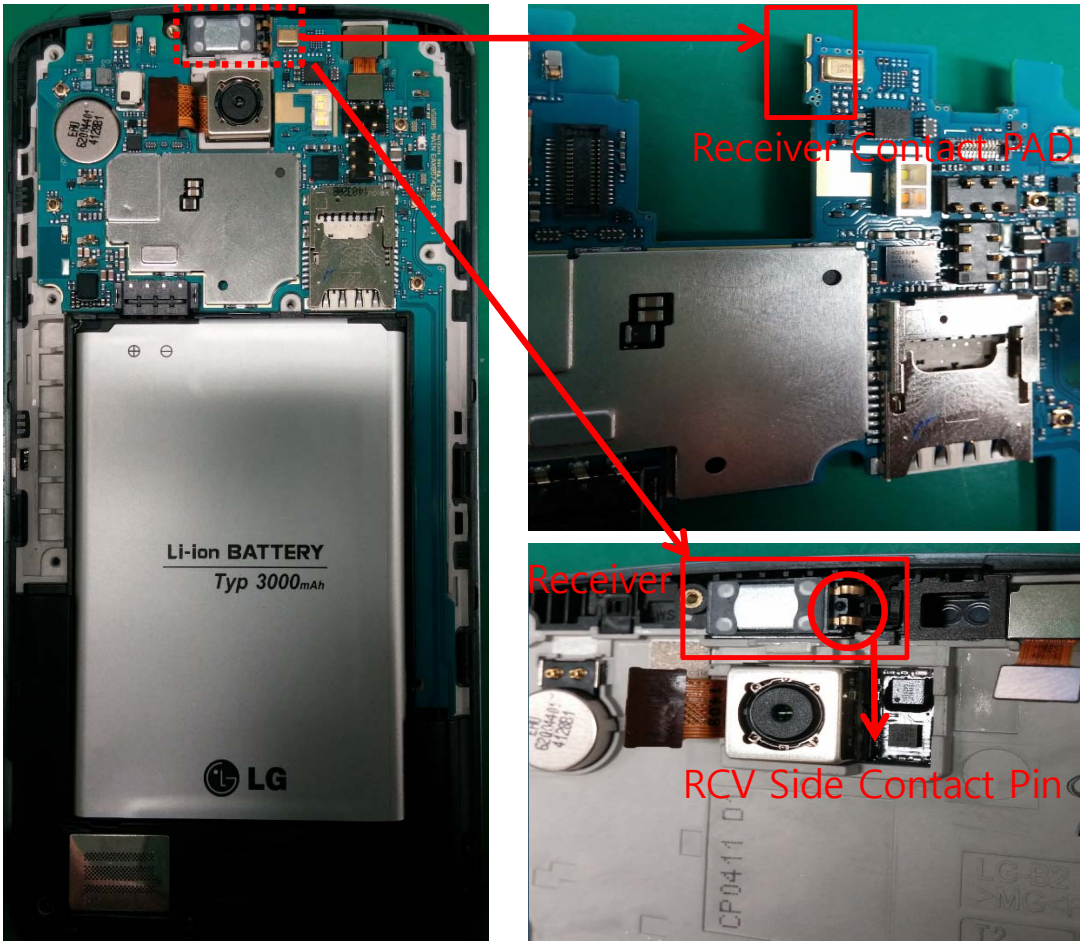

In case of No Receiver sound, not only Receiver fault but Mic fault.
You must check first voice recording test. After voice recording you can hear a recording sound, receiver path or parts is something wrong.

3. 9. 4. Main MIC Trouble Shooting

Main Mic located on 10Layer of Main PCB
It's operating voice call(except speakerphone), voice recording, camcorder recording

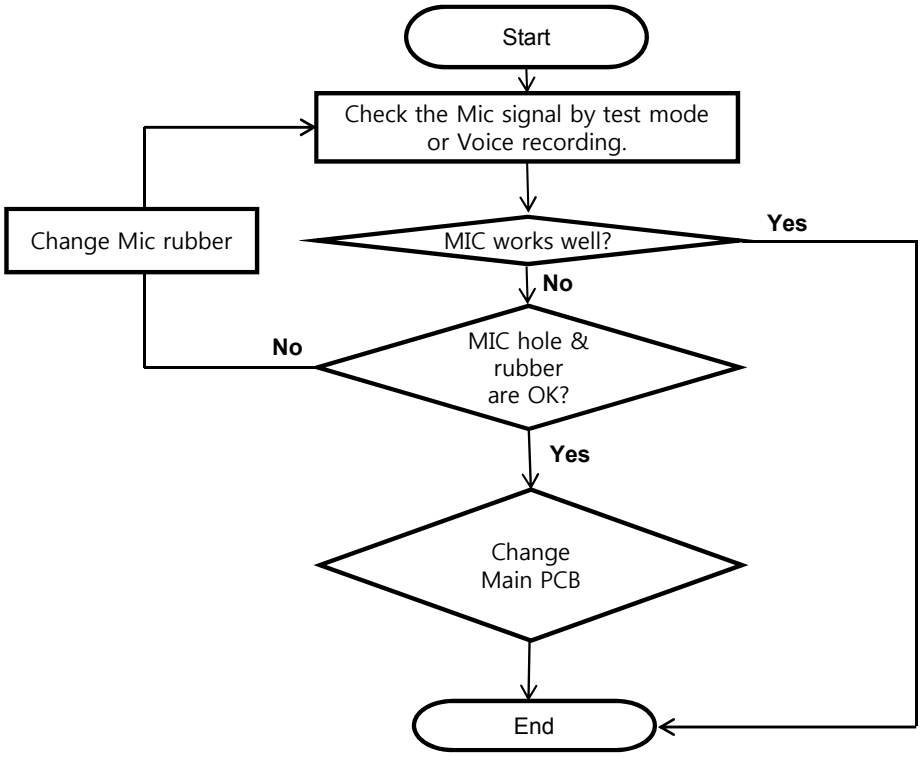

Check Main Mic Rubber & hole.

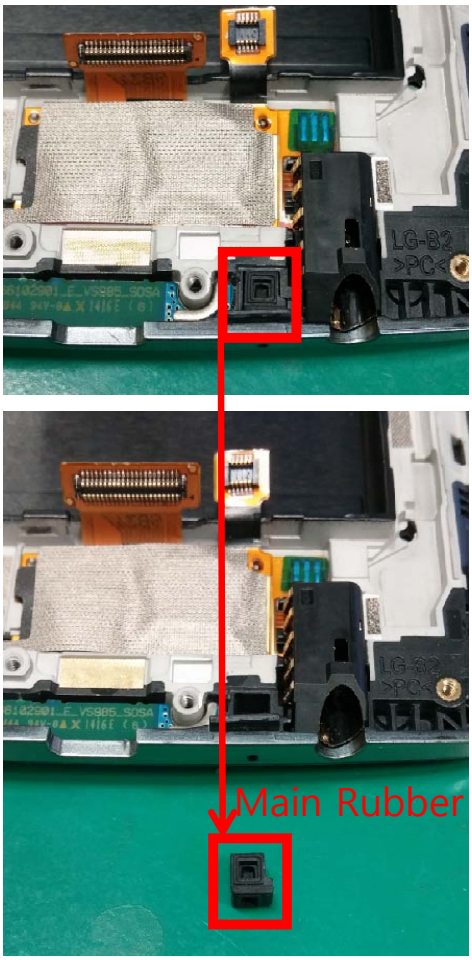

3. 9. 4. Front MIC Trouble Shooting

Front Mic located on 10Layer of Main PCB
It's operating camcorder recording

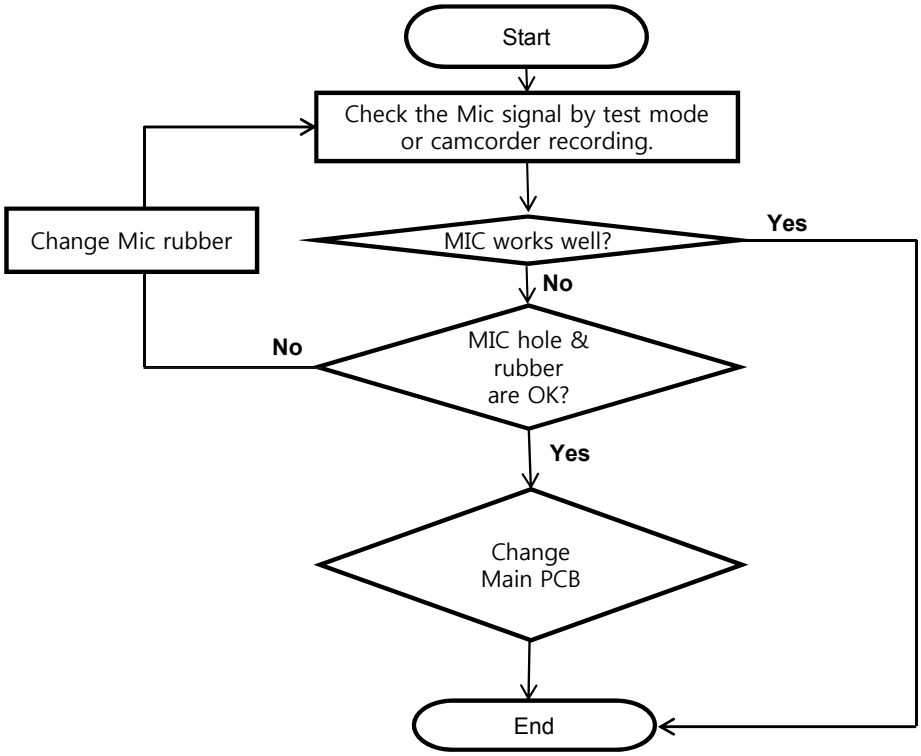

Check Main Mic Rubber & hole.

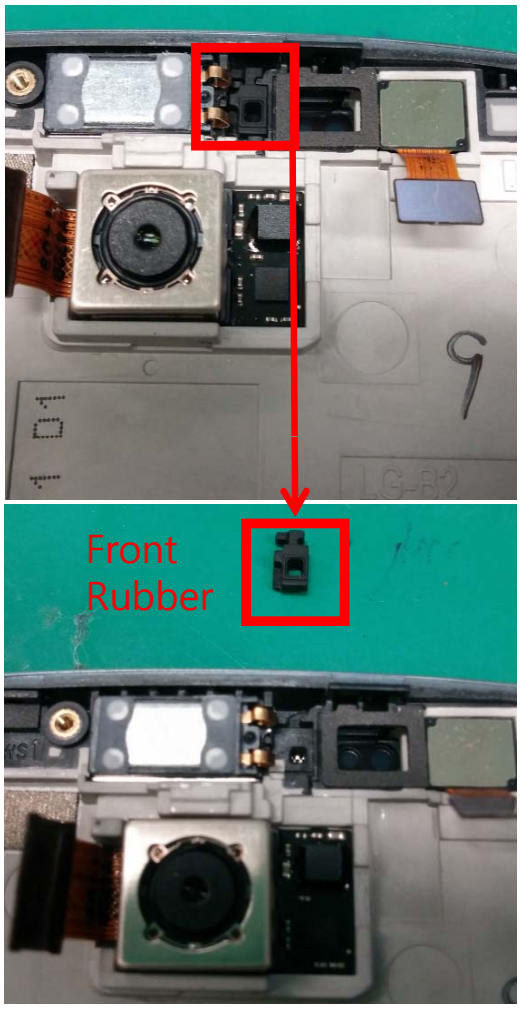

3. 9. 4. Top MIC Trouble Shooting

Top Mic located on 10Layer of Main PCB
It's operating speakerphone call

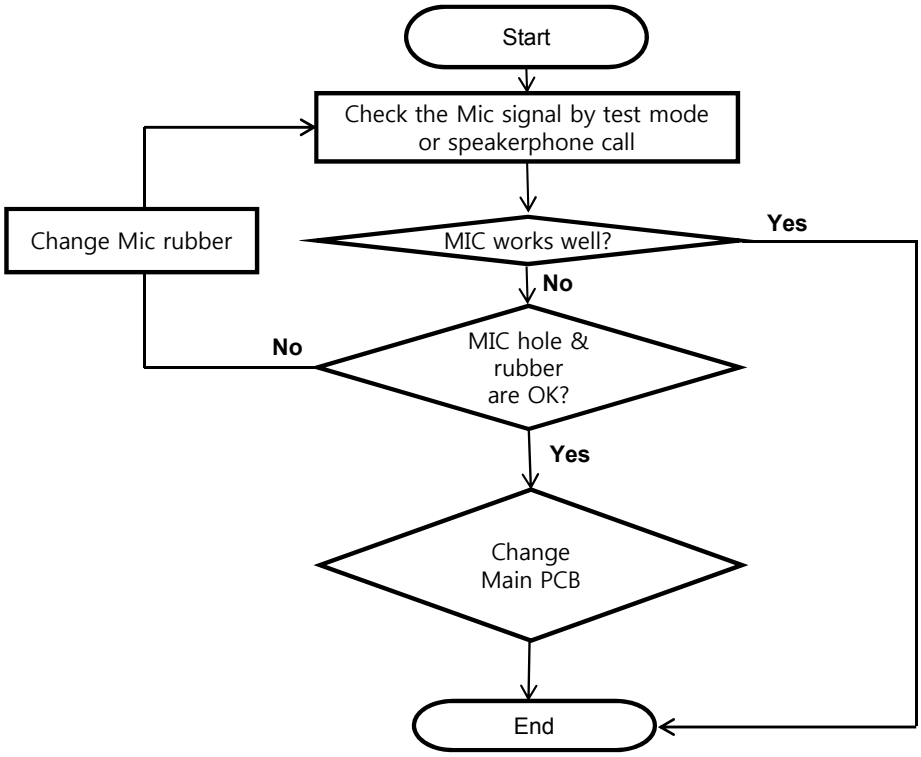

Check Top Mic Rubber & hole.

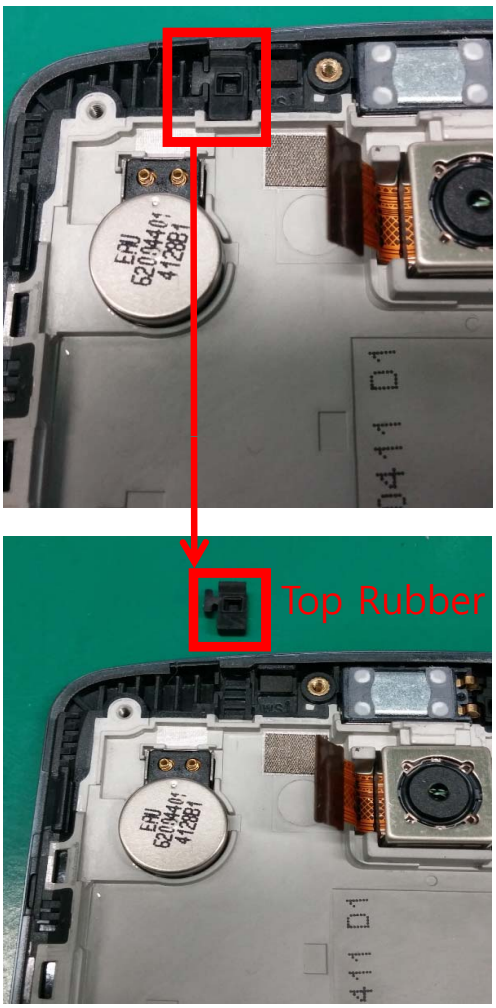

3. 9. 5. Ear-MIC Trouble Shooting

Ear-Mic control signals are generate by by MSM8974(U2100), WCD9320(U6100), MAX14704(U6420)

Case A. Disable detected headset insert.
Case B. No Sound from Headset

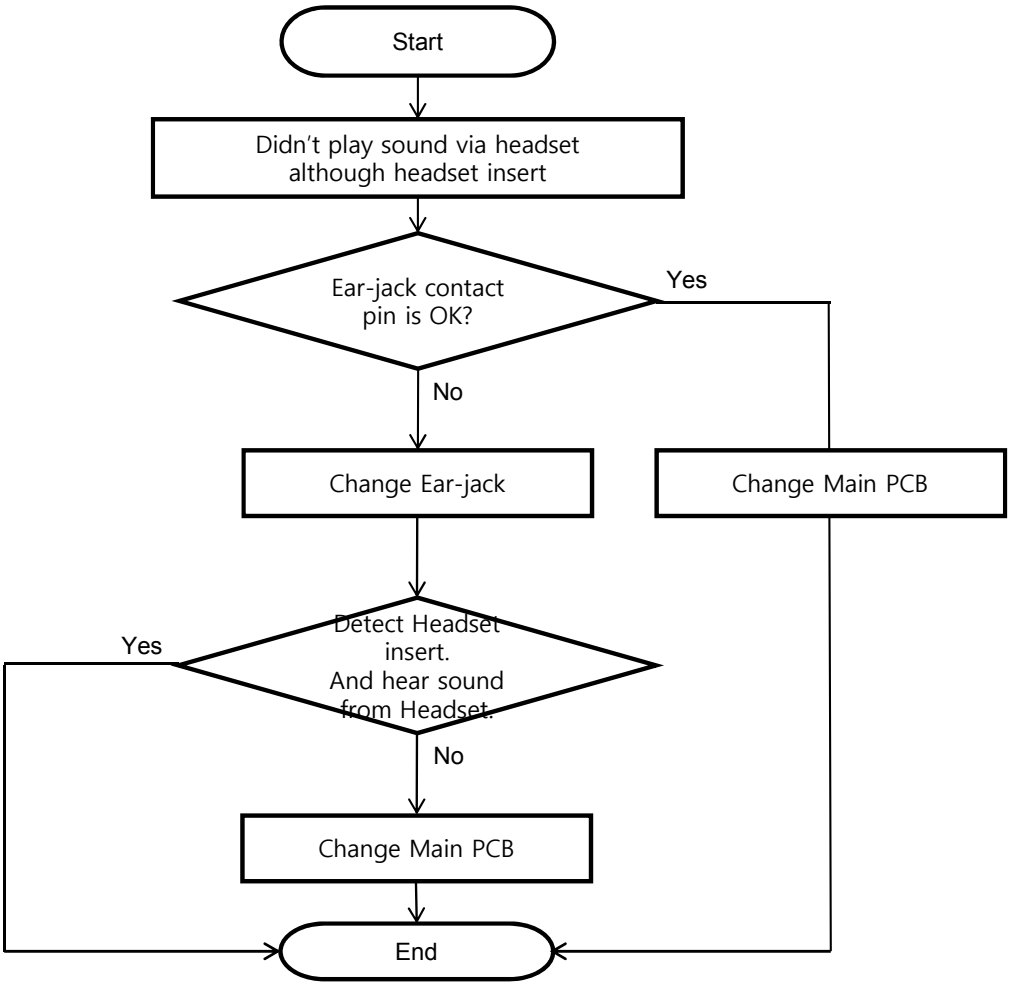

Case B. No Sound from Headset

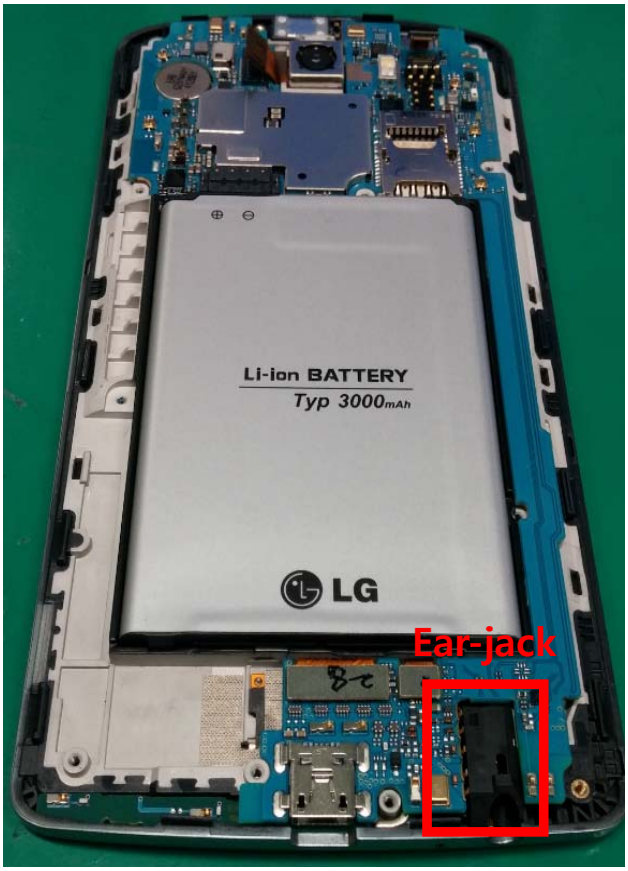

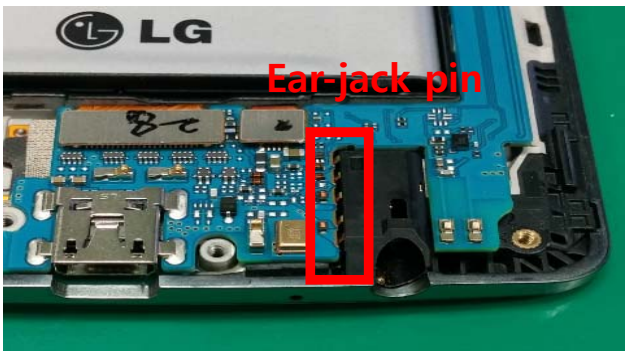

3. 10. Camera (13M/2.1M)

13M camera control signals are generated by MSM8974.

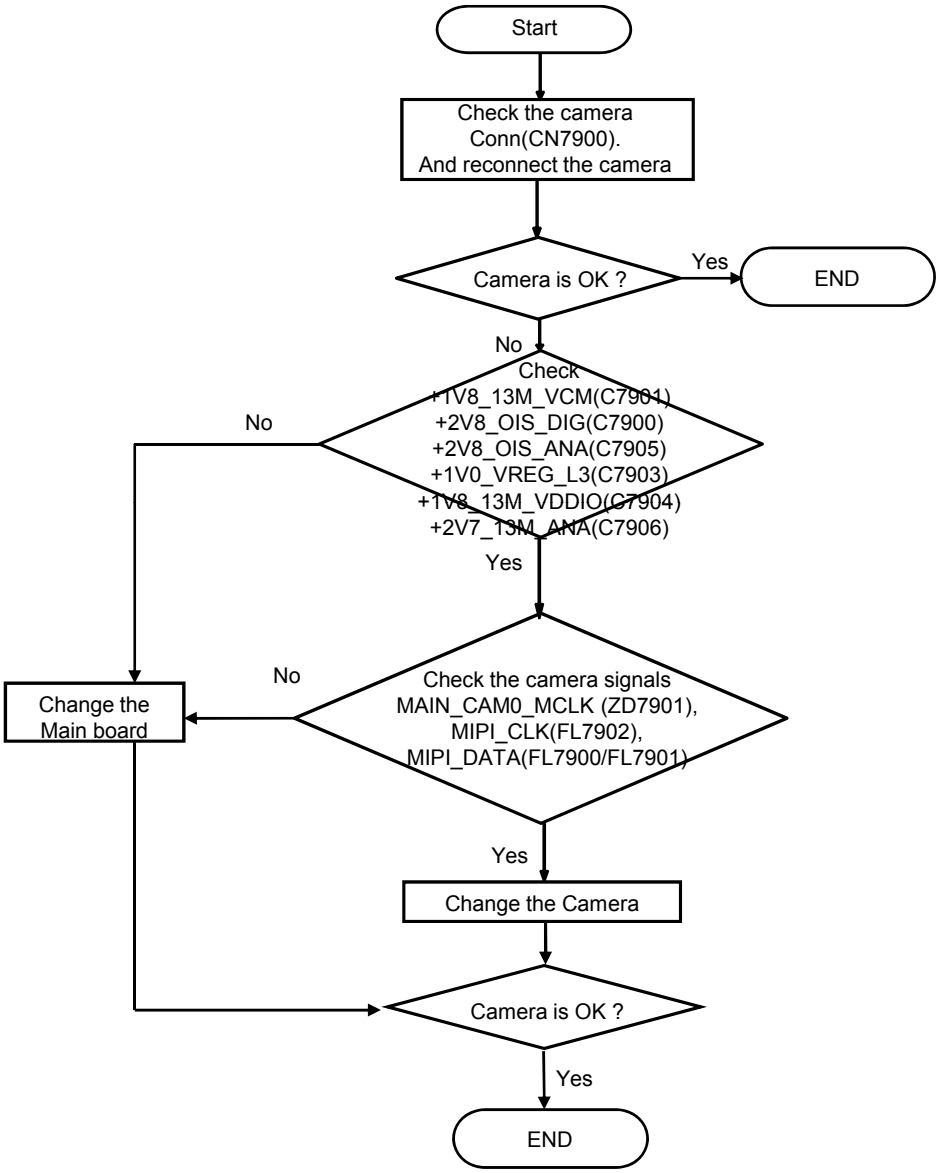

3. 10. 13M camera

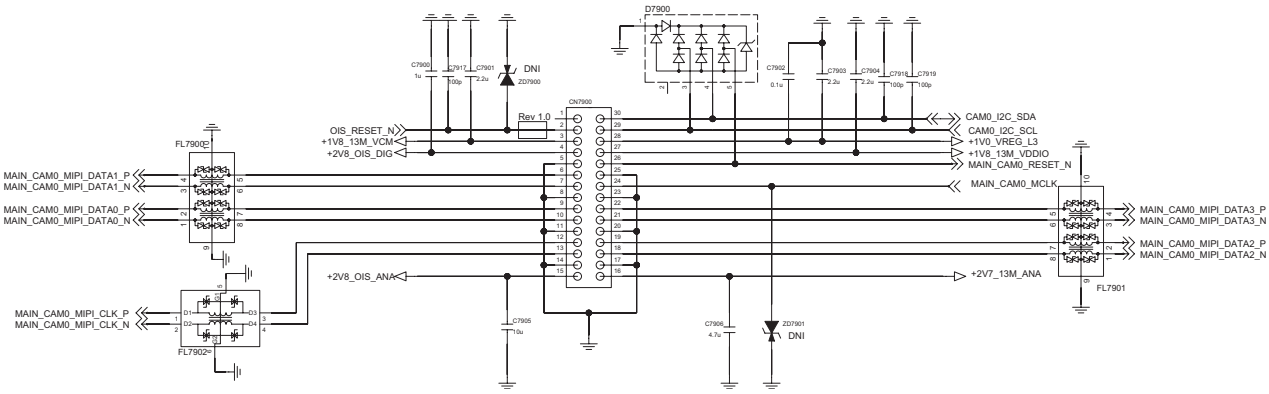

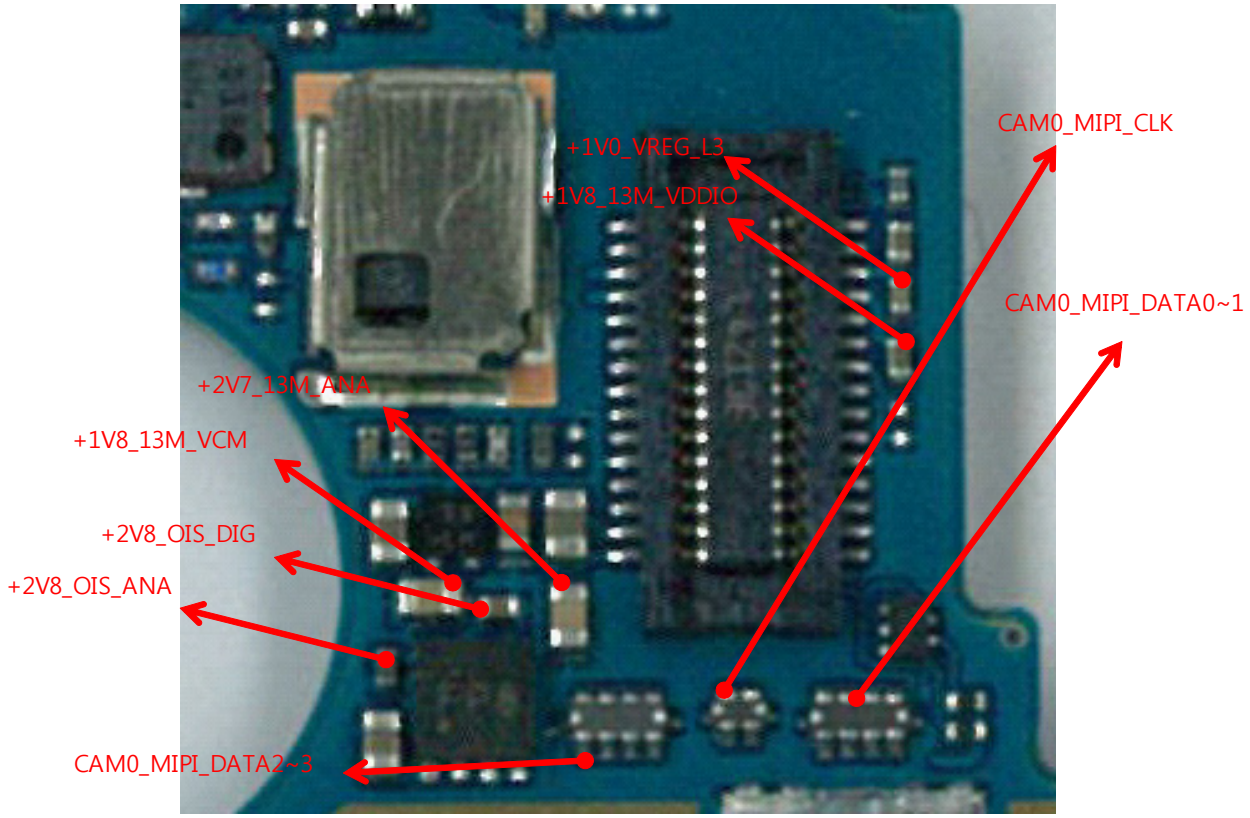

3. 10. Camera (2.1M)

2.4M camera control signals are generated by MSM8974

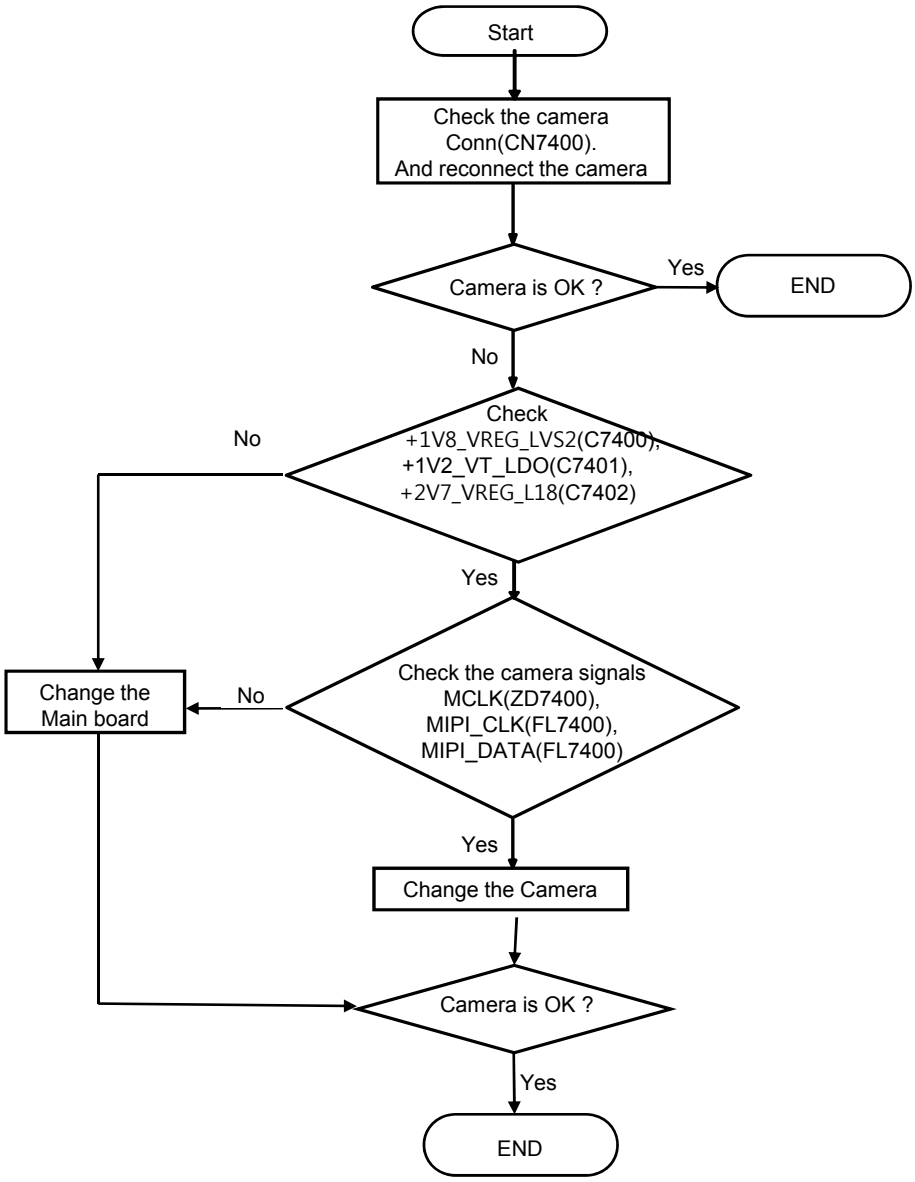

3. 10. 2.1M camera

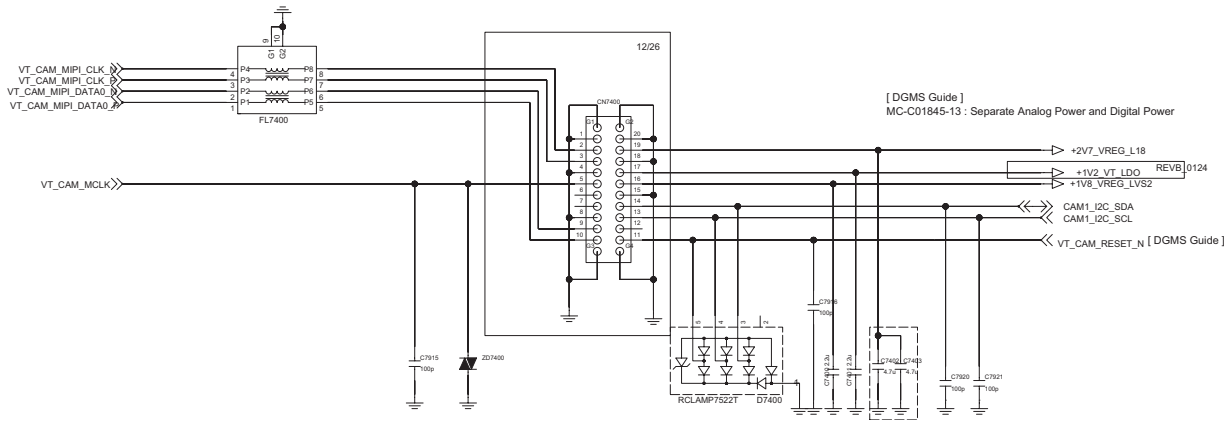

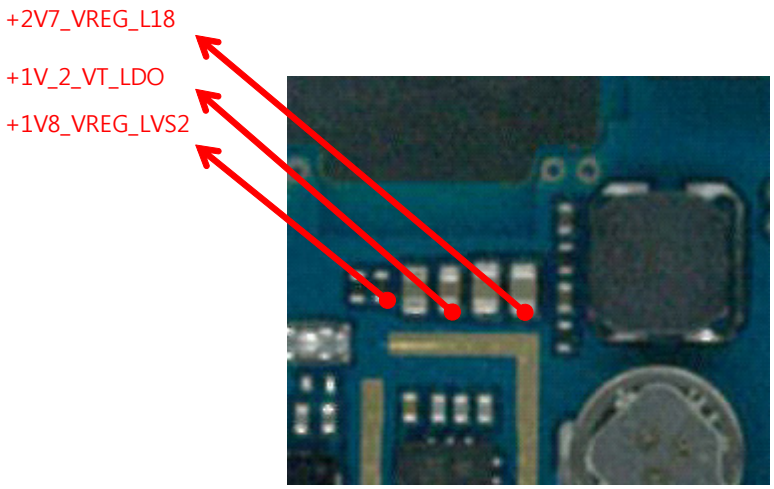

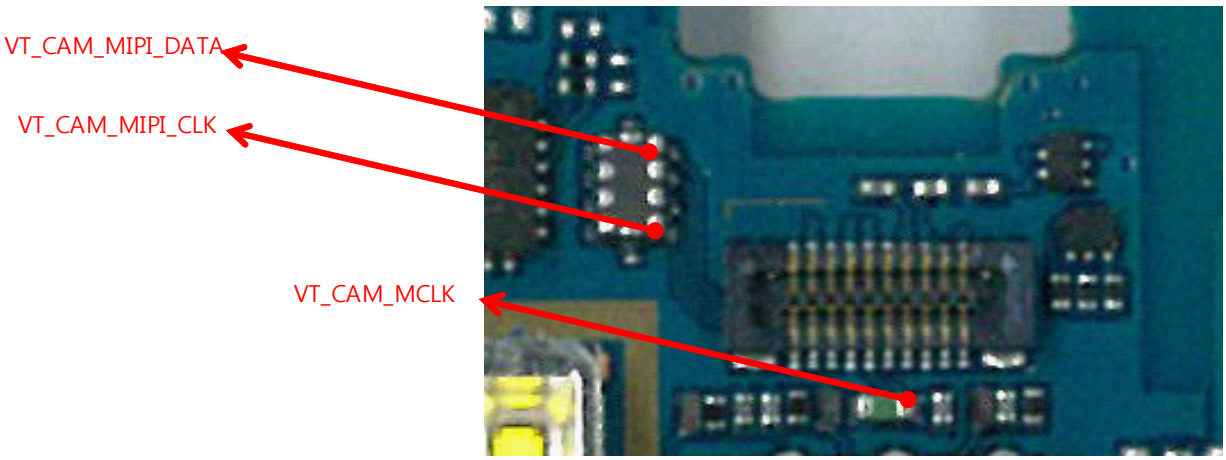

3. 11. LCD

Main LCD control signals are generated by MSM8974 . Those signal's path are : MSM8974-> LCD Module

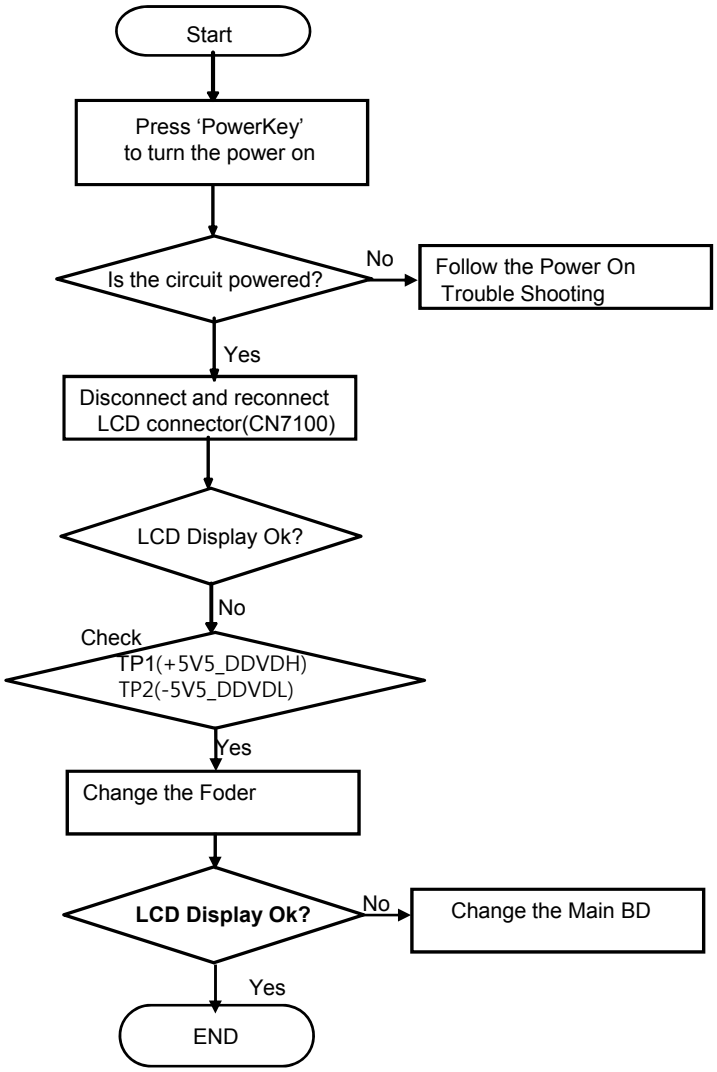

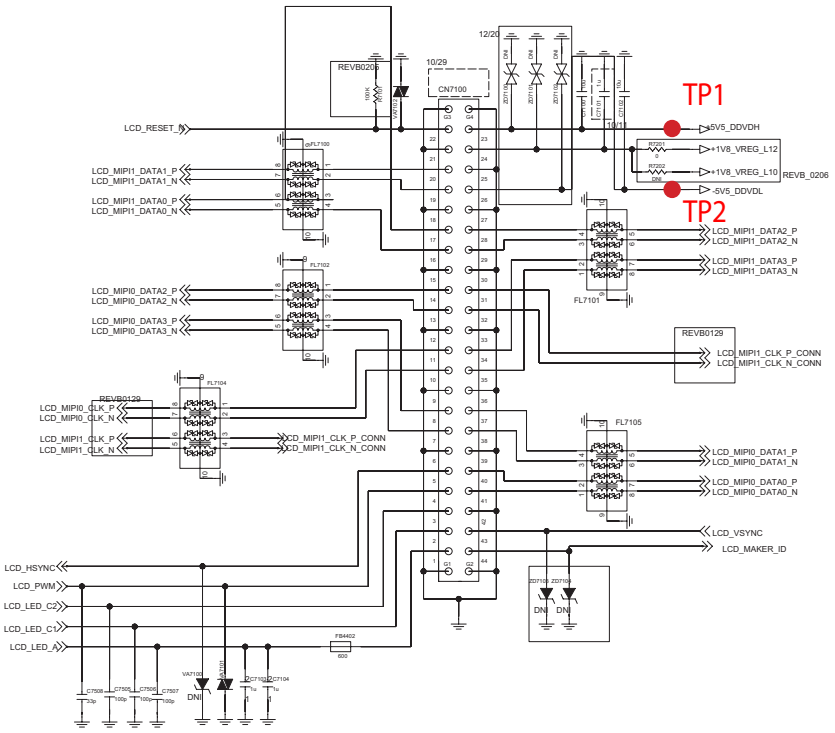

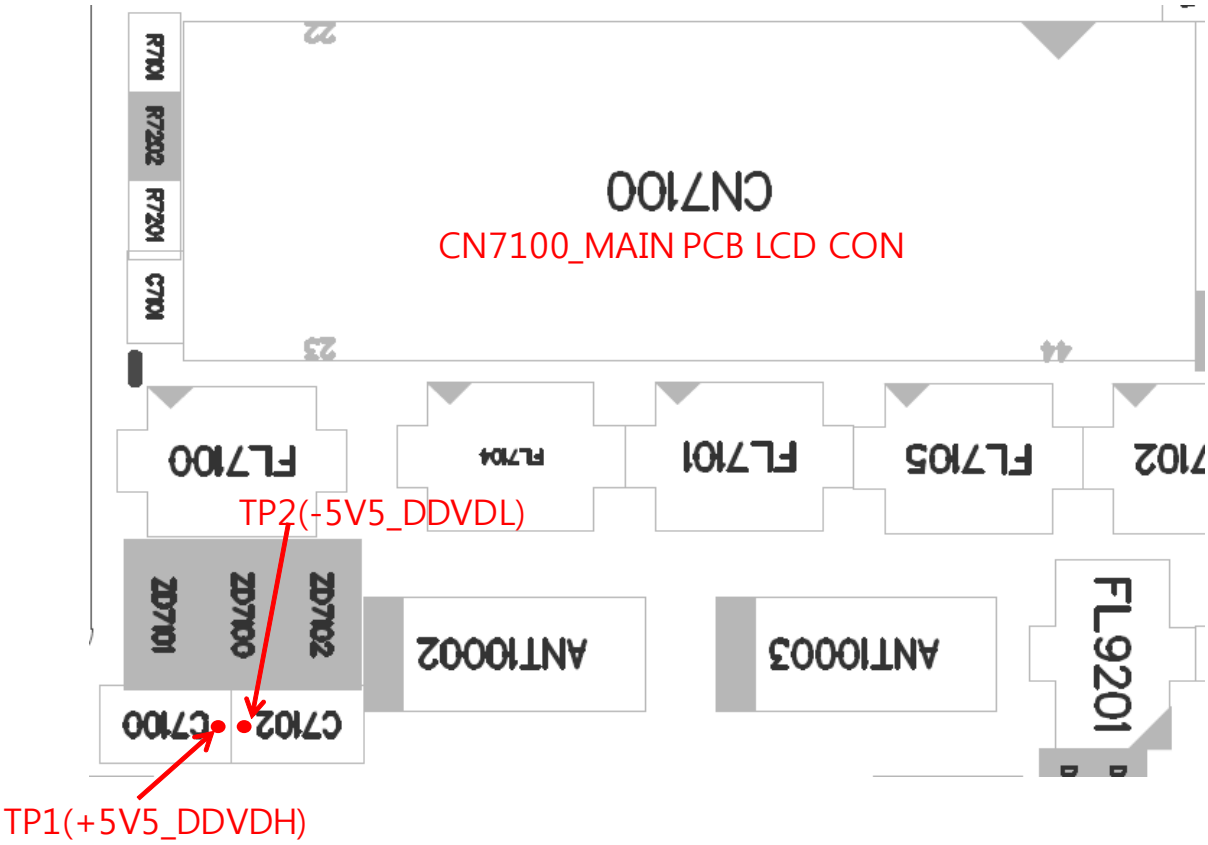

3.12. Motion&Gyro Sensor on/off TS

When the motion sensor does not work, the reason is chip problem.
If the motion sensor IC is damaged, it will do not work even thought power is supplied and MSM8974 controls normally. Therefore if the motion sensor is damaged, change the motion sensor IC or main board.

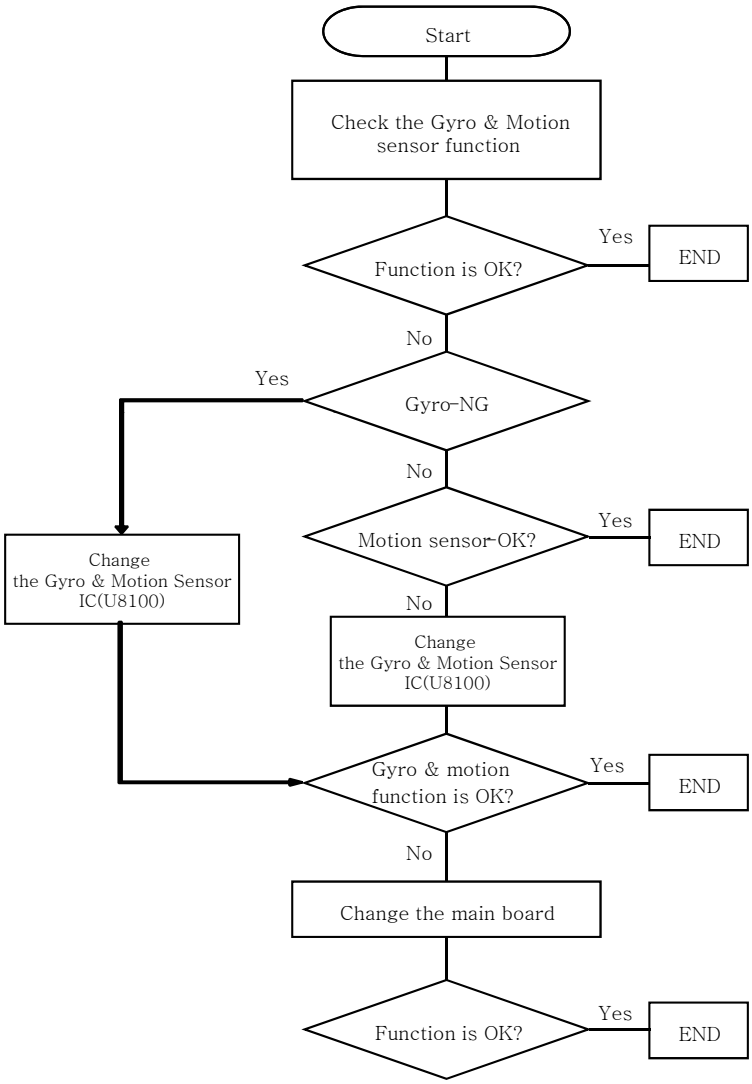

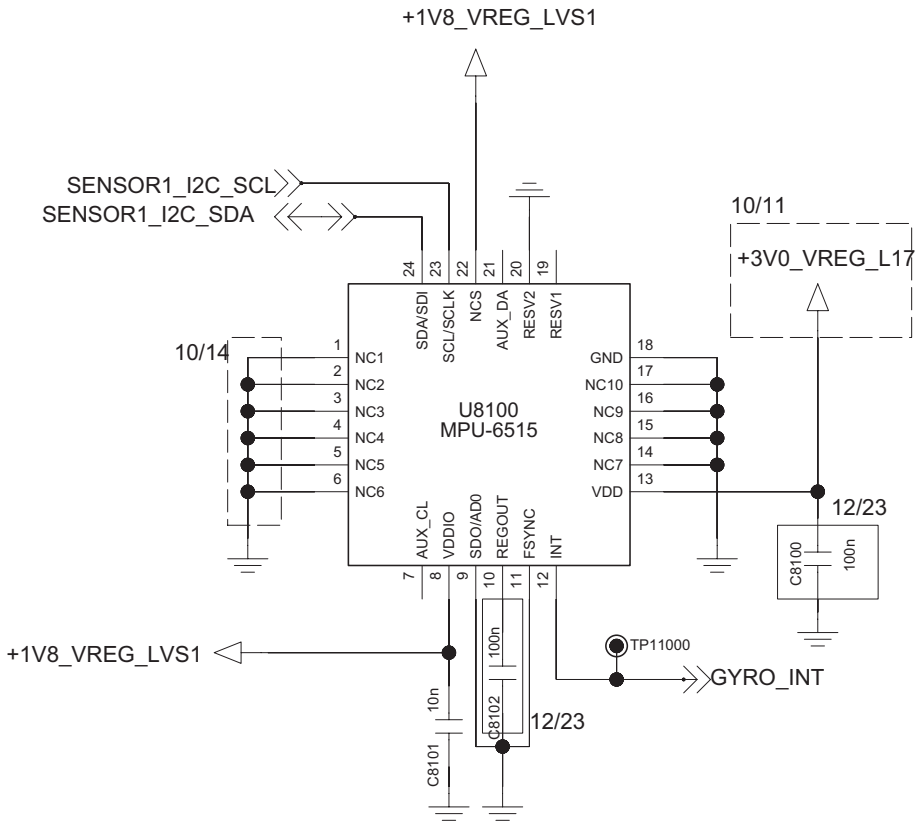

Gyro & Motion Sensor

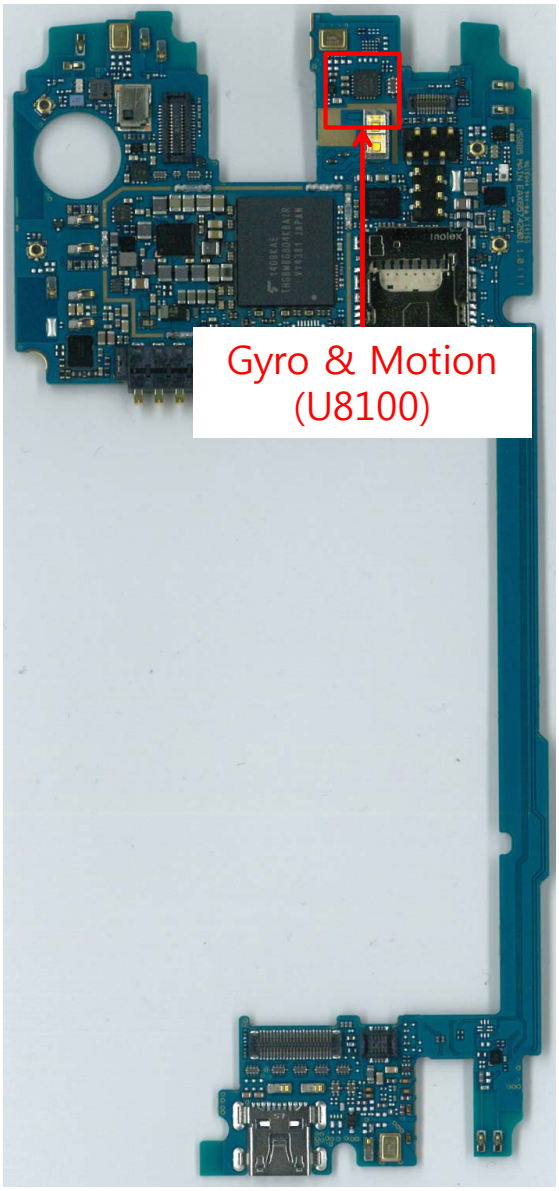

Main PCB Bottom

3.13. Compass Sensor on/off TS

The compass sensor is calibrated by the gyro & motion sensor data using SW algorithm. Therefore gyro & motion sensor error makes the compass sensor malfunction.

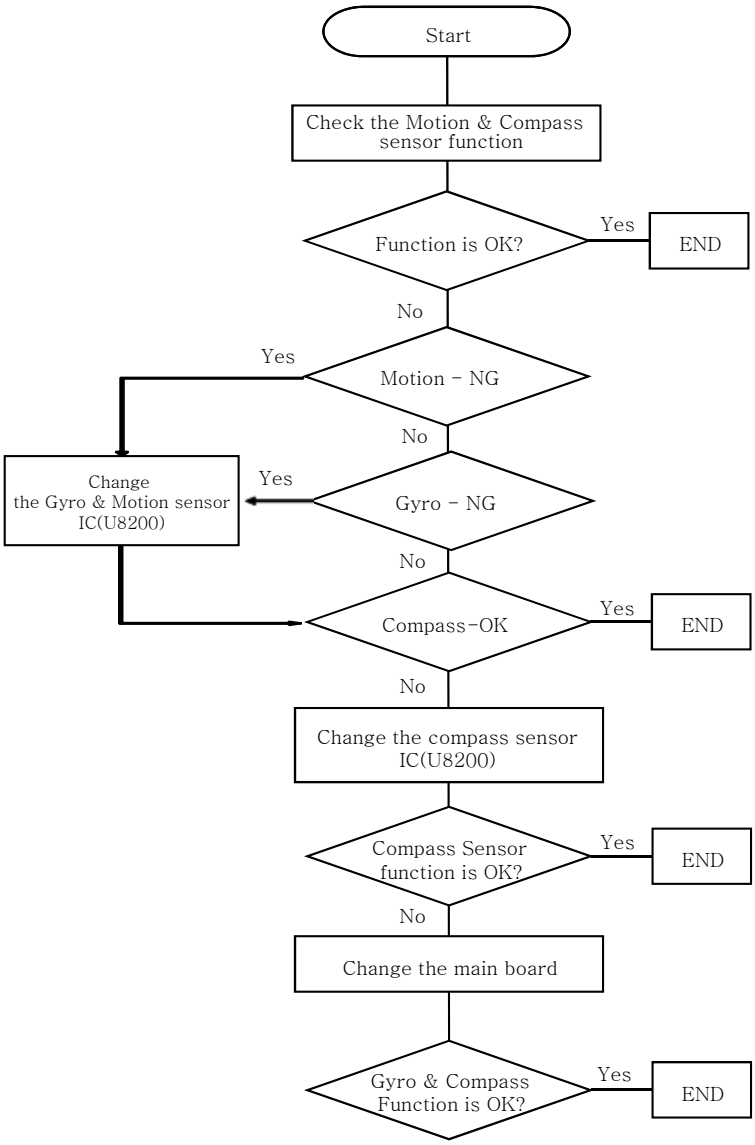

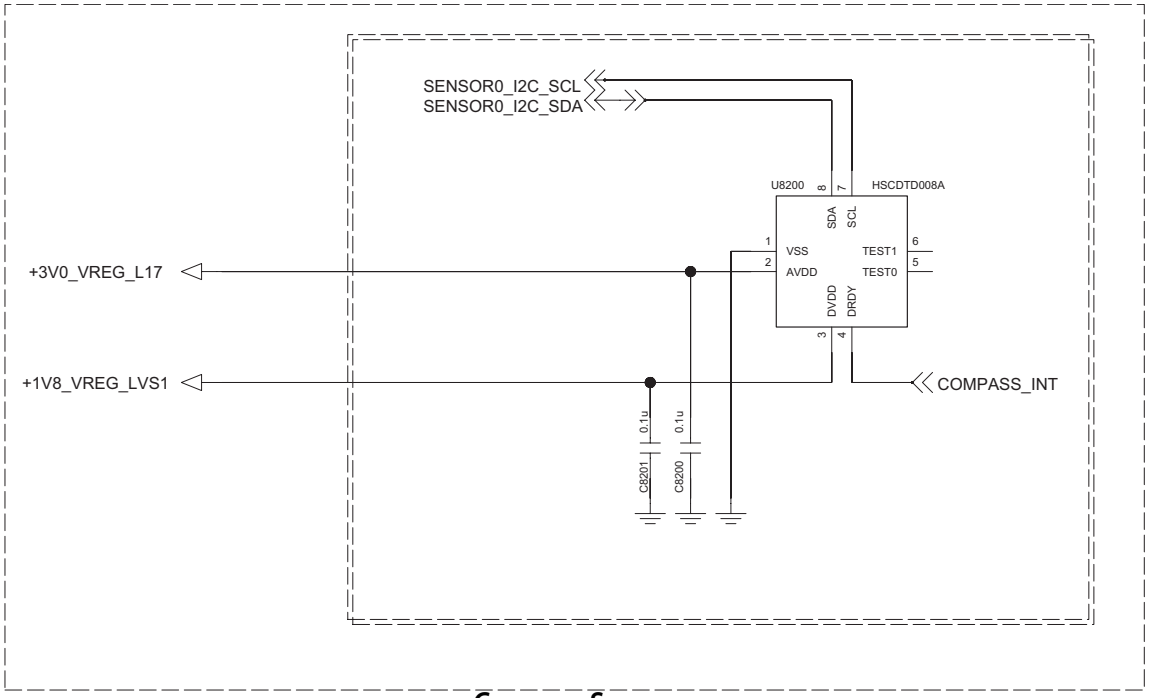

Compass Sensor

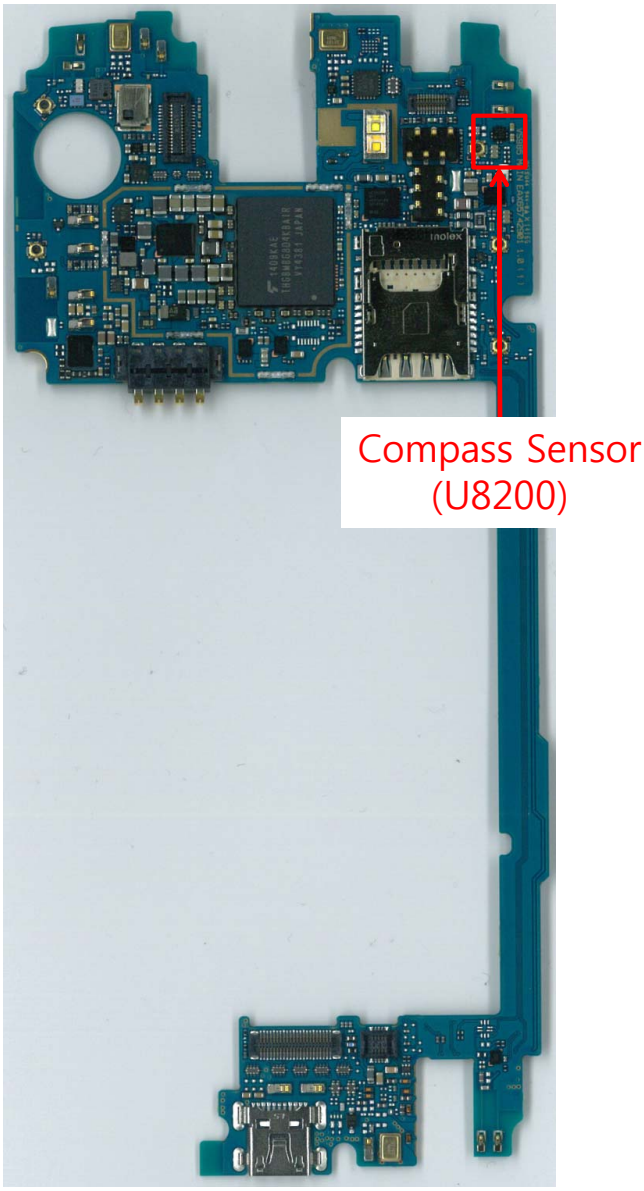

Main PCB Bottom

3.14. Proximity Sensor on/off TS

Proximity Sensor is worked as below:
Send Key click ➔ Phone number click ➔ Call connected ➔ Object moved at the sensor ➔ Control the screen's on/off operation automatically

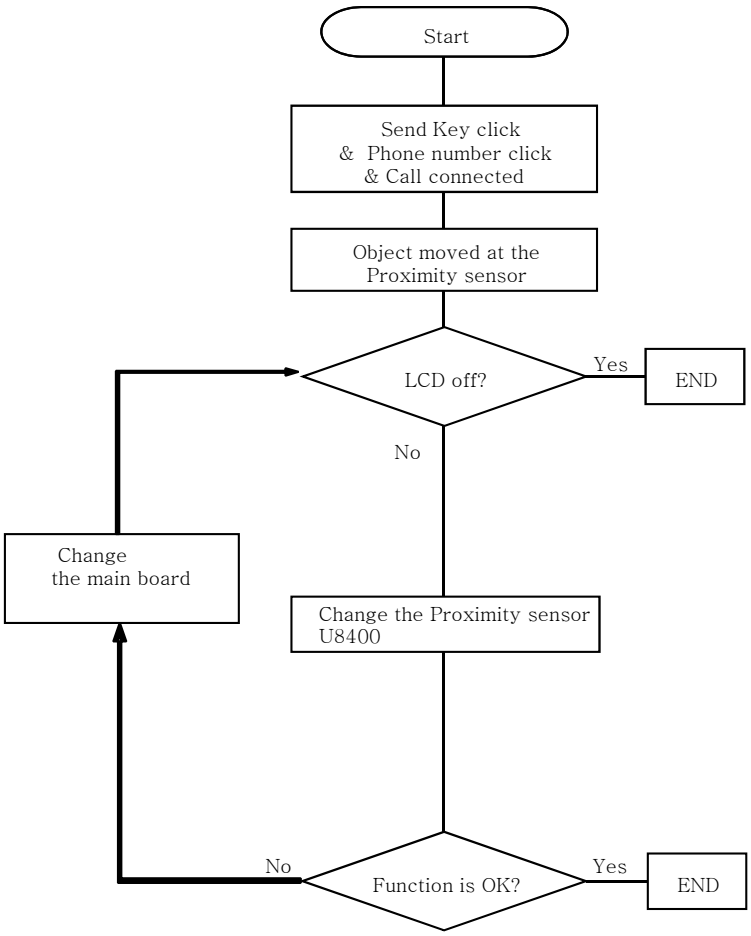

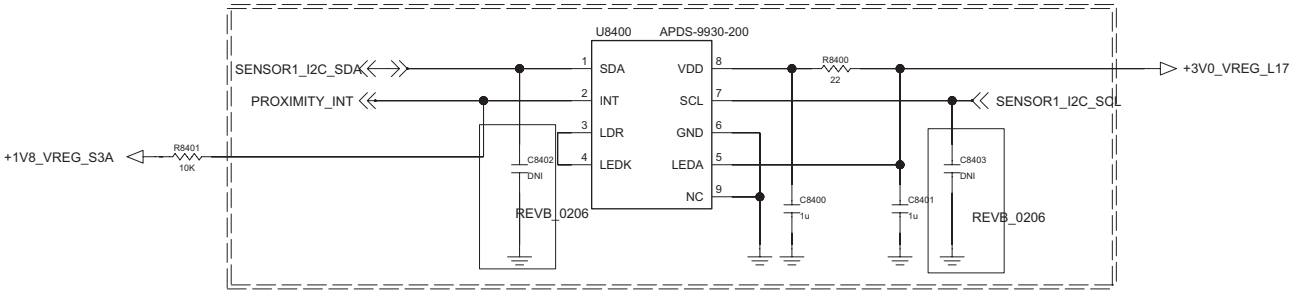

Main PCB Top

3.15. Ambient Sensor on/off TS

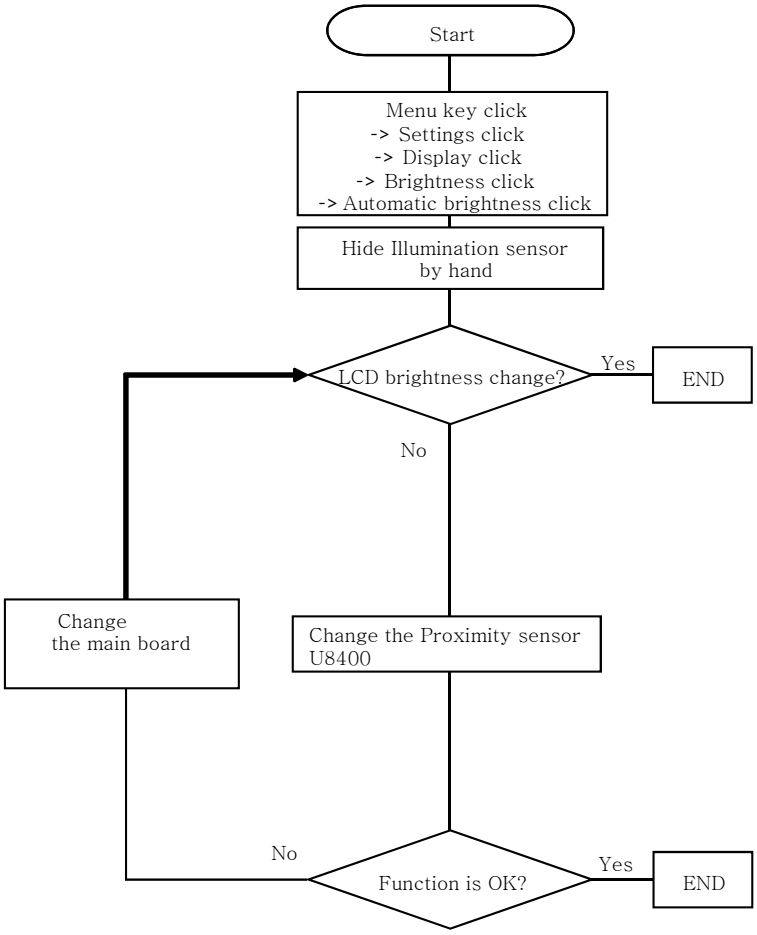

Same Method Proximity Sensor Trouble Shooting.
Because Ambient Sensor is also APDS-9930

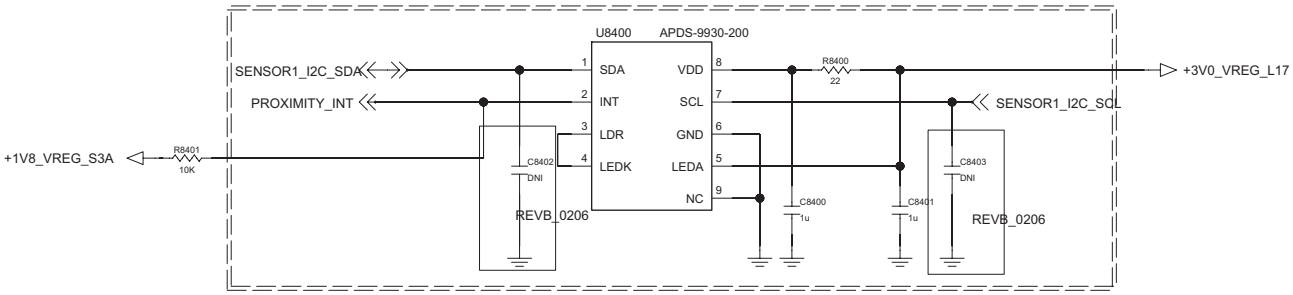

Main PCB Top

3.16. Touch Sensor Trouble Shooting

Touch control signals are generated by touch sensor S3404B

Those signal's path ? S3404B -> MSM8974 through I2C Interface

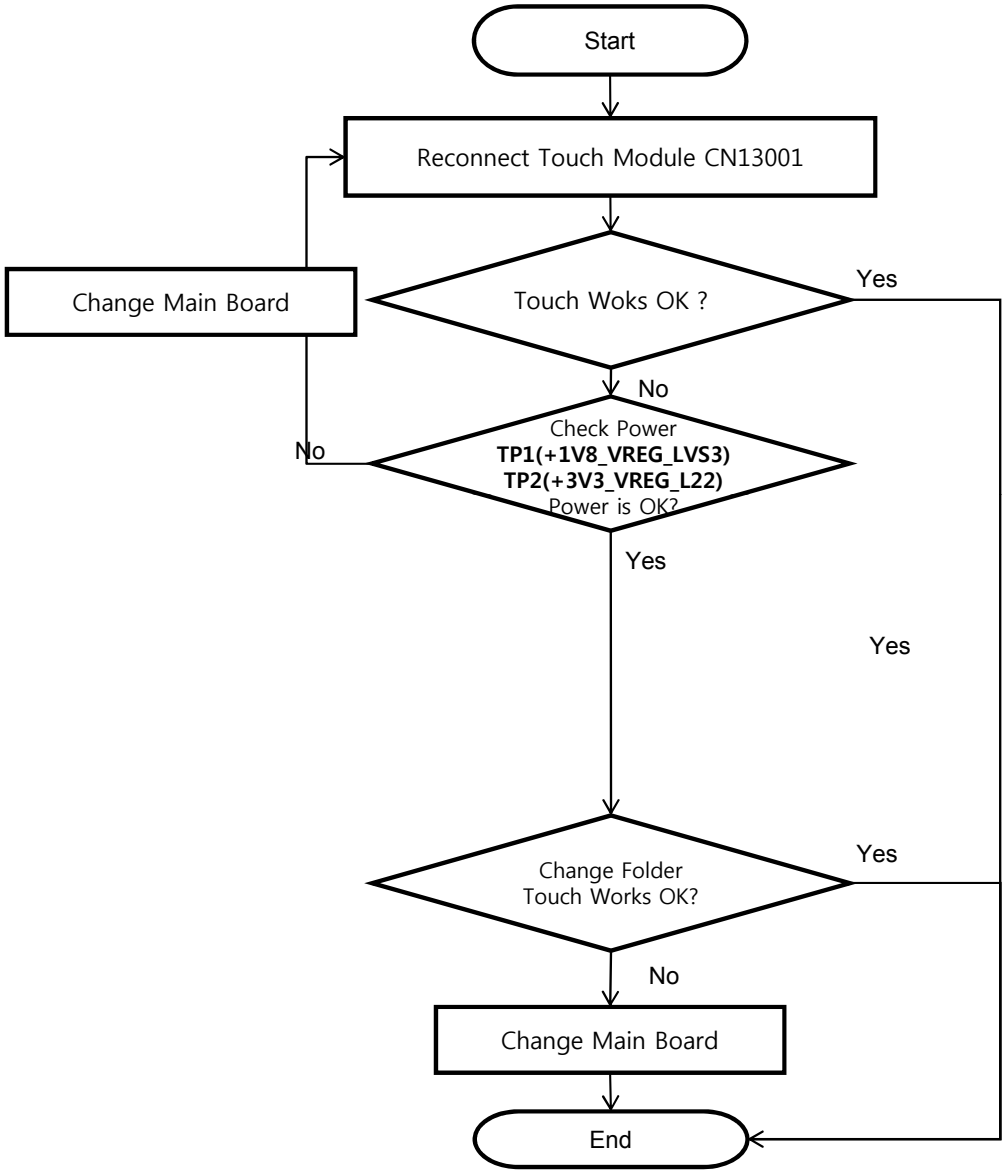

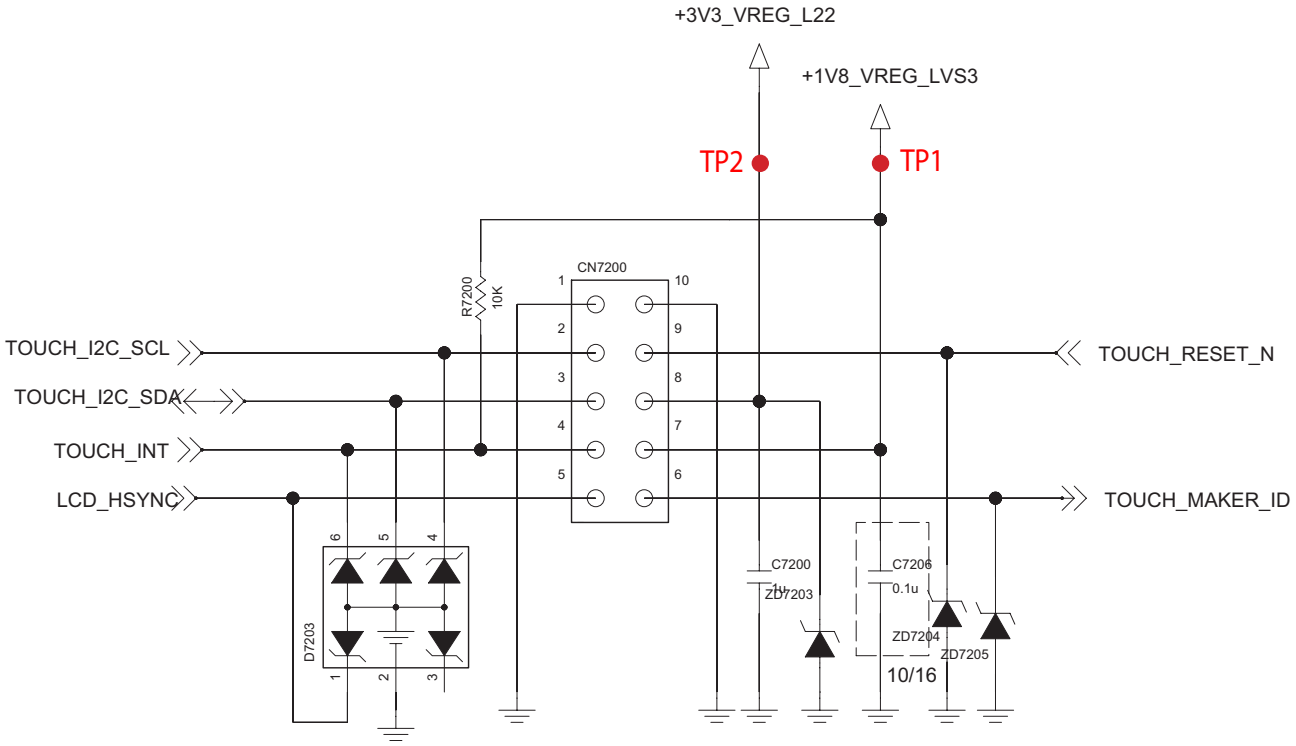

3.17. Wireless Charging

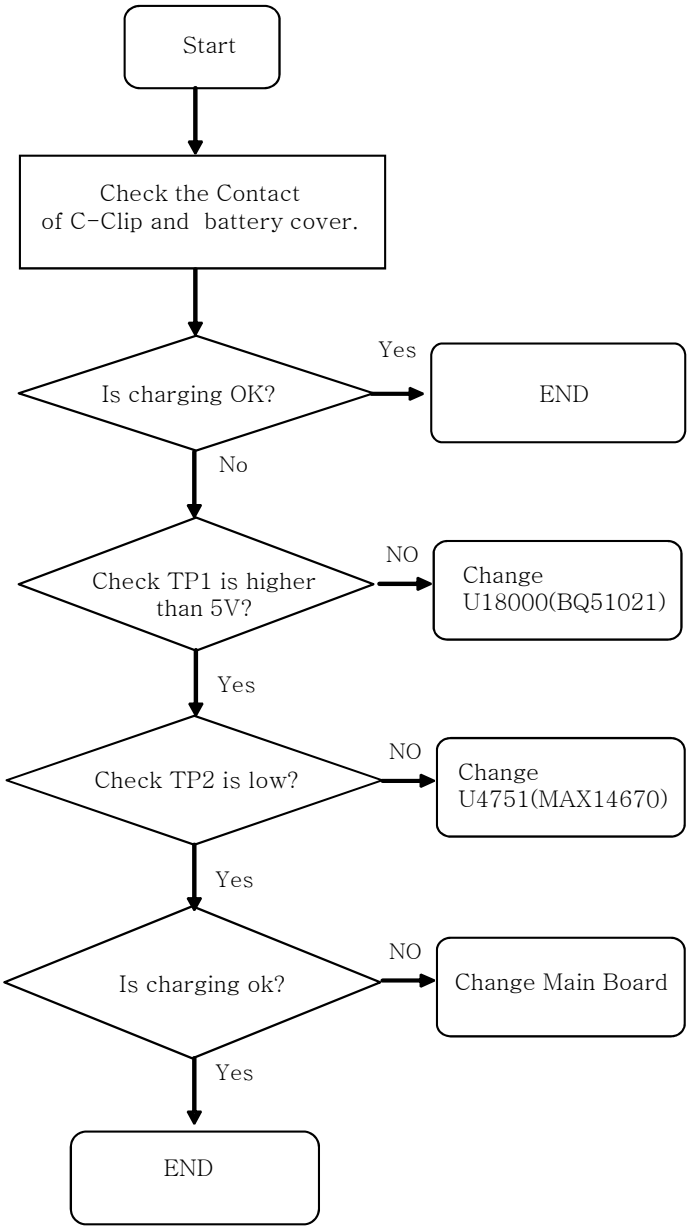

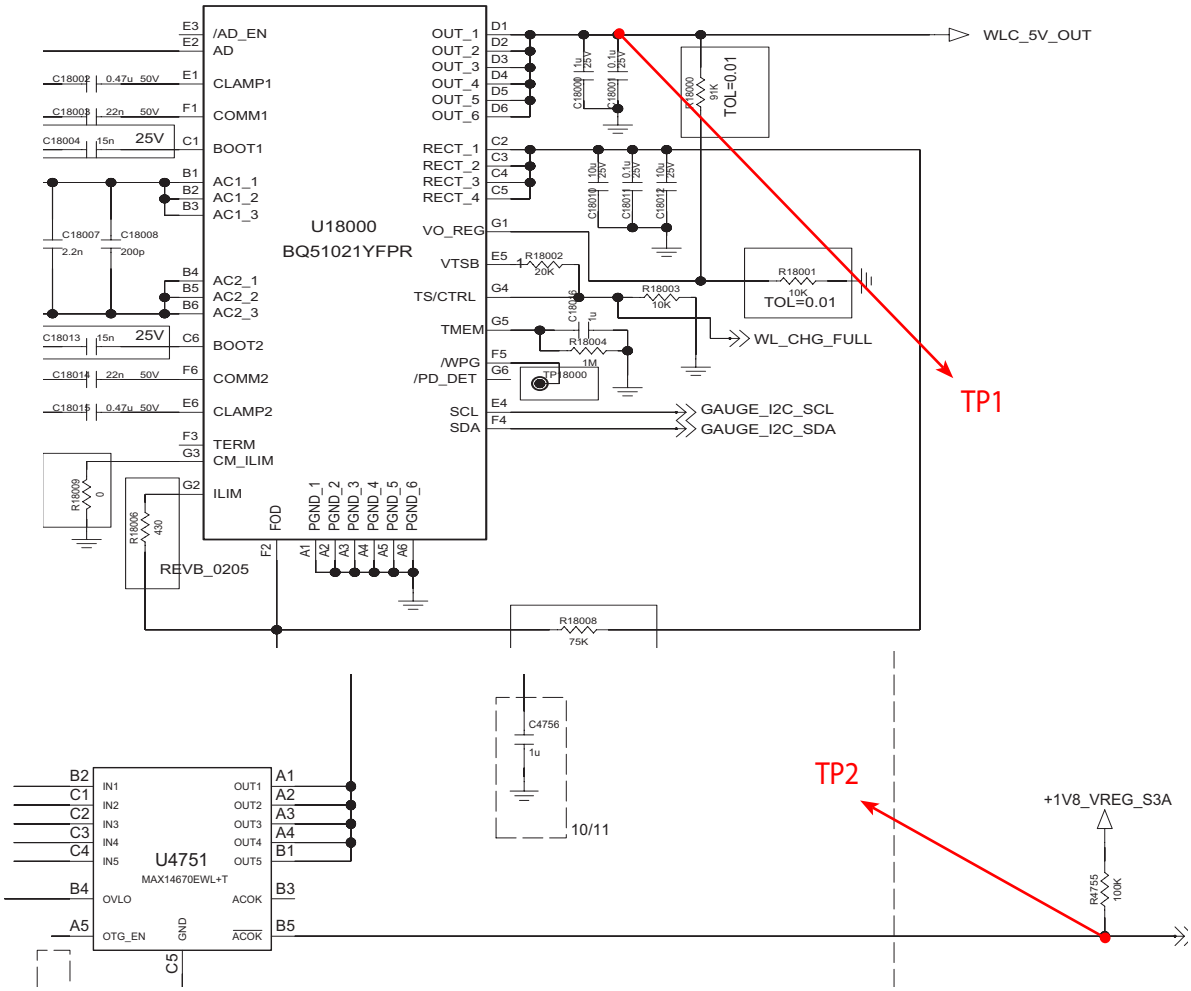

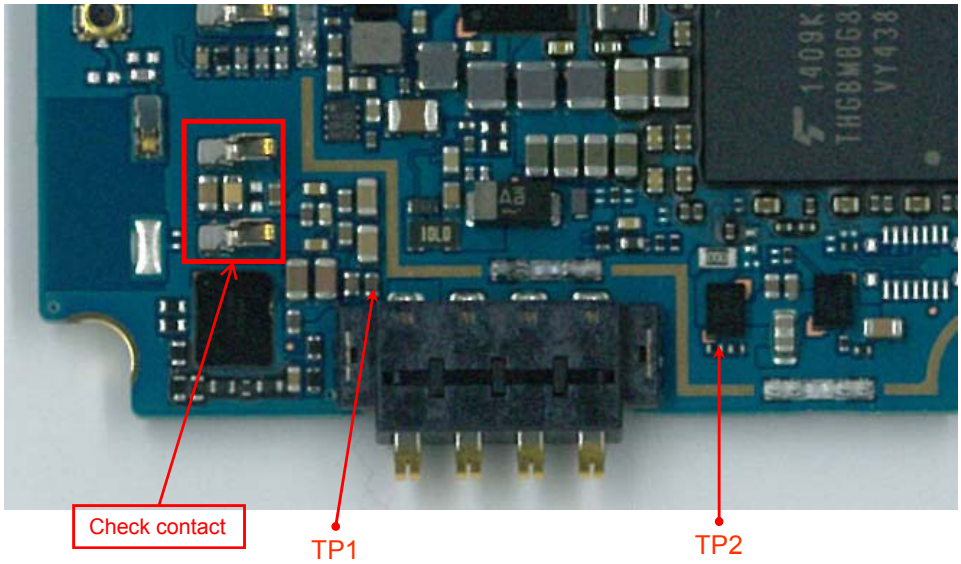

4. DOWNLOAD

TOOL INFORMATION			
TOOL VERSION	DLL NAME	USB DRIVER	
LGFLASHv160	LGAS985_20140820_LGFLASHv160_Download	LGUnitedMobileDriver_S50MAN311AP22_ML_WHQL_Ver_3.11.3	
Please Check the Version to "B2B"			
H/W			
	Name	Part No.	SW
D/L Cable	Micro 5P (56-open-910K) USB DLC	RAD32167835	BIN

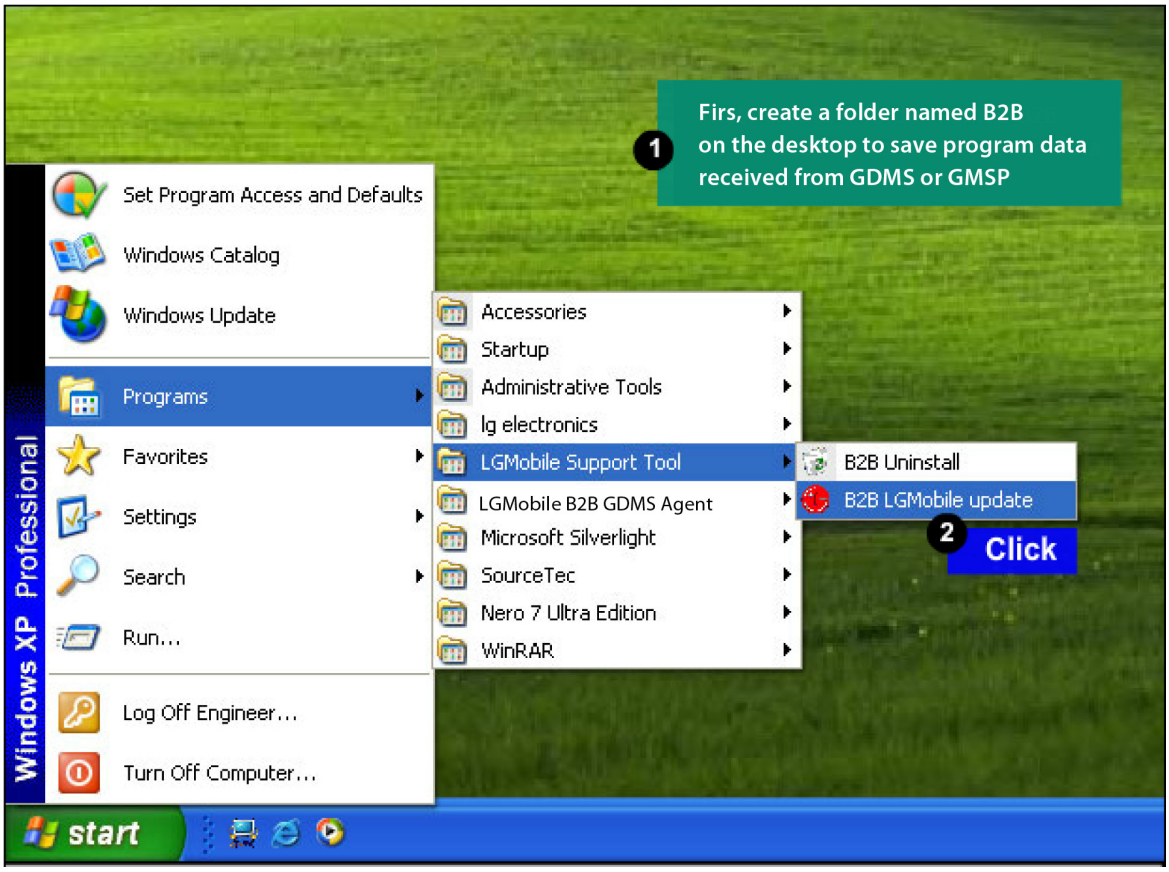

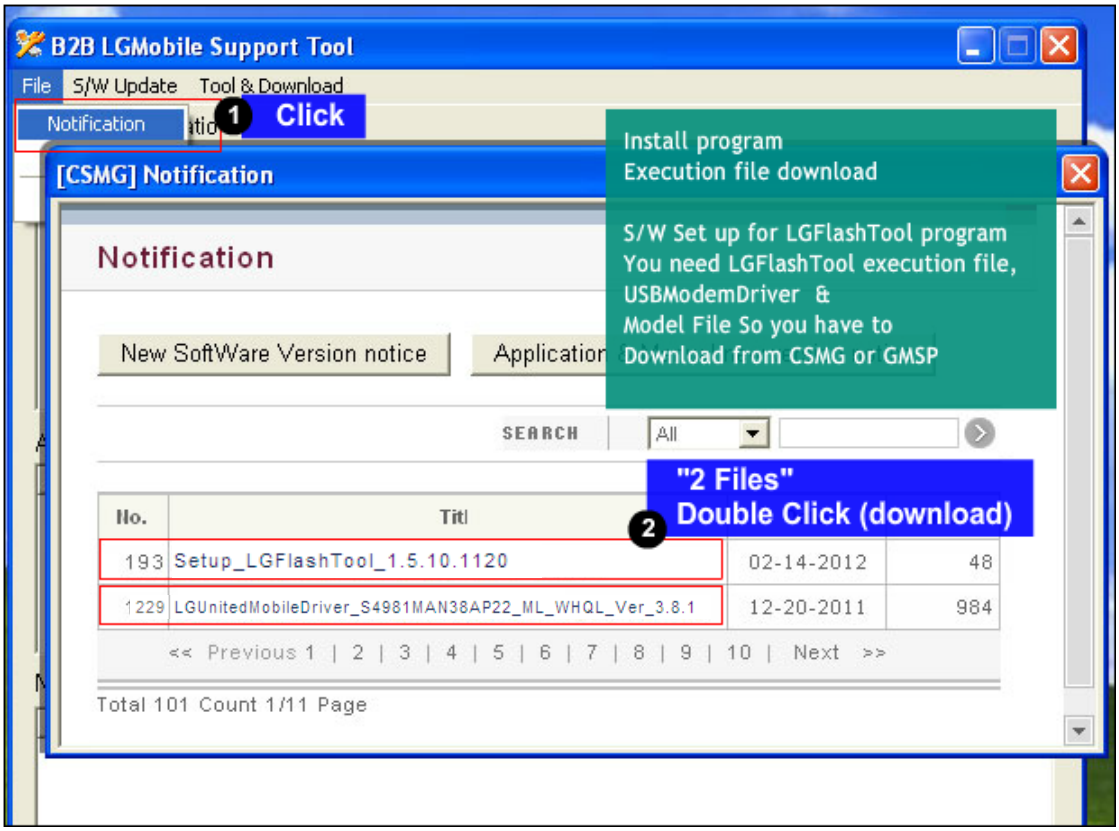

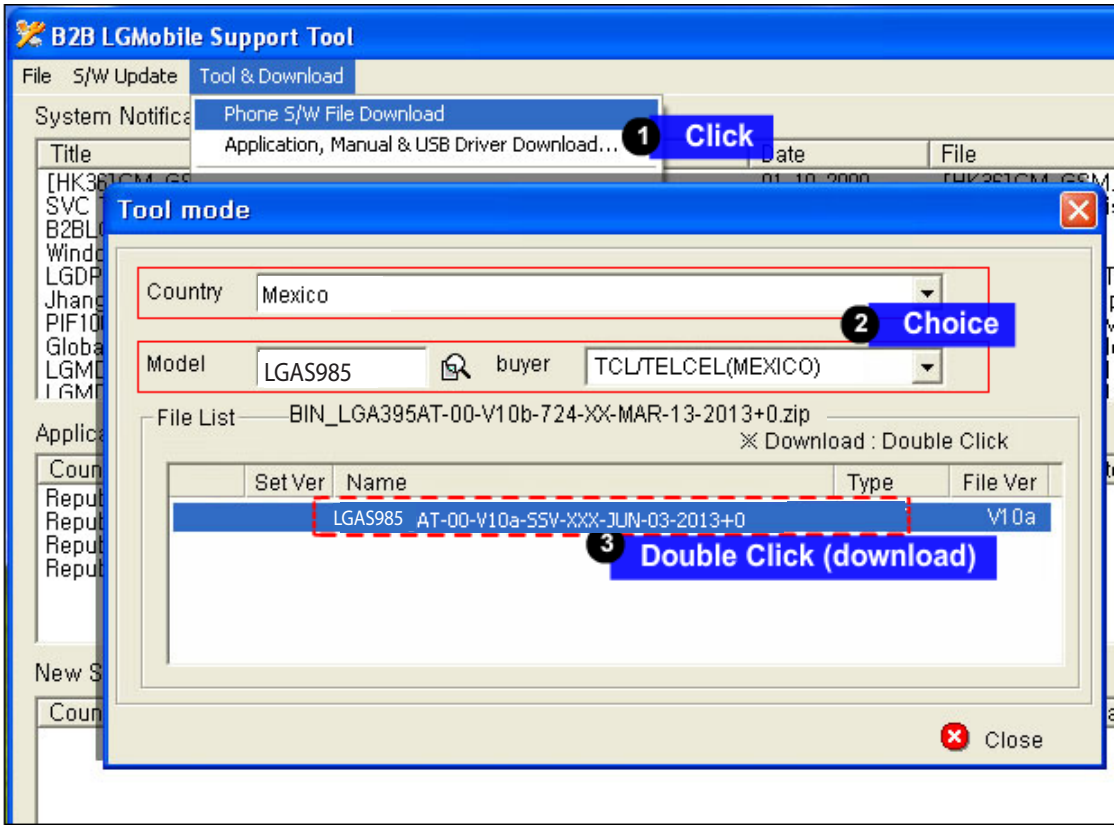

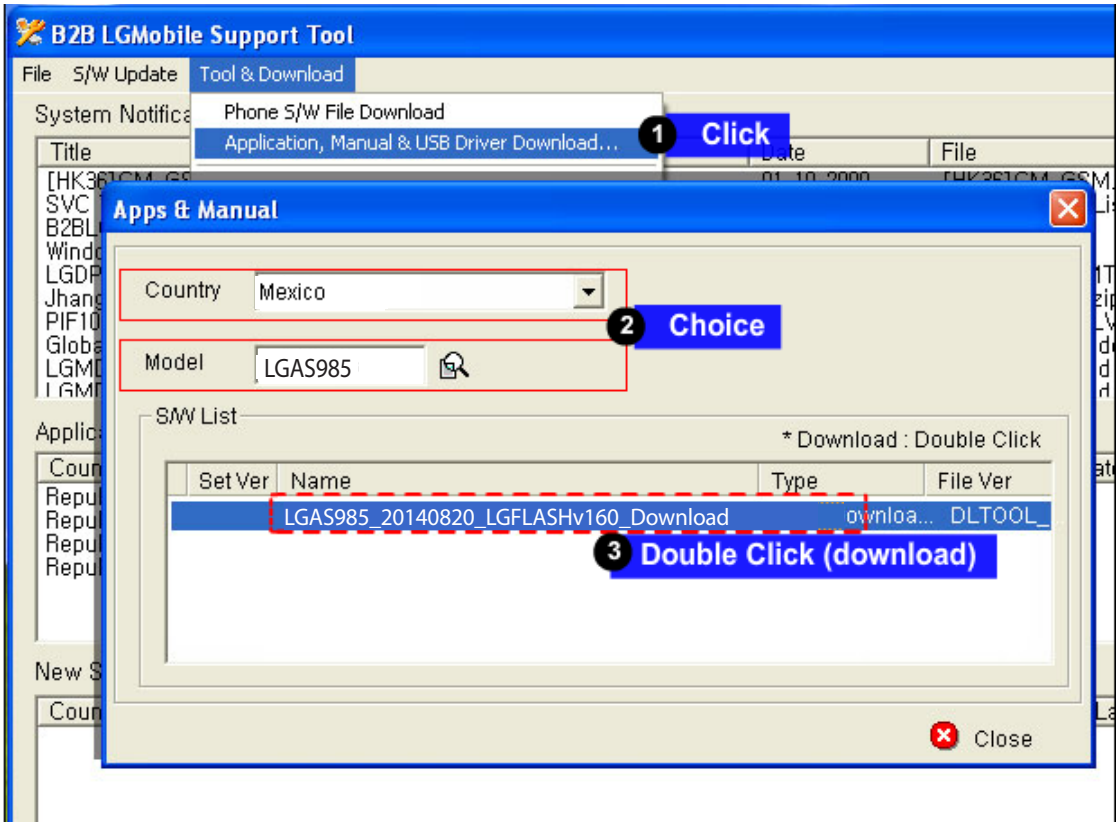

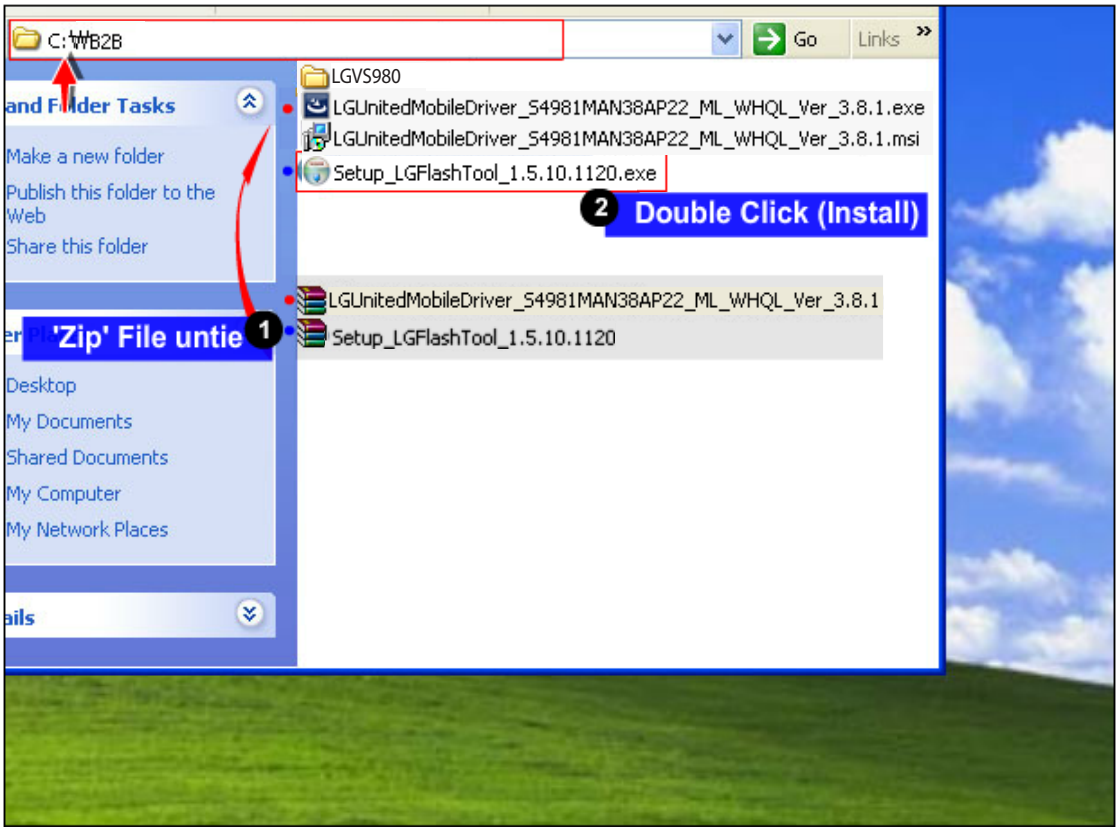

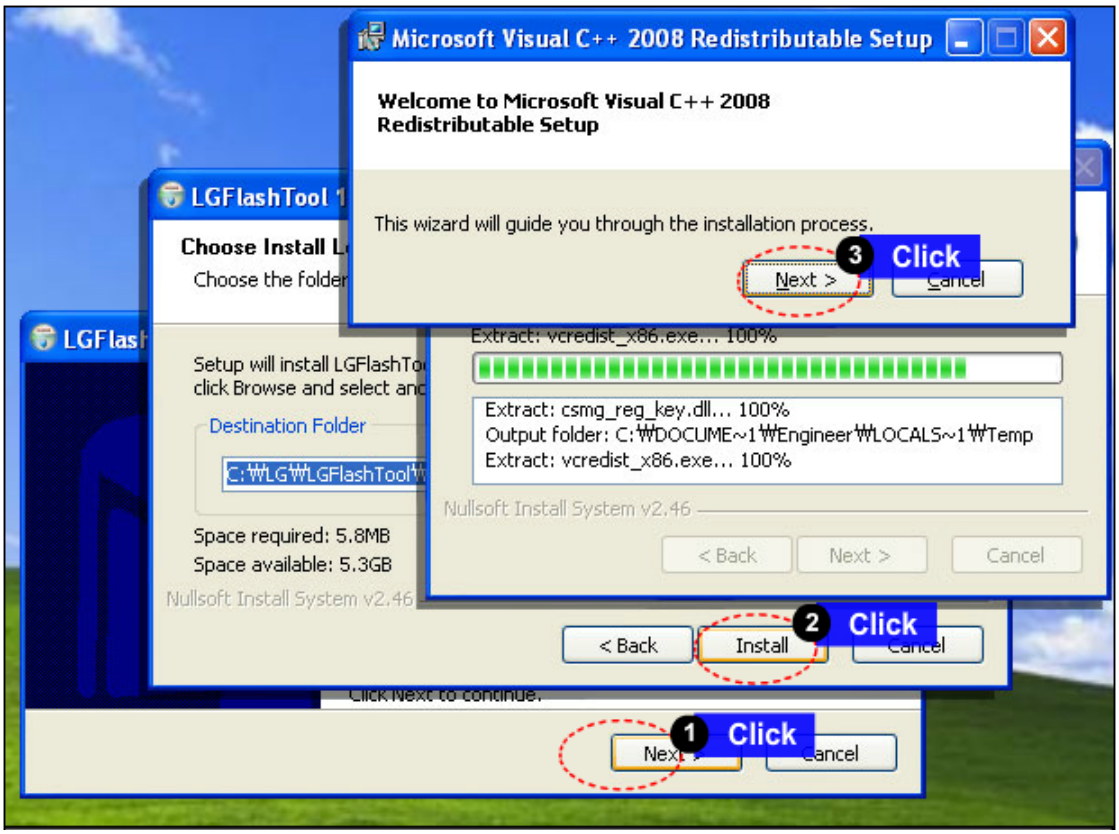

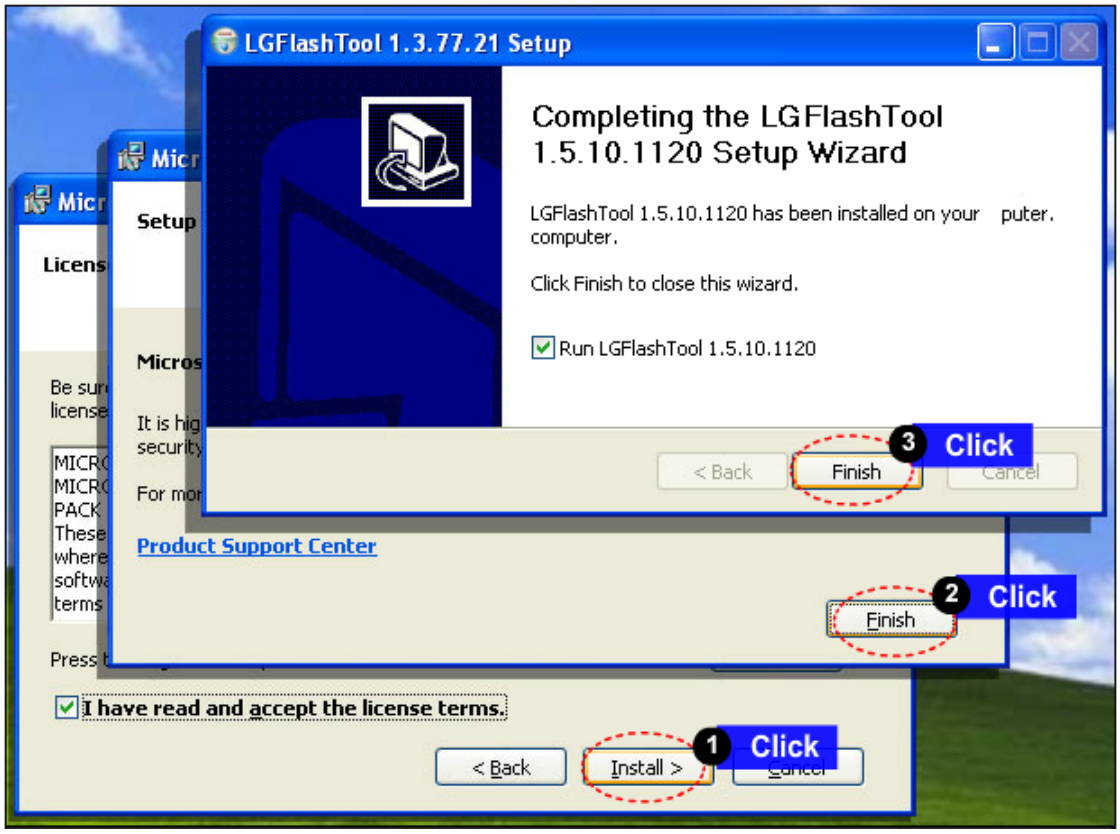

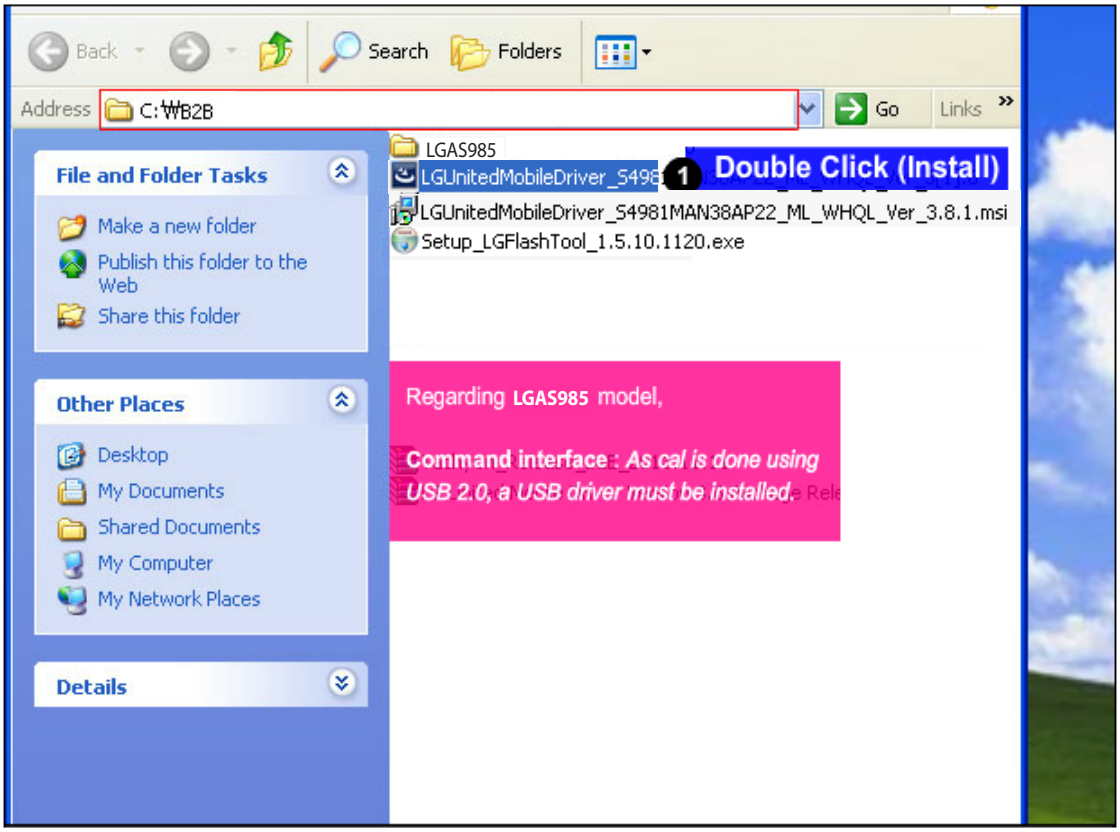

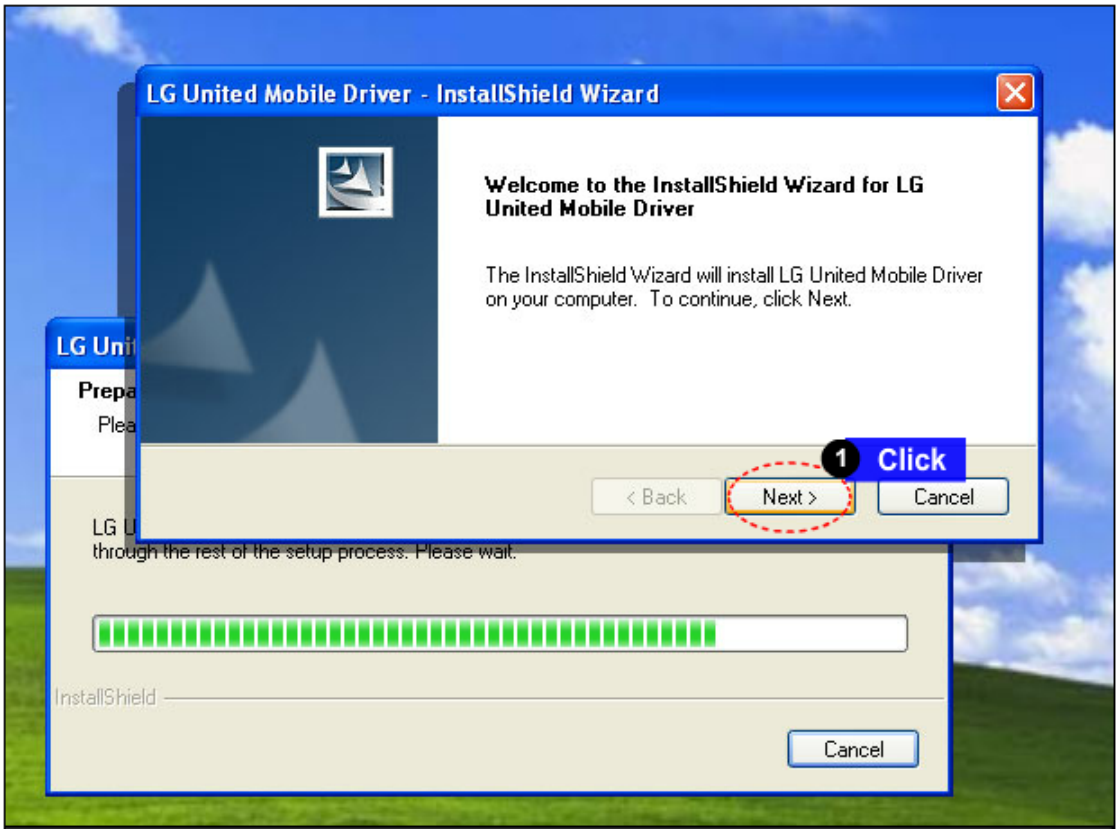

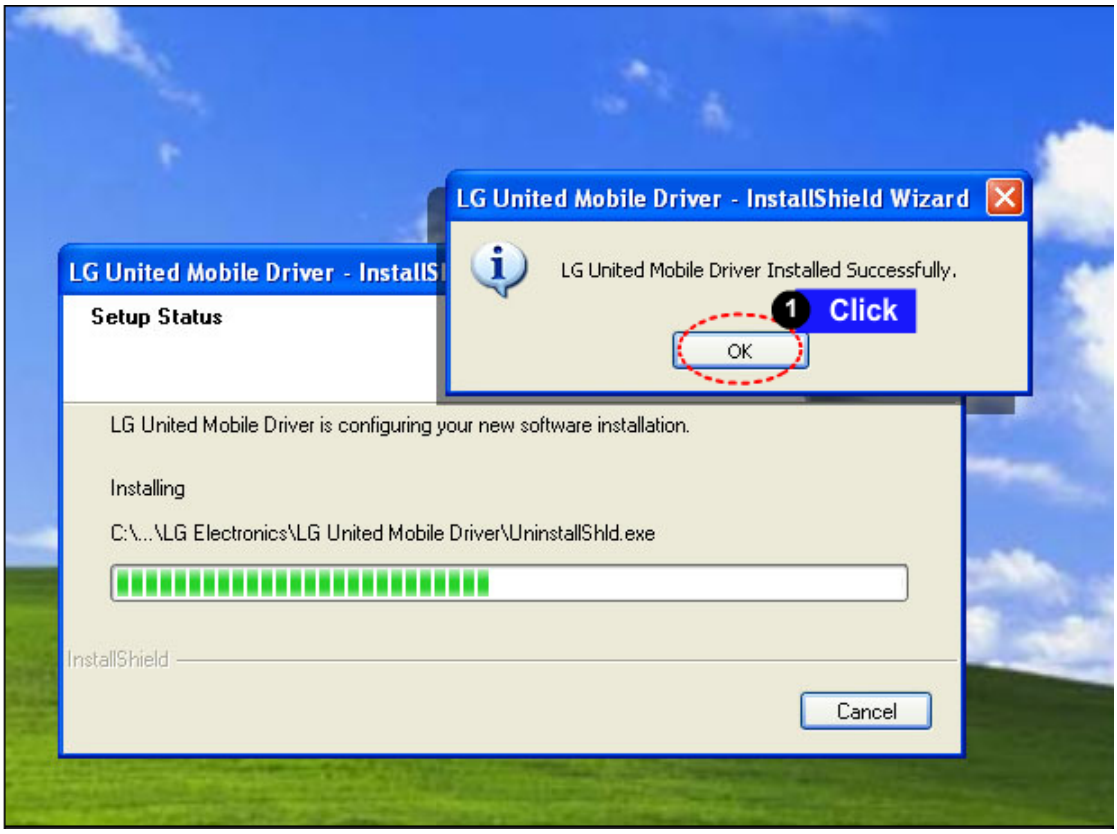

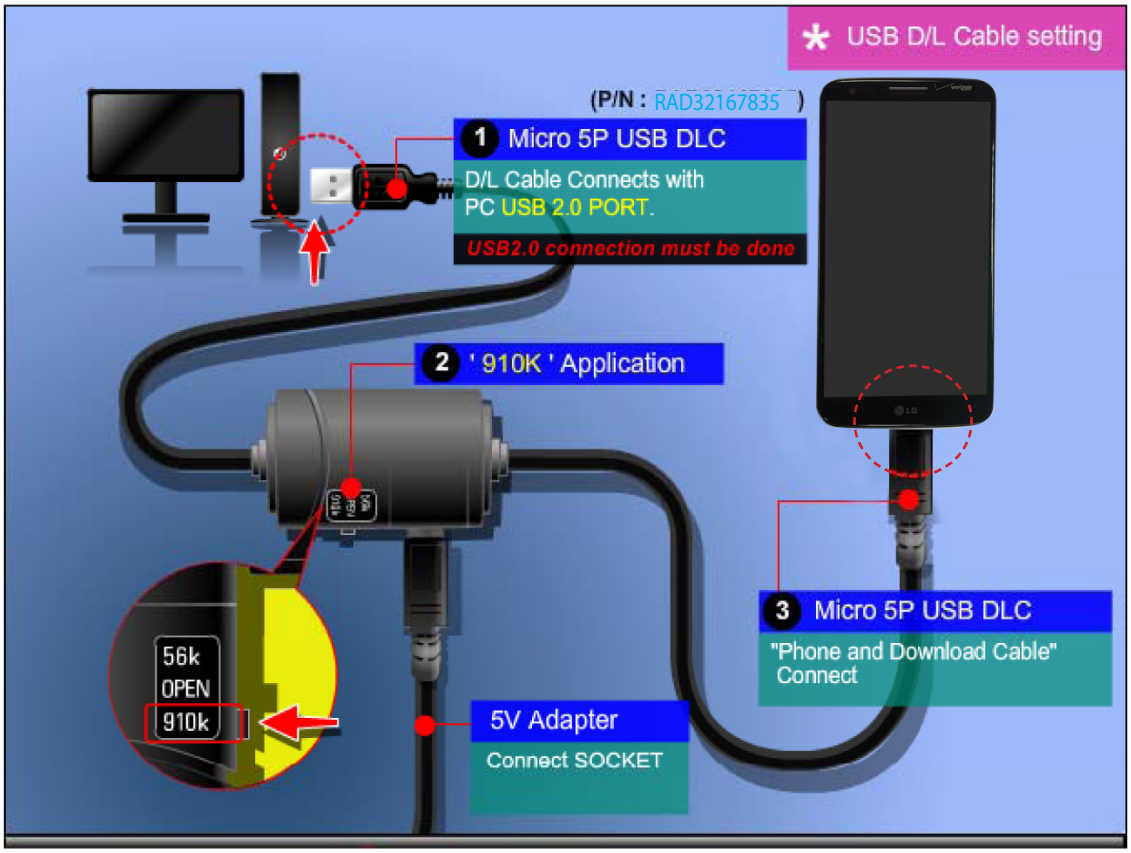

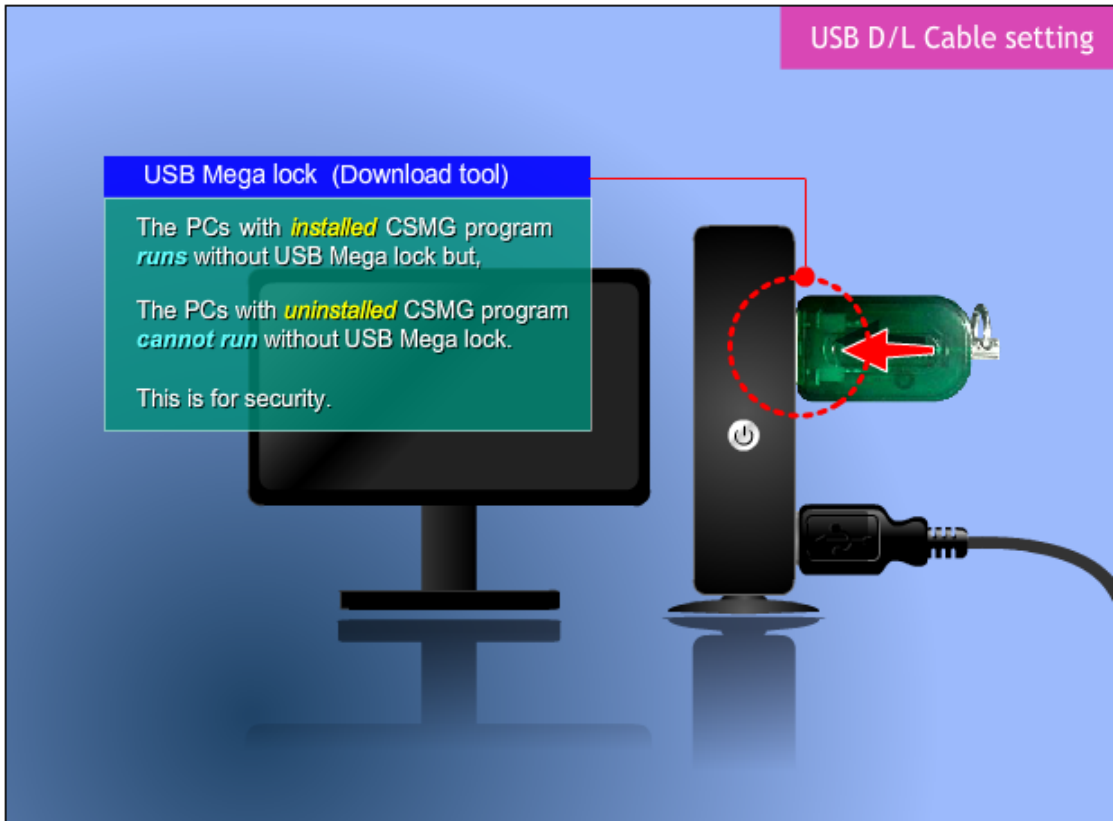

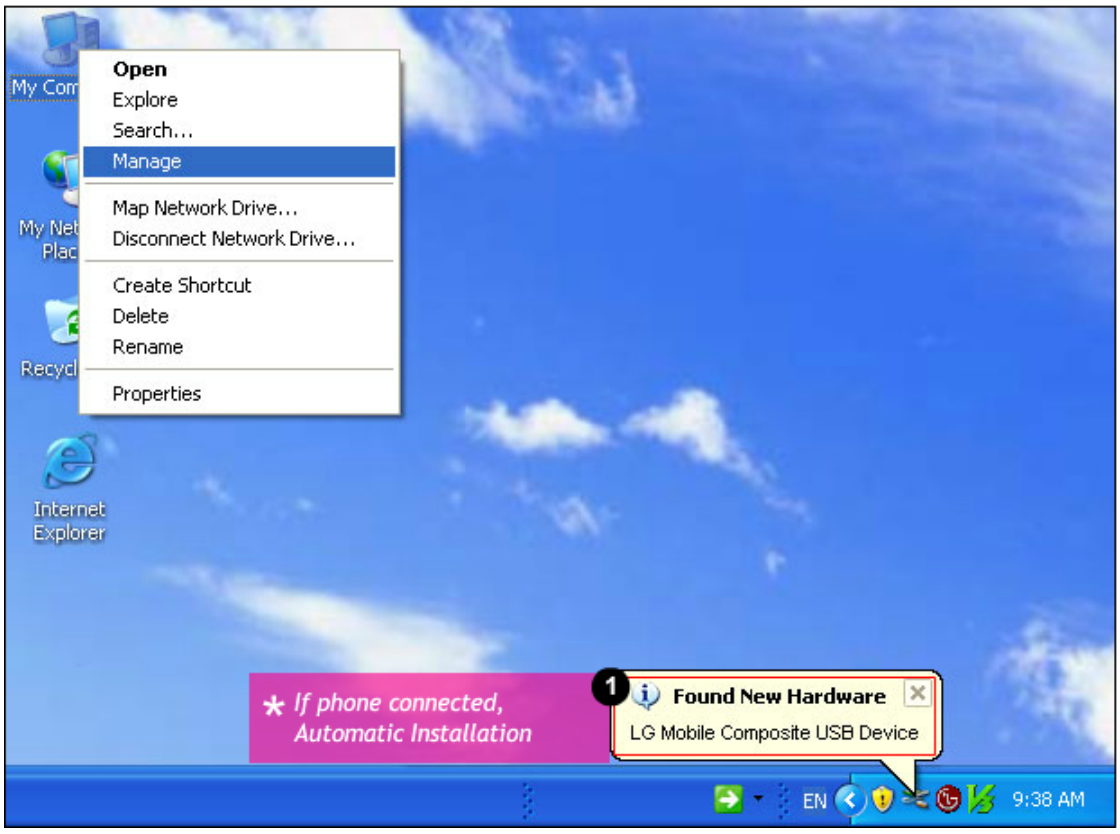

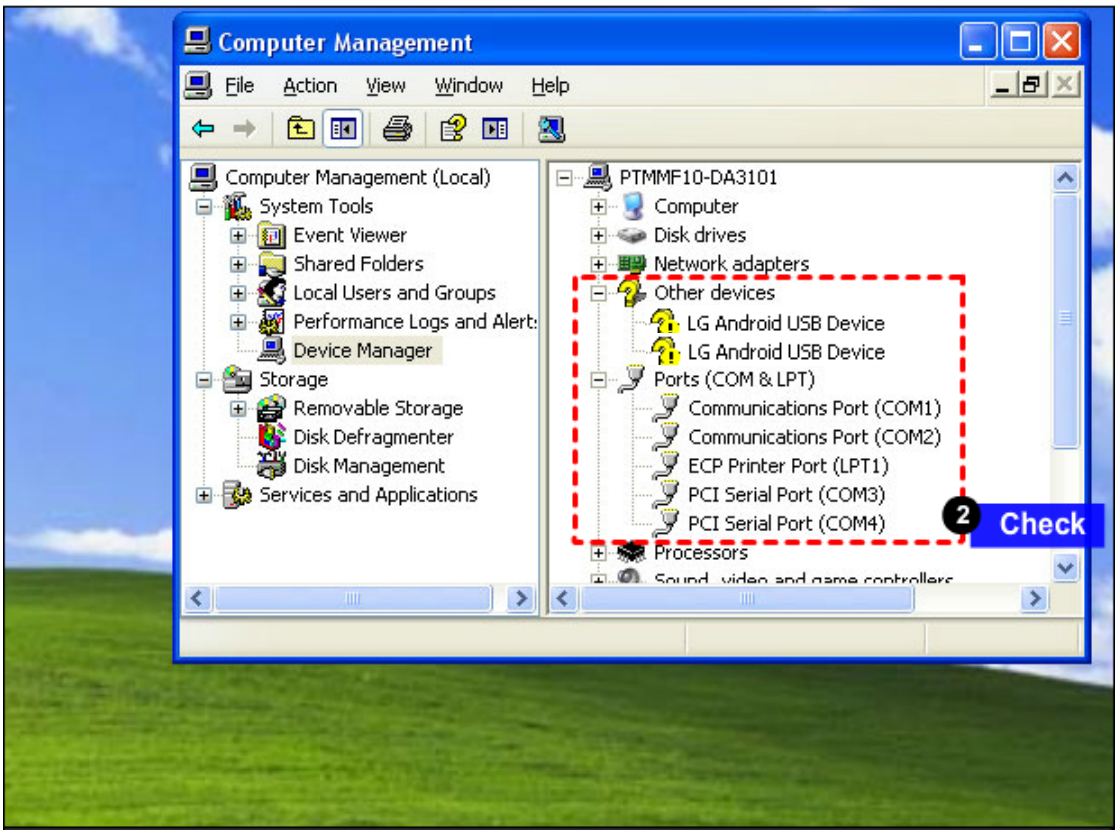

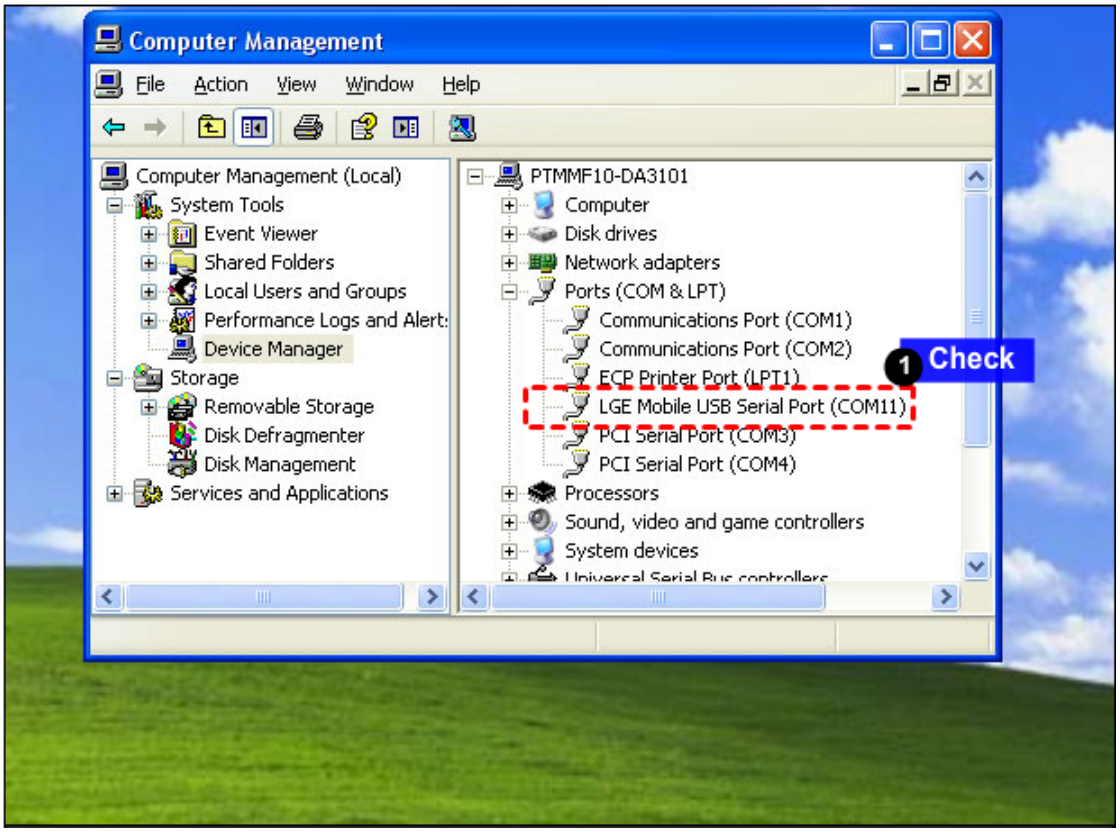

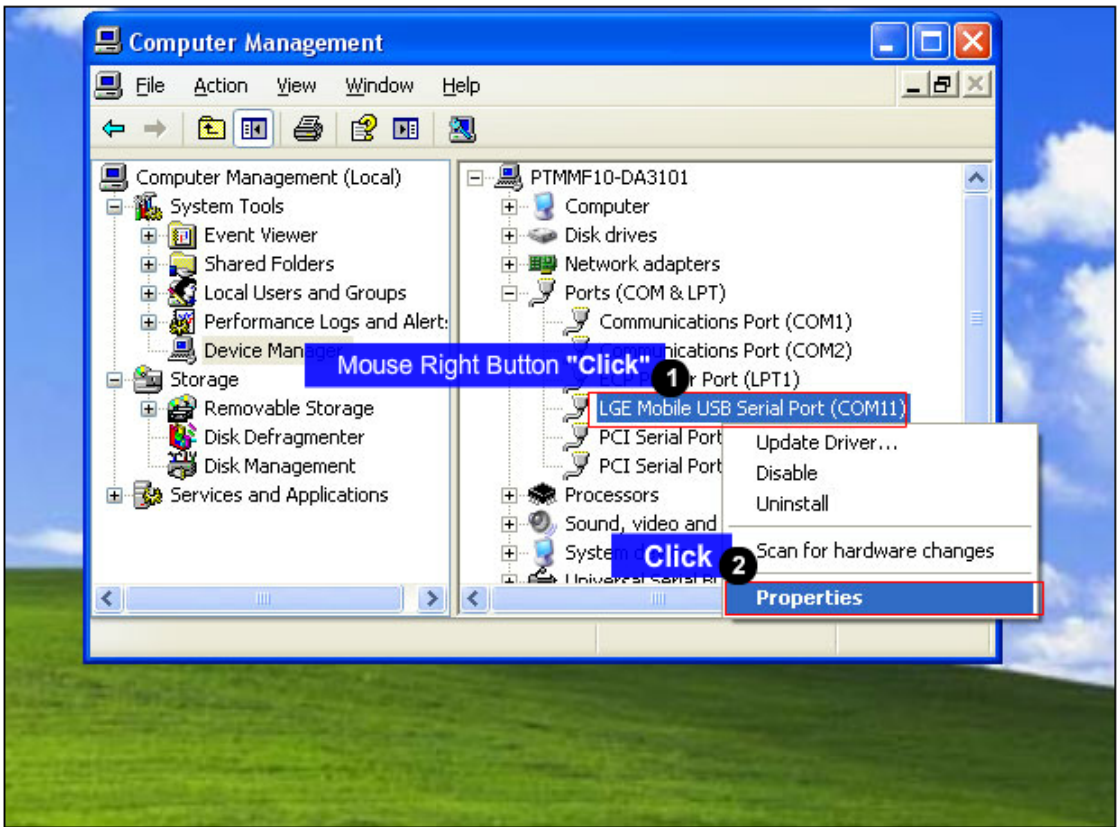

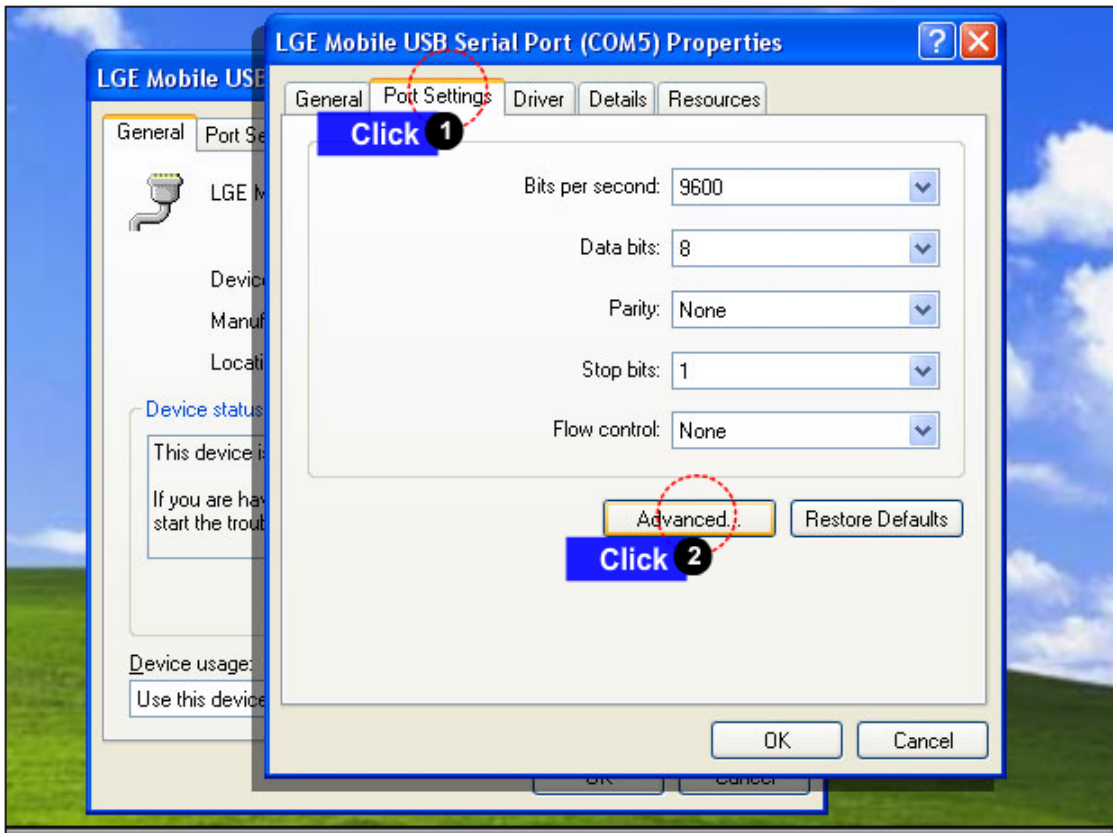

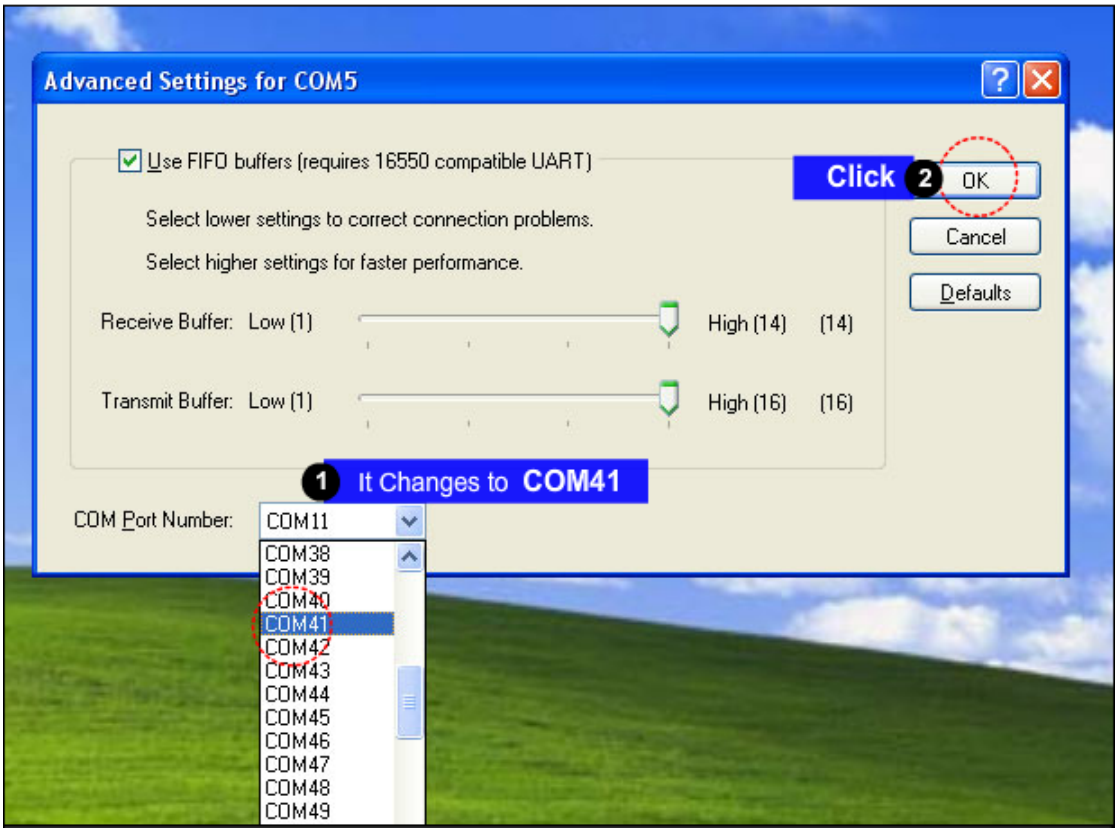

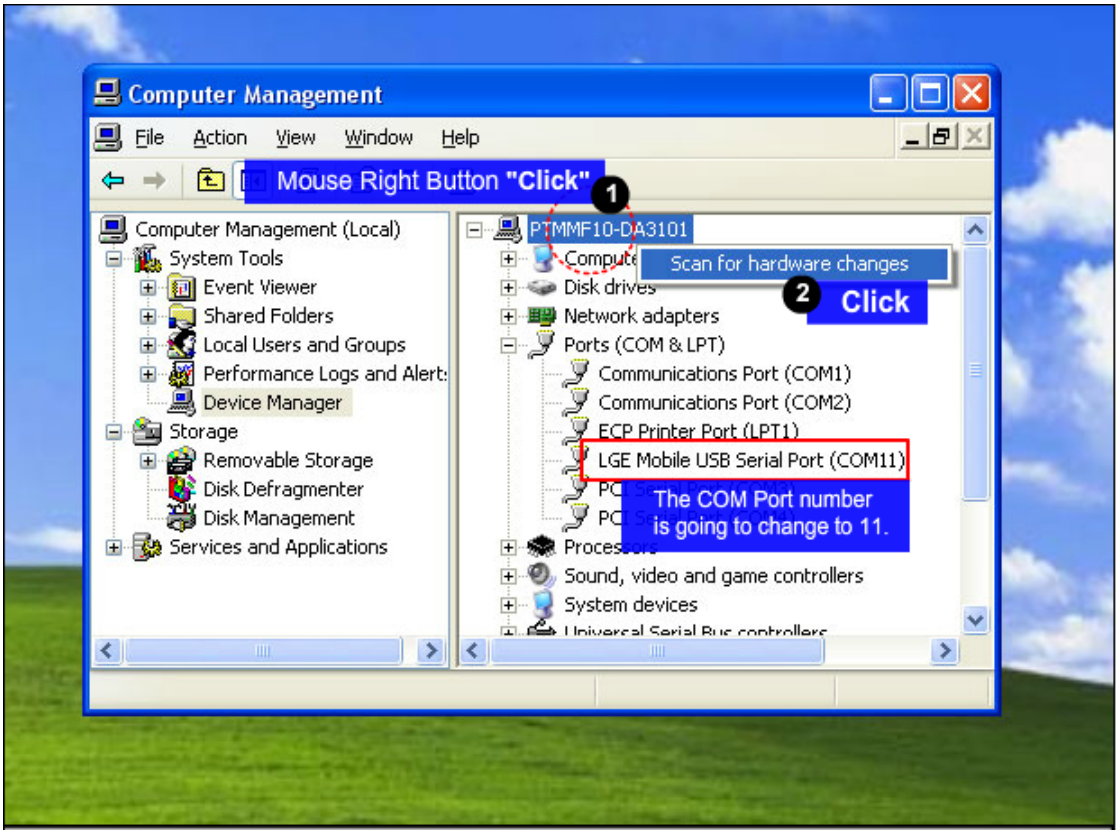

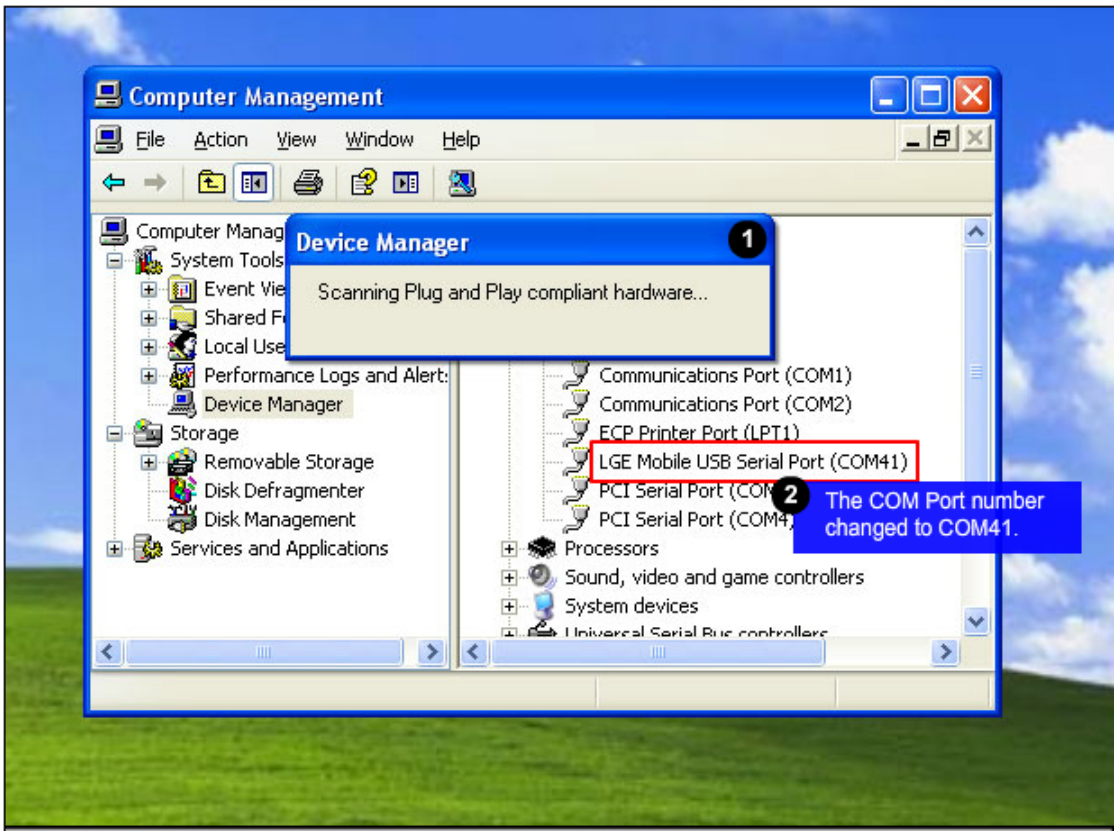

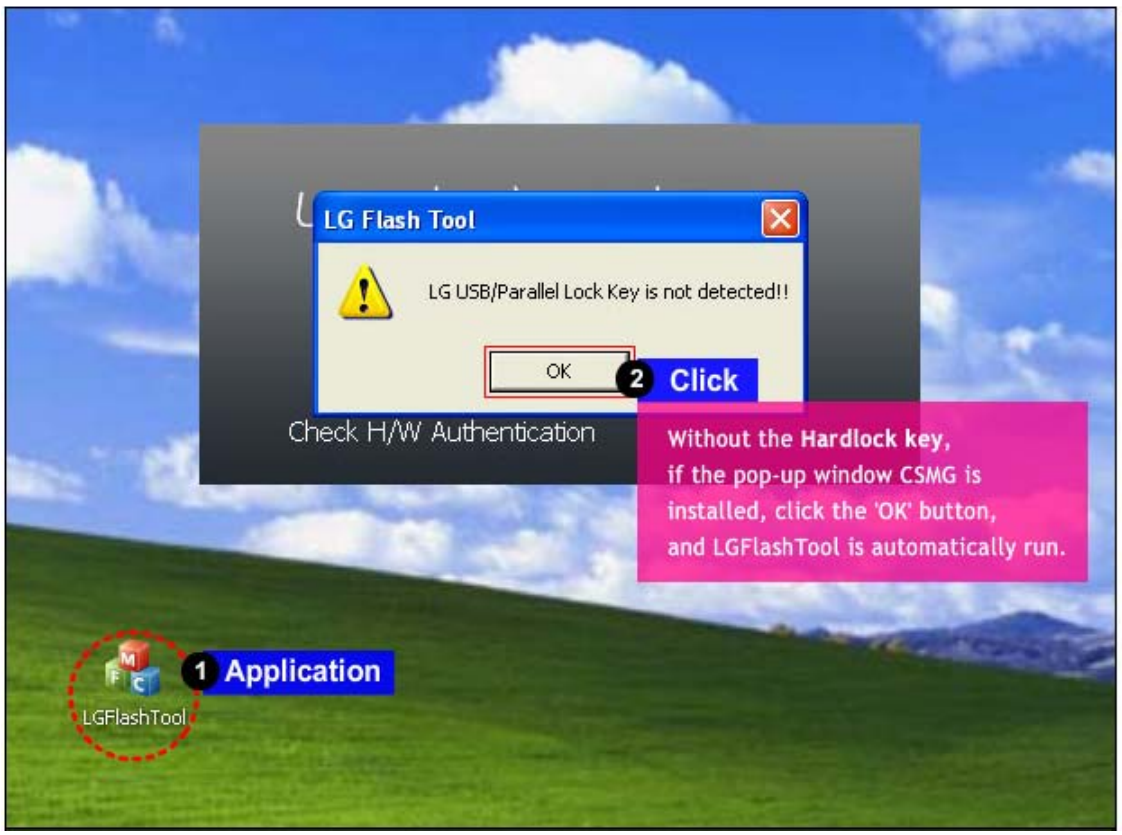

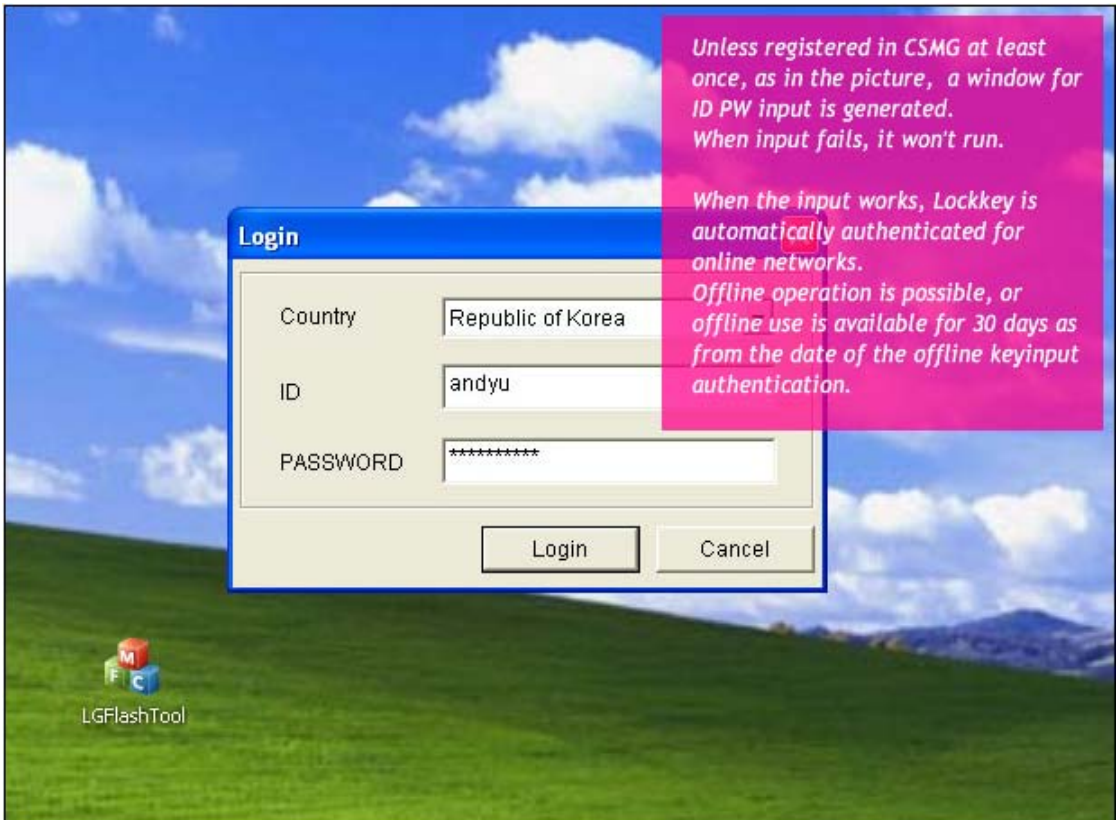

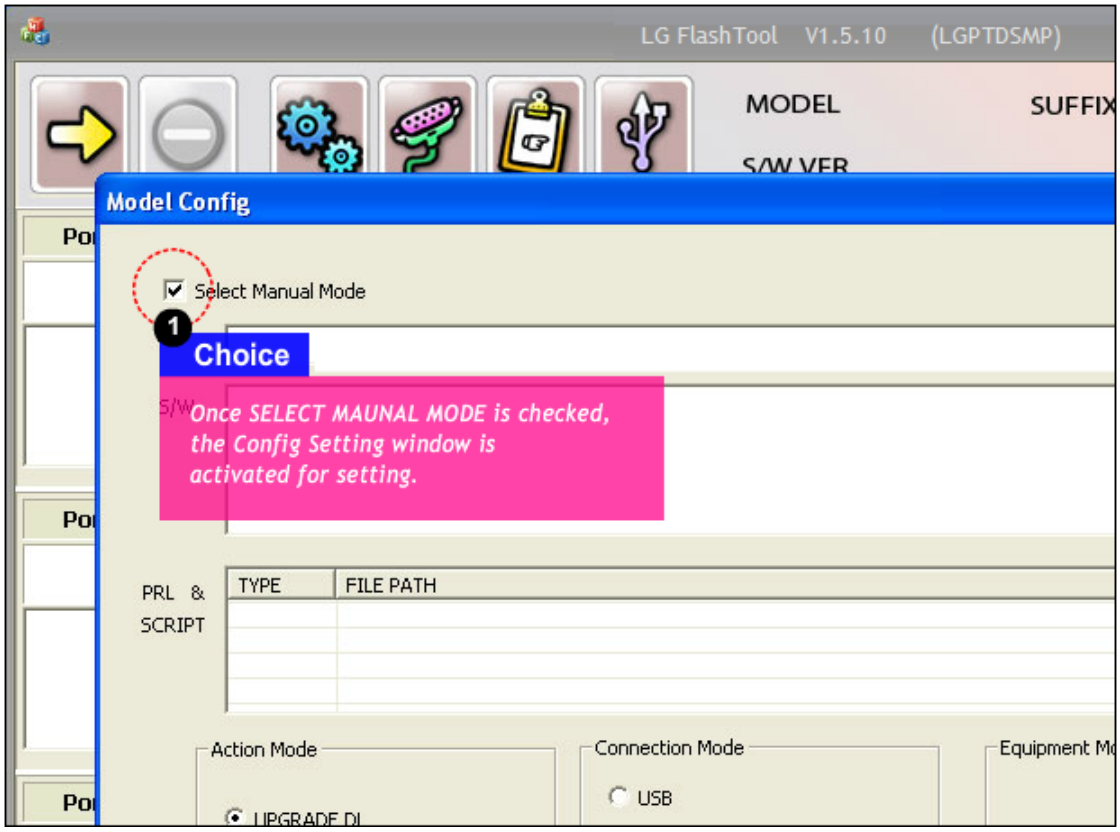

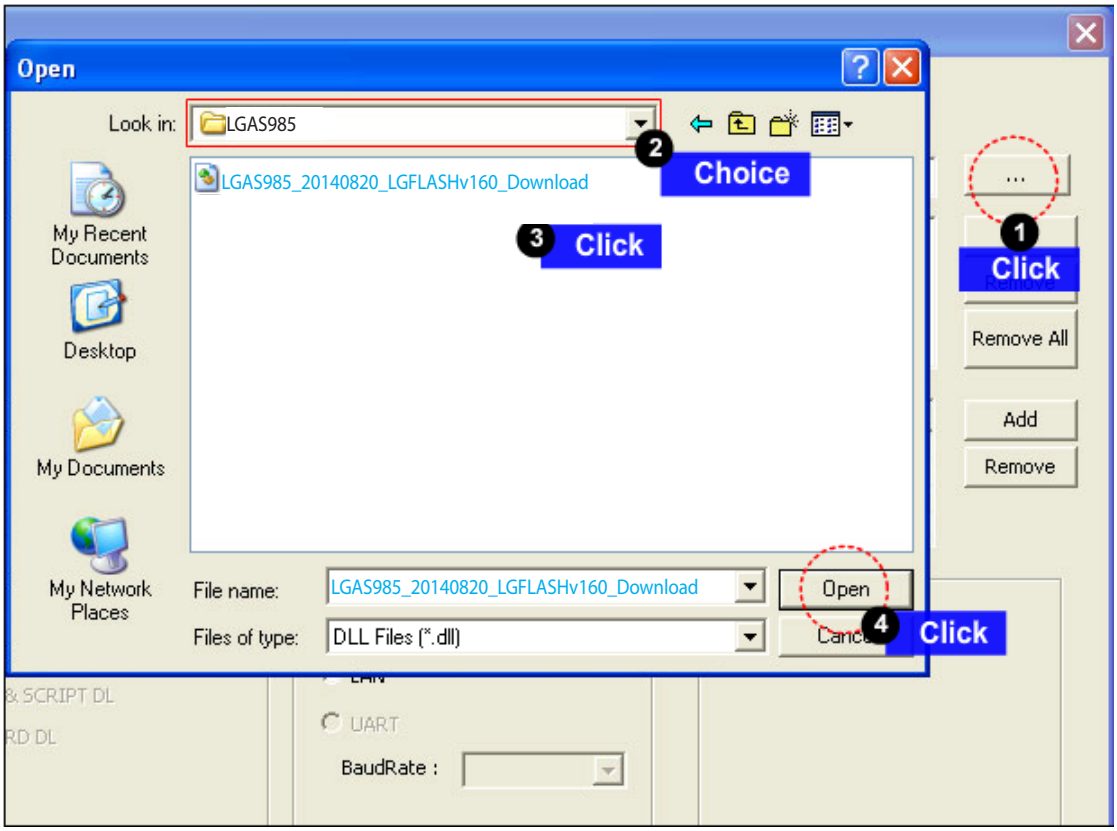

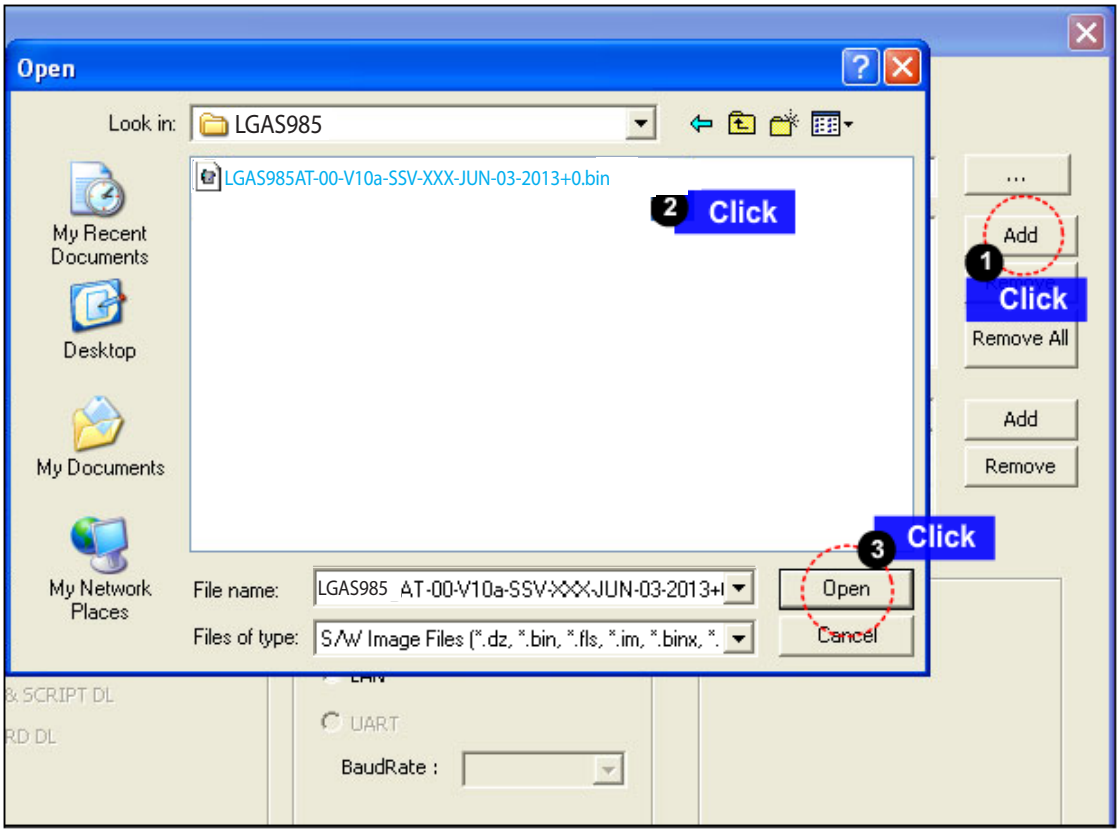

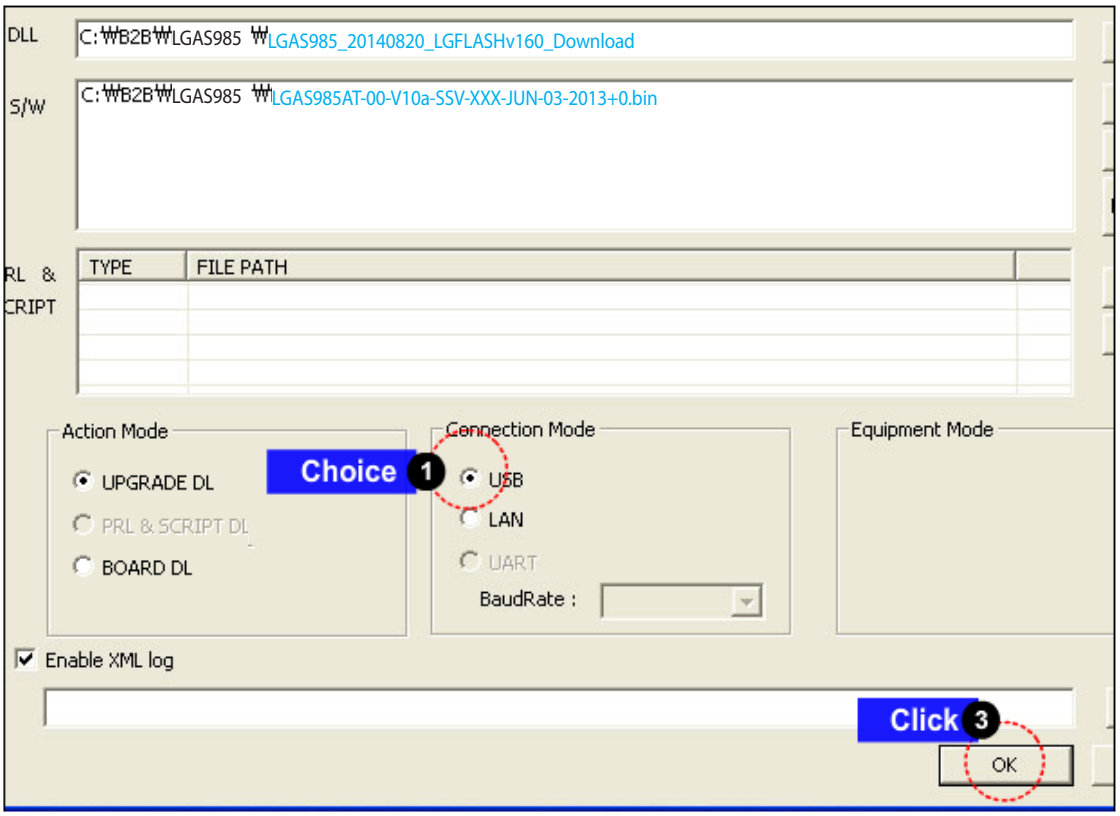

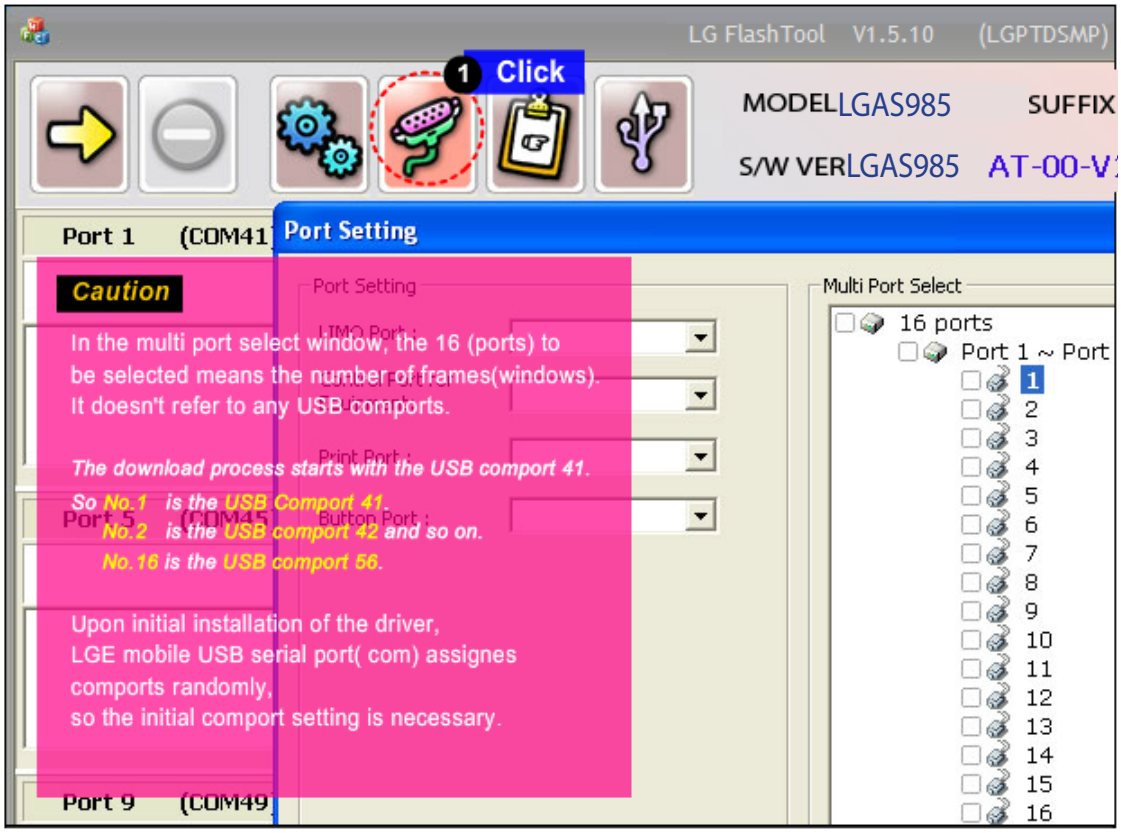

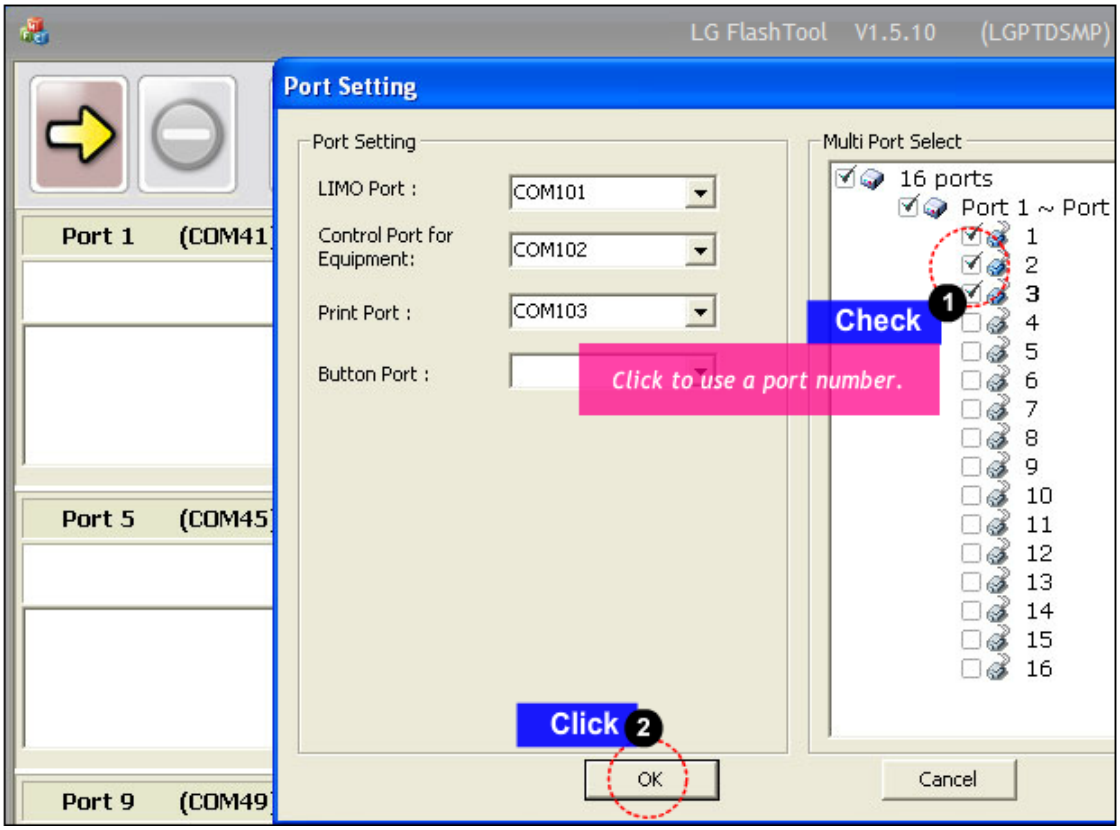

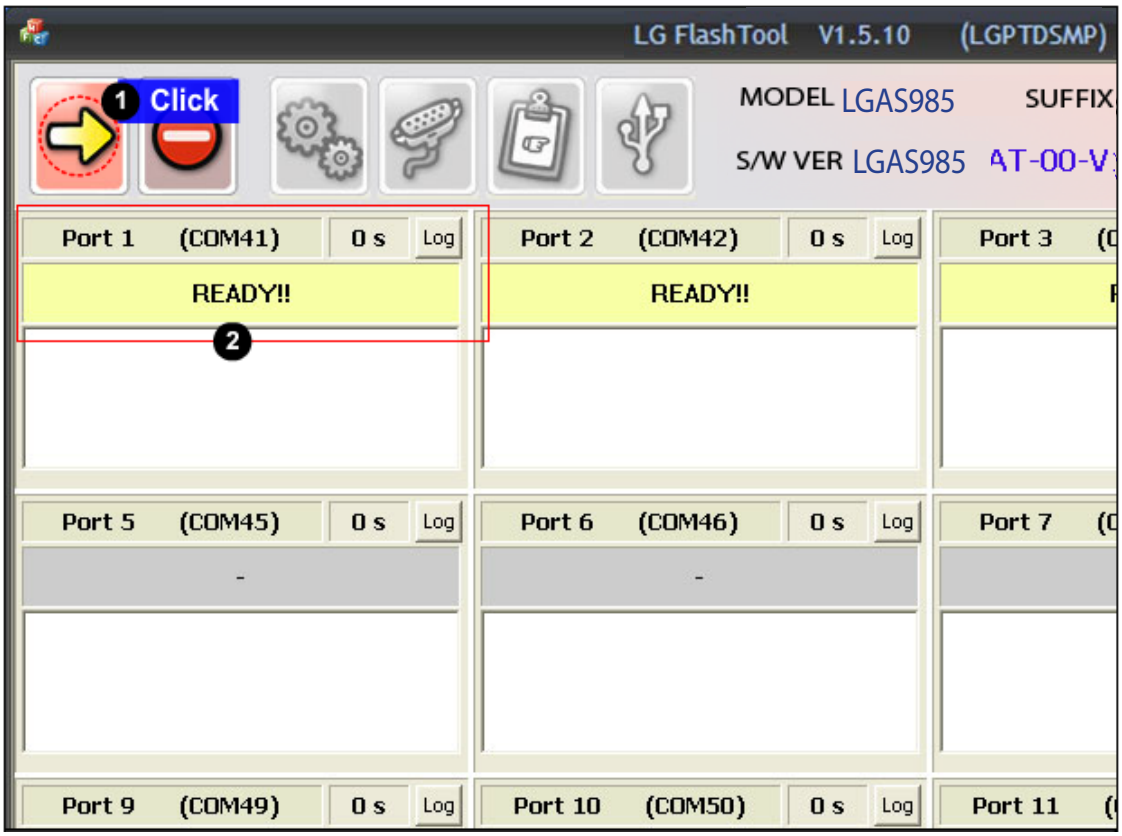

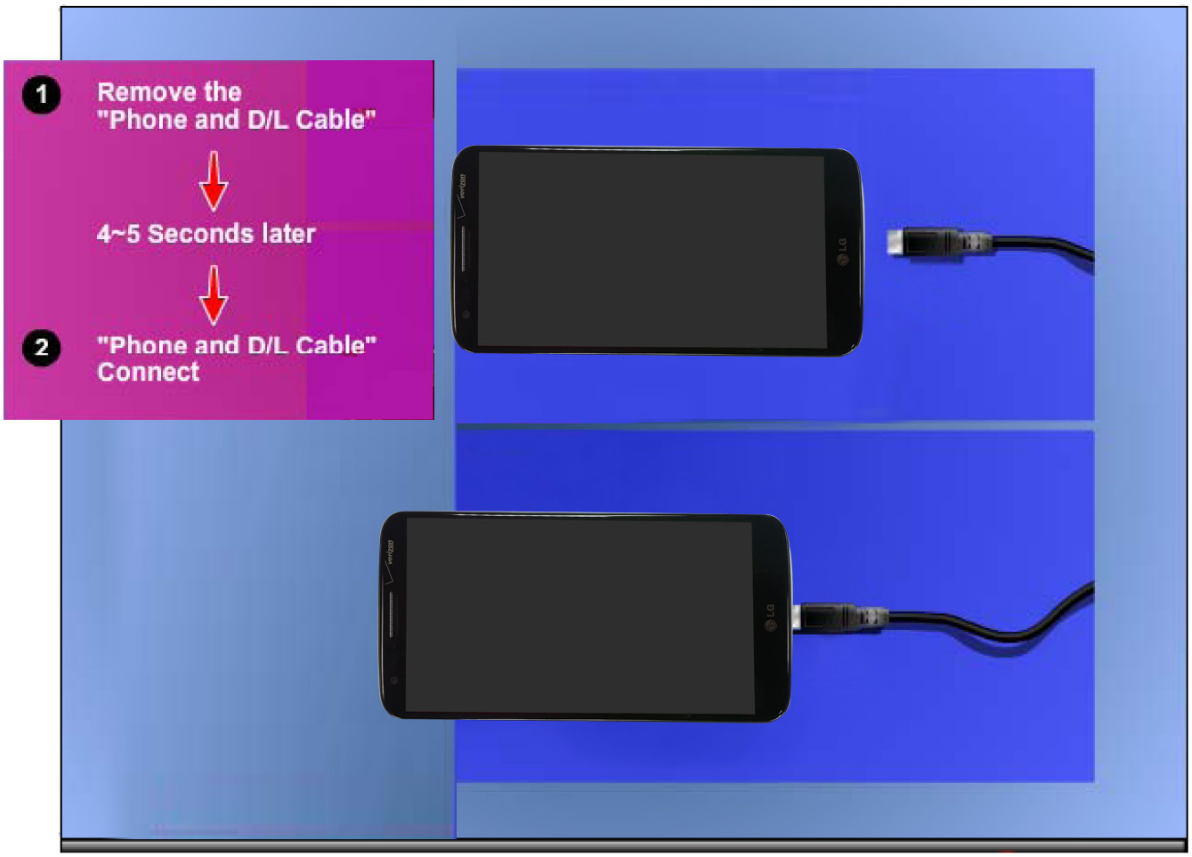

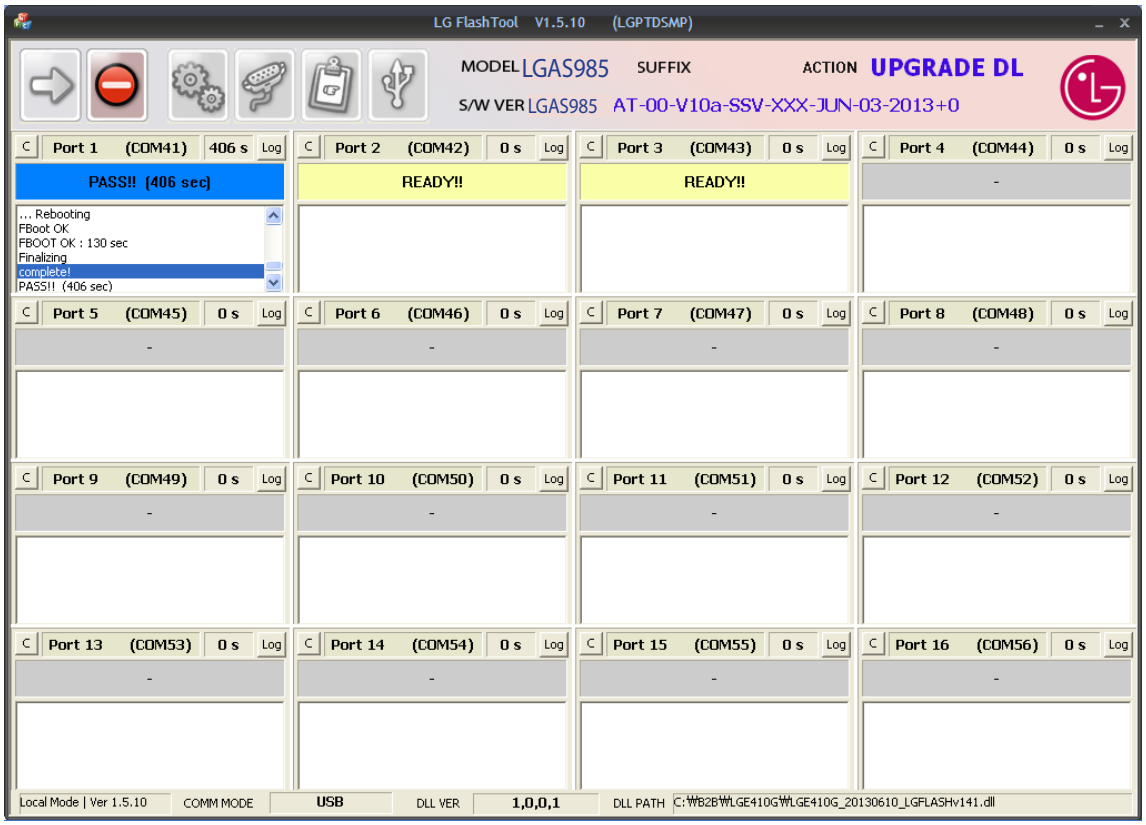

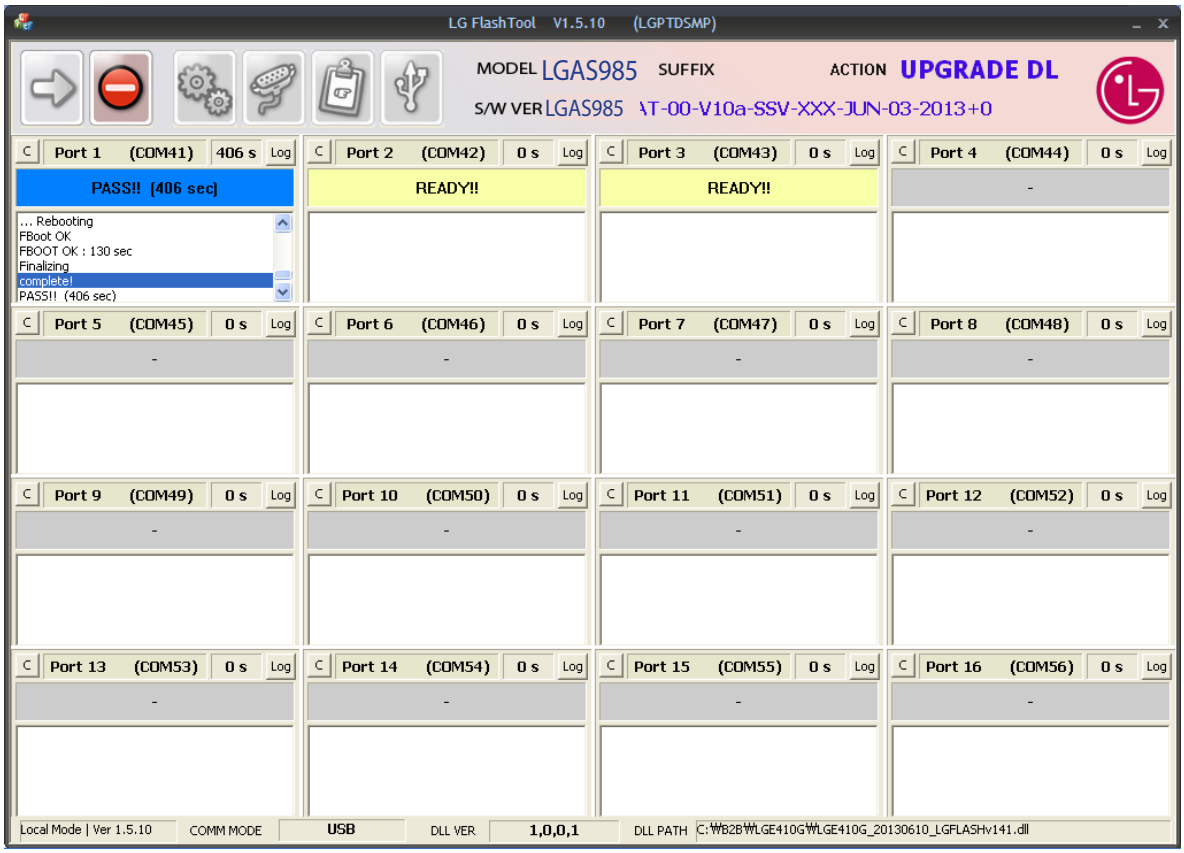

5. BLOCK DIAGRAM

[AS985] Total Block Diagram

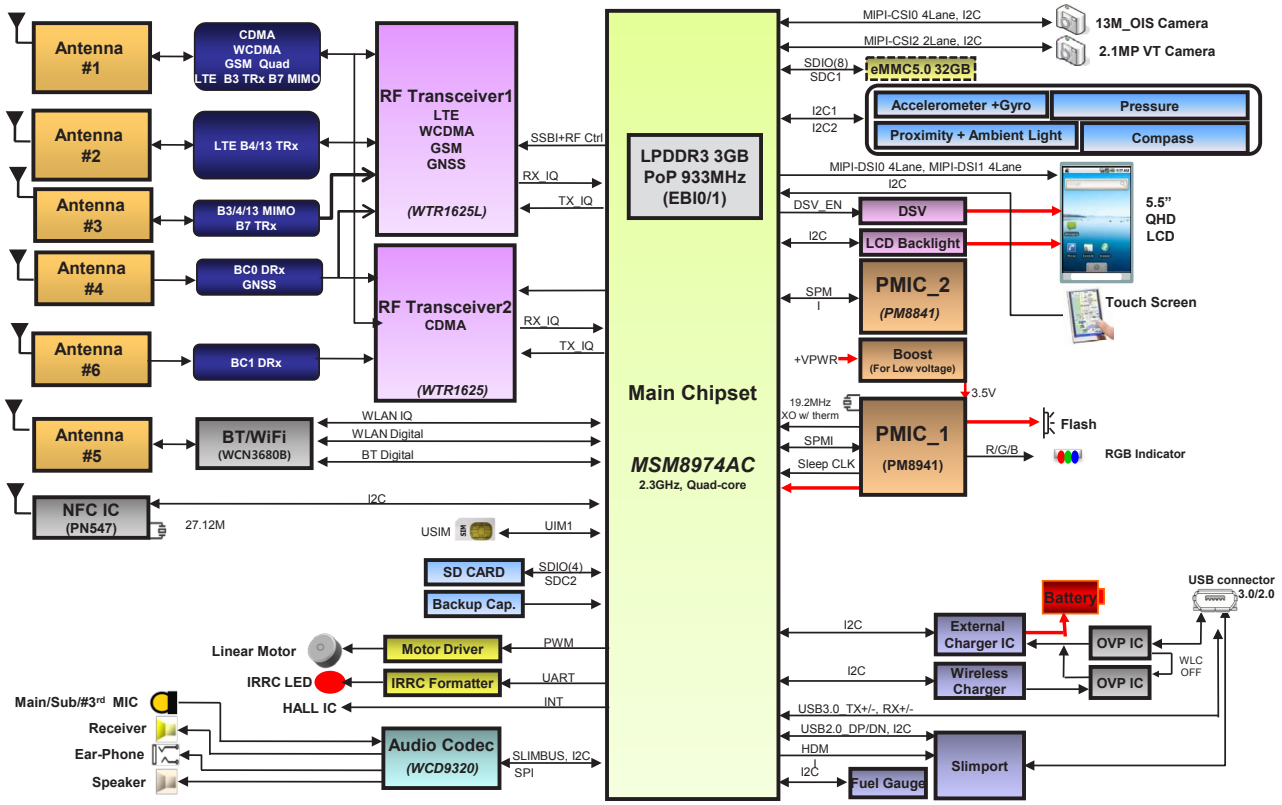

[AS985] RF-Front Block-diagram

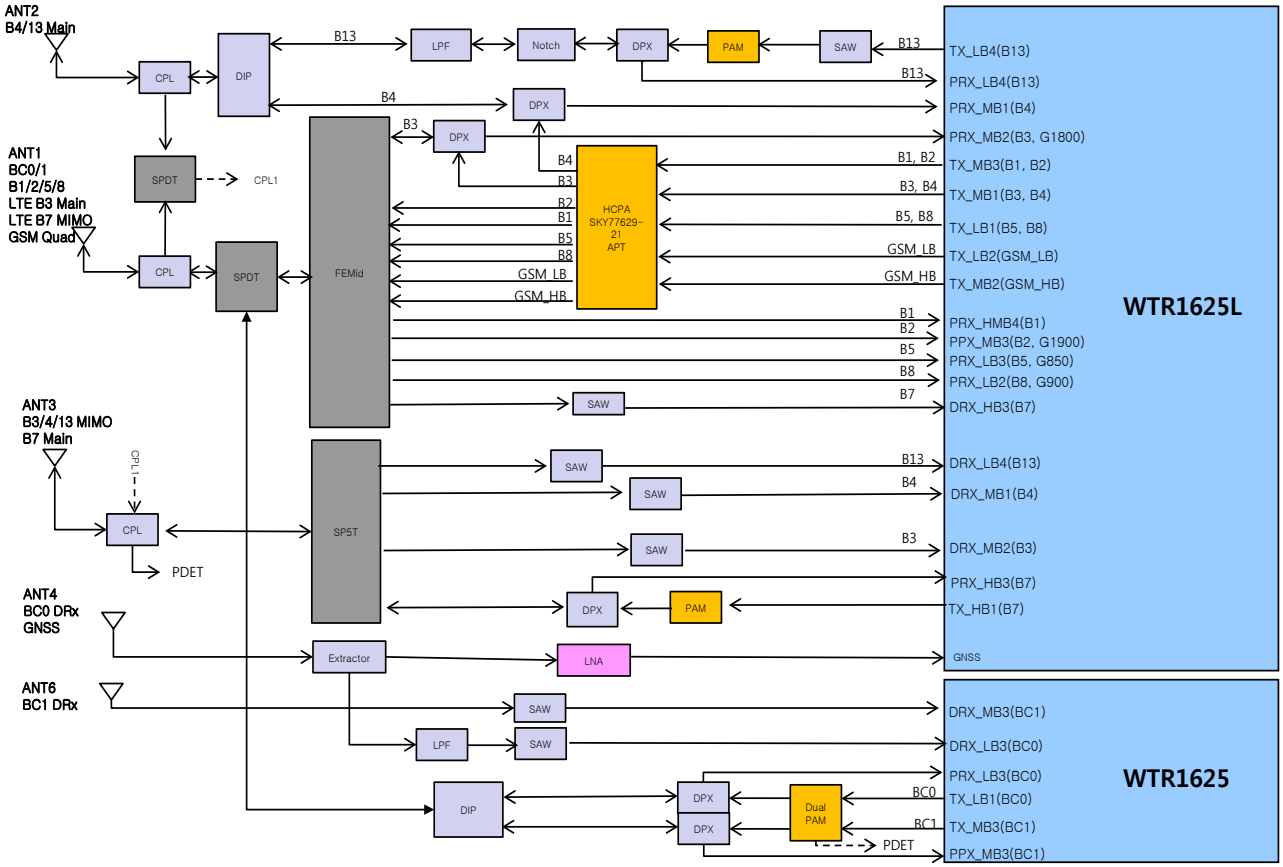

[AS985] PM8941 Output Power Management

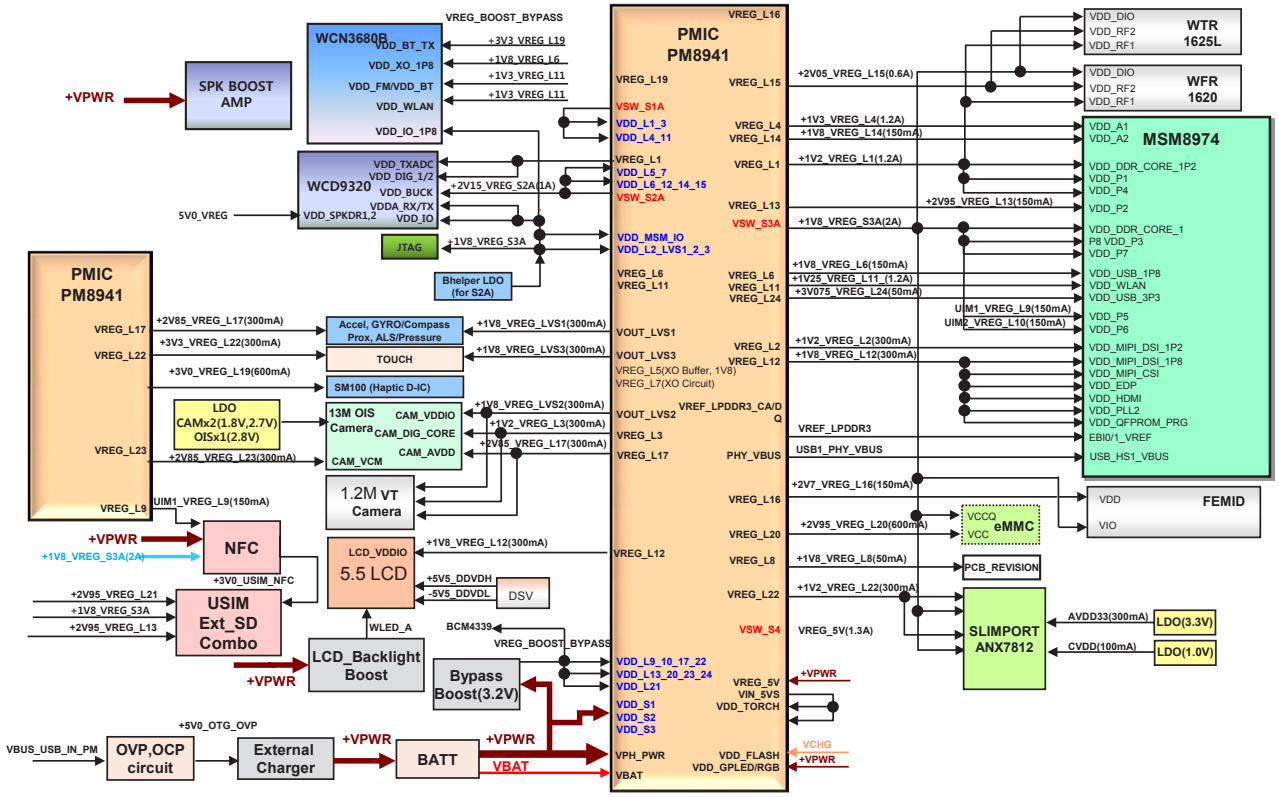

[AS985] PM8841 SMPS / PM8941 Input Power Management

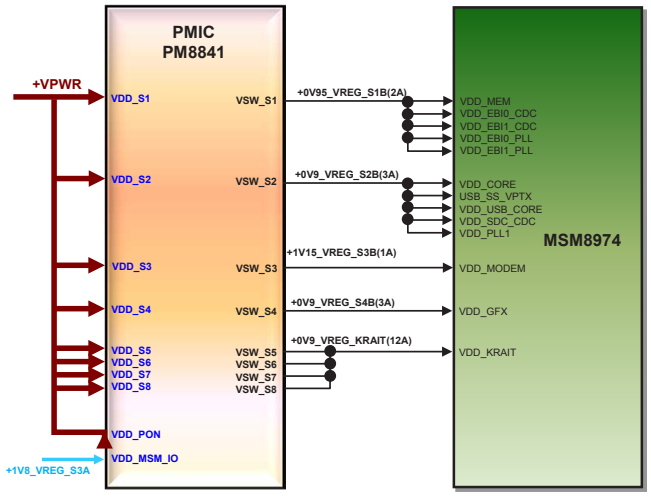

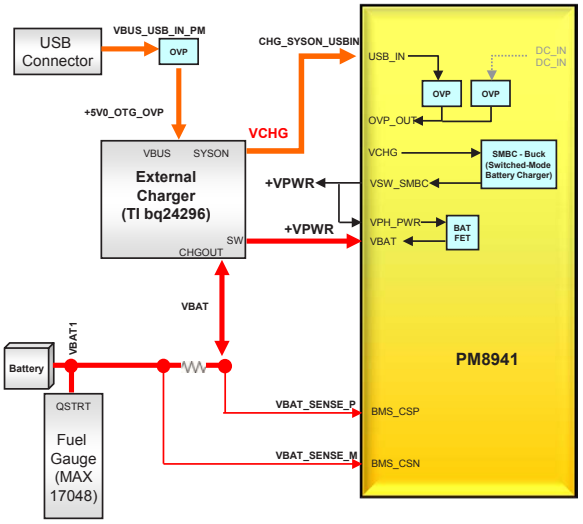

[AS985] Wireless charger

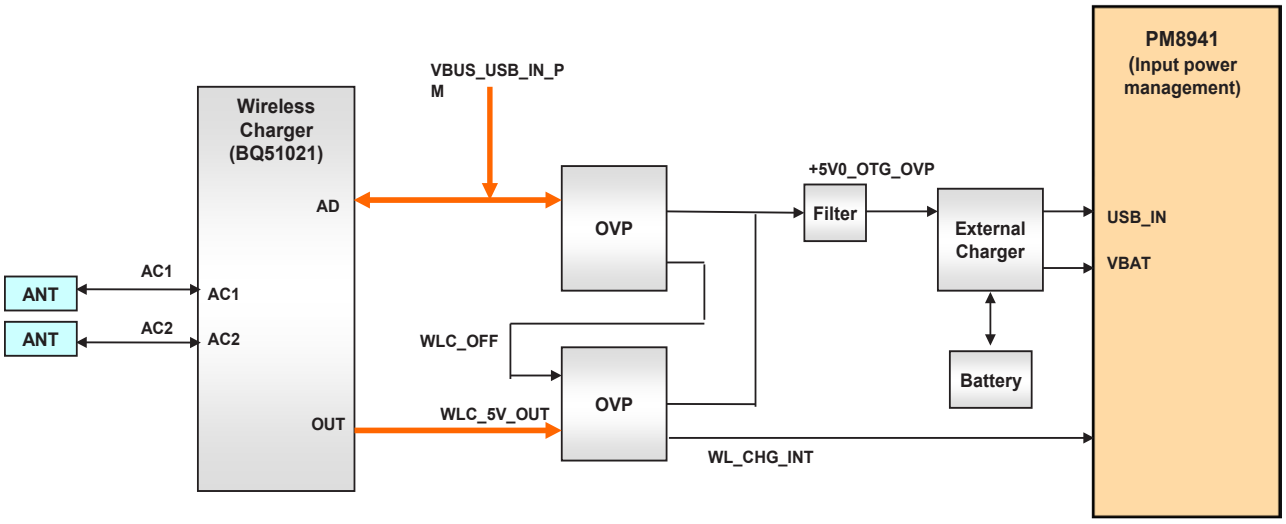

[AS985] Memory I/F

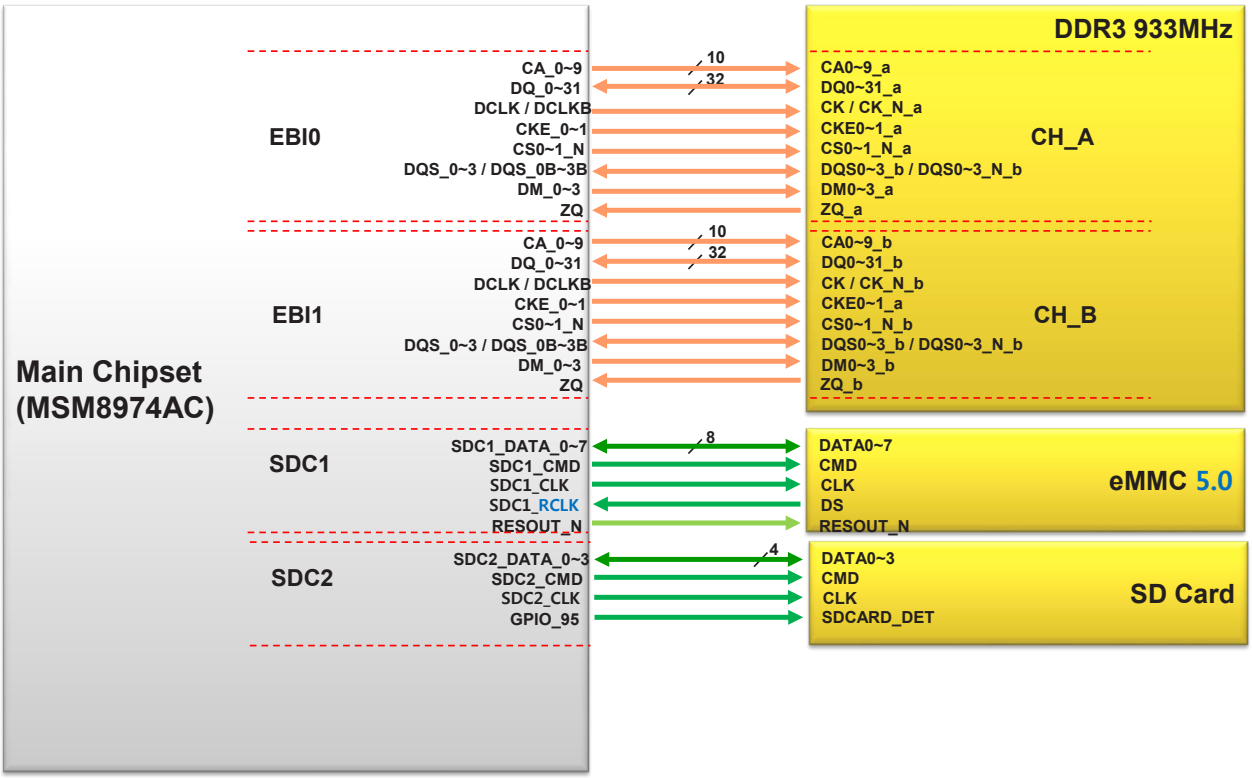

[AS985] Main Display I/F

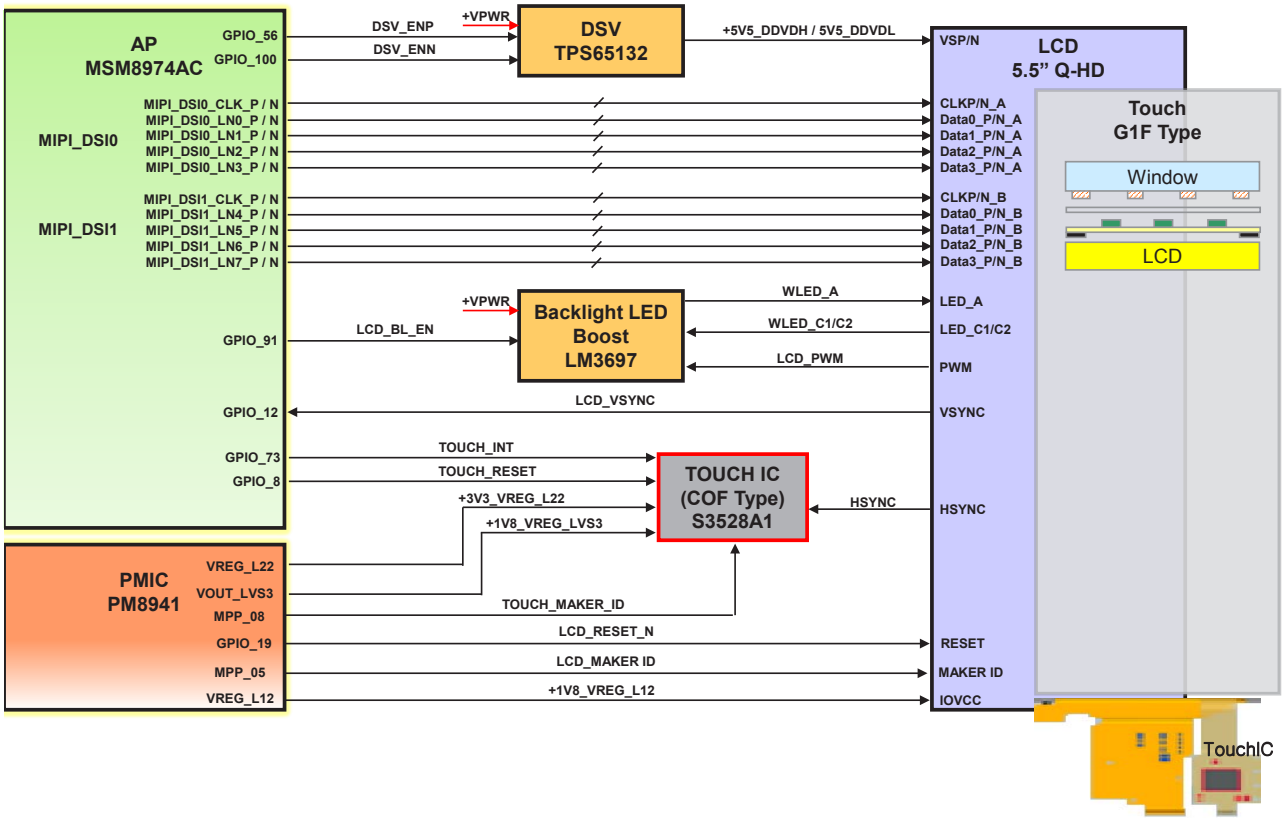

[AS985] 13M OIS Camera, 2.1M VT Camera

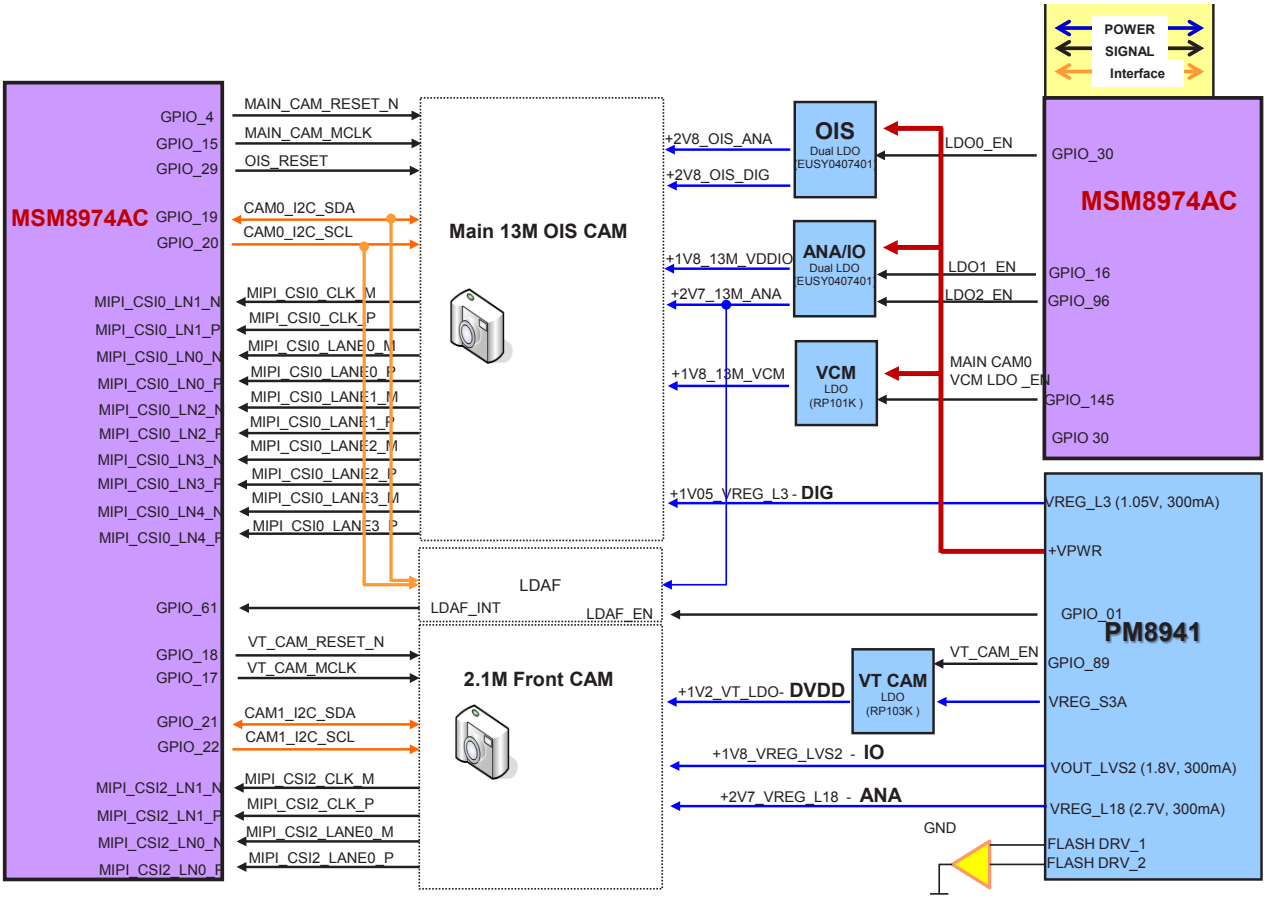

[AS985] Sensor

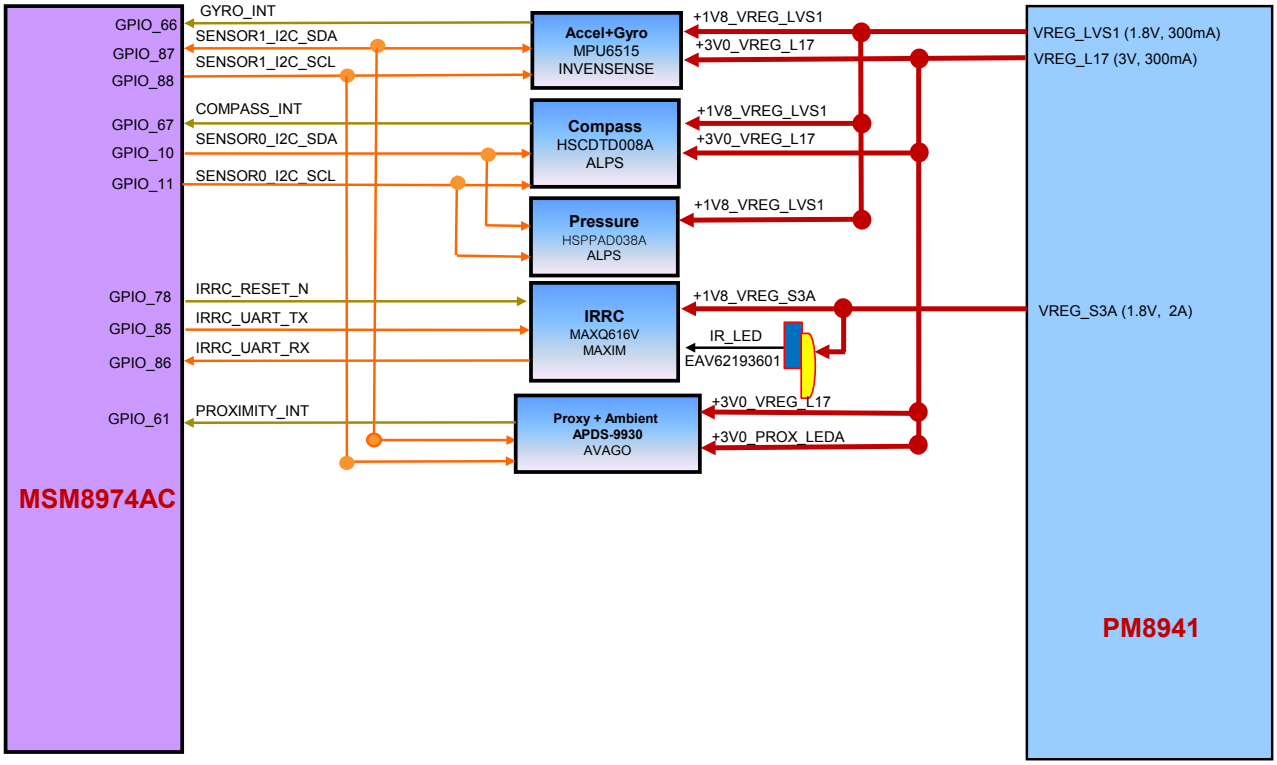

[AS985] Audio Codec I/F

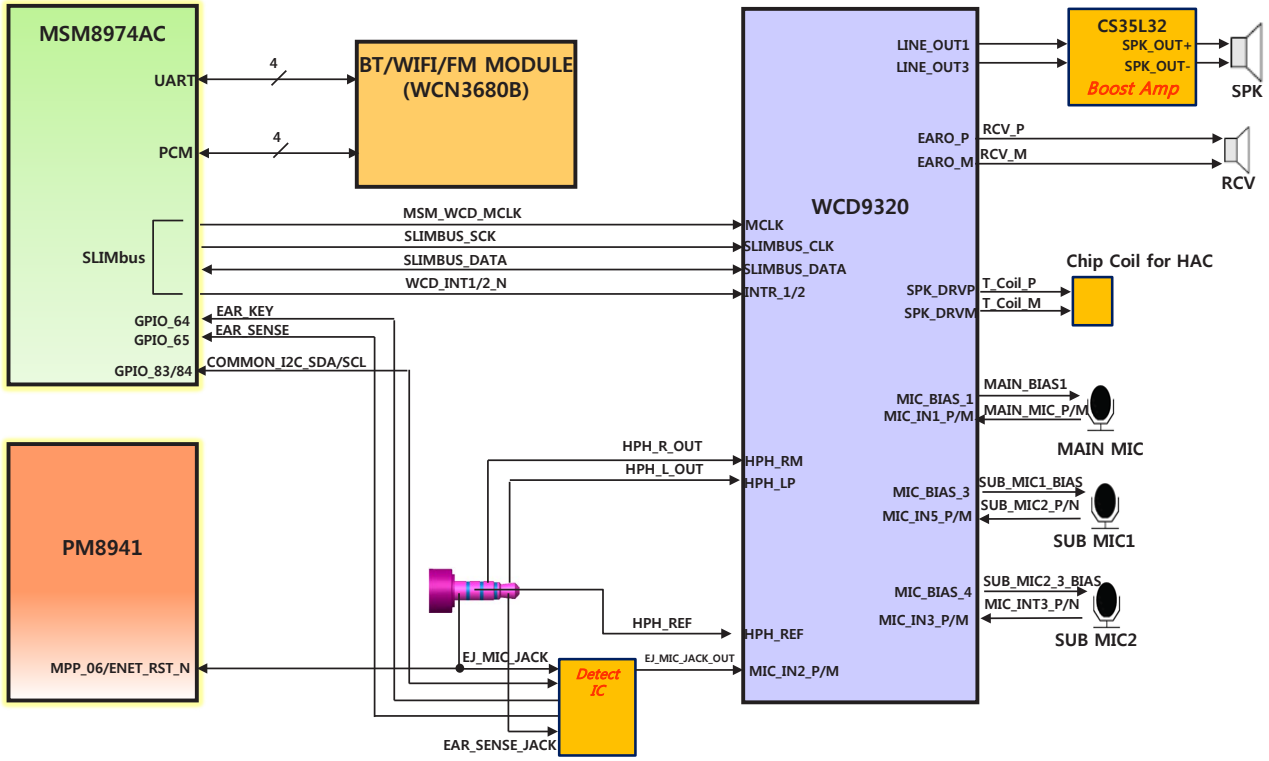

[AS985] NFC I/F

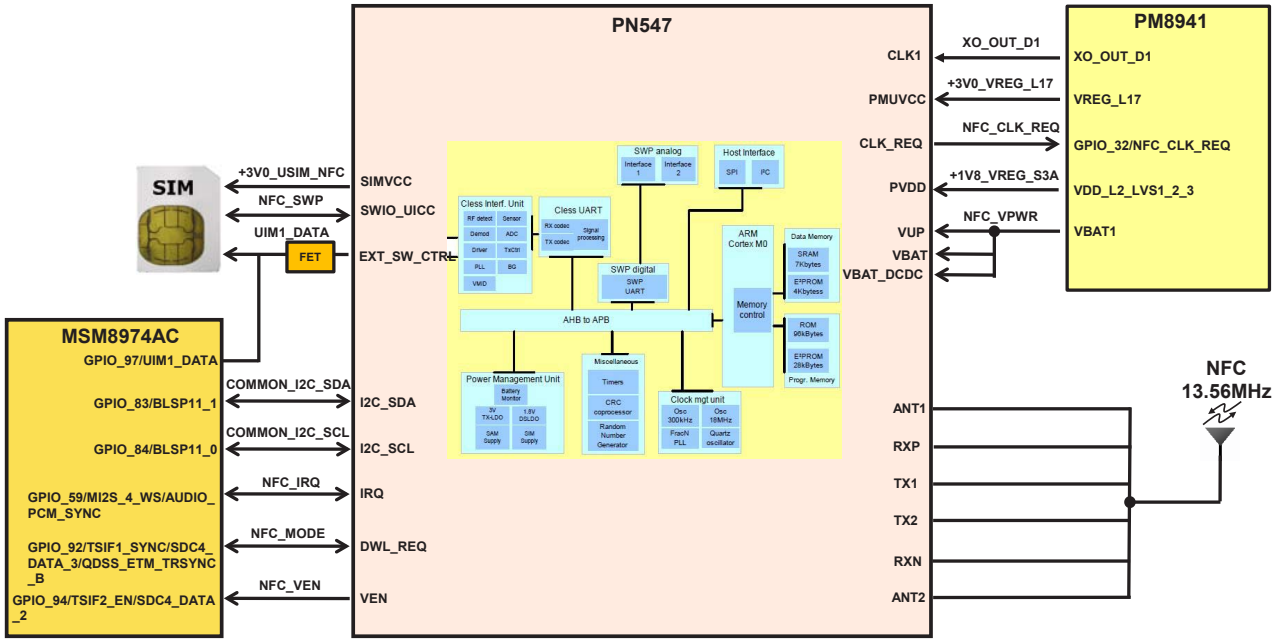

[AS985] BT / Wi-Fi

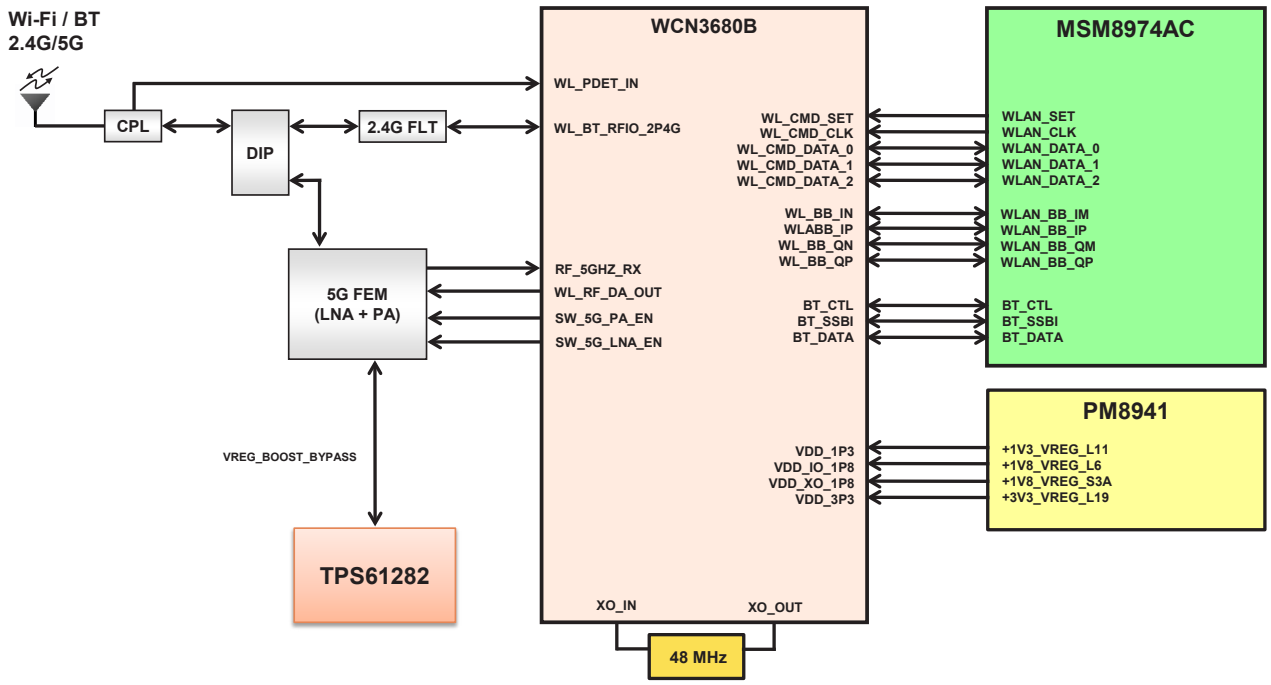

6. CIRCUIT DIAGRAM

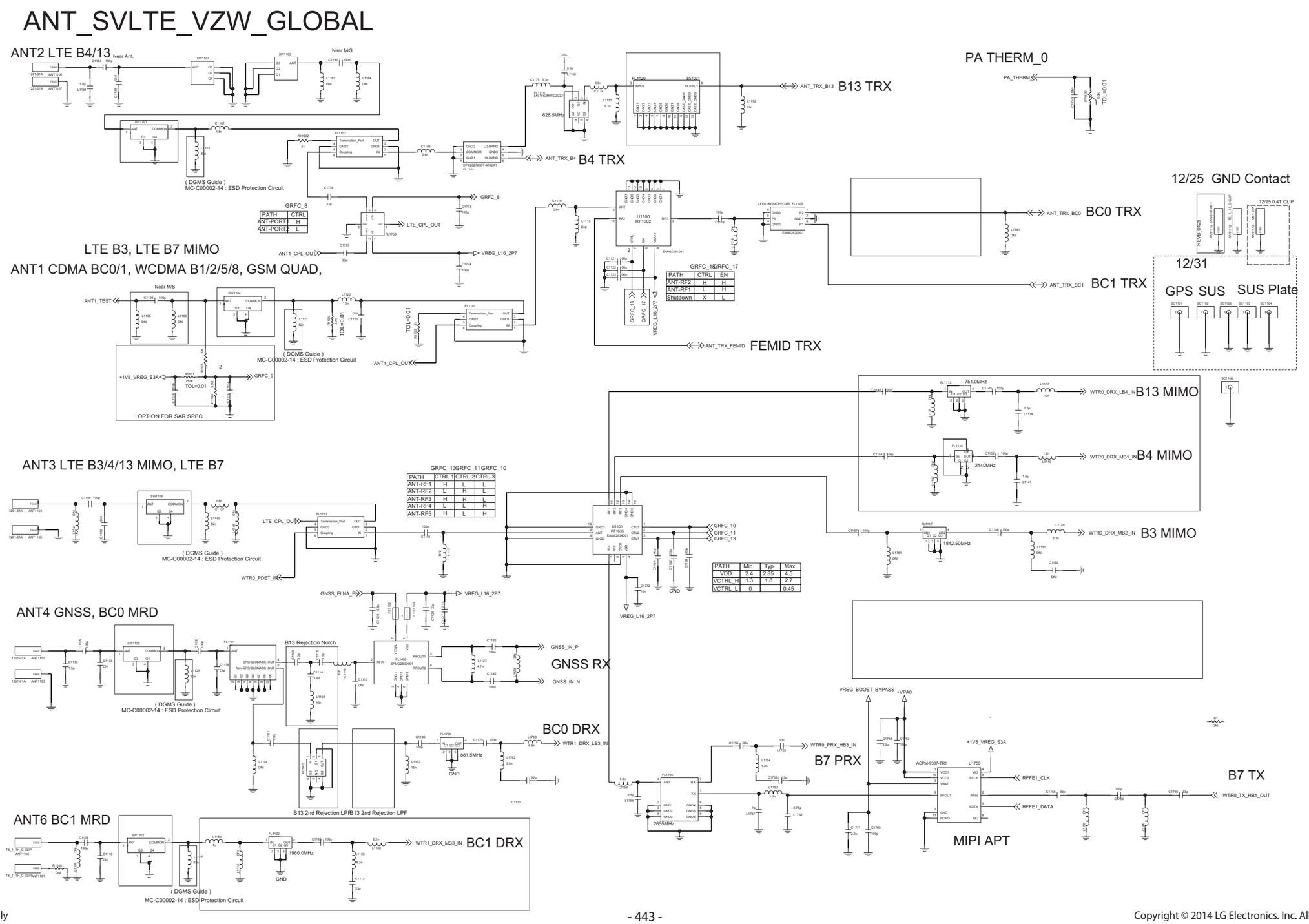

FEMID_SVLTE_VZW_GLOBAL

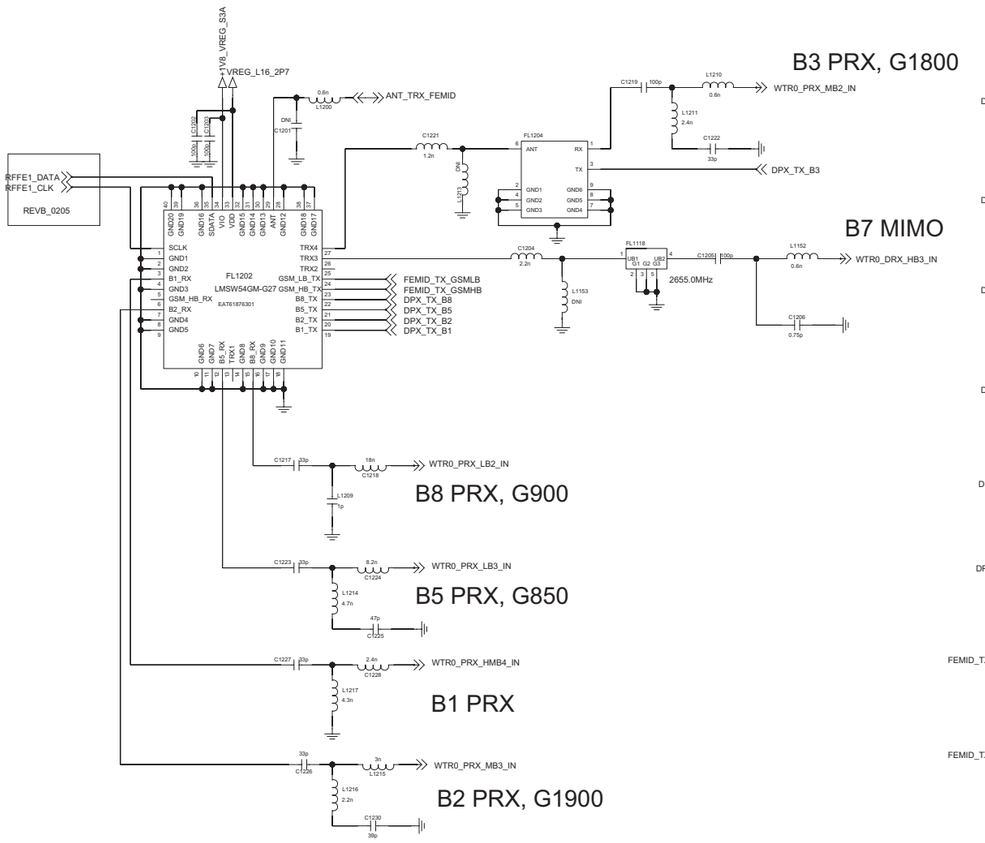

HCPA_APT_SKY77629

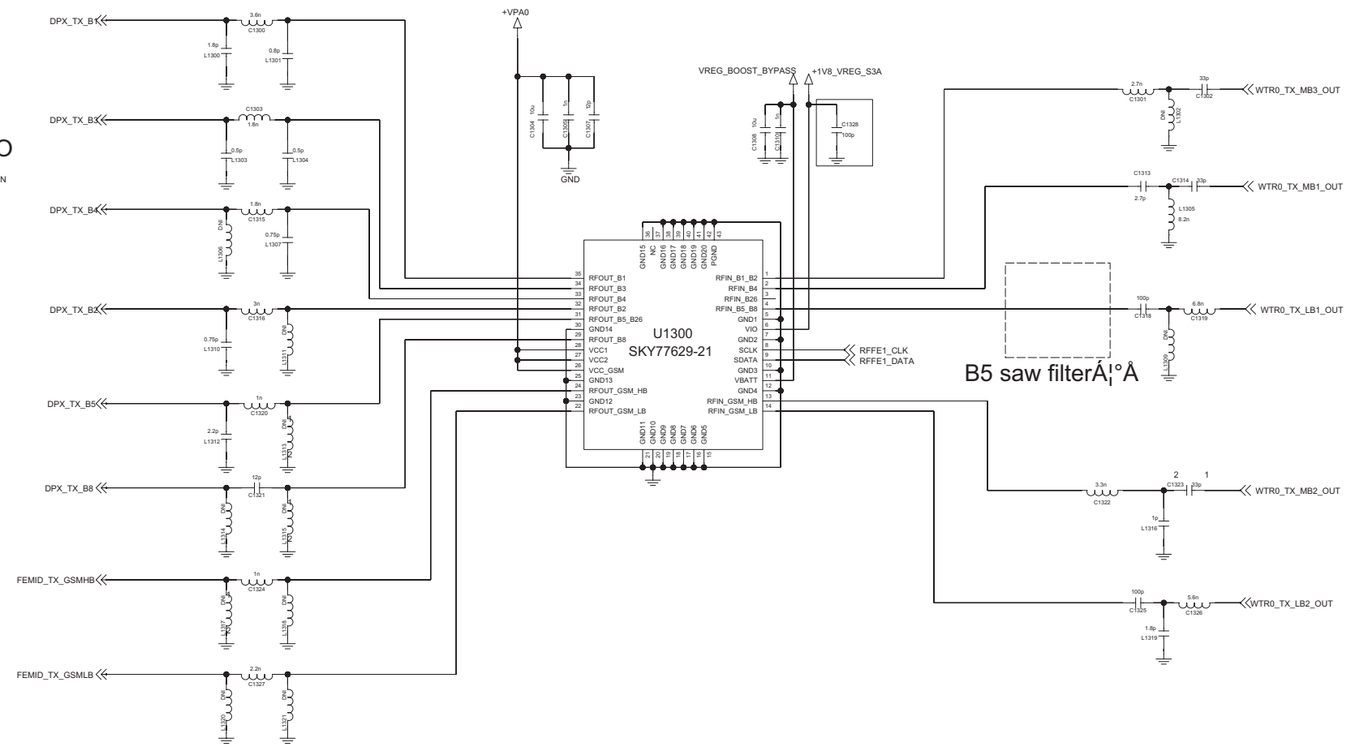

CDMA_BC0_BC1 TRX

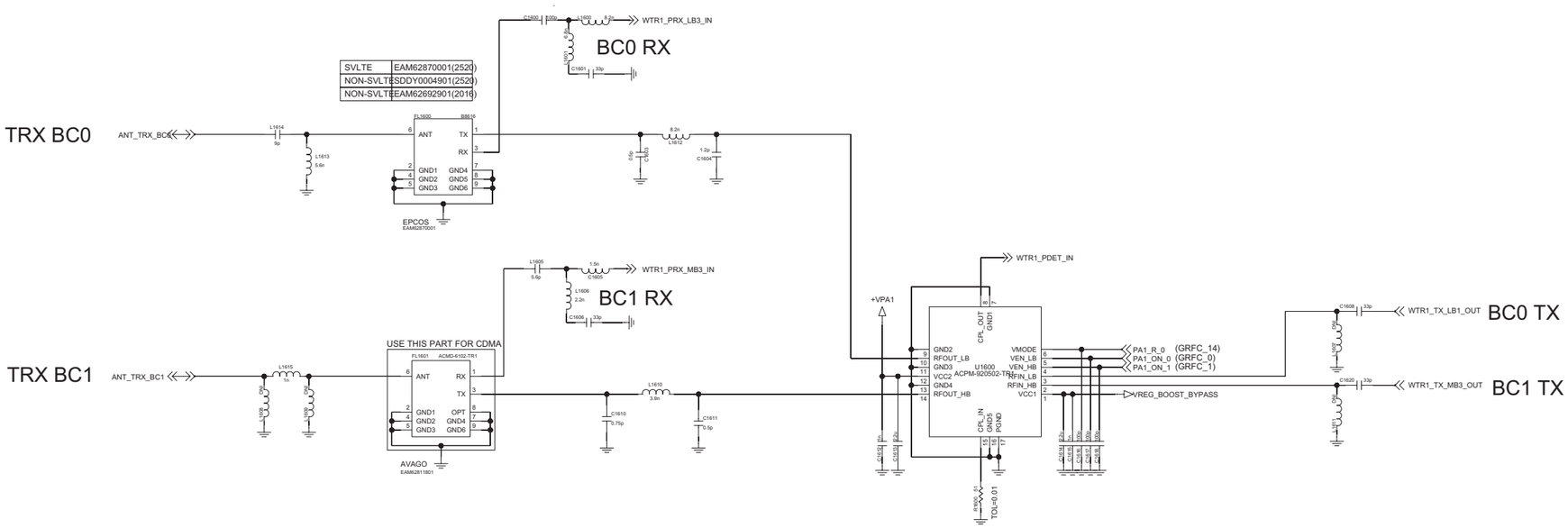

LTE B13_B4_TRX

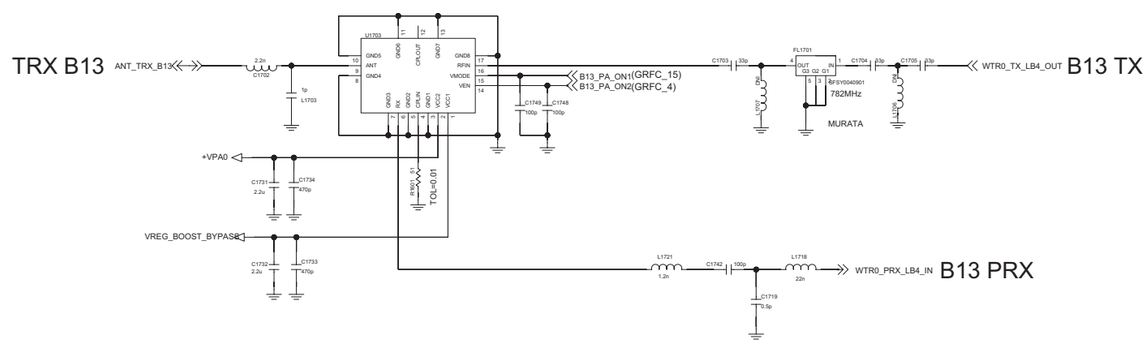

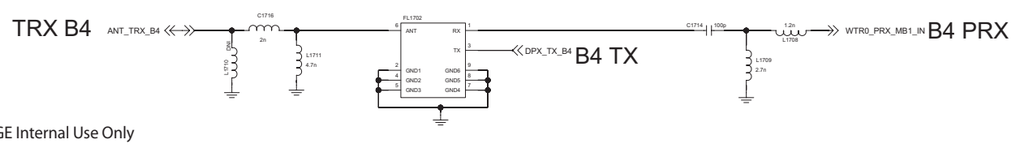

RF SWITCH

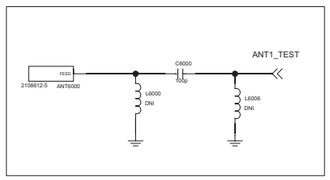

REVB_0205

Global_LTE_APT_LM3263

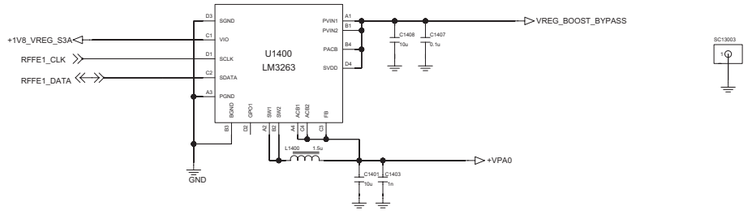

CDMA_APT_LM3263

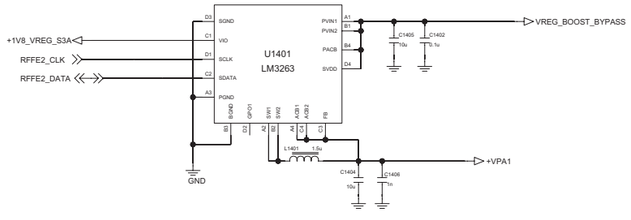

Global_LTE_WTR1625L

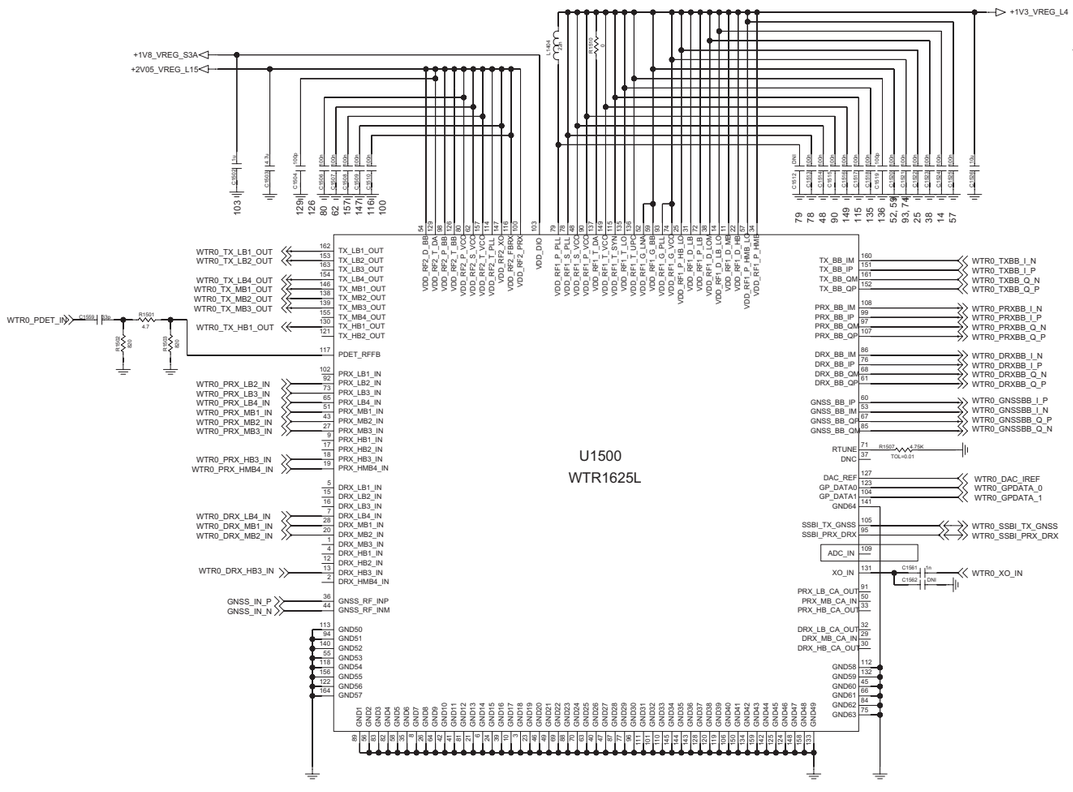

CDMA_WTR1625

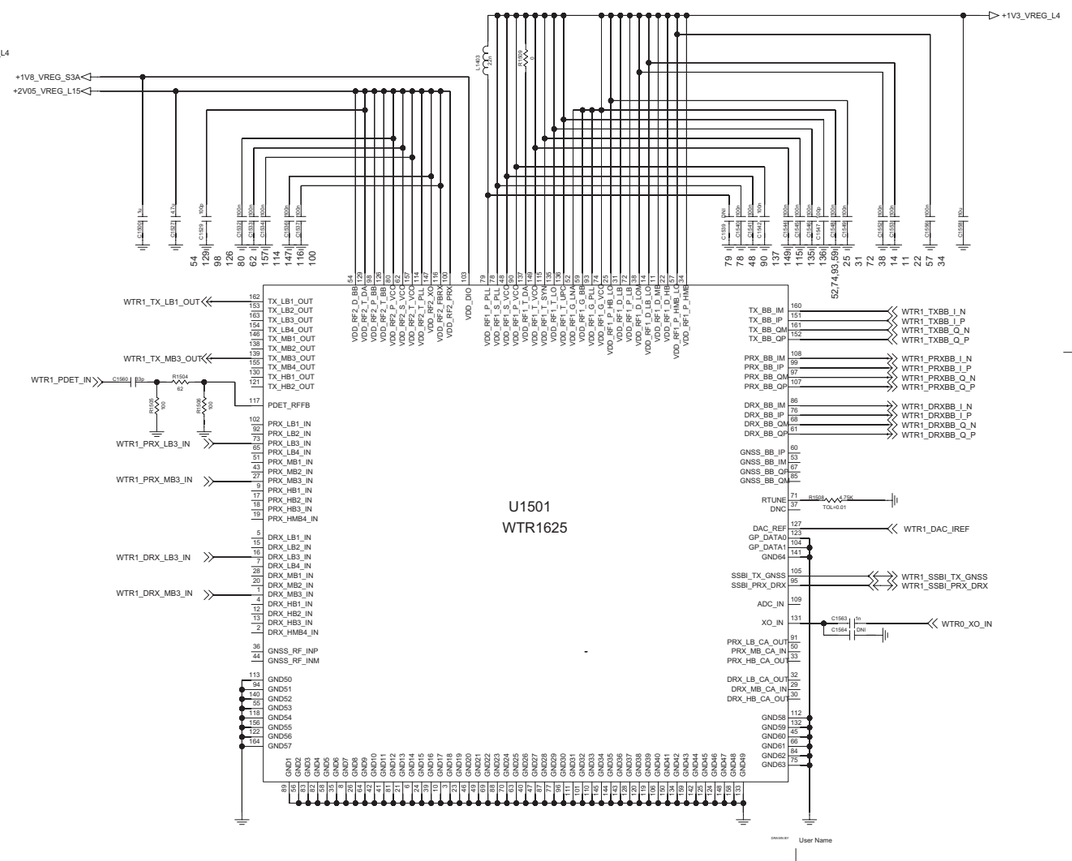

5-2-1-4_NFC_PN547 Rev_0.5

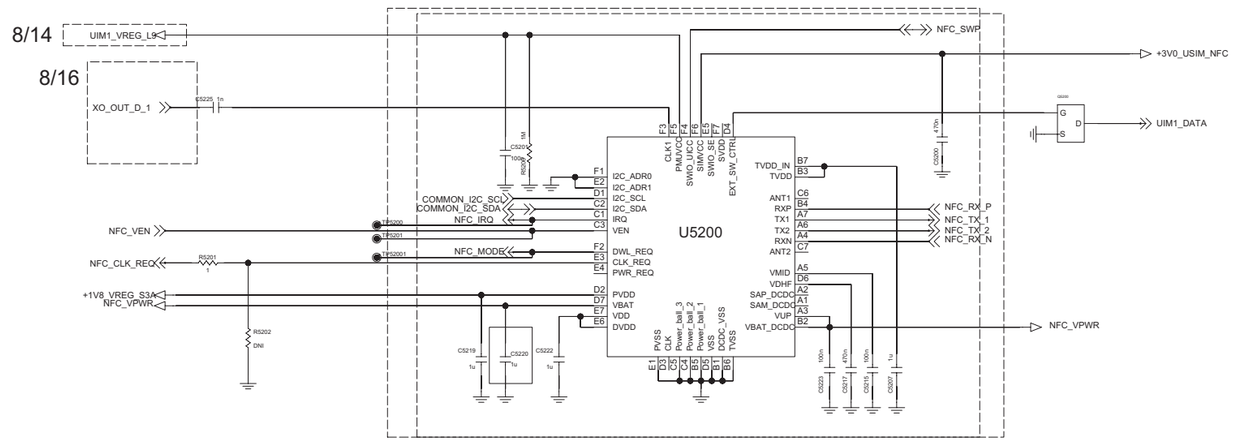

NFC Antenna

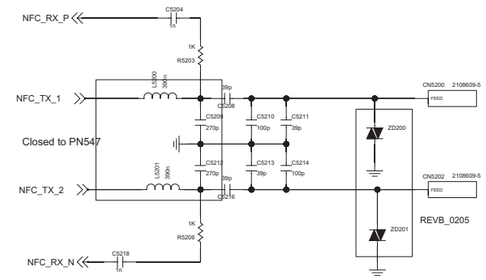

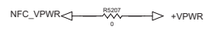

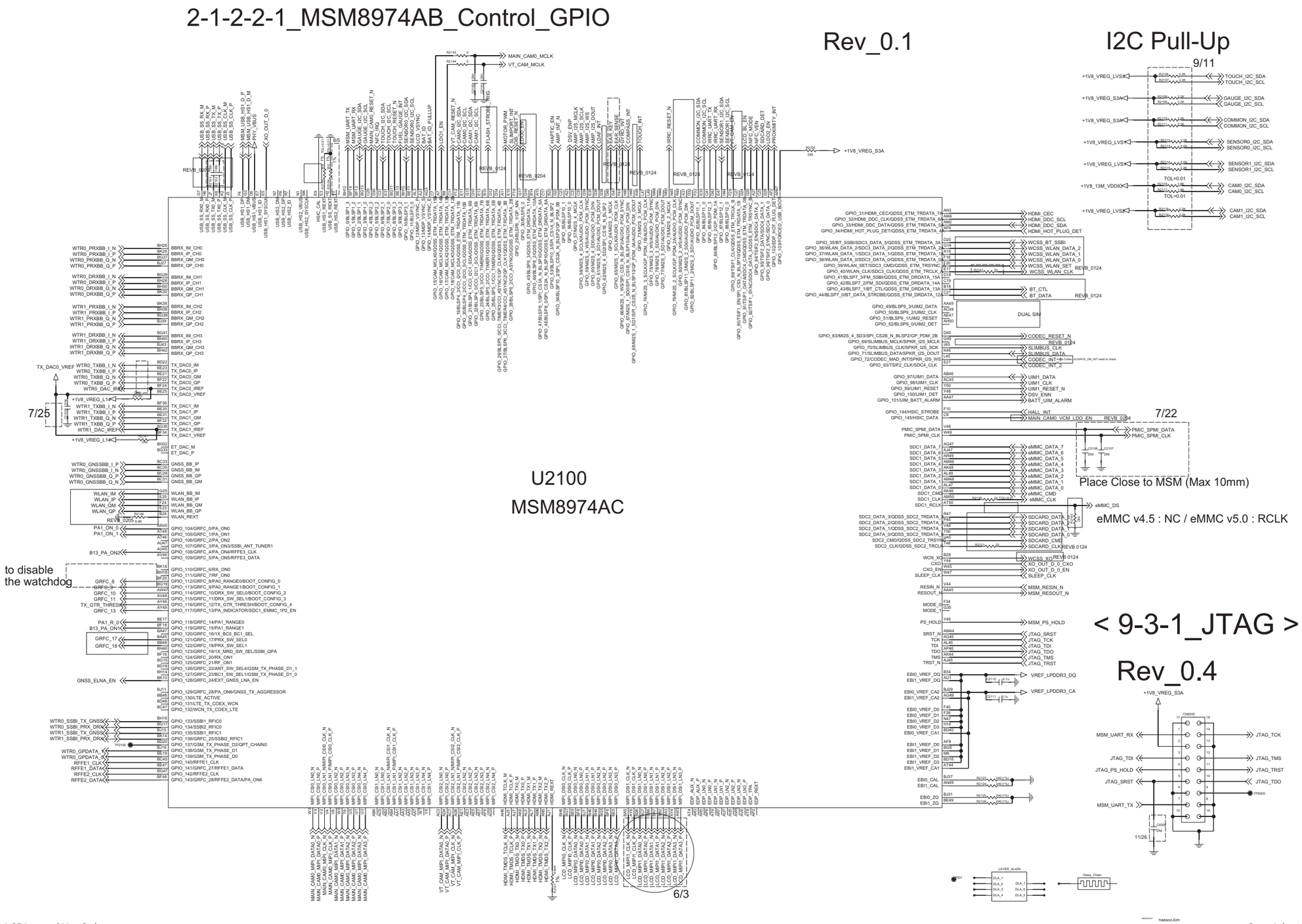

2-1-2-2-3_MSM8974AB_POWER
Rev_0.1

CCDS CARD Information	
Release Date	2013.08.26
Based on Reference Schematic	Rev.M
80-NA437-41_MSM8974-MSM8974AB_BASEBAND_REFERENCE_SCHEMATIC Rev.M	

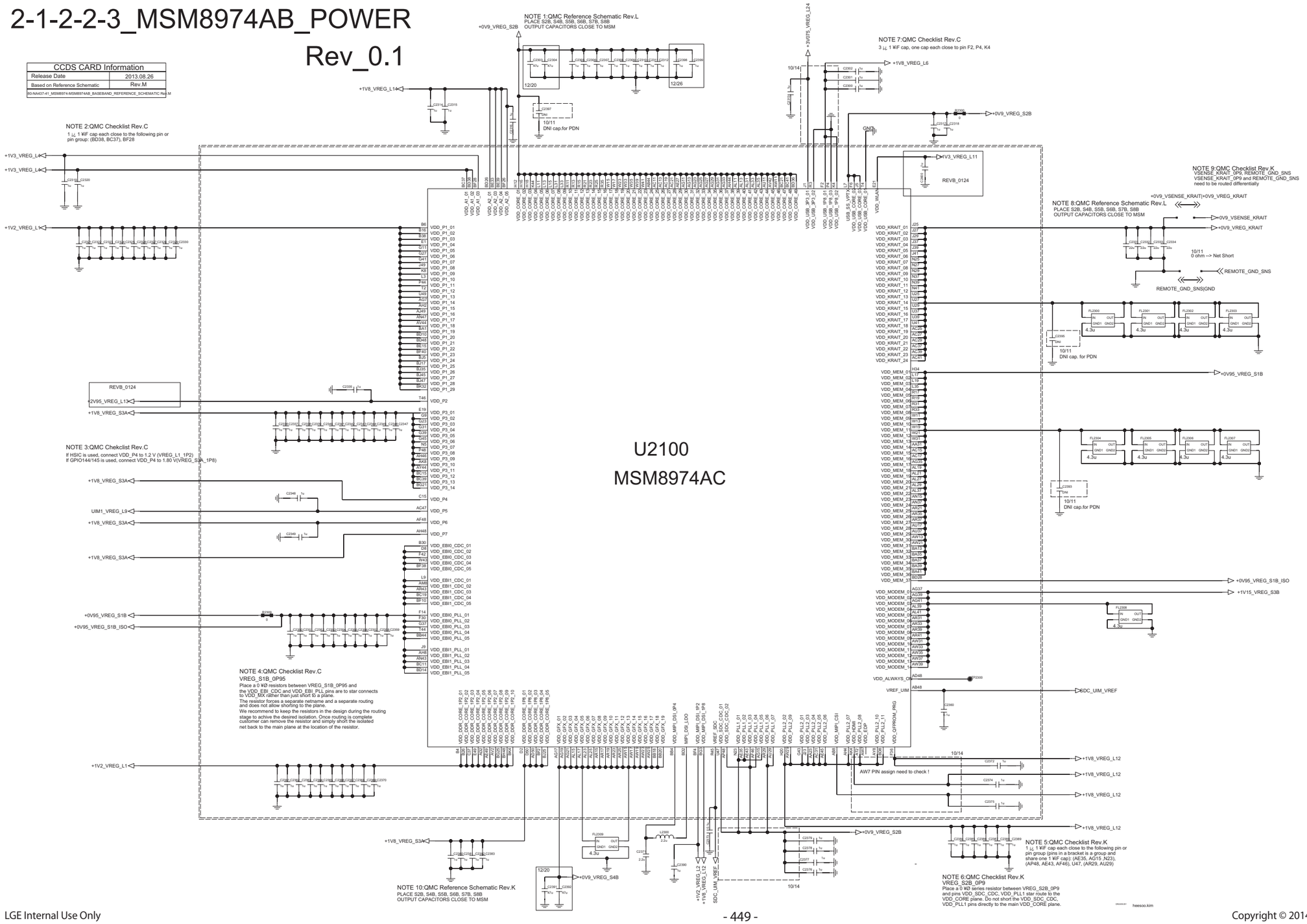

2-1-2-2-4_MSM8974AB GND & NC Rev_0.1

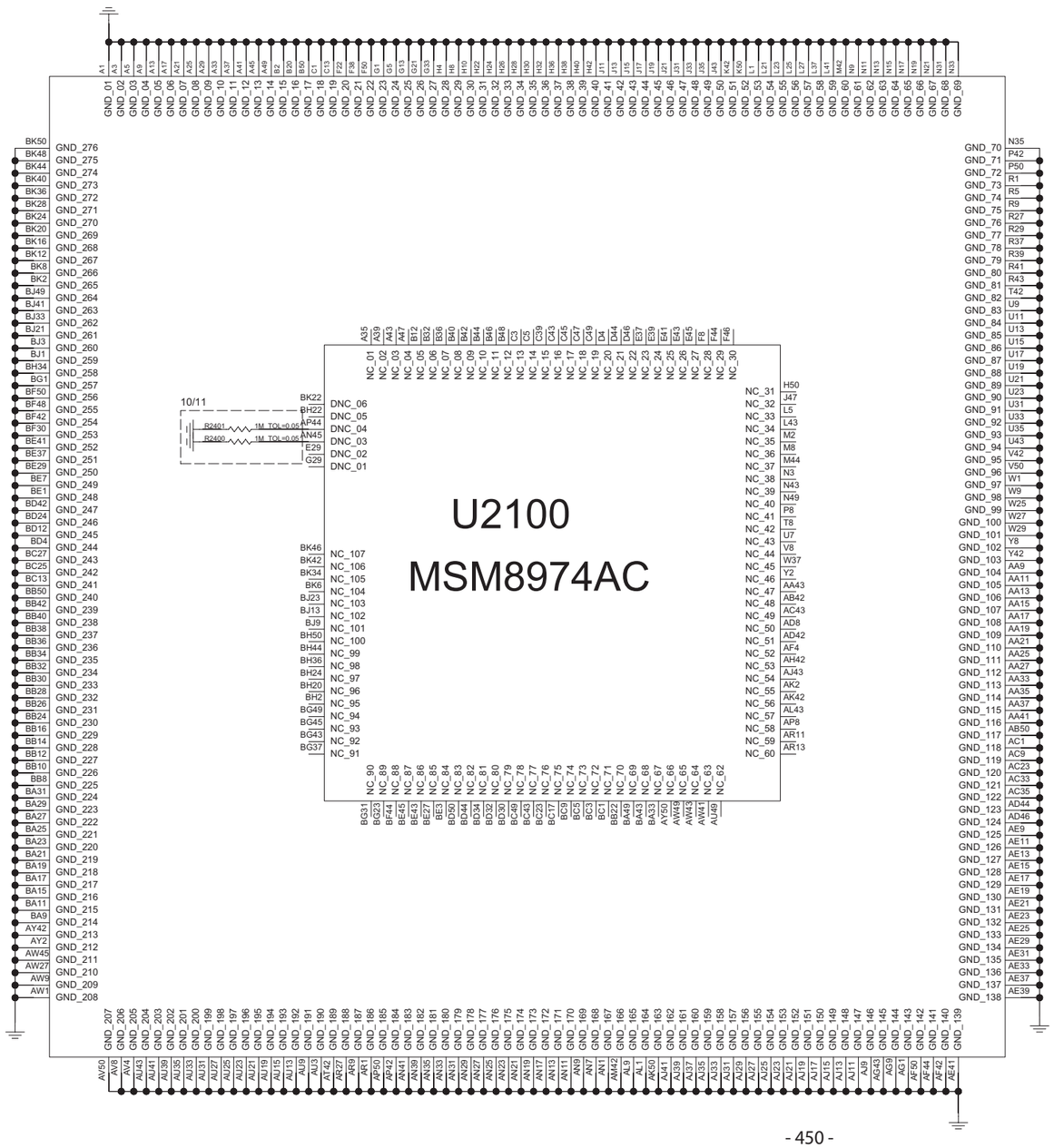

3-1-4-3-1_LPDDR3_POP_SK Hynix_16G-Bit Rev_0.3

3-2-2-3-1_eMMC_4_5_Toshiba_32G-Byte Rev_0.4

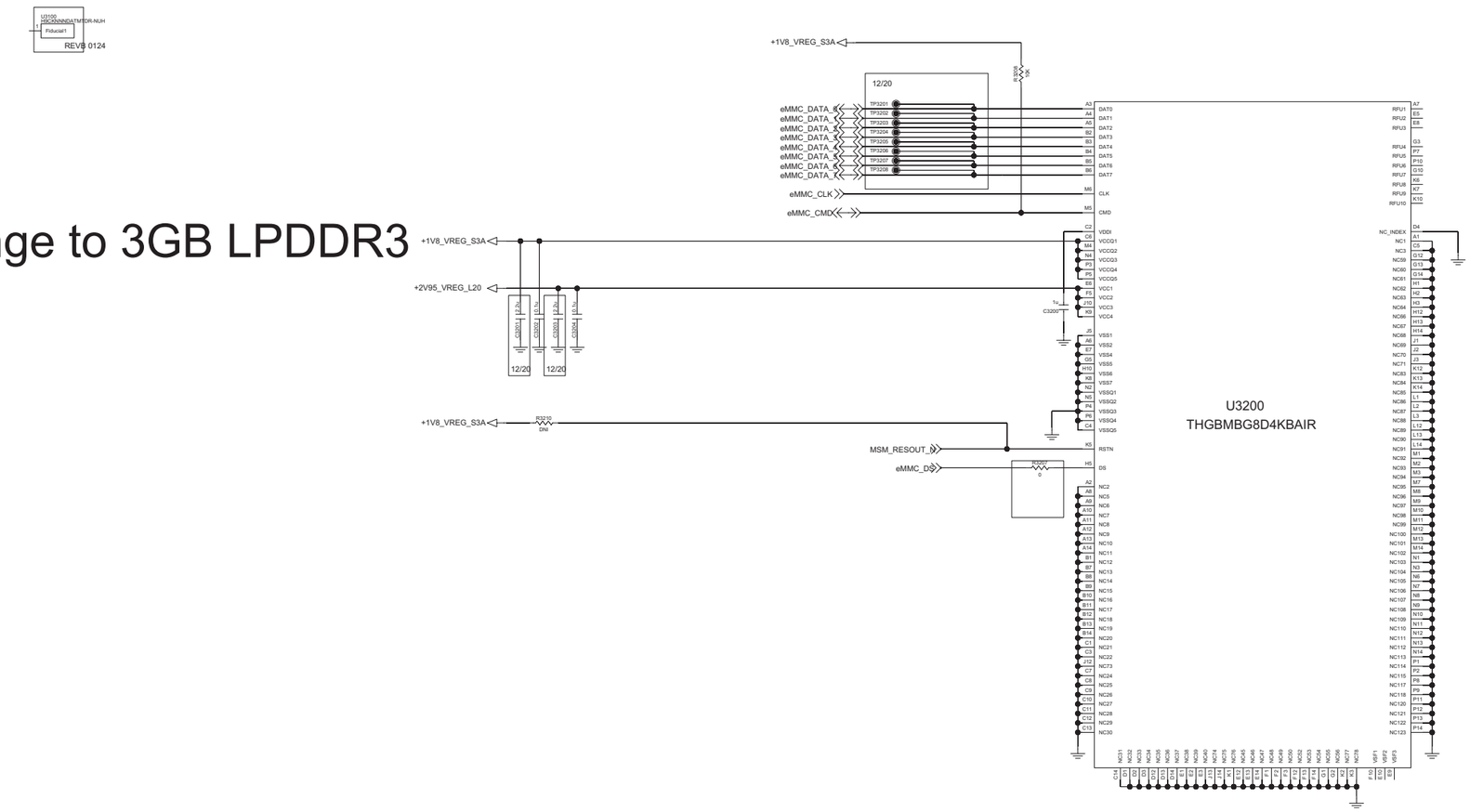

Have to Change to 3GB LPDDR3

4-2-1_PMIC_PM8841

Rev_0.3

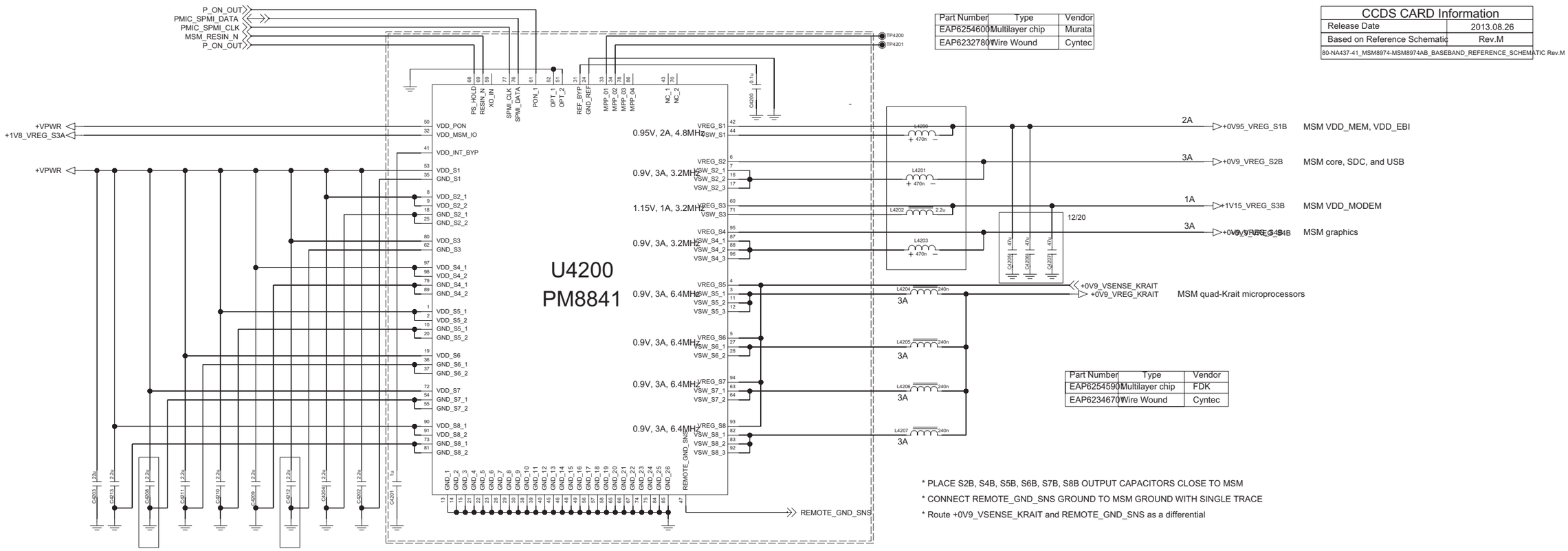

Part Number	Type	Vendor
EAP62546001	Multilayer chip	Murata
EAP62327801	Wire Wound	Cyntec

CCDS CARD Information	
Release Date	2013.08.26
Based on Reference Schematic	Rev.M
80-NA437-41_MSM8974-MSM8974AB_BASEBAND_REFERENCE_SCHEMATIC Rev.M	

Part Number	Type	Vendor
EAP62545901	Multilayer chip	FDK
EAP62346701	Wire Wound	Cyntec

* PLACE S2B, S4B, S5B, S6B, S7B, S8B OUTPUT CAPACITORS CLOSE TO MSM
* CONNECT REMOTE_GND_SNS GROUND TO MSM GROUND WITH SINGLE TRACE
* Route +0V9_VSENSE_KRAIT and REMOTE_GND_SNS as a differential

4-1-2_PMIC_PM8941

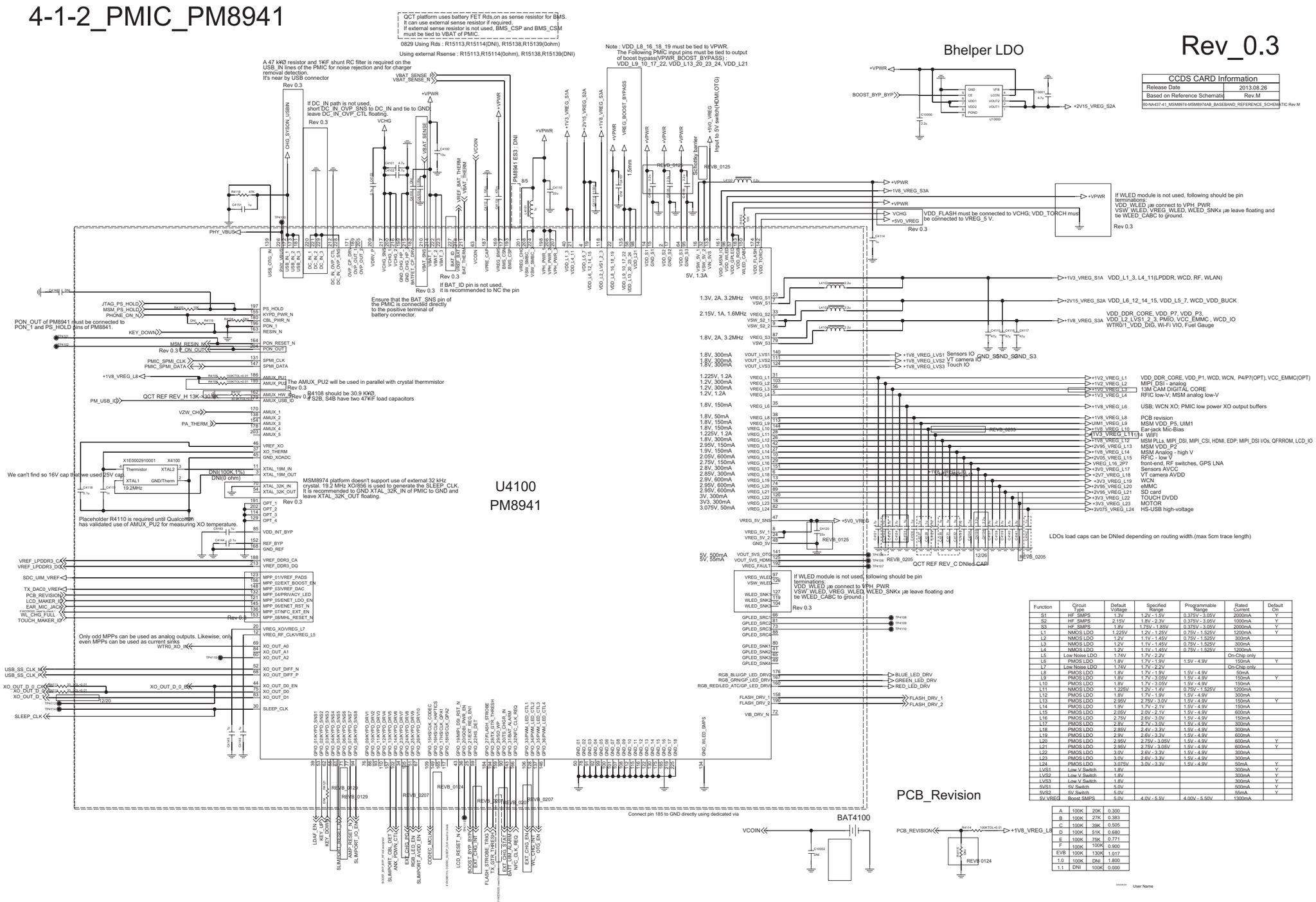

Function	Circuit Type	Default Voltage	Specified Range	Programmable Range	Rated Current	Default On
S1	HF_SMPS	1.3V	1.2V - 1.5V	0.375V - 3.05V	2000mA	Y
S2	HF_SMPS	2.15V	1.8V - 2.3V	0.375V - 3.05V	1000mA	Y
S3	HF_SMPS	1.8V	1.75V-1.85V	0.375V - 3.05V	2000mA	Y
L1	NMOS LDO	1.225V	1.2V - 1.25V	0.75V - 1.525V	1200mA	Y
L2	NMOS LDO	1.2V	1.1V - 1.45V	0.75V - 1.525V	300mA	
L3	NMOS LDO	1.2V	1.1V - 1.45V	0.75V - 1.525V	300mA	
L4	NMOS LDO	1.2V	1.1V - 1.45V	0.75V - 1.525V	1200mA	
L5	Low Noise LDO	1.74V	1.7V - 2.2V		On-Chip only	
L6	PMOS LDO	1.8V	1.7V - 1.9V	1.5V - 4.9V	150mA	Y
L7	Low Noise LDO	1.74V	1.7V - 2.2V		On-Chip only	
L8	PMOS LDO	1.8V	1.7V - 1.9V	1.5V - 4.9V	50mA	
L9	PMOS LDO	1.8V	1.7V - 3.05V	1.5V - 4.9V	150mA	Y
L10	PMOS LDO	1.8V	1.7V - 3.05V	1.5V - 4.9V	150mA	
L11	NMOS LDO	1.225V	1.2V - 1.4V	0.75V - 1.525V	1200mA	
L12	PMOS LDO	1.8V	1.7V - 1.9V	1.5V - 4.9V	300mA	
L13	PMOS LDO	2.95V	2.75V - 3.0V	1.5V - 4.9V	150mA	Y
L14	PMOS LDO	1.9V	1.7V - 2.1V	1.5V - 4.9V	150mA	
L15	PMOS LDO	2.05V	2.0V - 2.1V	1.5V - 4.9V	600mA	
L16	PMOS LDO	2.75V	2.6V - 3.0V	1.5V - 4.9V	150mA	
L17	PMOS LDO	2.8V	2.7V - 3.0V	1.5V - 4.9V	300mA	
L18	PMOS LDO	2.85V	2.4V - 3.3V	1.5V - 4.9V	300mA	
L19	PMOS LDO	2.9V	2.6V - 3.3V	1.5V - 4.9V	600mA	
L20	PMOS LDO	2.95V	2.75V - 3.05V	1.5V - 4.9V	600mA	Y
L21	PMOS LDO	2.95V	2.75V - 3.05V	1.5V - 4.9V	600mA	Y
L22	PMOS LDO	3.0V	2.6V - 3.3V	1.5V - 4.9V	300mA	
L23	PMOS LDO	3.0V	2.6V - 3.3V	1.5V - 4.9V	300mA	
L24	PMOS LDO	3.075V	3.0V - 3.3V	1.5V - 4.9V	50mA	Y
LVS1	Low V Switch	1.8V			300mA	Y
LVS2	Low V Switch	1.8V			300mA	Y
LVS3	Low V Switch	1.8V			300mA	Y
5VS1	5V Switch	5.0V			500mA	Y
5VS2	5V Switch	5.0V			55mA	Y
5V_VREG	Boost SMPS	5.0V	4.0V - 5.5V	4.000V - 5.500V	1300mA	

A	100K	20K	0.300
B	100K	27K	0.383
C	100K	39K	0.505
D	100K	51K	0.680
E	100K	75K	0.771
F	100K	100K	0.900
EVB	100K	130K	1.017
1.0	100K	DNI	1.800
1.1	DNI	100K	0.000

4-9-1-4-3_Bypass_Booster_Single_TPS61282 Rev_0.3

H Volt LDO Bypass boost

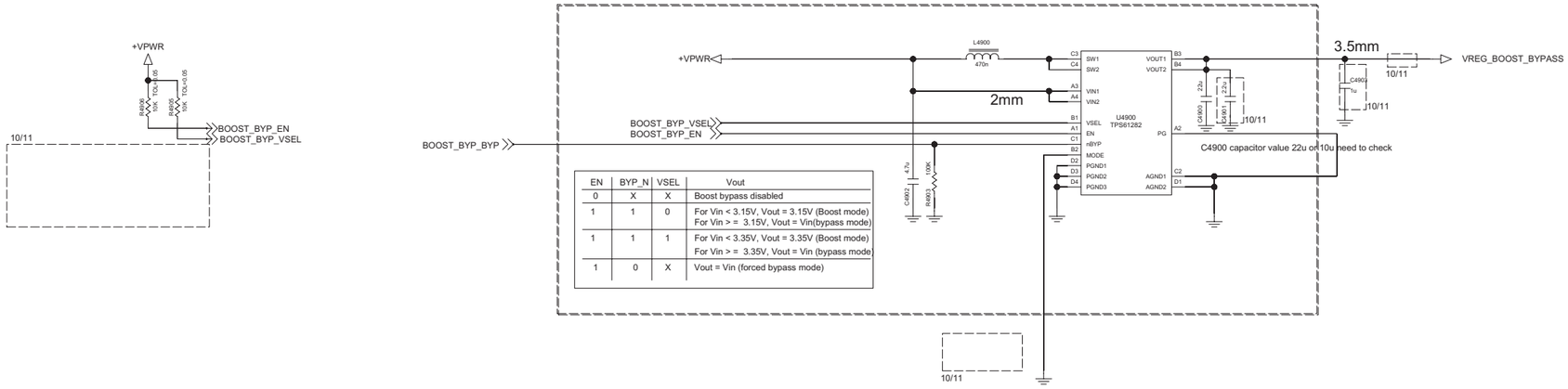

EN	BYP_N	VSEL	Vout
0	X	X	Boost bypass disabled
1	1	0	For Vin < 3.15V, Vout = 3.15V (Boost mode) For Vin > = 3.15V, Vout = Vin(bypass mode)
1	1	1	For Vin < 3.35V, Vout = 3.35V (Boost mode) For Vin > = 3.35V, Vout = Vin (bypass mode)
1	0	X	Vout = Vin (forced bypass mode)

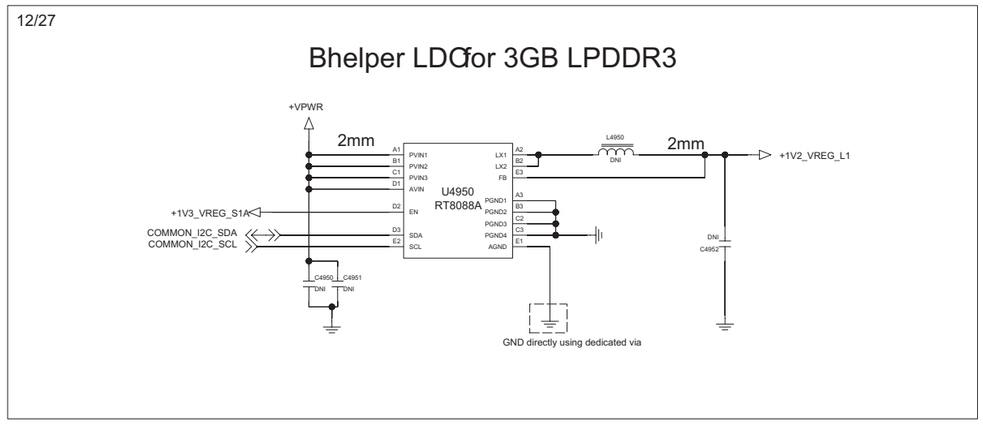

9-1-2_Battery_CNT_4P REV.0.5

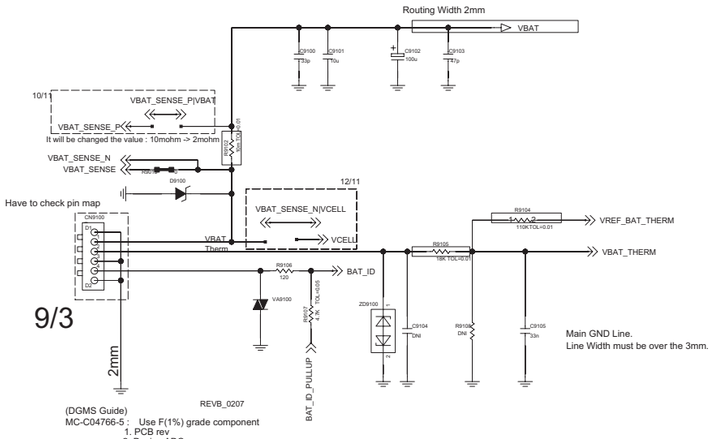

(DGMS Guide)
MC-C04766-5 : Use F(1%) grade component
1. PCB rev
2. Device ADC
3. Thermistor, temperature pheri.
(DGMS Guide)
MC-C00073-15 : Apply to large capacity around the bat connector
1. Over 47uF around the bat connector
2. Over 100uF totally on Vbat line
Use the TVS diode of VR=5V, when TVS diode have to use for ESD

4-8-1_Fuel_Gauge_MAX17048 Rev_0.3

Only use line VBAT1 from Battery Connector.
CLOSE TO Battery CONNECTOR

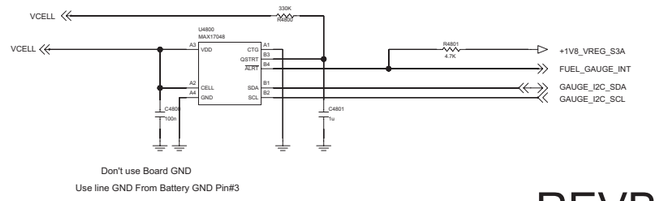

SINGLE charger IC

4-7-2-4_Charger_Switching_BQ24192 Rev_0.3

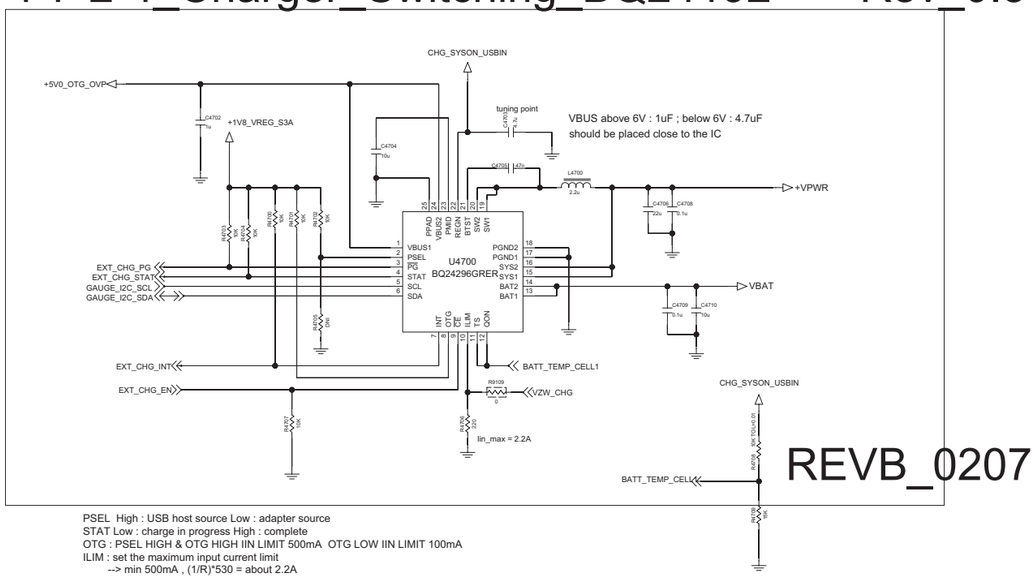

PSEL High : USB host source Low : adapter source
STAT Low : charge in progress High : complete
OTG : PSEL HIGH & OTG HIGH IIN LIMIT 500mA OTG LOW IIN LIMIT 100mA
ILIM : set the maximum input current limit
--> min 500mA , (1/R)*530 = about 2.2A

9-2-3-1_USB_Redriver_SN65LVPE502A Rev_0.3

REVB_0204

9-2-2_Multi_IO_USB3_0 Rev_0.3

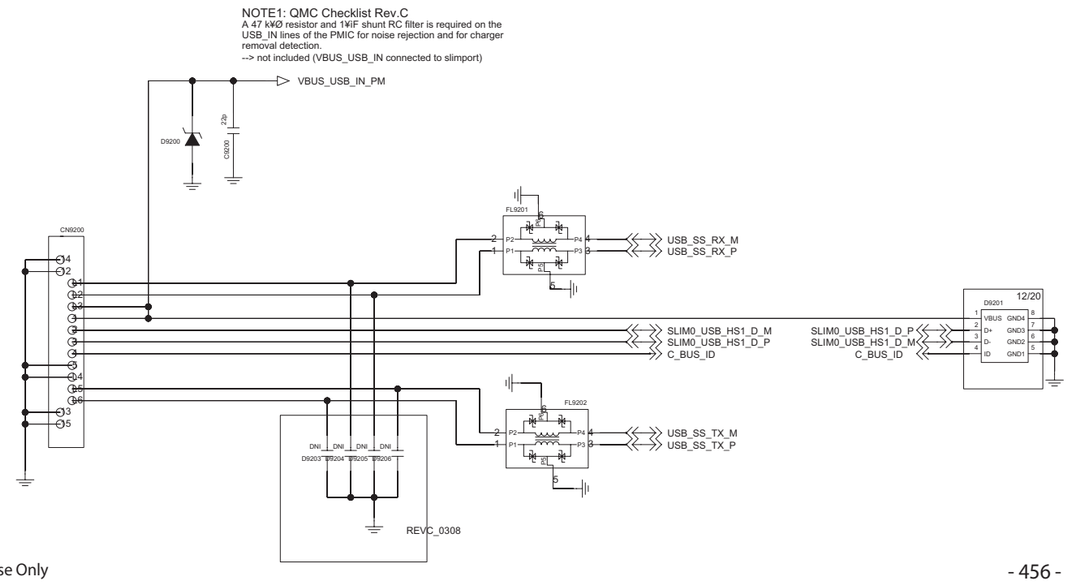

7-1-8-4-2_Quad_LCD_5.5" Rev_0.1

11/8

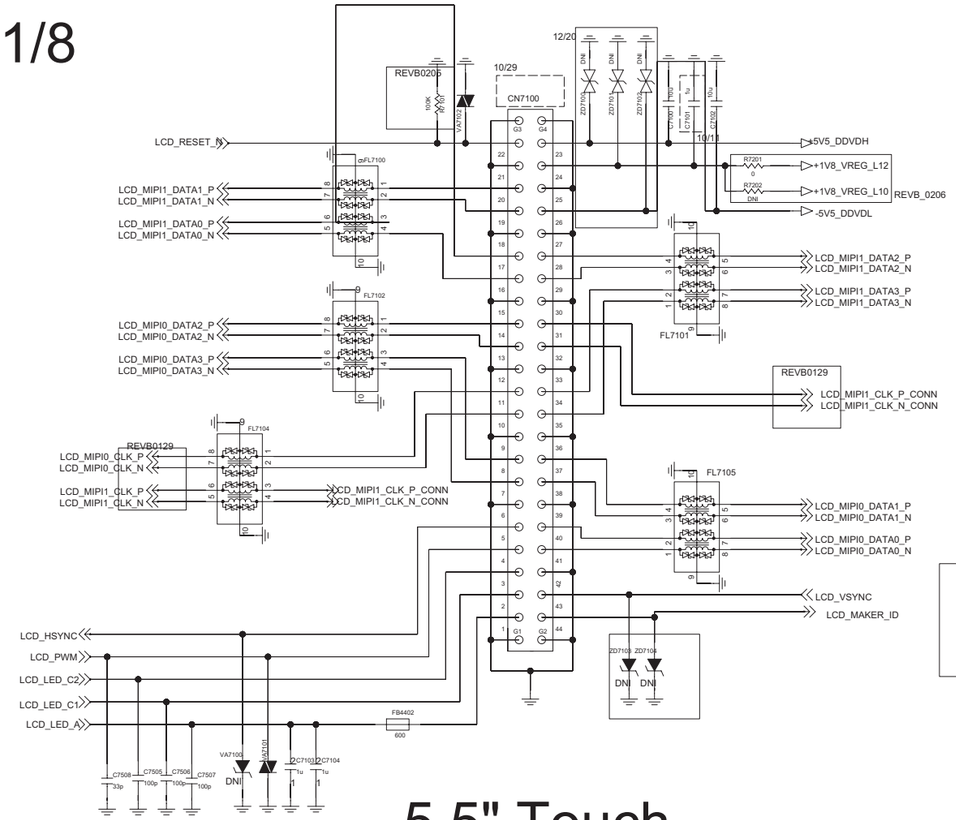

5.5" Touch

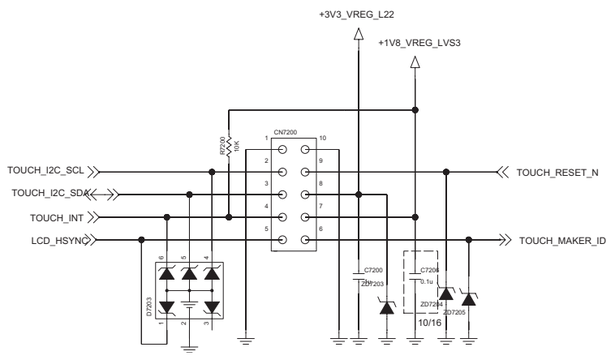

RevB_0213

7-5-1_DSV_TPS65132 Rev_0.3

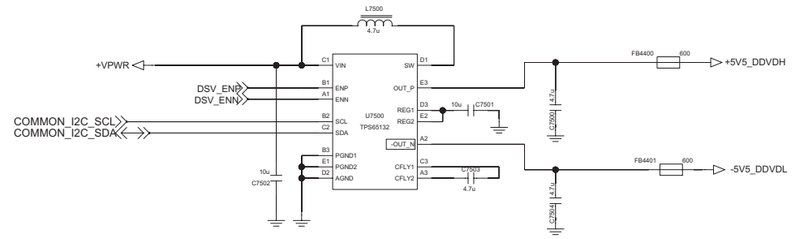

DGMS Guide
MC-C06162-1 : 1. Don't connect Positive of Tantal, TVS diode to Negative voltage if use
2. We recommend MLCC capacitor in this case

RevB_0213

4-4-4_LCD_BL_Booster_LM3697
Rev_0.1

LED Vf=3.2V, If=23mA/46mA(2string), 2P7S
20% inductor tolerance => fsw=500khz : Ipeak = 722.6mA, fsw=1MHz : Ipeak = 541.9mA
30% inductor tolerance => fsw=500khz : Ipeak = 774.2mA, fsw=1MHz : Ipeak = 567.7mA

LED Vf=3.0V, If=20mA/46mA(2string), 2P7S
20% inductor tolerance => fsw=500khz : Ipeak = 651.9mA, fsw=1MHz : Ipeak = 473.3mA
30% inductor tolerance => fsw=500khz : Ipeak = 702.9mA, fsw=1MHz : Ipeak = 498.9mA

If you have other LED spec&quantity, recaculate Ipeak And select Power inductor

Vout_max = 22.7V at Vf=3.2V, 2P7S, Headroom V=0.3V
You select diode spec : VR > Vout_max, If > LED If(all string current), I_FRM > Inductor Ipeak

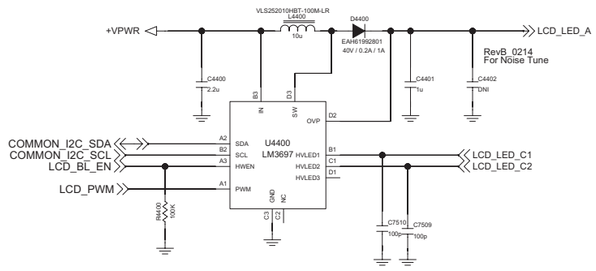

SLIMPORT/USB3.0

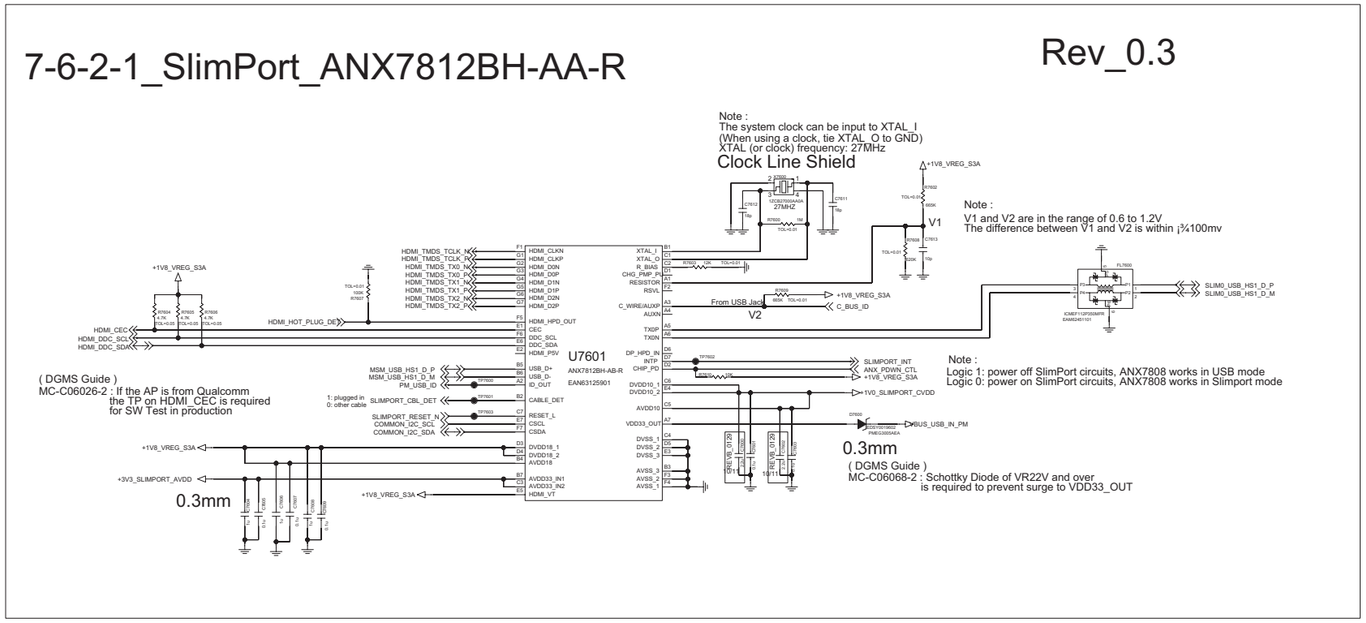

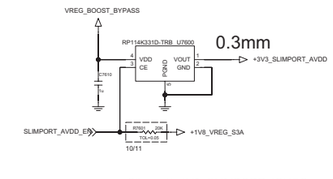

(Slimport)+1V0_SLIMPORT_IOVCC

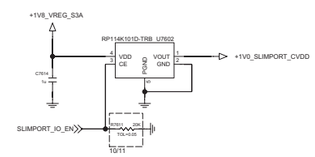

WLC

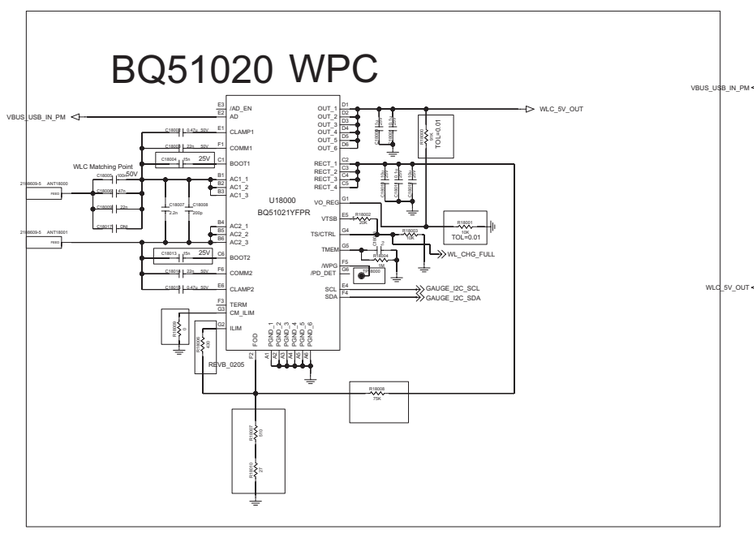

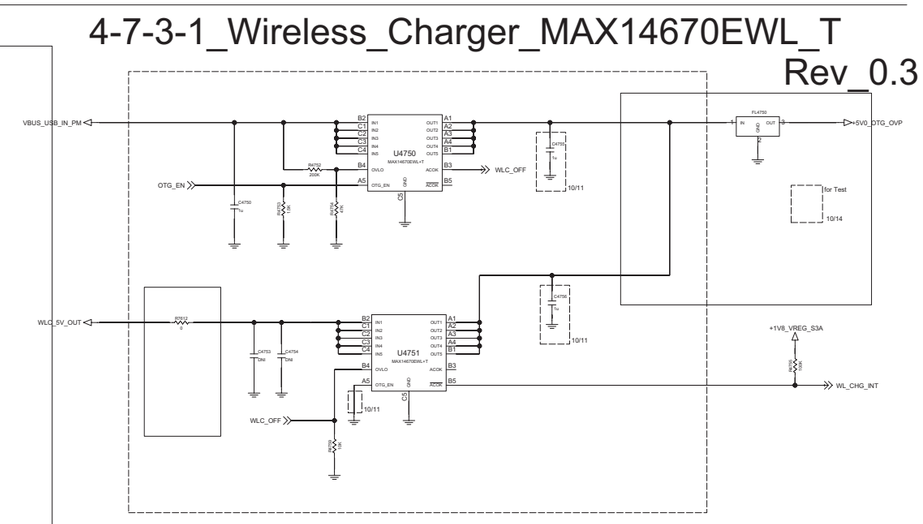

REVB_0204

13M_OIS_CAMERA_same as B1(F350L)

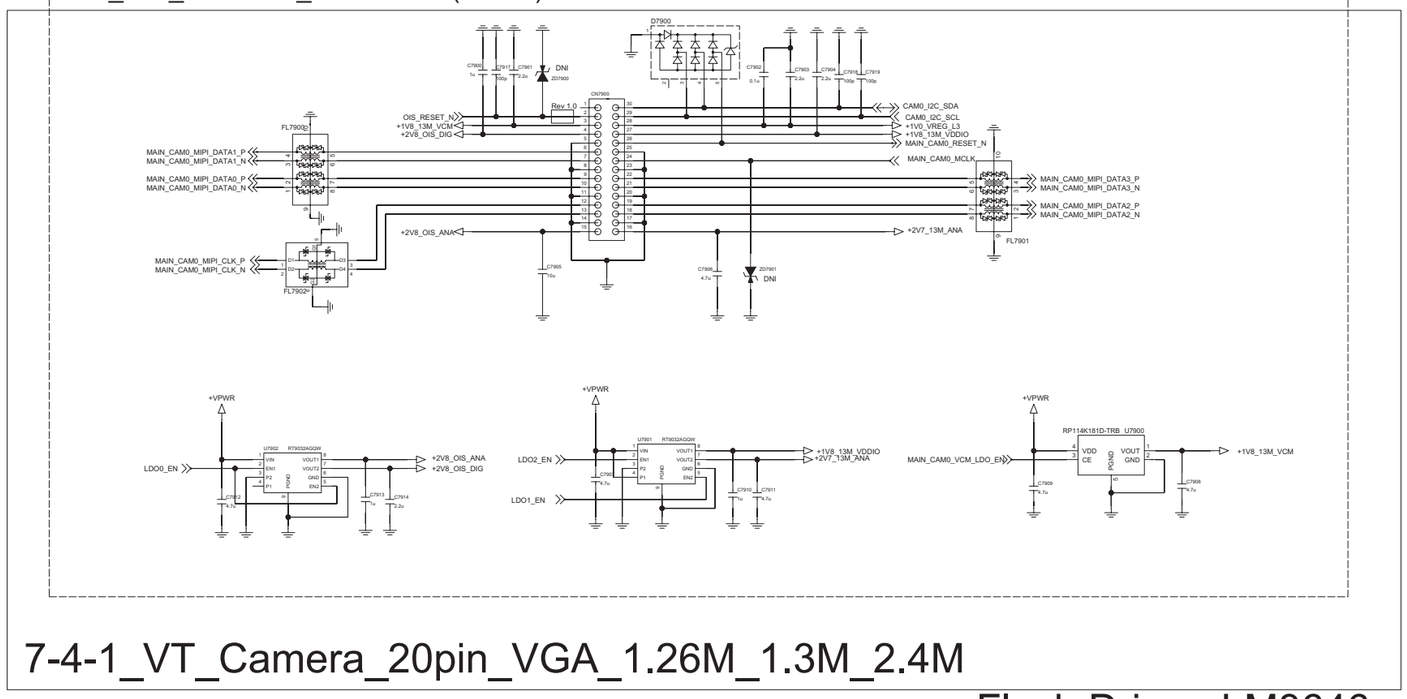

7-4-1_VT_Camera_20pin_VGA_1.26M_1.3M_2.4M

Rev_0.3

Flash Driver_LM3646

11/25

[DGMS Guide]
MC-C00081-17: 1. Add ESD Protection curcuit for Camera signal lines
2. Use under 100ohm/15pF ESD protection for over 2MP Camera

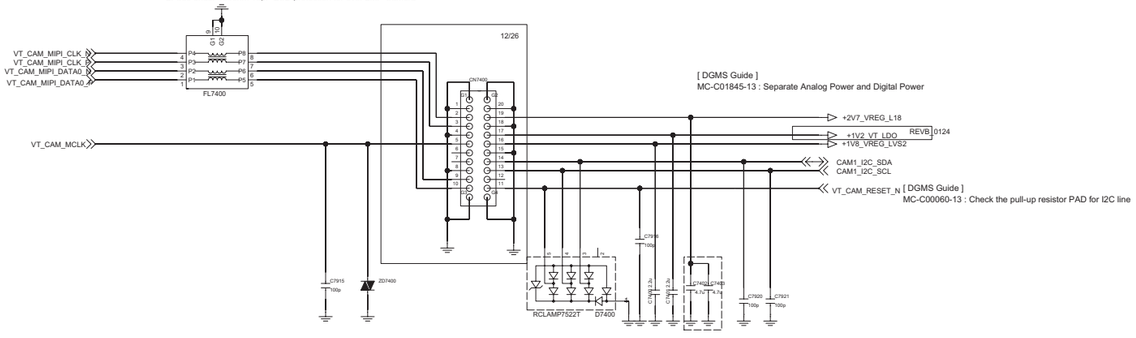

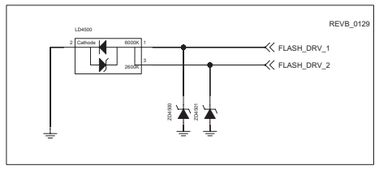

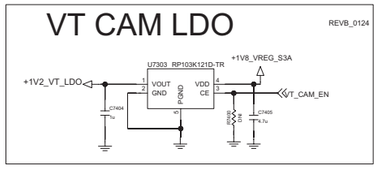

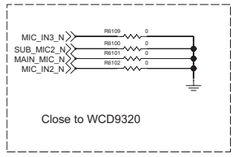

12/16

SPK BOOST AMP

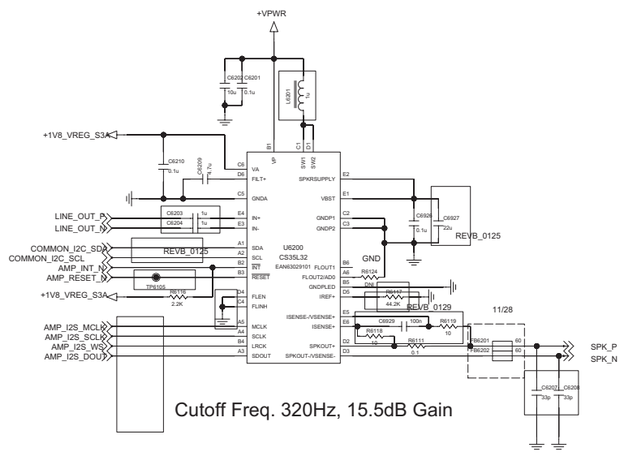

6-1-1-5_WCD9320 REV_0.3

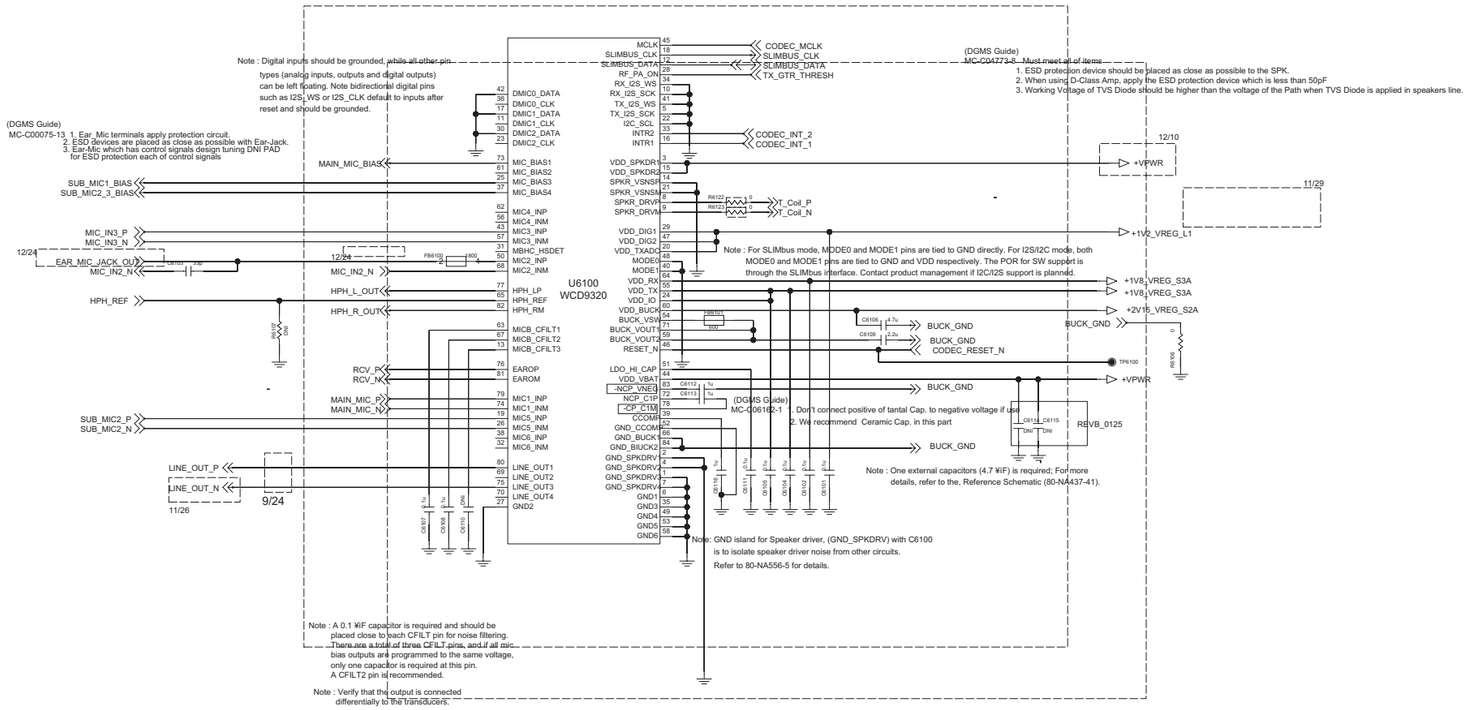

Main MIC

Lower FPCB assigned

Sub_MIC1

Upper FPCB assigned

(DGMS Guide)
MC-C00074-11 : For ESD Protection / Tuning points
When USE) TVS devices's Working Voltage must be greater than the Path voltage

Sub_MIC2

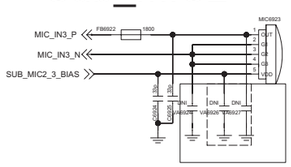

Sub_MIC3

Deleted

6-8-2_Receiver

Rev_0.4

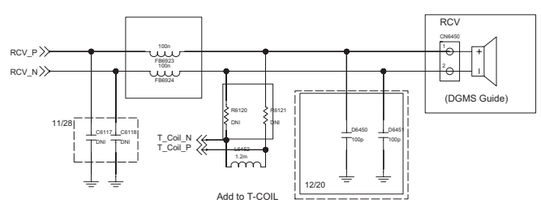

MC-C04773-8 : For ESD Protection / Tuning points
When USE) TVS devices's Working Voltage must be greater than the Path voltage

6-7-1_Speaker

Rev_0.4

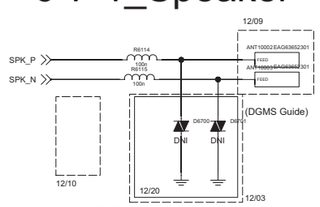

MC-C04773-8 : For ESD Protection / Tuning points
When USE) TVS devices's Working Voltage must be greater than the Path voltage
should apply capacitor under 50pF value for ESD protection with d-class amp

Earjack detect IC 12/4

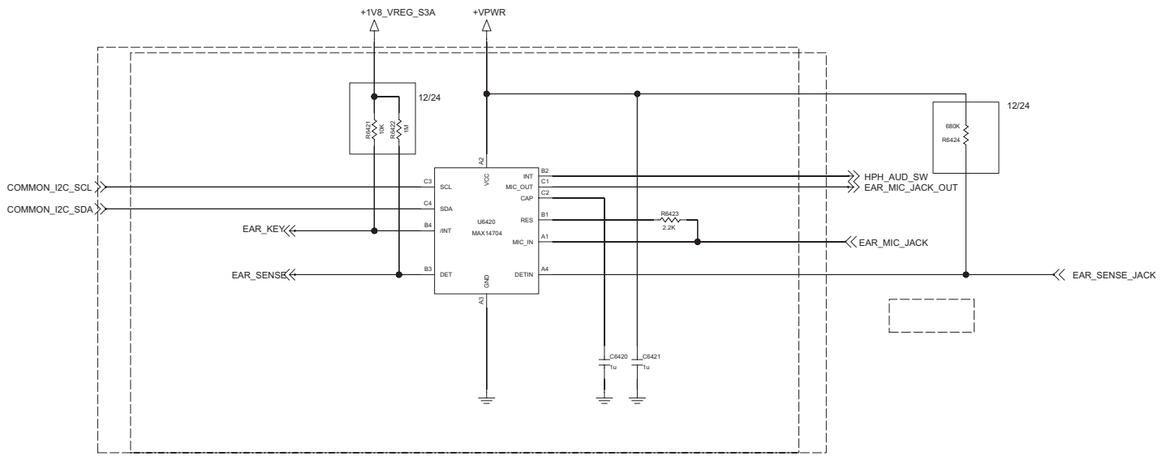

12/4

<Earjack_Debug_Port >

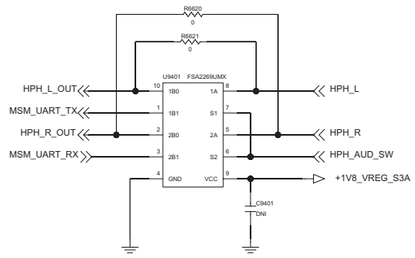

< 6-6-1_Earjack > Rev_0.5

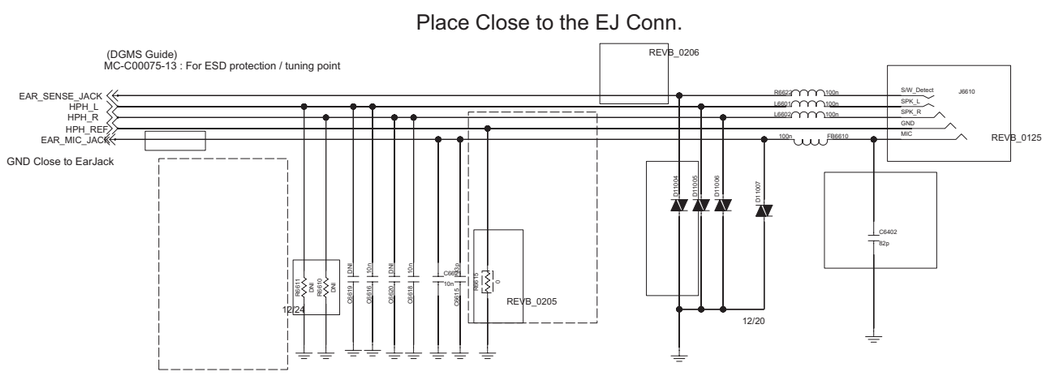

SENSOR/MOTOR/IRRC/SIM/SD/LED

I2C	Devices
Sensor0	Compass, Temp+Humid+Pressure
Sensor1	Accel+Gyro, Pressure, UV, Prox+RGB+IR Gesture

8-1-3-3_Accel_Gyro_MPU-6515

Rev_0.4

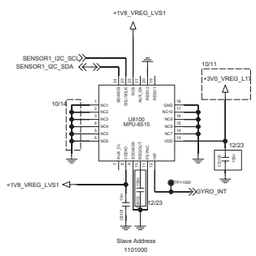

8-2-1-2_Compass_HSCDTD008A

Rev_0.3

11/13

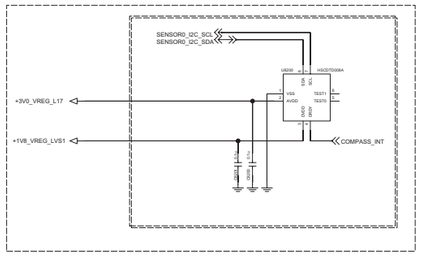

8-7-1-1_Hall IC_BU52061NVX

Rev_0.3

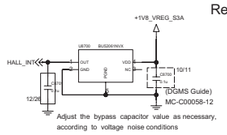

Pressure_HSPPAD038A

11/26

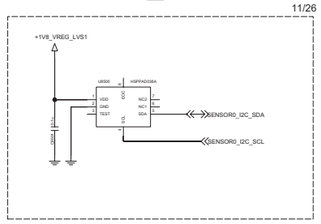

8-9-1-1_IRRC_MAXQ616V

Rev_0.4

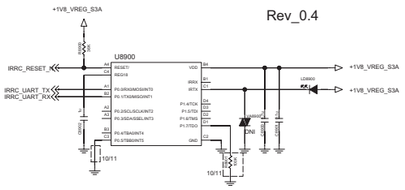

4-6-1_LED_Driver_IC_LP5521

REV.0.4

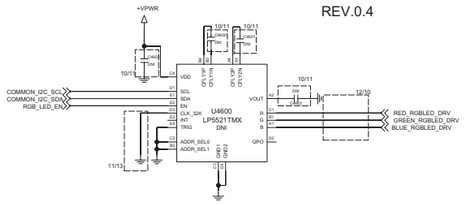

8-8-1-1_Haptic_SM100

Rev_0.3

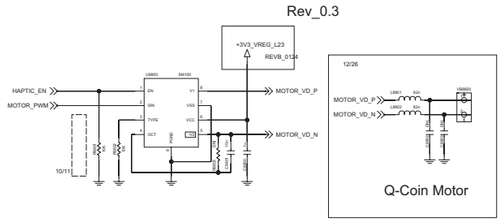

LEVEL TRANSLATOR

9-5-3_Micro_SD_Combo

Rev_0.3

Card Detect	SW VSS(T6)	SD_CARD_DET
Card Installed	—o—o—	GND
Card Not Installed	—o/—o—	1.8V

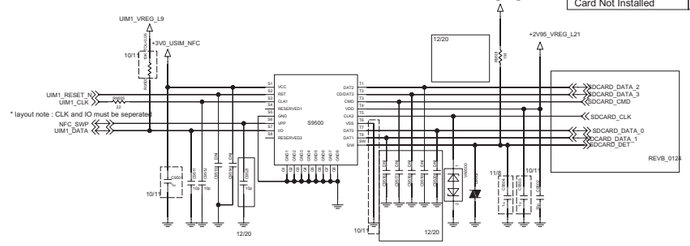

CHECK!!

WCN3680B POWER

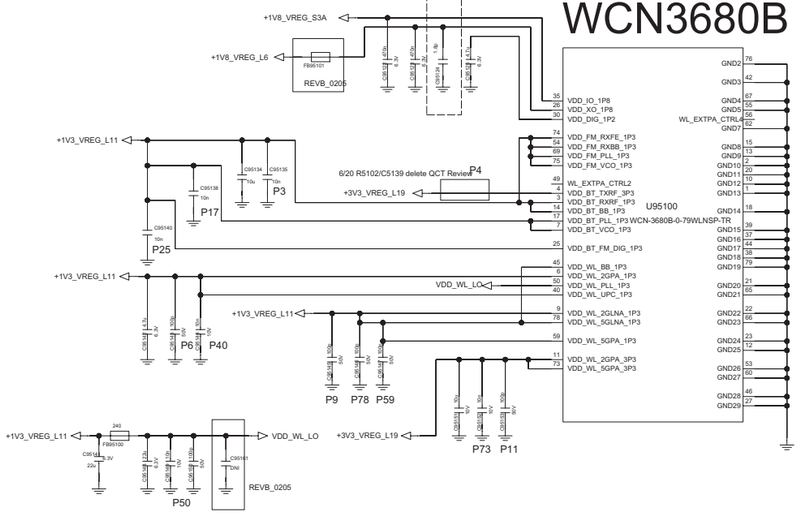

WCN3680B RF/CONTROL

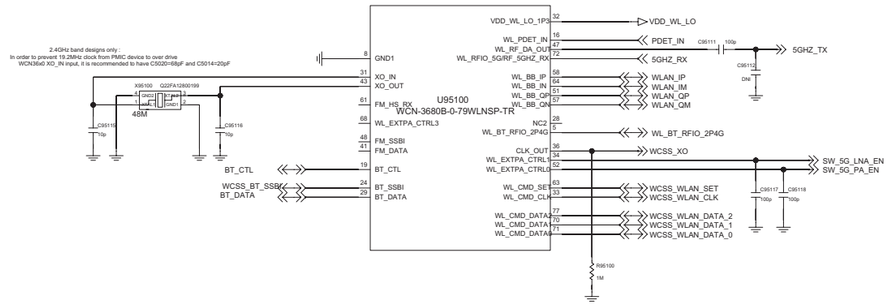

5G FEM

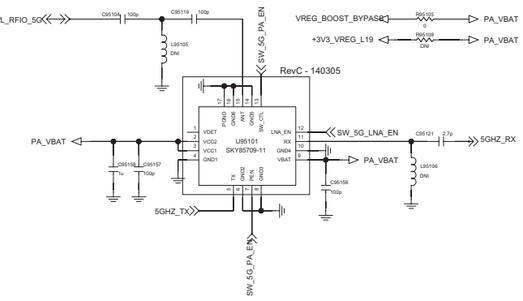

BT/WiFi RF Filter

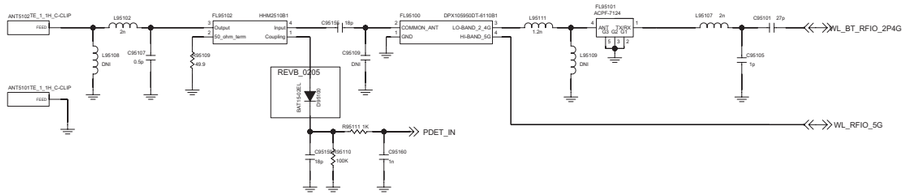

SMT Boss / Screw / Shield can frame / Clip

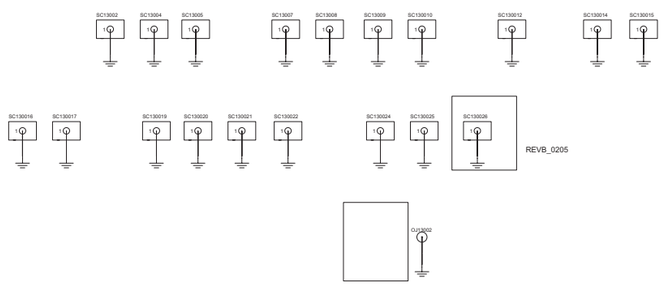

FPCB_CNT

I2C	Devices
Sensor0	Compass, Temp+Humid+Pressure
Sensor1	Accel+Gyro, Pressure, UV, Prox+RGB+IR Gesture

Upper FPCB

11/13

Deleted

Back_Key_LDAF_FPCB

12/20

12/18

12/23

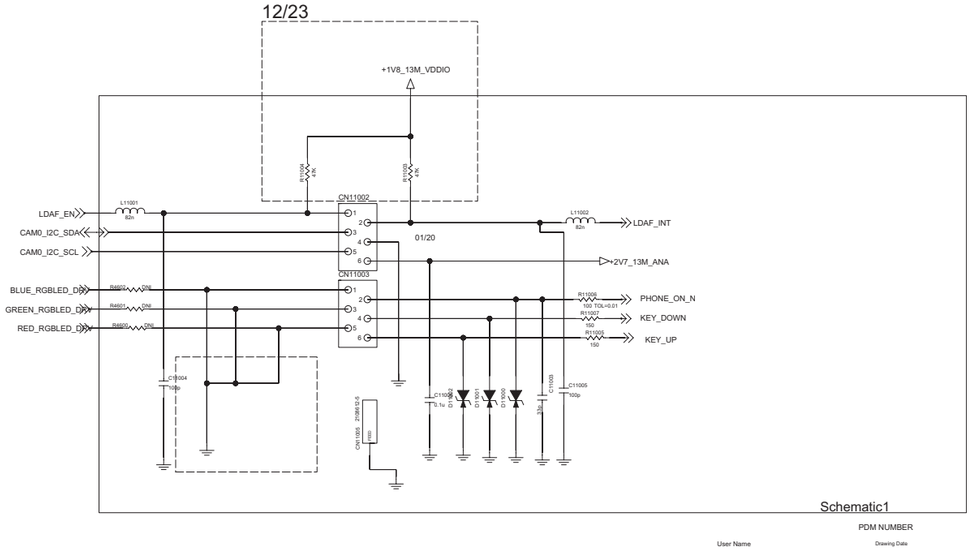

Lower FPCB

11/13

Deleted

From previously Upper FPCB to Main PCB (11/13 now)

11/26

8-4-3-3_Proximity_Ambient_APDS_9930 Rev_0.3

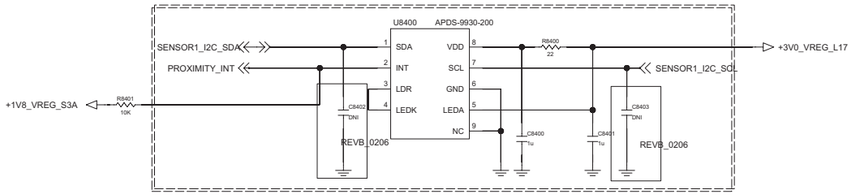

<8-10-1-1_UV_NLSX4373MUTAG> Rev_0.1

10/25

Deleted

Sub_MIC1

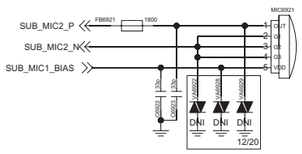

RGB LED 11/13

12/10

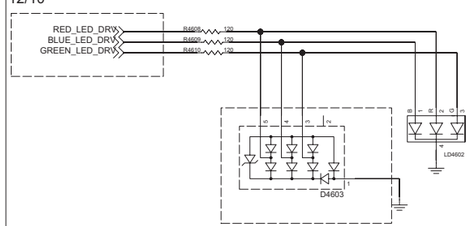

From previously Lower FPCB to Main PCB (11/13 now)

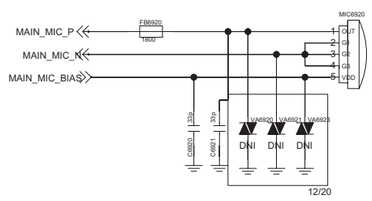

RGB LED

11/13

Deleted

Temperature

BACK_KEY_FPCB

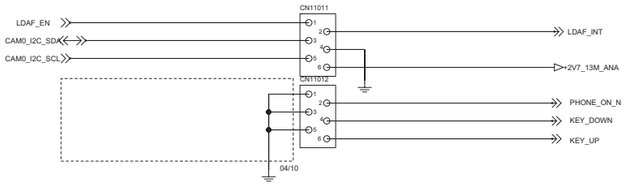

LDAF_VL6180

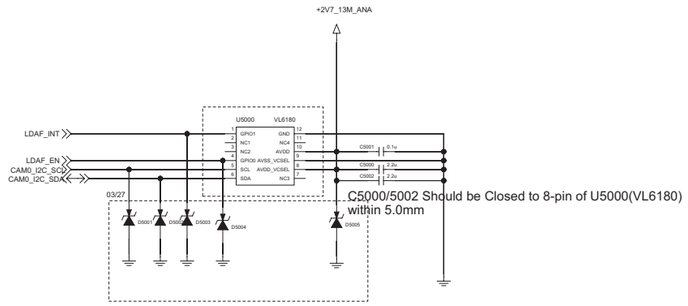

BACK_KEY

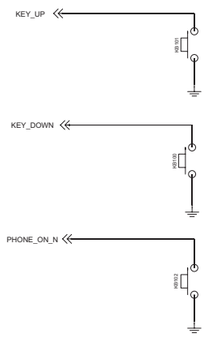

RGB_KEY_LED

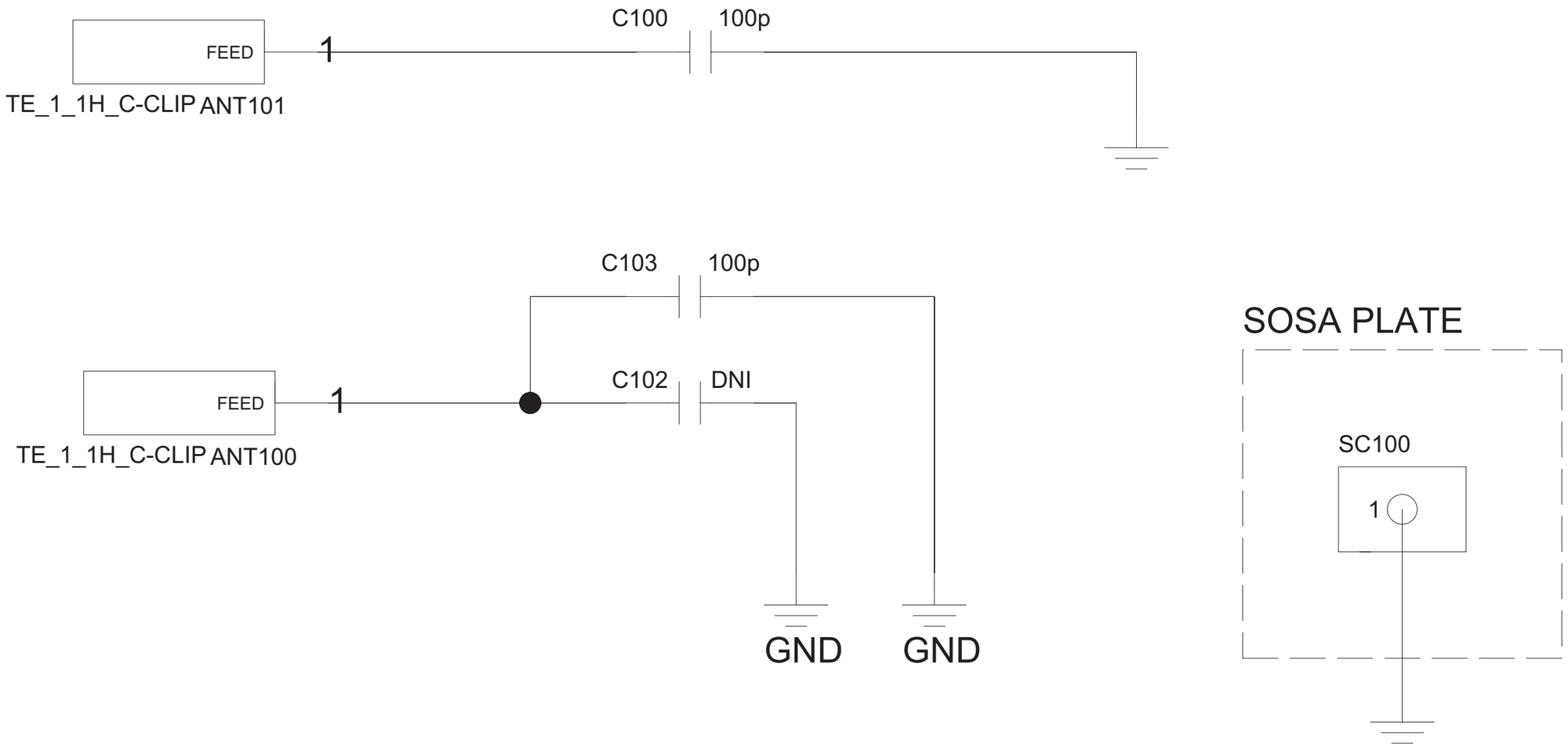

7. BGA PIN MAP

MSM8974 - Top View

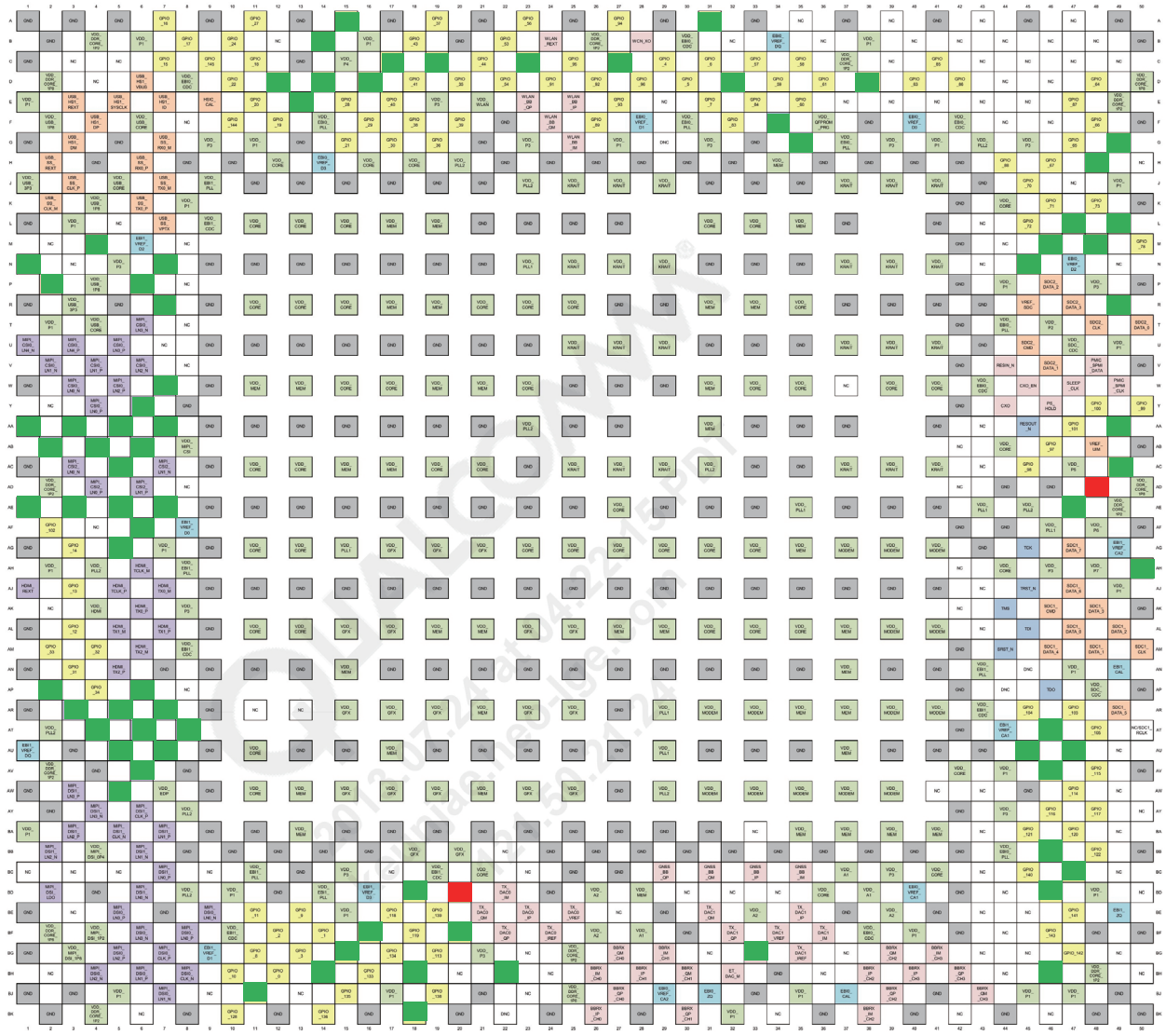

: NC pin

: Test Point

WTR1625(L) - Top View

					3 GND						6 GND		7 DRX LB4 IN		8 GND			
10 GND		11 VDD RF1 D MB				13 DRX HB3 IN		14 VDD RF1 D LB LO								18 PRX HB3 IN		19 PRX HMB4 IN
	20 DRX MB2 IN		21 GND		22 VDD RF1 D HB		23 GND				24 GND		25 VDD RF1 P HB LO		26 GND		27 PRX MB3 IN	
28 DRX MB1 IN									31 VDD RF1 D LB							34 VDD RF1 P HMB		35 GND
	36 GNSS RF INP				38 VDD RF1 D LOM		39 GND		40 GND				41 GND		42 GND		43 PRX MB2 IN	
44 GNSS RF INM		45 GND		46 GND		47 GND		48 VDD RF1 S VCO		49 GND								51 PRX MB1 IN
	52 VDD RF1 G LNA		53 GNSS BB IM		54 VDD RF2 D BB				55 GND				56 GND		57 VDD RF1 P HMB LO		58 GND	
59 VDD RF1 G BB		60 GNSS BB IP		61 DRX BB QP				62 VDD RF2 S VCO		63 GND				64 GND				65 PRX LB4 IN
	66 GND		67 GNSS BB QP		68 DRX BB QM				69 GND		70 GND		71 RTUNE		72 VDD RF1 P LB		73 PRX LB3 IN	
74 VDD RF1 G VCO		75 GND		76 DRX BB IP		77 GND		78 VDD RF1 S PLL		79 VDD RF1 P PLL		80 VDD RF2 P VCO		81 GND		82 GND		83 GND
	84 GND		85 GNSS BB QM		86 DRX BB IM		87 GND		88 GND		89 GND		90 VDD RF1 P VCO				92 PRX LB2 IN	
93 VDD RF1 G PLL		94 GND		95 SSBI PRX DRX		96 GND		97 PRX BB QM		98 VDD RF2 P BB		99 PRX BB IP		100 VDD RF2 P RX		101 GND		
	103 VDD DIO		104 GP DATA1		105 SSBI TX GNSS		106 GND		107 PRX BB QP		108 PRX BB IM				110 GND		111 GND	
112 GND		113 GND		114 VDD RF2 T PLL		115 VDD RF1 T SYN		116 VDD RF2 FBRX		117 PDET RFFB		118 GND		119 GND		120 GND		
	122 GND		123 GP DATA0		124 GND		125 GND		126 VDD RF2 T BB		127 DAC REF		128 GND		129 VDD RF2 T DA		130 TX HB1 OUT	
131 XO IN		132 GND		133 GND				134 GND		135 VDD RF1 T LO		136 VDD RF1 T UPC		137 VDD RF1 T DA		138 TX MB2 OUT		139 TX MB3 OUT
	140 GND						142 GND		143 GND				144 GND		145 GND		146 TX MB1 OUT	
147 VDD RF2 XO		148 GND		149 VDD RF1 T VCO				150 GND		151 TX BB IP		152 TX BB QP		153 TX LB2 OUT		154 TX LB4 OUT		
	156 GND		157 VDD RF2 T VCO		158 GND		159 GND		160 TX BB IM		161 TX BB QM		162 TX LB1 OUT				164 GND	

: NC pin

: Test Point

WTR1625 - Top View

: NC pin

: Test Point

PM8941 - Top View

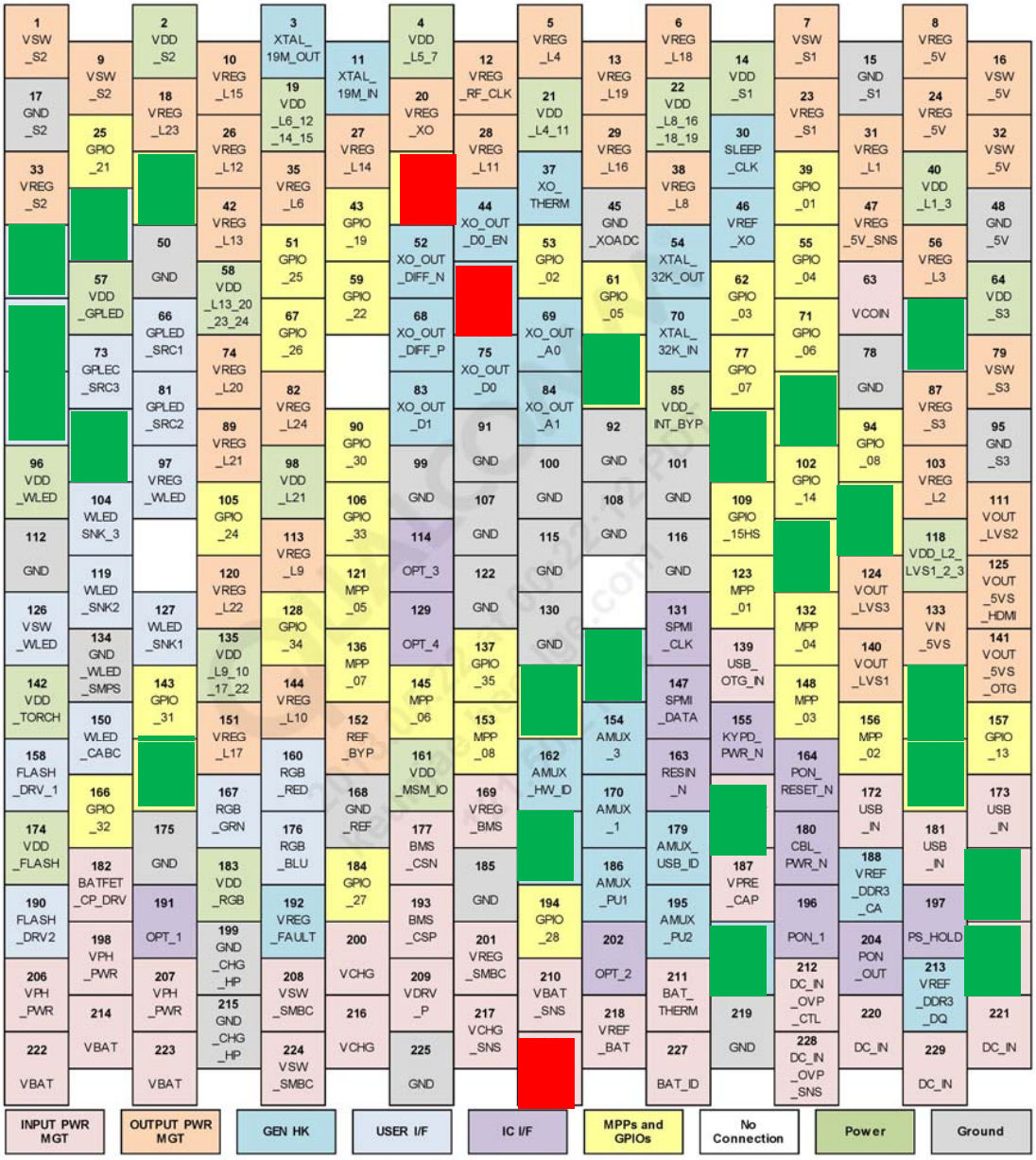

: NC pin

: Test Point

PM8841 - Top View

1 VDD _S5	2 VDD _S5	3 VSW _S5	4 VREG _S5	5 VREG _S6	6 VREG _S2	7 VSW _S2	8 VDD _S2	9 VDD _S2
10 GND _S5	11 VSW _S5	12 VSW _S5	13 GND	14 GND	15 GND	16 VSW _S2	17 VSW _S2	18 GND _S2
19 VDD _S6	20 GND _S5	21 GND	22 GND	23 GND	24 GND _REF		25 GND _S2	26 GND
27 VSW _S6	28 VSW _S6	29 GND	30 GND	31 REF _BYP	32 VDD_ MSM_IO	33 MPP _01	34 MPP _02	35 GND S1
36 GND _S6	37 GND _S6	38 GND	39 GND	40 GND	41 VDD_ INT_BYP	42 VREG _S1		44 VSW _S1
45 GND	46 GND	47 REMOTE_ GND_SNS	48 GND	49 GND	50 VDD _PON	51 OPT_2	52 OPT_1	53 VDD _S1
54 GND _S7	55 GND _S7	56 GND	57 GND	58 GND		60 VREG _S3	61 PON_1	62 GND _S3
63 VSW _S7	64 VSW _S7	65 GND	66 GND	67 GND	68 PS_ HOLD	69 RESIN _N		71 VSW _S3
72 VDD _S7	73 GND _S8	74 GND	75 GND	76 SPMI _DATA	77 SPMI _CLK		79 GND _S4	80 VDD _S3
81 GND _S8	82 VSW _S8	83 VSW _S8	84 GND	85 GND		87 VSW _S4	88 VSW _S4	89 GND _S4
90 VDD _S8	91 VDD _S8	92 VSW _S8	93 VREG _S8	94 VREG _S7	95 VREG _S4	96 VSW _S4	97 VDD _S4	98 VDD _S4

OUTPUT PWR MGT	IC I/F	MPPs and GPIOs	No Connection	Power	Ground

: NC pin

: Test Point

eMMC(THGBMBG8D4KBAIR(32GB) - Top View

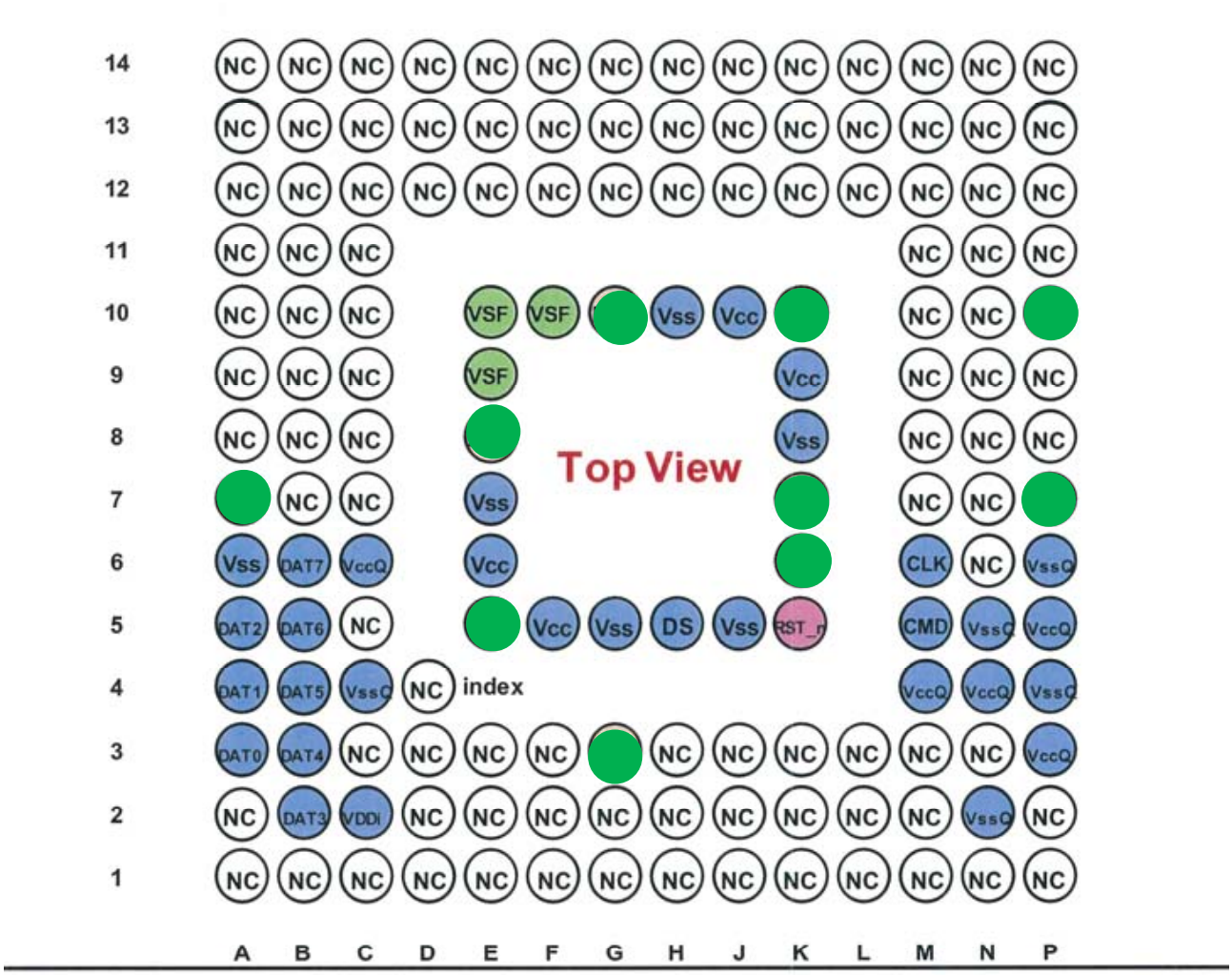

: NC pin

: Test Point

8. PCB LAYOUT

: Search parts by part number may not work on this layout. 477-478 page to search parts.

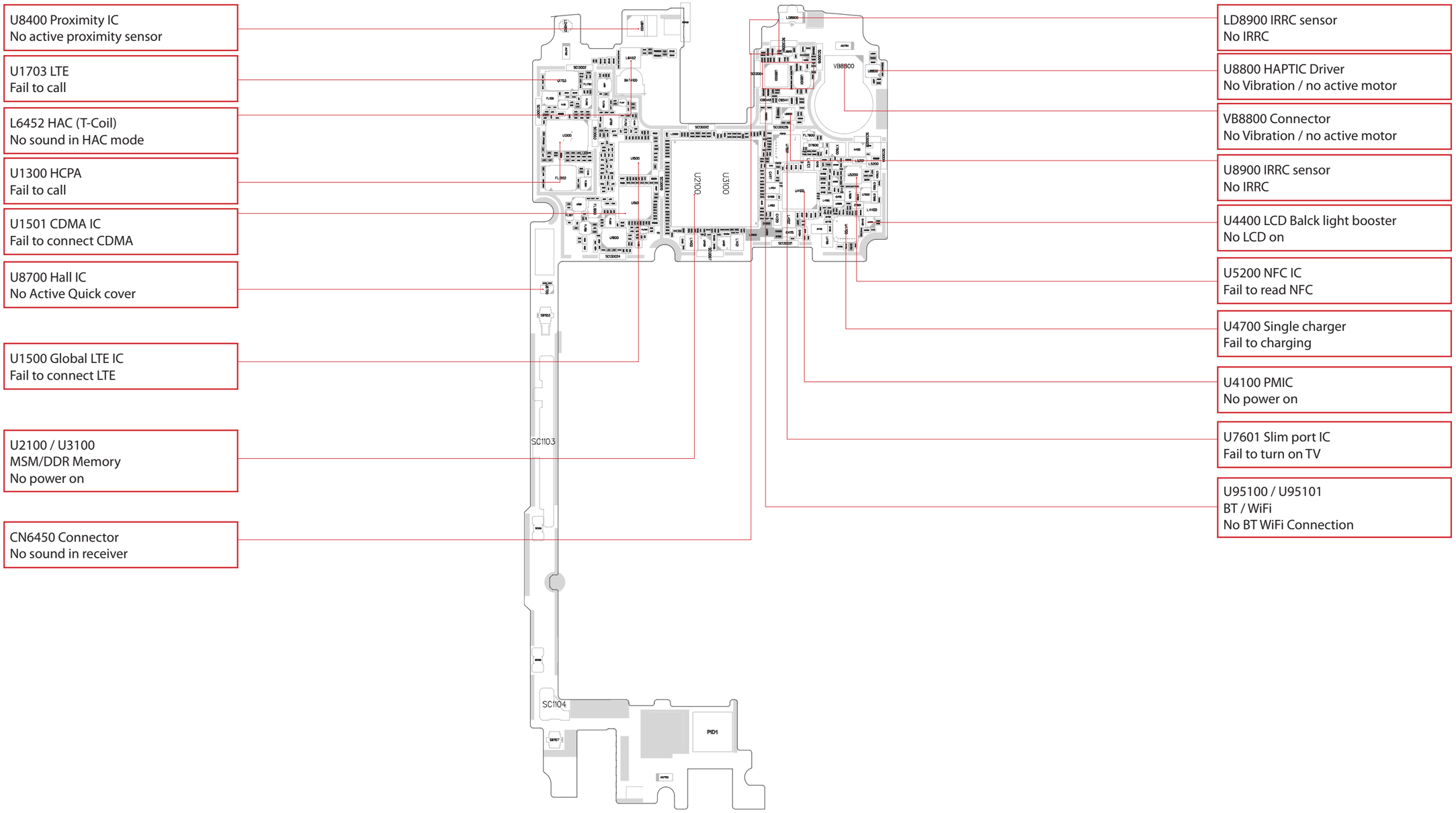

LG-AS985_MAIN_EAX65667501_1.0_TOP

U6400 RGB LED
No Active RGB LED

U8500 Pressure
No barometer

CN7900 Connector
No Main CAM

U4200 PMIC_PM8841
No power on

U3200 eMMC
NO power on
Fail to save data at phone

CN9100 Connector
NO power on

U4750 / U4751
Wireless Charger
No charging in wireless charger mode
No OTP

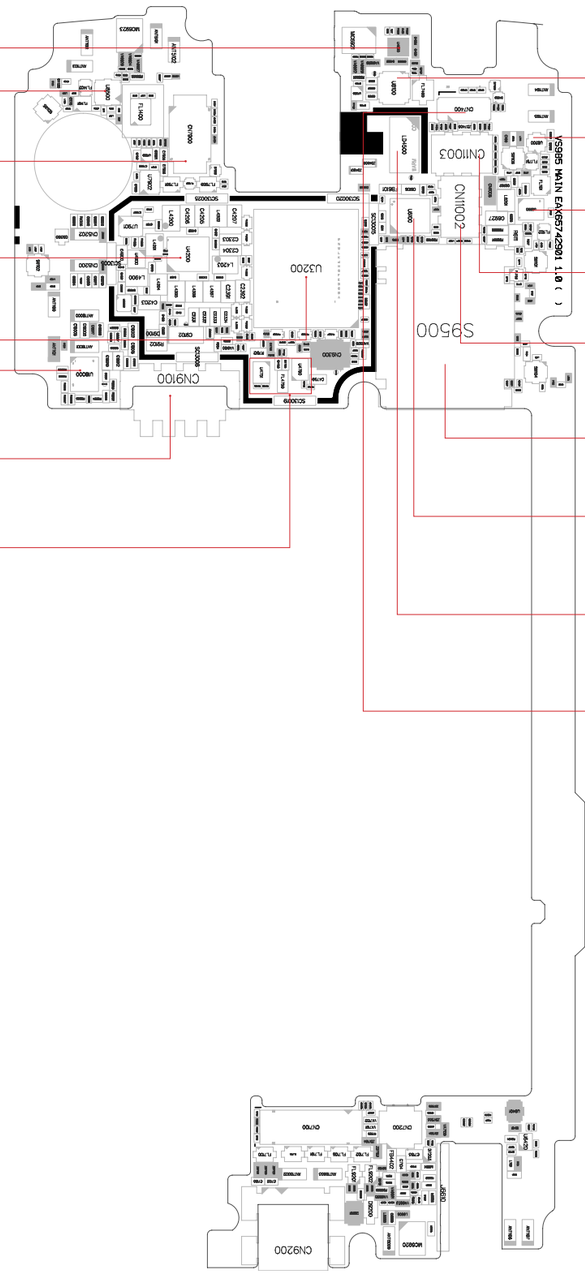

U8100 GYRO
No Active GYRO Motion

U8200 Compass
Fail to recognize rotation phone

U6200 SPK boost AMP
No work speaker

CN11003 Connector
Fail to control volume and Power On

CN11002 Connector
No Active LDAF

S9500 Micro SD Combo
Fail to reading SIM and SDcard

U6100 Audio Codec
No sound input and output

LD4500 Flash LED
No Flash

CN7400 Connector
No Active VT CAM

LG-AS985_MAIN_EAX65667501_1.0_BOT

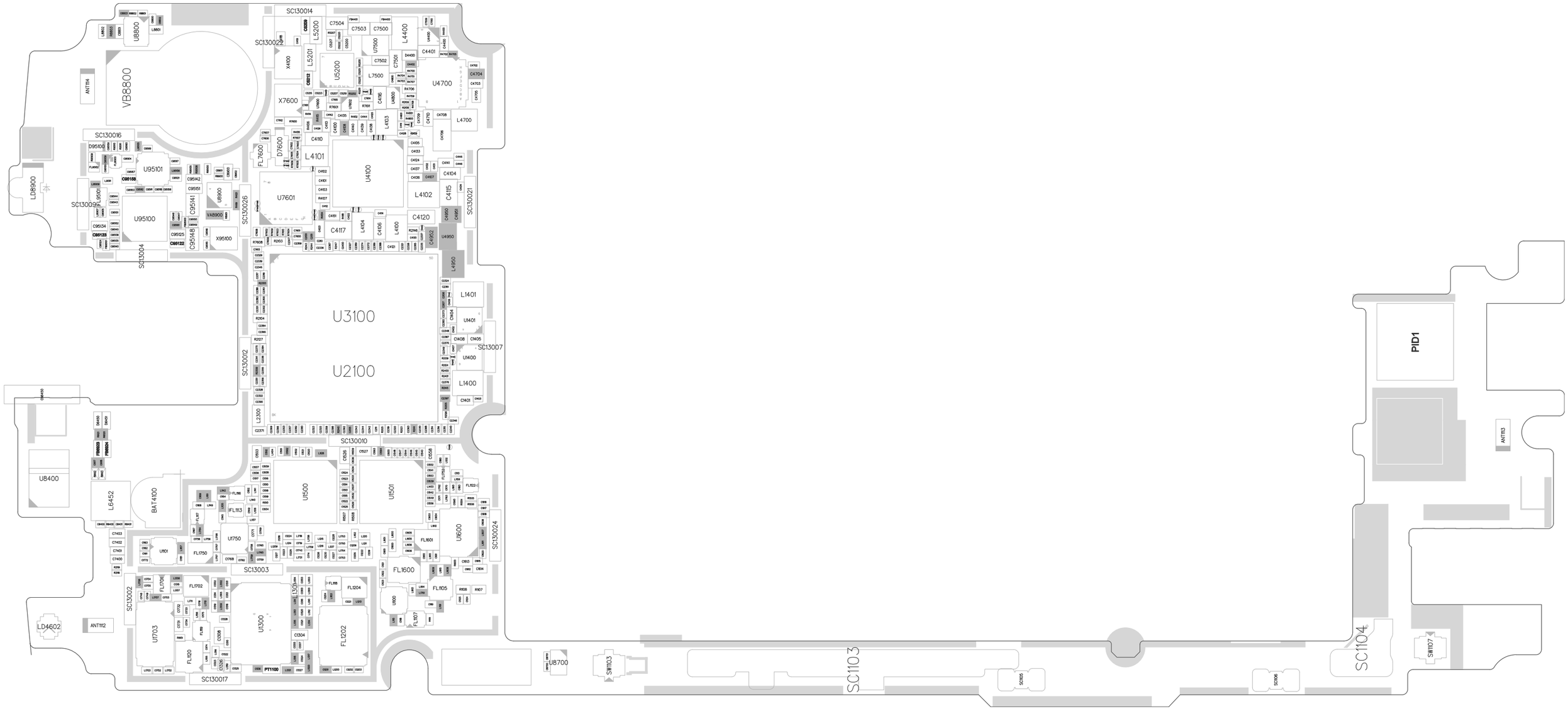

LG-AS985_MAIN_EAX65667501_1.0_TOP

LG-AS985_MAIN_EAX65667501_1.0_TOP

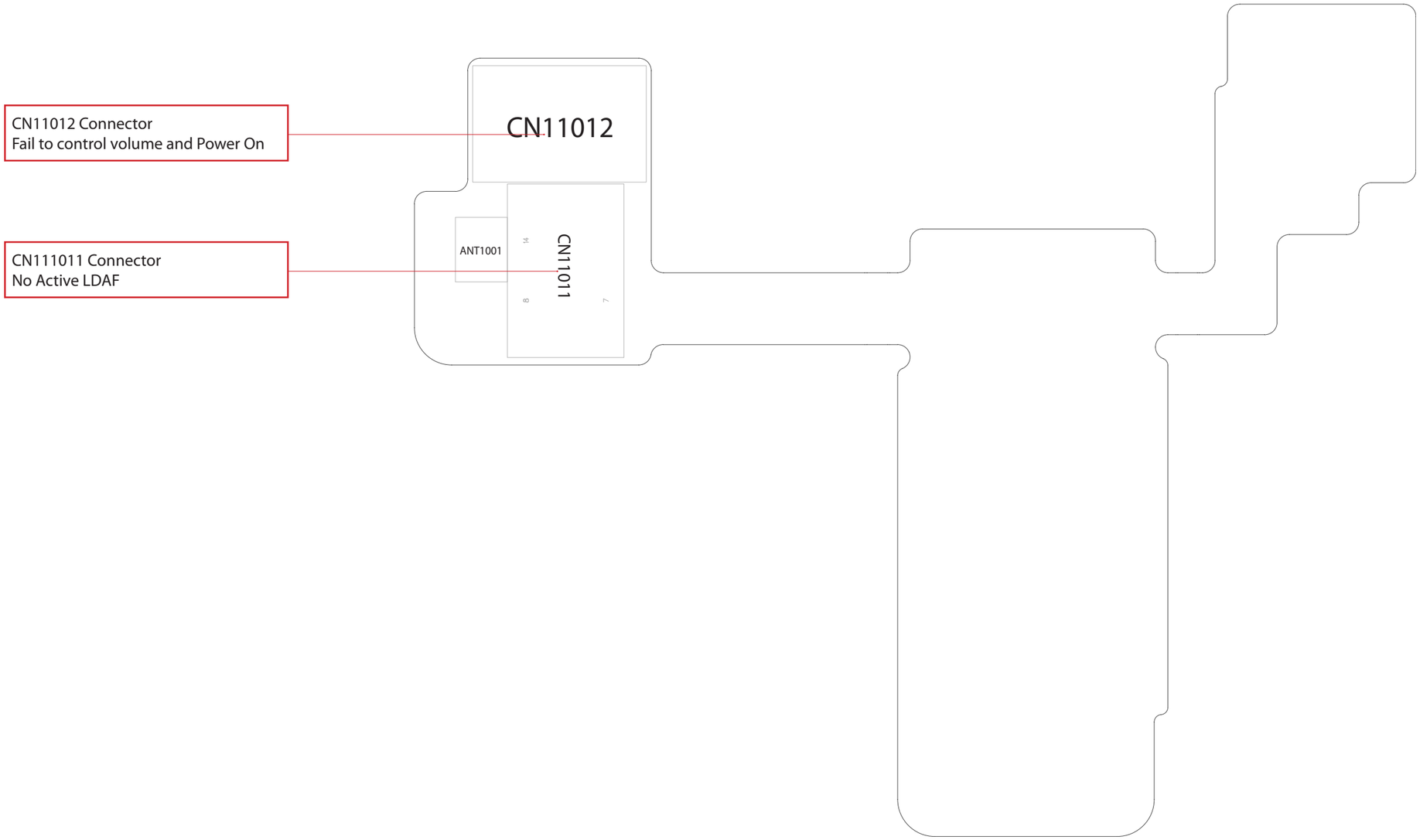

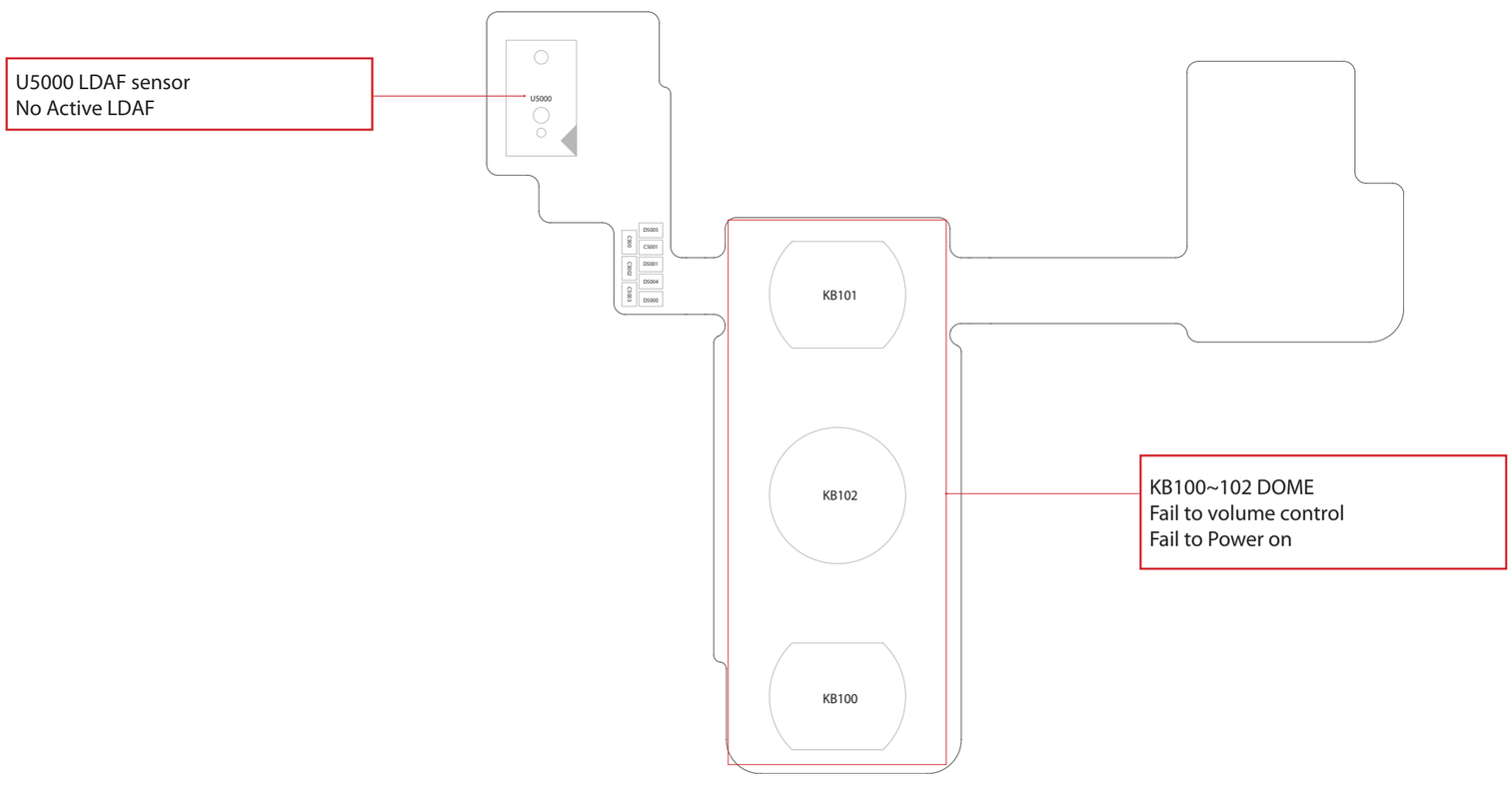

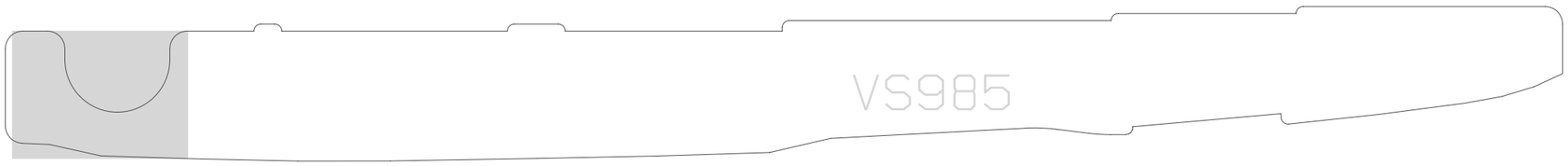

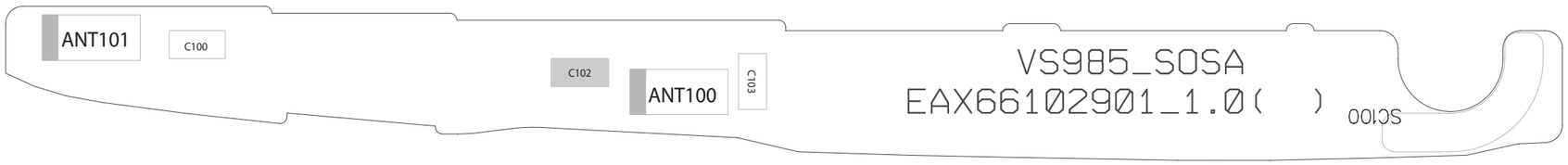

9. CALIBRATION

CAL INFORMATION		
S/W VERSION		
[TachyonV48] LGAS985 20140830 ALL File Calibration		
Please Check the Version to "B2B"		
H/W		
	Name	Part No.
PIF	PIF200(All Type)	BJAY0024021
USB Cable	USB Cable	RAD32247898
Power Cable	DC Power Cable	RAD32247878
I/O Cable	5P E-SATA_DC_Plug	RAD32167861
RF Cable_Main	MXFJK1WT4000C2	MXFJK1WT4000C2
Power Supply_PIF	Power Supply 5.3V	
Power Supply_Phone	Power Supply 5.0V	
RF Test Equipment	E5515C(8960)	
NOTICE	1. Use the Battery (Refer to Attached ppt) 1) Phone states: Power off 2) If do not use the battery, TX fails. 2. Port Setting (Refer to Attached ppt) 1) Uart Port1 : Use the "LGE Mobile USB Serial Port"	

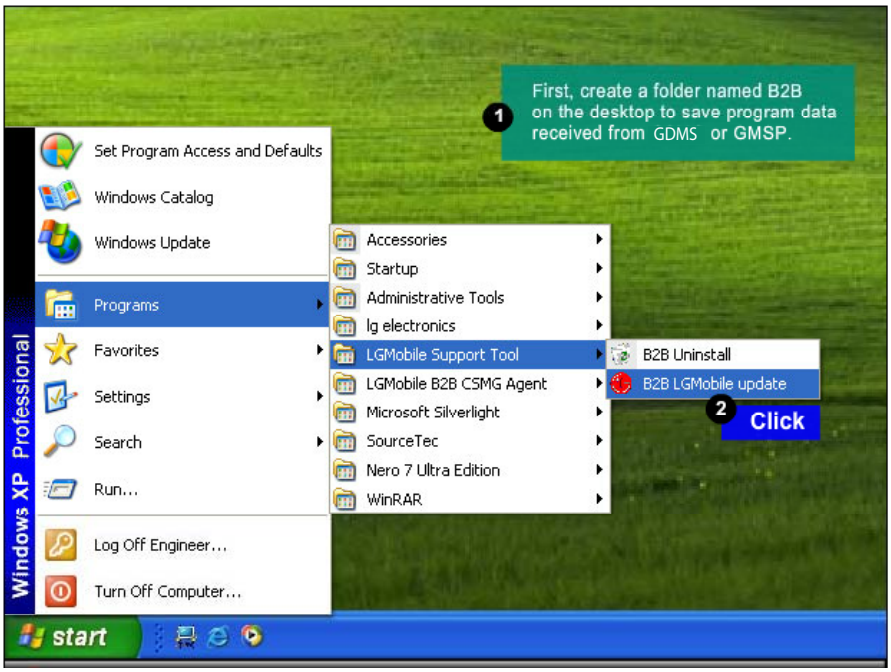

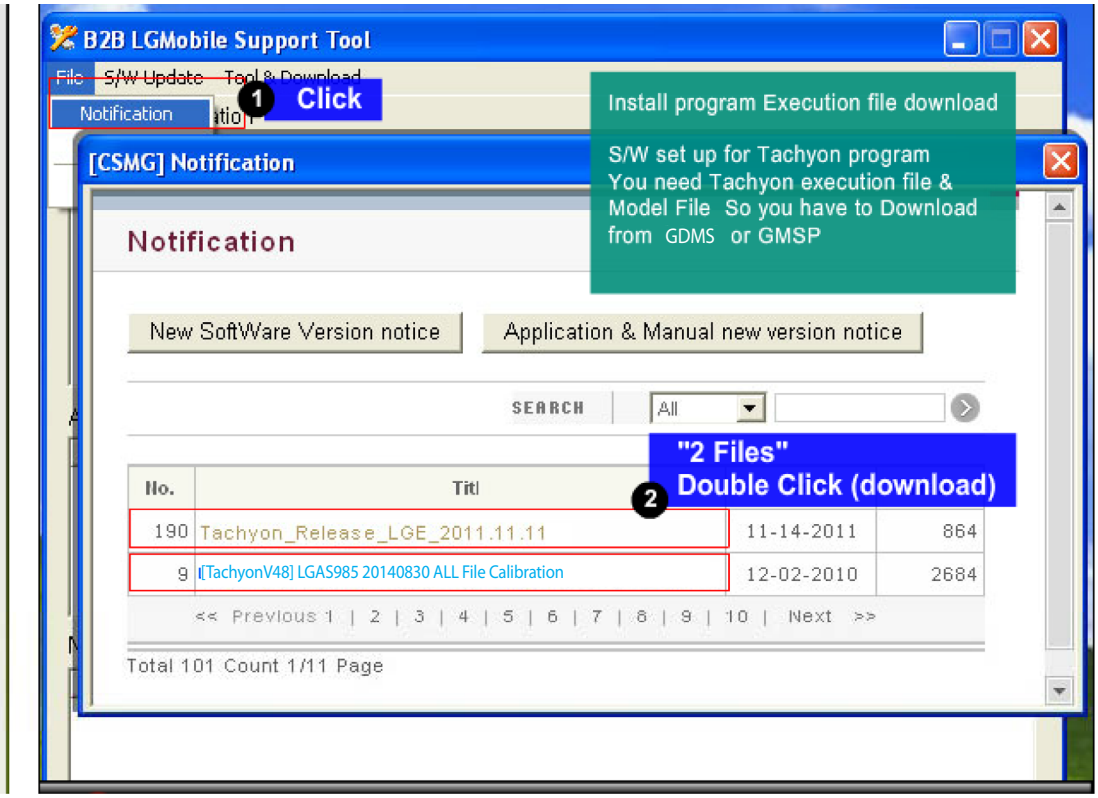

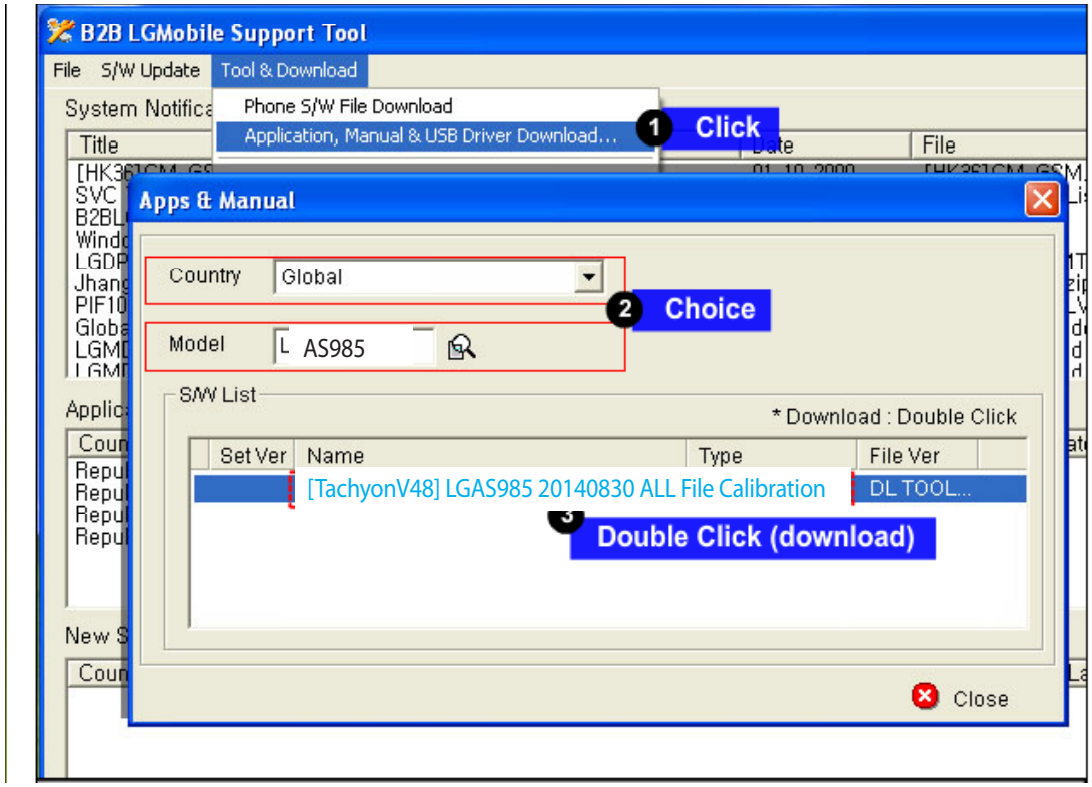

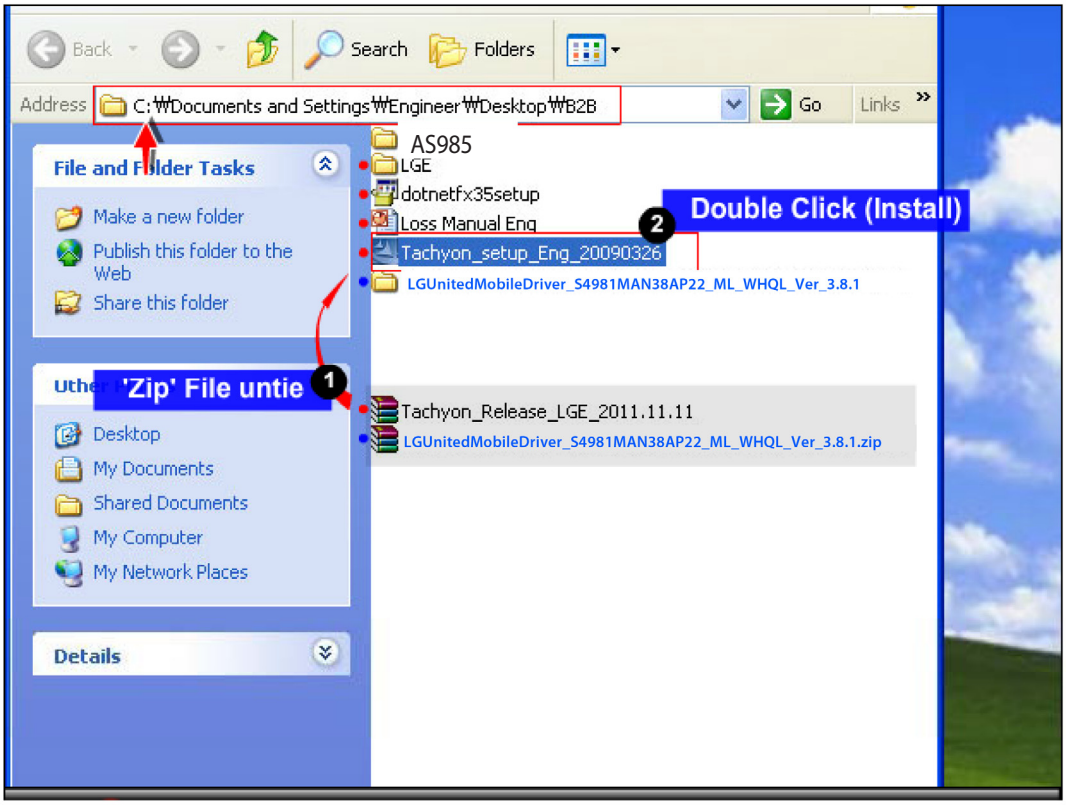

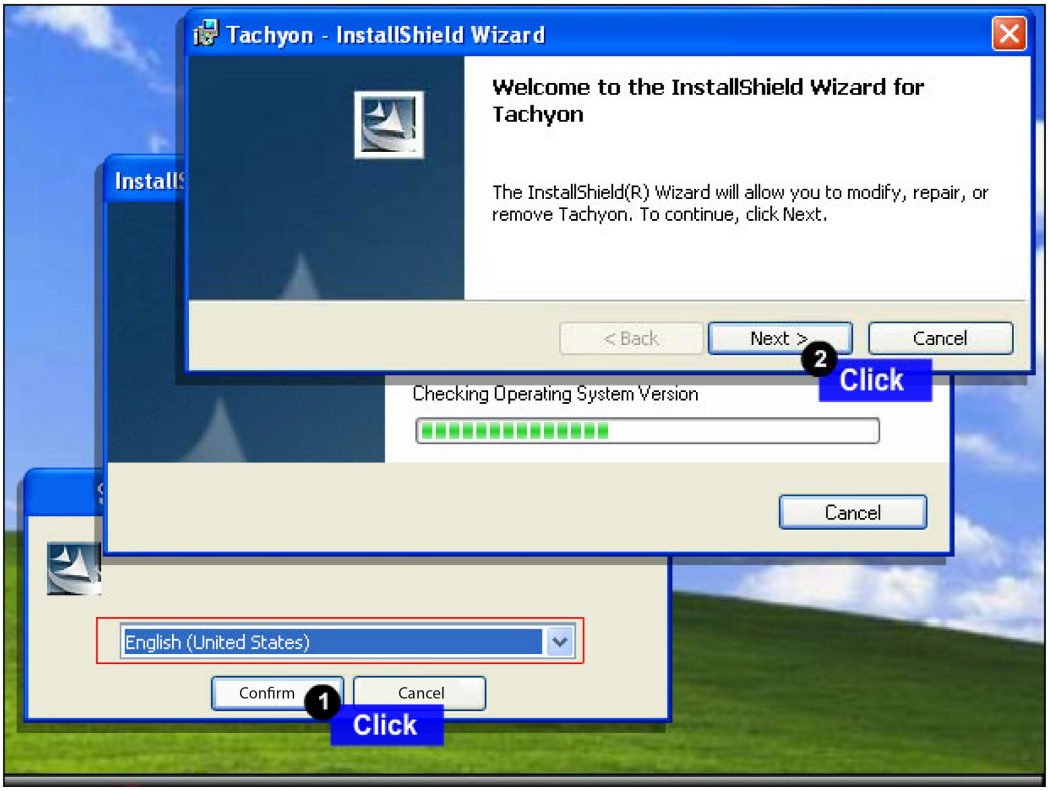

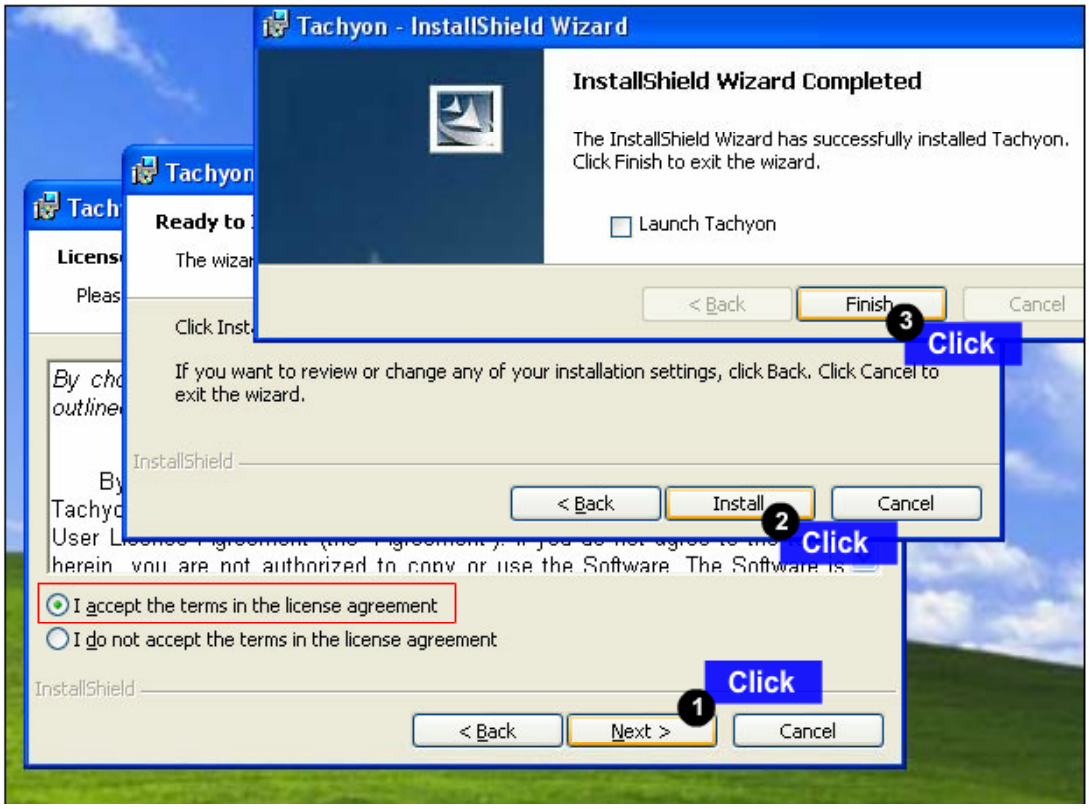

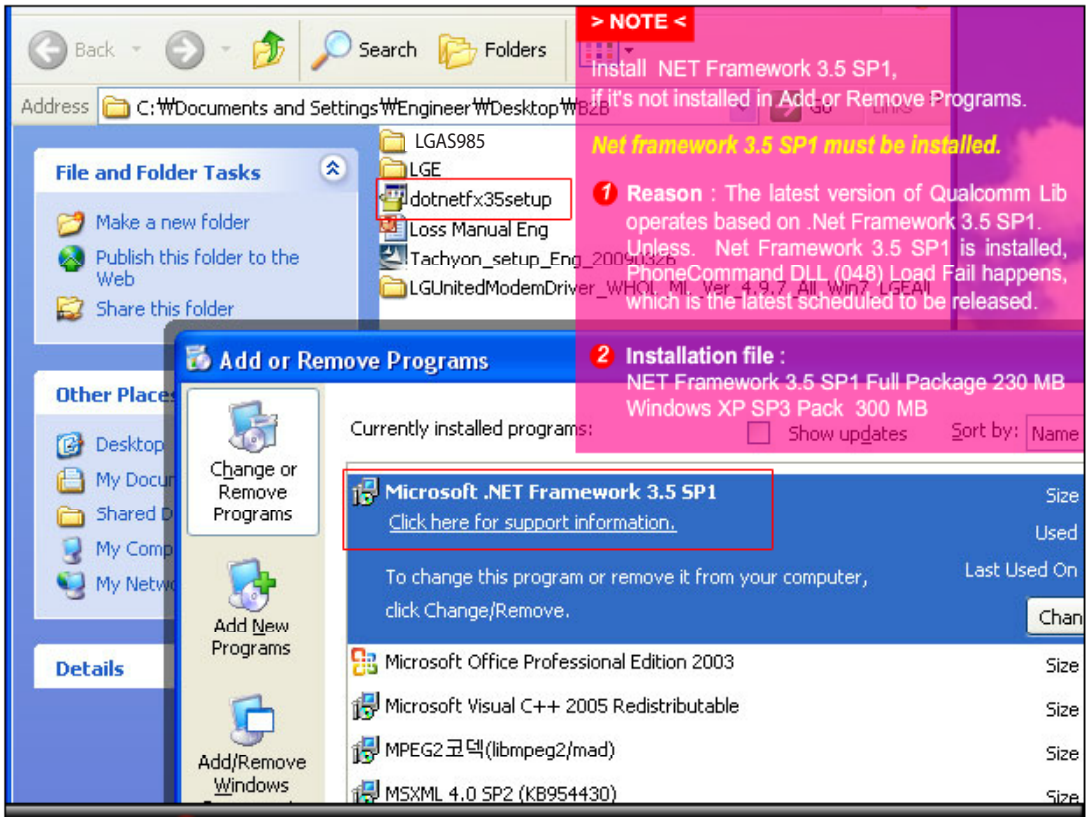

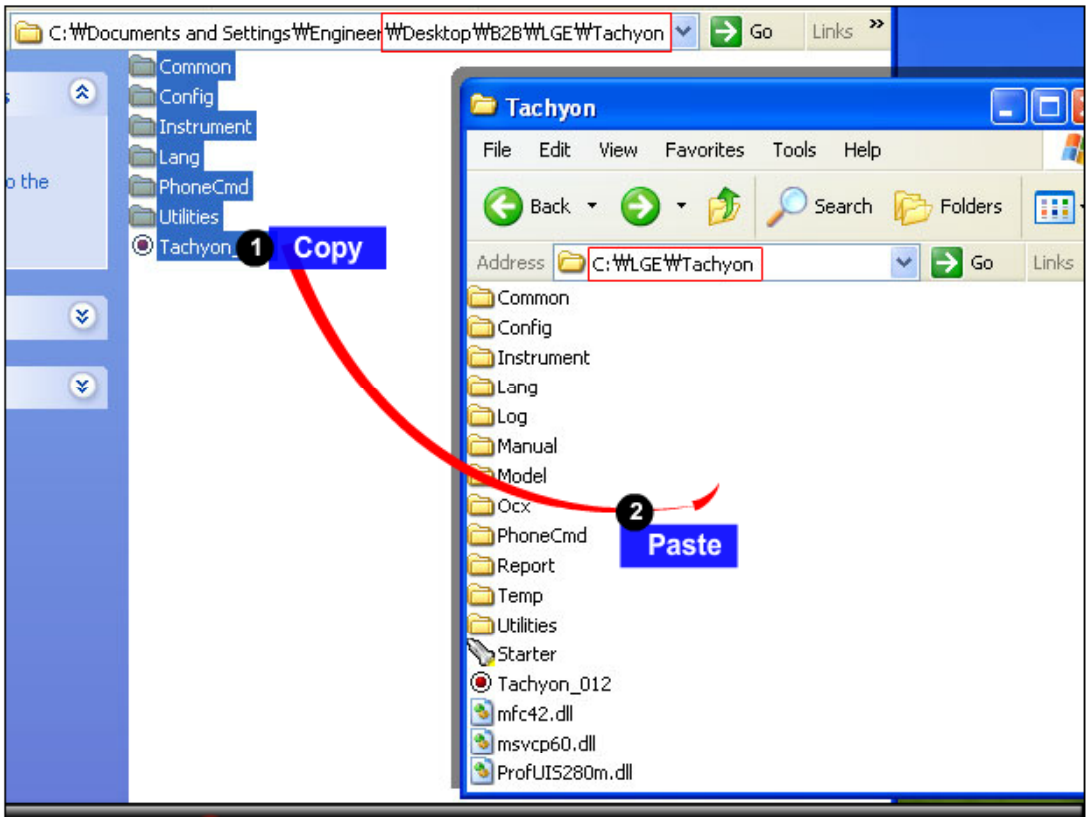

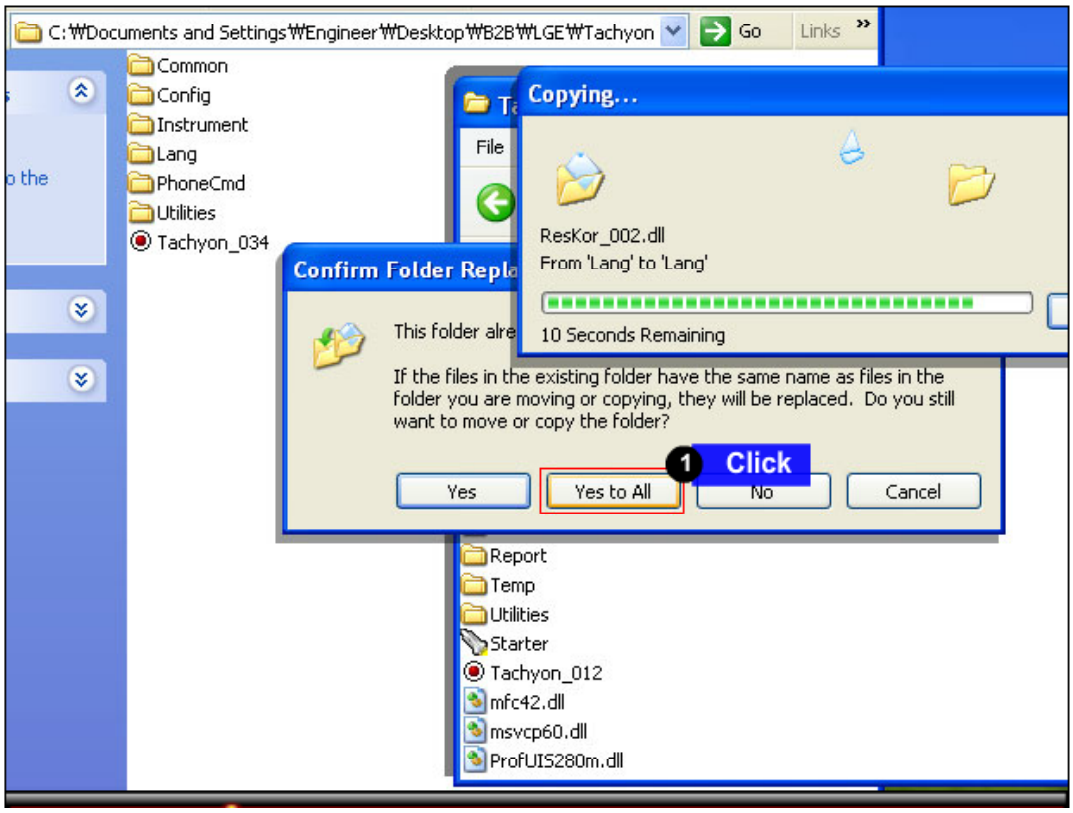

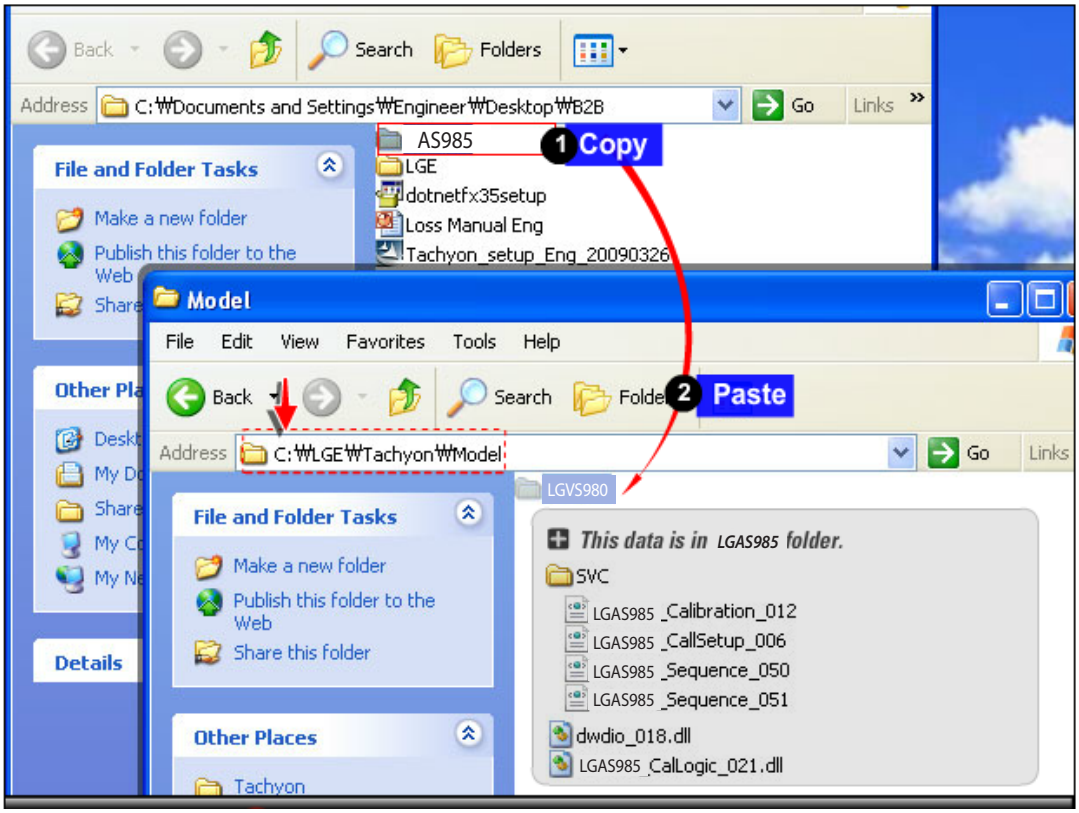

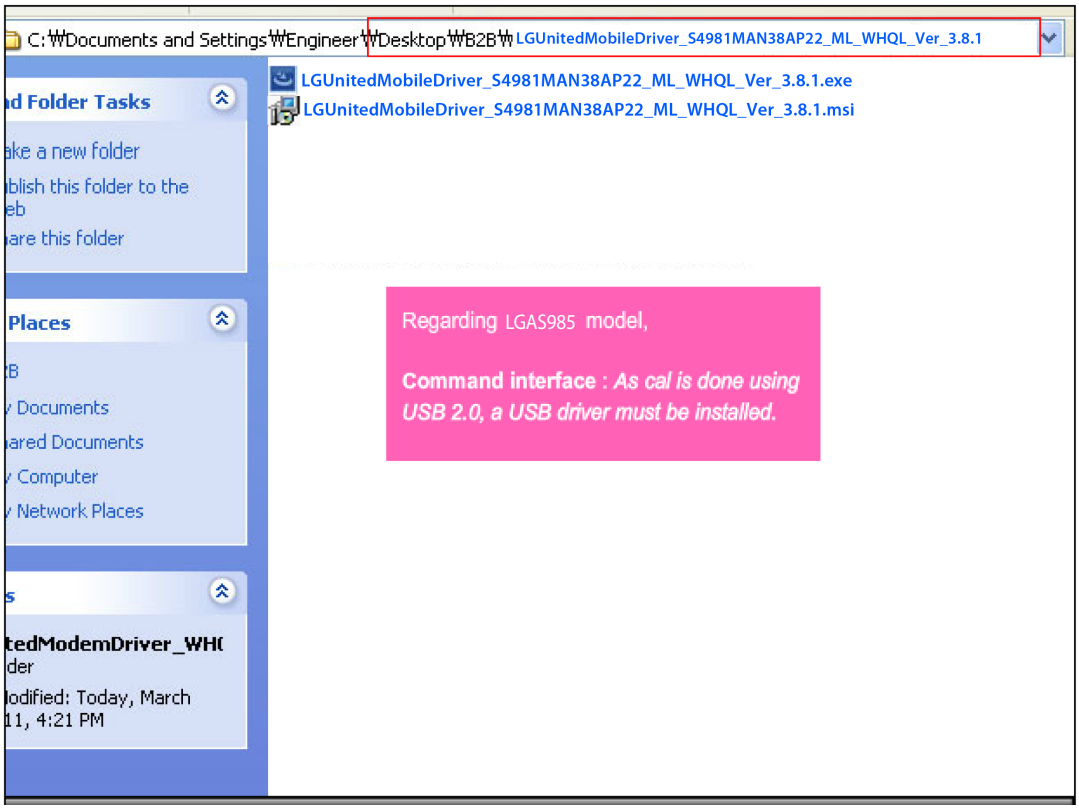

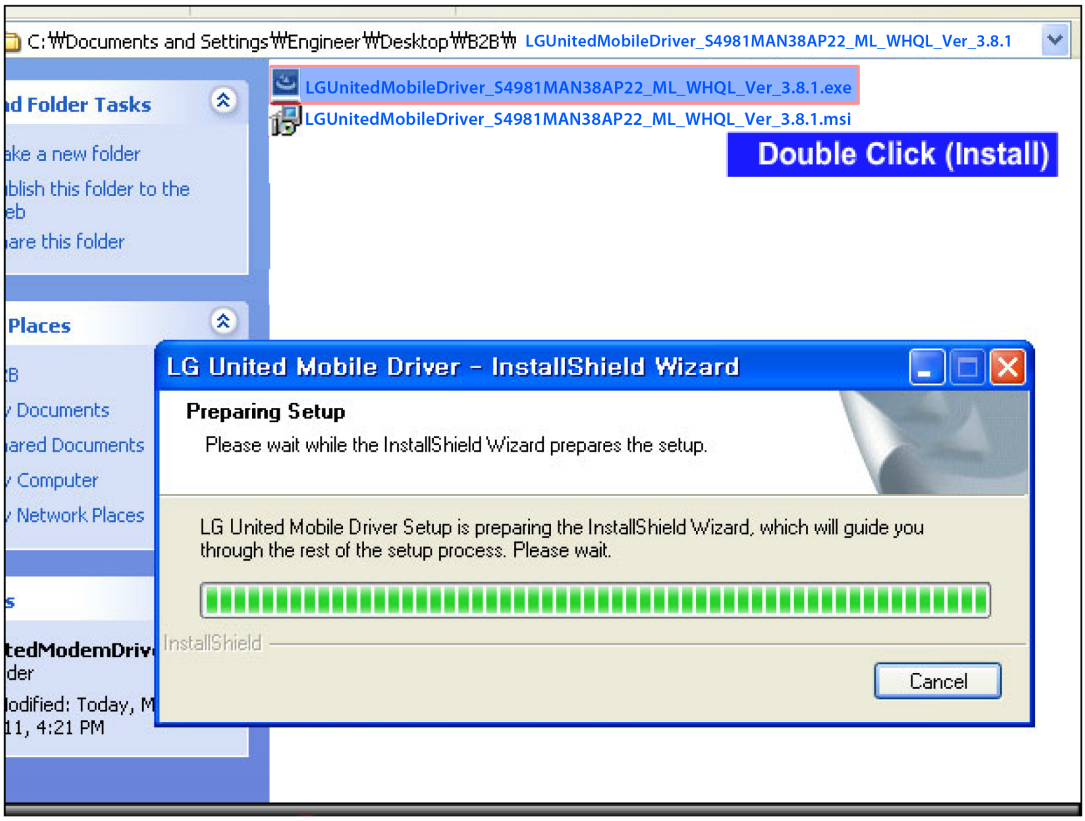

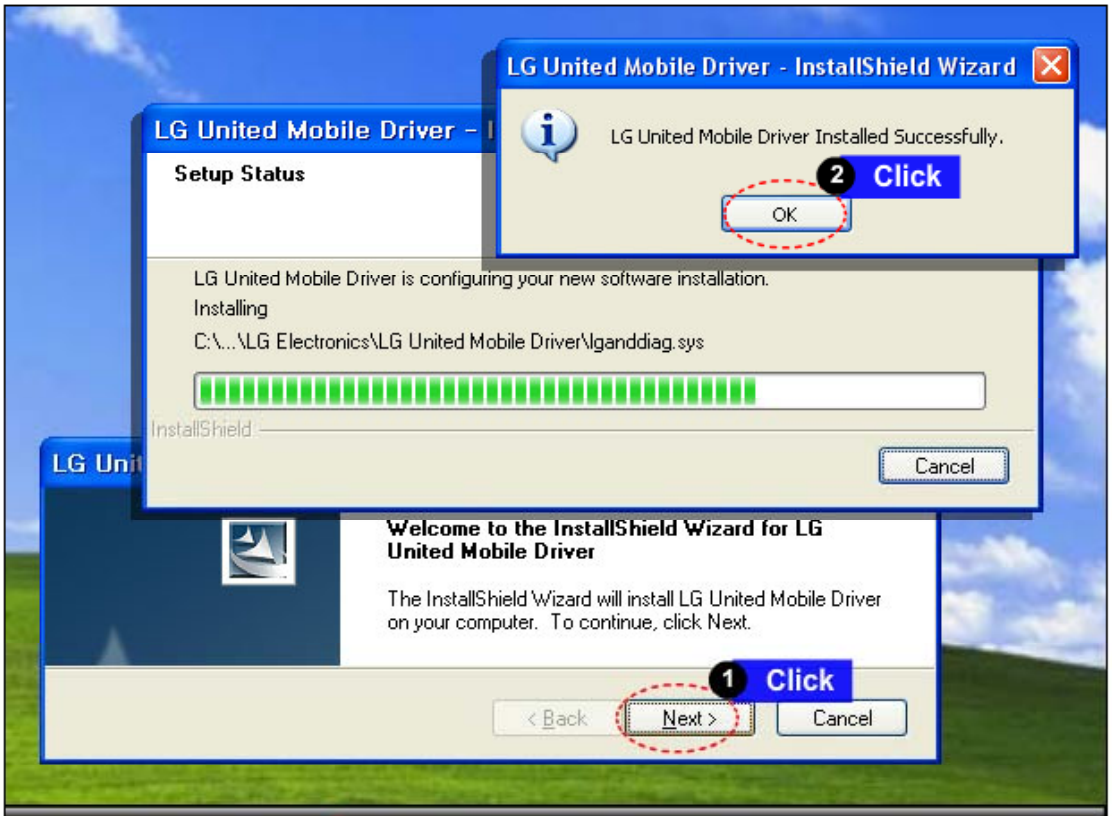

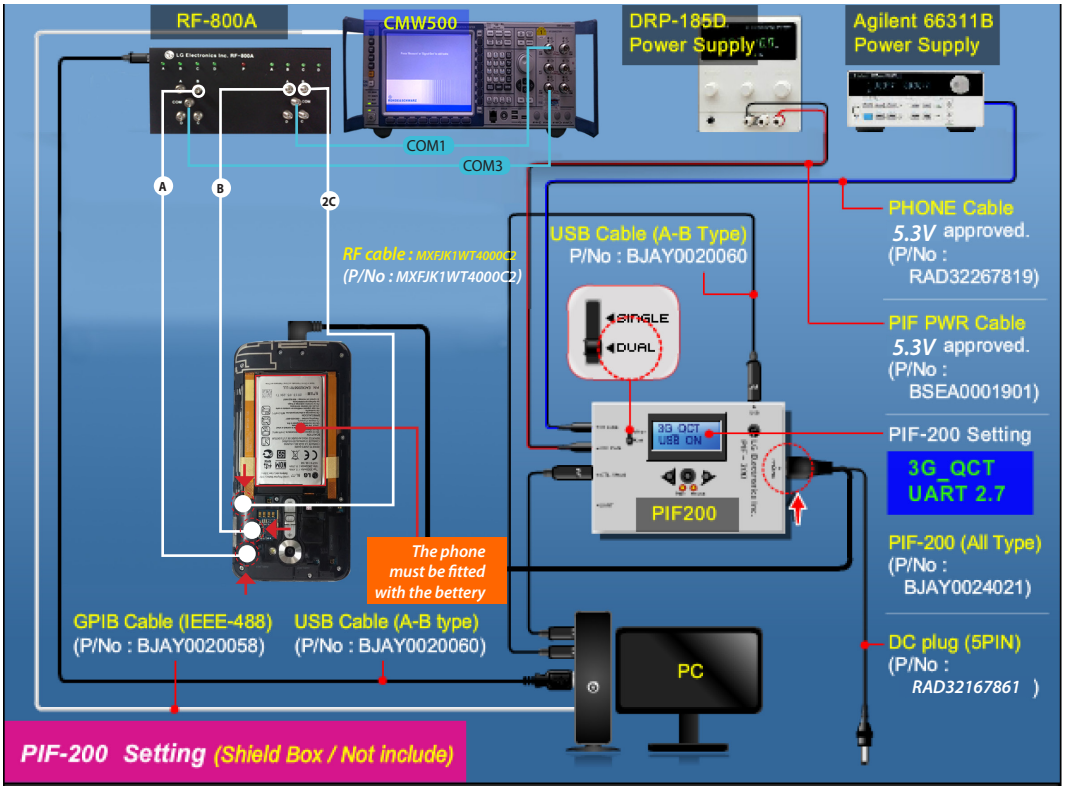

This is for example.
You can check "C:₩LGE₩Tachyon₩Model₩AS985₩Setting Guide"

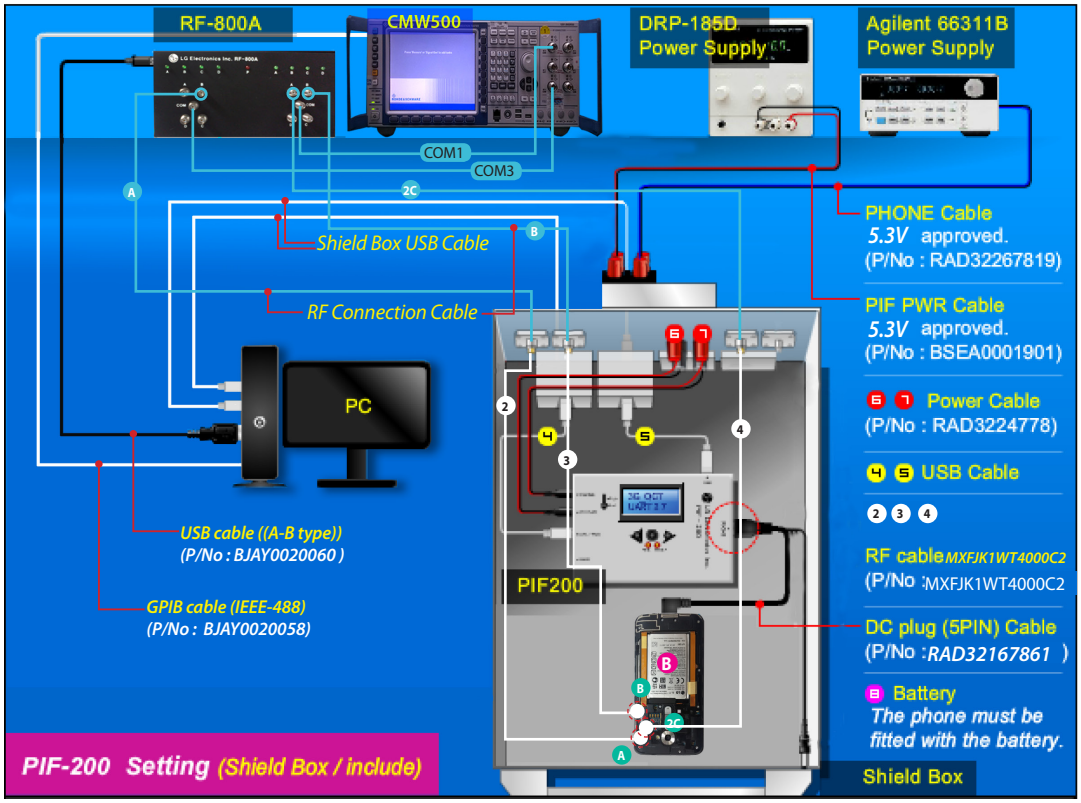

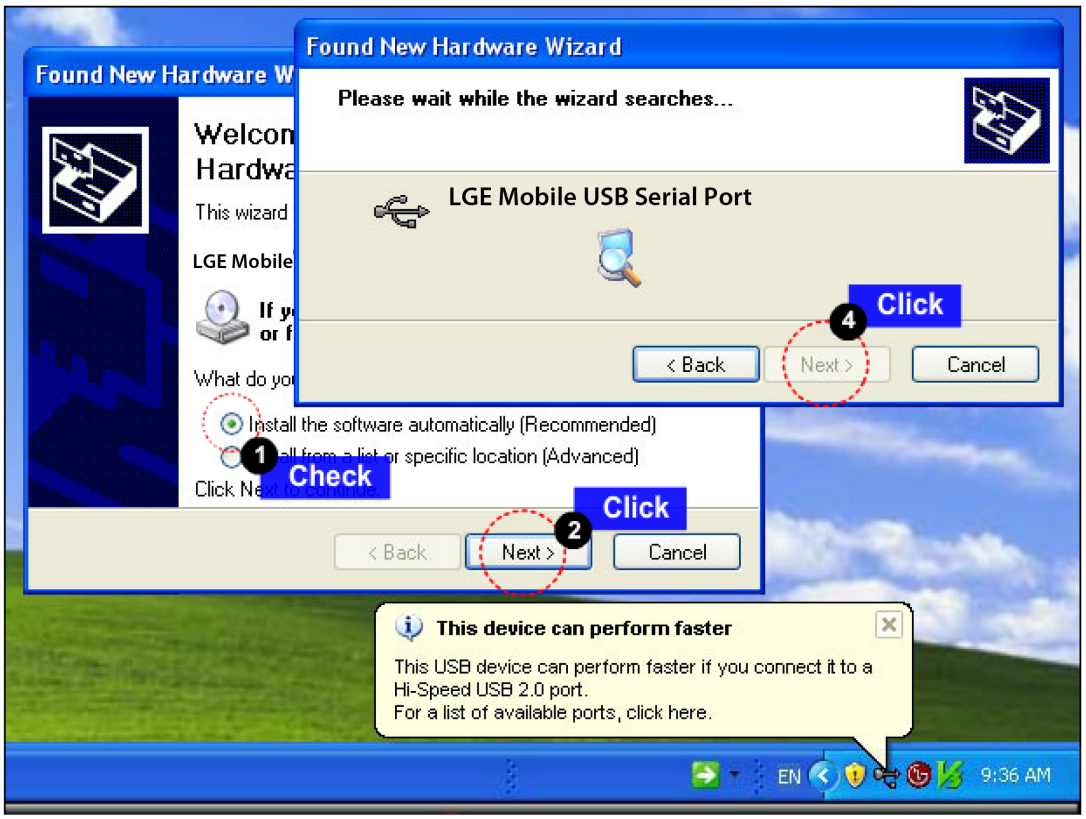

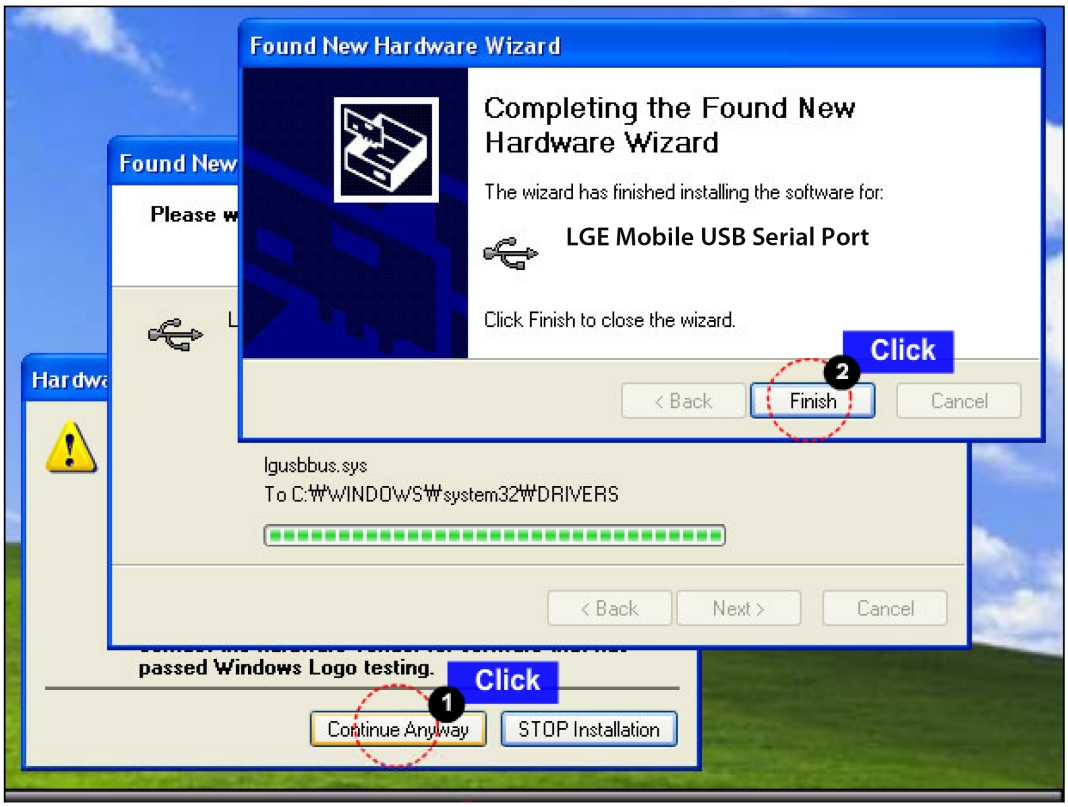

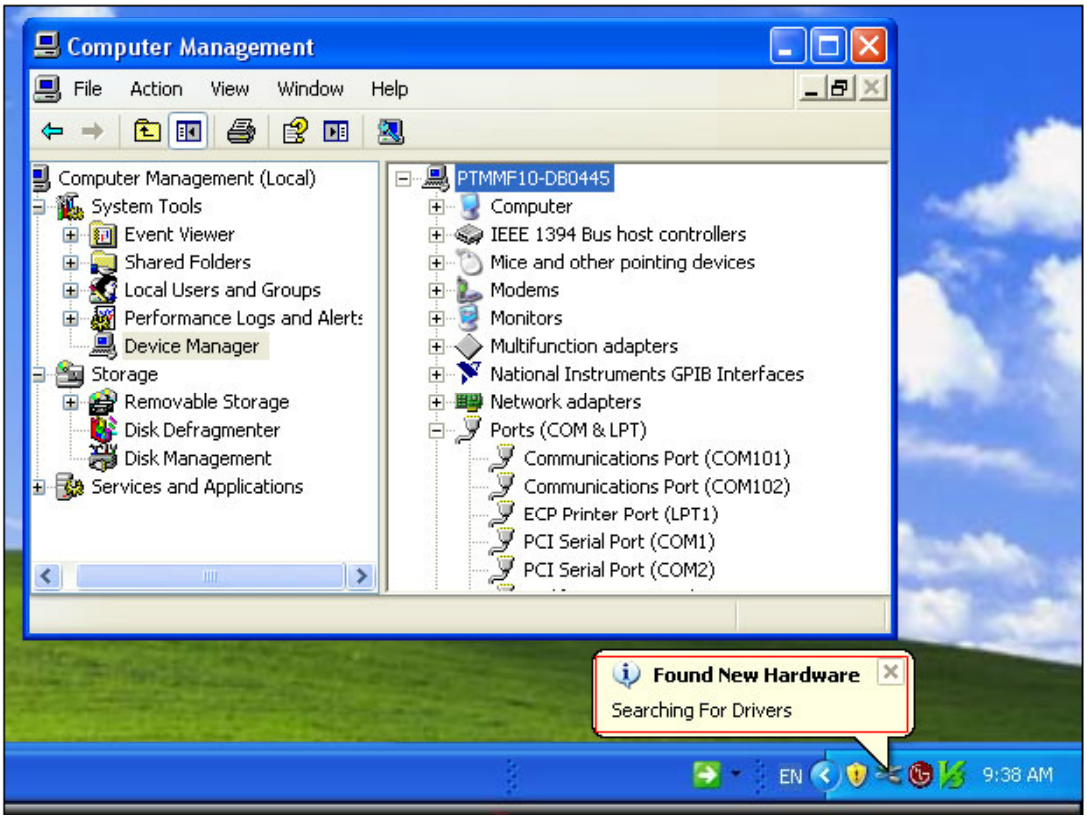

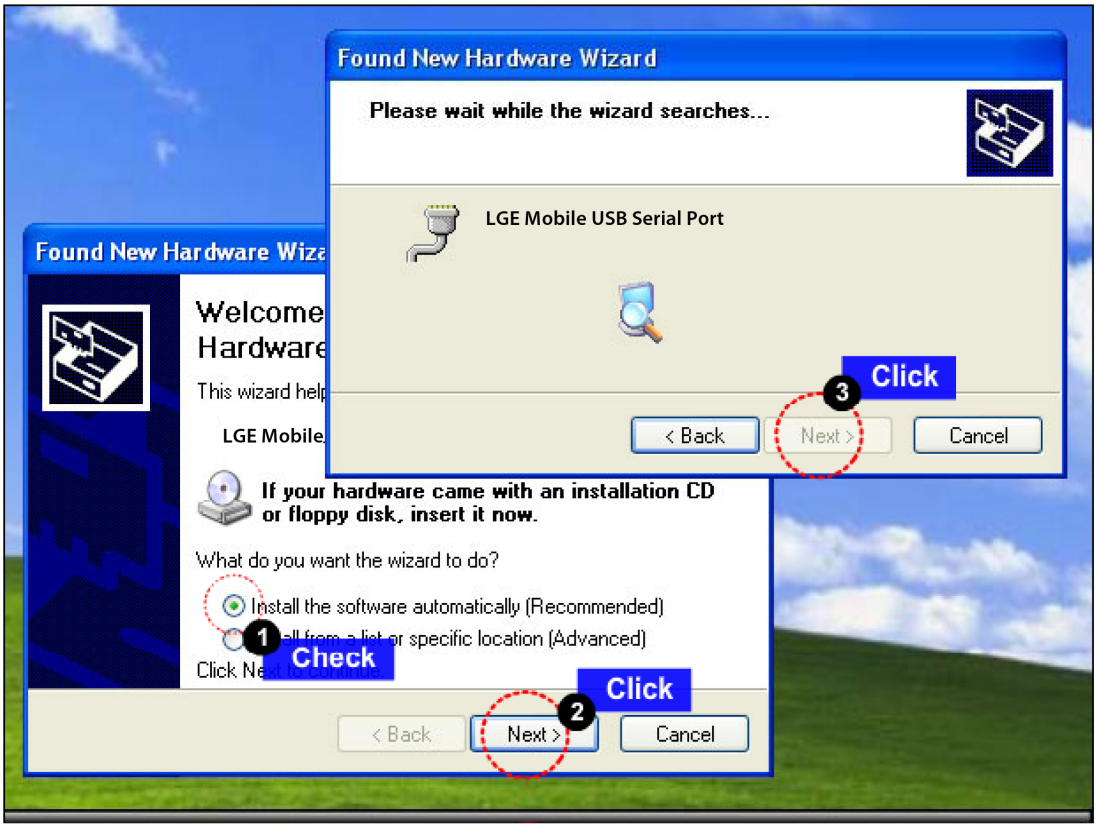

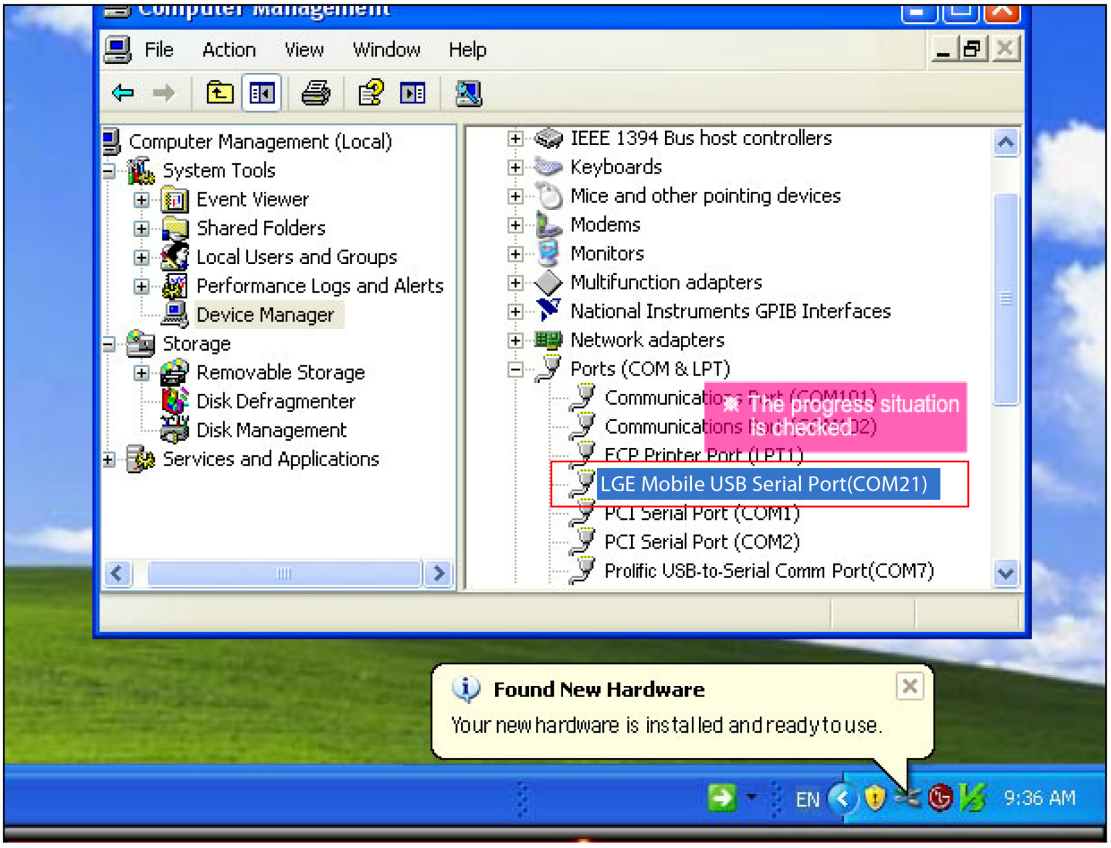

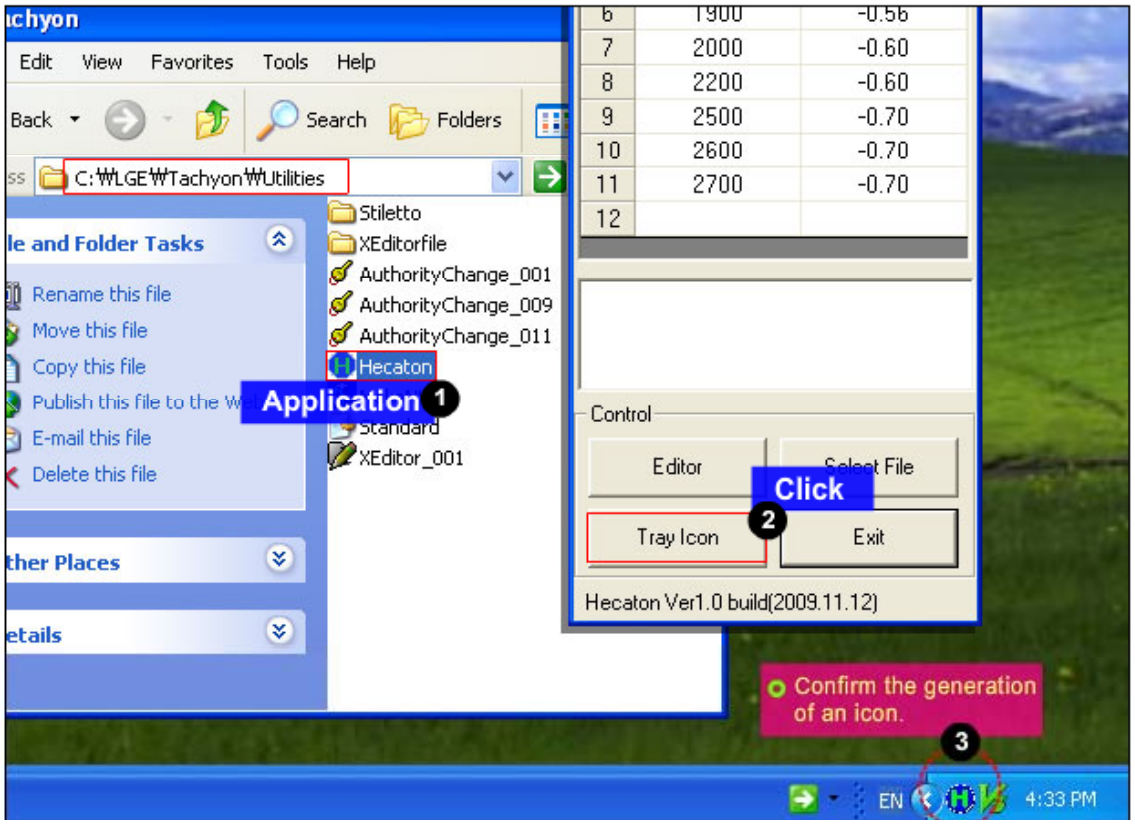

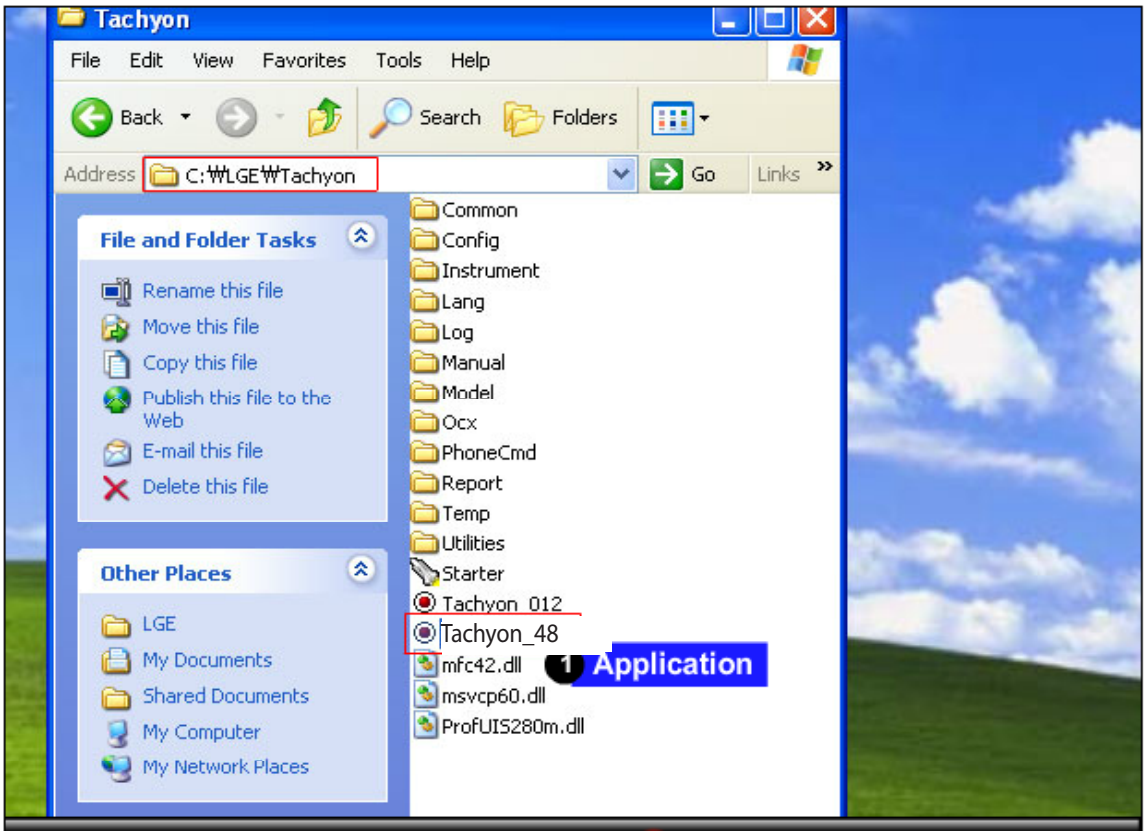

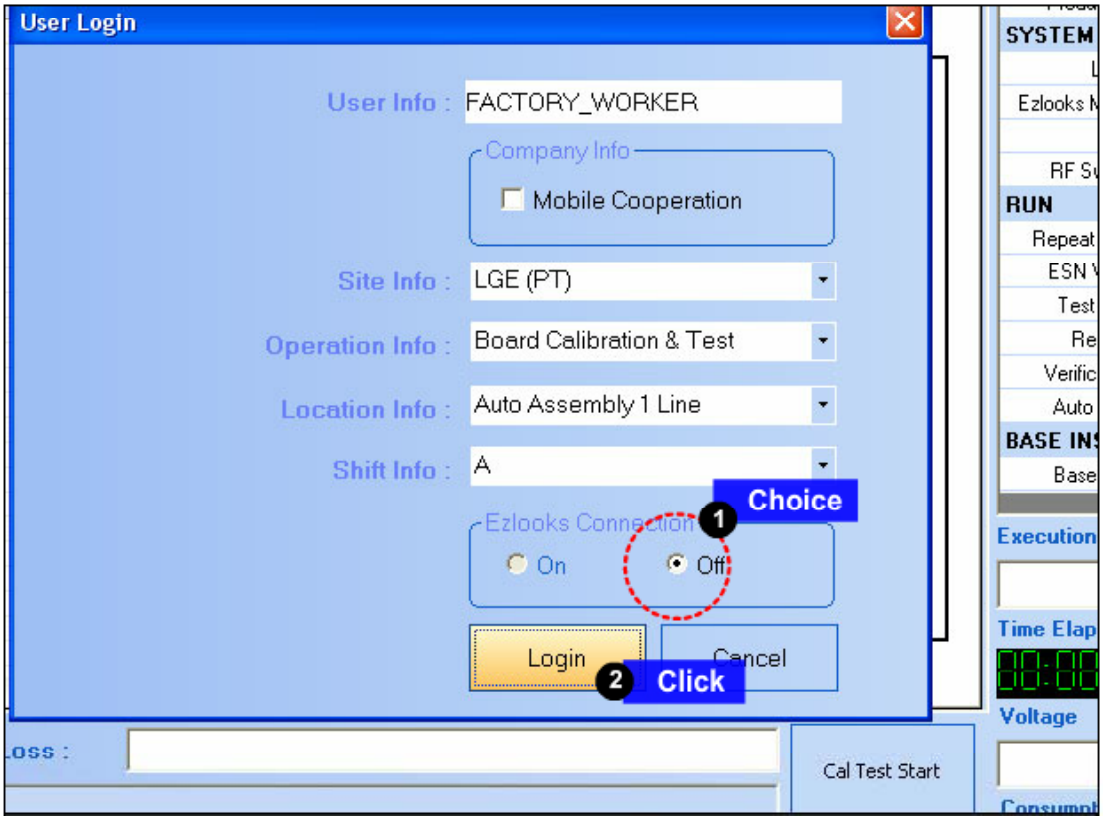

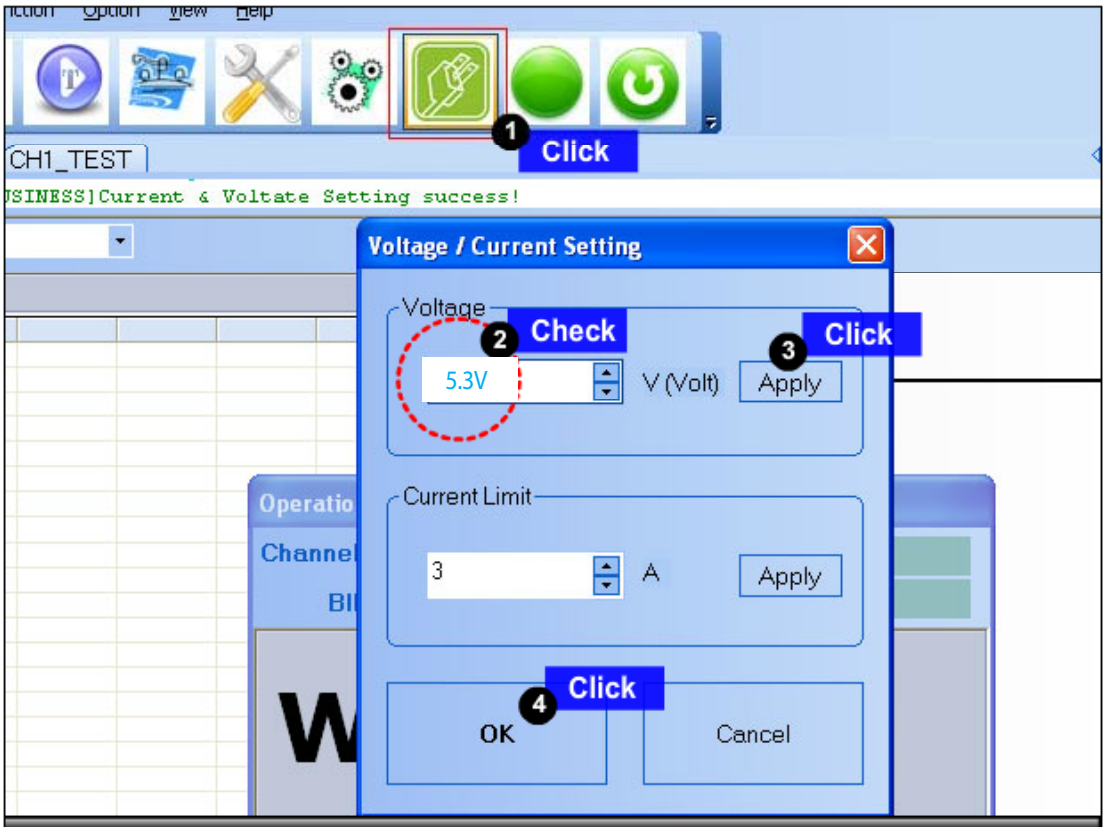

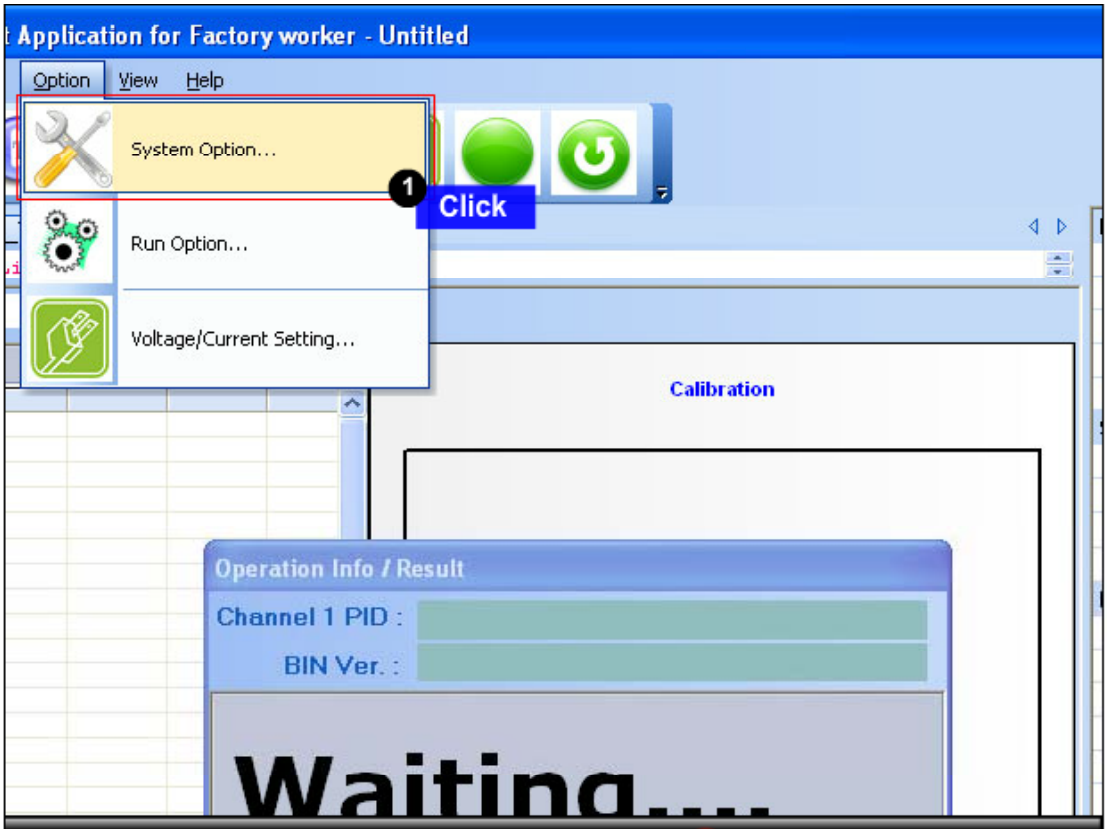

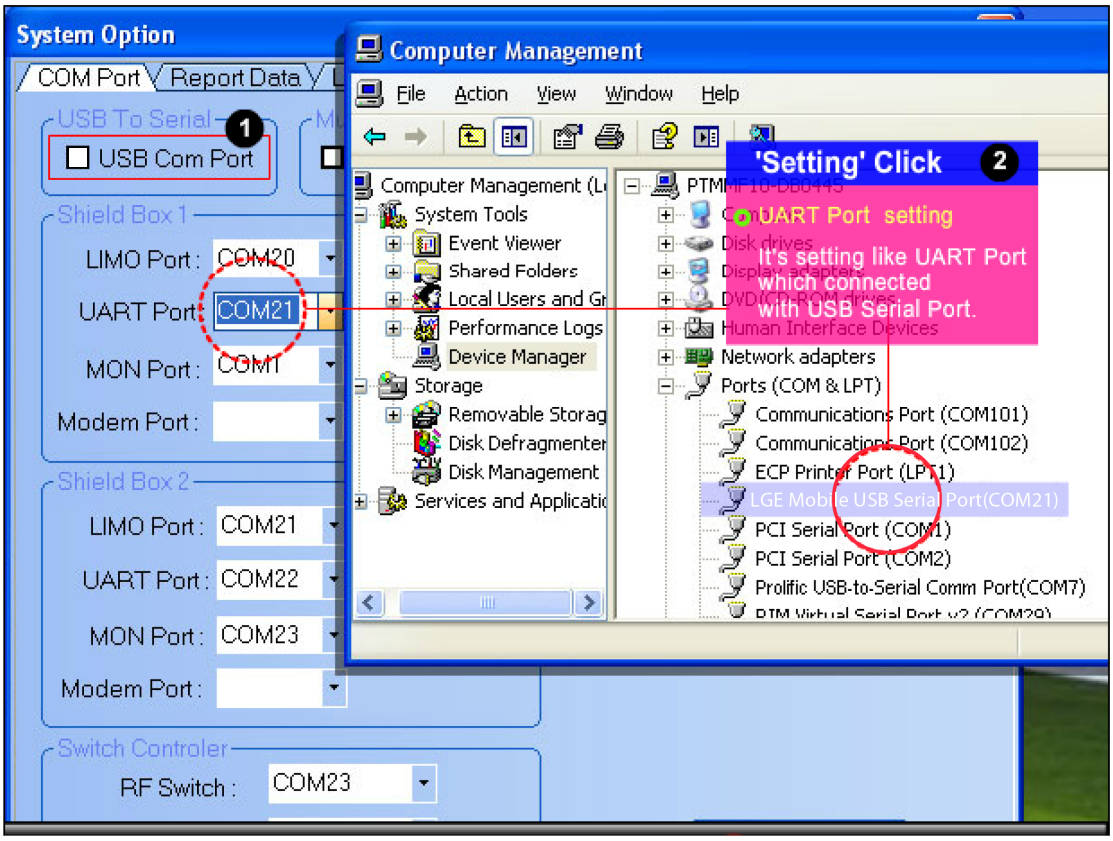

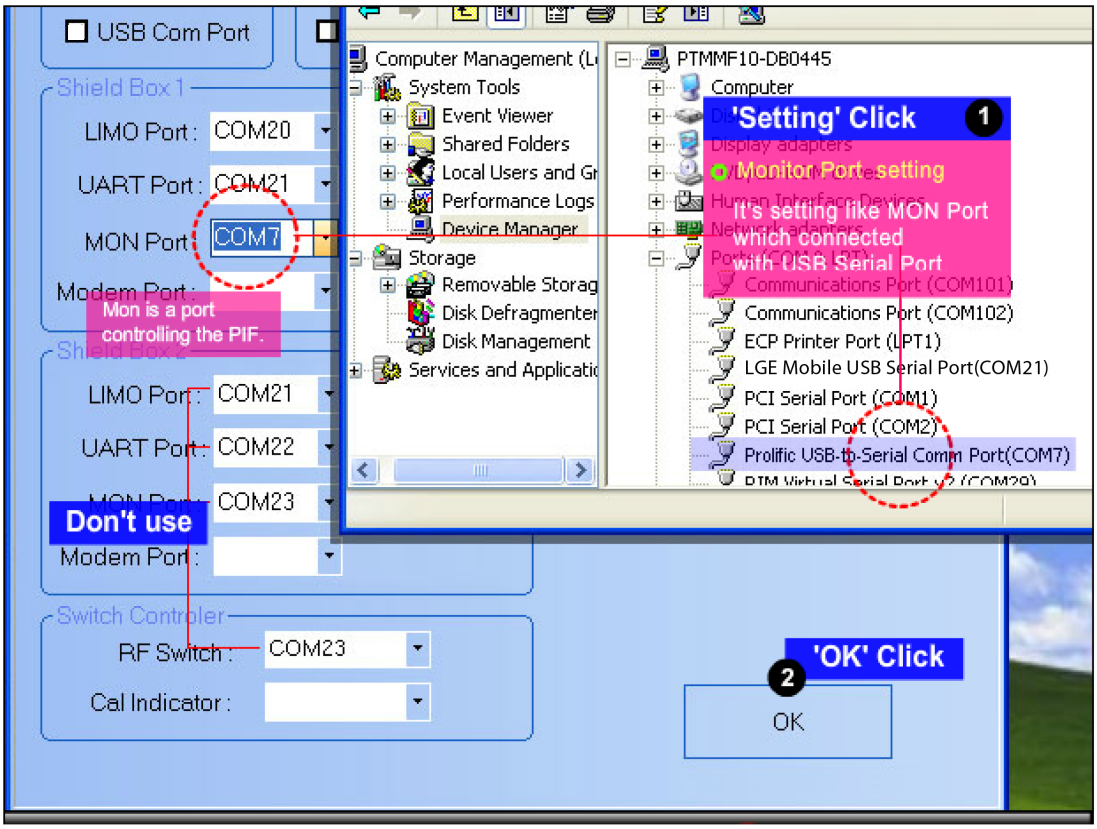

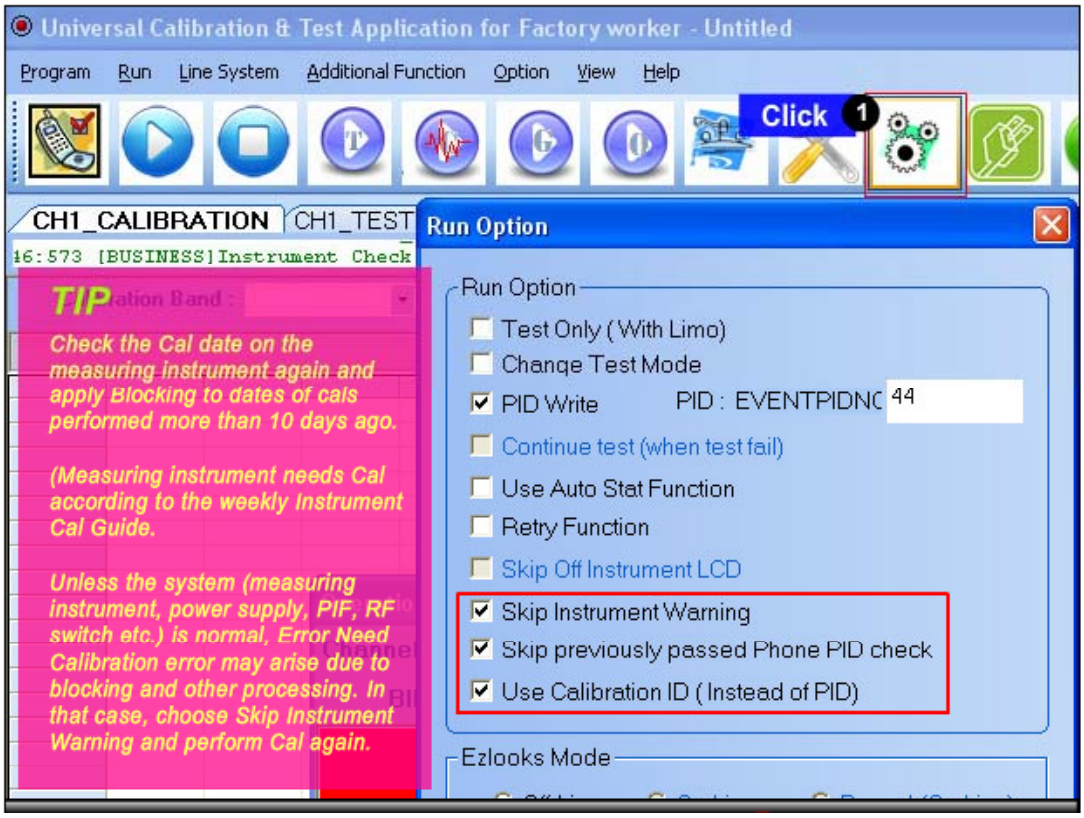

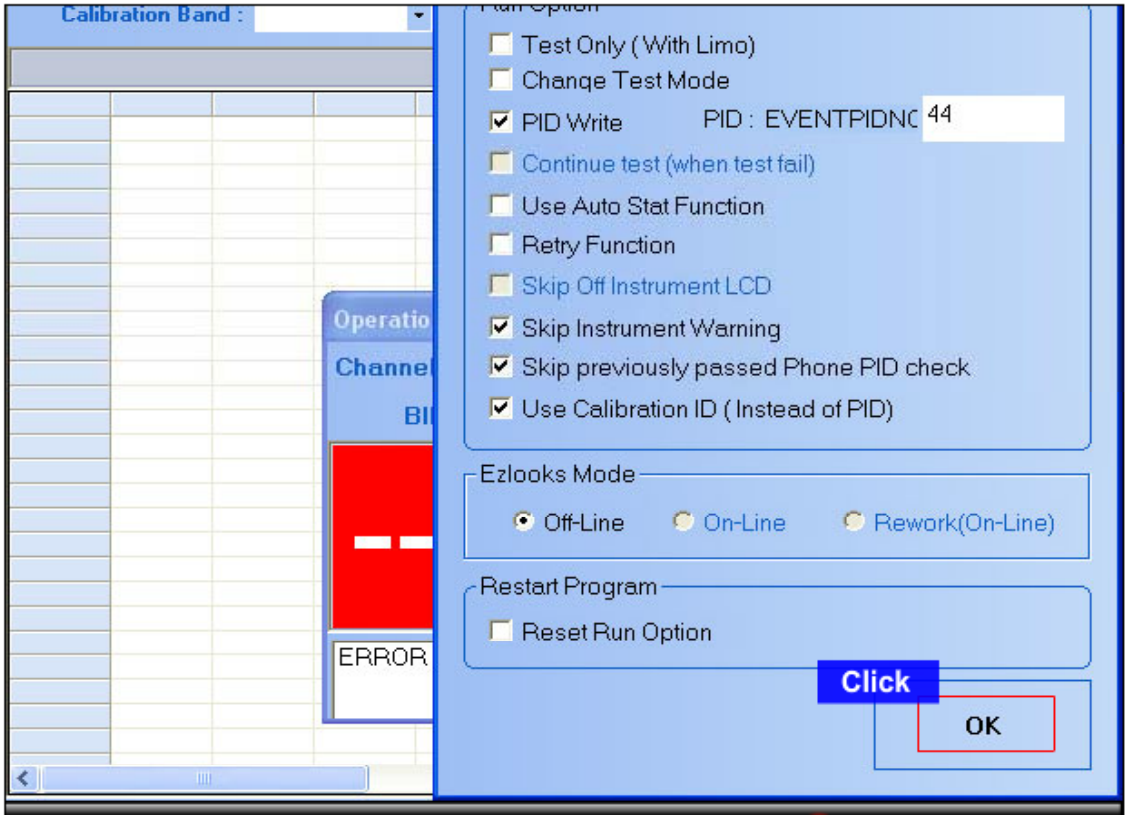

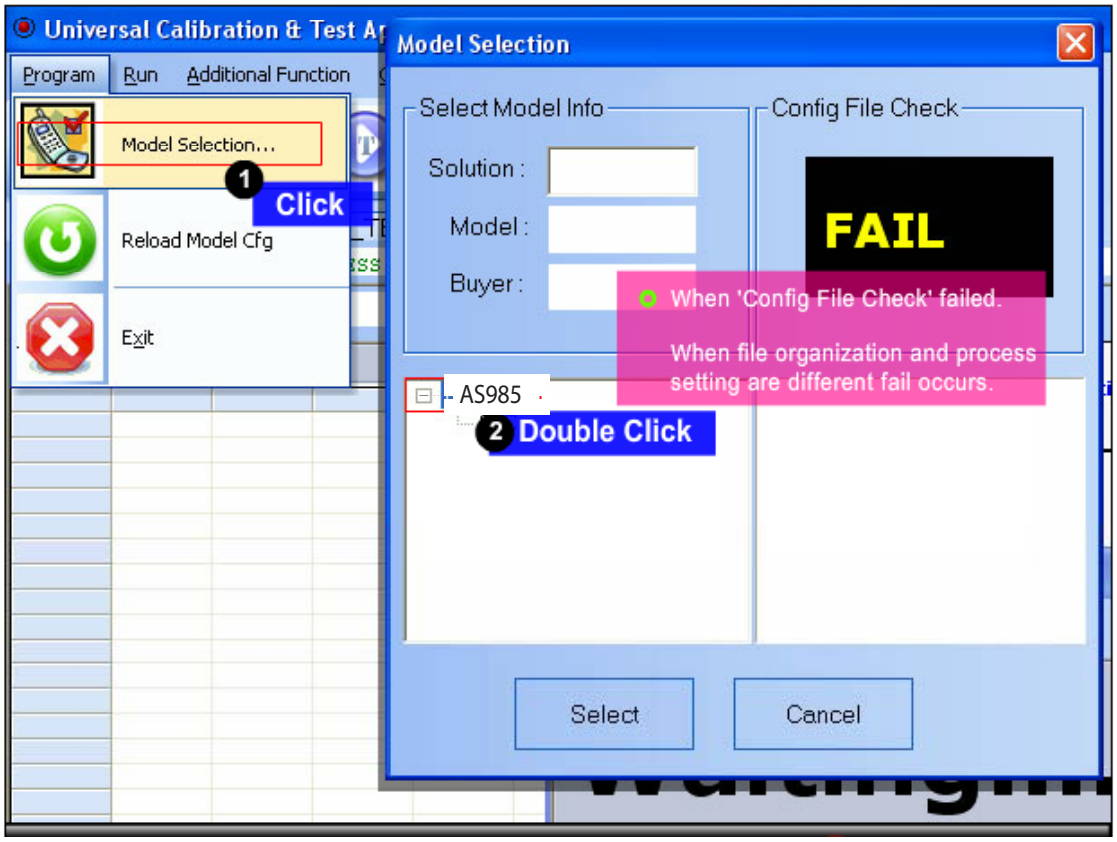

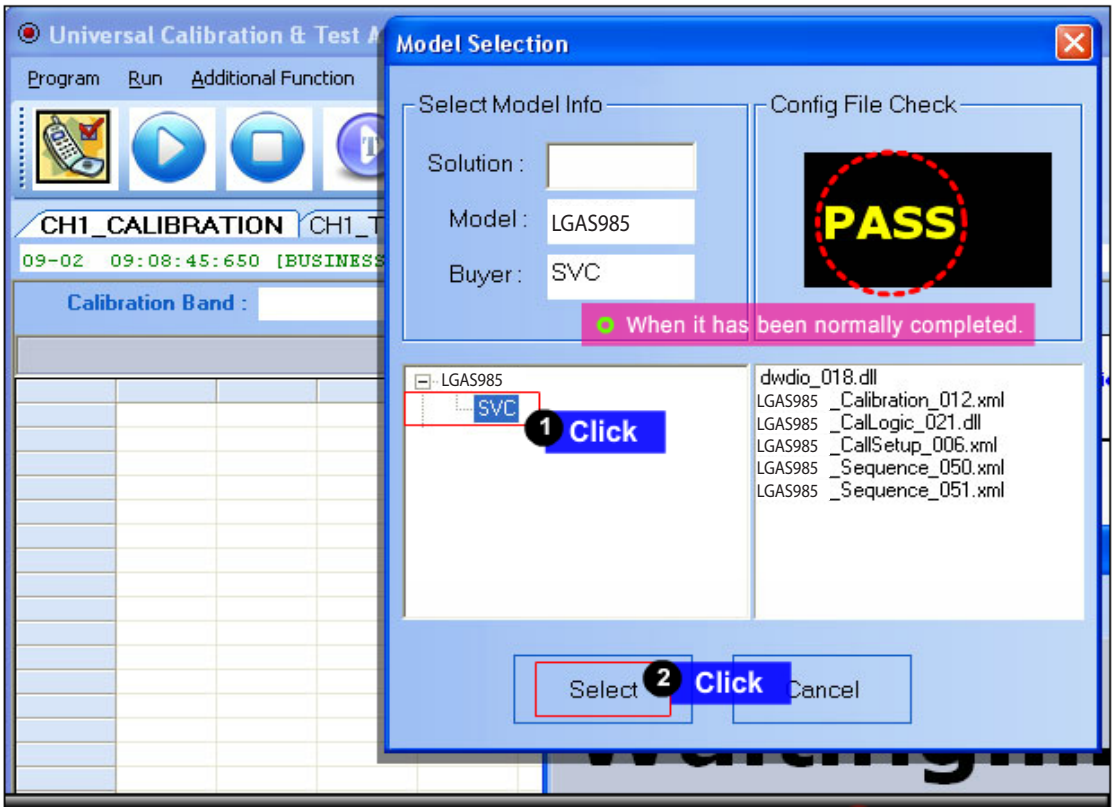

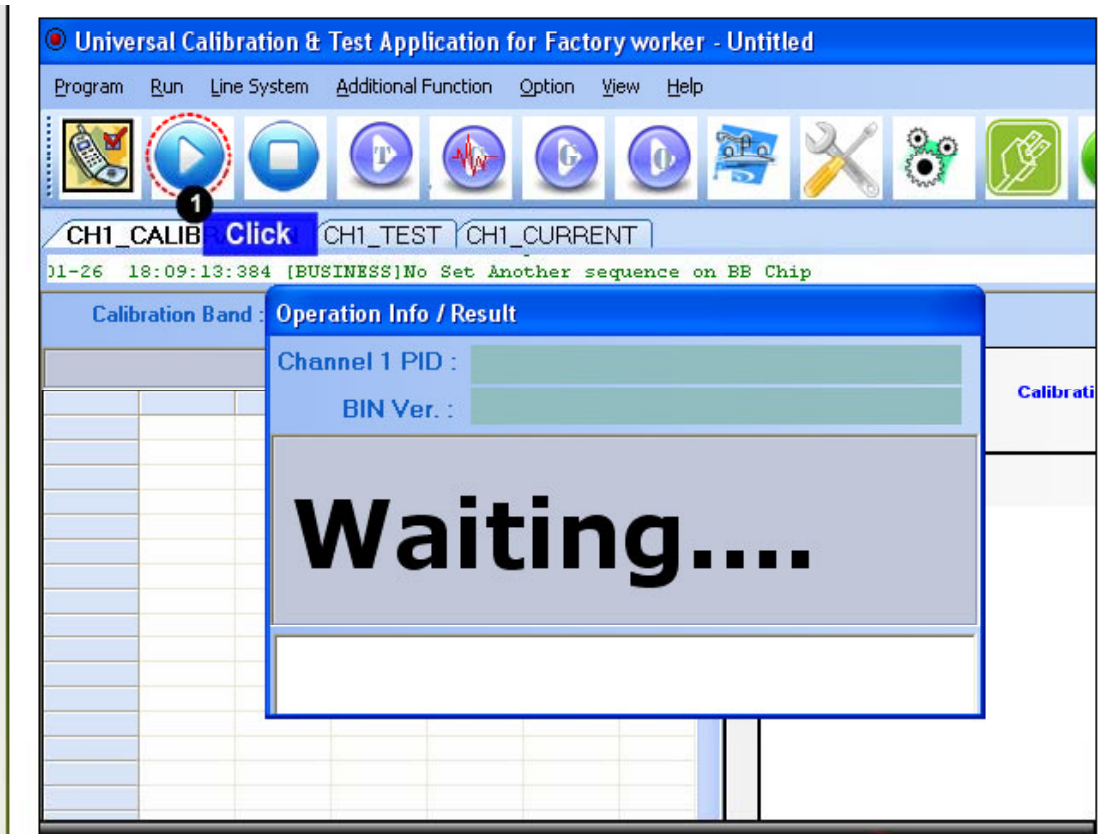

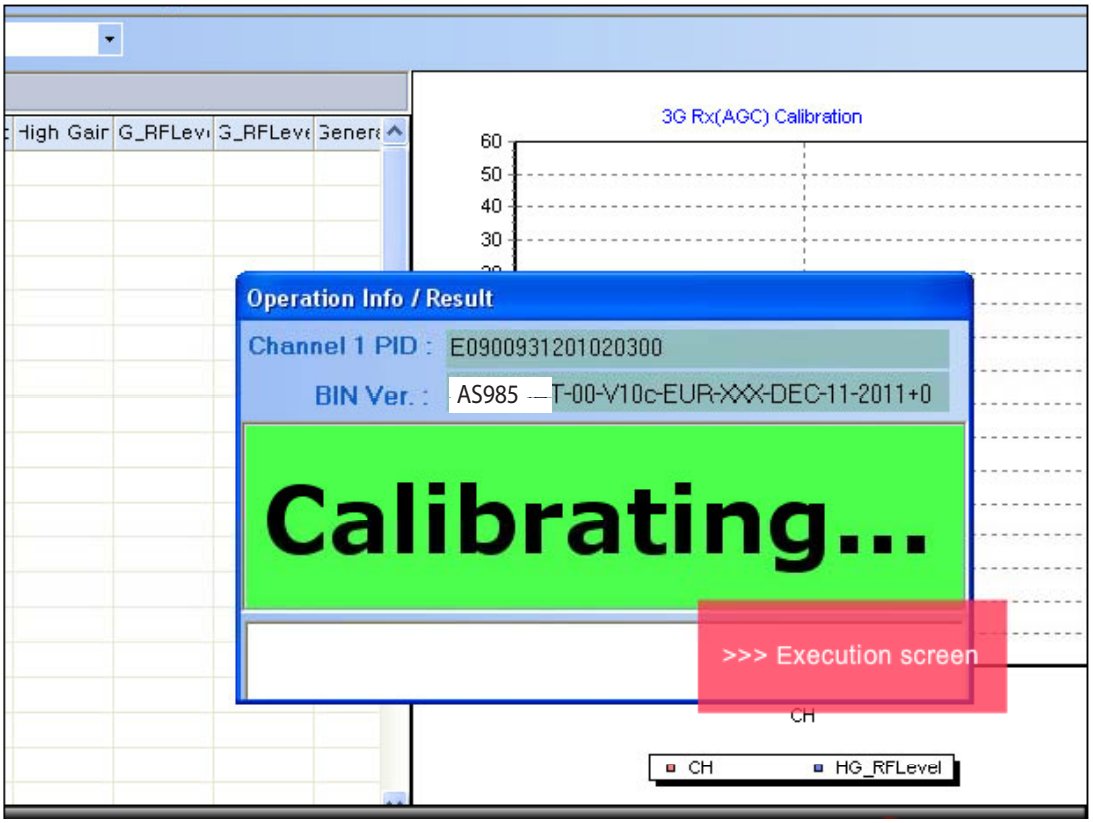

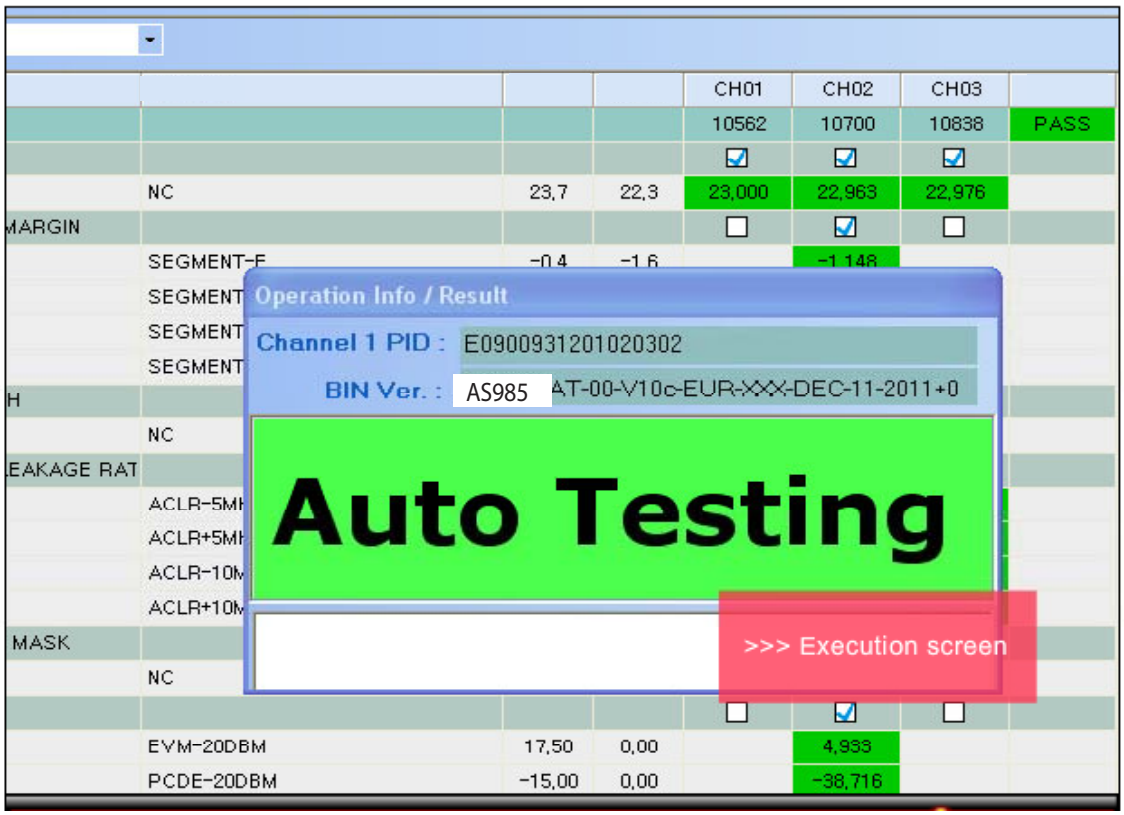

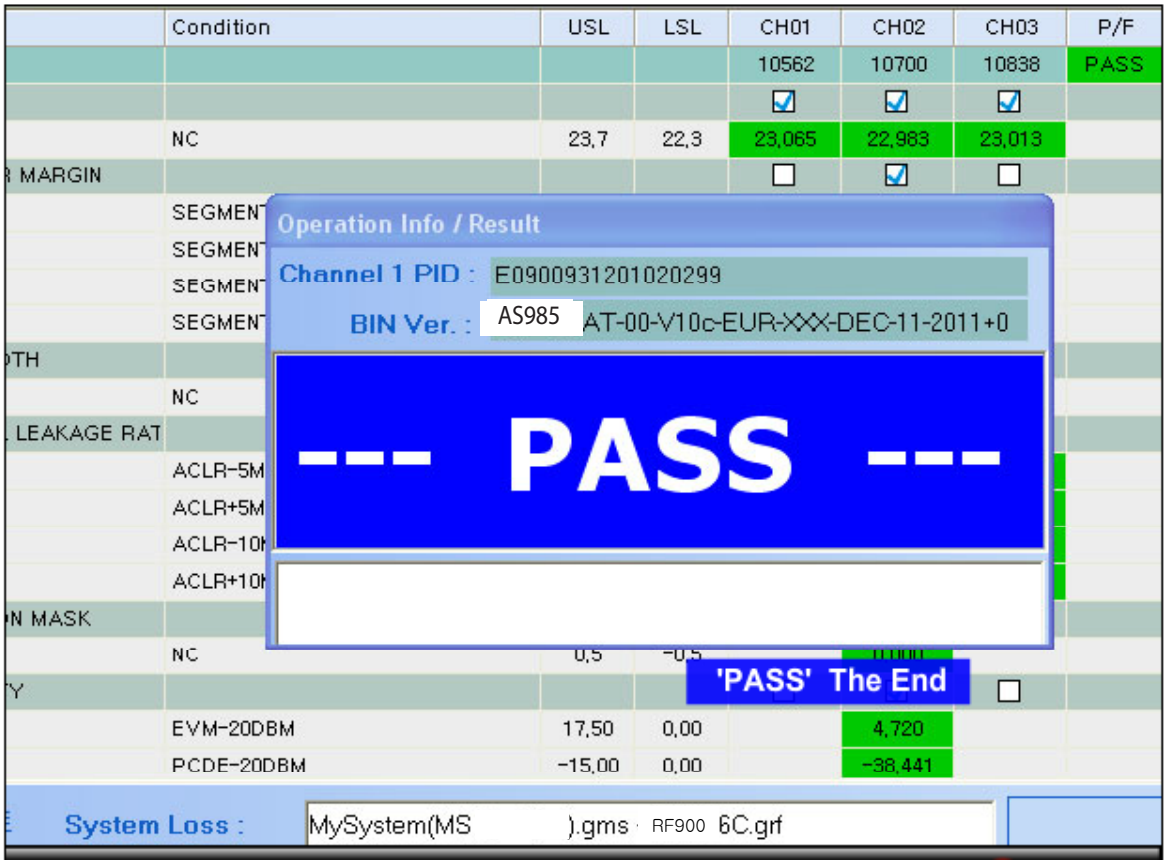

10. DISASSEMBLE GUIDE

Disassemble screw (12ea)

Disassemble Rear Cover

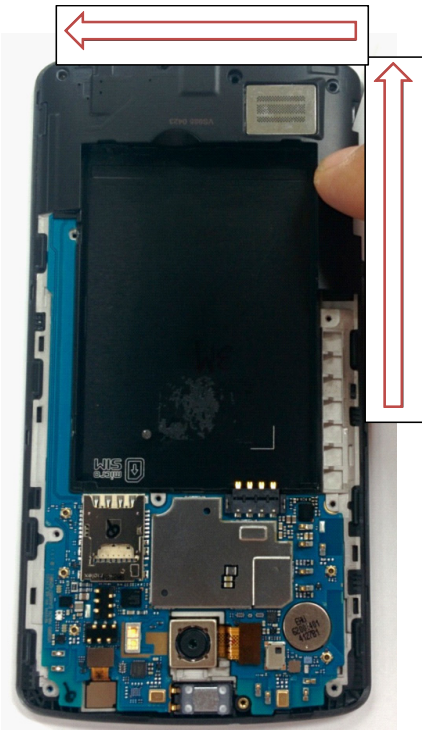

Disassemble Main Antenna

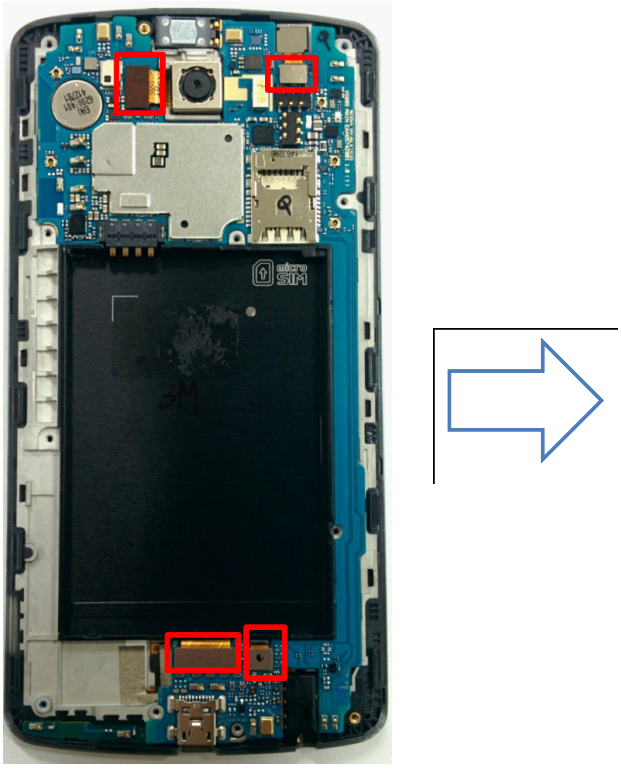

Disassemble connector

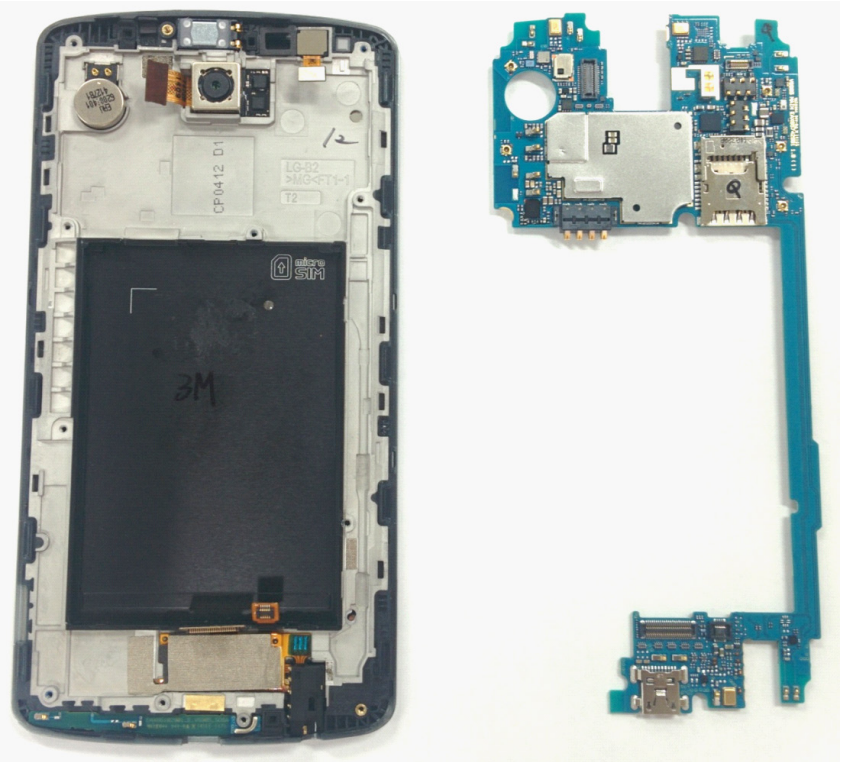

Disassemble Main PCB

Disassemble H/W parts (6ea)

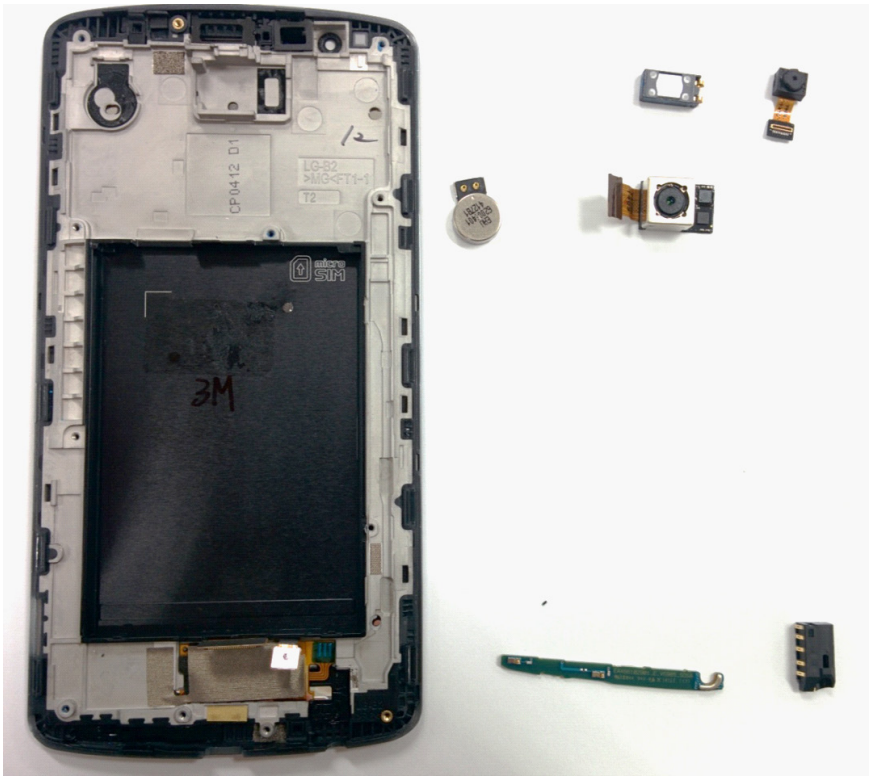

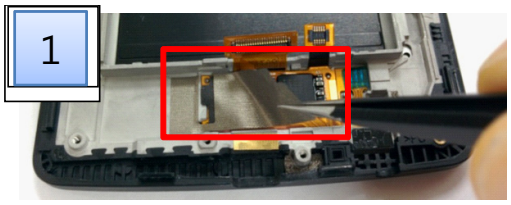

Disassemble Gasket touch IC

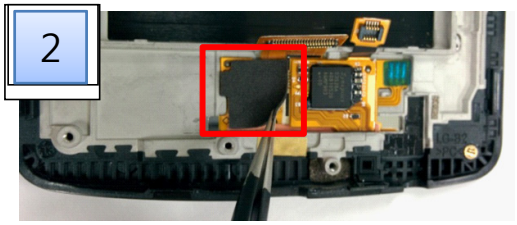

Disassemble Pad LCD FPCB

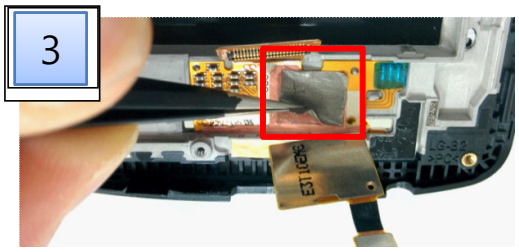

Disassemble Gasket LCD FPCB

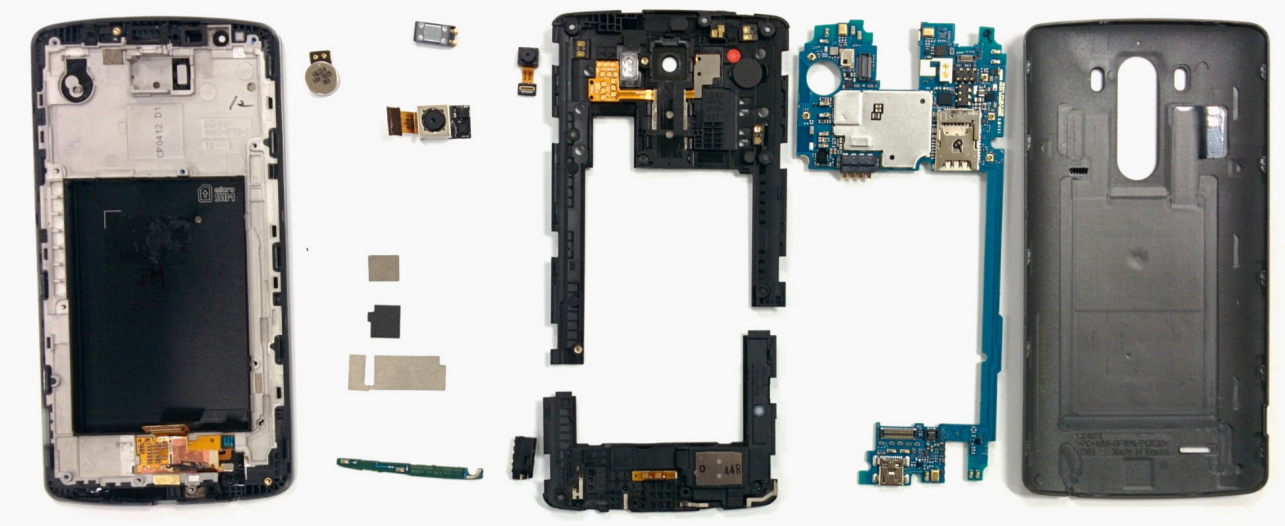

11. EXPLODED VIEW & REPLACEMENT PART LIST

11.1 EXPLODED VIEW(SBOM)

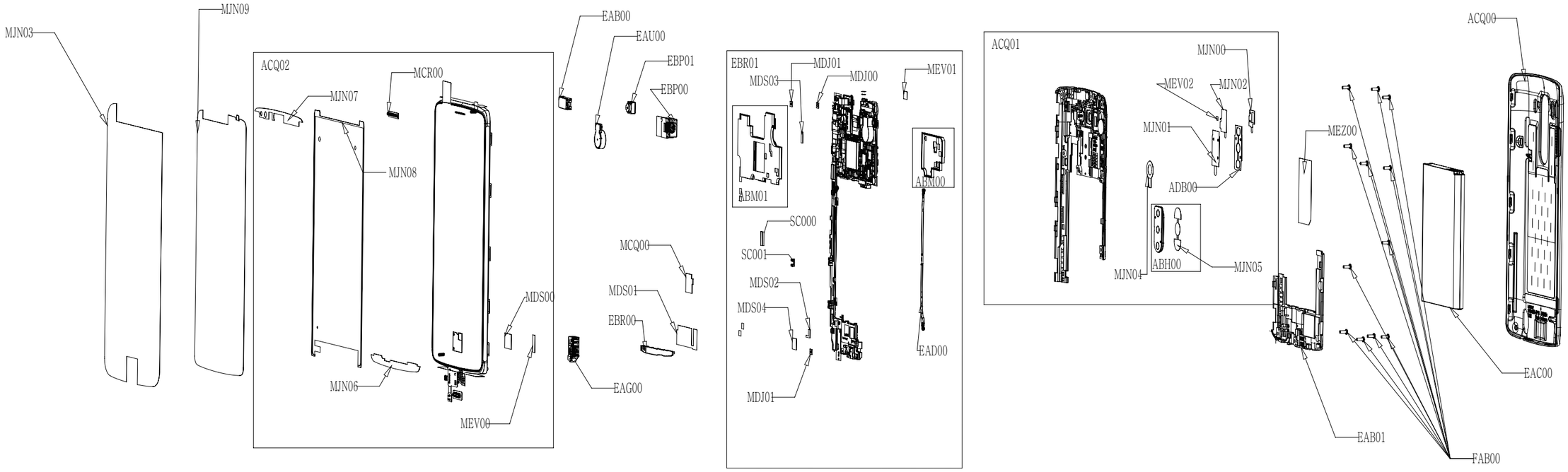

Location	Description	Location	Description	Location	Description	Location	Description
EAB00	Receiver	EBR00	PCB Assembly,Flexible	MDJ00	Filter	ABH00	Button Assembly
EAG00	Jack,Phone	MCQ00	Damper	MDJ01	Filter	MJN05	Tape,Protect
ACQ02	Cover Assembly,Bar(Sub)	MDS01	Gasket	EAD00	Cable,Assembly	FAB00	Screw,Machine
MJN06	Tape,Window	MJN09	Tape,USP Film	ABM00	Can Assembly,Shield	EAB01	Speaker Module
MJN07	Tape,Window	MJN03	Tape,Protect	ABM01	Can Assembly,Shield	MEZ00	Label,Approval
MJN08	Tape,Window	EBR01	PCB Assembly,Main	ACQ01	Cover Assembly,Rear(SVC)	ACQ00	Cover Assembly,Battery
MCR00	Deco	SC000	Can,Shield	MJN00	Tape	EAC00	Rechargeable Battery,Lithium Ion
MEV00	Insulator	SC001	Bracket	ADB00	Dome Assembly,Metal		
MDS00	Gasket	MEV01	Insulator	MEV02	Insulator		
EAU00	Motor,DC	MDS02	Gasket	MJN01	Tape		
EBP00	Camera Module	MDS03	Gasket	MJN02	Tape		
EBP01	Camera Module	MDS04	Gasket	MJN04	Tape,Protect		

EXPLODED VIEW(ASSY)

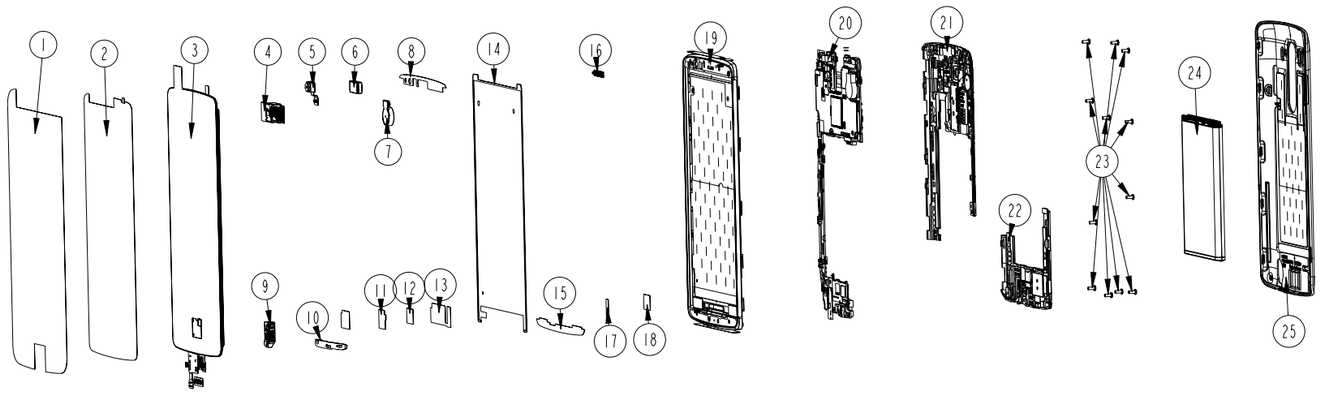

No	Part Name	Part Number	Q´ty	Remark
25	Cover Assy, Battery	ACQ87133306	1	
24	Battery	EAC62378702	1	
23	Screw, Machine	GMEY0014301	12	
22	Module, Ant_Spk	EAB63248902	1	
21	Cover Assy, Rear	ACQ87172341	1	
20	PCB Assy, Main	EBR78738604	1	
19	Cover Assy, Front	ACQ87172201	1	
18	Gasket, LCD FPCB	MDS64610801	1	
17	Insulator, led FPCB	MEV65014401	1	
16	Deco, Receiver	MCR65486501	1	
15	Tape, Touch Window Bottom	MJN68847701	1	
14	Tape, Touch Window Middle	MJN68868201	1	
13	Gasket, Touch IC	MDS64610901	1	
12	Gasket, LCD FPCB	MDS64610801	1	
11	Pad, LCD FPCB	MCQ67705201	1	
10	PCB Assembly (SOSA Ant)	EBR79252401	1	
9	Earjack	EAG63849801	1	
8	Tape, Touch Window Top	MJN68868101	1	
7	Motor	EAU62004401	1	
6	Receiver	EAB63268701	1	
5	Camera, VT	EBP62061901	1	
4	Camera, Main	EBP61801702	1	
3	Module, Hybrid Touch LCD	EAT62173901	1	
2	Tape Protection (USP)	MJN69307501	1	
1	Tape Protection, Window	MJN69307901	1	

EXPLODED VIEW(TOTAL)

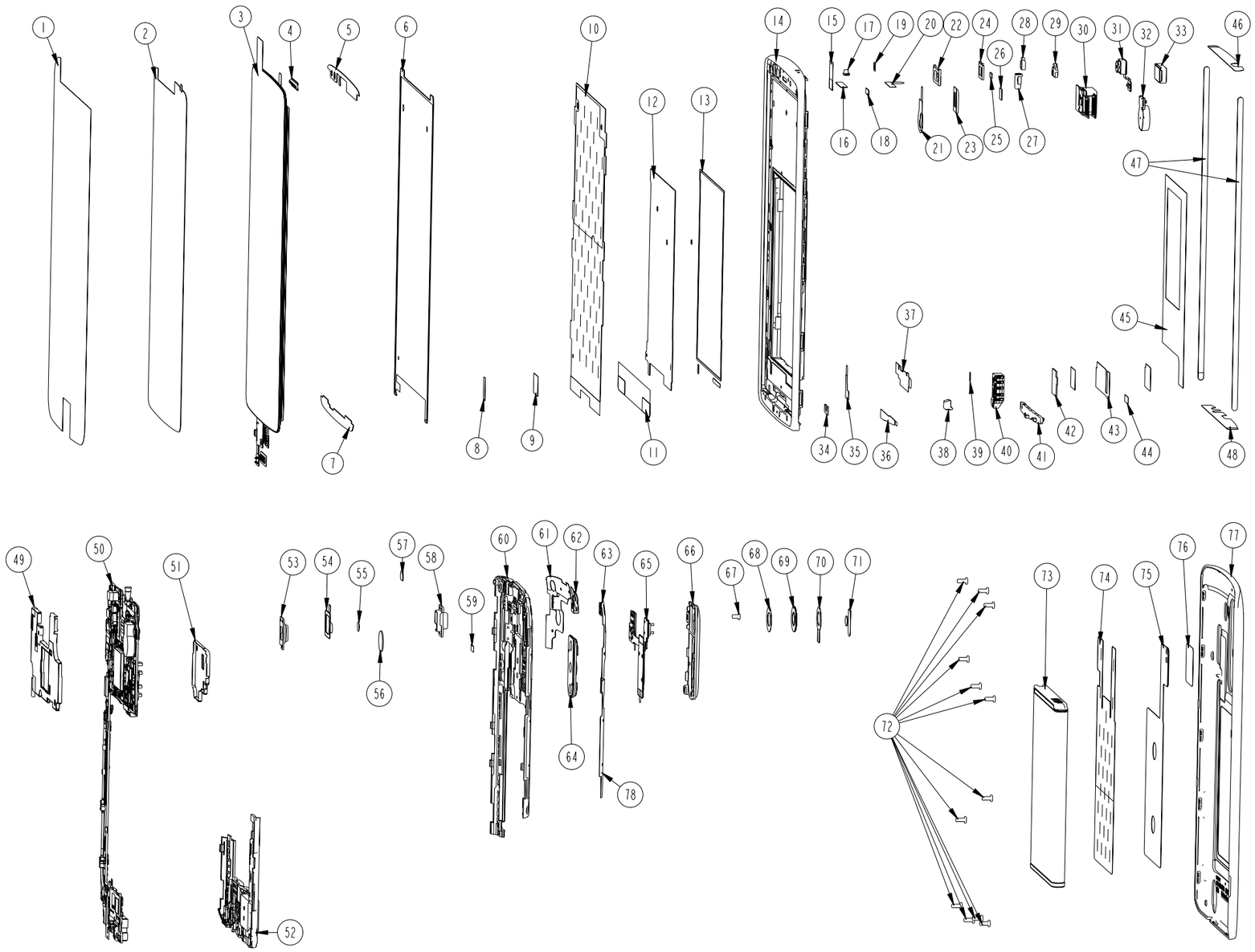

No.	Q'ty	Part Number	Part Item	No.	Q'ty	Part Number	Part Item
1	1	MJN69307901	Tape Protection, Window	41	1	EBR79252401	PCB Assembly (SOSA Ant)
2	1	MJN69307551	Tape Protection (USP)	42	1	MCQ67705201	Pad, LCD FPCB
3	1	EAT62173901	Module, Hybrid Touch LCD	43	1	MDS64610901	Gasket, Touch IC
4	1	MCR65486501	Deco, Receiver	44	1	MDS64814301	GASKET(EX_FRONT_6)
5	1	MJN68868101	Tape, Touch Window Top	45	1	MJN69189701	Tape Protection Plate LCD_EX
6	1	MJN68868201	Tape, Touch Window Middle	46	1	MJN69169201	Tape Protection Front Top
7	1	MJN68847701	Tape, Touch Window Bottom	47	2	MJN68848101	Tape Protection Front side(x2)
8	1	MEV65014401	Insulator, led FPCB	48	1	MJN69130301	Tape Protection Front BTM
9	1	MDS64610801	Gasket, LCD FPCB	49	1	ABM74416401	Can Assy, TOP
10	1	MHK64386601	PU Sheet LCD	50	1	EBR78738604	PCB Assy, Main
11	1	MCQ67684901	Pad LCD BTM	51	1	ABM74416701	Can Assy, BTM
12	1	MGJ63993402	Sheet, AL	52	1	EAB63248902	Module, Ant_Spk
13	1	MJN68867701	Tape, AL Sheet	53	1	MFB63592901	Lens, LDAF
14	1	ACQ87132902	Cover Assy, Front (Sub)	54	1	MCQ67685101	Damper, Camera Main
15	1	MEV64996001	INSULATOR(VT CAMERA)	55	1	MLAB0001102	Label, A/S(Circle)
16	1	MGJ63766001	SPCC	56	1	MCQ67685201	Damper, Motor
17	1	MKC65178801	Window, IR LED	57	1	MCQ67705301	Damper, Receiver Rear
18	1	MDS64832801	GASKET(EX_FRONT_2)	58	1	MFB63432901	Lens, Flash
19	1	MHK64425401	Sheet, Diffuser	59	1	MDS64950101	Gasket, Rear
20	1	MJN68847601	TAPE SPCC	60	1	ACQ87133101	Cover Assy, Rear (Sub)
21	1	MJN68867801	Tape, Motor	61	1	EAA63325302	FPCB Ant LTE
22	1	MCQ67684801	Damper, Receiver	62	1	EAA63384502	FPCB Ant BT/Wifi
23	1	MJN68868001	Tape, Camera Main	63	1	EAA63384602	FPCB Ant GPS
24	1	MCQ67685001	Pad, Sensor	64	1	ABH74999601	Button Assembly, Rear Key
25	1	MCQ68006201	Pad IRRC	65	1	EBR78781801	FPCB Assembly (Rear key)
26	1	MCQ68125301	Pad, T_coil	66	1	ACW74417201	Deco, Assembly, Rear Key
27	1	MBL65877101	Cap, Mic Top 1	67	1	GMEY0012901	Screw, Machine
28	1	MBL66099701	Cap, LED	68	1	MJN68868301	Tape, Window Camera
29	1	MBL65916901	Cap, Mic Top 2	69	1	MKC64978811	Window, Camera
30	1	EBP61801702	Camera, Main	70	1	MJN68927001	Tape Protection, Window Camera
31	1	EBP62061901	Camera, VT	71	1	MEV65110801	Tape Protection, LDAF
32	1	EAU62004401	Motor	72	12	GMEY0014301	Screw, Machine
33	1	EAB63268701	Receiver	73	1	EAC62378706	Battery
34	1	MDS64610701	Gasket, SOSA Ant	74	1	MHK64425501	Sheet, Graphite Battery
35	1	MJN69267801	Tape, Earjack	75	1	EAA63404701	Antenna, NFC
36	1	MJN69147401	Tape, SOSA Ant	76	1	MCK68145206	Cover, Battery
37	1	MDS64570601	Gasket, LCD FPCB Front	77	1	MHK64688201	Sheet, Graphite Battery_2
38	1	MBL65877201	Cap, Mic Btm	78	1	EAA63325202	FPCB Ant BC1-MRD
39	1	MDS64814401	GASKET(EX_FRONT_9)				
40	1	EAG63849801	Earjack				

11.2 Replacement Parts <Mechanic component>

Note: This Chapterisused for reference,Part order is ordered by SBOM standard on GCSC

Level	Location no	Description	P/N	Specification	Remark
1	AGQ000000	Phone Assembly	AGQ87508203	LGAS985.ABPTWH WH:WHITE WHITE -	
2	ACQ100400	Cover Assembly,EMS	ACQ87074903	LGAS985.ABPTWH WH:WHITE WHITE -	
3	ACQ003400	Cover Assembly,Bar	ACQ87133445	LGAS985.ABPTWH WH:WHITE WHITE -	
4	ACQ02	Cover Assembly, Bar(Sub)	ACQ87190301	LGD855.ADEUWH WH:WHITE WHITE -	
5	ACQ032700	Cover Assembly,Front	ACQ87172201	LGD855.ADEUWH WH:WHITE WHITE -	
6	MCQ000001	Damper	MCQ67685001	COMPLEX LGF400L.ALGTWH BK:BLACK BLACK -	
6	MHK000002	Sheet	MHK64826901	COMPLEX LGD855.A6D2TN ZZ:Without Color -	
6	MDS000001	Gasket	MDS64610701	COMPLEX LGF400L.ALGTWH ZZ:Without Color -	
6	MHK000000	Sheet	MHK64386601	COMPLEX LGF400L.ALGTWH ZZ:Without Color -	
6	MHK000001	Sheet	MHK64425401	COMPLEX LGF400L.ALGTWH ZY:Color Unfixed -	
6	MJN000000	Tape	MJN68867701	COMPLEX LGF400L.ALGTWH ZZ:Without Color -	
6	MJN000001	Tape	MJN68867801	COMPLEX LGF400L.ALGTWH ZZ:Without Color -	
6	MJN000003	Tape	MJN68868001	COMPLEX LGF400L.ALGTWH ZZ:Without Color -	
6	MKC041800	Window,IRDA	MKC65178801	MOLD PC LGF400L.ALGTWH BK:BLACK BLACK -	
6	ACQ033200	Cover Assembly, Front(Sub)	ACQ87132901	LGD855.ADEUWH WH:WHITE WHITE -	
7	MCK032700	Cover,Front	MCK68105301	MOLD PC LGD855.ADEUWH WH:WHITE WHITE -	
7	MCK032701	Cover,Front	MCK68126301	CASTING MG LGD855.ADEUWH ZZ:Without Color -	
7	MET099500	Insert,Nut	MICE0016907	COMPLEX MECH_COMMON ZZ:Without Color -	
6	MBL000000	Cap	MBL65877101	MOLD Rubber LGF400L.ALGTWH ZY:Color Unfixed -	

Level	Location no	Description	P/N	Specification	Remark
6	MBL000002	Cap	MBL65877201	MOLD Rubber LGF400L.ALGTWH ZY:Color Unfixed -	
6	MBL000001	Cap	MBL65916901	MOLD Rubber LGF400L.ALGTWH ZY:Color Unfixed -	
6	MCQ000000	Damper	MCQ67684801	COMPLEX LGF400L.ALGTWH BK:BLACK BLACK -	
6	MBL000003	Cap	MBL66099701	MOLD ABS LGF400L.ALGTWH BK:BLACK BLACK -	
6	MCQ043300	Damper,LCD	MCQ67684901	COMPLEX LGF400L.ALGTWH BK:BLACK BLACK -	
6	MCQ000002	Damper	MCQ68006201	COMPLEX LGF400L.ALGTWH BK:BLACK BLACK -	
6	MDS000004	Gasket	MDS64814301	COMPLEX LGD855.ADEUWH ZY:Color Unfixed -	
6	MDS000005	Gasket	MDS64814401	COMPLEX LGD855.ADEUWH ZY:Color Unfixed -	
6	MGJ000001	Plate	MGJ63993402	PRESS STS 0.2 LGD855.ADEUWH ZY:Color Unfixed -	
6	MDS000002	Gasket	MDS64832801	COMPLEX LGD855.ADEUWH ZY:Color Unfixed -	
6	MEV000000	Insulator	MEV64996001	COMPLEX LGF400L.ALGTWH ZZ:Without Color -	
6	MGJ000000	Plate	MGJ63766001	PRESS STS 0.2 LGF350L.ALGTWH ZZ:Without Color -	
6	MJN000004	Tape	MJN68847601	COMPLEX LGF400L.ALGTWH ZZ:Without Color -	
6	MJN061102	Tape,Protect	MJN68848101	COMPLEX LGF400L.ALGTWH ZZ:Without Color -	
6	MJN061101	Tape,Protect	MJN69130301	COMPLEX LGF400L.ALGTWH ZZ:Without Color -	
6	MJN000005	Tape	MJN69147401	COMPLEX LGF400L.ALGTWH ZZ:Without Color -	
6	MJN061100	Tape,Protect	MJN69169201	COMPLEX LGF400L.ALGTWH ZZ:Without Color -	
6	MJN061104	Tape,Protect	MJN69189701	COMPLEX LGD855.ADEUWH ZY:Color Unfixed -	
6	MDS000000	Gasket	MDS64570601	COMPLEX LGF400L.ALGTWH ZZ:Without Color -	
6	MJN000006	Tape	MJN69267801	COMPLEX LGD855.A6D2TN ZZ:Without Color -	
6	MCQ000003	Damper	MCQ68125301	COMPLEX LGVS985.AVRZTN ZY:Color Unfixed -	
5	MJN06	Tape,Window	MJN68847701	COMPLEX LGF400L.ALGTWH ZZ:Without Color -	
5	MJN07	Tape,Window	MJN68868101	COMPLEX LGF400L.ALGTWH BK:BLACK BLACK -	

Level	Location no	Description	P/N	Specification	Remark
5	MJN08	Tape,Window	MJN68868201	COMPLEX LGF400L.ALGTWH ZZ:Without Color -	
5	MCR00	Decor	MCR65486501	PRESS STS 0.2 LGF400L.ALGTWH ZY:Color Unfixed -	
5	MEV00	Insulator	MEV65014401	COMPLEX LGF400L.ALGTWH WH:WHITE WHITE -	
5	MDS00	Gasket	MDS64610801	COMPLEX LGF400L.ALGTWH ZZ:Without Color -	
4	MEZ000000	Label	MLAZ0038301	COMPLEX LG-VX6000 ZZ:Without Color PID Label 4 Array PRINTING,	
7	SC100	Plate	MGJ64044601	PRESS SUS 0.8 LGF400L.ALGTWH ZZ:Without Color -	
4	MCQ00	Damper	MCQ67705201	COMPLEX LGF400L.ALGTWH BK:BLACK BLACK -	
4	MDS01	Gasket	MDS64610901	COMPLEX LGF400L.ALGTWH ZZ:Without Color -	
4	MJN09	Tape,USP Film	MJN69307501	COMPLEX LGD855.A6D2TN ZZ:Without Color -	
4	MJN03	Tape,Protect	MJN69307901	COMPLEX LGD855.A6D2TN ZZ:Without Color -	
4	MEZ000900	Label,After Service	MLAB0004801	COMPLEX LG-LB3300 LGT ZZ:Without Color -	
6	SC130015 SC130019 SC130020 SC130025 SC13005 SC13008	Clip	MBV62321701	PRESS STS 301 0.15 LGLU6200.ALGTBK BK:Black -	
6	SC1101	Can,Shield	MBK63993701	PRESS SUS 0.15 LGVS985.AVRZTN ZY:Color Unfixed -	
6	SC000	Can,Shield	MBK63852801	PRESS SUS 0.2 LGD855.ADEUWH ZZ:Without Color -	
6	SC001	Bracket	MAZ63332001	PRESS STS 0.2 LGSU540.ASKTBK ZZ:Without Color -	
6	SC130015 SC130019 SC130020 SC130025 SC13005 SC13008	Clip	MBV62321701	PRESS STS 301 0.15 LGLU6200.ALGTBK BK:Black -	
6	SC1104	Plate	MGJ64064201	PRESS STS 304 0.3 LGF400L.ALGTWH ZY:Color Unfixed -	
6	SC1103	Plate	MGJ64064101	PRESS STS 304 0.3 LGF400L.ALGTWH ZY:Color Unfixed -	

Level	Location no	Description	P/N	Specification	Remark
6	PID1	Label	MEZ65049701	COMPLEX LGLS720.ASPRTS ZZ:Without Color PID label	
5	MEV01	Insulator	MEV65112101	COMPLEX LGD855.A6D2TN ZZ:Without Color -	
5	MDS02	Gasket	MDS64970301	COMPLEX LGD855.A6D2TN ZY:Color Unfixed -	
5	MDS03	Gasket	MDS64910701	COMPLEX LGVS985.AVRZTN ZY:Color Unfixed -	
5	MDS04	Gasket	MDS64814001	COMPLEX LGF400L.ALGTWH SV:SILVER SILVER -	
5	MDJ00	Filter	MDJ63984701	COMPLEX LGF400L.ALGTWH ZZ:Without Color -	
5	MDJ01	Filter	MDJ63984601	COMPLEX LGF400L.ALGTWH ZZ:Without Color -	
5	ABM00	Can Assembly,Shield	ABM74416701	LGD855.ADEUWH ZY:Color Unfixed -	
6	MEV000000	Insulator	MEV65071001	COMPLEX LGD855.ADEUWH ZY:Color Unfixed -	
6	MBK070300	Can,Shield	MBK63852501	PRESS SUS 0.15 LGD855.ADEUWH ZZ:Without Color -	
5	ABM01	Can Assembly,Shield	ABM74416401	LGVS985.AVRZZY ZY:Color Unfixed -	
6	MEV000000	Insulator	MEV64890801	COMPLEX LGD855.ADEUWH ZZ:Without Color -	
6	MBK070303	Can,Shield	MBK63993401	PRESS STS 0.15 LGVS985.AVRZTN ZY:Color Unfixed -	
6	MDS000002	Gasket	MDS64832801	COMPLEX LGD855.ADEUWH ZY:Color Unfixed -	
6	MDS000000	Gasket	MDS64855101	COMPLEX LGVS985W.AVRZWH ZY:Color Unfixed -	
6	MEV000001	Insulator	MEV64833901	COMPLEX LGVS985.AVRZZY ZY:Color Unfixed -	
6	MBK070300	Can,Shield	MBK63852901	PRESS SUS 0.15 LGVS985.AVRZZY ZZ:Without Color -	
6	MBK070301	Can,Shield	MBK64052901	PRESS STS 0.15 LGD855.ADEUWH ZY:Color Unfixed -	
6	MBK070302	Can,Shield	MBK63993301	PRESS STS 0.15 LGD855.ADEUWH ZY:Color Unfixed -	
3	ACQ063300	Cover Assembly,Rear	ACQ87172341	LGVS985W.AVRZWH WH:WHITE WHITE -	
4	ACQ01	Cover Assembly, Rear(SVC)	ACQ87133541	LGVS985W.AVRZWH WH:WHITE WHITE -	

Level	Location no	Description	P/N	Specification	Remark
5	MDS000000	Gasket	MDS64950101	COMPLEX LGF400L.ALGTWH WH:WHITE WHITE -	
7	MJN00	Tape	MJN68946901	COMPLEX LGF400L.ALGTWH ZZ:Without Color -	
7	ADB00	Dome Assembly,Metal	ADB74258101	LGF400L.ALGTWH WH:WHITE WHITE -	
7	MEV02	Insulator	MEV65014701	COMPLEX LGF400L.ALGTWH ZZ:Without Color -	
7	MJN01	Tape	MJN68907001	COMPLEX LGF400L.ALGTWH ZZ:Without Color -	
7	MJN02	Tape	MJN68947001	COMPLEX LGF400L.ALGTWH ZZ:Without Color -	
5	MEV000001	Insulator	MEV65110801	COMPLEX LGF400L.ALGTWH WH:WHITE WHITE -	
5	MFB029600	Lens,Flash	MFB63432901	MOLD PC LGF400L.ALGTWH ZZ:Without Color -	
5	MFB029601	Lens,Flash	MFB63592901	MOLD PC LGF400L.ALGTWH BK:BLACK BLACK -	
5	MHK000000	Sheet	MHK64745102	COMPLEX LGD855.ADEUWH ZY:Color Unfixed -	
5	MJN089300	Tape,Window	MJN68868301	COMPLEX LGF400L.ALGTWH ZZ:Without Color -	
5	MJN04	Tape,Protect	MJN68927001	COMPLEX LGF400L.ALGTWH ZZ:Without Color -	
5	MJN061101	Tape,Protect	MJN69248001	COMPLEX LGD855.A6D2TN ZZ:Without Color -	
5	MKC009400	Window,Camera	MKC64978811	CUTTING GLASS LGD855.ADEUWH ZY:Color Unfixed -	
5	ABH00	Button Assembly	ABH74999601	LGF400L.ALGTWH ZY:Color Unfixed -	
6	MBL000000	Cap	MBL66117701	MOLD RUBBER SILICON LGF400L.ALGTWH ZZ:Without Color -	
6	MBG000001	Button	MBG65323001	CUTTING AL LGF400L.ALGTWH WH:WHITE WHITE -	
6	MBG000000	Button	MBG65303201	MOLD PC LGF400L.ALGTWH WH:WHITE WHITE -	
6	MJN05	Tape,Protect	MJN69187401	COMPLEX LGF400L.ALGTWH ZZ:Without Color -	
5	MCQ000001	Damper	MCQ67705301	COMPLEX LGF400L.ALGTWH BK:BLACK BLACK -	
5	MCQ000000	Damper	MCQ67685201	COMPLEX LGF400L.ALGTWH BK:BLACK BLACK -	
5	MCQ009400	Damper,Camera	MCQ67685101	COMPLEX LGF400L.ALGTWH BK:BLACK BLACK -	
5	FAB010000	Screw,Machine	GMEY0012901	GMEY0012901 FH + 1.4mM 2.5mM MSWR NI PLT N - LG ELECTRONICS INC.	

Level	Location no	Description	P/N	Specification	Remark
5	ACW000000	Decor Assembly	ACW74417201	LGF400L.ALGTWH WH:WHITE WHITE -	
6	MCR000000	Decor	MCR65447201	MOLD PC LGF400L.ALGTWH WH:WHITE WHITE -	
6	MBF000000	Bush	MBF63223801	COMPLEX LGF350L.ALGTWH ZZ:Without Color -	
5	ACQ063400	Cover Assembly, Rear(Sub)	ACQ87133101	LGD855.ADEUWH WH:WHITE WHITE -	
6	MBF000000	Bush	MBF63223801	COMPLEX LGF350L.ALGTWH ZZ:Without Color -	
6	MCK063300	Cover,Rear	MCK68105501	MOLD PC LGD855.ADEUWH WH:WHITE WHITE -	
6	MET099500	Insert,Nut	MICE0016903	COMPLEX MECH_COMMON ZZ:Without Color -	
5	MEV000000	Insulator	MEV65053801	COMPLEX LGF400L.ALGTWH WH:WHITE WHITE -	
3	FAB020000	Screw,Tapping	FAB32218901	BH + 1 2.7M 3.5M NI PLT NI	
3	FAB00	Screw,Machine	GMEY0014301	GMEY0014301 BH + 1.4mM 3.5mM MSWR NI PLT N - KUMGANG SCREW CO., LTD	
2	MEZ00	Label,Approval	MEZ64689301	COMPLEX LGVS930.AVRZBK WA:White -	
1	AGF000000	Package Assembly	AGF77738601	LGAS985.ABPTWH ZZ:Without Color AS985 BPT Package(800)	
2	MAY047100	Box,Master	MAY66810301	COMPLEX LGVS985.AVRZTN ZZ:Without Color VS985 VRZ Master Box_1/10	
2	MCQ007000	Damper,Box	MCQ68106201	COMPLEX LGVS985.AVRZTN ZZ:Without Color G3 ACC Pad	
2	MHR007000	Sleeve,Box	MHR62873201	COMPLEX LGAS985.ABPTWH ZZ:Without Color AS985 Box Sleeve_	
2	MEZ047201	Label,Master Box	MLAJ0004201	PRINTING LG-VX6100 SV ZZ:Without Color New_TDR_Shipping Label GSM,CDMA_pallet label	
2	MEZ047200	Label,Master Box	MLAJ0004402	PRINTING CG300 CGR DG ZZ:Without Color LABEL MASTER BOX(for CGR TDR 2VER. mbox_label) GSM standard_master box label	
2	MEZ084100	Label,Unit Box	MLAQ0017704	PRINTING LGVS980.AVRZBK ZZ:Without Color Unit Box barcode label (76*40)	
2	MAY084001	Box,Unit	MAY66750402	COMPLEX LGVS985.AVRZTN ZZ:Without Color VS985 Lower Box	
2	MAY084000	Box,Unit	MAY66750401	COMPLEX LGVS985.AVRZTN ZZ:Without Color VS985 Upper Box	

Level	Location no	Description	P/N	Specification	Remark
2	MEZ000000	Label	MLAZ0050901	COMPLEX KU990.AGBRBK ZZ:Without Color Battery Warning Label (Lithium ion Battery Label)	
2	AGJ000000	Pallet Assembly	AGJ73998301	LGAS985.ABPTWH ZZ:Without Color AS985 BPT Palletizing(800)	
3	MCQ007000	Damper,Box	MCQ68106301	COMPLEX LGVS985.AVRZTN ZZ:Without Color VS985 Pallet Angle_4/800	
3	MBL007000	Cap,Box	MBL66277201	COMPLEX LGVS985.AVRZTN ZZ:Without Color VS985 Pallet CAP_2/800	
3	MCQ007002	Damper,Box	MCQ68145801	COMPLEX LGVS985.AVRZTN ZZ:Without Color VS985 Pallet Sleeve_1/800	
3	MGA000000	Pallet	MPCY0005202	COMPLEX LG-TM520 ZZ:Without Color -	
1	AAD000000	Addition Assembly	AAD87050504	LGAS985.ABPTWH WH:WHITE WHITE VS985W Addition Assembly Create	
2	ACQ00	Cover Assembly,Battery	ACQ87133306	LGAS985.ABPTWH WH:WHITE WHITE -	
3	MHK000001	Sheet	MHK64688201	COMPLEX LGVS985.AVRZTN ZZ:Without Color -	
3	MCK004100	Cover,Battery	MCK68145206	MOLD PC+ABS LGAS985.ABPTWH WH:WHITE WHITE -	
3	MHK000000	Sheet	MHK64425501	COMPLEX LGF400L.ALGTWH ZZ:Without Color -	
3	MJN061100	Tape,Protect	MJN68927101	COMPLEX LGF400L.ALGTWH ZY:Color Unfixed -	
2	AFN053800	Manual Assembly, Operation	AFN76812401	LGAS985.ABPTWH ZZ:Without Color Manual assy of AS985	

11.2 Replacement Parts <Main component>

Note: This Chapterisused for reference, Part order is ordered by SBOM standard on GCSC

Level	Location no	Description	P/N	Specification	Remark
4	EAB00	Receiver	EAB63268701	EMR1206SHP1 50mW 32OHM 107DB 100HZTO7KHZ PIN - EM-TECH	
4	EAG00	Jack,Phone	EAG63849801	04-9809-005-001-868+ 5P 4P ANGLE TR 3.5M BLACK 5P Side Contact KYOCERA CONNECTOR KOREA SALES CO.,LTD.	
5	EAT130000	Module,Hybrid Touch LCD	EAT62173901	LH550QH1-SD02 CAPACITIVE TOUCH G1F Synaptics S528A1 100hz OCR 0.15mm 5.5inch QHD(2560X1440) BtoB - LG Display Co. Ltd.	
4	EAU00	Motor,DC	EAU62004401	WHVM-1030QSS 2V 40mA 0A 12KRPM 12KRPM 60mSEC 0GF.CM 29OHM WOOSUNG G&T CO.,LTD	
4	EBP00	Camera Module	EBP61801702	CUDA-Y472B CUDA-Y472B 13M OIS, SONY IMX135 30FPS, FPC 90deg,10x15.5x5.7t, SEKONIX Lens LG INNOTEK CO., LTD	
4	EBP01	Camera Module	EBP62061901	C2FA-Y493A C2FA-Y493A Front IMX208 2.1M 0degree 4P CSP LG INNOTEK CO., LTD	
4	EBR00	PCB Assembly,Flexible	EBR79252401	LGVS985.AVRZTN 1.0 Flexible	
5	EBR070400	PCB Assembly, Flexible,SMT	EBR79252501	LGVS985.AVRZTN 1.0 Flexible	
6	EBR070200	PCB Assembly, Flexible, SMT Bottom	EBR79230401	LGVS985.AVRZTN 1.0 Flexible	
7	ANT100 ANT101	C-Clip	EAG63730501	TE 1.1H C-CLIP 1P ANT TERMINAL STRAIGHT SMD T/REEL AU 2.5 X 1.0X 1.1(L X W X H) SERVEONE CO., LTD.	
7	C100 C103	Capacitor,Ceramic, Chip	ECZH0000813	C1005C0G1H101JT 100pF 5% 50V C0G - 55TO+125C 1005 R/TP - TDK KOREA COOPERATION	
6	EBR070300	PCB Assembly, Flexible,SMT Top	EBR79230301	LGVS985.AVRZTN 1.0 Flexible	
7	EAX010100	PCB,Sub	EAX66102901	LGVS985.AVRZTN 1.0 FR-4 Multi 2 0.4 Sub	
3	EBR01	PCB Assembly,Main	EBR78738604	LGAS985.ABPTWH 1.0 Main	

Level	Location no	Description	P/N	Specification	Remark
4	EBR071800	PCB Assembly, Main,SMT	EBR78718404	LGAS985.ABPTWH 1.0 Main	
5	EBR071600	PCB Assembly, Main,SMT Bottom	EBR78738801	LGVS985.AVRZTN 1.4 Main	
6	U6420	IC,Comparator	EAN63149301	MAX14704 3.0~5.5V 0.8mA(MAX) COMPARATOR WLP R/TP 12P - MAXIM INTEGRATED PRODUCTS INC.	
6	L1161	Capacitor (HighFrequency), Ceramic,Chip	EAE62923401	GRM1555C1H1R8C_H 1.8pF 0.25PF 50V C0G - 55TO+125C 1005 R/TP 1.0 L:1.0+-0.05 W:0.5+-0.05 T:0.5+-0.05 MURATA MANUFACTURING CO.,LTD.	
6	R6424	Resistor,Chip	ERHZ0000537	MCR01MZP5F6803 680KOHM 1% 1/16W 1005 R/TP - ROHM.	
6	R4752	Resistor,Chip	ERHY0009547	MCR006YZPF2003 200KOHM 1% 1/20W 0603 R/TP - ROHM.	
6	C6402	Capacitor,Ceramic, Chip	ECCH0009105	C0603C0G1H820JT00NN 82pF 5% 50V NP0 - 55TO+125C 0603 R/TP - - TDK CORPORATION	
6	C1102	Inductor,Multilayer, Chip	EAP62227201	LG HK 0603 1N8S-T 1.8NH 0.3NH - 380mA - - 0.16OHM 10GHZ 4 SHIELD - 0.6X0.3X0.3MM R/TP TAIYO YUDEN CO.,LTD	
6	R4754	Resistor,Chip	ERHY0009550	MCR006YZPF4702 47KOHM 1% 1/20W 0603 R/TP - ROHM.	
6	C18008	Capacitor,Ceramic, Chip	ECZH0000849	C1005C0G1H201JT000F 200pF 5% 50V NP0 - 55TO+125C 1005 R/TP - TDK KOREA COOPERATION	
6	U8100	IC,Gyro Sensor	EAN62826901	MPU-6515 Accelerometer embedded Gyro Sensor 3.0x3.0x0.9 QFN R/TP 24P One Chip Solution INVENSENSE	
6	L95102	Inductor,Multilayer, Chip	EAP62886001	LQP03TG2N0B02D 2NH 0.1NH - 450mA - - 0.25OHM 12.5GHZ 13 SHIELD - 0.6X0.3X0.3MM R/TP MURATA MANUFACTURING CO.,LTD.	
6	C18007	Capacitor,Ceramic, Chip	ECCH0000147	MCH155CN222KK 2.2nF 10% 50V X7R - 55TO+125C 1005 R/TP - ROHM.	
6	C95107	Capacitor,Ceramic, Chip	ECCH0009208	GRM0335C1ER50C 0.5pF 0.25PF 25V X7R - 55TO+125C 0603 R/TP - MURATA MANUFACTURING CO.,LTD.	

Level	Location no	Description	P/N	Specification	Remark
6	D11004 D11005 D11006 D11007 VA9100	Varistor	SEVY0005402	ICVS0505500FR 5.6V 0% 50F 1.0*0.5*0.55 - SMD R/TP INNOCHIPS TECHNOLOGY	
6	ZD7400	Varistor	EAF61650701	LXES15AAA1-117 15V 25% 0.1pF 1.0X0.5X0.33 mm IEC61000-4-2 (ESD) level #4 SMD R/TP MURATA MANUFACTURING CO.,LTD.	
6	C2331 C2332 C2333 C2334	Capacitor,Ceramic, Chip	ECCH0017501	CL10A226MQ8NRNE 22uF 20% 6.3V X5R - 55TO+85C 1608 R/TP 0.8MM - SAMSUNG ELECTRO-MECHANICS CO., LTD.	
6	R2106 R2107 R2110 R2111 R2112 R2113 R2114 R2115 R6116	Resistor,Chip	ERHY0009516	MCR006YZPJ222 2.2KOHM 5% 1/20W 0603 R/TP - ROHM.	
6	D11000 D11001 D11002	Diode,TVS	EAH62033201	UCLAMP3311Z 3.3V 3.65V min. 7.5V 4A 30W SLP0603P2X3A R/TP 2P 1 SEMTECH INTERNATIONAL AG	

Level	Location no	Description	P/N	Specification	Remark
6	C2305 C2306 C2307 C2308 C2309 C2310 C2311 C2312 C2350 C2352 C2354 C2377 C2378 C2379 C2399 C3200 C4127 C4143 C4201 C7101 C7200 C7900 C7910 C7913 C9501 C9503 C9504	Capacitor,Ceramic, Chip	ECCH0017301	CL03A105MQ3CSNH 0.000001F 20% 6.3V X5R -45TO+85C 0603 R/TP - SAMSUNG ELECTRO-MECHANICS CO., LTD.	
6	FL1400	IC,RF Amplifier	EAN62581401	SFMG2B0D001 1.5~3.1V 0 0 0W 0W 0 0 MCM R/TP 8P Gain : 17.2dB NF : 0.85dB WISOL.CO.,LTD	
6	U7901 U7902	IC,LDO Voltage Regulator	EUSY0407401	RT9032 2.5 to 5.5 ADJ. 0W WDFN R/TP 9P - RICHTEK TECHNOLOGY CORP.	
6	C3201 C3203 C7901	Capacitor,Ceramic, Chip	ECCH0000198	CL05A225MQ5NSNC 2.2uF 20% 6.3V X5R -55TO+85C 1005 R/TP . SAMSUNG ELECTRO-MECHANICS CO., LTD.	
6	C11003 C1559 C1775 C1776 C6103 C6615 C6920 C6921 C6922 C6923 C6924 C6925 C7508 C9100 C9502	Capacitor,Ceramic, Chip	ECZH0025916	GRM0335C1E330J 33pF 5% 25V NP0 -55TO+125C 0603 R/TP - - MURATA MANUFACTURING CO.,LTD.	

Level	Location no	Description	P/N	Specification	Remark
6	FB6610 L6601 L6602 R6114 R6115 R6622	Inductor,Multilayer, Chip	ELCH0001444	0402AF-101XJEW 100NH 5% - 900mA - - 0.16OHM 1.4GHZ 8 NON SHIELD NONE 1.12X0.66X0.66MM R/TP COILCRAFT SINGAPORE PTE LTD.	
6	R1106 R3208 R4103 R4759 R6421	Resistor,Chip	ERHY0009505	MCR006YZPJ103 10KOHM 5% 1/20W 0603 R/TP - ROHM.	
6	C18003 C18009 C18014	Capacitor,Ceramic, Chip	EAE62685601	GRM155R71H223KA12D 22nF 10% 50V X7R - 55TO+125C 1005 R/TP 0.55T max. MURATA MANUFACTURING CO.,LTD.	
6	ANT10002 ANT10003	C-Clip	EAG63652301	2108610-5 1P ANT TERMINAL STRAIGHT SMD T/REEL AU 2.9X1.0X1.4(L X W X H) SERVEONE CO., LTD.	
6	FL7100 FL7101 FL7102 FL7104 FL7105 FL7900 FL7901	Filter,EMI/Power	EAM62630501	ICMEF104P101MFR COMMON MODE NOISE FILTER - 0.0000000000017F 0H SMD R/TP - INNOCHIPS TECHNOLOGY	
6	C5208 C5211 C5213 C5216	Capacitor,Ceramic, Chip	ECCH0000120	MCH155A390J 39pF 5% 50V NP0 -55TO+125C 1005 R/TP - ROHM Semiconductor KOREA CORPORATION	
6	U4900	IC,DC,DC Converter	EAN62735901	TPS61282 2.3V to 4.8V 4.8V max. 0W CSP R/TP 16P Swithcing frequency : 2.7MHz, GPIO interface, CSP(1.705X1.705) TEXAS INSTRUMENTS KOREA LTD, HONGKONG BRANCH.	
6	C11006 C1127 C3202 C3204 C4200 C6101 C6102 C6104 C6105 C6107 C6108 C6210 C7206 C7902 C8501	Capacitor,Ceramic, Chip	ECCH0009101	C0603X5R0J104KT00NN 0.1uF 10% 6.3V X5R - 55TO+85C 0603 R/TP - TDK CORPORATION	

Level	Location no	Description	P/N	Specification	Remark
6	C4902 C7907 C7909 C7912	Capacitor,Ceramic, Chip	EAE62506501	CL05A475MP5NRNC 4.7uF 20% 10V X5R -55TO+85C 1005 R/TP - - SAMSUNG ELECTRO-MECHANICS CO., LTD.	
6	C11004 C11005 C1101 C1129 C1130 C1132 C1142 C1192 C1193 C1773 C1774 C7505 C7506 C7507 C7915 C7916 C7917 C7918 C7919 C7920 C7921	Capacitor,Ceramic, Chip	ECCH0009103	C0603C0G1H101JT00NN 100pF 5% 50V C0G -55TO+125C 0603 R/TP - - TDK CORPORATION	
6	FL2300 FL2301 FL2302 FL2303 FL2304 FL2305 FL2306 FL2307 FL2308 FL2309	Capacitor,Low ESL	EAE63462901	NFM15PC435R0G3D_ 4.3uF -20TO20% 4V X5R -55TO+85C 1005 R/TP Max 0.5T (L:1.0+-0.2 W:0.5+-0.2 T:0.4+-0.1) MURATA MANUFACTURING CO.,LTD.	
6	C10000 C4202 C4204 C4208 C4209 C4210 C4211 C4212 C4213 C6109	Capacitor,Ceramic, Chip	EAE62962301	GRM155R61A225KE95 2.2uF -10TO+10% 10V X5R -55TO+85C 1005 R/TP 0.5 L:1.0+-0.05 W:0.5+-0.05 T:0.5+-0.05 MURATA MANUFACTURING CO.,LTD.	
6	VA7102	Varistor	SEVY0003601	ICVL0505101V150FR 5.6V 0% 100pF 1.0*0.5*0.55 NONE SMD R/TP INNOCHIPS TECHNOLOGY	

Level	Location no	Description	P/N	Specification	Remark
6	C5204 C5218	Capacitor,Ceramic, Chip	ECCH0000143	MCH155CN102KK 1nF 10% 50V X7R -55TO+125C 1005 R/TP - ROHM Semiconductor KOREA CORPORATION	
6	U3200	IC,MCP,eMMC	EAN62992902	THGBMBG8D4KBAIR FLASH 2.7VTO3.6V,1.7VTO1.95V 11.5x13.0x1.0 TR 153P MLC NAND FBGA 32GB eMMC v5.0 (A19nm 64Gb MLC x 4, 11.5x13.0) TOSHIBA ELECTRONICS KOREA CORPORATION	
6	C9102	Capacitor,TA,Poly mer	EAE63724801	TCNS107M006R0250 100uF -20TO20% 6.3V 60UA -55TO+105C 0.25OHM 3.2X1.6X1.2MM NONE SMD R/TP Max 1.2T KYOCERA ELECTRONIC DEVICES HONG KONG LIMITED	
6	C1126 C6207 C6208	Capacitor,Ceramic, Chip	ECCH0009104	C0603C0G1H330JT00NN 33pF 5% 50V C0G -55TO+125C 0603 R/TP - - TDK CORPORATION	
6	R6423	Resistor,Chip	ERHY0009586	MCR006YZPF2201 2.2KOHM 1% 1/20W 0603 R/TP - ROHM.	
6	C4750 C7103 C7104	Capacitor,Ceramic, Chip	EAE62505701	CL10A105KB8NNNC 1uF 10% 50V X5R -55TO+85C 1608 R/TP 0.9T max. - SAMSUNG ELECTRO-MECHANICS CO., LTD.	
6	R6111	Resistor,Chip	ERHZ0003901	RC2012FR100CS 0.1OHM 1% 1/8W 2012 R/TP - SAMSUNG ELECTRO-MECHANICS CO., LTD.	
6	D9200	Diode,TVS	EAH61872601	PESD12VS1UA 12V 13.3V min. 19V 22.5A 360mW SOD323 R/TP 2P 1 NXP Semiconductors	
6	R11005 R11007	Resistor,Chip	ERHY0024601	RC0603J151CS 150OHM 5% 1/20W 0603 R/TP - SAMSUNG ELECTRO-MECHANICS CO., LTD.	
6	R18003 R4905 R4906 R7200 R9500	Resistor,Chip	ERHZ0000405	MCR01MZP5J103 10KOHM 5% 1/16W 1005 R/TP - ROHM.	
6	CN9100	Connector,Termina l Block	EAG63530401	KQ03L3-4R 4P 2.50MM STRAIGHT DIP T/REEL - HIROSE KOREA CO.,LTD	
6	ANT18000 ANT18001 CN5200 CN5202	C-Clip	EAG63651901	2108609-5 1P ANT TERMINAL STRAIGHT SMD T/REEL AU 2.9 X 1.0 X 3.0(L X W X H) SERVEONE CO., LTD.	
6	U6100	IC,Audio Codec	EAN62648101	WCD9320 999 999W NSP R/TP 84P MSM8974 Referenced QCT CODEC QUALCOMM INCORPORATED.	
6	R1502 R1503	Resistor,Chip	EBC62236101	RC0603J821C 820OHM 5% 1/20W 0603 R/TP - SAMSUNG ELECTRO-MECHANICS CO., LTD.	

Level	Location no	Description	P/N	Specification	Remark
6	C6201 C6926	Capacitor,Ceramic, Chip	EAE62722601	CL05A104KA5NNNC 0.1uF 10% 25V X5R - 55TO+85C 1005 R/TP 0.55 max. - SAMSUNG ELECTRO-MECHANICS CO., LTD.	
6	R18009 R3207 R6100 R6101 R6102 R6106 R6109 R6620 R6621 R7201	Resistor,Chip	ERHY0009501	MCR006YZPJ000 0OHM 5% 1/20W 0603 R/TP - ROHM.	
6	L1127	Inductor,Multilayer, Chip	EAP62226201	LQP03TG4N7J02D 4.7NH 5% - 250mA - - 0.72OHM 6GHZ 12 SHIELD - 0.6X0.3X0.3MM R/TP MURATA MANUFACTURING CO.,LTD.	
6	MIC6920 MIC6921 MIC6923	Microphone,Condenser	EAB62909301	SPH0611LR5H -38DB 400OHM OMNI 1.5 TO 3.6V 3.5 x 2.65 x 0.98T SMD KNOWLES ACOUSTICS	
6	C6616 C6618 C6621	Capacitor,Ceramic, Chip	ECCH0009106	C0603X7R1C103KT 10nF 10% 10V X7R - 55TO+125C 0603 R/TP - TDK CORPORATION	
6	C1135	Capacitor,Ceramic, Chip	ECCH0009502	GRM0335C1E1R5CD01D+A02 1.5pF 0.25PF 25V NP0 -55TO+125C 0603 R/TP - MURATA MANUFACTURING CO.,LTD.	
6	ZD9100	Diode,TVS	EDTY0012102	PESD5V0V1BL 5V 5.8V min. 12.5V 4.8A 45W SOD-882 R/TP 2P 1 STC CORP.	
6	C6202 C7100 C7102 C9101	Capacitor,Ceramic, Chip	EAE62502901	CL05A106MP5NUNC 10uF 20% 10V X5R - 55TO+85C 1005 R/TP 0.55T max. SAMSUNG ELECTRO-MECHANICS CO., LTD.	
6	C2102 C2103 C4109 C6929	Capacitor,Ceramic, Chip	EAE62286801	CL03A104KP3NNNC 0.0000001F 10% 10V X5R - 55TO+85C 0603 R/TP 0.3 - SAMSUNG ELECTRO-MECHANICS CO., LTD.	
6	C4203	Capacitor,Ceramic, Chip	EAE62542701	CL21A226MPCLRNC 22uF 20% 10V X5R - 55TO+85C 2012 R/TP 0.95T max. - SAMSUNG ELECTRO-MECHANICS CO., LTD.	
6	R9107	Resistor,Chip	ERHY0009526	MCR006YZPJ472 4.7KOHM 5% 1/20W 0603 R/TP - ROHM.	

Level	Location no	Description	P/N	Specification	Remark
6	ANT1102 ANT1103 ANT1104 ANT1105 ANT1106 ANT1107	C-Clip	EAG63910001	1201-01A 1P ANT TERMINAL STRAIGHT SMD REEL AU 2.6X1.0X0.9(LXWXH) SERVEONE CO., LTD.	
6	FB6100 FB6920 FB6921 FB6922	Filter,Bead	SFBH0008102	BLM15HD182SN1D 1800 ohm 1.0X0.5X0.5 25% 2.2 ohm 0.2A SMD R/TP 2P 0 MURATA MANUFACTURING CO.,LTD.	
6	C2391 C2392 C4205 C4206 C4207	Capacitor,Ceramic, Chip	EAE62767801	JDK212BBJ476MD 47uF -20TO20% 6.3V X5R - 55TO+85C 2012 R/TP 0.85T - TAIYO YUDEN CO.,LTD	
6	R9505	Resistor,Chip	EBC61856101	RC0201JR-0722RL 22OHM 5% 1/20W 0603 R/TP - YAGEO CORPORATION	
6	U10000	IC,LDO Voltage Regulator	EAN62732201	RP115L211B-E2 under 5.25V 2.1 0W DFN R/TP 8P (1.6x1.2x0.4) stand by current : 3uA RICOH COMPANY, LTD.	
6	S9500	Card Socket	EAG63310801	1041681610 Micro-SD, UIMDupliSocket 16P STRAIGHT DIP T/REEL - MOLEX	
6	C4903 C6112 C6113 C6203 C6204 C6420 C6421 C7404	Capacitor,Ceramic, Chip	EAE62762301	CL03A105MP3NSNC 1uF 20% 10V X5R - 55TO+85C 0603 R/TP 0.33 MM - SAMSUNG ELECTRO-MECHANICS CO., LTD.	
6	R18008	Resistor,Chip	ERHY0000150	RC1005F753CS 75KOHM 1% 1/16W 1005 R/TP - SAMSUNG ELECTRO-MECHANICS CO., LTD.	
6	C18006	Capacitor,Ceramic, Chip	ECZH0001412	C1608X7R1H473KT 47nF 10% 50V X7R - 55TO+125C 1608 R/TP - - TDK KOREA COOPERATION	
6	U8200	IC,Geomagnetic Sensor	EAN62986601	HSCDTD008A 3 Axis Geomagnetic Sensor,measurable range : +-24G, ADC: 12bit, sensitivity : 0.15uT 1.6X1.6X0.7 LGA P/TP 8P - ALPS ELECTRIC KOREA CO.,LTD.	
6	C100 C103	Capacitor,Ceramic, Chip	ECZH0000813	C1005C0G1H101JT 100pF 5% 50V C0G - 55TO+125C 1005 R/TP - TDK KOREA COOPERATION	
6	R2116 R2117	Resistor,Chip	ERHY0009306	MCR006YZPF1801 1.8KOHM 1% 1/20W 0603 R/TP - ROHM.	

Level	Location no	Description	P/N	Specification	Remark
6	R18010	Resistor,Chip	ERHY0000193	RC1005F270CS 27OHM 1% 1/16W 1005 R/TP - SAMSUNG ELECTRO-MECHANICS CO., LTD.	
6	FL4750	Filter,EMI/Power	EAM62790301	NFM18PC225B1A3D_ EMI - 0.0000022F 0H SMD R/TP size : 1.6x0.8x0.6 (3 terminal cap) MURATA MANUFACTURING CO.,LTD.	
6	C7903 C7904 C7914	Capacitor,Ceramic, Chip	EAE62726601	CL03A225MQ3CRNC 2.2uF -20TO20% 6.3V X5R - 55TO+85C 0603 R/TP 0.3T - SAMSUNG ELECTRO-MECHANICS CO., LTD.	
6	CN9200	Connector,I/O	EAG63430401	GU07L-11P-E2000 11P 0.60MM STRAIGHT RECEPTACLE DIP R/TP Normal Offset LS Mtron Ltd.	
6	R4755 R4903 R7101	Resistor,Chip	ERHY0009506	MCR006YZPJ104 100KOHM 5% 1/20W 0603 R/TP - ROHM.	
6	R4608 R4609 R4610 R9106	Resistor,Chip	ERHY0009543	MCR006YZPJ121 120OHM 5% 1/20W 0603 R/TP - ROHM.	
6	R7612	Resistor,Chip	ERHZ0000701	MCR03EZP5J000 0OHM 5% 1/10W 1608 R/TP - ROHM.	
6	L4900	Inductor,Wire Wound,Chip	EAP62327801	PIFE20161B-R47MS-39 470NH 20% - 3.5A 3.5 3.5 0.036OHM - - SHIELD 2.0X1.6X1.2 MM - R/TP CYNTEC CO., LTD.	
6	C9105	Capacitor,Ceramic, Chip	ECCH0000161	MCH153CN333KK 33nF 10% 16V X7R -55TO+125C 1005 R/TP - - ROHM Semiconductor KOREA CORPORATION	
6	C18001 C18011	Capacitor,Ceramic, Chip	EAE62685201	C1005X5R1E104K 0.1uF 10% 25V X5R -55TO+85C 1005 R/TP 0.55T max. TDK KOREA COOPERATION	
6	C1116	Inductor,Multilayer, Chip	EAP62227701	LG HK 0603 8N2J-T 8.2NH 5% - 230mA - - 0.45OHM 3.4GHZ 5 SHIELD - 0.6X0.3X0.3MM R/TP TAIYO YUDEN CO.,LTD	
6	FL7400	Filter,EMI/Power	SFEY0015901	ICMEF214P101MFR ICMEF214P101MFR ICMEF214P101MFR,SMD ,ESD Common mode Filter INNOCHIPS TECHNOLOGY INNOCHIPS TECHNOLOGY	
6	FB6201 FB6202	Filter,Bead	EAM62691601	MPZ1608S600AT 60 1.6x0.8x0.6 25% - 3.5 SMD R/TP 2P - TDK KOREA COOPERATION	
6	C8101	Capacitor,Ceramic, Chip	ECCH0000155	MCH153CN103KK 10nF 10% 16V X7R -55TO+125C 1005 R/TP - ROHM Semiconductor KOREA CORPORATION	

Level	Location no	Description	P/N	Specification	Remark
6	R9102	Resistor,Chip	ERHY0035601	PMR10EZPFU10L0 0.01OHM 1% 1/2W 2012 R/TP - ROHM.	
6	U4200	IC,PMIC	EAN62667201	PM8841 to 5.5V adj 0W CSP R/TP 98P - QUALCOMM INCORPORATED.	
6	R2121	Resistor,Chip	EBC62581901	RC0201FR-0733RL 33OHM 1% 1/20W 0603 R/TP - YAGEO CORPORATION	
6	R6422 R9501	Resistor,Chip	ERHY0009507	MCR006YZPJ105 1MOHM 5% 1/20W 0603 R/TP - ROHM.	
6	R11003 R11004	Resistor,Chip	ERHY0009527	MCR006YZPJ473 47KOHM 5% 1/20W 0603 R/TP - ROHM.	
6	C4900	Capacitor,Ceramic, Chip	EAE62522101	CL10A226MP8NUNE 22uF 20% 10V X5R - 55TO+85C 1608 R/TP 1.05T max. - SAMSUNG ELECTRO-MECHANICS CO., LTD.	
6	L11001 L11002 L1103 L1109 L1121 L1125 L1145	Inductor,Multilayer, Chip	EAP61866701	LG HK0603 82NJ-T 82NH 5% - 70mA - - 3.37OHM 1GHZ 4 SHIELD 0 0.6X0.3X0.3MM R/TP TAIYO YUDEN CO.,LTD	
6	FL9201 FL9202	Filter,LCR	EAM62451101	ICMEF112P350MFR COMMON MODE NOISE FILTER 0HZ 0F 0H SMD R/TP Common mode Impedance at 100MHz : 35ohm+-30%, DC Resistance Max :3.0ohm INNOCHIPS TECHNOLOGY	
6	FB4402 FB6101	Filter,Bead	EAM62633801	MPZ1608S601AT000 600 1.6X0.8X0.8 25% 0.15 1 SMD R/TP 2P - TDK KOREA COOPERATION	
6	U8500	IC,Acceleration Sensor	EAN62972701	HSPPAD038A Pressure sensor,300~1100hPa, relative accuracy 0.15hPa,absolute accuracy 2hPa 2.5x2.5.0.8 QFN R/TP 6P - ALPS ELECTRIC KOREA CO.,LTD.	
6	R1104	Resistor,Chip	ERHZ0000286	MCR01MZP5F4701 4.7KOHM 1% 1/16W 1005 R/TP - ROHM.	
6	R9104	Resistor,Chip	ERHZ0000331	RC1005F114CS 110KOHM 1% 1/16W 1005 R/TP - SAMSUNG ELECTRO-MECHANICS CO., LTD.	
6	C10001 C4129 C6209 C7405 C7906 C7908 C7911	Capacitor,Ceramic, Chip	ECCH0017601	CL05A475MQ5NRNC 4.7uF 20% 6.3V X5R - 55TO+85C 1005 R/TP 0.5MM - SAMSUNG ELECTRO-MECHANICS CO., LTD.	

Level	Location no	Description	P/N	Specification	Remark
6	C1157	Inductor,Multilayer, Chip	EAP62546201	LQP03TN1N8B02D 1.8NH 0.1NH - 600mA - - 0.15OHM 15GHZ 14 SHIELD - 0.6X0.3X0.3MM R/TP MURATA MANUFACTURING CO.,LTD.	
6	C6106	Capacitor,Ceramic, Chip	ECCH0006201	C1608X5R0J475KT000N 4.7uF 10% 6.3V X5R - 55TO+85C 1608 R/TP - TDK CORPORATION	
6	R5203 R5206	Resistor,Chip	ERHZ0000404	MCR01MZP5J102 1KOHM 5% 1/16W 1005 R/TP - ROHM.	
6	CN11002 CN11003	Terminal Block	ENZY0025801	KQ13L2-6R KQ13L2-6R,6,1.0 mm,ETC6.6x4x1.35(t),Stroke:-0.65,Touch window Contact CNT HIROSE KOREA CO.,LTD	
6	FB1102 FB1103	Filter,Bead	EAM62252001	BLM03HG102SN1D 1000 ohm 0.6X0.3X0.33 25% 2.6 ohm 0.125A SMD R/TP 2P 0 MURATA MANUFACTURING CO.,LTD.	
6	C9200	Capacitor,Ceramic, Chip	ECCH0000115	MCH155A220JK 22pF 5% 50V NP0 -55TO+125C 1005 R/TP - ROHM Semiconductor KOREA CORPORATION	
6	R18007	Resistor,Chip	ERHZ0000293	MCR01MZP5F5100 510OHM 1% 1/16W 1005 R/TP - ROHM.	
6	CN7100	Connector,BtoB	EAG63291501	BM10NB(0.8)-44DS-0.4V 44P 0.40MM STRAIGHT FEMALE SMD R/TP 800mM - HIROSE KOREA CO.,LTD	
6	L1101	Inductor,Multilayer, Chip	EAP62526201	LQP03TN10NH02D 10NH 3% - 250mA - - 0.7OHM 3.2GHZ 14 SHIELD - 0.6X0.3X0.3MM R/TP MURATA MANUFACTURING CO.,LTD.	
6	U4750 U4751	IC,Over Voltage Protection	EAN62773901	MAX14670EWL+T up to 28V adj 0W CSP R/TP 15P - MAXIM INTEGRATED PRODUCTS INC.	
6	CN7200	Connector,BtoB	ENBY0051001	GB042-10S-H10-E3000 10P 0.4MM STRAIGHT FEMALE SMD R/TP 1M - LS Mtron Ltd.	
6	L4200 L4201 L4203	Inductor,Multilayer, Chip	EAP62787001	MCP2016DR47 470NH 20% - 3.2A 3.2 3.5 0.045OHM 0HZ - SHIELD - 2.0X1.6X1.0MM R/TP FDK CORPORATION.	
6	D9100	Diode,TVS	EDTY0010002	PESD5V0S1UL 5V 6.4V min. 20V 15A 150W SOD-882 R/TP 2P 1 STC CORP.	
6	FL1753	Filter,Separator, Switch	EAM62730001	XMSS1R6G0PA-001TMP 0.2~0.5dB 17~35dB 20dBm - MURATA MANUFACTURING CO.,LTD.	
6	R6118 R6119	Resistor,Chip	EBC62036001	RC0201FR-0710RL 10OHM 1% 1/20W 0603 R/TP - YAGEO CORPORATION	

Level	Location no	Description	P/N	Specification	Remark
6	L4204 L4205 L4206 L4207	Inductor,Multilayer, Chip	EAP62545901	MIPSZ2016DR24FHS 240NH 20% - 4A 4 4 0.022OHM 0HZ - SHIELD - 2.0X1.6X1.0 MM R/TP FDK CORPORATION.	
6	ZD4500 ZD4501	Diode,TVS	EDTY0009101	ESD9X5.0ST5G 5V 6.2 12.3V 8.7A 107W SOD528 R/TP 2P 1 ON SEMICONDUCTOR	
6	FL1102 FL1751	Coupler,RF Directional	ECA30240001	LDJ18829M24AD011 1.6x0.8x0.7t SMD COUPLER 1694MHz 1992MHz (698~2690MHz) SMD R/TP 22.4 to 25.7 0.16 26 - MURATA MANUFACTURING CO.,LTD.	
6	VA7101	Varistor	SEVY0010501	IECS0505C040FR 10V 0% 4E-12F 1.0x0.5x0.3 IEC61000-4-1 (ESD) level #4 SMD R/TP INNOCHIPS TECHNOLOGY	
6	C18000 C18016 C4755 C4756	Capacitor,Ceramic, Chip	EAE62685301	CL05A105KA5NQNC 1uF 10% 25V X5R -55TO+85C 1005 R/TP 0.6T max. Samsung(1.0+-0.1 0.5+-0.1 0.5+-0.1) Murata (1.0+-0.05 0.5+-0.05 0.5+-0.05) SAMSUNG ELECTRO-MECHANICS CO., LTD.	
6	C6927	Capacitor,Ceramic, Chip	EAE63004901	GRM219R61C226ME15 22uF -20TO20% 16V X5R -55TO+85C 2012 R/TP Max 1T L:2.0+-0.2 W:1.25+-0.2 T:0.85+-0.15 MURATA MANUFACTURING CO.,LTD.	
6	C6116	Capacitor,Ceramic, Chip	ECCH0004904	GRM155R60J105K 1uF 10% 6.3V X5R -55TO+85C 1005 R/TP - MURATA MANUFACTURING CO.,LTD.	
6	R4111 R4112	Resistor,Chip	ERHZ0000270	MCR01MZP5F33R0 33OHM 1% 1/16W 1005 R/TP - ROHM.	
6	R1501	Resistor,Chip	ERHY0040202	RC0201FR-074R7L 4.7OHM 1% 1/20W 0603 R/TP - YAGEO CORPORATION	
6	U6200	IC,Speaker Amplifier	EAN63029101	CS35L32 999 999W WLCSP R/TP 30P - CIRRUS LOGIC, INC.,	
6	R9105	Resistor,Chip	ERHY0009538	MCR006YZPF1802 18KOHM 1% 1/20W 0603 R/TP - ROHM.	
6	L1120	Inductor,Multilayer, Chip	EAP62227101	LG HK 0603 1N5S-T 1.5H 0.3NH - 430mA - - 0.13OHM 10GHZ 4 SHIELD - 0.6X0.3X0.3MM R/TP TAIYO YUDEN CO.,LTD	
6	C1103 C1115	Capacitor(High Frequency),Ceramic,Chip	EAE62946401	GRM0335C1E3R3C_H 3.3pF 0.25PF 25V C0G -55TO+125C 0603 R/TP 0.3+-0.03 L:0.6+-0.03 W:0.3+-0.03 T:0.3+-0.03 MURATA MANUFACTURING CO.,LTD.	
6	R11006	Resistor,Chip	ERHY0009301	MCR006YZPF1000 100OHM 1% 1/20W 0603 R/TP - ROHM.	

Level	Location no	Description	P/N	Specification	Remark
6	C9103	Capacitor,Ceramic, Chip	ECZH0025917	GRM0335C1E470J 47pF 5% 25V NP0 -55TO+125C 0603 R/TP - MURATA MANUFACTURING CO.,LTD.	
6	FL7902	Filter,EMI/Power	EAM62570201	ICMEF062P900MFR COMMON MODE NOISE FILTER - 0.0000000000017F 0H SMD R/TP - INNOCHIPS TECHNOLOGY	
6	D9502	Varistor	SEVY0005101	ICVL0518050FR 18V 0% 5F 1.0*0.5*0.55 NONE SMD R/TP INNOCHIPS TECHNOLOGY	
6	R4753	Resistor,Chip	ERHY0009511	MCR006YZPJ152 1.5KOHM 5% 1/20W 0603 R/TP - ROHM.	
6	C4901	Capacitor,Ceramic, Chip	ECCH0007804	CL05A225MP5NSNC 2.2uF 20% 10V X5R - 55TO+85C 1005 R/TP 0.5MM - SAMSUNG ELECTRO-MECHANICS CO., LTD.	
6	D4603 D7400 D7900	Diode,TVS	EAH61892901	RCLAMP7522T 5V 6.5V min / 9V typ / 11V max 15V 4A 500mW SLP1007N5T R/TP 5P 3 SEMTECH INTERNATIONAL AG	
6	L6201	Inductor,Wire Wound,Chip	EAP62526501	TFM201610GHM-1R0MTAA 1UH 20% - 3A 3.6 3 0.06OHM - - SHIELD 2.0X1.6X1.0 MM - R/TP TDK KOREA COOPERATION	
6	Q5200	FET	EBK61691601	SSM3K15AMFV N-CHANNEL MOSFET 30V +-20 100mA 6OHM 150mW VESM R/TP 3P TOSHIBA ELECTRONICS KOREA CORPORATION	
6	D7203	Diode,TVS	EAH61794301	ESD5205P6T6G 5V 5.5V min. 10V 2UA 0W SOT-963 R/TP 6P 5 ON SEMICONDUCTOR	
6	L1162	Inductor,Multilayer, Chip	EAP62226901	LG HK 0603 1N0S-T 1NH 0.3NH - 470mA - - 0.11OHM 10GHZ 4 SHIELD - 0.6X0.3X0.3MM R/TP TAIYO YUDEN CO.,LTD	
6	SW1101 SW1102 SW1104 SW1105 SW1106	Connector,RF	EAG63772101	MM8030-2610RK0 NONE STRAIGHT SOCKET SMD T/REEL AU 50OHM 400mDB MURATA MANUFACTURING CO.,LTD.	
6	R18001	Resistor,Chip	ERHZ0000203	MCR01MZP5F1002 10KOHM 1% 1/16W 1005 R/TP - ROHM.	
6	R6615	Wire Pad,Short	SAFP0000401	AX3100 ATL SV_SHIPBACK,MAIN,A	
6	C18010 C18012	Capacitor,Ceramic, Chip	EAE63162401	GRM188R61E106M 10uF -20TO20% 25V X5R - 55TO+85C 1608 R/TP Max 1.0T L:1.6+-0.2 W:0.8+-0.2 T:0.8+-0.2 MURATA MANUFACTURING CO.,LTD.	

Level	Location no	Description	P/N	Specification	Remark
6	C9511 C9512 C9521	Capacitor,Ceramic, Chip	ECCH0009514	MCH032A(AN)100DK 10pF 0.5PF 25V X7R - 55TO+125C 0603 R/TP - ROHM.	
6	VA9500	Diode,TVS	EDTY0012101	PESD5V0F1BL 5.5V 6V min 11V 2.5A - SOD-882 R/TP 2P 1 STC CORP.	
6	R18006	Resistor,Chip	ERHZ0000354	MCR01MZP5F4300 430OHM 1% 1/16W 1005 R/TP - ROHM.	
6	U7900	IC,LDO Voltage Regulator	EAN62768901	RP114K181D-TRB 1.4 to 5.25 1.8 0W DFN R/TP 4P - RICOH COMPANY, LTD.	
6	C8100 C8102	Capacitor,Ceramic, Chip	ECZH0004402	CL05F104ZO5NNNC 0.1uF -20TO+80% 16V Y5V - 30TO+85C 1005 R/TP - - SAMSUNG ELECTRO-MECHANICS CO., LTD.	
6	C18002 C18015	Capacitor,Ceramic, Chip	EAE63162301	GRM188R61H474K 0.47uF -10TO+10% 50V X5R - 55TO+85C 1608 R/TP Max 0.9T L:1.6+-0.1 W:0.8+-0.1 T:0.8+-0.1 MURATA MANUFACTURING CO.,LTD.	
6	CN7900	Connector,BtoB	ENBY0040701	GB042-30S-H10-E3000 30P 0.4MM STRAIGHT FEMALE SMD R/TP 1M - LS Mtron Ltd.	
6	C7905	Capacitor,Ceramic, Chip	ECCH0007805	CL05A106MQ5NUNC 10uF 20% 6.3V X5R - 55TO+85C 1005 R/TP 0.5+-0.05 - SAMSUNG ELECTRO-MECHANICS CO., LTD.	
6	C6111 C8200 C8201	Capacitor,Ceramic, Chip	ECCH0002001	C1005JB0J104KT000F 0.1uF 10% 6.3V X5R - 55TO+85C 1005 R/TP - - TDK CORPORATION	
6	FL1402	Filter,Ceramic	EAM62691501	LFL18829MTCRD627 LPF 829MHZ 698 to 960 MHz SMD R/TP 6P MURATA MANUFACTURING CO.,LTD.	
6	LD4500	Module,Assembly	EAT62233201	LEYRS63A81GW00 Tunable Dual Flash LED Module LG INNOTEK CO., LTD	
6	ANT100 ANT101	C-Clip	EAG63730501	TE 1.1H C-CLIP 1P ANT TERMINAL STRAIGHT SMD T/REEL AU 2.5 X 1.0X 1.1(L X W X H) SERVEONE CO., LTD.	
6	R18004	Resistor,Chip	ERHZ0000407	MCR01MZP5J105 1MOHM 5% 1/16W 1005 R/TP - ROHM.	
6	FL1401	Filter,Separator	EAM62491401	B9839 1.4/2.0 35 , , EPCOS PTE LTD.	
6	C1114	Capacitor (High Frequency), Ceramic,Chip	EAE62946501	GRM0335C1E3R9B_H 3.9pF 0.1PF 25V C0G - 55TO+125C 0603 R/TP 0.3+-0.03 L:0.6+-0.03 W:0.3+-0.03 T:0.3+-0.03 MURATA MANUFACTURING CO.,LTD.	

Level	Location no	Description	P/N	Specification	Remark
6	C1106	Inductor,Multilayer, Chip	EAP62109001	LQP03TN0N6B02D 600PH 0.1NH - 850mA - - 0.07OHM 6GHZ 14 SHIELD - 0.6X0.3X0.3MM R/TP MURATA MANUFACTURING CO.,LTD.	
6	C1128	Capacitor,Ceramic, Chip	ECCH0042007	GRM0335C1E6R8BD01D 6.8 pF,25V,B,C0G,TC,0603,R/TP,0.0000000000068,0.1 PF,25V,C0G,-55TO+125C,0603,R/TP,0.3 mm MURATA MANUFACTURING CO.,LTD.	
6	ANT6000	C-Clip	EAG63613001	2108612-5 1P ANT TERMINAL STRAIGHT SMD T/REEL AU 2.9X1.0X2.05(L X W X H) SERVEONE CO., LTD.	
6	L4202	Inductor,Wire Wound,Chip	EAP62526601	TFM201610GHM-2R2MTAA 2.2UH 20% - 1.9A 2.4 1.9 0.152OHM - - SHIELD 2.0X1.6X1.0MM - R/TP TDK KOREA COOPERATION	
6	R6117	Resistor,Chip	EBC62975901	TNPW040244K2BEED 44.2KOHM 0.1% 1/16W 1005 R/TP - VISHAY INTERTECHNOLOGY ASIA PTE LTD	
6	R11002	Resistor,Chip	ERHY0009311	MCR006YZPF51R0 51OHM 1% 1/20W 0603 R/TP - ROHM.	
6	C18004 C18013	Capacitor,Ceramic, Chip	EAE63381501	CL05B153KA5NNNC 15nF -10TO+10% 25V X7R - 55TO+125C 1005 R/TP Max 0.55T L:1.0+-0.05 W:0.5+-0.05 T:0.5+-0.05 SAMSUNG ELECTRO-MECHANICS CO., LTD.	
6	CN7400	Connector,BtoB	EAG63789801	BM15FR0.8-20DS-0.35V 20P 0.35MM STRAIGHT FEMALE SMD T/REEL 800mM - HIROSE KOREA CO.,LTD	
6	U7303	IC,LDO Voltage Regulator	EUSY0374201	RP103K121D-TR RP103K121D-TR RP103K121D-TR,PLP1010 ,4 ,R/TP ,1.2V 150mA Single LDO High PSRR ver RICOH COMPANY, LTD. RICOH COMPANY, LTD.	
6	R18002	Resistor,Chip	ERHZ0000438	MCR01MZP5J203 20KOHM 5% 1/16W 1005 R/TP - ROHM.	
6	R18000	Resistor,Chip	ERHZ0000323	MCR01MZP5F9102 91KOHM 1% 1/16W 1005 R/TP - ROHM.	
6	C18005	Capacitor,Ceramic, Chip	EAE62966901	CL10B104KB8NNNC_ 100nF -10TO+10% 50V X7R -55TO+125C 1608 R/TP 0.8 L:1.6+-0.1 W:0.8+-0.1 T:0.8+-0.1 SAMSUNG ELECTRO-MECHANICS CO., LTD.	
6	FL1101	Filter,Separator	EAM62910201	DPX202700DT-4162A1 0.5dB@LB / 0.5dB@HB 30dB@LB / 25dB@HB - - TDK CORPORATION	
6	U18000	IC,Charger	EAN63366701	BQ51021YFPR up to Battery voltage ajd 0W CSP R/TP 35P - TEXAS INSTRUMENTS KOREA LTD, HONGKONG BRANCH.	

Level	Location no	Description	P/N	Specification	Remark
6	C2303 C2304	Capacitor,Ceramic, Chip	EAE63582701	CL10A476MQENRBE 47uF -20TO20% 6.3V X5R -55TO+85C 1608 R/TP L:1.6+-0.2, W:0.8+-0.2, T:1.1+-0.1 Max 1.2T, SEMCO Acoustic Noise MLCC THMC SAMSUNG ELECTRO-MECHANICS CO., LTD.	
5	EBR071700	PCB Assembly,Main, SMT Top	EBR78738701	LGVS985.AVRZTN 1.3 Main	
6	U2100	IC,Digital Baseband Processor,4G	EAN63106201	MSM8974AC Quad Krait 2.45GHz,28nm HPM,15x15 Bare Die PoP,2x933 LPDDR3, eMMC5.0, LTE CAT4, CA, HSPA+42Mbps, TD-SCDMA, DOrA/B, 1080@120fps,Adreno330,550MHz NSP R/TP 990P QUALCOMM INCORPORATED.	
6	C1316 L1215	Inductor,Multilayer, Chip	EAP61767701	LQP03TN3N0B02D 3NH 0.1NH - 450mA - - 0.25OHM 6GHZ 14 SHIELD NONE 0.6X0.3X0.3MM R/TP MURATA MANUFACTURING CO.,LTD.	
6	L1155	Inductor,Multilayer, Chip	EAP61866401	LG HK0603 9N1J-T 9.1NH 5% - 220mA - - 0.48OHM 3.2GHZ 5 SHIELD 0 0.6X0.3X0.3MM R/TP TAIYO YUDEN CO.,LTD	
6	L1217	Inductor,Multilayer, Chip	EAP61866501	LG HK0603 4N3S-T 4.3NH 0.3NH - 280mA - - 0.3OHM 5.7GHZ 5 SHIELD 0 0.6X0.3X0.3MM R/TP TAIYO YUDEN CO.,LTD	
6	L1127	Inductor,Multilayer, Chip	EAP62226201	LQP03TG4N7J02D 4.7NH 5% - 250mA - - 0.72OHM 6GHZ 12 SHIELD - 0.6X0.3X0.3MM R/TP MURATA MANUFACTURING CO.,LTD.	
6	L1120	Inductor,Multilayer, Chip	EAP62227101	LG HK 0603 1N5S-T 1.5H 0.3NH - 430mA - - 0.13OHM 10GHZ 4 SHIELD - 0.6X0.3X0.3MM R/TP TAIYO YUDEN CO.,LTD	
6	C1230	Capacitor,Ceramic, Chip	ECCH0009226	GRM0335C1E390J 39pF 5% 25V X7R -55TO+125C 0603 R/TP - MURATA MANUFACTURING CO.,LTD.	
6	C9103	Capacitor,Ceramic, Chip	ECZH0025917	GRM0335C1E470J 47pF 5% 25V NP0 -55TO+125C 0603 R/TP - MURATA MANUFACTURING CO.,LTD.	
6	C1102	Inductor,Multilayer, Chip	EAP62227201	LG HK 0603 1N8S-T 1.8NH 0.3NH - 380mA - - 0.16OHM 10GHZ 4 SHIELD - 0.6X0.3X0.3MM R/TP TAIYO YUDEN CO.,LTD	
6	C1218	Inductor,Multilayer, Chip	EAP62227901	LG HK 0603 18NJ-T 18NH 5% - 180mA - - 0.71OHM 2.3GHZ 5 SHIELD - 0.6X0.3X0.3MM R/TP TAIYO YUDEN CO.,LTD	

Level	Location no	Description	P/N	Specification	Remark
6	C100 C103	Capacitor,Ceramic, Chip	ECZH0000813	C1005C0G1H101JT 100pF 5% 50V C0G - 55TO+125C 1005 R/TP - TDK KOREA COOPERATION	
6	FL95102	Coupler, RF Bi-Directional	ECA30260001	HHM2510B1 0.5x0.65 SMD COUPLER 2450, 5375 2400-2500, 4900-5850 SMD R/TP 2.4-2.5GHz(19),4.9-5.85GHz(12.5) 2.4-2.5GHz(0.3),4.9-5.85GHz(0.4) 2.4-2.5GHz(30min),4.9-5.85GHz(25min) - TDK CORPORATION	
6	EAX010000	PCB,Main	EAX65742901	LGVS985.AVRZTN 1.0 FR-4 Any Layer 10Layer 0.8mm Main	
6	FB1102 FB1103	Filter,Bead	EAM62252001	BLM03HG102SN1D 1000 ohm 0.6X0.3X0.33 25% 2.6 ohm 0.125A SMD R/TP 2P 0 MURATA MANUFACTURING CO.,LTD.	
6	ANT10002 ANT10003	C-Clip	EAG63652301	2108610-5 1P ANT TERMINAL STRAIGHT SMD T/REEL AU 2.9X1.0X1.4(L X W X H) SERVEONE CO., LTD.	
6	ANT1102 ANT1103 ANT1104 ANT1105 ANT1106 ANT1107	C-Clip	EAG63910001	1201-01A 1P ANT TERMINAL STRAIGHT SMD REEL AU 2.6X1.0X0.9(LXWXH) SERVEONE CO., LTD.	
6	C11004 C11005 C1101 C1129 C1130 C1132 C1142 C1192 C1193 C1773 C1774 C7505 C7506 C7507 C7915 C7916 C7917 C7918 C7919 C7920 C7921	Capacitor,Ceramic, Chip	ECCH0009103	C0603C0G1H101JT00NN 100pF 5% 50V C0G - 55TO+125C 0603 R/TP - - TDK CORPORATION	
6	C1126 C6207 C6208	Capacitor,Ceramic, Chip	ECCH0009104	C0603C0G1H330JT00NN 33pF 5% 50V C0G - 55TO+125C 0603 R/TP - - TDK CORPORATION	

Level	Location no	Description	P/N	Specification	Remark
6	C2305 C2306 C2307 C2308 C2309 C2310 C2311 C2312 C2350 C2352 C2354 C2377 C2378 C2379 C2399 C3200 C4127 C4143 C4201 C7101 C7200 C7900 C7910 C7913 C9501 C9503 C9504	Capacitor,Ceramic, Chip	ECCH0017301	CL03A105MQ3CSNH 0.000001F 20% 6.3V X5R - 45TO+85C 0603 R/TP - SAMSUNG ELECTRO-MECHANICS CO., LTD.	
6	C1157	Inductor,Multilayer, Chip	EAP62546201	LQP03TN1N8B02D 1.8NH 0.1NH - 600mA - - 0.15OHM 15GHZ 14 SHIELD - 0.6X0.3X0.3MM R/TP MURATA MANUFACTURING CO.,LTD.	
6	R2123 R2124 R2125 R2126	Resistor,Chip	EBC61856201	RC0201FR-07240RL 240OHM 1% 1/20W 0603 R/TP - YAGEO CORPORATION	
6	R18009 R3207 R6100 R6101 R6102 R6106 R6109 R6620 R6621 R7201	Resistor,Chip	ERHY0009501	MCR006YZPJ000 0OHM 5% 1/20W 0603 R/TP - ROHM.	
6	C2102 C2103 C4109 C6929	Capacitor,Ceramic, Chip	EAE62286801	CL03A104KP3NNNC 0.0000001F 10% 10V X5R - 55TO+85C 0603 R/TP 0.3 - SAMSUNG ELECTRO-MECHANICS CO., LTD.	

Level	Location no	Description	P/N	Specification	Remark
6	C11006 C1127 C3202 C3204 C4200 C6101 C6102 C6104 C6105 C6107 C6108 C6210 C7206 C7902 C8501	Capacitor,Ceramic, Chip	ECCH0009101	C0603X5R0J104KT00NN 0.1uF 10% 6.3V X5R - 55TO+85C 0603 R/TP - TDK CORPORATION	
6	C4901	Capacitor,Ceramic, Chip	ECCH0007804	CL05A225MP5NSNC 2.2uF 20% 10V X5R - 55TO+85C 1005 R/TP 0.5MM - SAMSUNG ELECTRO-MECHANICS CO., LTD.	
6	U4400	IC,DC,DC Converter	EAN62930601	LM3697YFQR 2.7V to 5.5V up to 40V 0W DSBGA R/TP 12P 2048 Dimming, 1.30x1.65x0.6 mm, 3 series LED strings, NO USE of Negative Power TEXAS INSTRUMENTS KOREA LTD, HONGKONG BRANCH.	
6	U4100	IC,PMIC	EAN62667101	PM8941 to 5.5V adj 0W CSP R/TP 229P - QUALCOMM INCORPORATED.	
6	C1204 C1327 C1702 L1216	Inductor,Multilayer, Chip	EAP62108001	LQP03TG2N2C02D 2.2NH 0.2NH - 450mA - - 0.25OHM 6GHZ 13 SHIELD - 0.6X0.3X0.3MM R/TP MURATA MANUFACTURING CO.,LTD.	
6	C7611 C7612 C95155 C95159	Capacitor,Ceramic, Chip	ECCH0009504	MCH032A180JK 18pF 5% 25V NP0 -55TO+125C 0603 R/TP - ROHM.	
6	U4700	IC,Charger	EAN63049301	BQ24296RGER up to 4.35V adj 0W CSP R/TP 24P - TEXAS INSTRUMENTS KOREA LTD, HONGKONG BRANCH.	
6	C1733 C1734	Capacitor,Ceramic, Chip	ECCH0009231	GRM033R71C471K 470pF 10% 16V X7R - 55TO+125C 0603 R/TP - - MURATA MANUFACTURING CO.,LTD.	
6	R1106 R3208 R4103 R4759 R6421	Resistor,Chip	ERHY0009505	MCR006YZPJ103 10KOHM 5% 1/20W 0603 R/TP - ROHM.	
6	FL1116	Filter,Saw	EAM62771001	B9876 2140.0MHz 1.1x0.9x0.45t SMD R/TP 5P EPCOS PTE LTD.	

Level	Location no	Description	P/N	Specification	Remark
6	U8400	IC,Proximity	EAN62568201	APDS-9930-200 High T Proximity and Ambient Light Sensor 3.36X4.94X3.45 COB R/TP 8P High T Proximity and Ambient Light Sensor AVAGO TECHNOLOGIES INTERNATIONAL SALES PTE. LIMITED	
6	R4800	Resistor,Chip	ERHY0017901	RC0201JR-07330KL 330KOHM 5% 1/20W 0603 R/TP - YAGEO CORPORATION	
6	C7500 C7503 C7504	Capacitor,Ceramic, Chip	EAE63067401	GRM188R61C475KAAJ 4.7uF -10TO+10% 16V X5R -55TO+85C 1608 R/TP Max 0.95T L:1.6+-0.15 W:0.8+-0.15 T:0.8+-0.15 MURATA MANUFACTURING CO.,LTD.	
6	C1228 L1211	Inductor,Multilayer, Chip	EAP61767801	LQP03TN2N4B02D 2.4NH 0.1NH - 500mA - - 0.2OHM 6GHZ 14 SHIELD NONE 0.6X0.3X0.3MM R/TP MURATA MANUFACTURING CO.,LTD.	
6	L1137	Inductor,Multilayer, Chip	EAP62227801	LG HK 0603 12NJ-T 12NH 5% - 190mA - - 0.68OHM 2.7GHZ 5 SHIELD - 0.6X0.3X0.3MM R/TP TAIYO YUDEN CO.,LTD	
6	FL95100	Filter,Separator	EAM63190301	DPX105950DT-6112A3 0.50dB / 0.80dB - 30dB max. LPF@2.4G / BPF@5.0G TDK CORPORATION	
6	C1320 C1324 L1615	Inductor,Multilayer, Chip	EAP62225901	LQP03TG1N0C02D 1NH 0.2NH - 600mA - - 0.15OHM 6GHZ 12 SHIELD - 0.6X0.3X0.3MM R/TP MURATA MANUFACTURING CO.,LTD.	
6	C5200 C5217 C95122 C95123	Capacitor,Ceramic, Chip	ECZH0001217	GRM155R60J474K 470nF 10% 6.3V X5R - 25TO+70C 1005 BK-DUP - MURATA MANUFACTURING CO.,LTD.	
6	FL1702	Filter,Duplexer	EAM62532401	SAYRF1G73BA0F0A 2132.5 MHz 2110 to 2155 MHz 1732.5 1710 to 1755 MHz 1.9dB typ. / 2.5dB max. 1.5dB typ. / 2.0dB max. 2.0x1.6x0.6 DUAL SMD R/TP 9P MURATA MANUFACTURING CO.,LTD.	
6	L1711	Inductor,Multilayer, Chip	EAP62886101	LQP03TN4N7H02D 4.7NH 3% - 350mA - - 0.4OHM 4.4GHZ 14 SHIELD - 0.6X0.3X0.3MM R/TP MURATA MANUFACTURING CO.,LTD.	
6	FL1600	Filter,Duplexer	EAM62870001	B8616 881.5MHz 869.0to894.0MHz 836.5MHz 824.0to849.0MHz 2.1/2.8dB 1.5/2.7dB 2.5x2.0x0.53t DUAL SMD R/TP 9P EPCOS PTE LTD.	
6	C4705	Capacitor,Ceramic, Chip	ECCH0002002	C1005X7R1A473KT000F 47nF 10% 10V X7R - 55TO+125C 1005 R/TP 0.5+-0.05 - TDK CORPORATION	
6	C95105 L1209 L1316 L1703 L1757	Capacitor (High Frequency), Ceramic,Chip	EAE62945801	GRM0335C1E1R0C_H 1pF 0.25PF 25V C0G - 55TO+125C 0603 R/TP 0.3+-0.03 L:0.6+-0.03 W:0.3+-0.03 T:0.3+-0.03 MURATA MANUFACTURING CO.,LTD.	

Level	Location no	Description	P/N	Specification	Remark
6	C11003 C1559 C1775 C1776 C6103 C6615 C6920 C6921 C6922 C6923 C6924 C6925 C7508 C9100 C9502	Capacitor,Ceramic, Chip	ECZH0025916	GRM0335C1E330J 33pF 5% 25V NP0 -55TO+125C 0603 R/TP - - MURATA MANUFACTURING CO.,LTD.	
6	FL1204	Filter,Duplexer	EAM62632601	ACMD-6103-TR1 1842.5MHz 1805to1880MHz 1747.5MHz 1710to1785MHz 1.6typ/4.0max 1.5typ/3.5max 2.0x1.6x0.9t DUAL SMD R/TP 9P AVAGO TECHNOLOGIES INTERNATIONAL SALES PTE. LIMITED	
6	C4116	Capacitor,Ceramic, Chip	EAE62927201	ADK107BBJ476MA 47uF -20TO20% 4V X5R -55TO+85C 1608 R/TP 0.8T +0.2 L:1.6+0.2 W:0.8+0.2 T:0.8+0.2 KOREA TAIYO YUDEN.CO., LTD.	
6	C1305 C1310 C1561 C1563 C5225	Capacitor,Ceramic, Chip	ECZH0025920	GRM033R71C102K 1nF 10% 16V X7R -55TO+125C 0603 R/TP - - MURATA MANUFACTURING CO.,LTD.	
6	C3201 C3203 C7901	Capacitor,Ceramic, Chip	ECCH0000198	CL05A225MQ5NSNC 2.2uF 20% 6.3V X5R -55TO+85C 1005 R/TP . SAMSUNG ELECTRO-MECHANICS CO., LTD.	
6	C10001 C4129 C6209 C7405 C7906 C7908 C7911	Capacitor,Ceramic, Chip	ECCH0017601	CL05A475MQ5NRNC 4.7uF 20% 6.3V X5R -55TO+85C 1005 R/TP 0.5MM - SAMSUNG ELECTRO-MECHANICS CO., LTD.	
6	L1140 L1708 L1754 L95111	Inductor,Multilayer, Chip	EAP62226001	LQP03TG1N2C02D 1.2NH 0.2NH - 600mA - - 0.15OHM 6GHZ 13 SHIELD - 0.6X0.3X0.3MM R/TP MURATA MANUFACTURING CO.,LTD.	
6	U8800	IC,Motor Driver	EUSY0200803	SM100 2.4 3.6 0.05 1W MICRO LEAD FRAME R/TP 8P 1 - Crucialchips Co., Ltd.	

Level	Location no	Description	P/N	Specification	Remark
6	C95107	Capacitor,Ceramic, Chip	ECCH0009208	GRM0335C1ER50C 0.5pF 0.25PF 25V X7R - 55TO+125C 0603 R/TP - MURATA MANUFACTURING CO.,LTD.	
6	U5200	IC,NFC	EAN62632401	PN5472A2UK/C20803 WLCSP 2.81x2.79x0.56 NFC IC WLCSP R/TP 42P NXP Semiconductors	
6	U1750	IC,Power Amplifier	EAN62867801	ACPM-9307-TR1 3.2V to 4.5V 0 0 0W 0W 0 1 SMD R/TP 10P Band7, 2520size, MIPI, APT AVAGO TECHNOLOGIES INTERNATIONAL SALES PTE. LIMITED	
6	C4103 C4708 C4709	Capacitor,Ceramic, Chip	ECCH0000182	GRM155R61A104K 0.1uF 10% 10V X5R - 55TO+85C 1005 R/TP - - MURATA MANUFACTURING CO.,LTD.	
6	C95124 L1141 L1300 L1319	Capacitor (High Frequency), Ceramic,Chip	EAE62946001	GRM0335C1E1R8C_H 1.8pF 0.25PF 25V C0G - 55TO+125C 0603 R/TP 0.3+-0.03 L:0.6+-0.03 W:0.3+-0.03 T:0.3+-0.03 MURATA MANUFACTURING CO.,LTD.	
6	D4400	Diode,Schottky	EAH61992801	PMEG4002EL 600mV 40V 200mA 0SEC 20pF 0W SOD-882 R/TP 2P 1 NXP Semiconductors	
6	L1160 L1606	Inductor,Multilayer, Chip	EAP62227301	LG HK 0603 2N2S-T 2.2NH 0.3NH - 360mA - - 0.19OHM 8.8GHZ 4 SHIELD - 0.6X0.3X0.3MM R/TP TAIYO YUDEN CO.,LTD	
6	R6422 R9501	Resistor,Chip	ERHY0009507	MCR006YZPJ105 1MOHM 5% 1/20W 0603 R/TP - ROHM.	
6	R18002	Resistor,Chip	ERHZ0000438	MCR01MZP5J203 20KOHM 5% 1/16W 1005 R/TP - ROHM.	
6	L1753	Capacitor (High Frequency), Ceramic,Chip	EAE62963701	GRM0335C1H100J_H 10pF -5 to +5% 50V C0G - 55TO+125C 0603 R/TP 0.3+-0.03 L:0.6+-0.03 W:0.3+-0.03 T:0.3+-0.03 MURATA MANUFACTURING CO.,LTD.	
6	R9107	Resistor,Chip	ERHY0009526	MCR006YZPJ472 4.7KOHM 5% 1/20W 0603 R/TP - ROHM.	
6	L1610	Inductor,Multilayer, Chip	EAP62226101	LQP03TG3N9C02D 3.9NH 0.2NH - 350mA - - 0.35OHM 6GHZ 13 SHIELD - 0.6X0.3X0.3MM R/TP MURATA MANUFACTURING CO.,LTD.	
6	U1500	IC,RF Transceiver,4G	EAN62697301	WTR1625L WTR1625L 2G/3G/4G GSM/GPRS/EDGE,1X, 1xEV-DO ,WCDMA , TD-SCDMA , HSPA+/DC-HSPA+ , LTE (FDD) ,TD-LTE, 164pin CSP R/TP 164P QUALCOMM INCORPORATED.	
6	C6616 C6618 C6621	Capacitor,Ceramic, Chip	ECCH0009106	C0603X7R1C103KT 10nF 10% 10V X7R - 55TO+125C 0603 R/TP - TDK CORPORATION	

Level	Location no	Description	P/N	Specification	Remark
6	L7500	Inductor,Wire Wound,Chip	EAP62588001	MAKK2016T4R7M 4.7UH 20% - 1A 1 1.05 0.38OHM - - SHIELD 2.0X1.25X1.0 MM - R/TP TAIYO YUDEN CO.,LTD	
6	C1403 C1406 C1612 C1615 C4119 C95160	Capacitor,Ceramic, Chip	EAE62282201	GRM033R71E102KA01D 0.000000001F 10% 25V X7R -55TO+125C 0603 R/TP 0.3+/-0.03 MM - MURATA MANUFACTURING CO.,LTD.	
6	FB6610 L6601 L6602 R6114 R6115 R6622	Inductor,Multilayer, Chip	ELCH0001444	0402AF-101XJEW 100NH 5% - 900mA - - 0.16OHM 1.4GHZ 8 NON SHIELD NONE 1.12X0.66X0.66MM R/TP COILCRAFT SINGAPORE PTE LTD.	
6	R1507 R1508	Resistor,Chip	EBC62236701	RC0402FR-074K75L 4.75KOHM 1% 1/16W 1005 R/TP 0.4T max. YAGEO CORPORATION	
6	C18000 C18016 C4755 C4756	Capacitor,Ceramic, Chip	EAE62685301	CL05A105KA5NQNC 1uF 10% 25V X5R - 55TO+85C 1005 R/TP 0.6T max. Samsung(1.0+-0.1 0.5+-0.1 0.5+-0.1) Murata (1.0+-0.05 0.5+-0.05 0.5+-0.05) SAMSUNG ELECTRO-MECHANICS CO., LTD.	
6	R1505 R1506	Resistor,Chip	ERHY0009503	MCR006YZPJ101 100OHM 5% 1/20W 0603 R/TP - ROHM.	
6	R1504	Resistor,Chip	EBC62497901	RC0201FR-0762RL 62OHM 1% 1/20W 0603 R/TP - YAGEO CORPORATION	
6	LD4602	LED,Chip	EAV62251901	CL-503S-TCC-SD-T RED/GREEN/BLUE R(1.85~2.4) G(2.7~3.1) B(2.75~3.1) at 5mA R(30) G(20) B(20) mA R(19~33) G(90~220) B(20~65) mcd at 5mA R(618) G(530) B(470) nm at 5mA R(78) G(80) B(75) mW 1513 R/TP 4P - CITIZEN ELECTRONICS CO.,LTD.	
6	C6202 C7100 C7102 C9101	Capacitor,Ceramic, Chip	EAE62502901	CL05A106MP5NUNC 10uF 20% 10V X5R - 55TO+85C 1005 R/TP 0.55T max. SAMSUNG ELECTRO-MECHANICS CO., LTD.	
6	U1100	Filter,Separator, Switch	EAM62251001	RF1602 0.5 30 38 SPDT, High IIP3 typ. 74dBm, 1bit control 1.8V RF MICRO DEVICES INC	
6	R4755 R4903 R7101	Resistor,Chip	ERHY0009506	MCR006YZPJ104 100KOHM 5% 1/20W 0603 R/TP - ROHM.	

Level	Location no	Description	P/N	Specification	Remark
6	C10000 C4202 C4204 C4208 C4209 C4210 C4211 C4212 C4213 C6109	Capacitor,Ceramic, Chip	EAE62962301	GRM155R61A225KE95 2.2uF -10TO+10% 10V X5R -55TO+85C 1005 R/TP 0.5 L:1.0+-0.05 W:0.5+-0.05 T:0.5+-0.05 MURATA MANUFACTURING CO.,LTD.	
6	U1300	IC,Power Amplifier	EAN62792001	SKY77629-21 3.0 to 4.5V 0 0 0W 0W 0 0 SMD R/TP 42P 7*5size, MMPA for MSM8974, MIPI, APT SKYWORKS SOLUTIONS INC.	
6	C4113	Capacitor,Ceramic, Chip	ECZH0001210	C1005Y5V1A474ZT000F 470nF -20TO+80% 10V Y5V -30TO+85C 1005 R/TP - TDK KOREA COOPERATION	
6	R11003 R11004	Resistor,Chip	ERHY0009527	MCR006YZPJ473 47KOHM 5% 1/20W 0603 R/TP - ROHM.	
6	C4902 C7907 C7909 C7912	Capacitor,Ceramic, Chip	EAE62506501	CL05A475MP5NRNC 4.7uF 20% 10V X5R - 55TO+85C 1005 R/TP - - SAMSUNG ELECTRO-MECHANICS CO., LTD.	
6	FL1120	Filter,Saw	EAM62352101	857031 826 2.5*2.0*0.56 SMD R/TP 13P TRIQUINT SEMICONDUCTOR INC.	
6	U1703	IC,Power Amplifier	EAN62457201	AFEM-7613 3.2V to 4.2V 0 0 0W 0W 0 1 SMD R/TP 17P Band13 PAD, 5.5*3*0.93, 2gain mode AVAGO TECHNOLOGIES INTERNATIONAL SALES PTE. LIMITED	
6	L4202	Inductor,Wire Wound,Chip	EAP62526601	TFM201610GHM-2R2MTAA 2.2UH 20% - 1.9A 2.4 1.9 0.152OHM - - SHIELD 2.0X1.6X1.0MM - R/TP TDK KOREA COOPERATION	
6	D95100	Diode,Schottky	EAH62512501	BAT15-02EL 410mV 4V 110mA 0SEC 0.35pF 0W TSLP-2-19 R/TP 2P 1 INFINEON TECHNOLOGIES (ASIA PACIFIC) PTE LTD.	
6	R7608	Resistor,Chip	ERHZ0000350	MCR01MZP5F6203 620KOHM 1% 1/16W 1005 R/TP - ROHM Semiconductor KOREA CORPORATION	
6	C1221 L1721	Inductor,Multilayer, Chip	EAP62227001	LG HK 0603 1N2S-T 1.2NH 0.3NH - 450mA - - 0.12OHM 10GHZ 4 SHIELD - 0.6X0.3X0.3MM R/TP TAIYO YUDEN CO.,LTD	
6	R2103 R2104	Resistor,Chip	ERHZ0000235	MCR01MZP5F2000 200OHM 1% 1/16W 1005 R/TP - ROHM.	

Level	Location no	Description	P/N	Specification	Remark
6	U4800	IC,Fuel Gauge	EAN62421601	MAX17048X+T10 2.5 to 4.5V adj 0W CSP R/TP 8P - MAXIM INTEGRATED PRODUCTS INC.	
6	R8900	Resistor,Chip	EBC62235801	RC0603F363CS 36KOHM 1% 1/20W 0603 R/TP - SAMSUNG ELECTRO-MECHANICS CO., LTD.	
6	U7600	IC,LDO Voltage Regulator	EAN62768701	RP114K331D-TRB 1.4 to 5.25 3.3 0W DFN R/TP 4P - RICOH COMPANY, LTD.	
6	FL1102 FL1751	Coupler,RF Directional	ECA30240001	LDJ18829M24AD011 1.6x0.8x0.7t SMD COUPLER 1694MHz 1992MHz (698~2690MHz) SMD R/TP 22.4 to 25.7 0.16 26 - MURATA MANUFACTURING CO.,LTD.	
6	C4903 C6112 C6113 C6203 C6204 C6420 C6421 C7404	Capacitor,Ceramic, Chip	EAE62762301	CL03A105MP3NSNC 1uF 20% 10V X5R - 55TO+85C 0603 R/TP 0.33 MM - SAMSUNG ELECTRO-MECHANICS CO., LTD.	
6	C1753	Capacitor,Ceramic, Chip	ECCH0009520	MCH032A150JK 15pF 5% 25V X7R -55TO+125C 0603 R/TP - ROHM.	
6	FL1750	Filter,Duplexer	EAM63230001	ACMD-6307 2655MHz 2620 to 2690MHz 2535MHz 2500 tp 2570MHz 3.0dB 3.5dB 1.6x2.0x0.925 DUAL SMD P/TR 9P AVAGO TECHNOLOGIES INTERNATIONAL SALES PTE. LIMITED	
6	FL1701	Filter,Saw	SFSY0040901	SAFEA782MAL0F00 782MHz 1.4*1.1*0.5 SMD R/TP 5P MURATA MANUFACTURING CO.,LTD.	
6	R4105	Resistor,Chip	ERHY0009537	MCR006YZPF1503 150KOHM 1% 1/20W 0603 R/TP - ROHM.	
6	R2121	Resistor,Chip	EBC62581901	RC0201FR-0733RL 33OHM 1% 1/20W 0603 R/TP - YAGEO CORPORATION	
6	L1400 L1401	Inductor,Wire Wound,Chip	EAP62307401	VLS252010ET-1R5N 1.5UH 30% - 1.45A 1.45 1.5 0.128OHM - - SHIELD 2.5X2.0X1.0 MM - R/TP TDK KOREA COOPERATION	
6	C1175 C1322 L1149	Inductor,Multilayer, Chip	EAP62246001	LG HK 0603 3N3S-T 3.3NH 0.3NH - 320mA - - 0.23OHM 6.7GHZ 5 SHIELD - 0.6X0.3X0.3MM R/TP TAIYO YUDEN CO.,LTD	
6	C1116	Inductor,Multilayer, Chip	EAP62227701	LG HK 0603 8N2J-T 8.2NH 5% - 230mA - - 0.45OHM 3.4GHZ 5 SHIELD - 0.6X0.3X0.3MM R/TP TAIYO YUDEN CO.,LTD	

Level	Location no	Description	P/N	Specification	Remark
6	U1501	IC,RF Transceiver,4G	EAN62697201	WTR1625 WTR1625 2G/3G GSM/GPRS/EDGE,1X, 1xEV-DO,WCDMA,TD-SCDMA, HSPA+/DC-HSPA+ CSP R/TP 164P QUALCOMM INCORPORATED.	
6	FL95101	Filter,Ceramic	EAM62690501	ACPF-7124 BPF 2.44GHZ 1.4x1.1x0.8t SMD R/TP 5P AVAGO TECHNOLOGIES INTERNATIONAL SALES PTE. LIMITED	
6	R2106 R2107 R2110 R2111 R2112 R2113 R2114 R2115 R6116	Resistor,Chip	ERHY0009516	MCR006YZPJ222 2.2KOHM 5% 1/20W 0603 R/TP - ROHM.	
6	L4101	Inductor,Wire Wound,Chip	EAP62187401	MAKK2016T1R0M 1UH 20% - 2.2A 2.2 2.45 0.075OHM - - SHIELD 2.0X1.6X1.0MM - R/TP TAIYO YUDEN CO.,LTD	
6	C1206 C1610 L1307 L1310 L1758	Capacitor (High Frequency), Ceramic,Chip	EAE62962201	GRM0335C1ER75W_H 0.75pF 0.05PF 25V C0G - 55TO+125C 0603 R/TP 0.3 L:0.6+-0.03 W:0.3+-0.03 T:0.3+-0.03 MURATA MANUFACTURING CO.,LTD.	
6	U1101	Filter,Separator, Switch	EAM62634001	RF1635 0 0 32dBm TDD-LTE Tx/Rx RF MICRO DEVICES INC	
6	R4708	Resistor,Chip	ERHY0009303	MCR006YZPF1002 10KOHM 1% 1/20W 0603 R/TP - ROHM.	
6	R7600	Resistor,Chip	ERHZ0000205	MCR01MZP5F1004 1MOHM 1% 1/16W 1005 R/TP - ROHM.	
6	BAT4100	Capacitor Assembly	SMZY0023501	PAS311HR-VG1 Coin 0.03F 3.8 x 3.8 1.5 KOREA TAIYO YUDEN.CO., LTD.	
6	FL1113	Filter,Saw	EAM62890501	B9899 751.0MHz 1.1x0.9x0.4t SMD R/TP 5P EPCOS PTE LTD.	
6	FL9201 FL9202	Filter,LCR	EAM62451101	ICMEF112P350MFR COMMON MODE NOISE FILTER 0HZ 0F 0H SMD R/TP Common mode Impedance at 100MHz : 35ohm+-30%, DC Resistance Max :3.0ohm INNOCHIPS TECHNOLOGY	
6	C1757	Inductor,Multilayer, Chip	EAP62108201	LQP03TG3N3C02D 3.3NH 0.2NH - 400mA - - 0.32OHM 6GHZ 13 SHIELD - 0.6X0.3X0.3MM R/TP MURATA MANUFACTURING CO.,LTD.	

Level	Location no	Description	P/N	Specification	Remark
6	FL1117	Filter,Saw	EAM62872101	SAFFB1G84AB0F0A 1842.50MHz 1.1x0.9x0.5t SMD R/TP 5P MURATA MANUFACTURING CO.,LTD.	
6	FL1202	Module,Rx Module	EAT61876301	LMSW54GM-G27 0DBM 0DB 0% 0A 0A 0DB 0DBM 0DBM 40P 5.0x4.0x1.0MM FEMiD for WTR1625 Non CA, SP12T, B1,2,5,8 MURATA MANUFACTURING CO.,LTD.	
6	R4114 R7607	Resistor,Chip	ERHY0009536	MCR006YZPF1003 100KOHM 1% 1/20W 0603 R/TP - ROHM.	
6	C4203	Capacitor,Ceramic, Chip	EAE62542701	CL21A226MPCLRNC 22uF 20% 10V X5R - 55TO+85C 2012 R/TP 0.95T max. - SAMSUNG ELECTRO-MECHANICS CO., LTD.	
6	L1403 L1404 L1718	Inductor,Multilayer, Chip	EAP62246401	LG HK 0603 22NJ-T 22NH 5% - 150mA - - 1OHM 1.8GHZ 5 SHIELD - 0.6X0.3X0.3MM R/TP TAIYO YUDEN CO.,LTD	
6	C7905	Capacitor,Ceramic, Chip	ECCH0007805	CL05A106MQ5NUNC 10uF 20% 6.3V X5R - 55TO+85C 1005 R/TP 0.5+-0.05 - SAMSUNG ELECTRO-MECHANICS CO., LTD.	
6	R1107	Resistor,Chip	ERHZ0000316	MCR01MZP5F7503 750KOHM 1% 1/16W 1005 R/TP - ROHM.	
6	FL1118	Filter,Saw	EAM62930701	SAFFB2G65AA0F0A 2655.0MHz 1.1x0.9x0.5t SMD R/TP 5P MURATA MANUFACTURING CO.,LTD.	
6	C1319 L1601 L1763	Inductor,Multilayer, Chip	EAP62227601	LG HK 0603 6N8J-T 6.8NH 5% - 250mA - - 0.39OHM 3.9GHZ 5 SHIELD - 0.6X0.3X0.3MM R/TP TAIYO YUDEN CO.,LTD	
6	C2391 C2392 C4205 C4206 C4207	Capacitor,Ceramic, Chip	EAE62767801	JDK212BBJ476MD 47uF -20TO20% 6.3V X5R - 55TO+85C 2012 R/TP 0.85T - TAIYO YUDEN CO.,LTD	
6	U8900	IC, Microprocessors	EAN62661801	MAXQ616V ~3.6V 3.1mA 12MHZ WLP R/TP 16P - MAXIM INTEGRATED PRODUCTS INC.	
6	R95111	Resistor,Chip	ERHY0009504	MCR006YZPJ102 1KOHM 5% 1/20W 0603 R/TP - ROHM.	
6	L1614	Capacitor (High Frequency), Ceramic,Chip	EAE63007901	GRM0335C1E9R0D_H 9pF 0.5PF 25V C0G - 55TO+125C 0603 R/TP Max 0.33T L:0.6+-0.03 W:0.3+-0.03 T:0.3+-0.03 MURATA MANUFACTURING CO.,LTD.	
6	U8700	IC,Hall Effect Switch	EAN62682901	BU52061NVX Hall IC 1.2X1.6 SSON R/TP 4P - ROHM Semiconductor KOREA CORPORATION	

Level	Location no	Description	P/N	Specification	Remark
6	R11002	Resistor,Chip	ERHY0009311	MCR006YZPF51R0 51OHM 1% 1/20W 0603 R/TP - ROHM.	
6	R5201	Resistor,Chip	EBC62035901	RC0201FR-071RL 1OHM 1% 1/20W 0603 R/TP - YAGEO CORPORATION	
6	X4100	Crystal	EAW61883401	X1E0002910001 19.2MHZ 10PPM 7F - SMD R/TP EPSON TOYOCOM CORP	
6	C95121	Capacitor,Ceramic, Chip	ECCH0032901	GRM0335C1H2R7C 2.7pF 0.25PF 50V C0G - 55TO+125C 0603 R/TP 0.3MM MURATA MANUFACTURING CO.,LTD.	
6	C4900	Capacitor,Ceramic, Chip	EAE62522101	CL10A226MP8NUNE 22uF 20% 10V X5R - 55TO+85C 1608 R/TP 1.05T max. - SAMSUNG ELECTRO-MECHANICS CO., LTD.	
6	C18001 C18011	Capacitor,Ceramic, Chip	EAE62685201	C1005X5R1E104K 0.1uF 10% 25V X5R -55TO+85C 1005 R/TP 0.55T max. TDK KOREA COOPERATION	
6	C1301	Inductor,Multilayer, Chip	EAP62245901	LG HK 0603 2N7S-T 2.7NH 0.3NH - 340mA - - 0.21OHM 7.7GHZ 5 SHIELD - 0.6X0.3X0.3MM R/TP TAIYO YUDEN CO.,LTD	
6	U7500	IC,DC,DC Converter	EAN62731801	TPS65132 2.5V to 5.5V +4.0V to +6.0V, -4.0V to -6.0V 0W WCSP R/TP 15P Dual Output LCD Bias, Output Current: 80mA Max., 15-Ball CSP Package TEXAS INSTRUMENTS KOREA LTD, HONGKONG BRANCH.	
6	C8101	Capacitor,Ceramic, Chip	ECCH0000155	MCH153CN103KK 10nF 10% 16V X7R -55TO+125C 1005 R/TP - ROHM Semiconductor KOREA CORPORATION	
6	C7903 C7904 C7914	Capacitor,Ceramic, Chip	EAE62726601	CL03A225MQ3CRNC 2.2uF -20TO20% 6.3V X5R - 55TO+85C 0603 R/TP 0.3T - SAMSUNG ELECTRO-MECHANICS CO., LTD.	
6	R7603	Resistor,Chip	ERHY0009555	MCR006YZPF1202 12KOHM 1% 1/20W 0603 R/TP - ROHM.	
6	C2331 C2332 C2333 C2334	Capacitor,Ceramic, Chip	ECCH0017501	CL10A226MQ8NRNE 22uF 20% 6.3V X5R - 55TO+85C 1608 R/TP 0.8MM - SAMSUNG ELECTRO-MECHANICS CO., LTD.	
6	R4107	Resistor,Chip	EBC62616701	RC0402FR-0730K9L 30.9KOHM 1% 1/16W 1005 R/TP - YAGEO CORPORATION	
6	FL1752	Filter,Saw	EAM62732801	B8808 881.5MHz 1.1x0.9x0.45t SMD R/TP 5P EPCOS PTE LTD.	

Level	Location no	Description	P/N	Specification	Remark
6	U95100	IC,WiFi	EAN63186901	WCN-3680B-0-79WLNSP-TR-00-0 WiFi(11a/b/g/n/ac), BT4.0, FM Rx - Optional support for 2.4GHz and 5GHz external PAs/LNAs WLCSP R/TP 79P QUALCOMM INCORPORATED.	
6	FL1119	Filter,Dielectric	SFDY0003102	LFL18628MTC2C221 LPF 628.5MHZ 317MHz SMD R/TP 6P MURATA MANUFACTURING CO.,LTD.	
6	R1108	Resistor,Chip	ERHY0000298	RC0402JR-073M3L 3.3MOHM 5% 1/16W 1005 R/TP - YAGEO CORPORATION	
6	LD8900	LED,Chip	EAV62193601	IR26-61C/L261/TR8(LM) CLEAR 1.2~1.5V(If=20mA) 65mA 2.0~5.0 940nm(Typ.) 100mW 3012 R/TP 2P - EVERLIGHT ELECTRONICS CO., LTD.	
6	U95101	Module, FEM (Front End Module)	EAT62493501	SKY85709-11 30DBM 28DB 15% 200mA 250mA - 30DB 17DBM -3.5DBM 16P 2.5x2.5x0.45MM 11ac FEM 1.8%@16dBm, MCS9, VHT80 SKYWORKS SOLUTIONS INC.	
6	U1400 U1401	IC,DC,DC Converter	EAN62788501	LM3263 2.7V to 5.5V 0.4V to 3.6V 0W MICRO SMD R/TP 16P MIPI RFFE, 2G/3G/4G, 2.5A Max.(PWM), 2.7 MHz (typ.), 16-bump micro SMD TEXAS INSTRUMENTS KOREA LTD, HONGKONG BRANCH.	
6	C4104 C4106	Capacitor,Ceramic, Chip	ECCH0005603	GRM188R61A225K 2.2uF 10% 10V X5R - 55TO+85C 1608 R/TP - MURATA MANUFACTURING CO.,LTD.	
6	X7600	Crystal	EAW61543401	1ZCB27000AA0A 27MHZ 10PPM 12F ; SMD R/TP DAISHINKU CORPORATION.	
6	D7600	Diode,Switching	EDSY0019602	PMEG3005AEA 430mV 30V 500mA 3.5A 0SEC 0W SOD323 R/TP 2P 1 NXP Semiconductors	
6	R4709	Resistor,Chip	EBC62596701	RC0201FR-0715KL_ 15KOHM 1% 1/20W 0603 R/TP - YAGEO CORPORATION	
6	U1600	IC,Power Amplifier	EAN62827601	ACPM-920502-TR1 3.2V to 4.35V 0 0 0W 0W 0 2 SMD R/TP 16P 3*4 CDMA(BC0/BC10 & BC1) Dual, with CPL, GPIO AVAGO TECHNOLOGIES INTERNATIONAL SALES PTE. LIMITED	
6	U7602	IC,LDO Voltage Regulator	EAN62735301	RP114K101D-TRB 1.4v to 5.25v 1.0 0W DFN R/TP 4P - RICOH COMPANY, LTD.	
6	C1106	Inductor,Multilayer, Chip	EAP62109001	LQP03TN0N6B02D 600PH 0.1NH - 850mA - - 0.07OHM 6GHZ 14 SHIELD - 0.6X0.3X0.3MM R/TP MURATA MANUFACTURING CO.,LTD.	
6	X95100	Crystal	EAW62224101	Q22FA12800199 48MHZ 20PPM 0.000000000007F,0.0000000000087F 2016 SMD R/TP EPSON TOYOCOM CORP	

Level	Location no	Description	P/N	Specification	Remark
6	FL1601	Filter,Duplexer	EAM62811801	ACMD-6102-TR1 1960MHz 1930.48to1989.52MHz 1880MHz 1850.48to1909.52MHz 3.5dB 3.0dB 2.0x1.6x0.9t DUAL SMD R/TP 9P AVAGO TECHNOLOGIES INTERNATIONAL SALES PTE. LIMITED	
6	R6615	Wire Pad,Short	SAFP0000401	AX3100 ATL SV_SHIPBACK,MAIN,A	
6	C95101	Capacitor,Ceramic, Chip	ECCH0009506	MCH032A270JK 27pF 5% 25V NP0 -55TO+125C 0603 R/TP - ROHM.	
6	R4106	Resistor,Chip	ERHZ0000204	MCR01MZP5F1003 100KOHM 1% 1/16W 1005 R/TP - ROHM.	
6	FB95100	Filter,Bead	EAM62471001	BLM03AX241SN1D 240 ohm 0.6X0.3X0.33 25% 0.38 ohm 0.35A SMD R/TP 2P 0 MURATA MANUFACTURING CO.,LTD.	
6	R7602 R7609	Resistor,Chip	EBC62296301	RC0201FR-07665KL 665KOHM 1% 1/20W 0603 R/TP 0.26T max. YAGEO CORPORATION	
6	FL1105	Filter, Separator,Spdt	EAM62430001	LFD21892MDPFC065 0.55 13 3 - MURATA MANUFACTURING CO.,LTD.	
6	C9511 C9512 C9521	Capacitor,Ceramic, Chip	ECCH0009514	MCH032A(AN)100DK 10pF 0.5PF 25V X7R - 55TO+125C 0603 R/TP - ROHM.	
6	R2127	Resistor,Chip	EBC61959901	WR04X4641FTL 4.64KOHM 1% 1/16W 1005 R/TP WALSIN (Resistor Maker) - STC (WALSIN Resistor Supplier) STC CORP.	
6	SW1103 SW1107	Connector,RF	EAG63412001	W.FL2-R-SMT-1(61) 0.35MM STRAIGHT SOCKET SMD R/TP AU 50OHM 400mDB HIROSE KOREA CO.,LTD	
6	L4400	Inductor,Wire Wound,Chip	EAP62367801	VLS252010HBT-100M-LR 10UH 20% - 750mA 0.78 0.75 0.516OHM - - SHIELD 2.5X2.0X1.0 MM - R/TP TDK KOREA COOPERATION	
6	C5209 C5212	Capacitor,Ceramic, Chip	EAE63322001	GRM1555C1H271G 270pF 2% 50V C0G - 55TO+125C 1005 R/TP Max 0.55T L:1.0+-0.05 W:0.5+-0.05 T:0.5+-0.05 MURATA MANUFACTURING CO.,LTD.	
6	FL1122	Filter,Saw	EAM62732701	B8806 1960.0MHz 1.1x0.9x0.45t SMD R/TP 5P EPCOS PTE LTD.	
6	C1604	Capacitor (High Frequency), Ceramic,Chip	EAE62945901	GRM0335C1E1R2B_H 1.2pF 0.1PF 25V C0G - 55TO+125C 0603 R/TP 0.3+-0.03 L:0.6+-0.03 W:0.3+-0.03 T:0.3+-0.03 MURATA MANUFACTURING CO.,LTD.	

Level	Location no	Description	P/N	Specification	Remark
6	L6452	Inductor,Wire Wound,Chip	EAP62368801	LQH3NMN122M03E 1.2mH 20% - 80mA - - 46.8OHM - - SHIELD 3.0X3.0X1.5MM - R/TP MURATA MANUFACTURING CO.,LTD.	
6	C1300	Inductor,Multilayer, Chip	EAP61747501	LQP03TN3N6B02D 3.6NH 0.1NH - 400mA - - 0.3OHM 6GHZ 14 SHIELD NONE 0.6X0.3X0.3MM R/TP MURATA MANUFACTURING CO.,LTD.	
6	L8801 L8802	Inductor,Multilayer, Chip	ELCH0001425	LL1005-FHL82NJ 82NH 5% - 150mA 1.9OHM 1.15GHZ 10 SHIELD NONE 1.0X0.5X0.5MM R/TP TOKO, INC.	
6	C1716 L95107	Inductor,Multilayer, Chip	EAP61866901	LQP03TN2N0C02D 2NH 0.2NH - 600mA - - 0.15OHM 6GHZ 14 SHIELD 0 0.6X0.3X0.3MM R/TP MURATA MANUFACTURING CO.,LTD.	
6	U7601	IC,Signal Bridge	EAN63125901	ANX7812BH-AB-R slimport, HDMI to MyDP Tx, 4.5x4.5 VFBGA R/TP 49P ANALOGIX SEMICONDUCTOR	
6	FB4400 FB4401	Filter,Bead	EAM62070901	BLM03AX601SN1D 600 ohm 0.6X0.3X0.3 25% 0.85 ohm 0.25A SMD R/TP 2P 0 MURATA MANUFACTURING CO.,LTD.	
6	C1326 L1613 L1762	Inductor,Multilayer, Chip	EAP62226301	LQP03TG5N6J02D 5.6NH 5% - 250mA - - 0.88OHM 6GHZ 12 SHIELD - 0.6X0.3X0.3MM R/TP MURATA MANUFACTURING CO.,LTD.	
6	R2139	Resistor,Chip	ERHY0009584	MCR006YZPF24R0 24OHM 1% 1/20W 0603 R/TP - ROHM.	
6	C6116	Capacitor,Ceramic, Chip	ECCH0004904	GRM155R60J105K 1uF 10% 6.3V X5R -55TO+85C 1005 R/TP - MURATA MANUFACTURING CO.,LTD.	
6	C95115 C95116	Capacitor (High Frequency), Ceramic,Chip	EAE62947001	GRM0335C1E100J_H 10pF 5% 25V C0G - 55TO+125C 0603 R/TP 0.3+-0.03 :0.6+-0.03 W:0.3+-0.03 T:0.3+-0.03 MURATA MANUFACTURING CO.,LTD.	
6	L5200 L5201	Inductor,Multilayer, Chip	EAP62167601	MLG1608SR39JT 390NH 5% - 1mA - - 3OHM 300MHZ 10 SHIELD 0 1.6X0.8X0.8MM R/TP TDK KOREA COOPERATION	
6	ANT100 ANT101	C-Clip	EAG63730501	TE 1.1H C-CLIP 1P ANT TERMINAL STRAIGHT SMD T/REEL AU 2.5 X 1.0X 1.1(L X W X H) SERVEONE CO., LTD.	
6	R9505	Resistor,Chip	EBC61856101	RC0201JR-0722RL 22OHM 5% 1/20W 0603 R/TP - YAGEO CORPORATION	
6	L4102	Inductor,Wire Wound,Chip	EAP62526701	TFM252010GHM-2R2MTAA 2.2UH 20% - 2.5A 3.1 2.5 0.097OHM - - SHIELD 2.5X2.0X1.0 MM - R/TP TDK KOREA COOPERATION	

Level	Location no	Description	P/N	Specification	Remark
6	C18010 C18012	Capacitor,Ceramic, Chip	EAE63162401	GRM188R61E106M 10uF -20TO20% 25V X5R -55TO+85C 1608 R/TP Max 1.0T L:1.6+-0.2 W:0.8+-0.2 T:0.8+-0.2 MURATA MANUFACTURING CO.,LTD.	
6	R95109	Resistor,Chip	ERHY0042409	RC0201FR-0749R9L 49.9OHM 1% 1/20W 0603 R/TP - YAGEO CORPORATION	
6	PT1100	Thermistor,NTC	EBG61306601	NTCG104EF104FT 100KOHM 1% 35V 35A 4.25MK SMD R/TP - TDK CORPORATION	
6	U3100	IC,Mobile SDRAM	EAN62957701	H9CKNNNDATMTDR-NUH 16GBIT LPDDR3 1.7VTO1.95V 933MHz 5500ns FBGA TR 216P 3GB (24Gb) LPDDR3 PoP 216ball 933MHz (29nm 6Gb x 4, 15x15, MSM8974) SK hynix Inc	
6	C1401 C1408	Capacitor,Ceramic, Chip	EAE63143201	CL05A106MP8NUB8 10uF -20TO20% 10V X5R -55TO+85C 1005 R/TP L:1.0+-0.2, W:0.5+-0.2, T:0.8+-0.1 Max 0.9T, SEMCO Acoustic Noise MLCC THMC SAMSUNG ELECTRO-MECHANICS CO., LTD.	
6	R2146	Resistor,Chip	EBC63016501	RC0603F682CS 6.8KOHM 1% 1/20W 0603 R/TP - SAMSUNG ELECTRO-MECHANICS CO., LTD.	
6	L1702	Inductor,Multilayer, Chip	EAP62246201	LG HK 0603 10NJ-T 10NH 5% - 220mA - - 0.51OHM 2.9GHZ 5 SHIELD - 0.6X0.3X0.3MM R/TP TAIYO YUDEN CO.,LTD	
6	C4750 C7103 C7104	Capacitor,Ceramic, Chip	EAE62505701	CL10A105KB8NNNC 1uF 10% 50V X5R -55TO+85C 1608 R/TP 0.9T max. - SAMSUNG ELECTRO-MECHANICS CO., LTD.	
6	R4706	Resistor,Chip	ERHZ0000242	MCR01MZP5F2200 220OHM 1% 1/16W 1005 R/TP - ROHM.	
6	L1312	Capacitor (High Frequency), Ceramic,Chip	EAE62946201	GRM0335C1E2R2C_H 2.2pF 0.25PF 25V C0G -55TO+125C 0603 R/TP 0.3+-0.03 L:0.6+-0.03 W:0.3+-0.03 T:0.3+-0.03 MURATA MANUFACTURING CO.,LTD.	
6	L1301	Capacitor (High Frequency), Ceramic,Chip	EAE62923701	GRM0335C1ER80B_H 0.8pF 0.1PF 25V C0G -55TO+125C 0603 R/TP 0.3+-0.03 L:0.6+-0.03 W:0.3+-0.03 T:0.3+-0.03 MURATA MANUFACTURING CO.,LTD.	
6	C1307 C1321	Capacitor,Ceramic, Chip	ECZH0025911	GRM0335C1E120J 12pF 5% 25V C0G -55TO+125C 0603 R/TP - MURATA MANUFACTURING CO.,LTD.	
6	C1313	Capacitor (High Frequency), Ceramic,Chip	EAE62884201	GRM0335C1H2R7C_H 2.7pF 0.25PF 50V C0G -55TO+125C 0603 R/TP 0.3+-0.03 L:0.6+-0.03 W:0.3+-0.03 T:0.3+-0.03 MURATA MANUFACTURING CO.,LTD.	

Level	Location no	Description	P/N	Specification	Remark
6	L1605	Capacitor (High Frequency), Ceramic,Chip	EAE62884301	GRM0335C1H5R6C_H 5.6pF 0.25PF 50V C0G - 55TO+125C 0603 R/TP 0.3+-0.03 L:0.6+-0.03 W:0.3+-0.03 T:0.3+-0.03 MURATA MANUFACTURING CO.,LTD.	
6	L2300	Inductor,Multilayer, Chip	EAP62807301	LQM18FN2R2M00D 2.2UH 20% - 120mA 0.12 0.12 0.52OHM 80MHZ - SHIELD - 1.6X0.8X1.0MM R/TP MURATA MANUFACTURING CO.,LTD.	
6	L1709	Inductor,Multilayer, Chip	EAP62266401	LQP03TN2N7B02D 2.7NH 0.1NH - 500mA - - 0.2OHM 6GHZ 14 SHIELD - 0.6X0.3X0.3MM R/TP MURATA MANUFACTURING CO.,LTD.	
6	L1132	Inductor,Multilayer, Chip	EAP62246301	LG HK 0603 15NJ-T 15NH 5% - 180mA - - 0.71OHM 5HZ 2.3G SHIELD - 0.6X0.3X0.3MM R/TP TAIYO YUDEN CO.,LTD	
5	SAD010000	Software,Mobile	SAD34885101	Android KK Base AS98510a - NORTH AMERICA QCT -	
4	EBR071500	PCB Assembly, Main,Insert	EBR79027001	LGVS985.AVRZTN 1.1 Main	
5	RAA050100	Resin,PC	BRAH0001305	HIFILL 3075B . . NONE	
5	EAD00	Cable,Assembly	EAD63050001	WFL2-2LP-04N1-A76BALG UFL-LP-066 UFL-LP-066 0.06M 2 WHITE N N HIROSE KOREA CO.,LTD	
5	RAA050101	Resin,PC	BRAH0001304	: EFC-3A03-20-MH(Sn99%/Ag0.3%/Cu0.7%)) . . NONE	
5	EBR070500	PCB Assembly,Flexible	EBR78781801	LGF400L.ALGTWH 1.0 Flexible	
6	EBR070400	PCB Assembly, Flexible,SMT	EBR78781901	LGF400L.ALGTWH 1.0 Flexible	
7	EBR070200	PCB Assembly, Flexible, SMT Bottom	EBR78743101	LGF400L.ALGTWH 1.0 Flexible	
8	C7903 C7904 C7914	Capacitor,Ceramic, Chip	EAE62726601	CL03A225MQ3CRNC 2.2uF -20TO20% 6.3V X5R - 55TO+85C 0603 R/TP 0.3T - SAMSUNG ELECTRO-MECHANICS CO., LTD.	
8	D5001 D5002 D5003 D5004 D5005	Diode,TVS	EAH61995401	RClamp0521Z.TNT 5V 6V min. 25V 4A 100W SLP0603P2X3 R/TP 2P 1 SEMTECH INTERNATIONAL AG	

Level	Location no	Description	P/N	Specification	Remark
8	U5000	IC,Proximity	EAN63405901	VL6180 TOF sensor, Proximity,Ambient light, measurable range : 0~10cm,0.3~100kLux 4.8x2.8x1.0mm LGA R/TP 12P - ST MICROELECTRONICS ASIA PACIFIC PTE LTD.	
8	C11006 C1127 C3202 C3204 C4200 C6101 C6102 C6104 C6105 C6107 C6108 C6210 C7206 C7902 C8501	Capacitor,Ceramic, Chip	ECCH0009101	C0603X5R0J104KT00NN 0.1uF 10% 6.3V X5R -55TO+85C 0603 R/TP - TDK CORPORATION	
7	EBR070300	PCB Assembly,Flexible, SMT Top	EBR78782001	LGF400L.ALGTWH 1.0 Flexible	
8	EAX010700	PCB,Flexible	EAX65783301	LGF400L.ALGTWH 1.0 POLYI Multi 2 0.2 Flexible	
6	EBR070100	PCB Assembly,Flexible,Insert	EBR79063401	LGF400L.ALGTWH 1.0 Flexible	
5	EAA030101	PIFA Antenna,GPS	EAA63384602	ACB-00240 MULTI -5DB 3.0 FPCB Type - GPS Tape ACE TECHNOLOGIES CORPORATION	
5	EAA030102	PIFA Antenna,WiFi	EAA63384502	ACB-00241 DUAL -5DB 3.0 FPCB Type - BT Tape ACE TECHNOLOGIES CORPORATION	
5	EAA030100	PIFA Antenna,Multiple	EAA63325302	ACA-00334 MULTI -5DB 3.0 FPCB Type - LTE Tape ACE TECHNOLOGIES CORPORATION	
5	EAA030103	PIFA Antenna,RF	EAA63325202	ACA-00333 SINGLE -5DB 3.0 FPCB Type - MRD Tape ACE TECHNOLOGIES CORPORATION	
3	EAB01	Speaker Module	EAB63248902	EME1511DJ08 Nd-Fe-B 700mW 8OHM 88DB 950HZ 1511 3.0t FSD Upgrade 0.8cc SOLDER EM-TECH	
2	EAD010000	Cable,Assembly	EAD62627001	KCA-ET-3-0255 USB USB 1.2M 5 WHITE UL N KSD CO., LTD	
3	EAA030100	PIFA Antenna,RF	EAA63404701	1NFCLG043 SINGLE -5DB 3.0 FPCB Type - NFC Tape IMTECH	

Level	Location no	Description	P/N	Specification	Remark
1	SAF010100	Software Assembly, Common	SAF30440012	LGAS985.ABPTWH KK -	
2	SAD010100	Software, Application	SAD34661905	Android KK - PCSuiteV - - WORLD WIDE QCT -	
2	SAD010600	Software,OSP	SAD34683106	Windows Android KK - -	
2	SAD010500	Software,USB Driver	SAD34683206	Windows -	

11.3 Accessory

Note: This Chapterisused for reference,Part order is ordered by SBOM standard on GCSC

Level	Location no	Description	P/N	Specification	Remark
3	MBM062601	Card,Quick Reference	MBM64717001	PRINTING LGAS985.ABPTWH ZZ:Without Color QSG of AS985 in Spanish	
3	MBM000000	Card	MBM64717101	PRINTING LGAS985.ABPTWH ZZ:Without Color PSWG of AS985	
3	MBM062600	Card,Quick Reference	MBM64756501	PRINTING LGAS985.ABPTWH ZZ:Without Color QSG of AS985 in English	
2	EAC00	Rechargeable Battery,Lithium Ion	EAC62378702	BL-53YH-VZW-LGC 3.8V 2.94AH 580mAH 5.2 x 51 x 71 5.5 x 51 x 74.5 BLACK Bar - LG Chem,LTD.	
2	EAY060000	Adapters	EAY62754310	MCS-04WD2_W_VERIZON 90Vac ~ 264Vac 5V 1.8A 50/60Hz UL, CSA NONE DC PIN PLUG - DONG DO ELECTRONICS CO., LTD	
2	MFL053800	Manual,Operation	MFL68681001	PRINTING LGAS985.ABPTWH ZZ:Without Color United States ENGLISH+ SPANISH User Guide of AS985	