Internal Use Only

LG

Service Manual

LG-D160

Date: March, 2014 / Issue 1.0

Table Of Contents

1. INTRODUCTION

1.1 Purpose

This manual provides the information necessary to repair, calibration, description and download the features of this model.

1.2 Regulatory Information

A. Security

Toll fraud, the unauthorized use of telecommunications system by an unauthorized part (for example, persons other than your company's employees, agents, subcontractors, or person working on your company's behalf) can result in substantial additional charges for your telecommunications services. System users are responsible for the security of own system. There are may be risks of toll fraud associated with your telecommunications system. System users are responsible for programming and configuring the equipment to prevent unauthorized use. The manufacturer does not warrant that this product is immune from the above case but will prevent unauthorized use of common carrier telecommunication service of facilities accessed through or connected to it. The manufacturer will not be responsible for any charges that result from such unauthorized use.

B. Incidence of Harm

If a telephone company determines that the equipment provided to customer is faulty and possibly causing harm or interruption in service to the telephone network, it should disconnect telephone service until repair can be done. A telephone company may temporarily disconnect service as long as repair is not done.

C. Changes in Service

A local telephone company may make changes in its communications facilities or procedure. If these changes could reasonably be expected to affect the use of the phones or compatibility with the net work, the telephone company is required to give advanced written notice to the user, allowing the user to take appropriate steps to maintain telephone service.

D. Maintenance Limitation

Maintenance limitations on the phones must be performed only by the manufacturer or its authorized agent. The user may not make any changes and/or repairs expect as specifically noted in this manual. Therefore, note that unauthorized alternations or repair may affect the regulatory status of the system and may void any remaining warranty.

E. Notice of Radiated Emission

This model complies with rules regarding radiation and radio frequency emission as defined by local regulatory agencies. In accordance with these agencies, you may be required to provide information such as the following to the end user.

F. Pictures

The pictures in this manual are for illustrative purposes only; your actual hardware may look slightly different.

G. Interference and Attenuation

A phone may interfere with sensitive laboratory equipment, medical equipment, etc. Interference from unsuppressed engines or electric motors may cause problems.

H. Electrostatic Sensitive Devices

ATTENTION

Boards, which contain Electrostatic Sensitive Device (ESD), are indicated by the sign. Following information is ESD handling:

- Service personnel should ground themselves by using a wrist strap when exchange system boards.
- When repairs are made to a system board, they should spread the floor with anti-static mat which is also grounded.
- Use a suitable, grounded soldering iron.
- Keep sensitive parts in these protective packages until these are used.
- When returning system boards or parts like EEPROM to the factory, use the protective package as described.

1.3 Specification

KEY FEATURES

- Android 4.4-(KitKat)
- 3.5" Touch Screen HVGA (480 x 320)
- 3MP FF
- 3G Mobile Hotspot

ENHANCED USER EXPERIENCE

- Android 4.4
- Proximity Sensor – locks the touch screen and buttons while talking on the phone
- Motion Sensor – Accelerometer
- USB Charging via Computer
- Airplane Mode (RF Off)

DESIGN

- Sleek and Stylish Design
- 3.5" HVGA LCD Screen
- Capacitive Touch Screen – Plastic with fast and accurate response
- Micro USB/Charging Port

CAMERA/VIDEO

- 3MP FF
- Camera Resolutions: 2048 x 1536, 1280 x 960 Pixels
- Image Editor: zoom, rotate, crop images
- Brightness, ISO, White Balance,* Color Effects, Timer
- Cheese shutter – take photo with voice command.
- Video Resolutions: 640 x 480 320 x 240 176 x 144 Pixels

MULTIMEDIA

- Music Player for MP3, WMA, and Unprotected AAC
- Stereo Sound via Headset or *Bluetooth*
- Music Library – Organized by Artists, Albums, Songs, and Playlists
- Repeat and Shuffle Music Playback Modes

BLUETOOTH®

- Version: 4.0
- Supported Profiles: headset, hands-free, object push, advanced audio distribution (stereo), audio/video remote control, file transfer, phone book access, message access, serial port
- Listen to Music with Optional Stereo *Bluetooth* Headset**
- Send User-Generated Pictures (JPEG) and Videos via *Bluetooth* Wireless Technology

*Depends on available memory.

**Accessories sold separately.

VOICE/AUDIO

- One-Touch Speakerphone*
- Speaker-Independent Voice Commands
- Voice-Activated Dialing
- Text to Speech
- MP3 Music Ringer Support

TOOLS & DATA

- Android Apps: Alarm/Clock, Browser, Calculator, Calendar (Corporate or Google), Camera, Contacts, Email, Gallery, Gmail, Google+, Maps, Messaging, Messenger, Music Player, Phone, Places, Play Books, Play Movies, Play Music, Play Store, Talk, Video Player, Voice Recorder, Youtube
- Navigation – spoken turn-by-turn directions showing real-time traffic
- Wi-Fi Connectivity – IEEE 802.11 b/g/n
- A-GPS Support for Enhanced Location Accuracy

SPECIFICATIONS

- Technology: GSM/WCMDA
- Frequencies: GSM 850,900,1800,1900 WCDMA 2100, 900
- Data Transmission: WCMDA, GPRS
- Dimensions: 109.4X59X11.9(mm)
- Display: 3.5", HVGA (480 x 320) pixels
- Standard Battery: 1,540 [mAh]

ACCESSORIES

- Standard Battery
- Travel Adapter and USB Cable*
- Stereo Headset

2. PERFORMANCE

2.1 Product Name

LG-D160 : WCDMA900/2100+EGSM/GSM850/DCS/PCS(HSDPA 14.4Mbps HSUPA 5.76Mbps)

2.2 Supporting Standard

Item	Feature	Comment
Supporting Standard	WCDMA(FDD1,8)/EGSM/GSM850/DCS1800/PCS1900 with seamless handover Phase 2+(include AMR) SIM Toolkit : Class 1, 2, 3, C-E	
Frequency Range	WCDMA(FDD1) TX : 1920 – 1980 MHz WCDMA(FDD1) RX : 2110 – 2170 MHz WCDMA(FDD8) TX : 880 – 915 MHz WCDMA(FDD8) RX : 925 –960 MHz EGSM TX : 880 – 915 MHz EGSM RX : 925 – 960 MHz GSM850 TX : 824 – 849 MHz GSM850 RX : 869 – 894 MHz GSM900 TX : 880 – 915 MHz GSM900 RX : 925 – 960 MHz DCS1800 TX :1710 – 1785 MHz DCS1800 RX : 1805 – 1880 MHz PCS1900 TX : 1850 – 1910 MHz PCS1900 RX : 1930 – 1990 MHz	
Application Standard		

2.3 Main Parts : GSM Solution

Item	Part Name	Comment
AP Chip	MSM8210	
CP Chip	MSM8210	

2.4 HW Features

List	Type / Spec.	
1. Phone Type	DOP Type	
2. Size	109.4X59X11.9 (mm)	
3. Weight	113.2g (with battery)	
4. Battery	1,540mAh (typ.), 1,500mAh(min) (Li-Ion)	
5. Chipset	MSM8210	
6. Memory	4GB(eMMC) +4Gb(LPDDR2)	
7. LCD	Size	3.5 inch
	Dot	480(H) X 320(V)
	Color	262K/16.7M dithering
	Display Type	A-si TFT, Transmissive Type
	NTSC	65%
	Contrast Ratio	1:500
	Pixel Pitch	0.051*RGB(v)*0.153(H)
	Color temperature	5000 ~ 9000(K) (typ. 6500K)
8. Main Camera (3M)	Type	CMOS image sensor
	Resolution	2048(H) X 1536(V) pixels.

	Frame Rate	15 fps@ QXGA, 30 fps@ XGA
	View Angle	65°
	Image Scaling Down	3M, 2M,1M,VGA
	Pixel x size	1.4um x1.4um
10. Audio	1) MIDI	MIDI
	2) Mono	19 X 10 X 3T Speaker, Receiver Dual mode
	3) Receiver	19 X 10 X 3T Speaker, Receiver Dual mode
11. Bluetooth	Effective Distance	10M
	Distance	0 m ~ 10 m (depend on environment)
12. WLAN	standard	IEEE 802.11 b/g/n
	Throughput	Max 40Mbps (SDIO Driver performance)
	depend on environment	0 ~ 50m (depend on environment)
13. GPS	type	A-GPS

1) RSSI Display

BAR	WCDMA	WCDMA
5	Over -89 ±2dBm	Over -91 ±2dBm
5 -> 4	89± 2dBm	91± 2dBm
4 -> 3	94± 2dBm	96± 2dBm
3 -> 2	100± 2dBm	99± 2dBm
2 -> 1	104± 2dBm	103± 2dBm
1 -> 0	110± 2dBm	105± 2dBm

2) Charging Time

Under 3 hour 30min (1540mAh battery, 850mA TA)

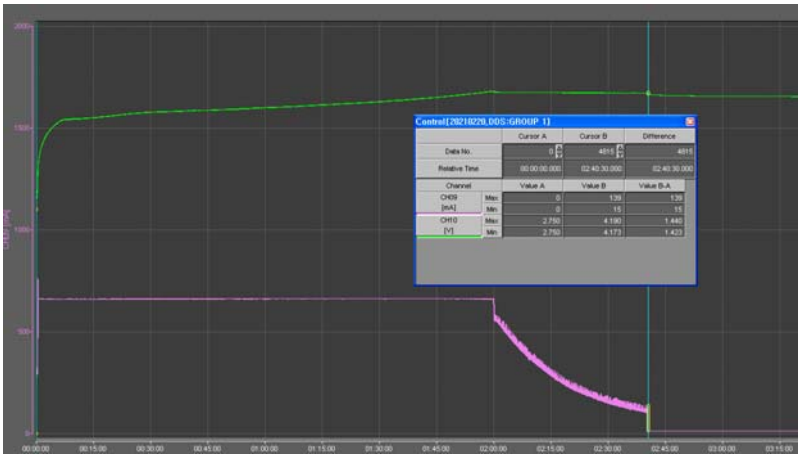

3) Travel Charger

Input : 100 ~ 240 V, 50/60 Hz

Output : 5.0V, 850 mA

4) Battery Type

Li-ion Battery, 1540 mAh(typ.)

Standard Voltage : 3.7 V, Battery Full Charge Voltage : 4.1V ~ 4.2V

5) Current Consumption

** Test condition for Standby current consumption should be as below.

: Measurement time 1hr, with Agilent & CMT JIG

Item	Specification	
	WCDMA	GSM
1. Sleep Mode	Under 5mA	Under 5mA
2. Sleep : connector Ear jack	Under 6mA	Under 6mA
3. Current(Sleep & Idle AVG)	Under 10mA @ DRX 7	Under 10mA @ P.P 5
4. BT Connected idle	Under 15mA	Under 15mA
5. Talk Mode	- Max Pwr Under 600mA @ Avg - Tx 10dBm Under 300 mA @ Avg	GSM LVL 5 under 300 mA @ Avg
6. Power Off Mode	under 300uA	Under 300 uA
7. Backup Battery	under 5uA	under 5uA

6) Battery Bar

Battery Bar	Specification	
BAR 20 (Full)	98% over	remain%
BAR 20 --> 19	98% ◊ 97%	
BAR 19 --> 18	93% ◊ 92%	
BAR 18 --> 17	88% ◊ 87%	
BAR 17 --> 16	83% ◊ 82%	
BAR 16 --> 15	78% ◊ 77%	
BAR 15 --> 14	73% ◊ 72%	
BAR 14 --> 13	68% ◊ 67%	
BAR 13 --> 12	63% ◊ 62%	
BAR 12 --> 11	58% ◊ 57%	
BAR 11 --> 10	53% ◊ 52%	
BAR 10 --> 9	48% ◊ 47%	
BAR 9 --> 8	43% ◊ 42%	
BAR 8 --> 7	38% ◊ 37%	
BAR 7 --> 6	33% ◊ 32%	
BAR 6 --> 5	28% ◊ 27%	
BAR 5 --> 4	23% ◊ 22%	
BAR 4 --> 3	16% ◊ 15%	
BAR 3 --> 2	13% ◊ 12%	
BAR 2 --> 1	8% ◊ 7%	
BAR 1 --> 0	3% ◊ 2%	
Low Battery Pop-up	4% ~ 15% : One Time popup (No call)	
Critical Low Battery Pop-up	0% ~ 3% : Every Level change popup (No call)	
Power Off	1%	

2.5 SW Features

Item	Feature	Comment
RSSI	0 ~ 5 Levels	0 ~ 4 => 0 ~ 5
Battery Charging	0 ~ 20 Levels	
Key Volume	0 ~ 7 Level	
Audio Volume	0 ~ 7 Level	
Time / Date Display	Yes	
Multi-Language	Yes	Bosnian, Catalan, Czech, Danish, German, Spanish(España), Euskera, French, Macedonian, Gallego, Croatian, Icelandic, Italian, Hungarian, Dutch, Norwegian, Polish, Portuguese(Portugal), Romanian(Română), Serbian(Cyrillic), Slovak, Slovenian, Finnish, Swedish, Turkish, Greek, Bulgarian, Estonian, Latvian, Lithuanian, Russian, Ukrainian, English, Chinese, Korean
Quick Access Mode	Dialing/ Contact /Message/Menu	The user can edit as desired icon. (Menu icon excluded) Icon on the menu is the LONG-PRESS. DRAG icon to where you want to register.
PC Sync	Yes	
Speed Dial	Yes	
Profile	Yes	not same with feature phone setting
CLIP / CLIR	Yes	
Phone Book	Name / Number / Email / Website/Postal addresses/Organizations/Groups/ Birthday / Ringtone	There is no limitation on the number of items. It depends on available memory amount.Ringtone can

		be specified in the detail view screen.
Last Dial Number	Yes	Last Dial Numbers, Last Received Numbers and Last Missed Numbers can store up to a total of 500.
Last Received Number	Yes	Last Dial Numbers, Last Received Numbers and Last Missed Numbers can store up to a total of 500.
Last Missed Number	Yes	Last Dial Numbers, Last Received Numbers and Last Missed Numbers can store up to a total of 500.
Search by Number / Name	Name	
Group	Yes	There is no limitation on the number of items. It depends on available memory amount.
Fixed Dial Number	Yes	
Service Dial Number	No	
Own Number	Yes	Read only (add/edit/delete are not supported)
Voice Memo	Yes	
Call Reminder	No	
Network Selection	Automatic	
Mute	Yes	
Call Divert	Yes	
Call Barring	Yes	
Call Charge (AoC)	No	

Call Duration	No	
SMS (EMS)	There is no limitation on the number of items. It depends on available memory amount.	EMS does not support.
SMS Over GPRS	No	
EMS Melody / Picture	No	
Send / Receive / Save	No	
MMS MPEG4 Send / Receive / Save	Yes	
Long Message	MAX 2000 characters	
Cell Broadcast	Yes	
Download	Over the Web	
Game	No	
Calendar	Yes	
Memo	Yes	
World Clock	Yes	
Unit Convert	No	
Stop Watch	Yes	
Wall Paper	Yes	
WAP Browser	No	Support only web browser based on chrome. WAP stack and wml are not supported.
Download Melody / Wallpaper	Yes	Over web browser
SIM Lock	Yes	Operator Dependent

SIM Toolkit	Class 1, 2, 3, C	
MMS	Yes	Google MMS Client
EONS	Yes	
CPHS	Yes	V4.2
ENS	No	
Camera	Yes	3M FF / Digital Zoom : x4
JAVA	No	
Voice Dial	No	
IrDa	No	
Bluetooth	Yes	Version : v4.0 Profile : OPP, FTP, HFP 1.6, AVRCP 1.3, MAP, PBAP, SAP, A2DP, HSP, SPP
FM radio	Yes	
GPRS	Yes	Class 12
EDGE	Yes	Class 12
Hold / Retrieve	Yes	
Conference Call	Yes	Max. 6
DTMF	Yes	
Memo pad	No	
TTY	No	
AMR	Yes	
SyncML	Yes	
IM	No	
Email	Yes	

2.6 HW SPEC

1) WCDMA transmitter specification

Item	Spec.	Min	Typ.	Max	Unit
Maximum Output Power	Power class Ⅲ	21.0	23.0	25.0	dBm/3.84MHz
Frequency Accuracy	-	-200	-	+200	Hz
Minimum Output Power	-	-	-	-50	dBm/3.84MHz
Occupied Bandwidth	-	-	-	4.6	MHz
Adjacent Channel Leakage Power Ratio	Δf = ± 5MHz	-	-	-33	dBm/3.84MHz
	Δf = ± 10MHz	-	-	-43	dBm/3.84MHz
Error Vector Magnitude(EVM)	-	-	-	17	%
Peak Code Domain Error	-	-	-	15	dBm/3.84MHz
Open Loop Output Power	Ior =-106.7dBm/3.84MHz	-46.7	-	-28.7	dBm/3.84MHz
	Ior =-65.7dBm/3.84MHz	-23.0	-	-5.0	dBm/3.84MHz
	Ior =-25.0dBm/3.84MHz	-0.0	-	14.0	dBm/3.84MHz
Transmit Off Power	-	-	-	-56	dBm/3.84MHz
Spectrum Emission Mask	Δf = 2.5~3.5MHz	-35-15 * (Δf-2.5)			dBc/30KHz
	Δf = 3.5~7.5MHz	-35-1 * (Δf-3.5)			dBc/1MHz
	Δf = 7.5~8.5MHz	-39 10 * (Δf-7.5)			dBc/1MHz
	Δf = 8.5~12.5MHz	-49			dBc/1MHz

Transmit Spurious Emission	9kHz ~ 150kHz			-36	dBm
	150kHz ~ 30MHz			-36	dBm
	30MHz ~ 1GHz			-36	dBm
	1GHz ~ 12.5GHz			-30	dBm

2) WCDMA receiver specification

Item	Specification
Receive Frequency	BD1: 2110 ~ 2170 MHz BD5: 869 MHz ~ 894 MHz
Reference Sensitivity Level <REFÎ$_{or}$>	Band1 : BER < 0.001 when Îor = -106.7 dBm / 3.84 MHz Band5 : BER < 0.001 when Îor = -104.7 dBm / 3.84 MHz
Maximum Input Level	BER < 0.001 when Îor = -25 dBm / 3.84 MHz
Adjacent Channel Selectivity (ACS)	ACS > 33 dB where BER < 0.001 when Îor = <REFÎ$_{or}$> + 14 dB / 3.84 MHz & Ioac = –52 dBm / 3.84 MHz @ ±5 MHz
Blocking Characteristic	BER < 0.001 when Îor = <REFÎ$_{or}$> + 3 dB / 3.84 MHz & Iblocking = -56 dBm / 3.84 MHz @ Fuw(offset) = ±10 MHz or Iblocking = -44 dBm / 3.84 MHz @ Fuw(offset) = ±15 MHz
Spurious Response	BER < 0.001 when Îor = <REFÎ$_{or}$> + 3 dB / 3.84 MHz & Iblocking = -44 dBm
Intermodulation	BER < 0.001 when Îor= <REFÎ$_{or}$> + 3 dB / 3.84 MHz & Iouw1 = -46 dBm @ Fuw1(offset) = ±10 MHz & Iouw2 = -46 dBm / 3.84 MHz @ Fuw2(offset) = ±20 MHz
Spurious Emissions	< -57 dBm / 100 kHz BW @ 9 kHz ≤ f < 1 GHz < -47 dBm / 1 MHz BW @ 1 GHz ≤ f ≤ 12.75 GHz
Inner Loop Power Control In Uplink	Adjust output(TPC command) cmd 1dB 2dB 3dB +1 +0.5/1.5 +1/3 +1.5/4 0 -0.5/+0.5 -0.5/+0.5 -0.5/+0.5 -1 -0.5/-1.5 -1/-3 -1.5/-4 group(10equal command group) +1 +8/+12 +16/+24

3) HSDPA transmitter specification

	Item	Spec.		Min	Typ.	Max	Unit
Trandsmitter	5.2.A Maximum Output Power with HS-DPCCH	1/15 ≤ βc/βd ≤ 12/15 13/15 ≤ βc/βd ≤ 15/8 15/7 ≤ βc/βd ≤ 15/0		21.0 20 19	23.0 23.0 22.5	25.0 25 25	dBm/3.84MHz
	5.7A HS-DPCCH	MAX / 0dBm	Step 0	0 dBm +/- 1 dB			dB
			Step 1 – Step 0	6 dB +/- 2.3 dB			dB
			Step 2 – Step 3	1 dB +/- 0.6 dB			dB
			Step 5 – Step 4	0 dB +/- 0.6 dB			dB
			Step 6 – Step 7	5 dB +/- 2.3 dB			dB
	5.9A Spectrum Emission Mask with HS-DPCCH	Δf = 2.5~3.5MHz		-35-15 * (Δf-2.5)			dBc/30KHz
		Δf = 3.5~7.5MHz		-35-1 * (Δf-3.5)			dBc/1MHz
		Δf = 7.5~8.5MHz		-39 10 * (Δf-7.5)			dBc/1MHz
		Δf = 8.5~12.5MHz		-49			dBc/1MHz
	5.10A Adjacent Channel Leakage Power Ratio with HS-DPCCH	Δf = ± 5MHz		-	-	-33	dBm/3.84MHz
		Δf = ± 10MHz		-	-	-43	dBm/3.84MHz
	5.13.1A Error Vector Magnitude (EVM) with HS-DPCCH	MAX Power -20 dBm		-	-	17.5	%
Receiver	6.3A Maximum Input Level for HS-PDSCH Reception	Pin = -25dBm		-	-	10	BLER(%)

4) GSM receiver specification

Item	Spec.
Phase Error	Rms : 5° Peak : 20 °
Frequency Error	GSM : 0.1 ppm DCS/PCS : 0.1 ppm
EMC(Radiated Spurious Emission Disturbance)	GSM/DCS : < -28dBm
Transmitter Output power and Burst Timing	GSM : 5dBm – 33dBm ± 3dB DCS/PCS : 0dBm – 30dBm ± 3dB
Burst Timing	<3.69us
Spectrum due to modulation out to less than 1800kHz offset	200kHz : -36dBm 600kHz : -51dBm/-56dBm
Spectrum due to modulation out to larger than 1800kHz offset to the edge of the transmit band	GSM : 1800-3000kHz :< -63dBc(-46dBm) 3000kHz-6000kHz : <-65dBc(-46dBm) 6000kHz < : < -71dBc(-46dBm) DCS : 1800-3000kHz :< -65dBc(-51dBm) 6000kHz < : < -73dBc(-51dBm)
Spectrum due to switching transient	400kHz : -19dBm/-22dBm(5/0), -23dBm 600kHz : -21dBm/-24dBm(5/0), -26dBm
Reference Sensitivity – TCH/FS	Class II(RBER) : -105dBm(2.439%)
Usable receiver input level range	0.012(-15 - -40dBm)
Intermodulation rejection – Speech channels	± 800kHz, ± 1600kHz : -98dBm/-96dBm (2.439%)
AM Suppression - GSM : -31dBm - DCS : -29dBm	-98dBm/-96dBm (2.439%)
Timing Advance	± 0.5T

5) Bluetooth transmitter specification

Item	Spec.		Min	Typ.	Max	Unit
Output Power	DH5 PRBS9	Power (Class I)	0	-	20	dBm
Power Density	DH5 PRBS9	@100kHz RBW		-	+20	dBm
Power Control	DH1 PRBS9	Step size	2	-	8	dB
		Power(min)		-	4	dBm
Frequency Range	DH5 PRBS9	-30dBc @100kHz RBW	2400	-	2483.5	MHz
Tx Output Spectrum (20dB BW)	DH5 PRBS9	$\Delta f = f_H - f_L$		-	1	MHz
Tx Output Spectrum (Adjacent Output Power)	DH5 PRBS9	@M-N = 2		-	-20	dBm
		@M-N ≥ 3		-	-40	dBm
Modulation Index	DH5 11110000	$f1_{AVG}$	140	-	175	kHz
	DH5 10101010	$f2_{MAX}$	115	-		kHz
		$f2_{AVG}/f1_{AVG}$	0.8	-		
Initial Carrier Freq. Tolerance	DH5 PRBS9		-75	-	+75	kHz
Carrier Frequency Drift	DH1 10101010	Freq. Drift	-25	-	+25	kHz
		Drift Rate	-20	-	+20	kHz/50us
	DH3 10101010	Freq. Drift	-40	-	+40	kHz
		Drift Rate	-20	-	+20	kHz/50us
	DH5 10101010	Freq. Drift	-40	-	+40	kHz
		Drift Rate	-20	-	+20	kHz/50us

6) Bluetooth receiver specification

Item	Spec. BER=0.1%		Min	Typ.	Max	Unit
Sensitivity (Single Slot Packet)	DH1 PRBS9 Input power @BT_w	-		-	-70	dBm
Sensitivity (Multi Slot Packet)	DH5 PRBS9 Input power @BT_w	-		-	-70	dBm
C/I Performance*	DH1 PRBS9 Input power @BT_i	C/I@Co-Channel -60dBm @ BT		-	11	dB
		C/I @1MHz -60dBm@ BT		-	0	
		C/I @2MHz -60dBm@ BT		-	-30	
		C/I @≥3MHz -67dBm@ BT		-40	-37	
		C/I @Image -67dBm@ BT		-	-9	
		C/I @ Image±1MHz -67dBm@ BT		-	-20	
Blocking Performance	DH1 PRBS9 Input power @CW	30M ~2 GHz -67dBm@ BT	-10	-		dBm
		2 ~ 2.4 GHz -67dBm@ BT	-27	-		
		2.5 ~ 3 GHz -67dBm@ BT	-27	-		
		3 ~ 12.75 GHz -67dBm@ BT	-10	-		
Intermodulation Performance	DH1 PRBS9 Input power @CW_i	Δf = +5MHz (CW_i) Δf = +10MHz (BT_i) -64dBm@ BT_w	-39	-		dBm
		Δf = -5MHz (CW_i) Δf = -10MHz (BT_i) -64dBm@ BT_w	-39	-		dBm
Maximum Input Level	DH1 PRBS9 Input power @BT_w	-	-20	-		dBm

7) WLAN 802.11b transceiver specification

Item	Specification
Transmit Frequency	2400 MHz ~ 2483.5 MHz (CH1~CH13)
Tx Power Level	≤ 20dBm under (Europe), ≤ 30dBm under (USA)
Frequency Tolerance	within ±25 PPM
Chip clock Frequency Tolerance	within ±25 PPM
Spectrum Mask	≤ -30 @ fc-22MHz< f <fc-11MHz and fc+11MHz< f <fc+22MHz ≤ -50 @ f < fc-22MHz and f > fc+22MHz
Power ramp on/off time	≤ 2us
Carrier Suppression	≤ -15dB
Modulation Accuracy (Peak EVM)	≤ 35%
Spurious Emissions	< -36 dBm @ 30MHz ~ 1GHz < -30 dBm above @ 1GHz ~ 12.75GHz < -47 dBm @ 1.8GHz ~ 1.9GHz < -47 dBm @ 5.15GHz ~ 5.3GHz
Rx Min input Sensitivity	≤ -76dBm(1Mbps,2Mbps,5.5Mbps,11Mbps) @ FER ≤ 8%
Rx Max input Sensitivity	≥ -10dBm(1Mbps,2Mbps,5.5Mbps,11Mbps) @ FER ≤ 8%
Rx Adjacent Channel Rejection	≥ 35dB @FER ≤ 8%, interference input signal -70dBm@fc±25MHz(11Mbps)

8) WLAN 802.11g transceiver specification

Item	Specification
Transmit Frequency	2400 MHz ~ 2483.5 MHz (CH1~CH13)
Tx Power Level	≤ 20dBm under (Europe), ≤ 30dBm under (USA)
Frequency Tolerance	within ±25 PPM
Chip clock Frequency Tolerance	within ±25 PPM
Spectrum Mask	≤ -20 @ ±11MHz offset (9Mhz ~ 11MHz) ≤ -28 @ ±20MHz offset (11MHz ~ 20Mhz) ≤ -40 @ ±30MHz offset (20MHz ~ 30Mhz)
Transmitter constellation error (rms EVM)	≤ -5dB
Spurious Emissions	< -36 dBm @ 30MHz ~ 1GHz < -30 dBm above @ 1GHz ~ 12.75GHz < -47 dBm @ 1.8GHz ~ 1.9GHz < -47 dBm @ 5.15GHz ~ 5.3GHz
Rx Min input Sensitivity	PER ≤ 10% -82dBm@6Mbps, -81dBm@9Mbps, -79dBm@12Mbps -77dBm@18Mbps, -74dBm@24Mbps, -70dBm@36Mbps -66dBm@48Mbps, -65dBm@54Mbps
Rx Max input Sensitivity	≥ -20dBm(6,9,12,18,24,36,48,54Mbps) @ PER ≤ 10%
Rx Adjacent Channel Rejection	PER ≤ 10%, ACR ≥ 16dB@6Mbps, ACR ≥ 15dB@9Mbps, ACR ≥ 13dB@12Mbps, ACR ≥ 11dB@18Mbps, ACR ≥ 8dB@24Mbps, ACR ≥ 4dB@36Mbps ACR ≥ 0dB@48Mbps, ACR ≥ -1dB@54Mbps ※ ACR shall be measured by setting the desired signal's strength 3 dB above the rate-dependent sensitivity specified in min input sensitivity

9) WLAN 802.11n transceiver specification

Item	Specification
Transmit Frequency	2400 MHz ~ 2483.5 MHz (CH1~CH13)
Tx Power Level	≤ 20dBm under (Europe), ≤ 30dBm under (USA)
Frequency Tolerance	within ±25 PPM
Chip clock Frequency Tolerance	within ±25 PPM
Spectrum Mask	≤ -20 @ ±11MHz offset (9Mhz ~ 11MHz) ≤ -28 @ ±20MHz offset (11MHz ~ 20Mhz) ≤ -45 @ ±30MHz offset (20MHz ~ 30Mhz)
Transmitter constellation error (rms EVM)	≤ -5dB@6.5Mbps, ≤ -10dB@13Mbps, ≤ -13dB@19.5Mbps, ≤ -16dB@26Mbps, ≤ -19dB@39Mbps, ≤ -22dB@52Mbps, ≤ -25dB@58.5Mbps, ≤ -28dB@65Mbps
Spurious Emissions	< -36 dBm @ 30MHz ~ 1GHz < -30 dBm above @ 1GHz ~ 12.75GHz < -47 dBm @ 1.8GHz ~ 1.9GHz < -47 dBm @ 5.15GHz ~ 5.3GHz
Rx Min input Sensitivity	PER ≤ 10% -82dBm@6.5Mbps, -79dBm@13Mbps, -77dBm@19.5Mbps -74dBm@26Mbps, -70dBm@39Mbps, -66dBm@52Mbps -65dBm@58.5Mbps, -64dBm@65Mbps
Rx Max input Sensitivity	≥ -20dBm(6.5,13,19.5,26,39,52,58.5,65Mbps) @ PER ≤ 10%
Rx Adjacent Channel Rejection	PER ≤ 10%, ACR ≥ 16dB@6.5Mbps, ACR ≥ 13dB@13Mbps, ACR ≥ 11dB@19.5Mbps, ACR ≥ 8dB@26Mbps, ACR ≥ 4dB@39Mbps, ACR ≥ 0dB@52Mbps ACR ≥ -1dB@58.5Mbps, ACR ≥ -2dB@65Mbps ※ ACR shall be measured by setting the desired signal's strength 3 dB above the rate-dependent sensitivity specified in min input sensitivity

10) GPS receiver specification

Item	Spec.
Sensitivity Test	Success rate ≥ 60% @ -154 dBm

3. TROUBLE SHOOTING

3.1 WCDMA Rx Part Troubleshooting

3.1.1 WCDMA_B1 Rx

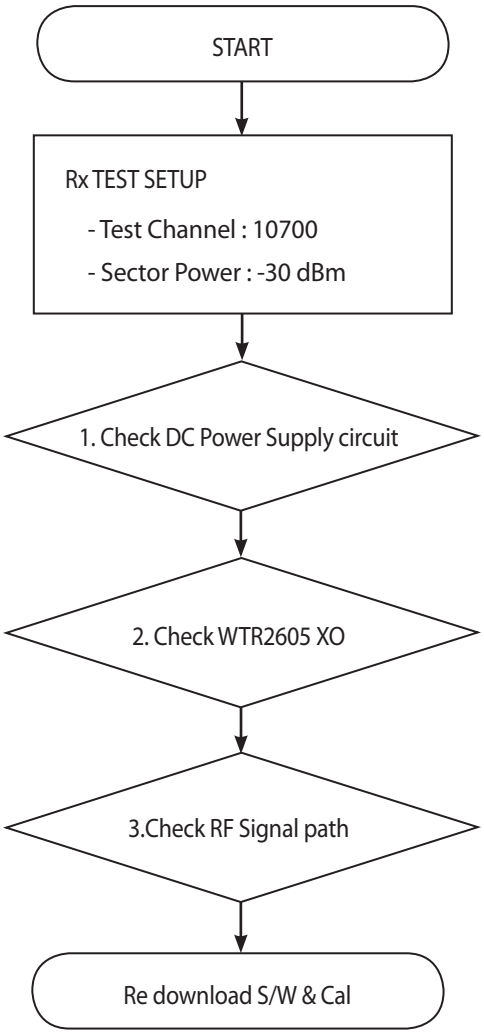

* There are no Test Points on the IQ Data Line. So It is impossible to check the IQ Data Wave form

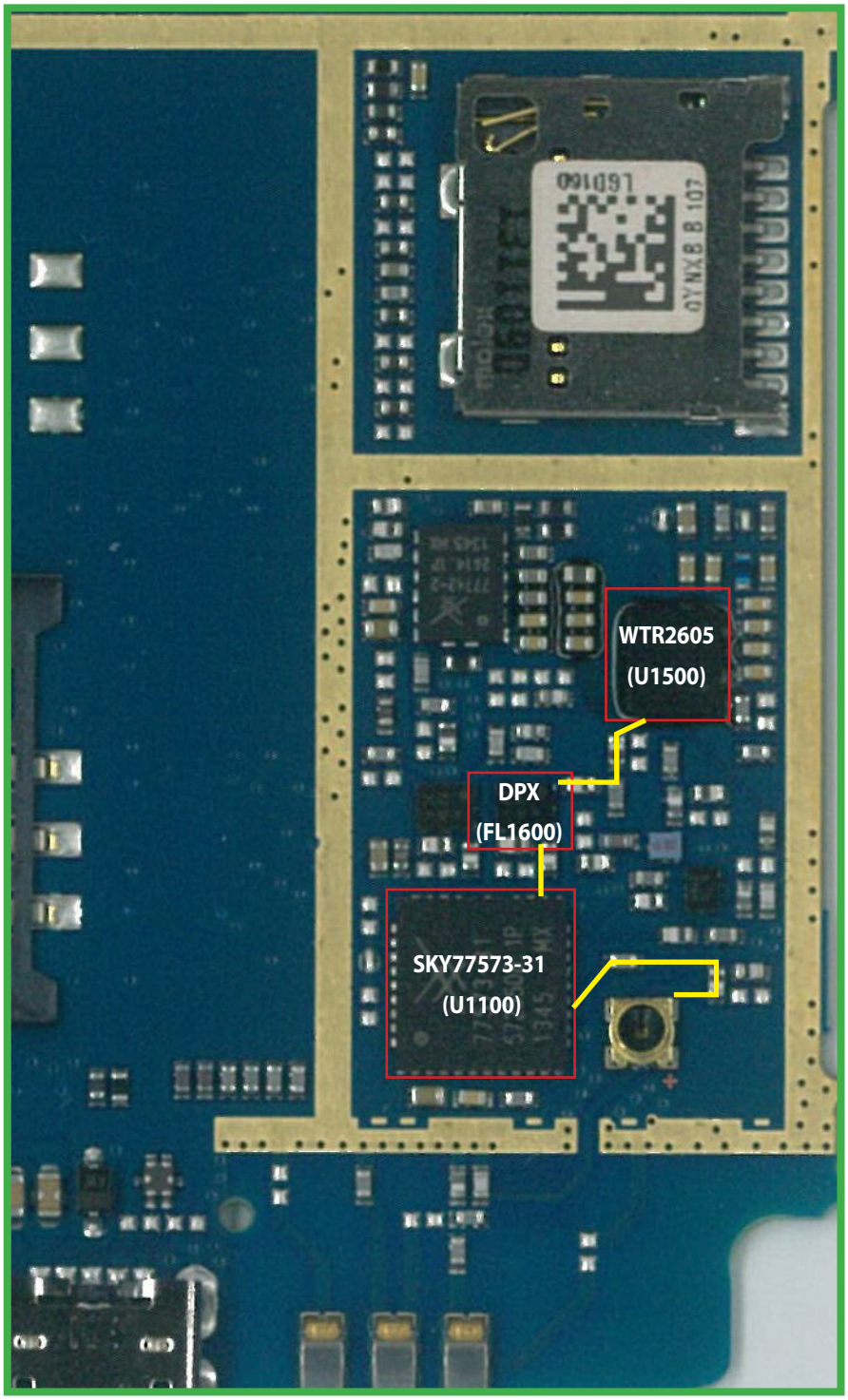

3.1.1.1 Checking DC Power supply circuit

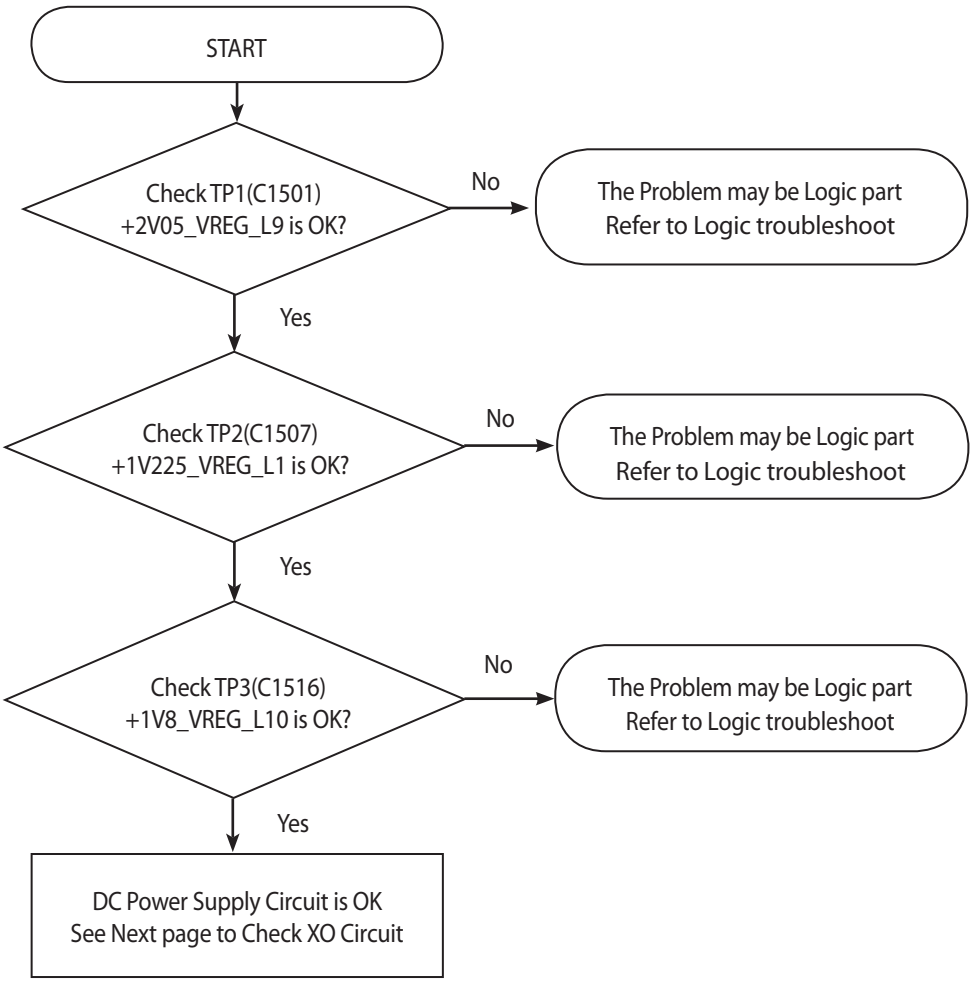

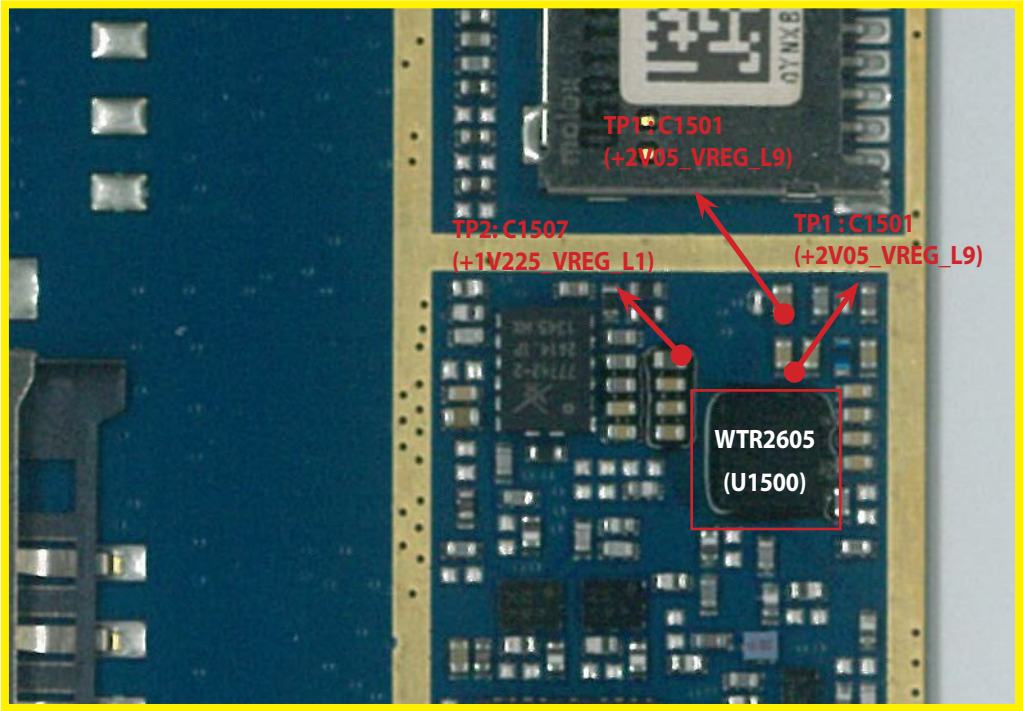

<Main Bot>

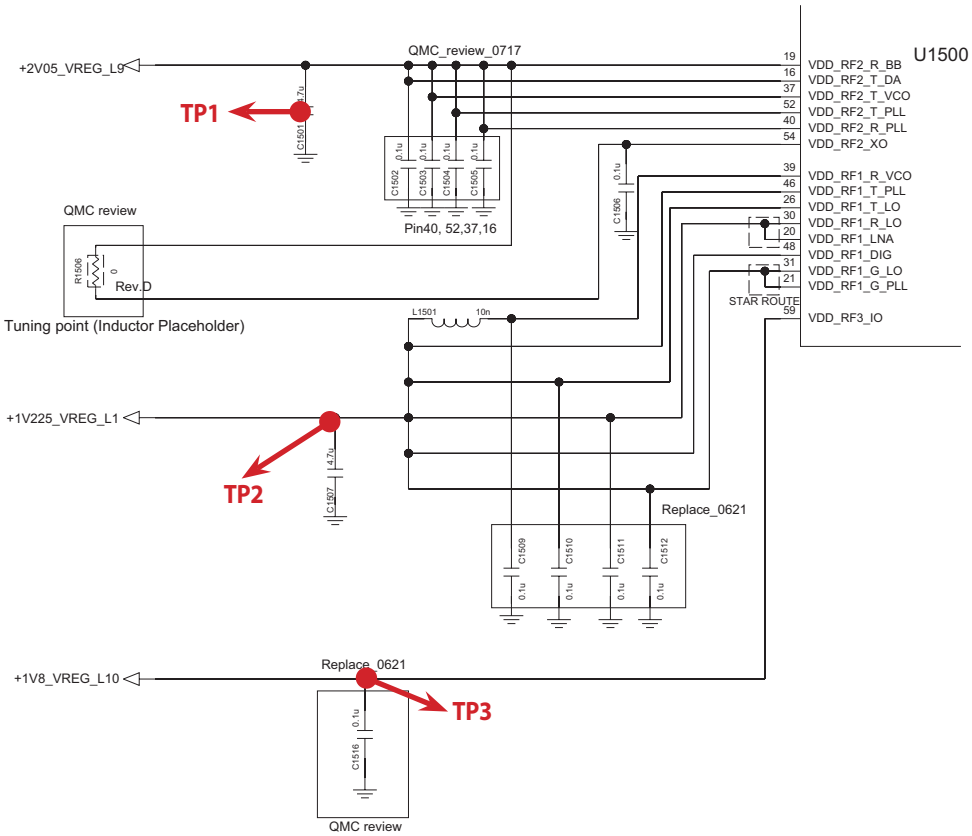

3.1.1.2 Checking XO circuit

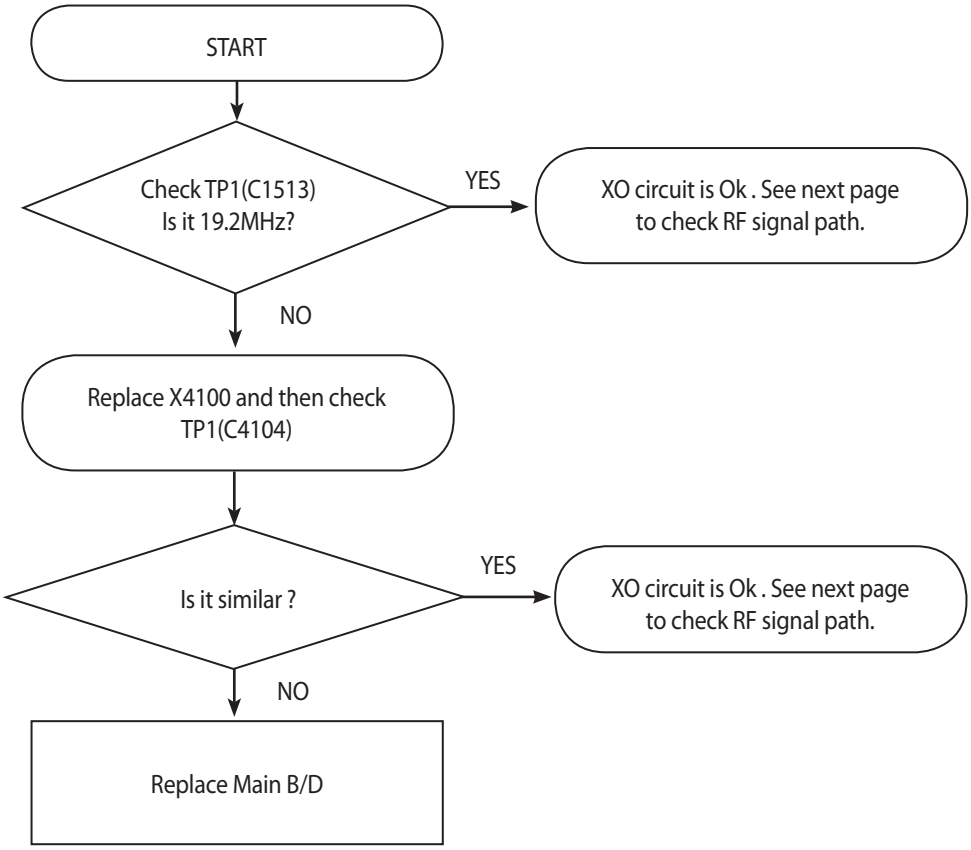

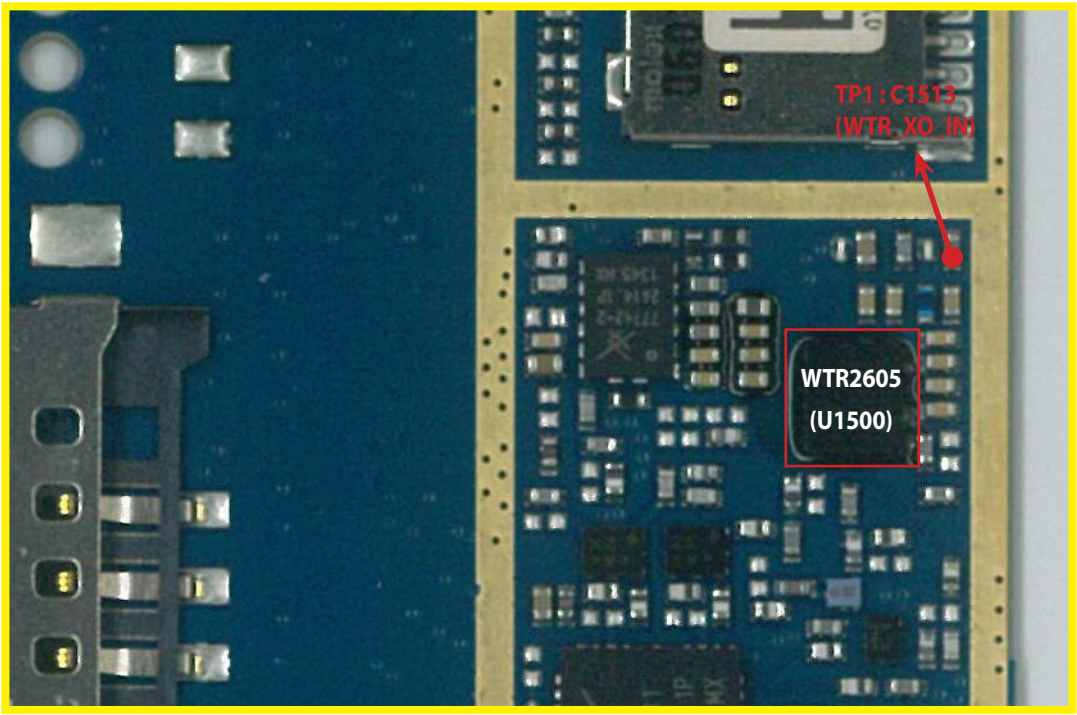

<Main Bot>

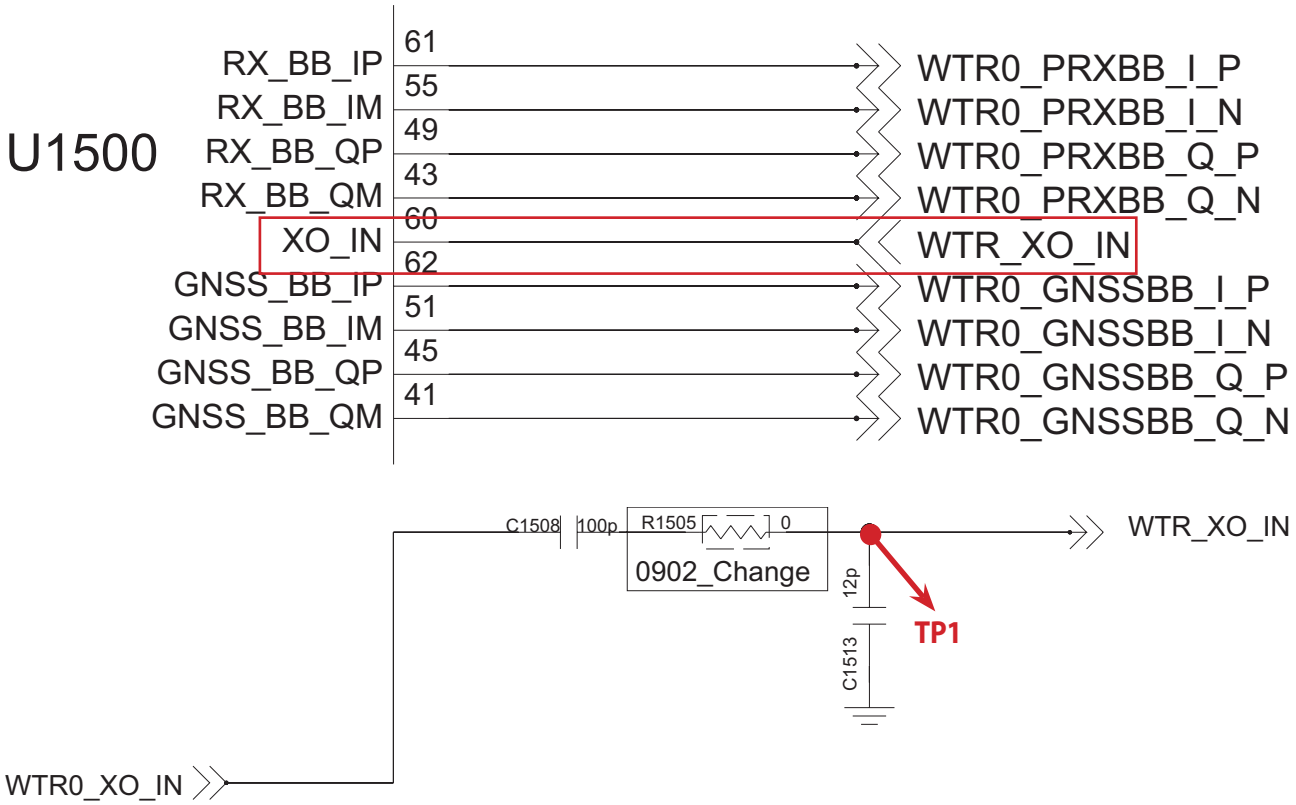

3.1.1.3 Checking RF signal path (TX Module)

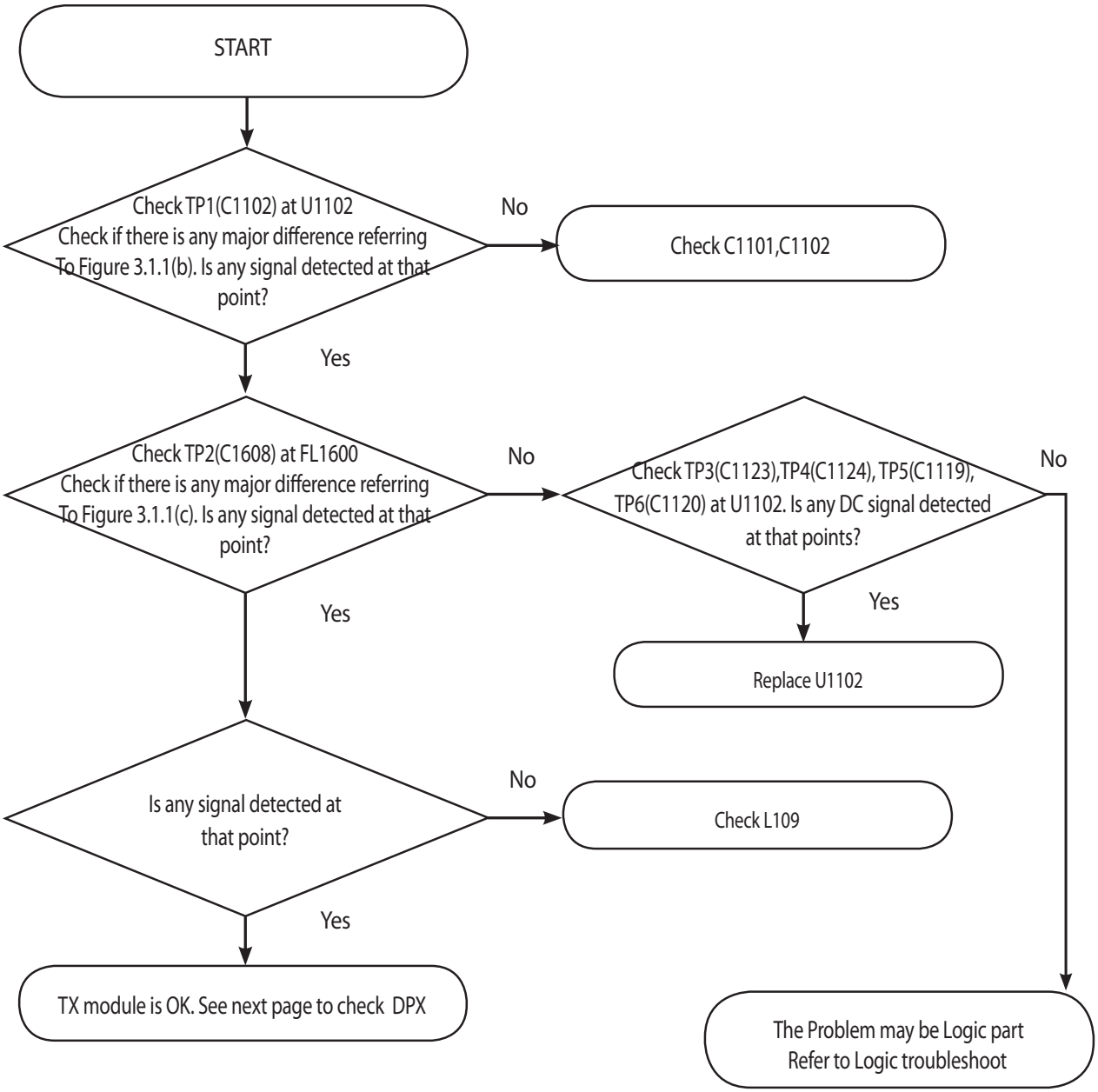

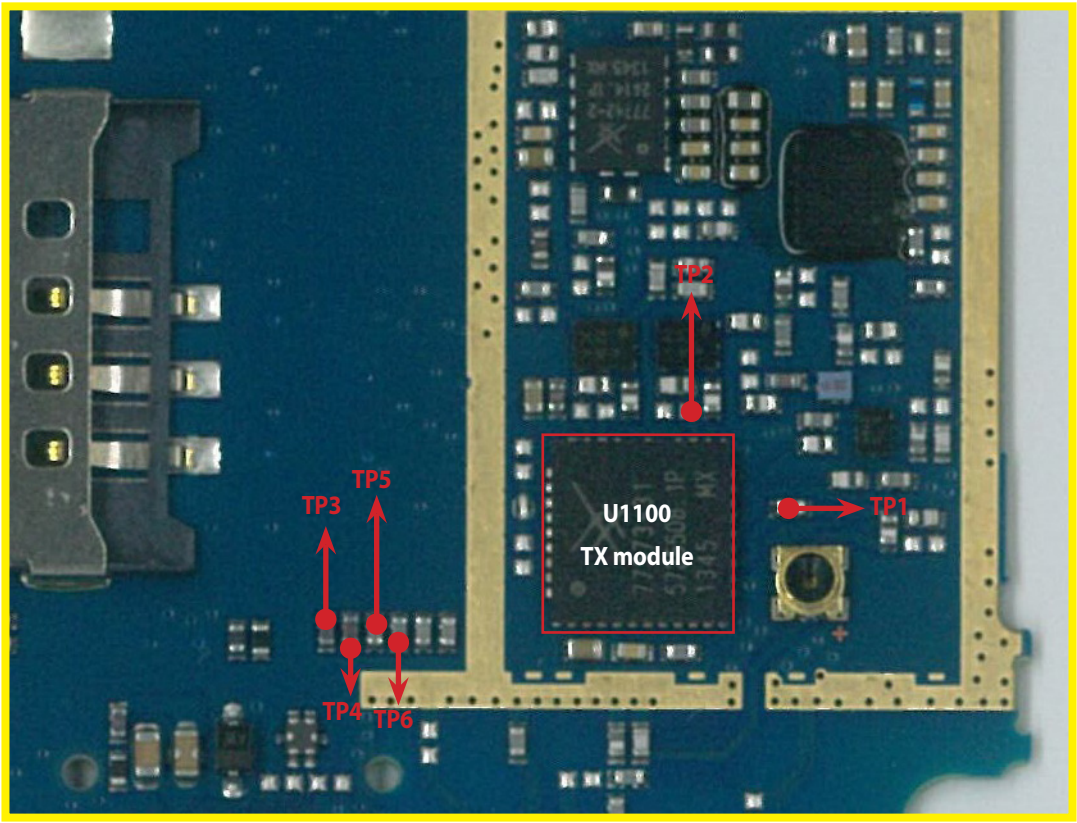

<Main Bot>

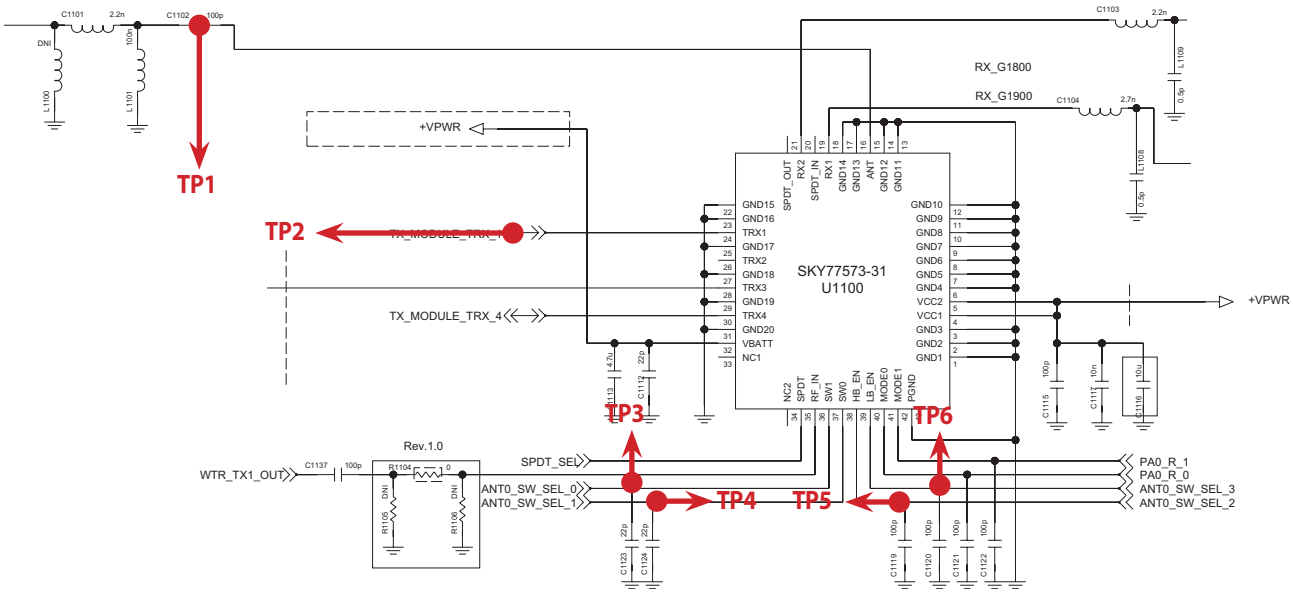

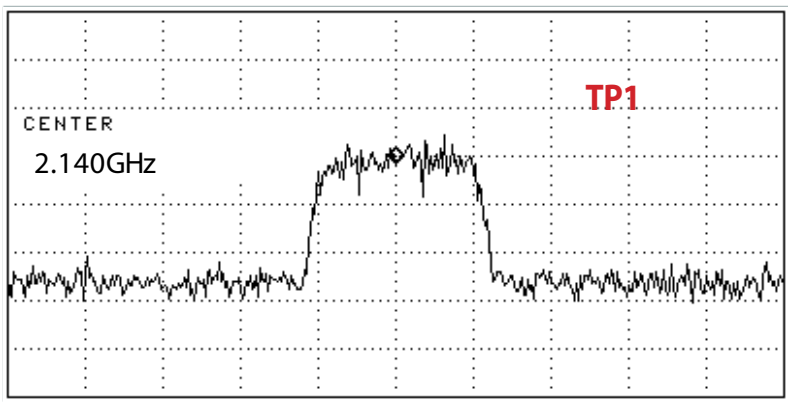

Figure 3.1.1 (b)

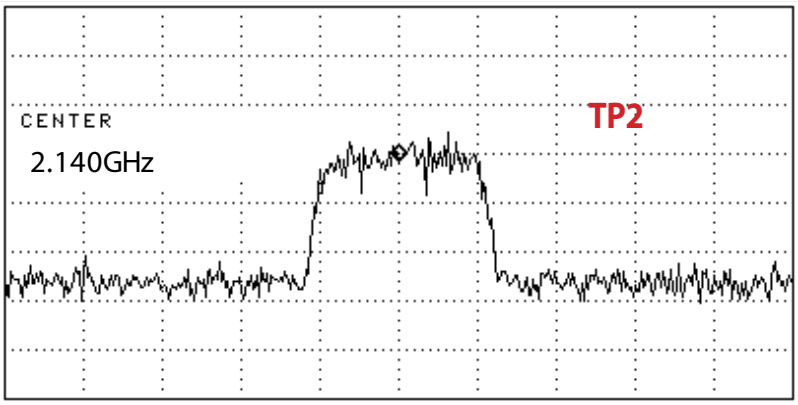

Figure 3.1.1 (c)

3.1.1.4 Checking RF signal path (Duplexer)

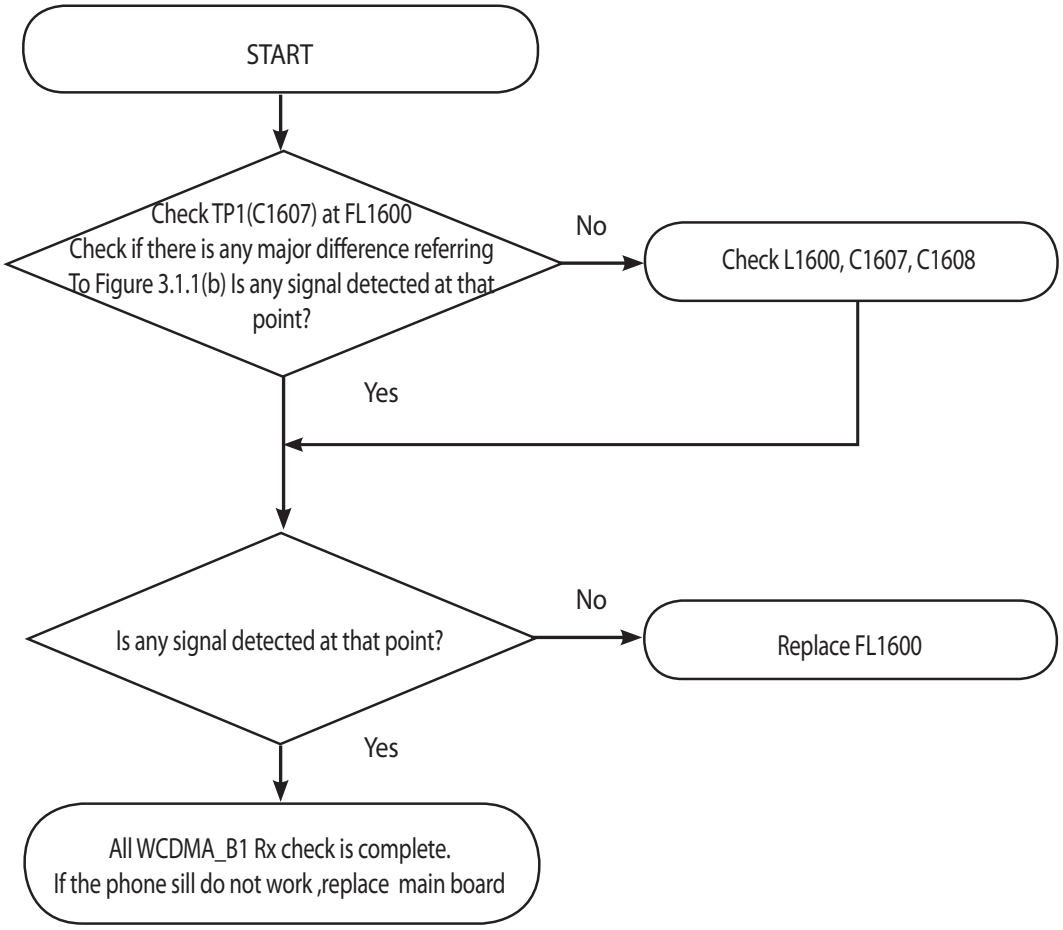

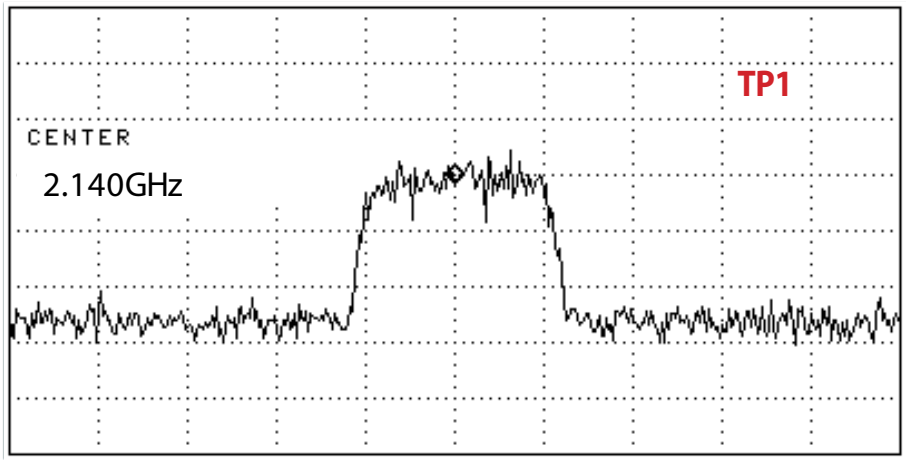

Figure 3.1.1 (b)

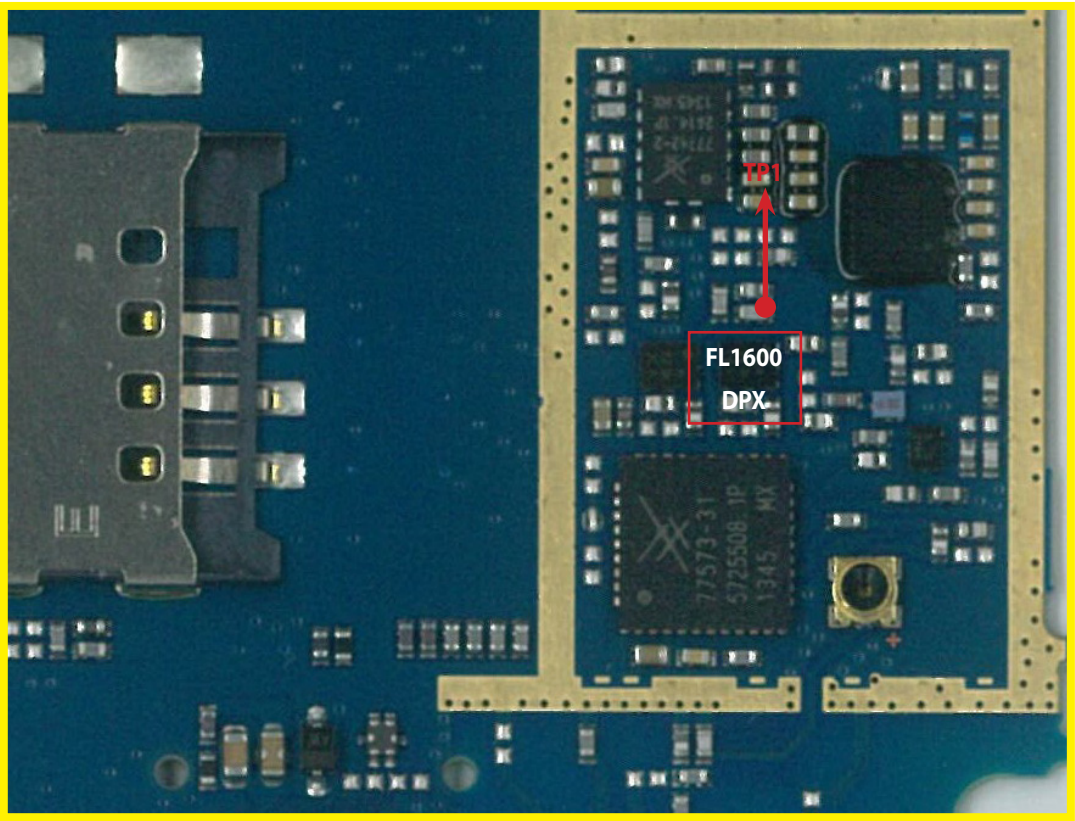

<Main Bot>

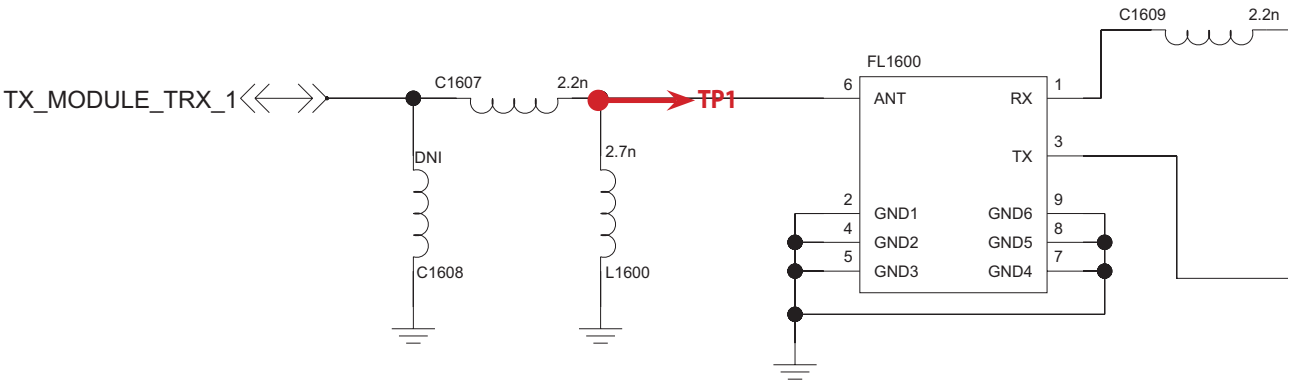

3.1.2 WCDMA_B8 Rx

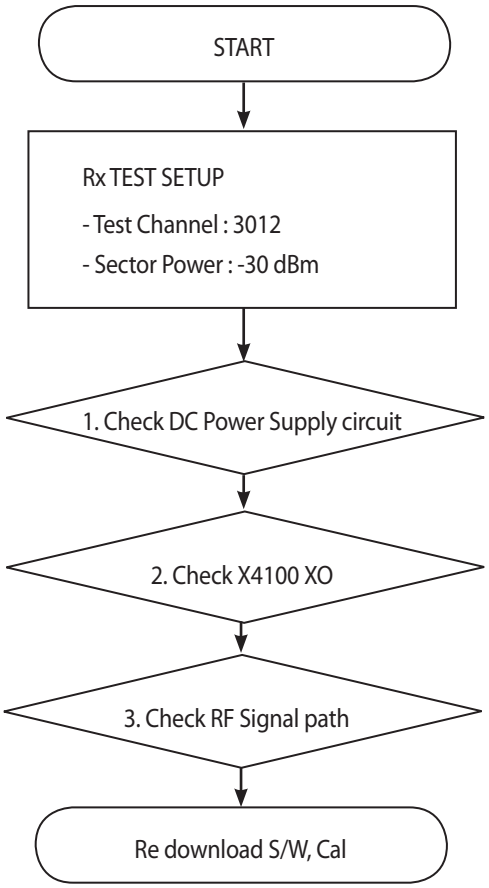

* There are no Test Points on the IQ Data Line. So It is impossible to check the IQ Data Wave form

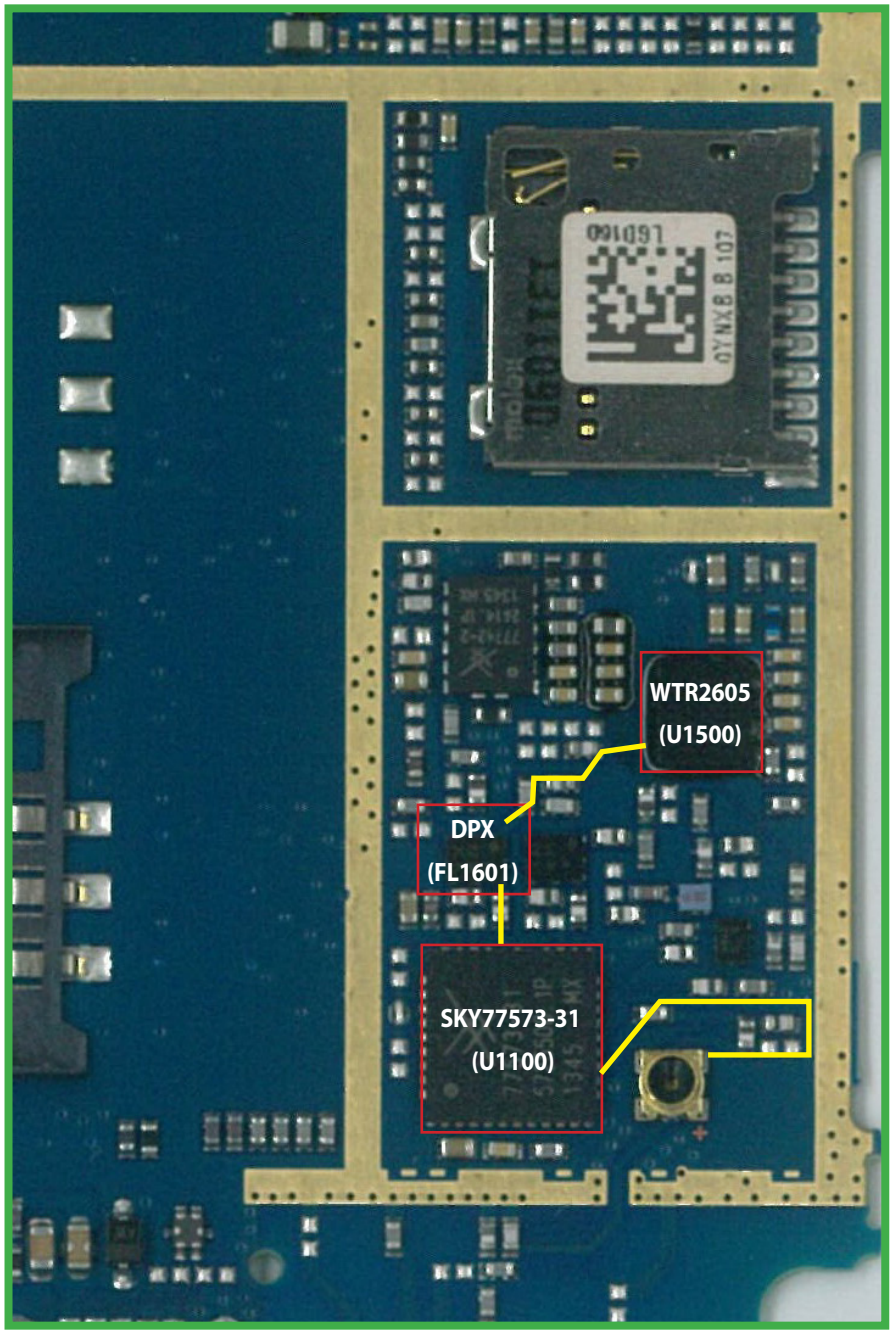

3.1.2.1 Checking DC Power supply circuit

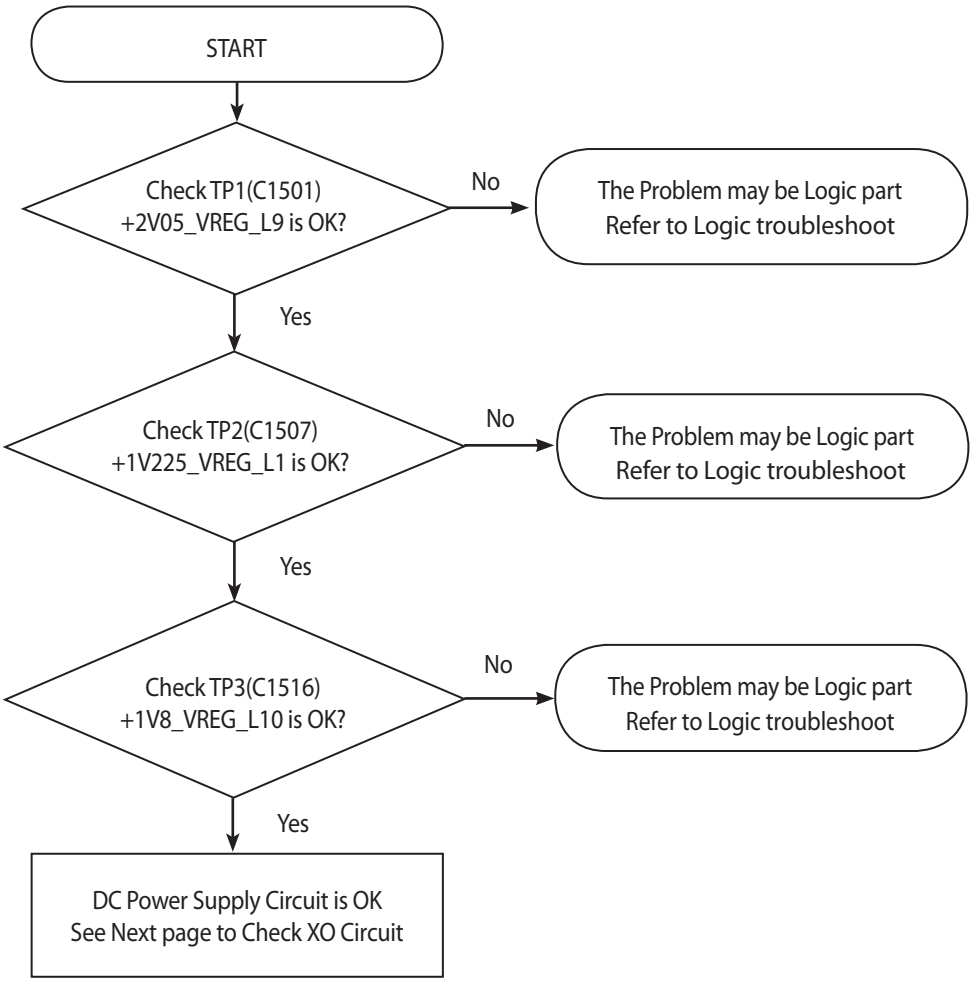

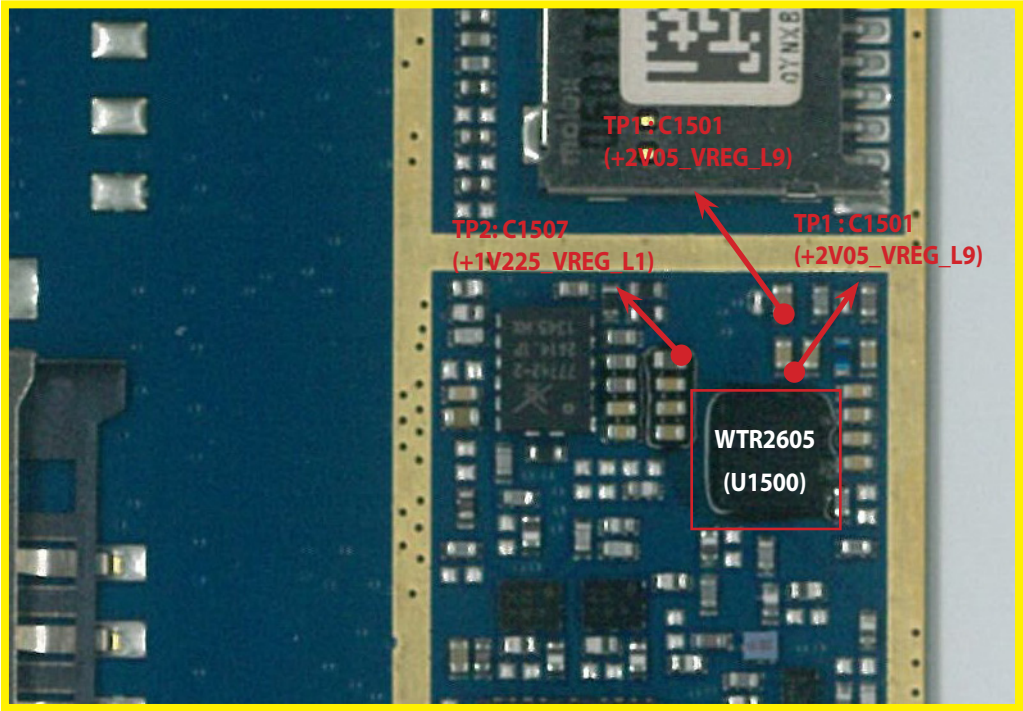

<Main Bot>

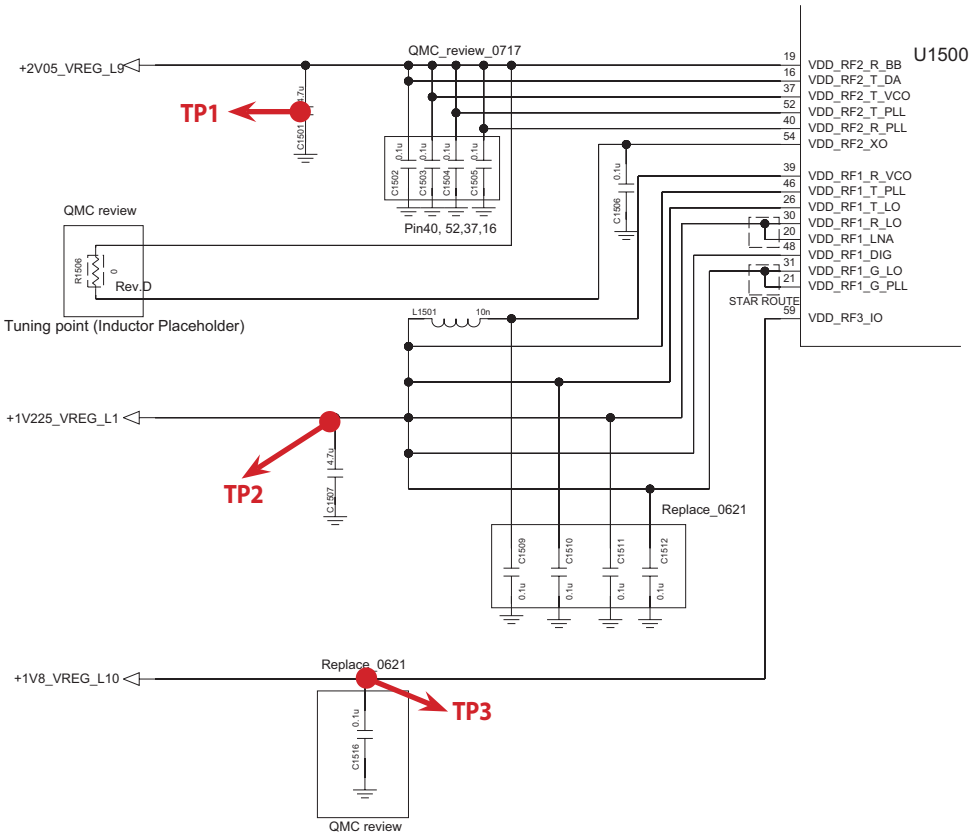

3.1.2.2 Checking XO circuit

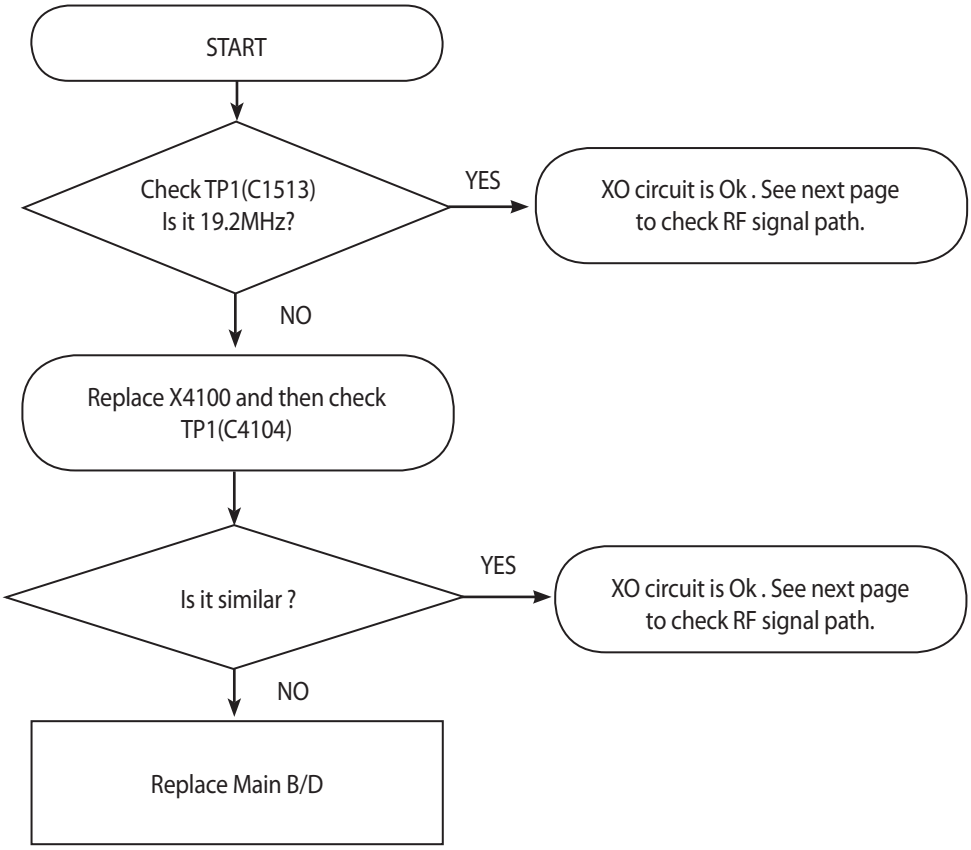

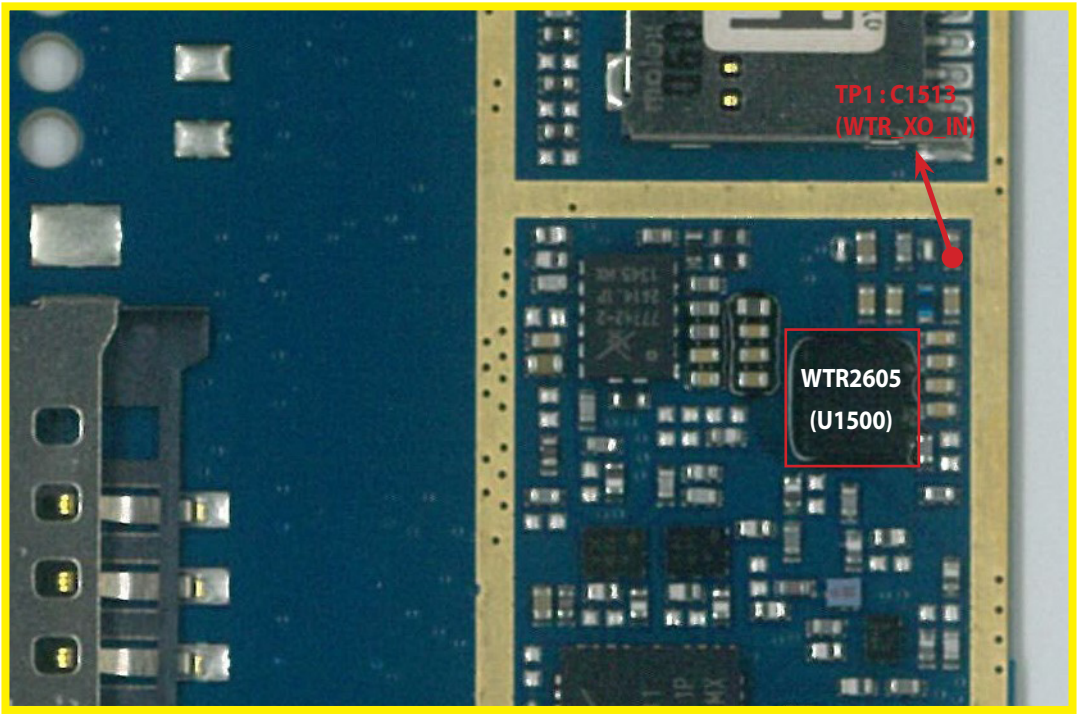

<Main Bot>

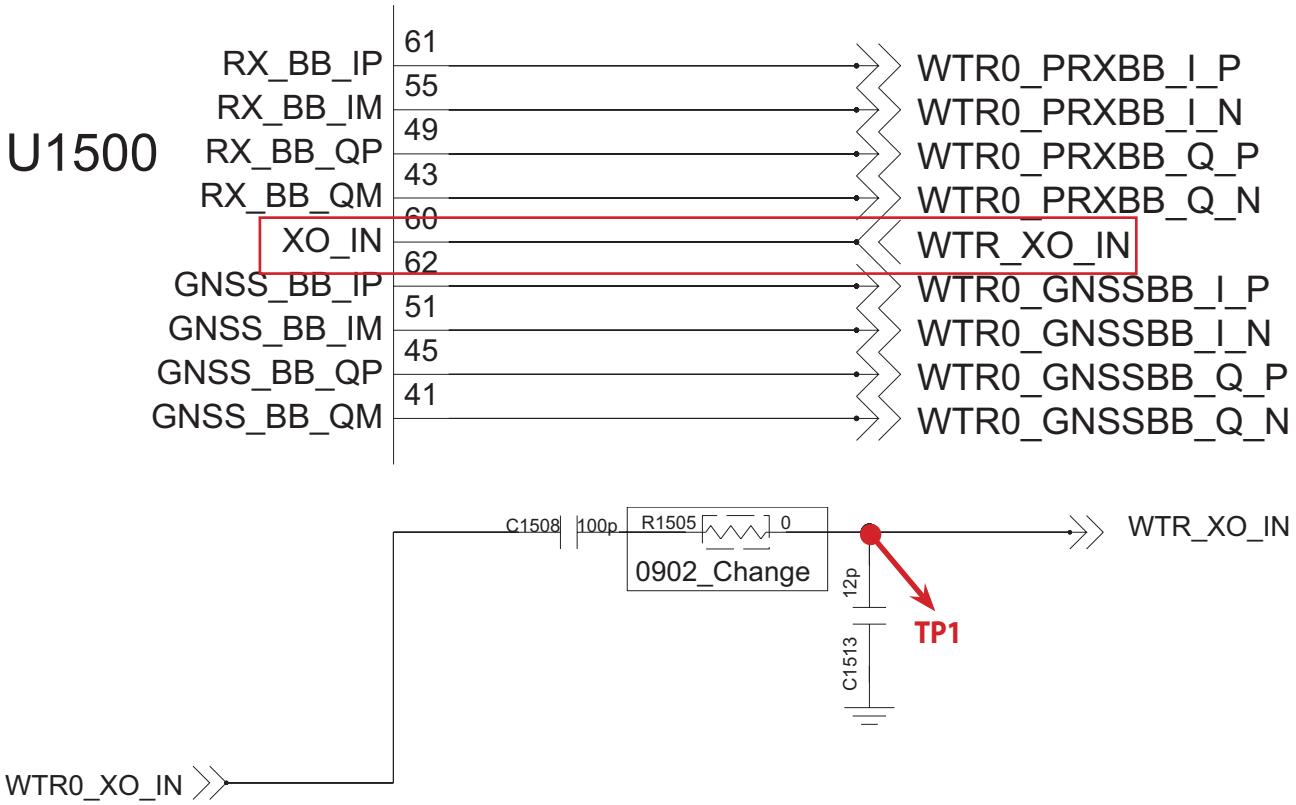

3.1.2.3 Checking RF signal path (TX Module)

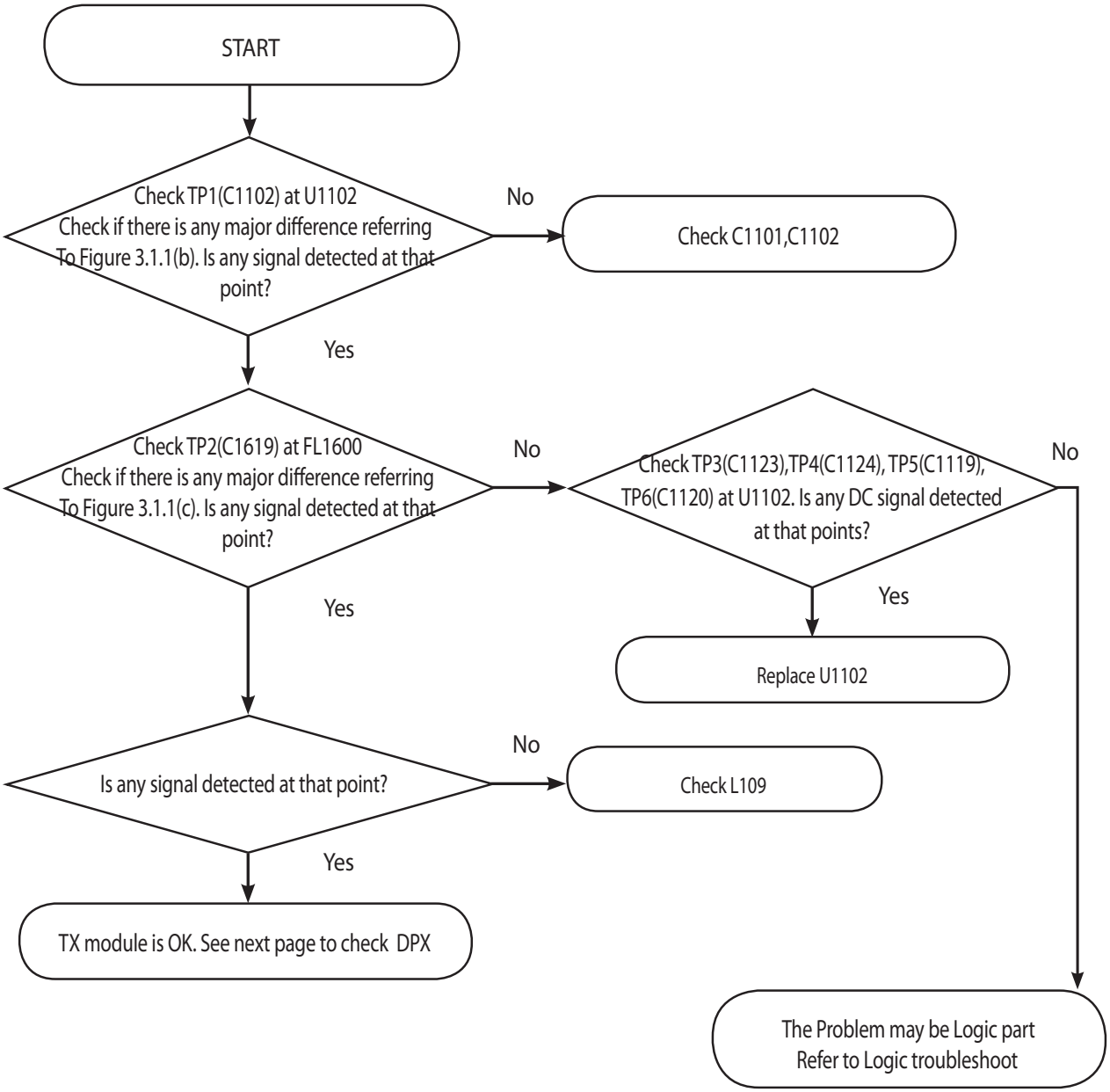

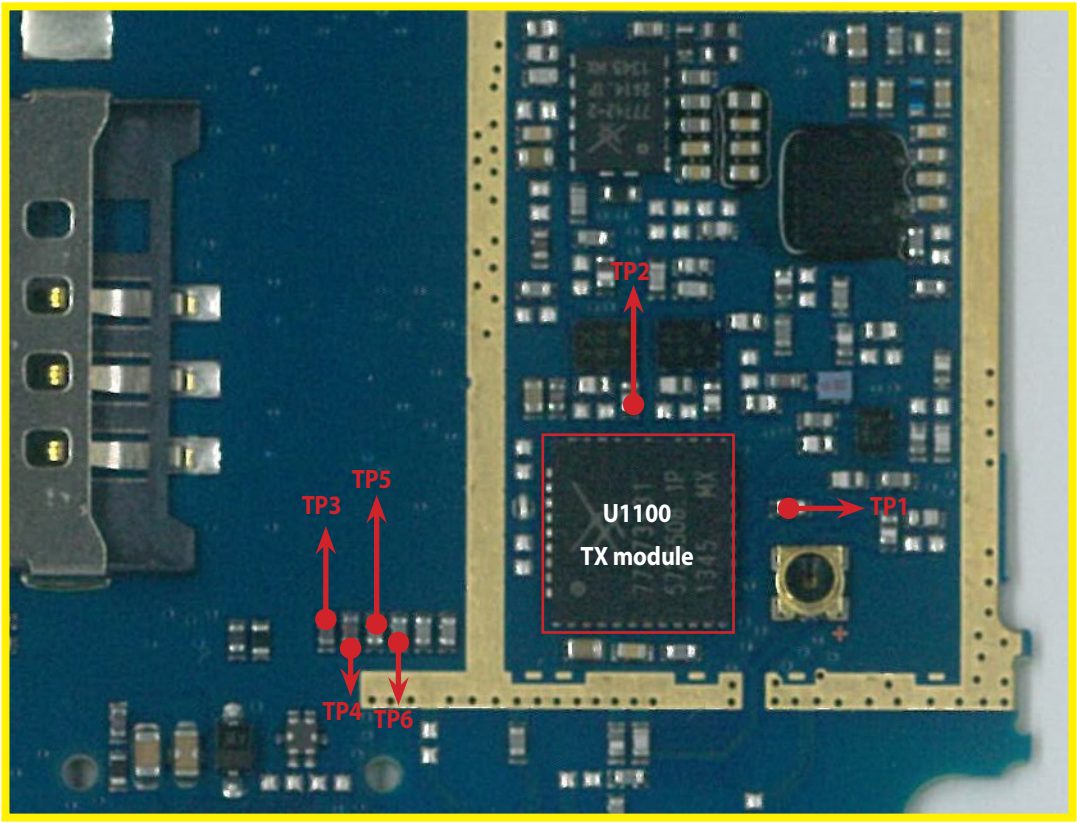

<Main Bot>

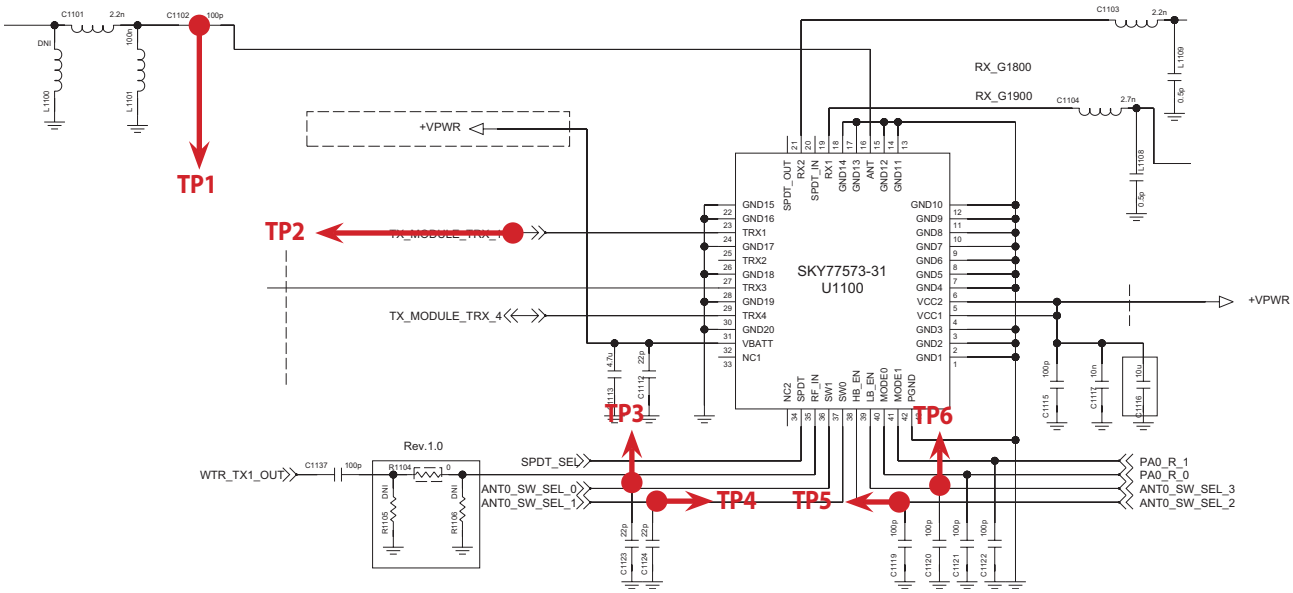

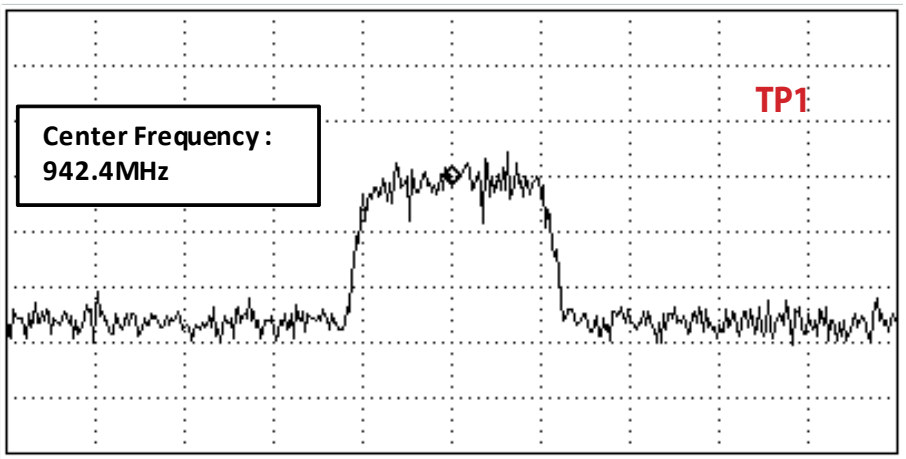

Figure 3.1.1 (b)

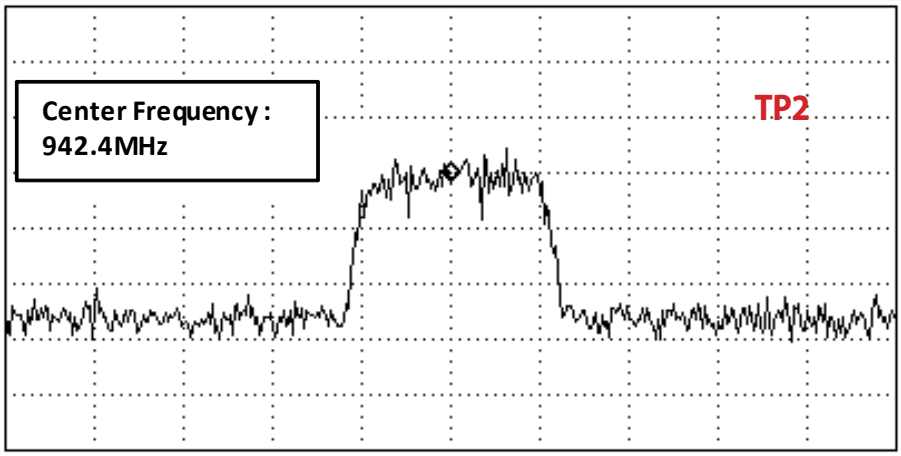

Figure 3.1.1 (c)

3.1.2.4 Checking RF signal path (Duplexer)

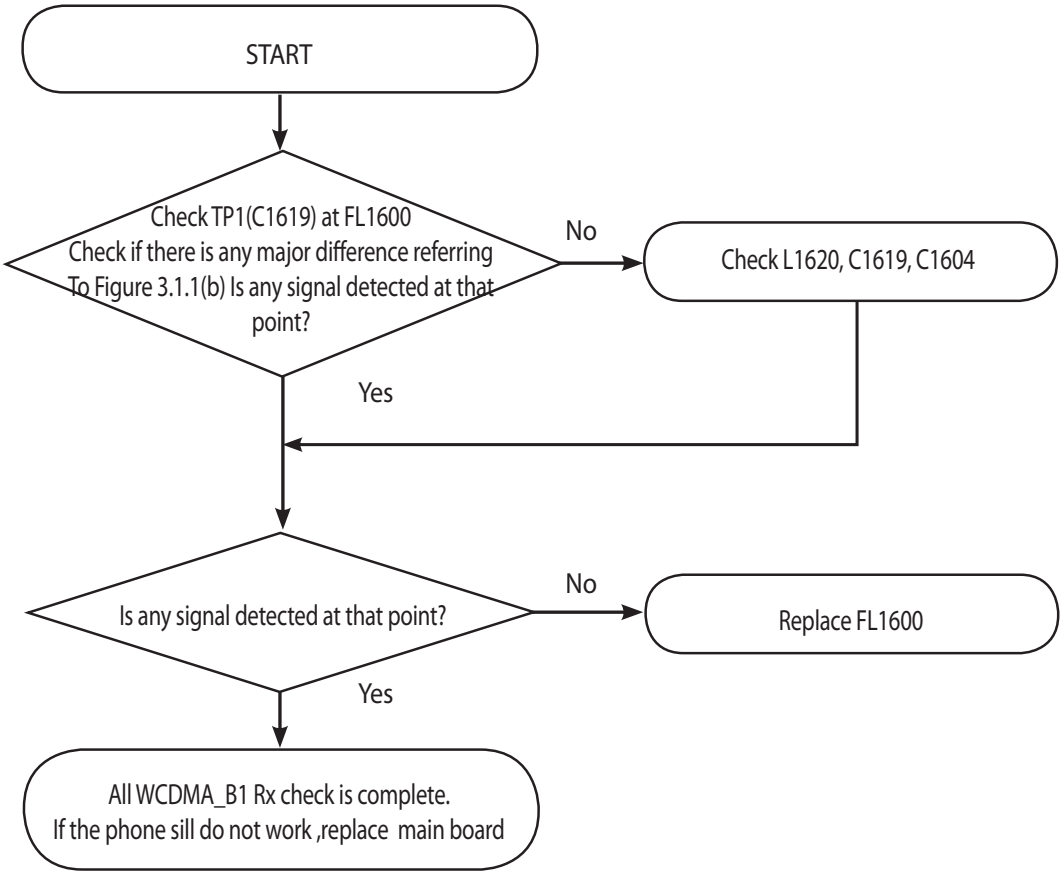

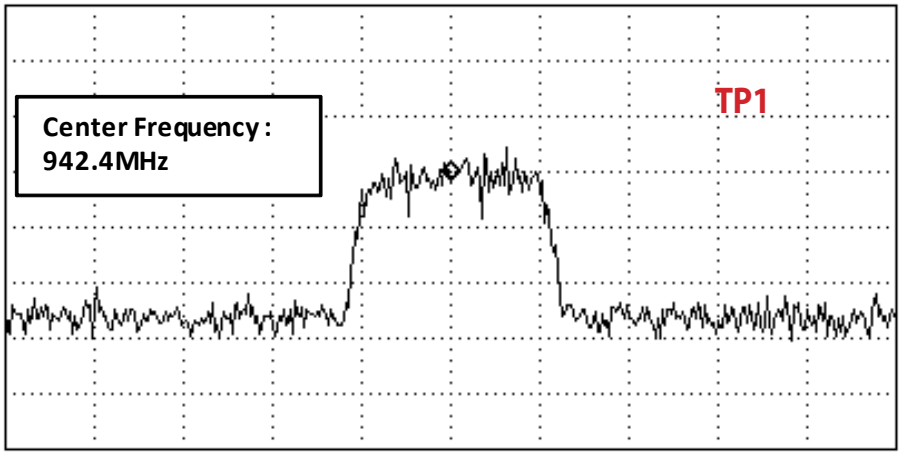

Figure 3.1.1(b)

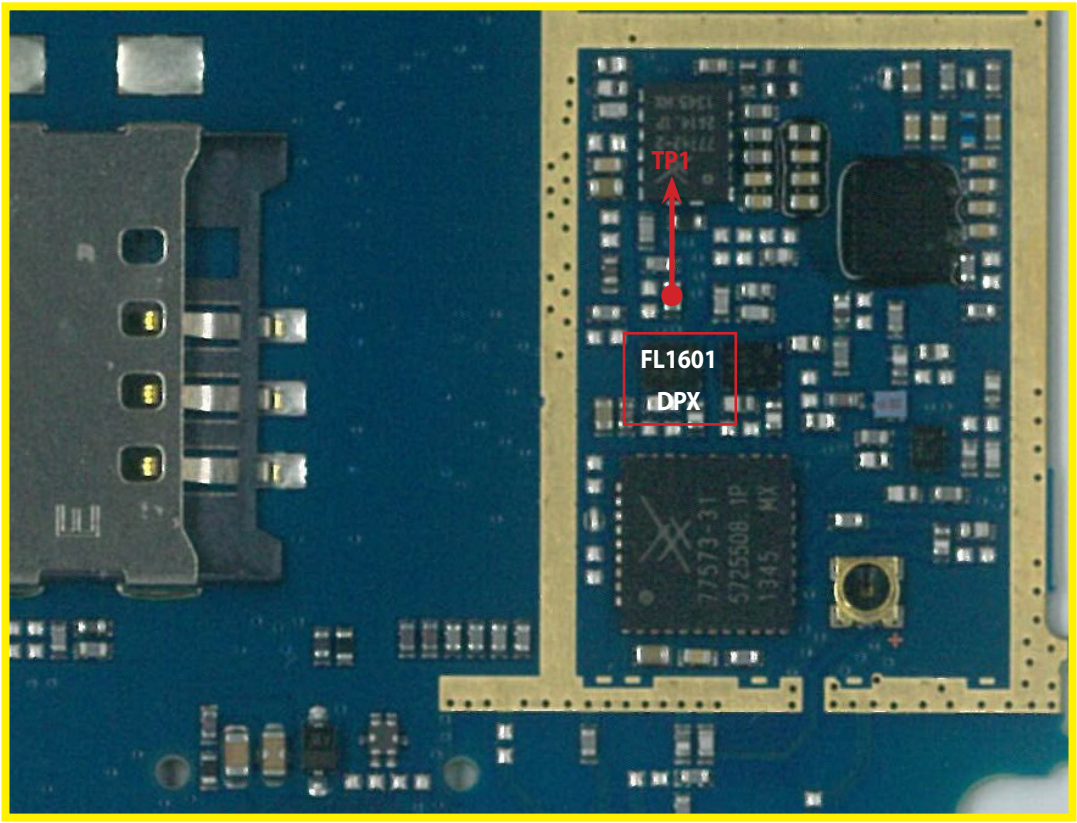

<Main Bot>

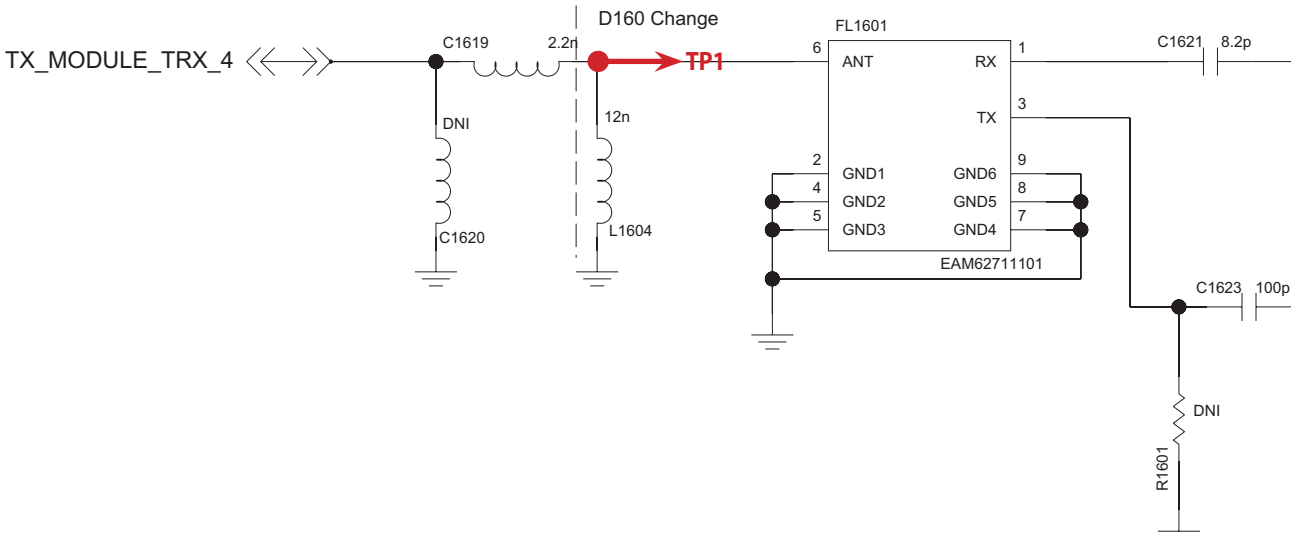

3.2 WCDMA Tx Part Trouble

3.2.1 WCDMA_B1 Tx

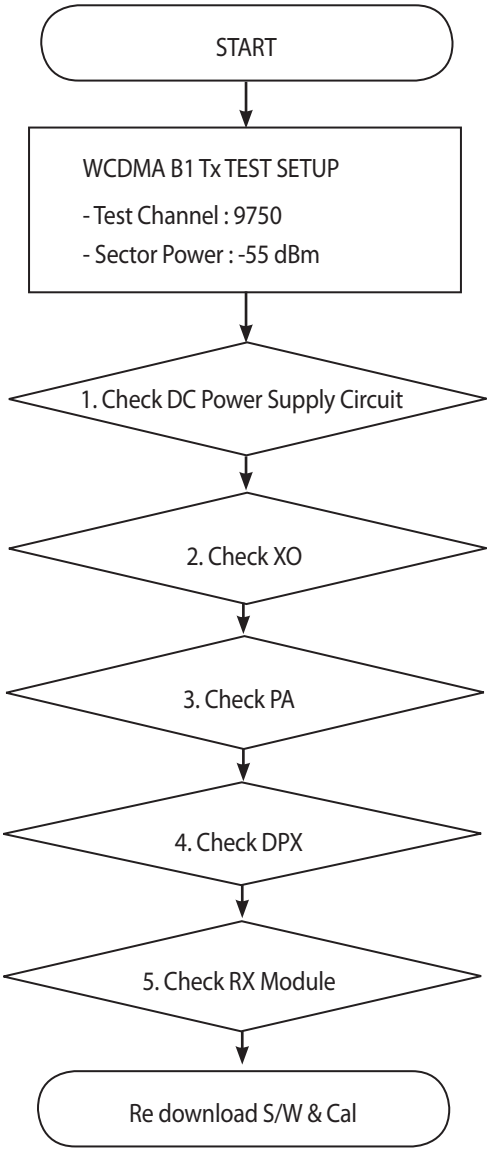

* There are no Test Points on the IQ Data Line. So It is impossible to check the IQ Data Wave form.

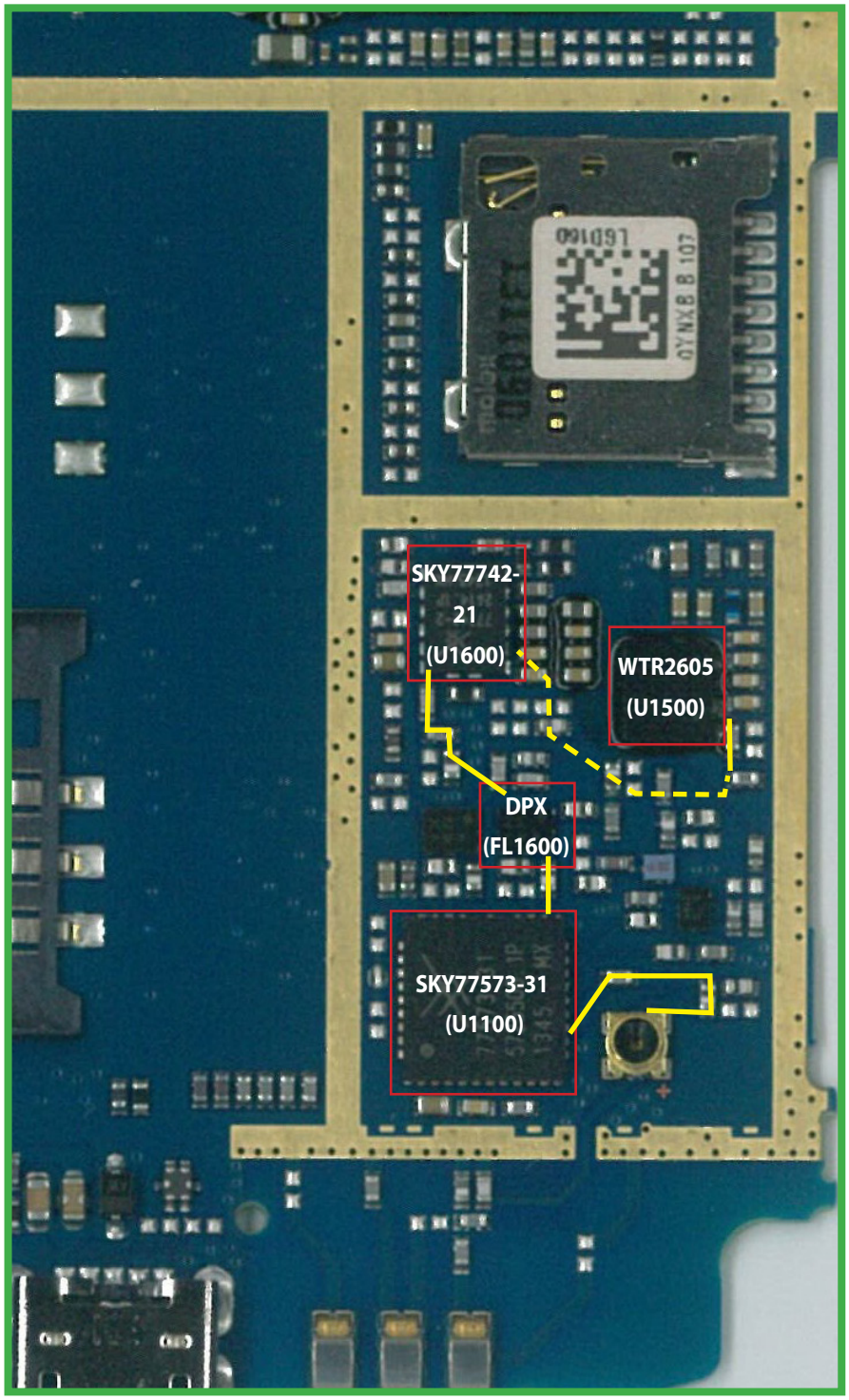

3.2.1.1 Checking DC Power supply circuit

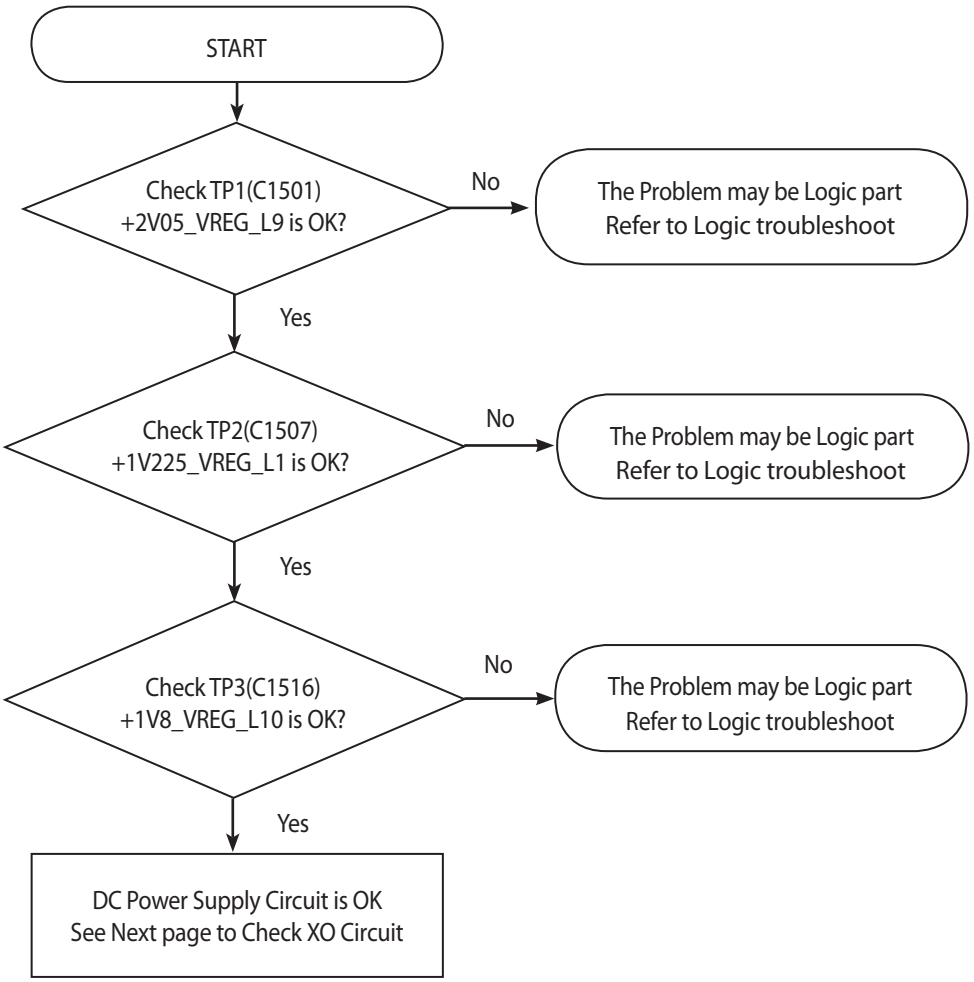

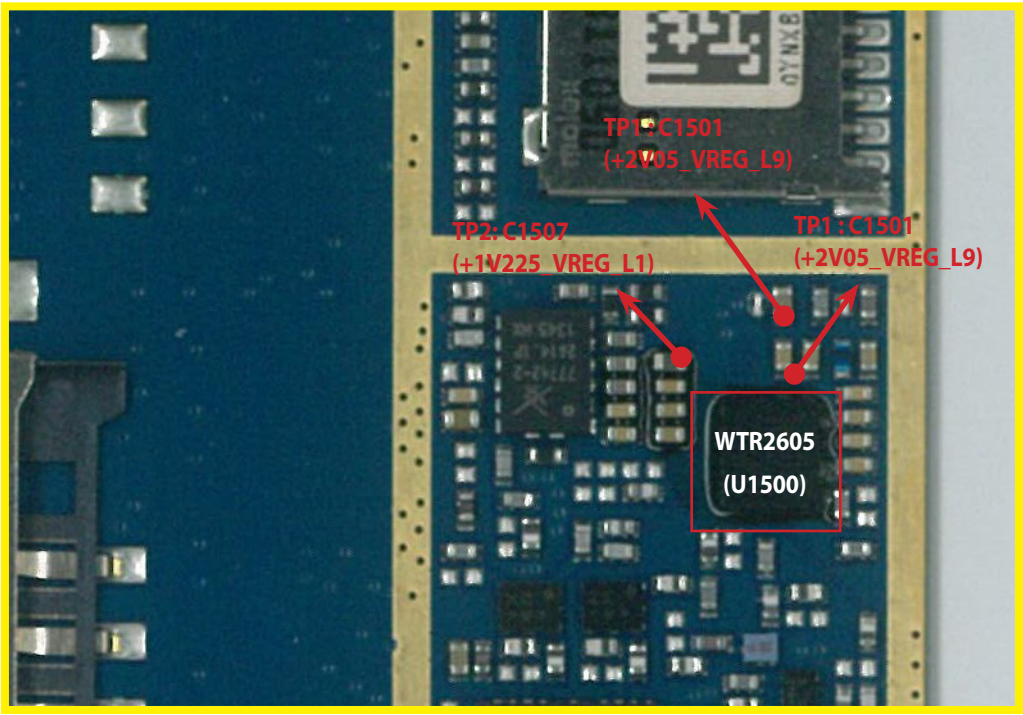

<Main Bot>

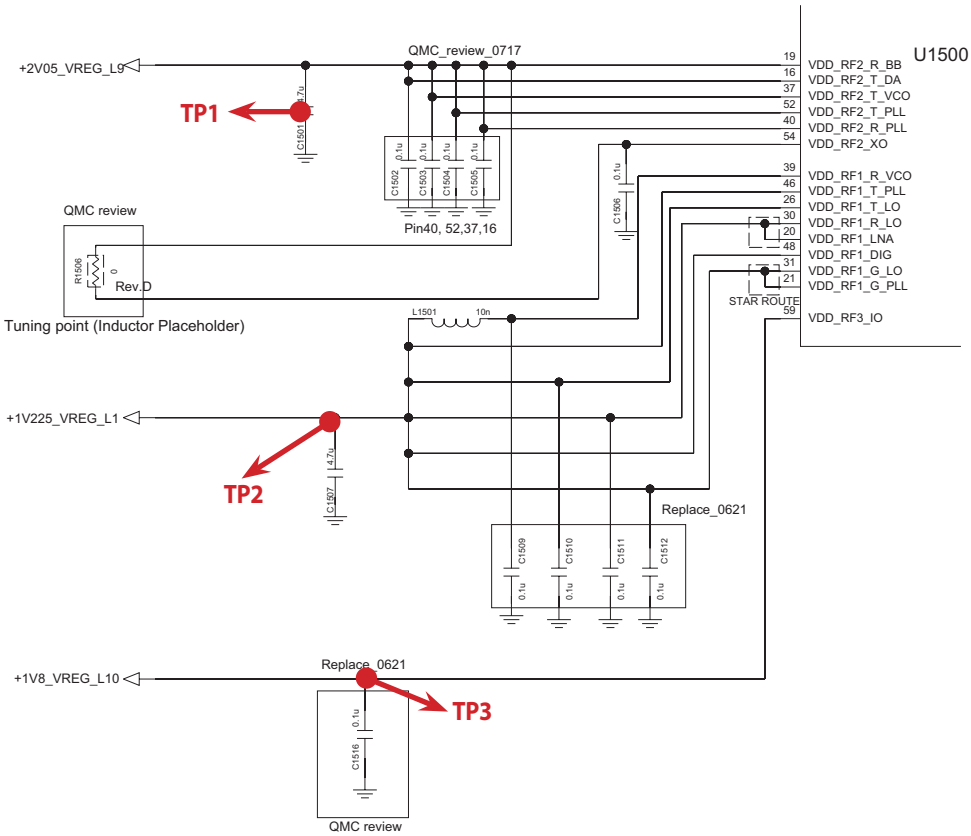

3.2.1.2 Checking XO circuit

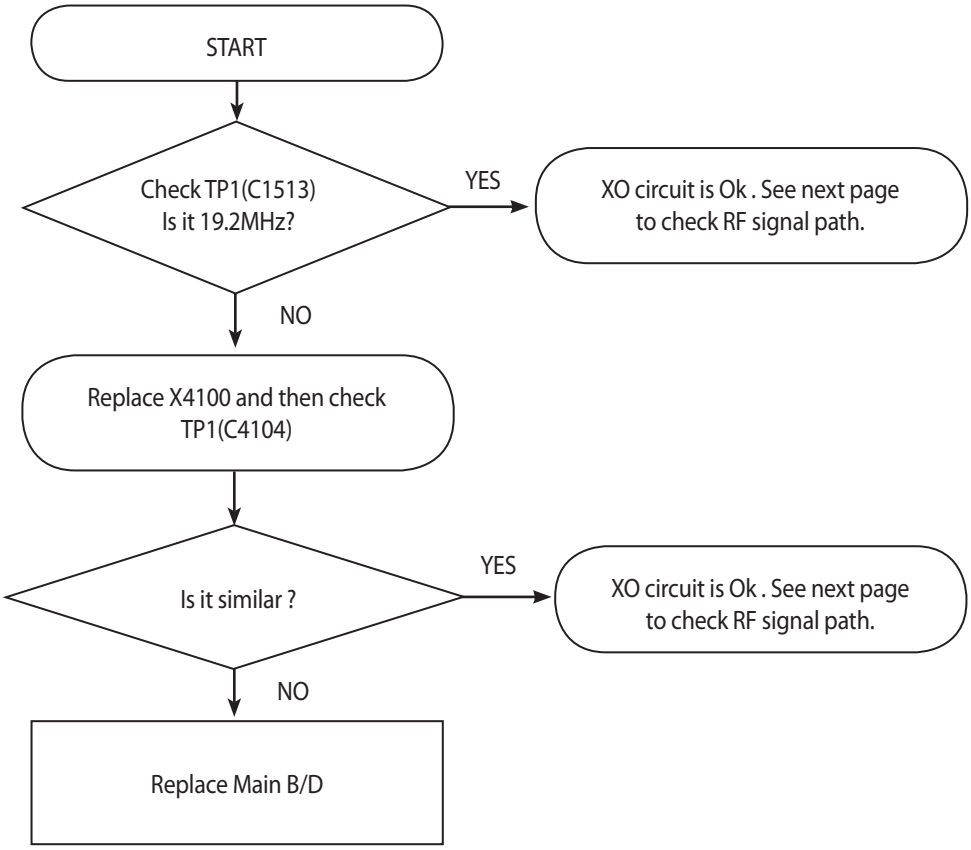

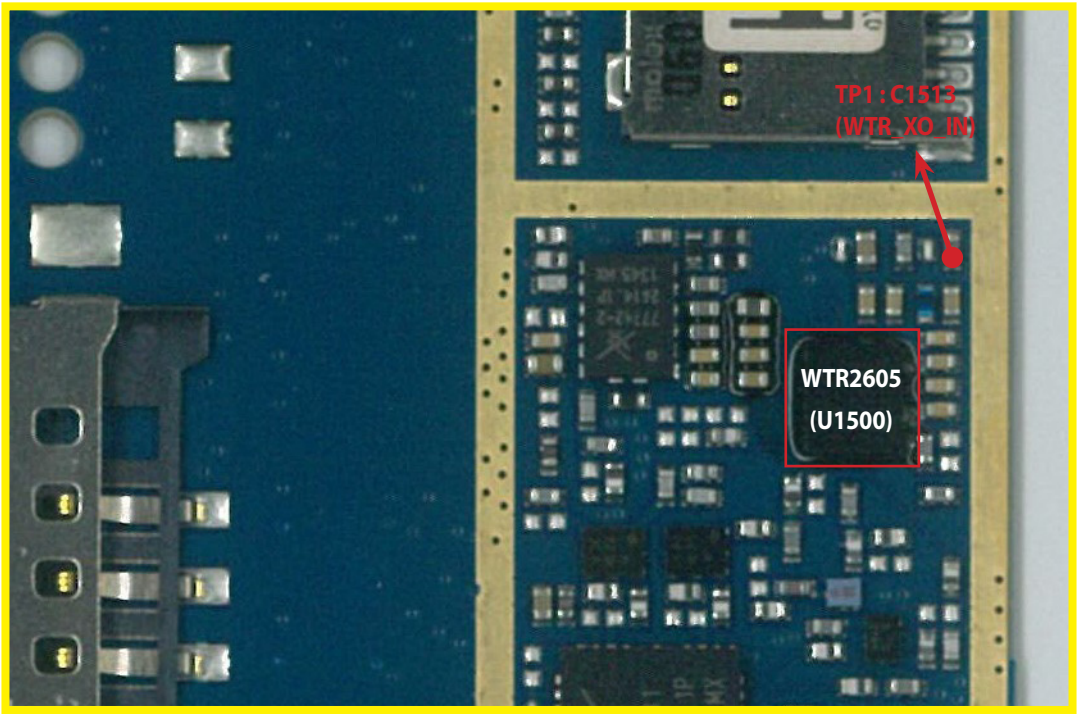

<Main Bot>

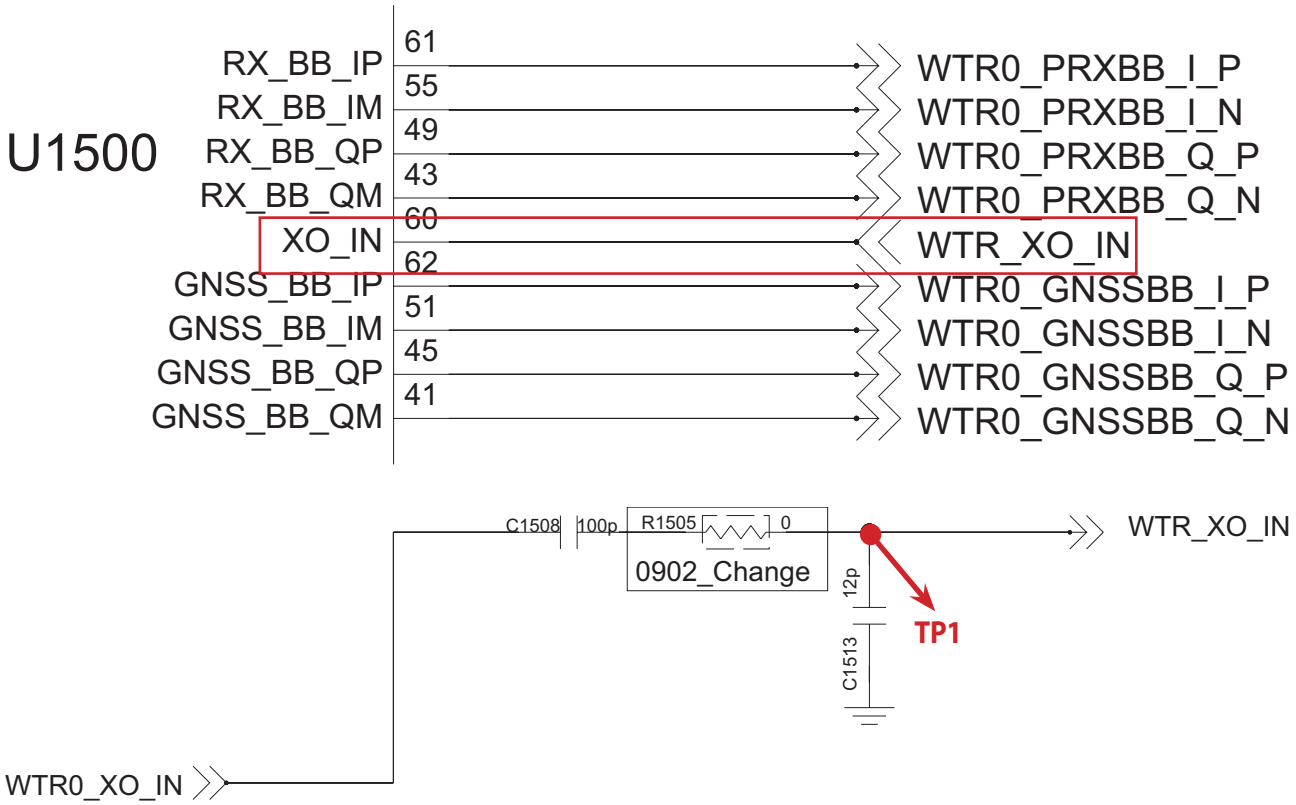

3.2.1.3 Checking B1 TX PA

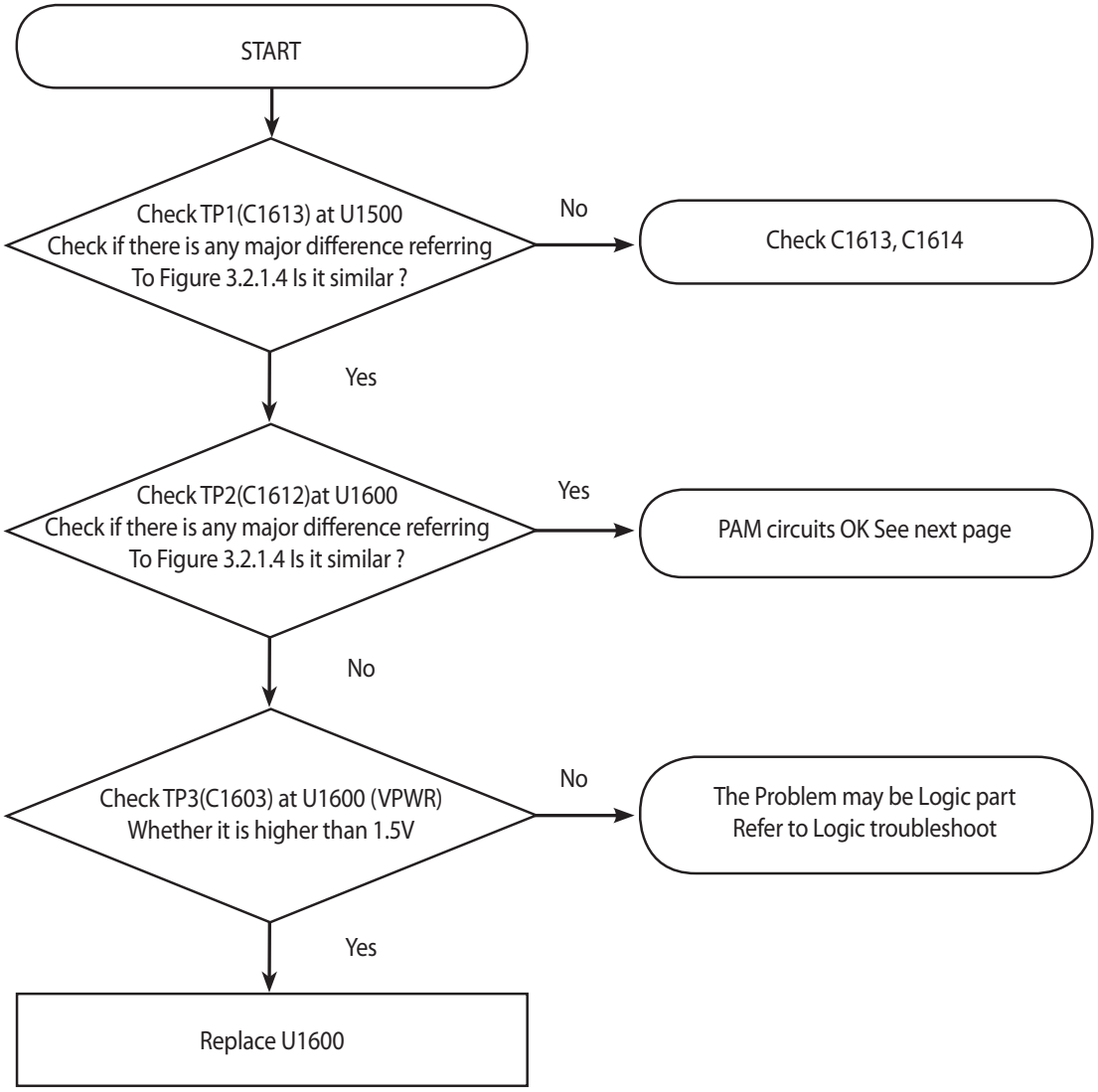

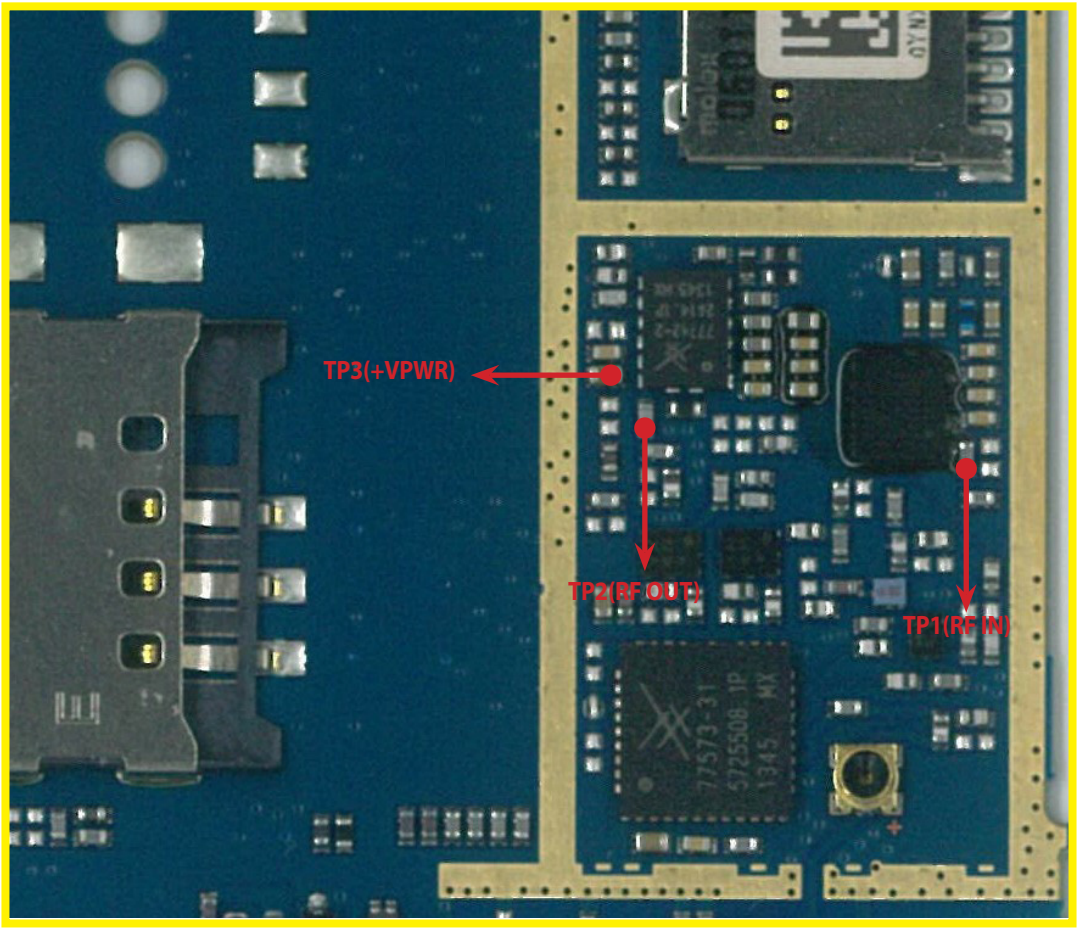

<Main Bot>

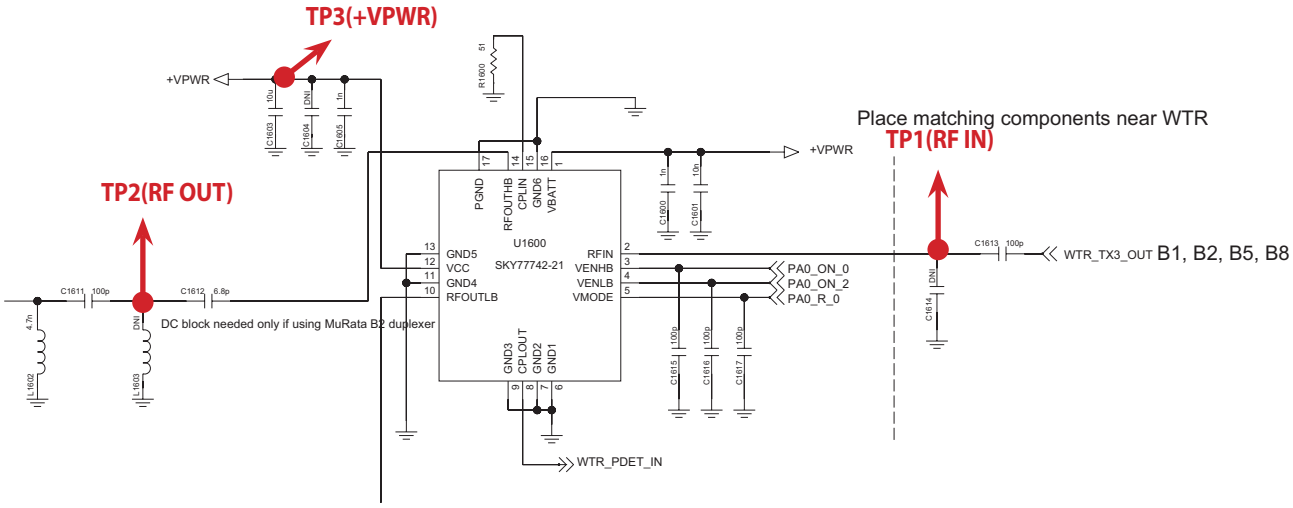

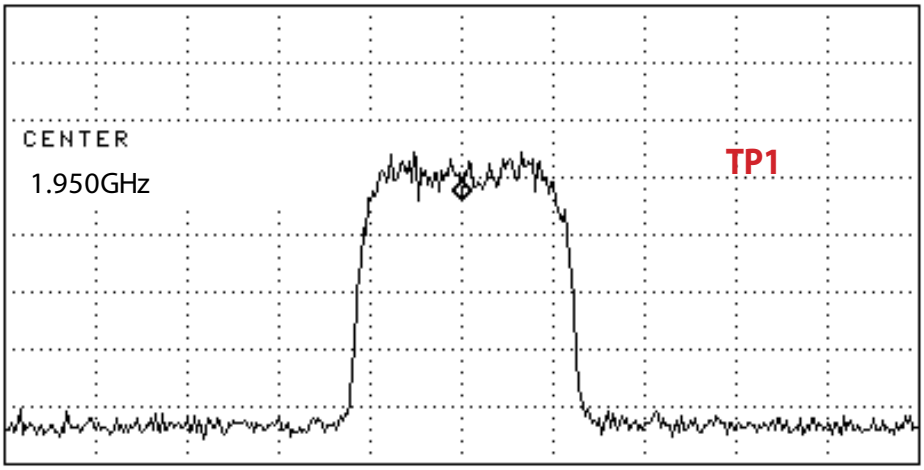

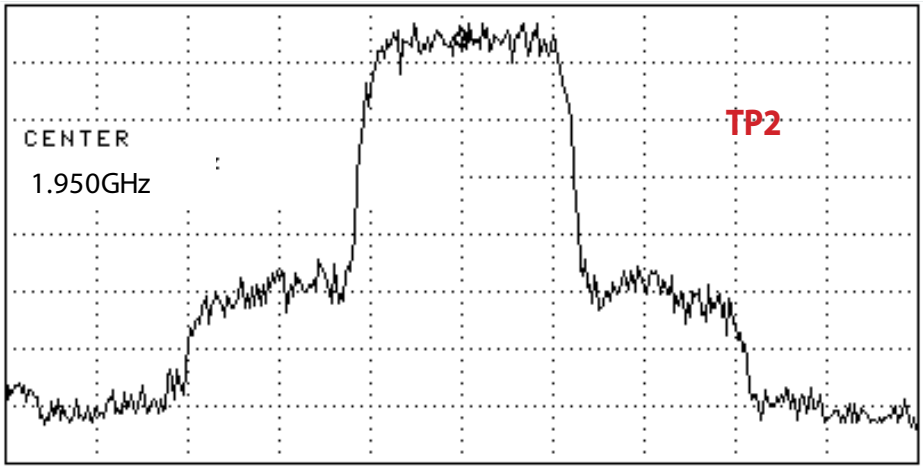

Figure 3.2.1.4

3.2.1.4 Checking RF signal path (DPX)

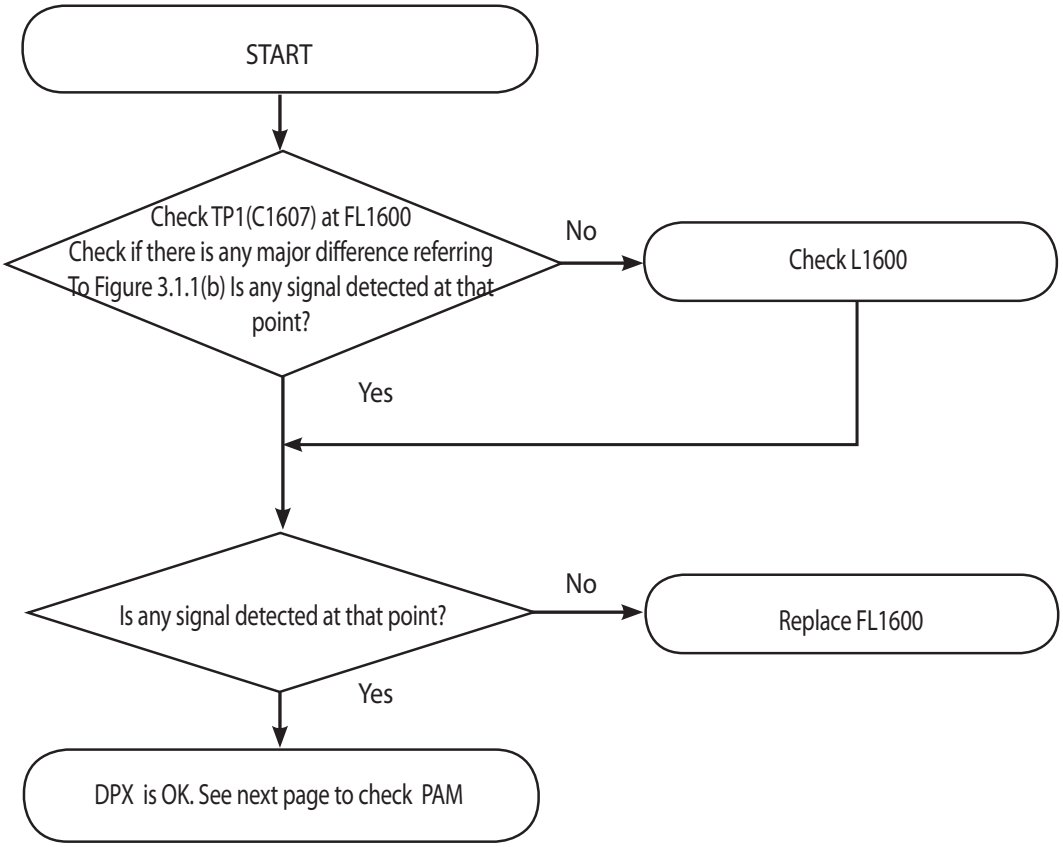

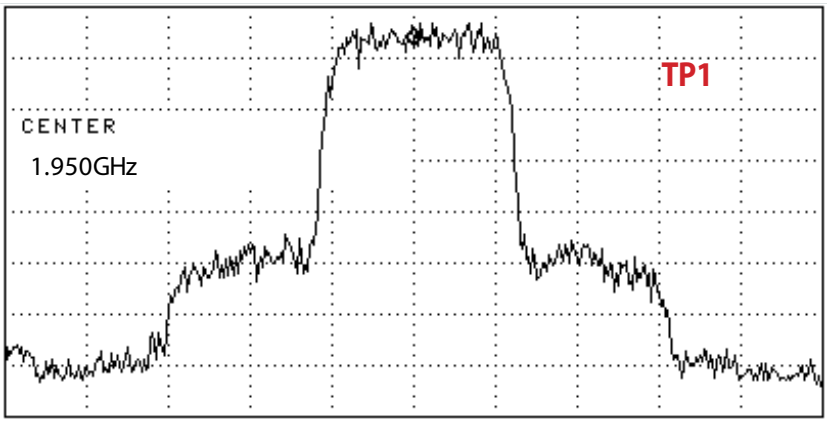

Figure 3.1.1(b)

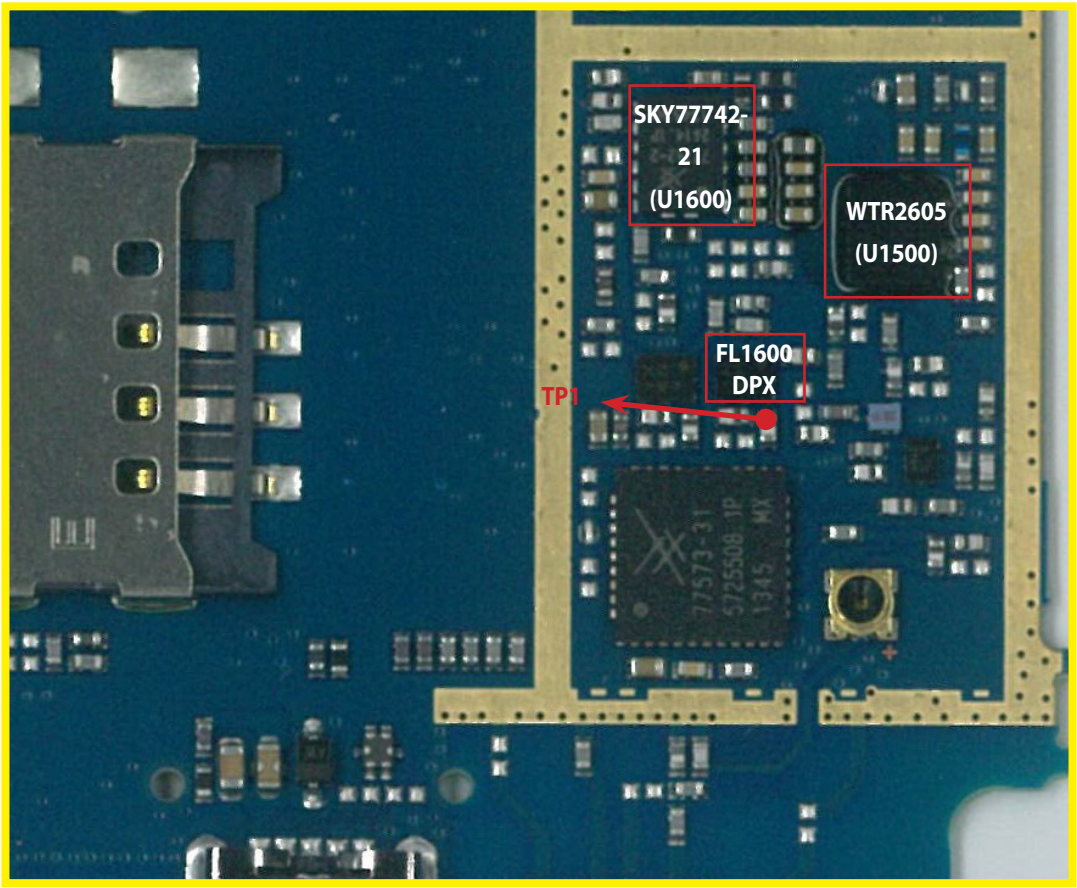

<Main Bot>

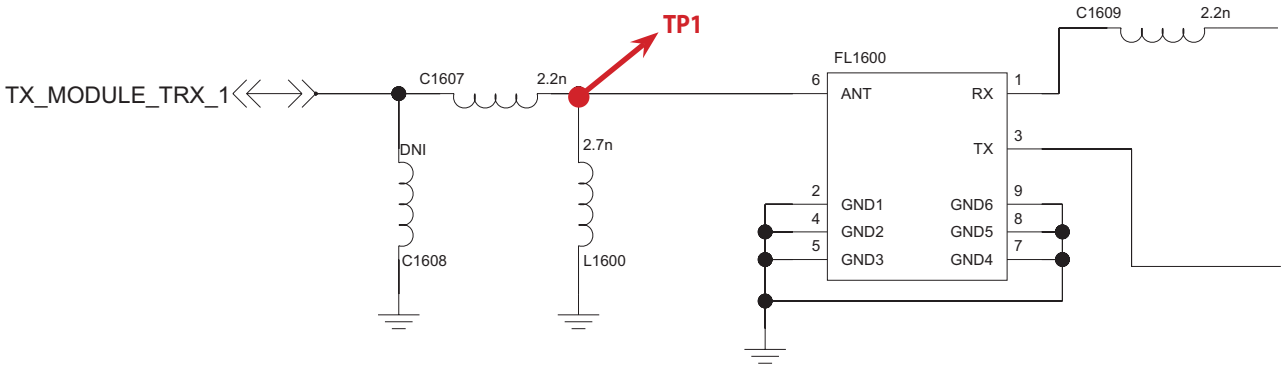

3.2.1.5 Checking RF signal path (TX Module)

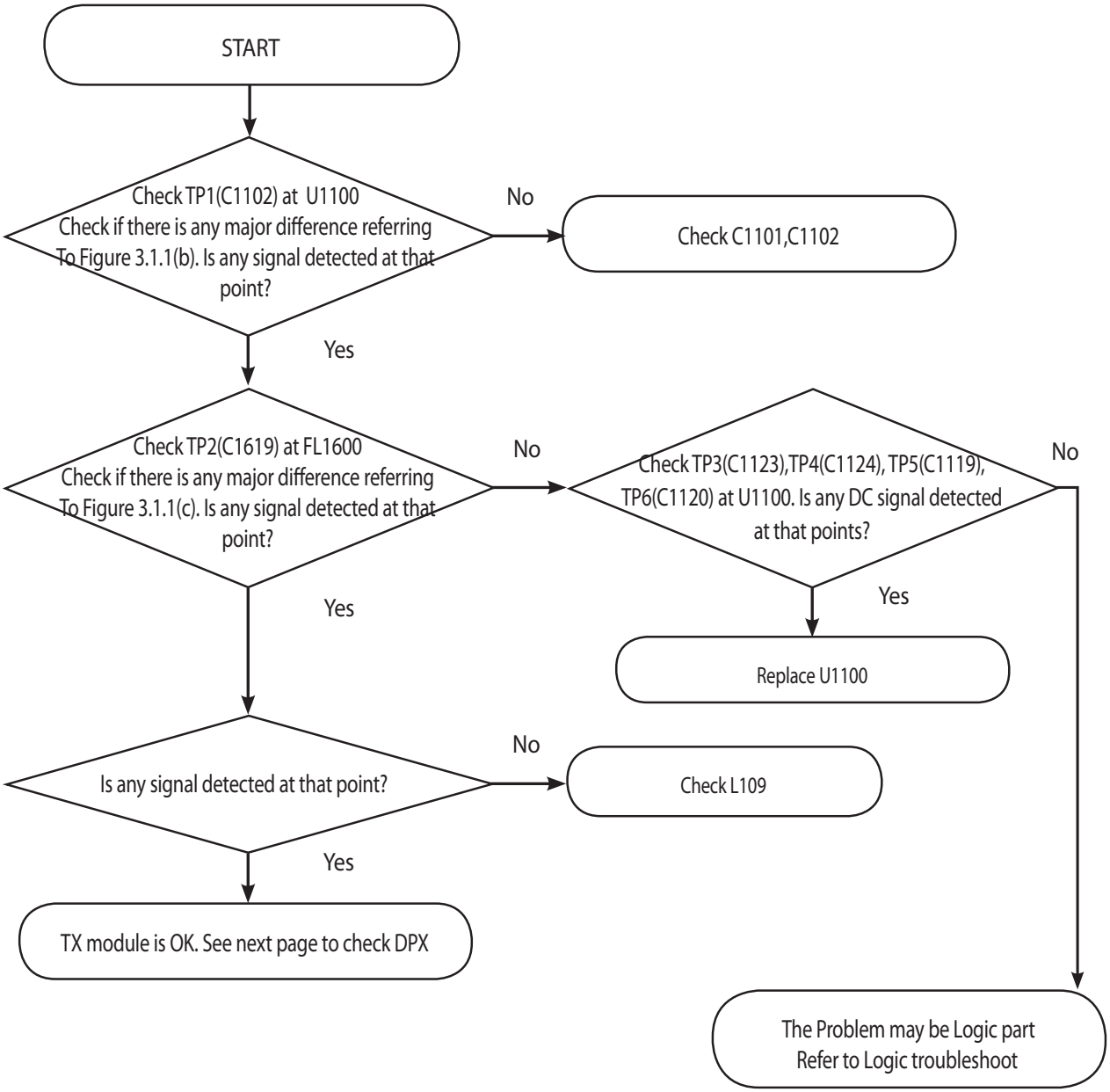

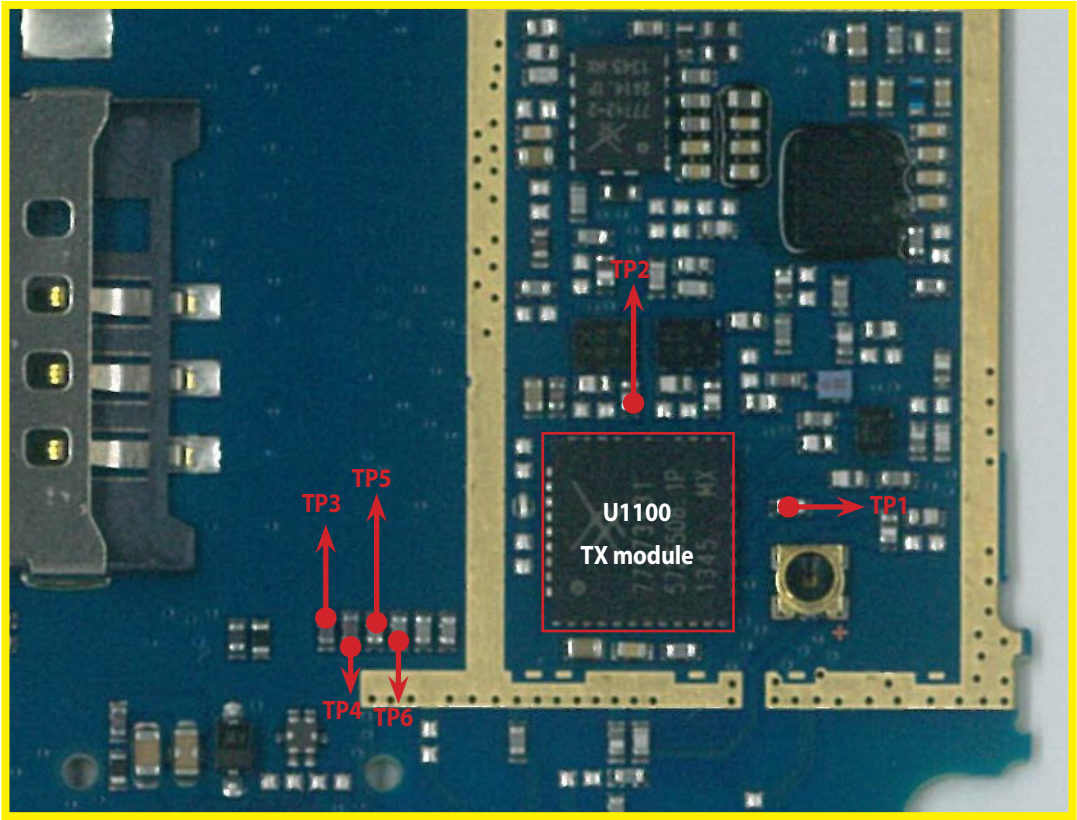

<Main Bot>

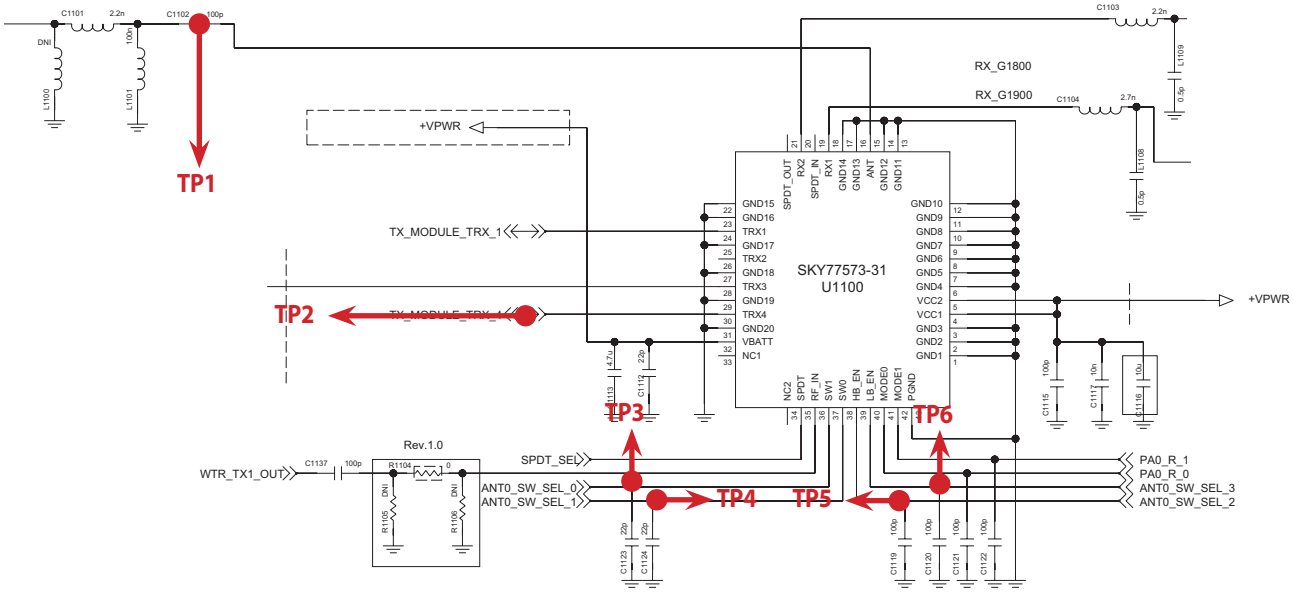

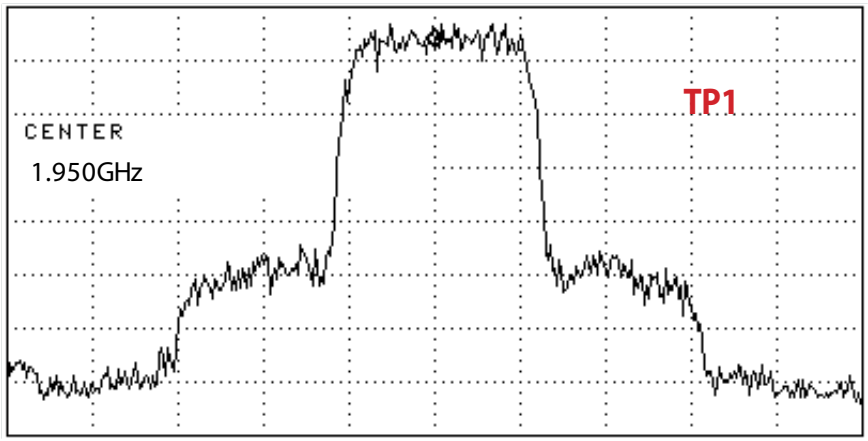

Figure 3.1.1(b)

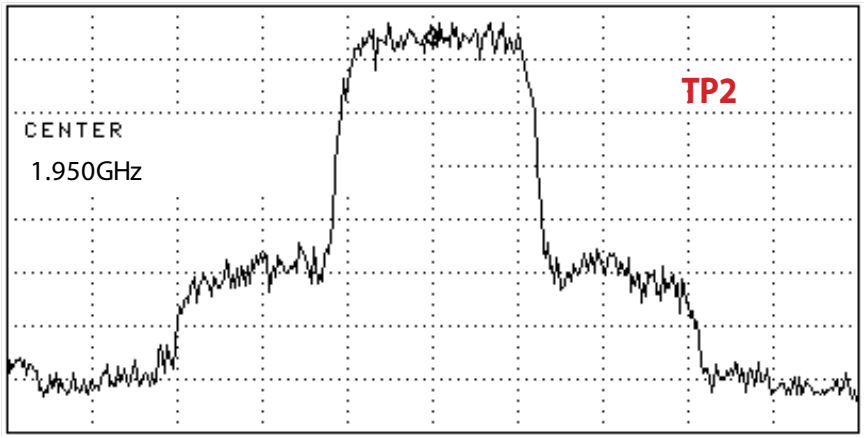

Figure 3.1.1(c)

3.2.2 WCDMA_B8 Tx

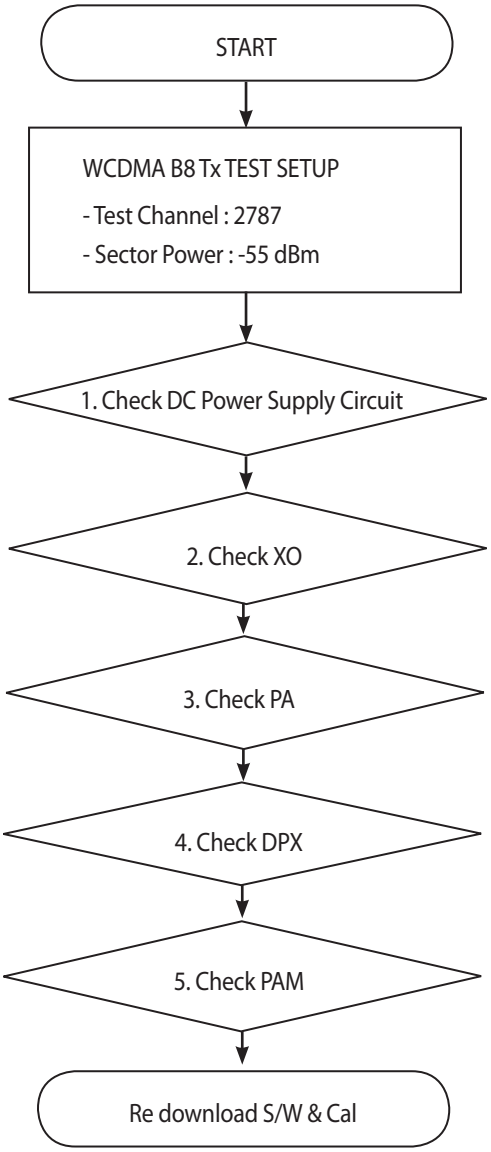

* There are no Test Points on the IQ Data Line. So It is impossible to check the IQ Data Wave form.

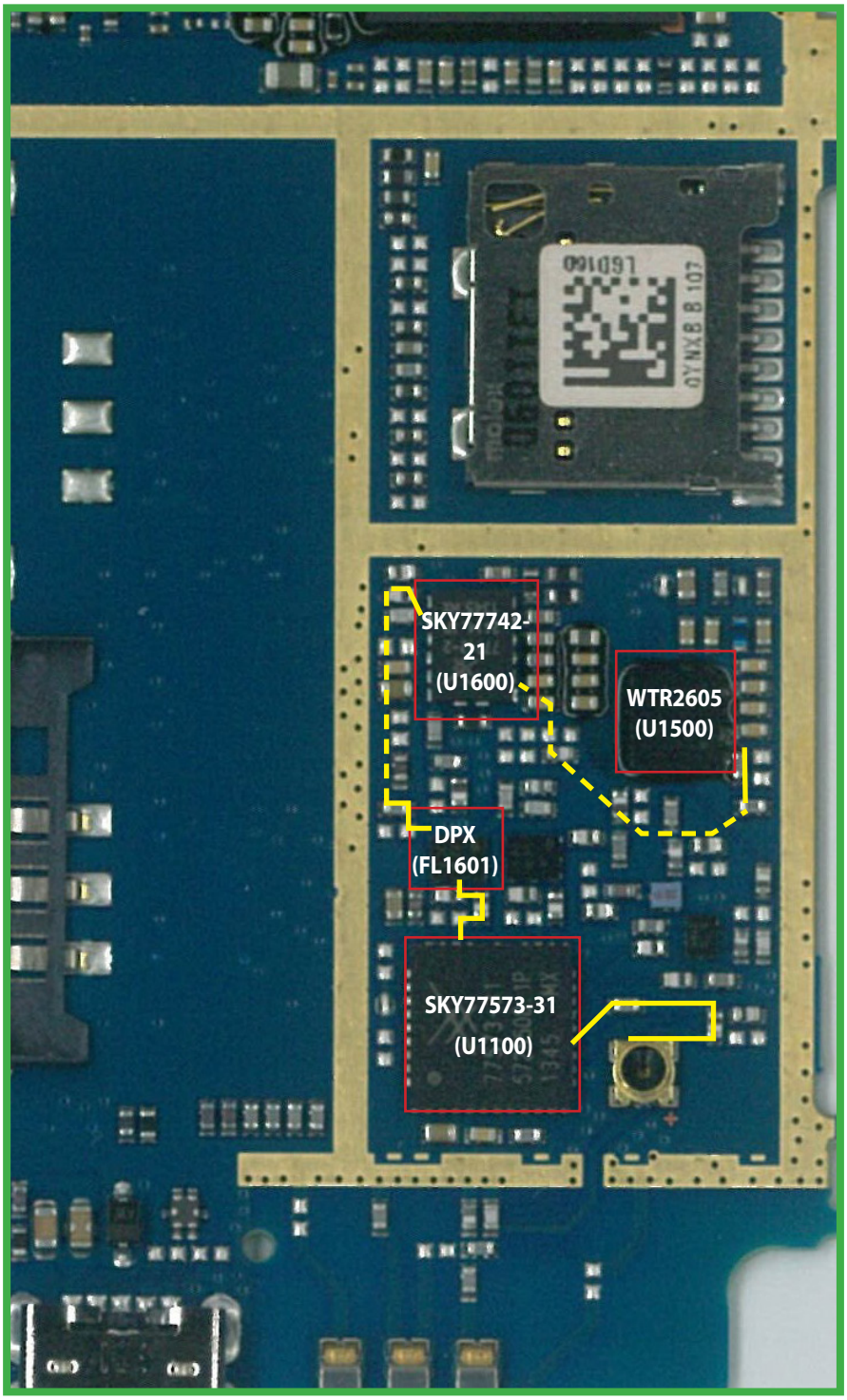

3.2.2.1 Checking DC Power supply circuit

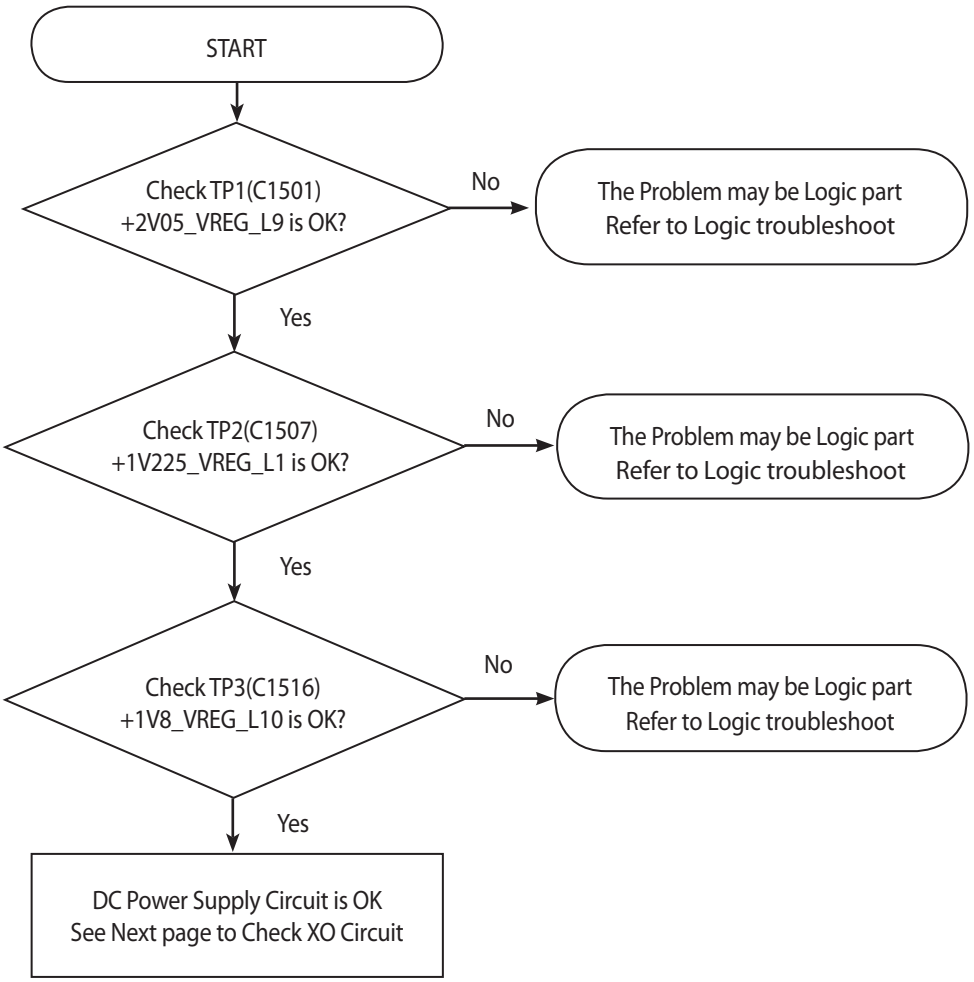

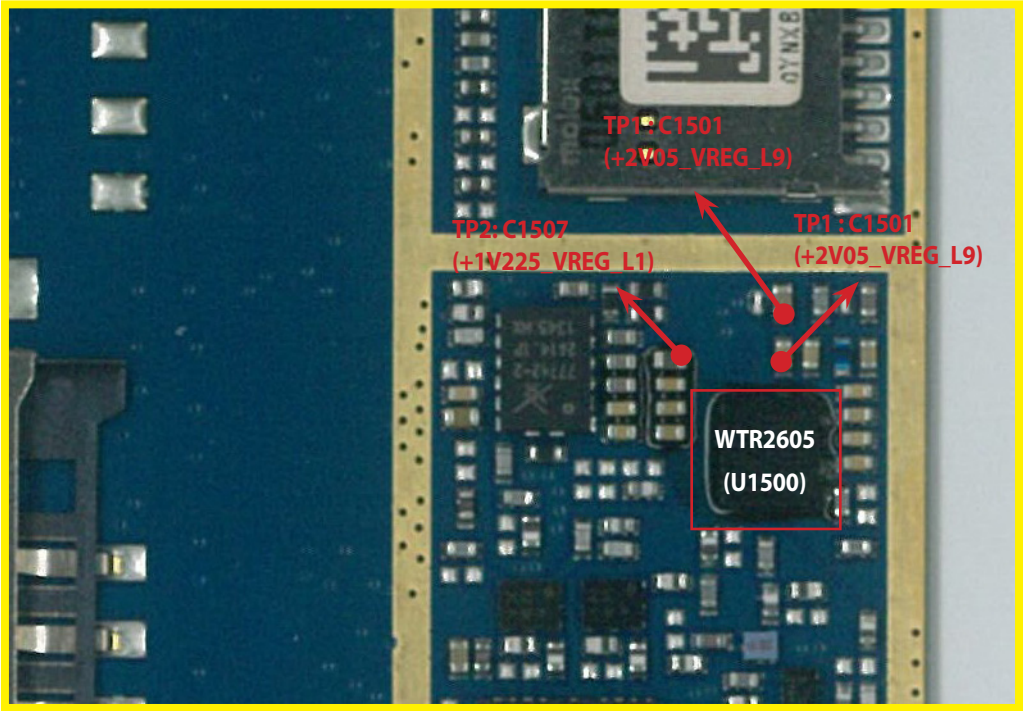

<Main Bot>

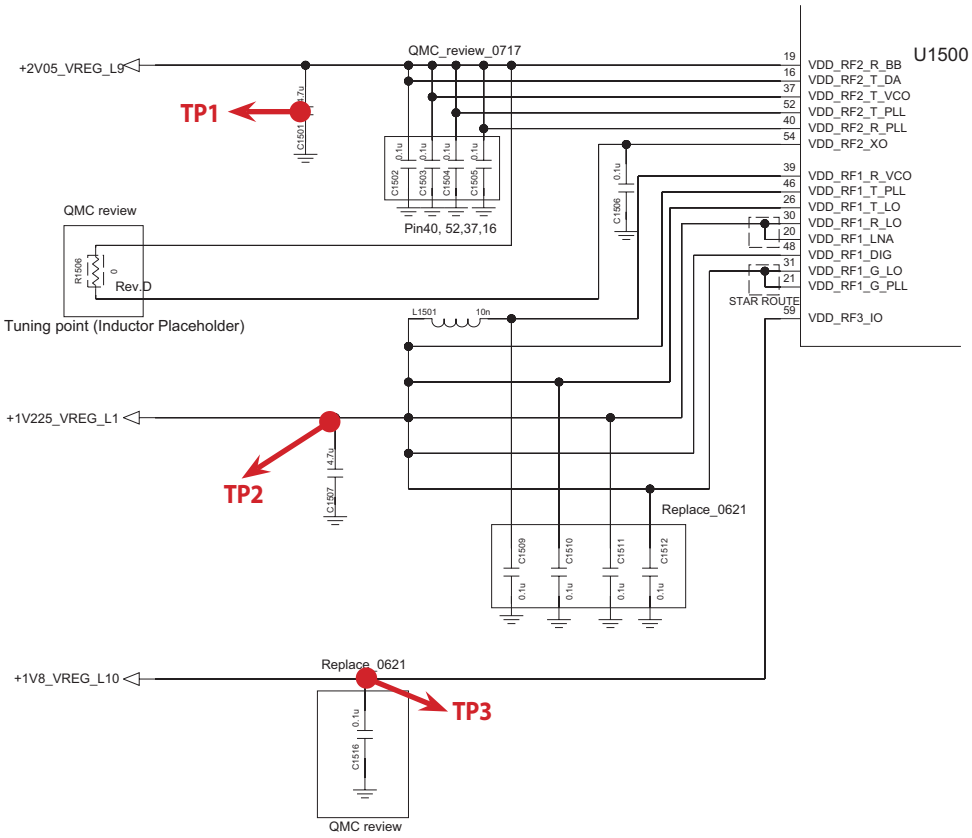

3.2.2.2 Checking XO circuit

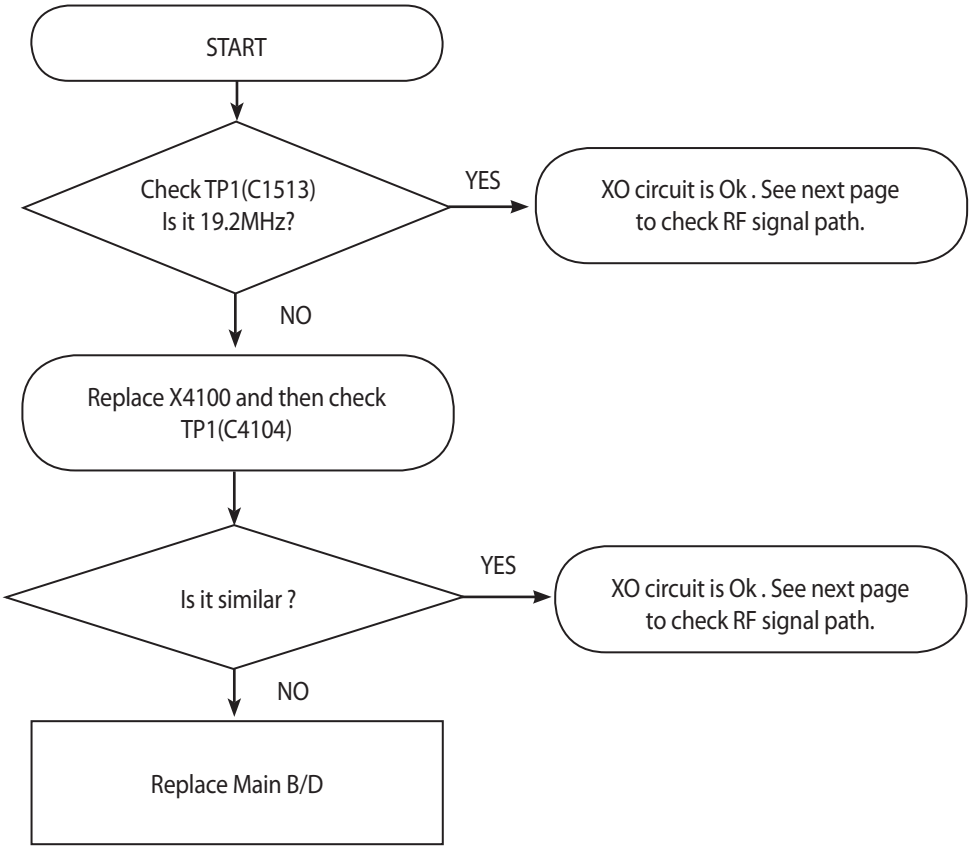

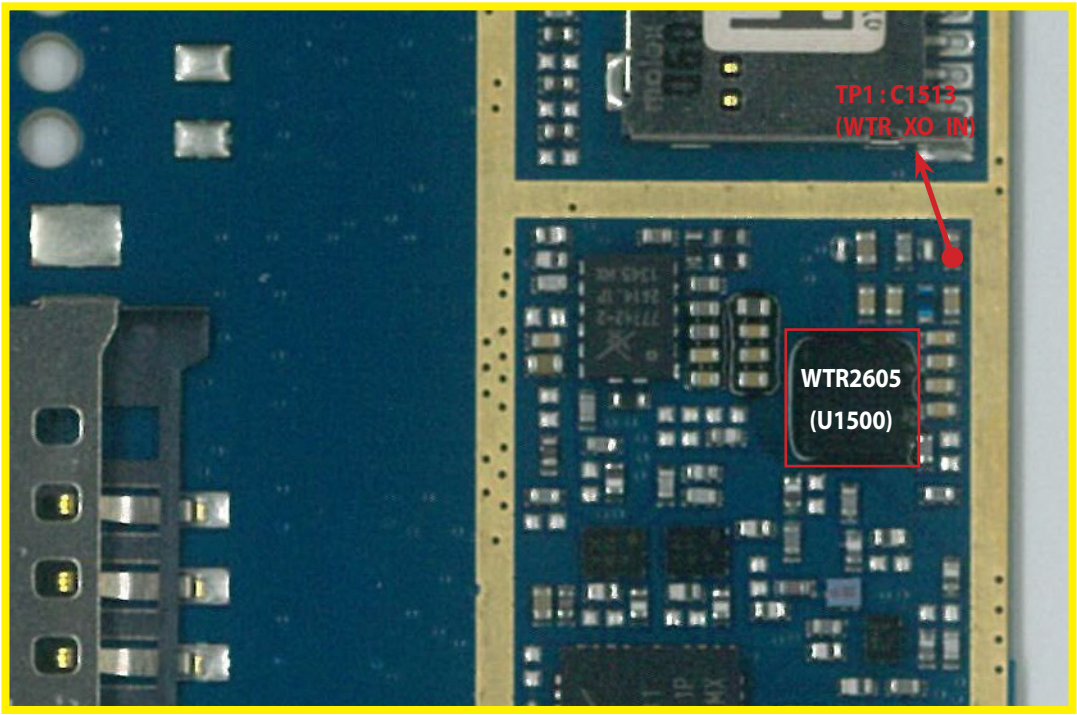

<Main Bot>

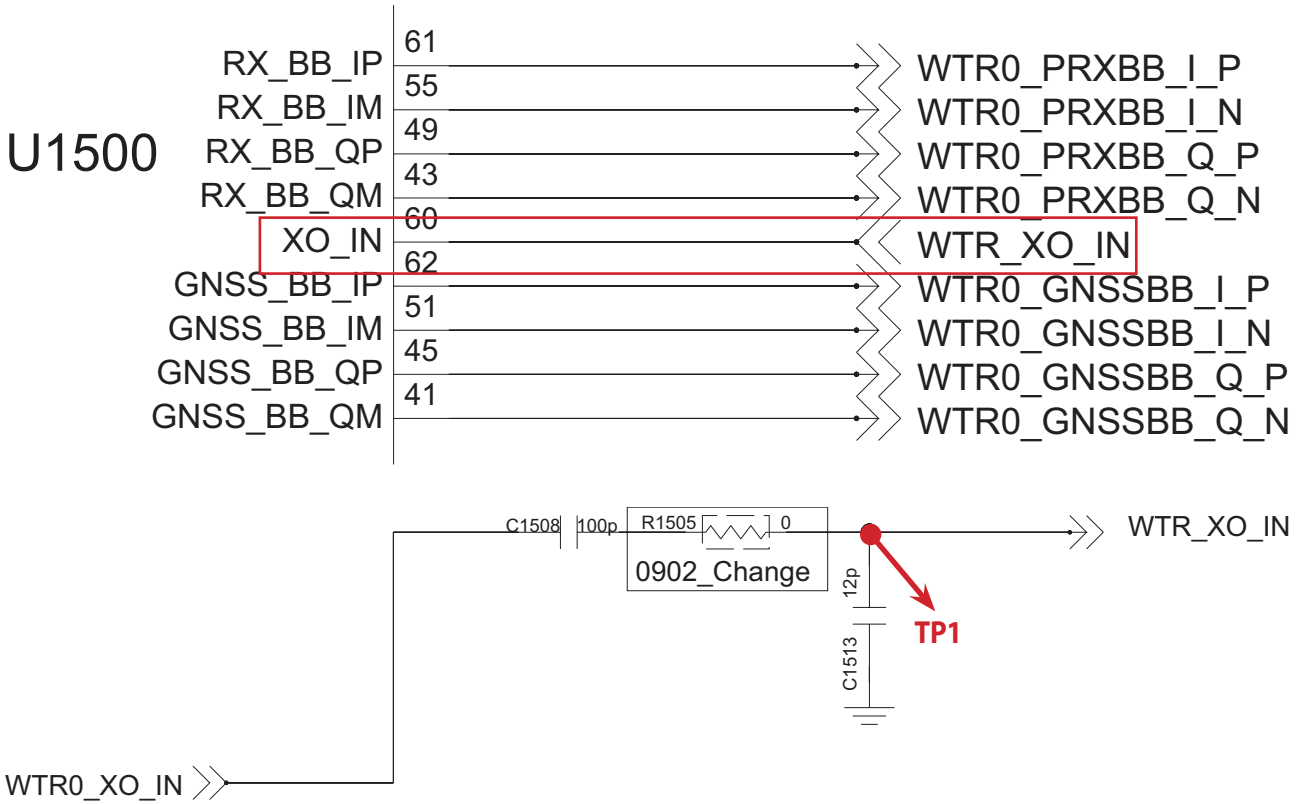

3.2.2.3 Checking B8 TX PA

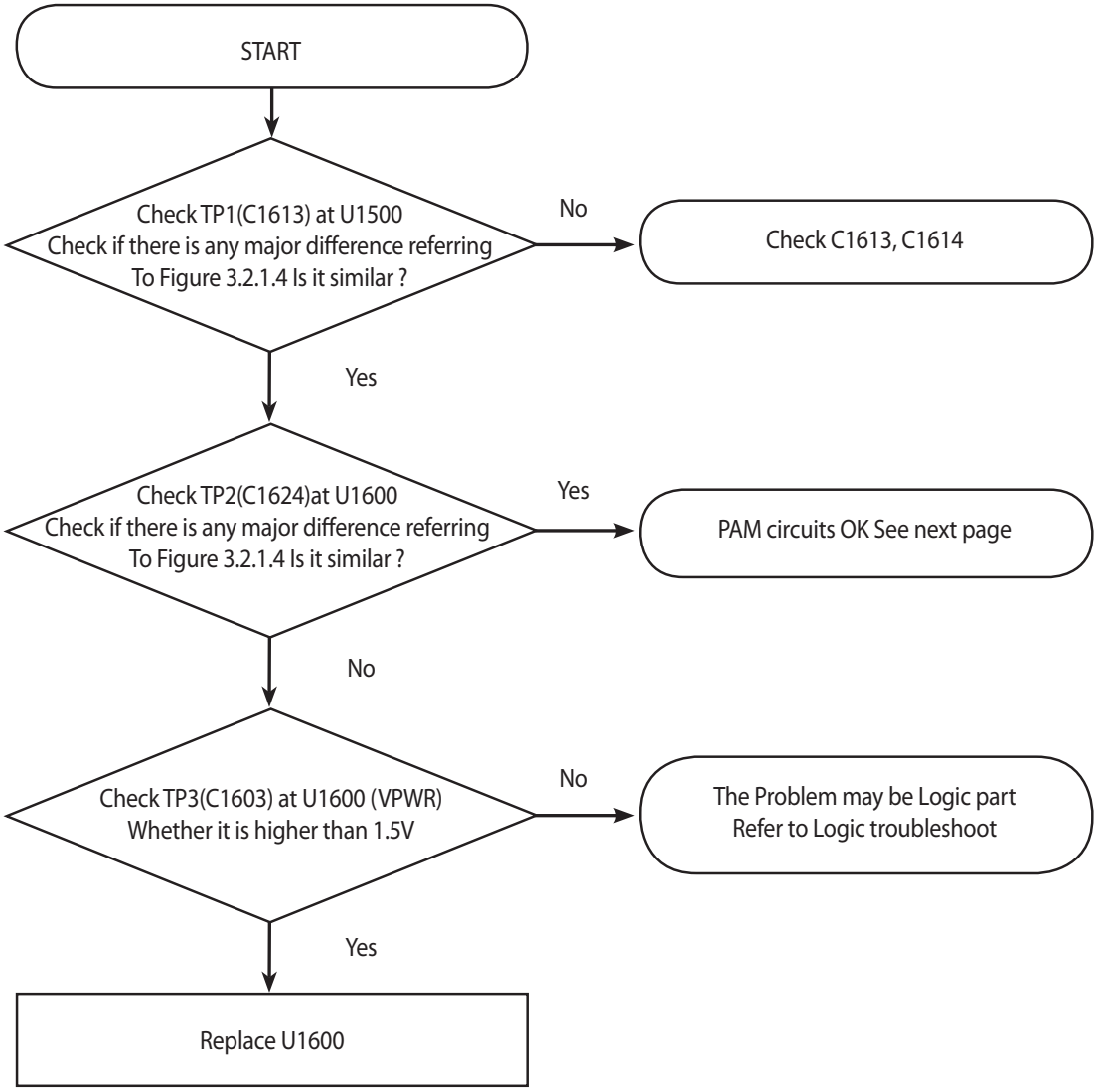

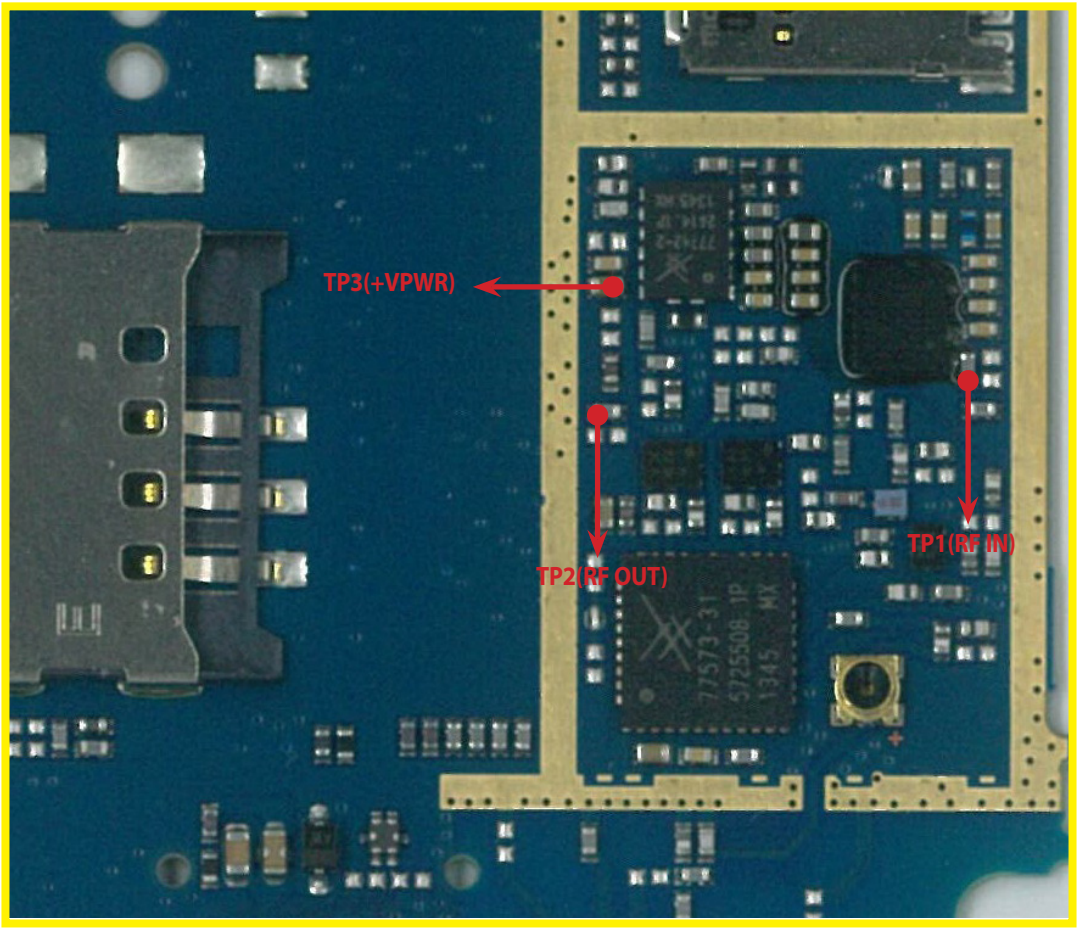

<Main Bot>

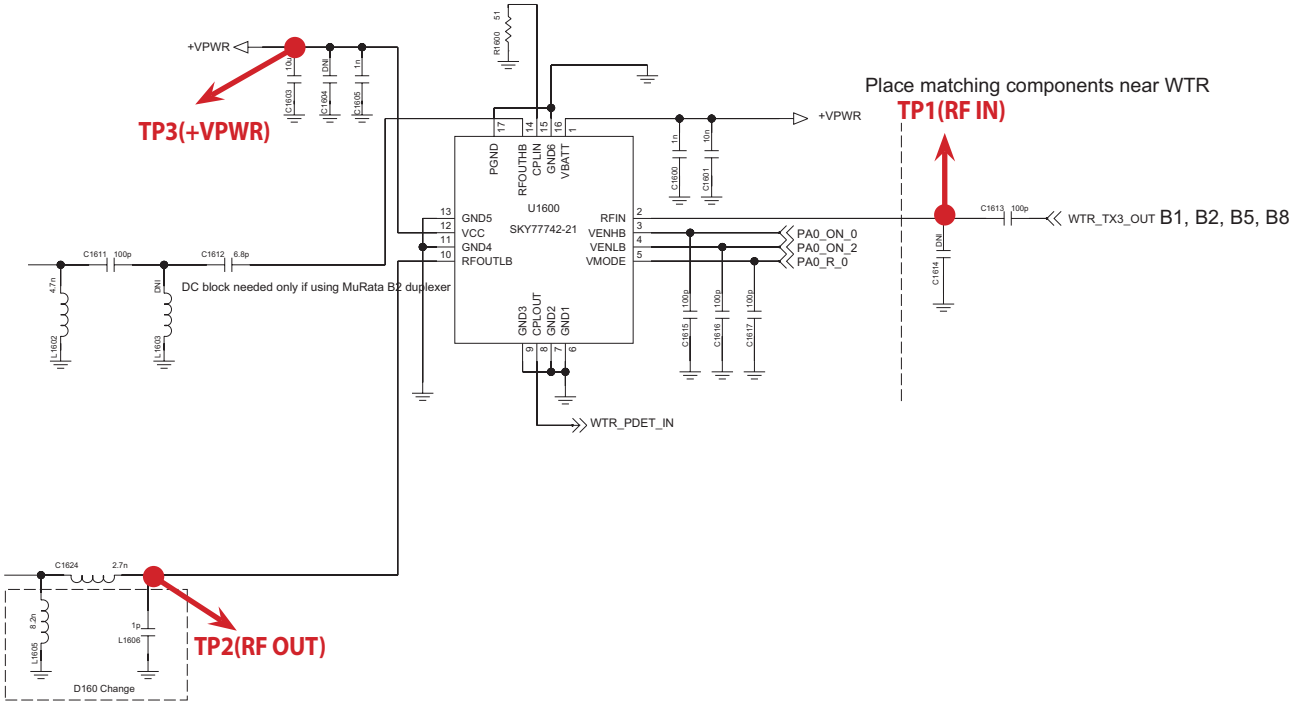

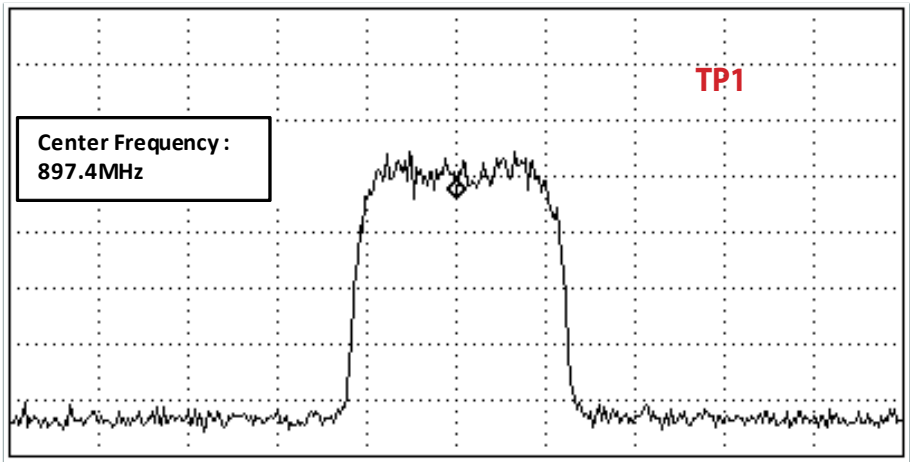

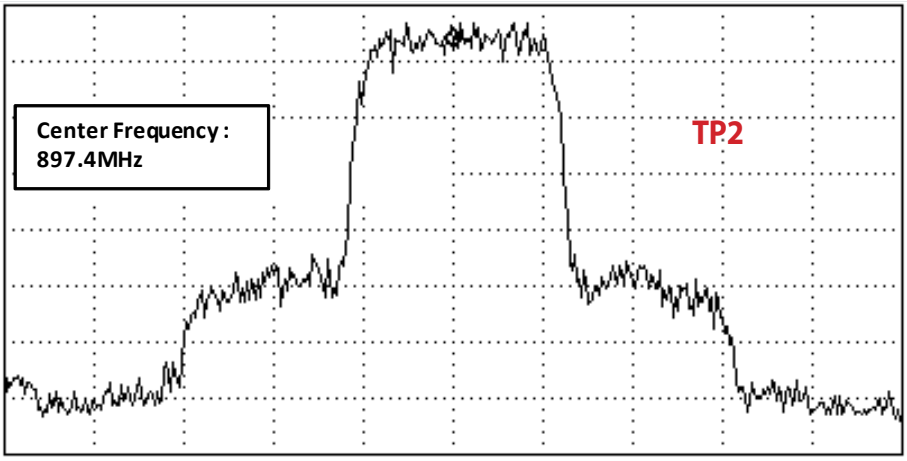

Figure 3.2.1.4

3.2.2.4 Checking RF signal path (DPX)

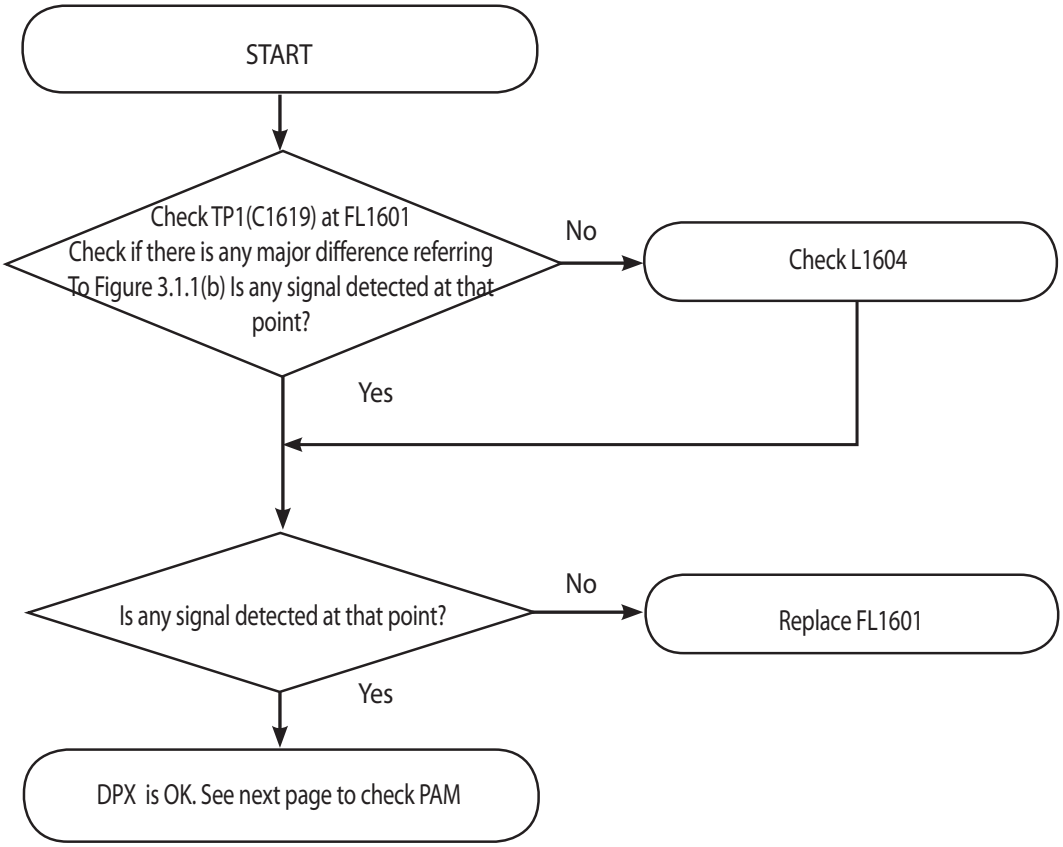

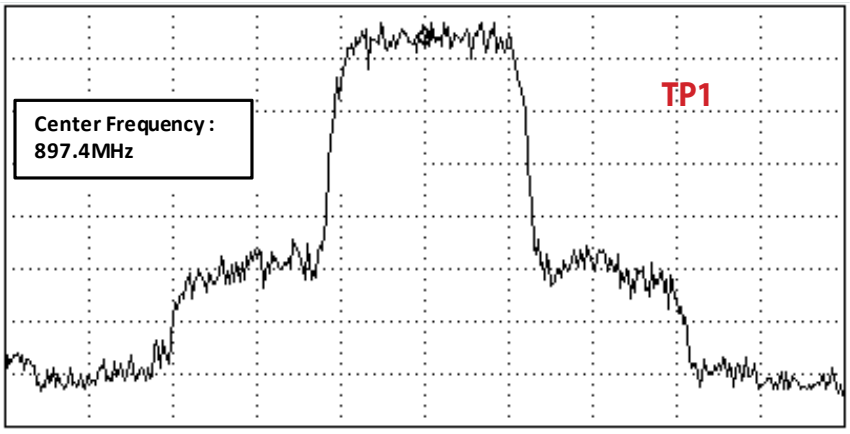

Figure 3.1.1(b)

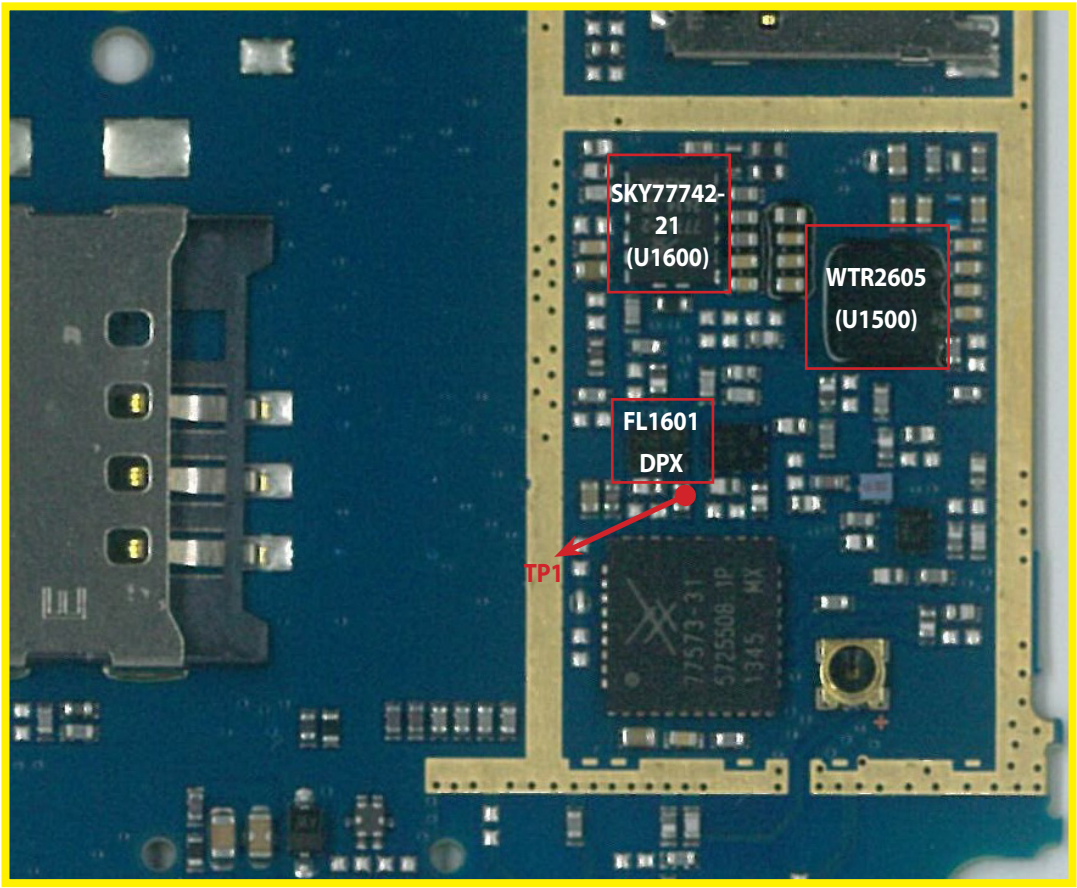

<Main Bot>

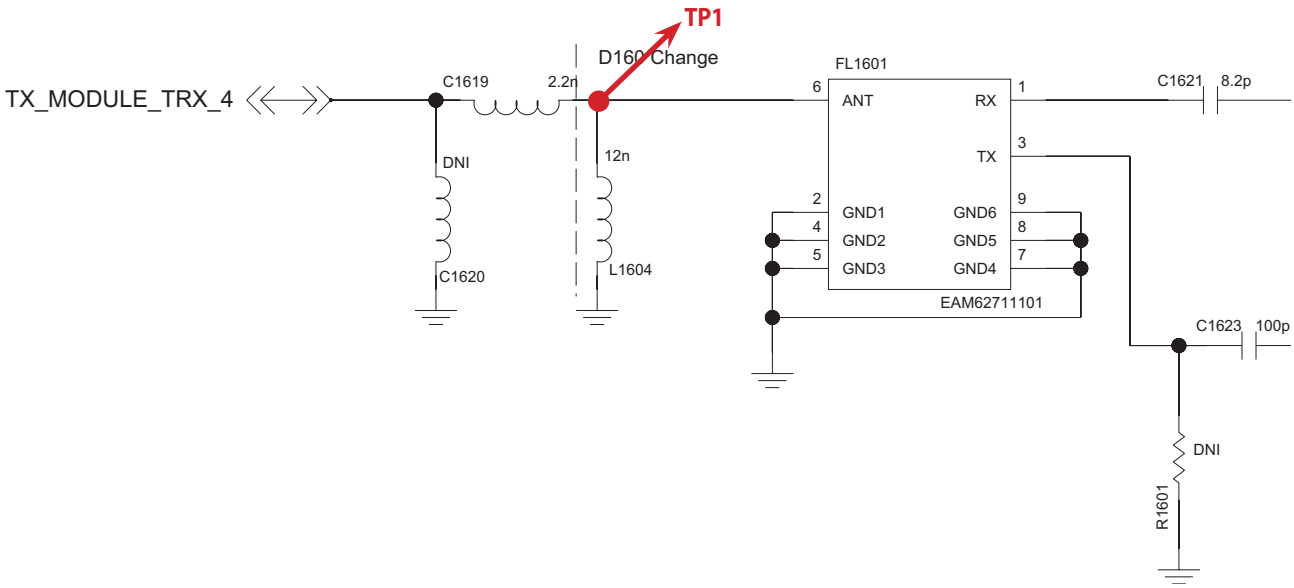

3.2.2.5 Checking RF signal path (TX Module)

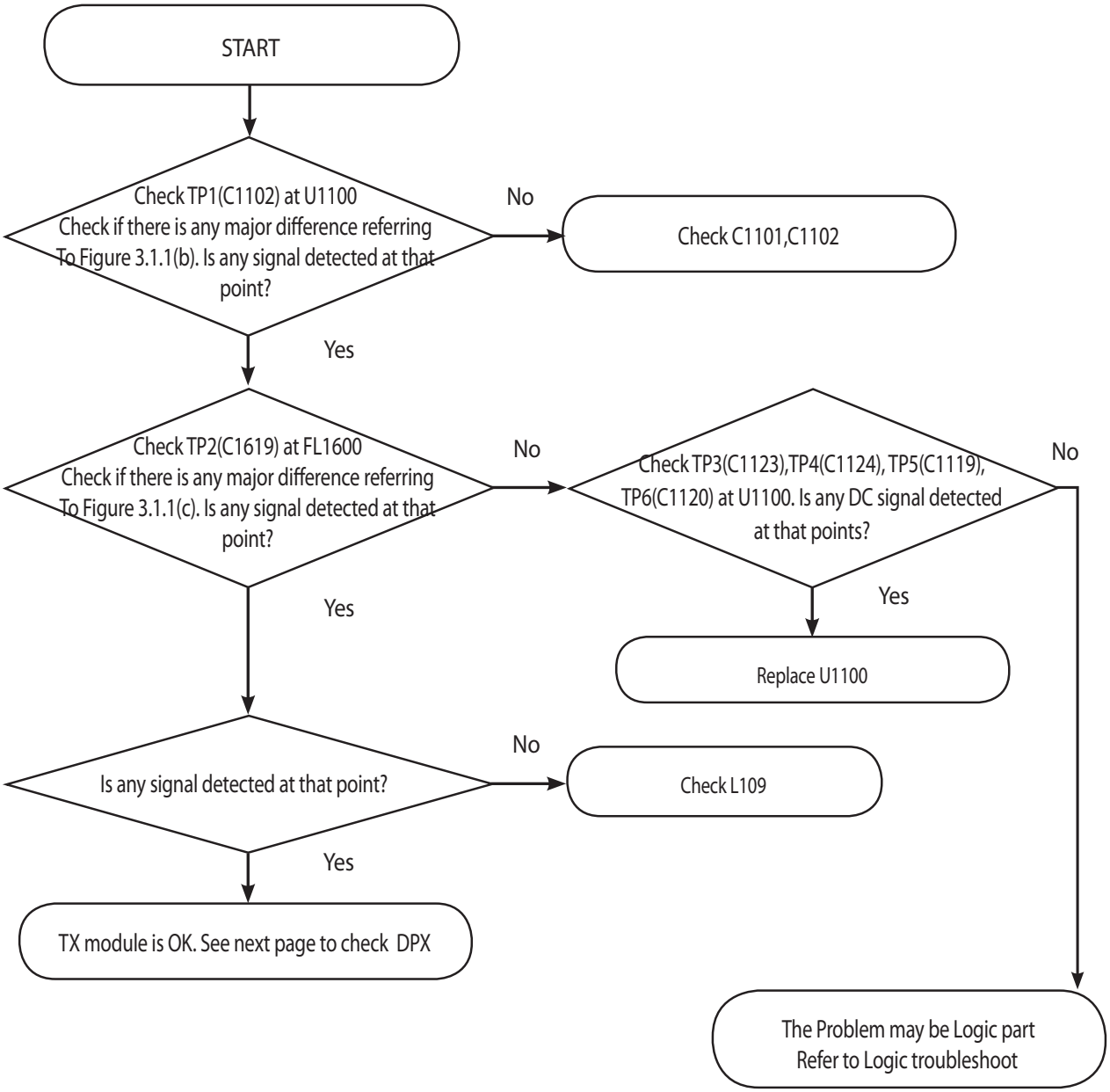

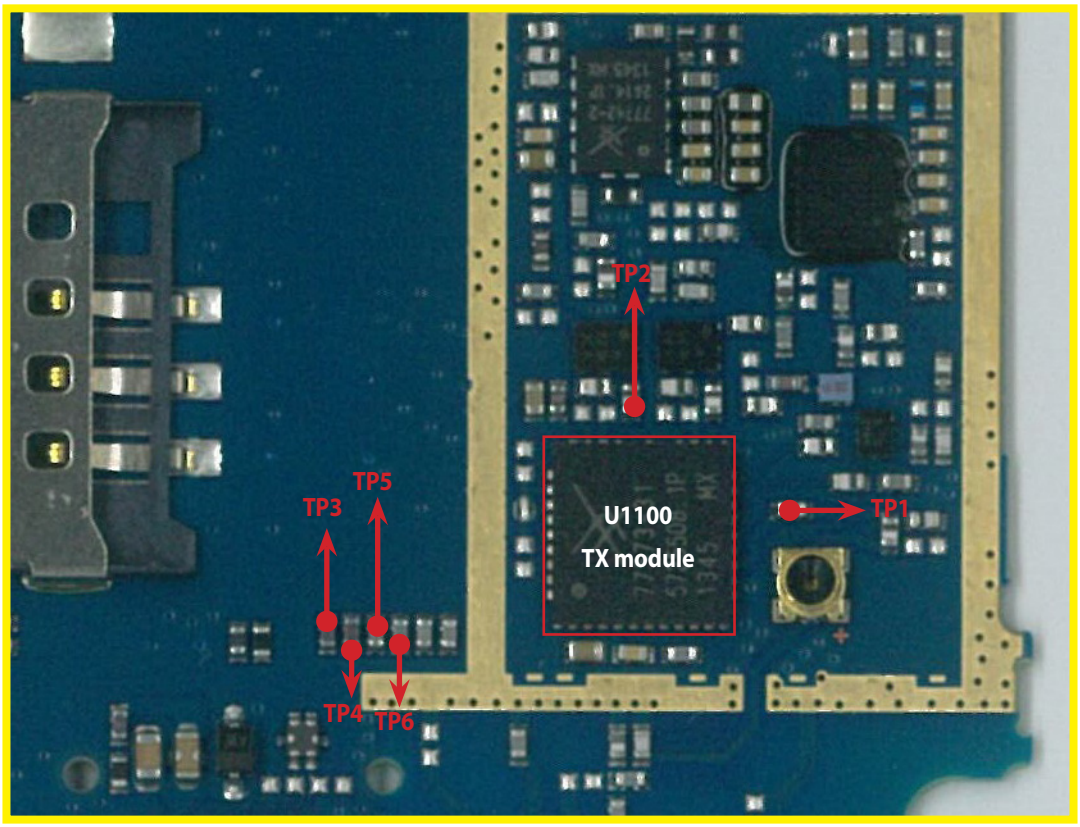

<Main Bot>

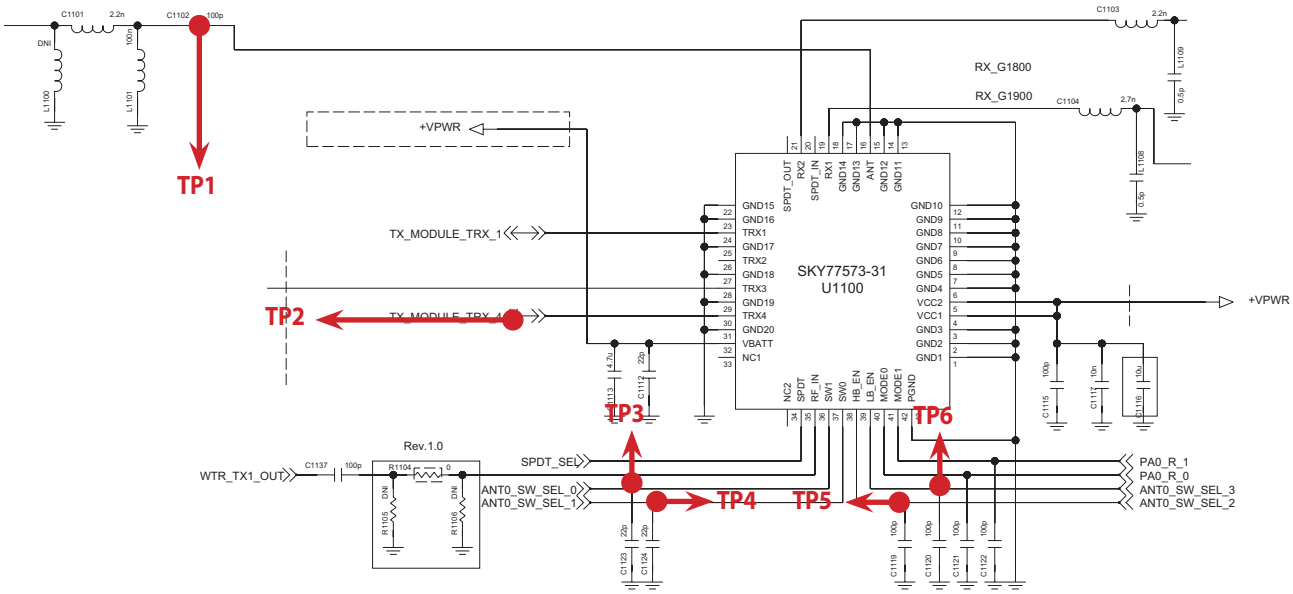

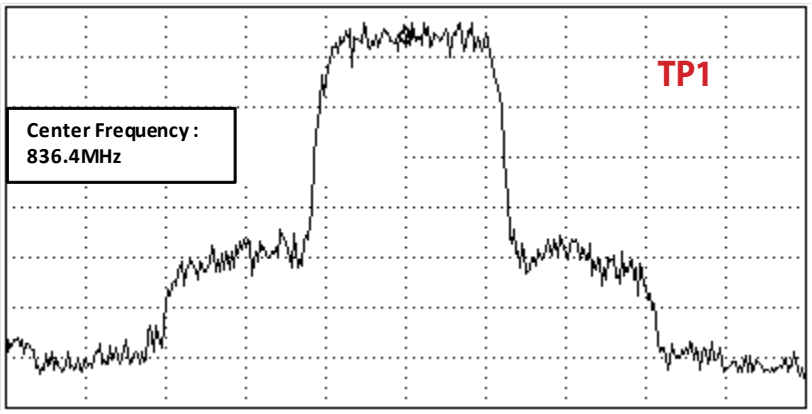

Figure 3.1.1(b)

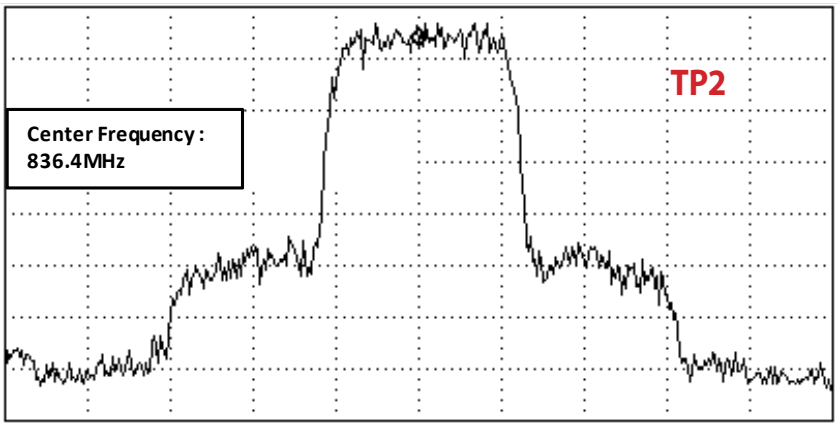

Figure 3.1.1(c)

3.3 GSM Rx Part Troubleshooting

3.3.1 GSM850/900 Rx

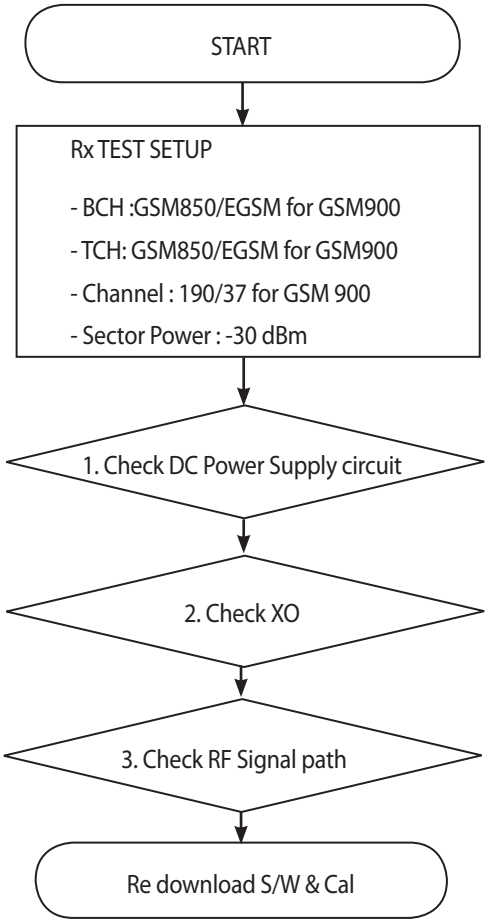

* There are no Test Points on the IQ Data Line. So It is impossible to check the IQ Data Wave form

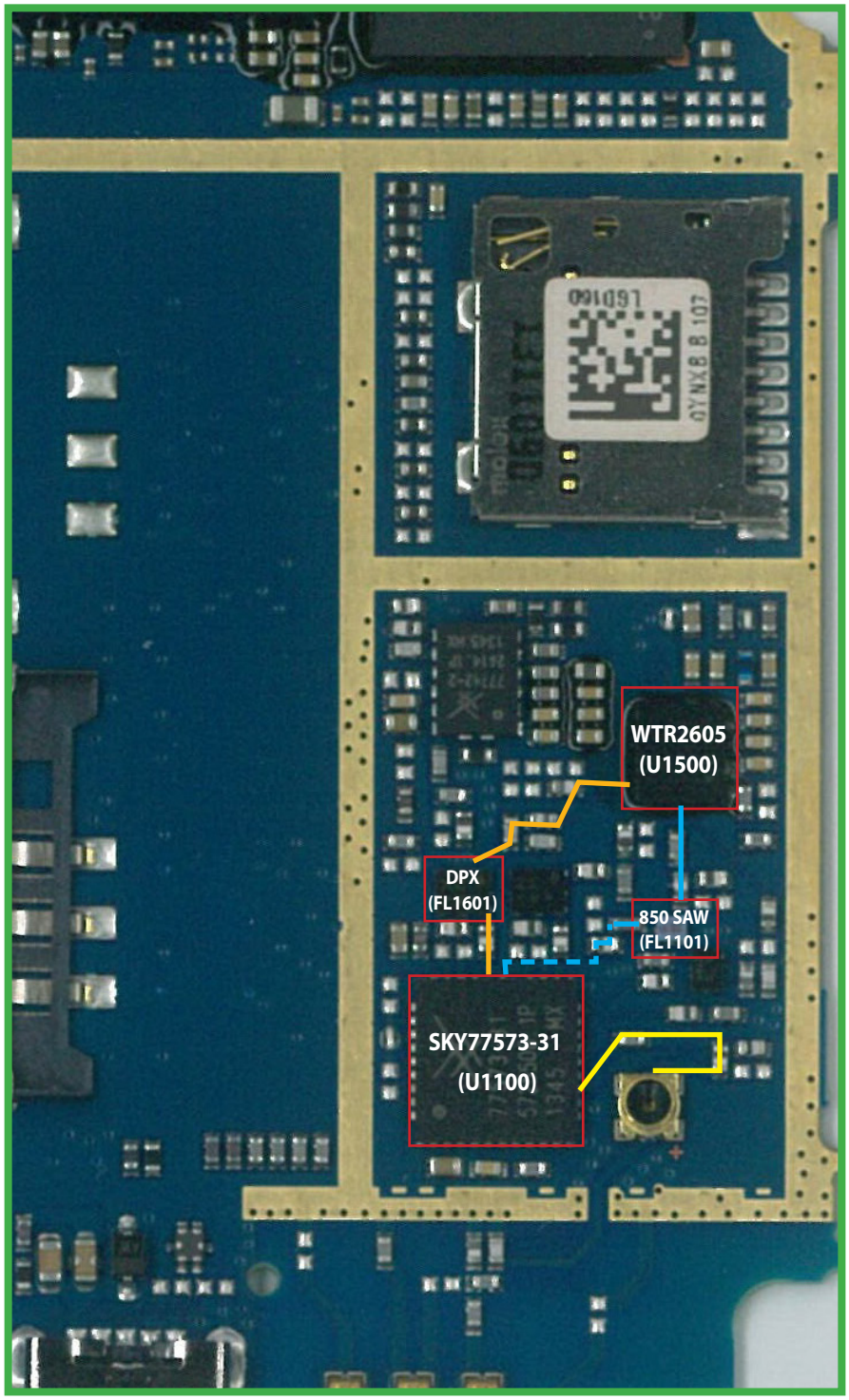

GSM900

GSM850

3.3.1.1 Checking DC Power supply circuit

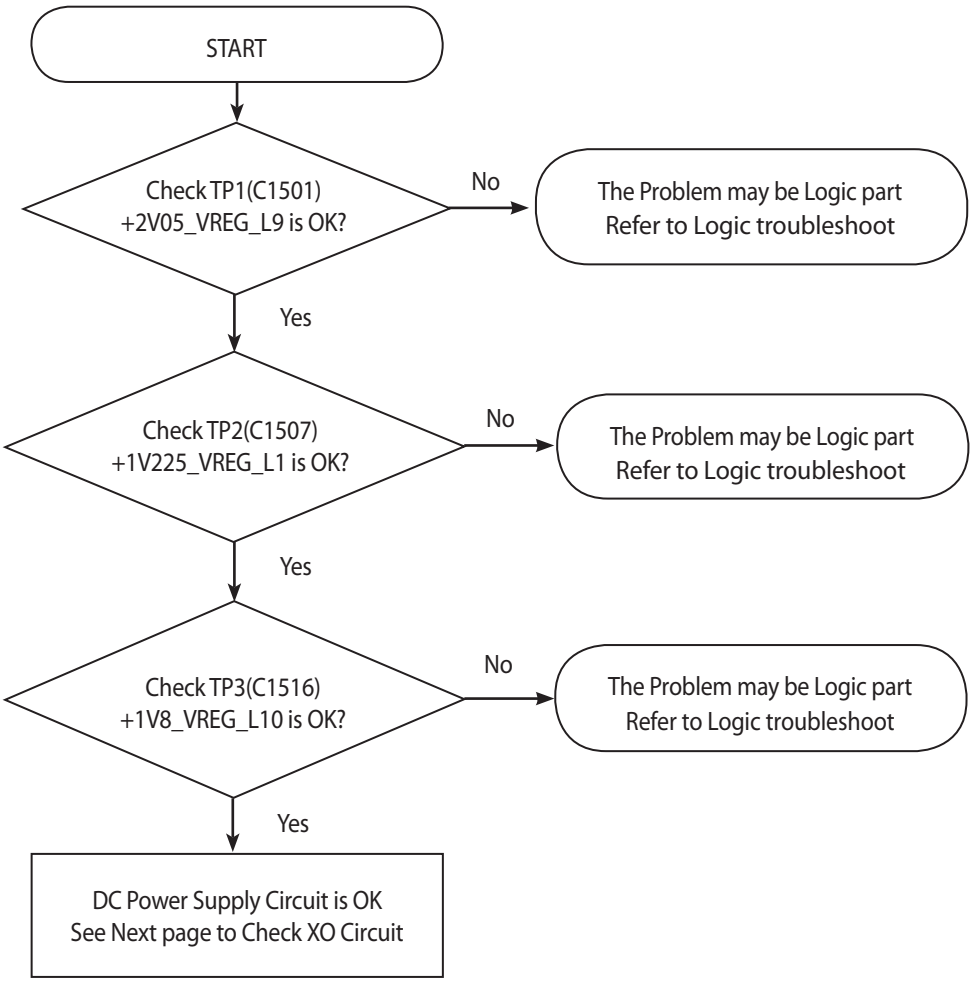

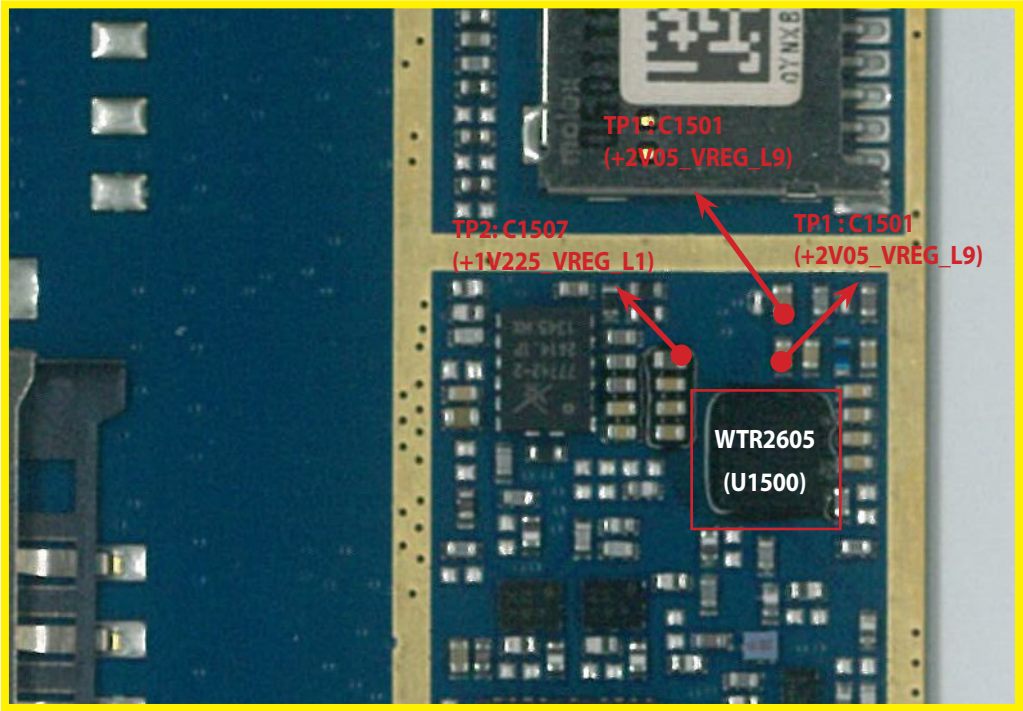

<Main Bot>

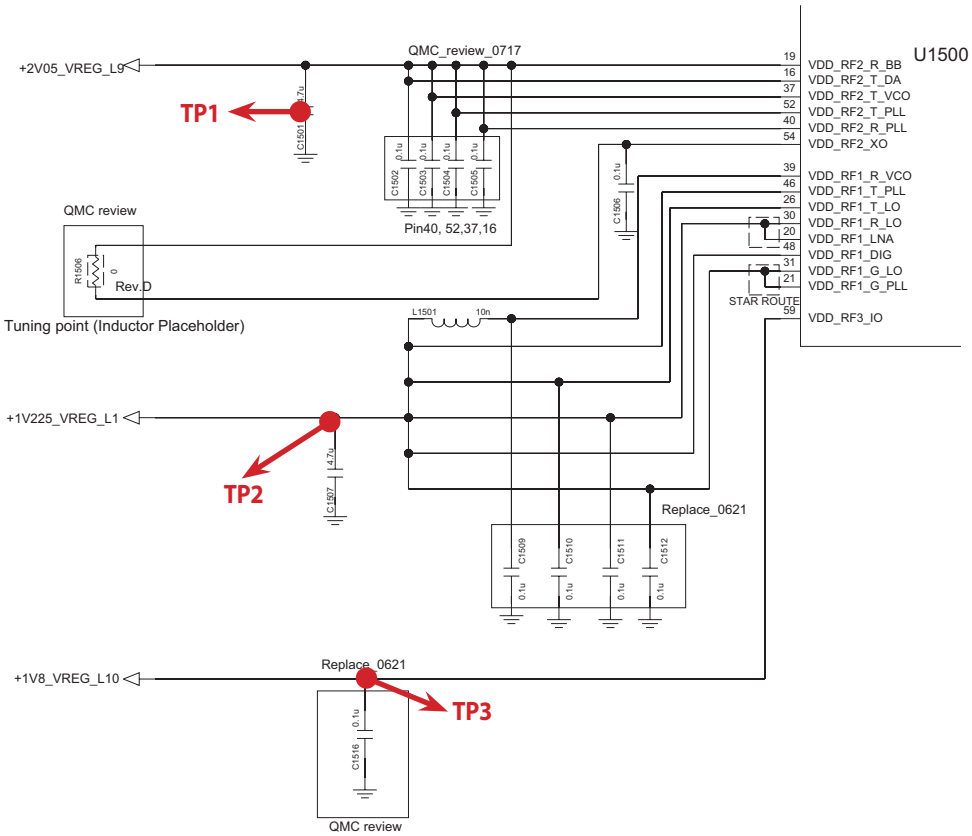

3.3.1.2 Checking XO circuit

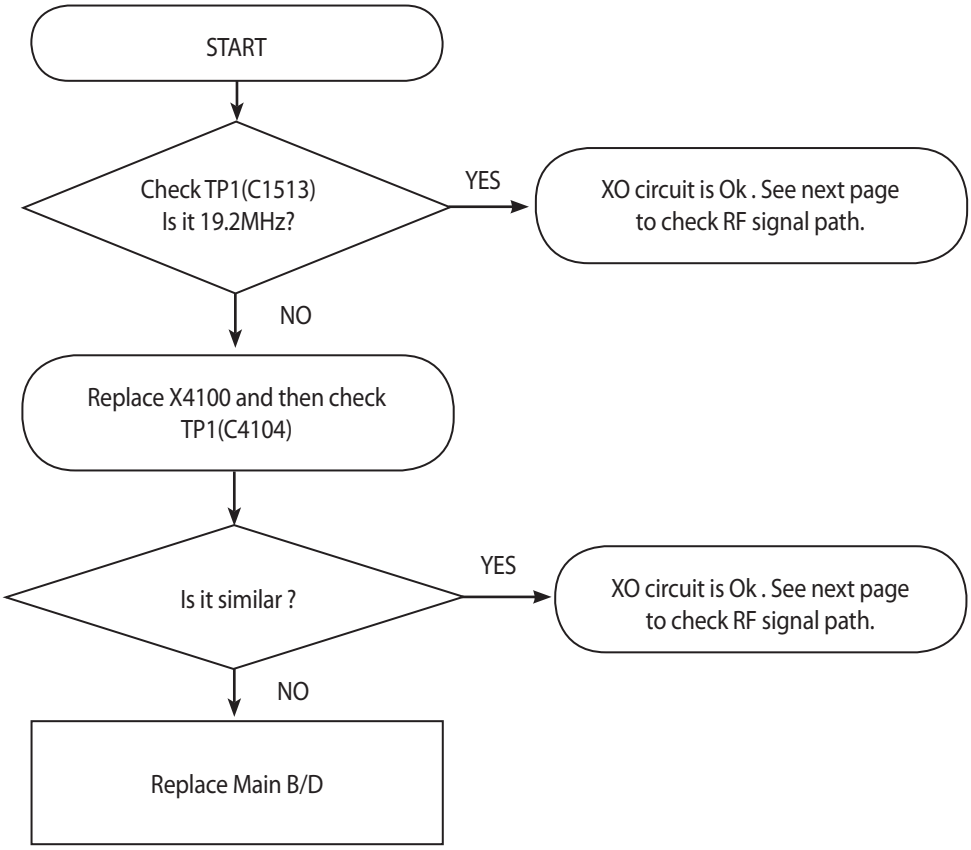

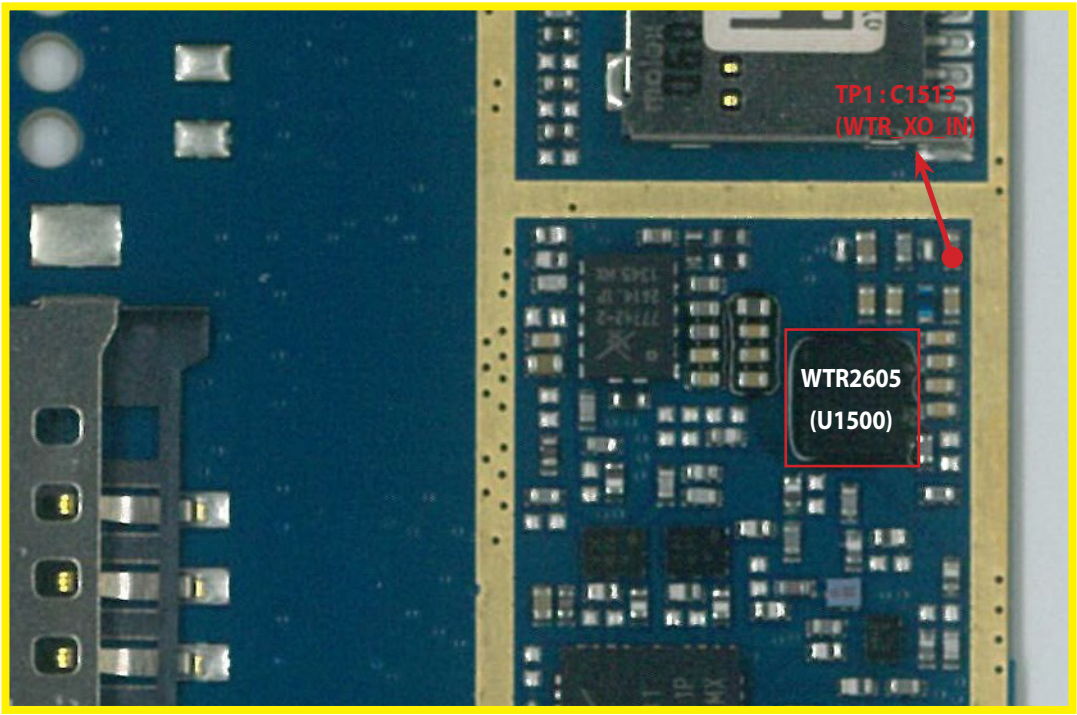

<Main Bot>

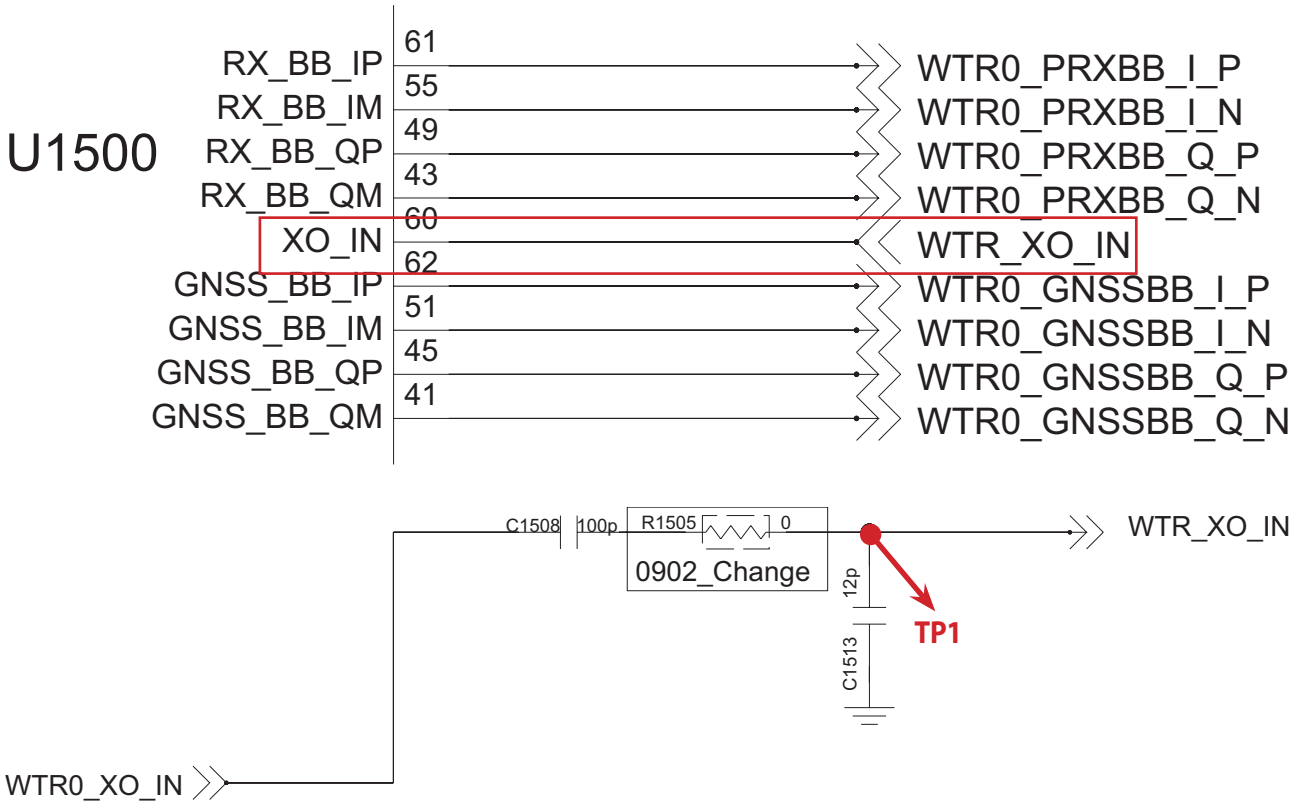

3.3.1.3 Checking RF signal path (TX Module)

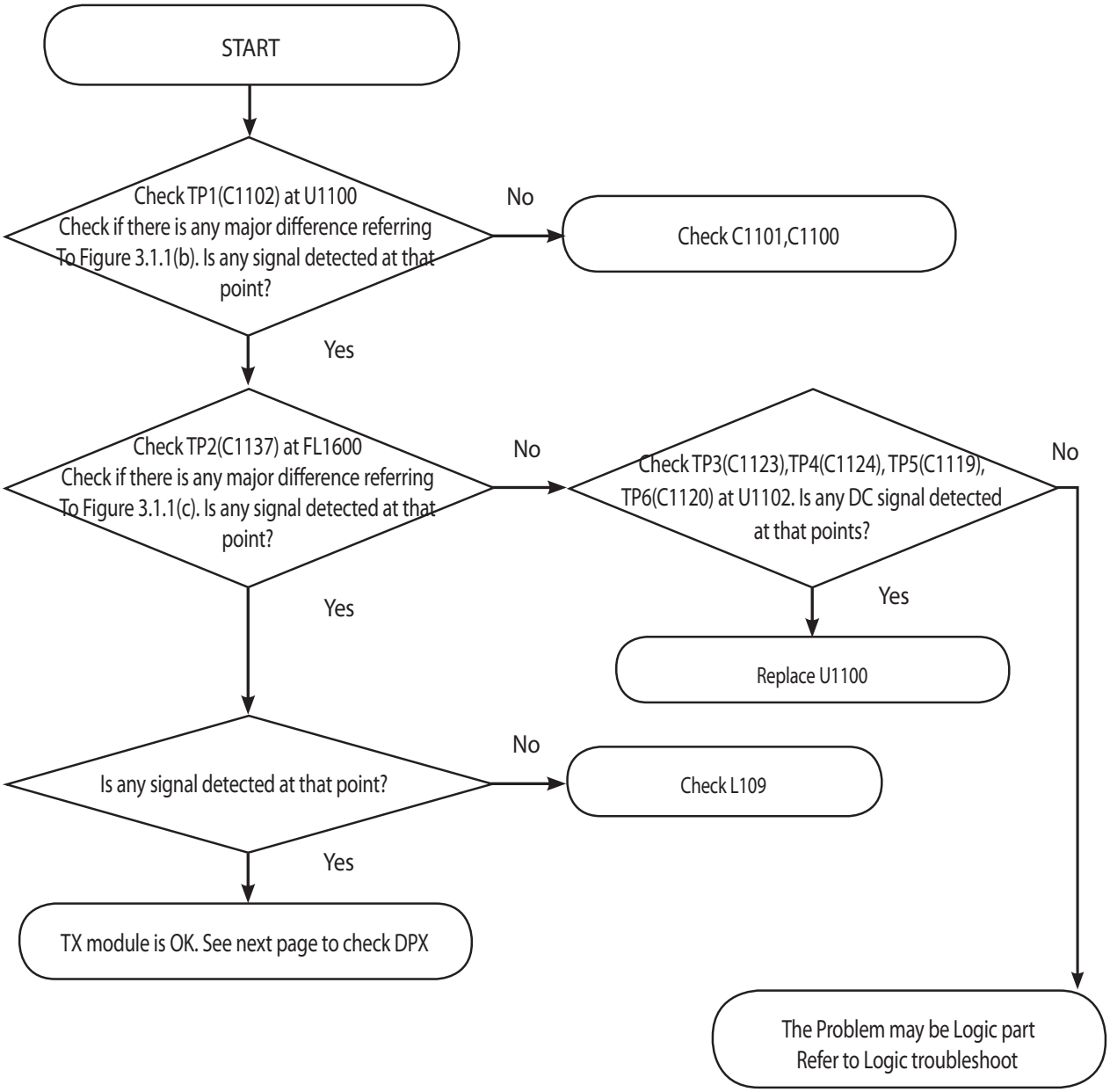

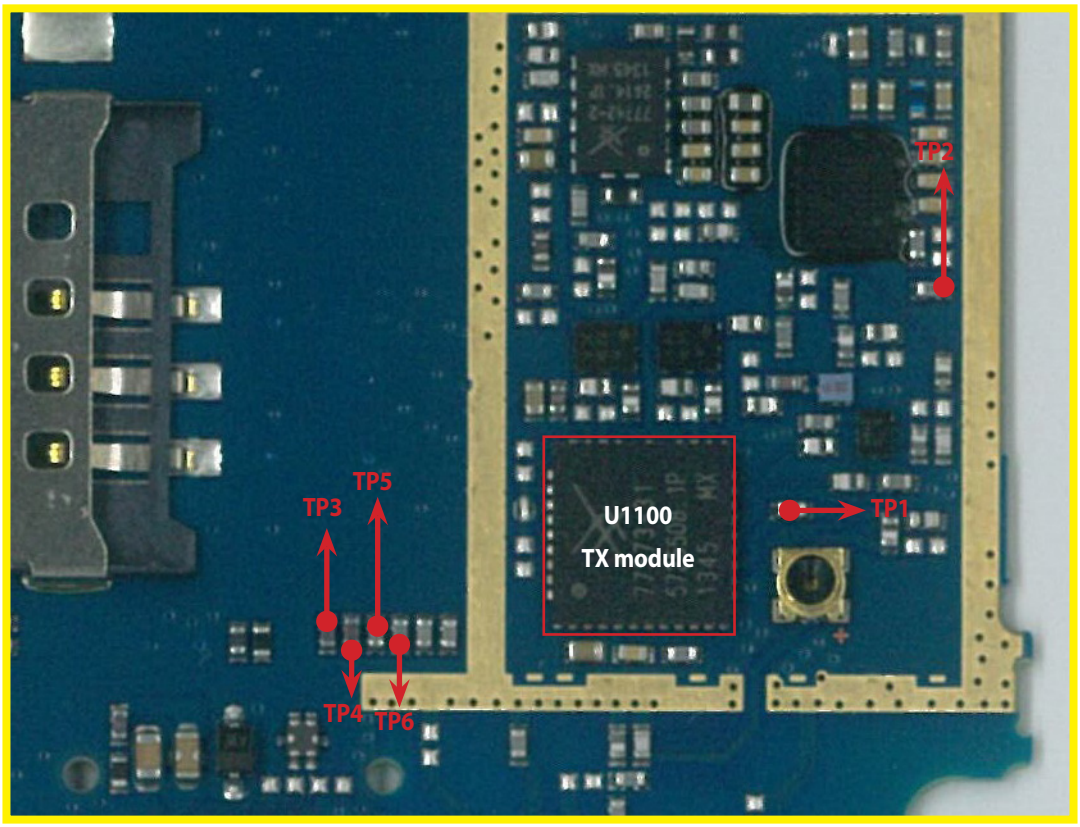

<Main Bot>

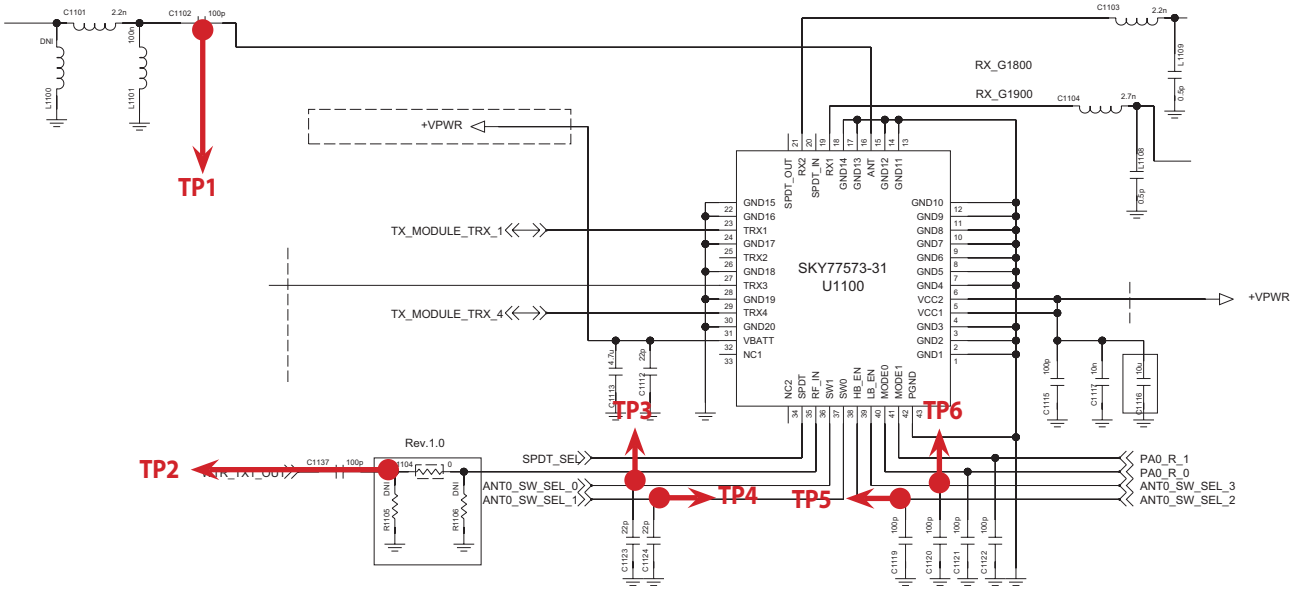

3.3.2 GSM1800/1900 Rx

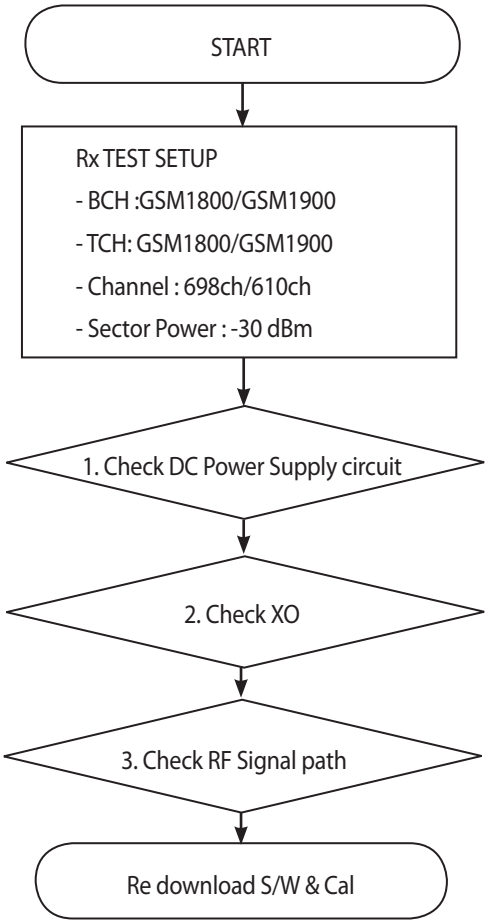

* There are no Test Points on the IQ Data Line. So It is impossible to check the IQ Data Wave form

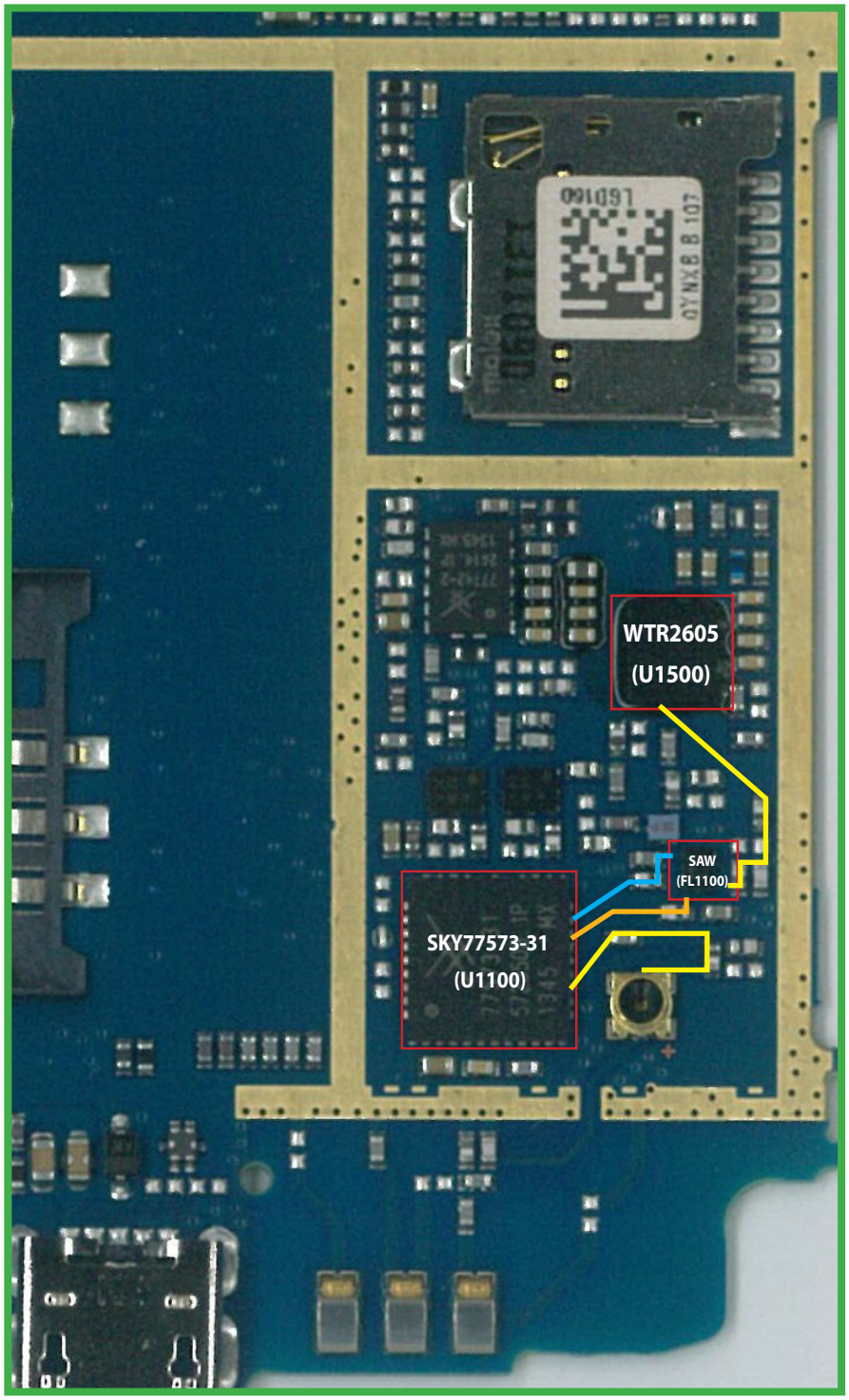

PCS1900

DCS1800

3.3.2.1 Checking DC Power supply circuit

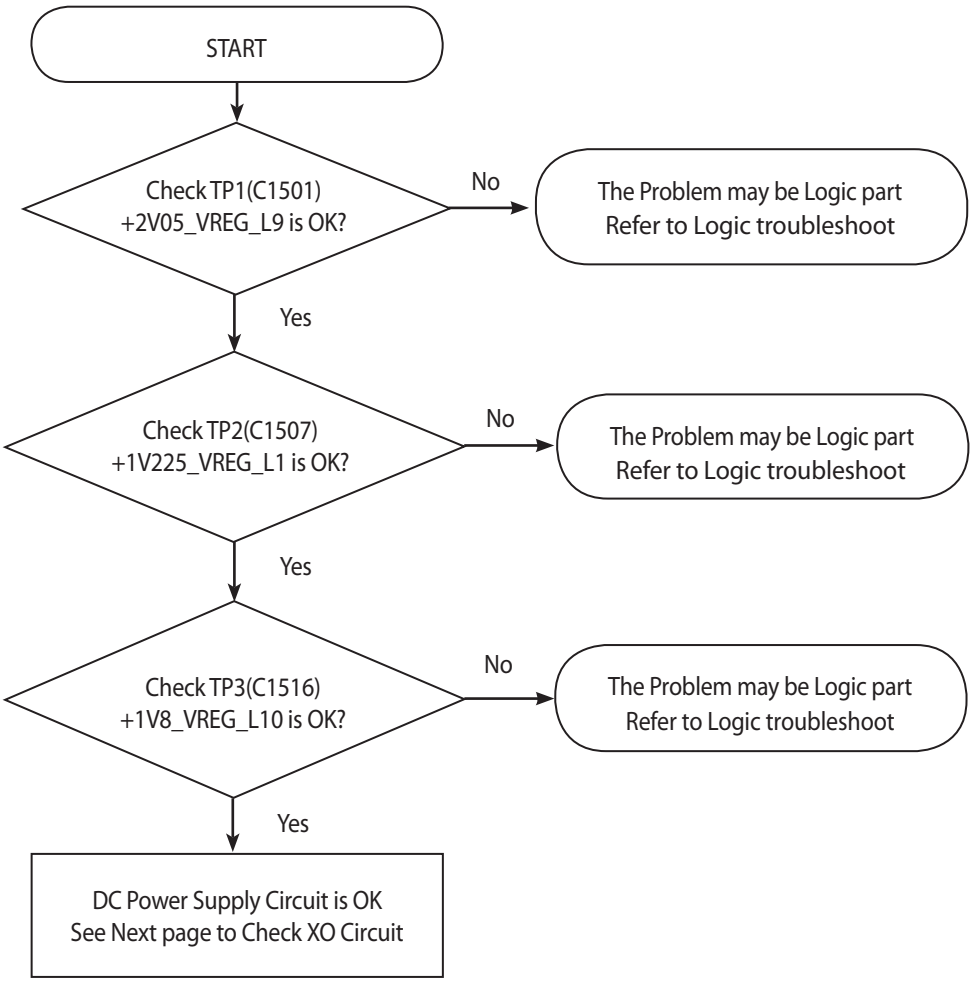

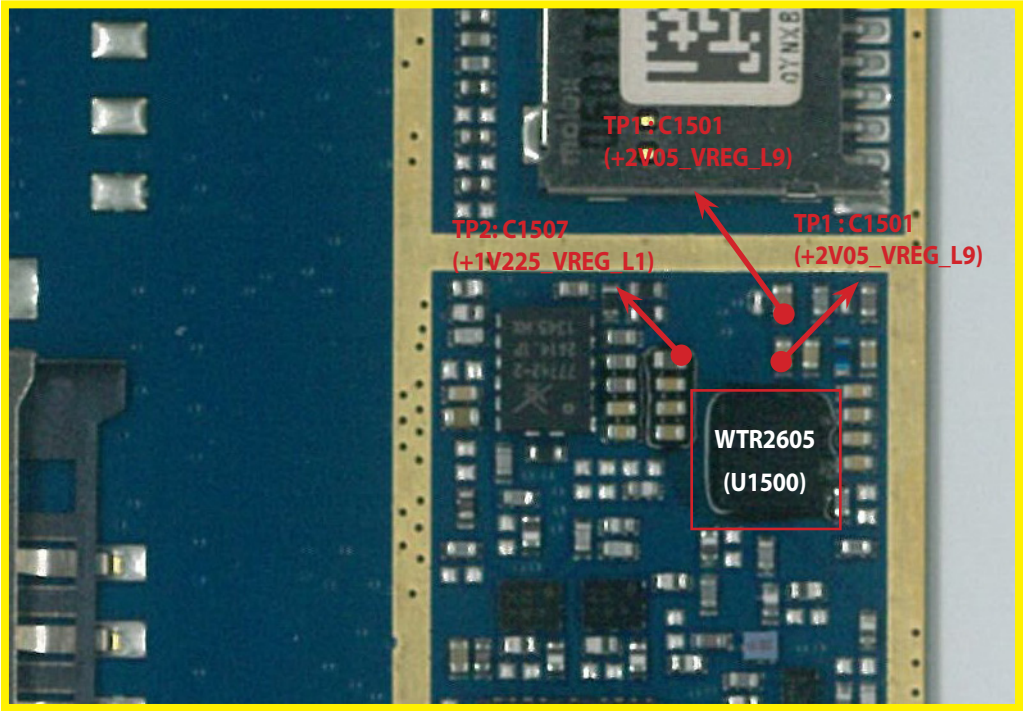

<Main Bot>

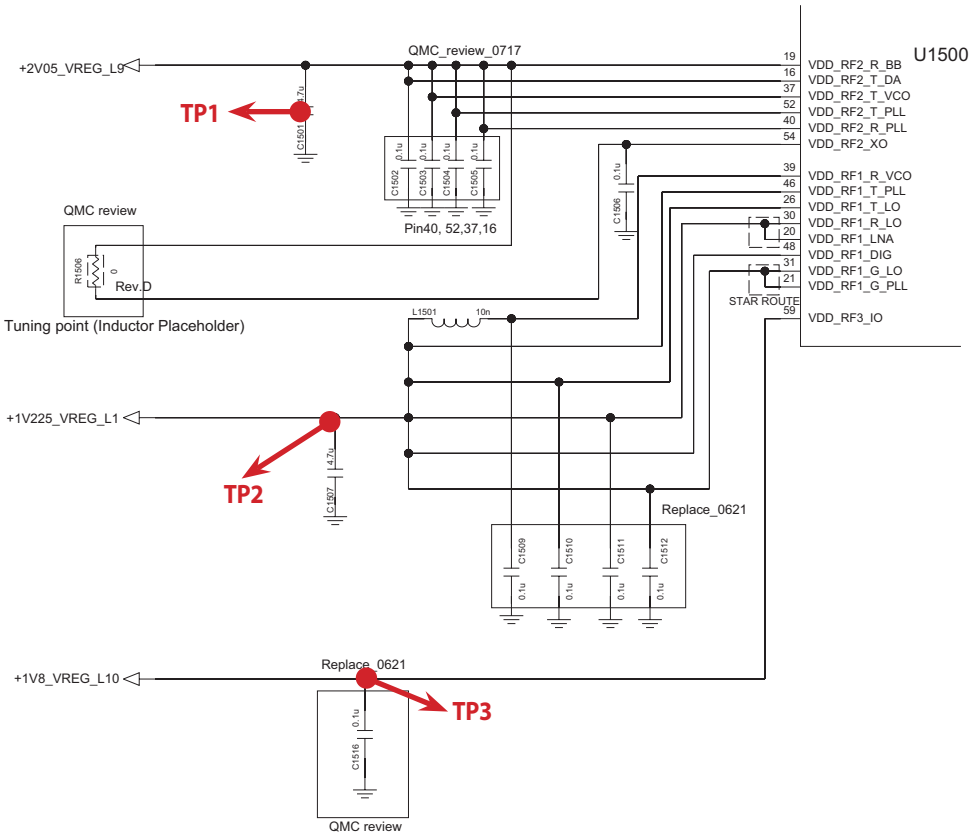

3.3.2.2 Checking XO circuit

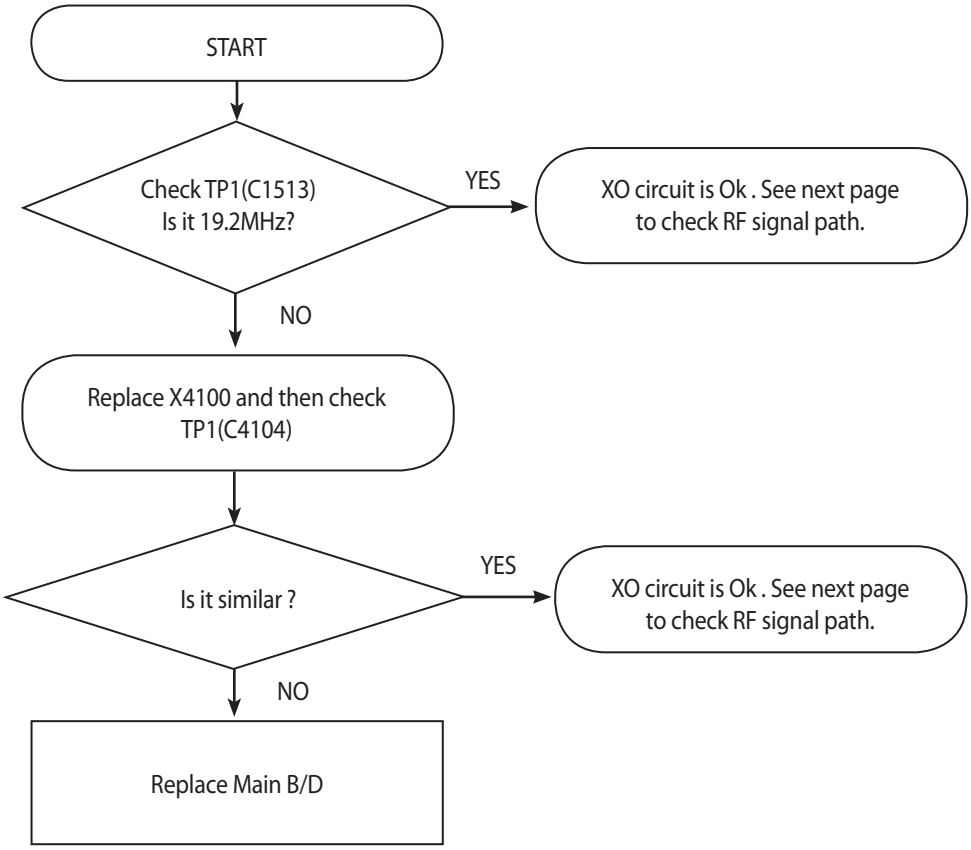

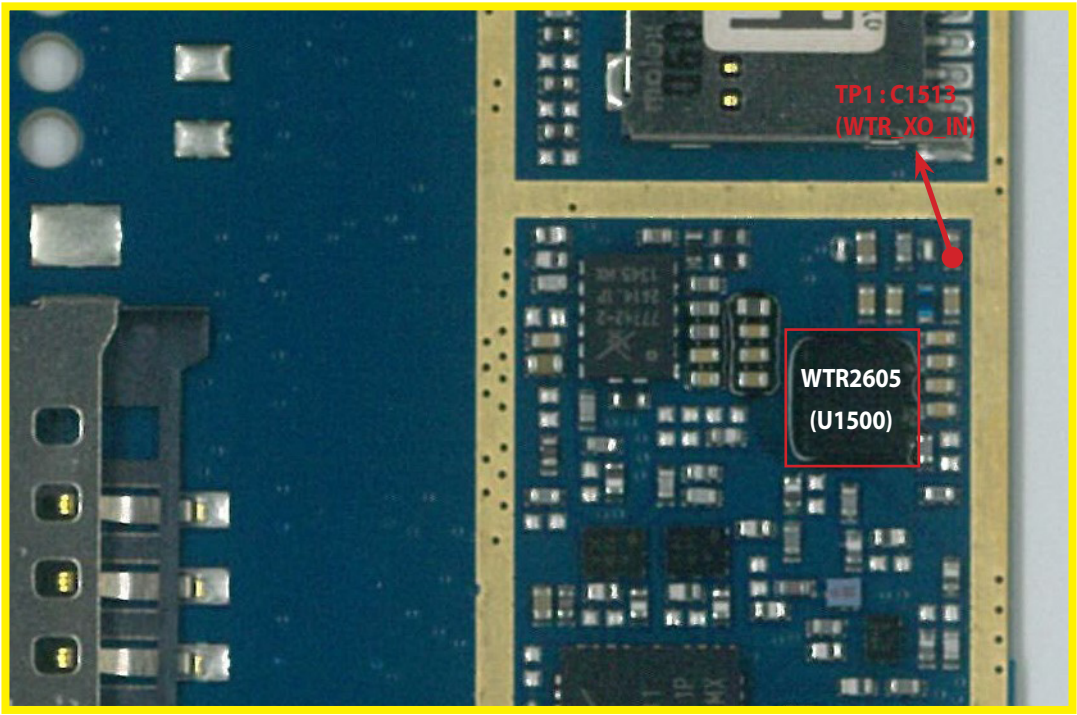

<Main Bot>

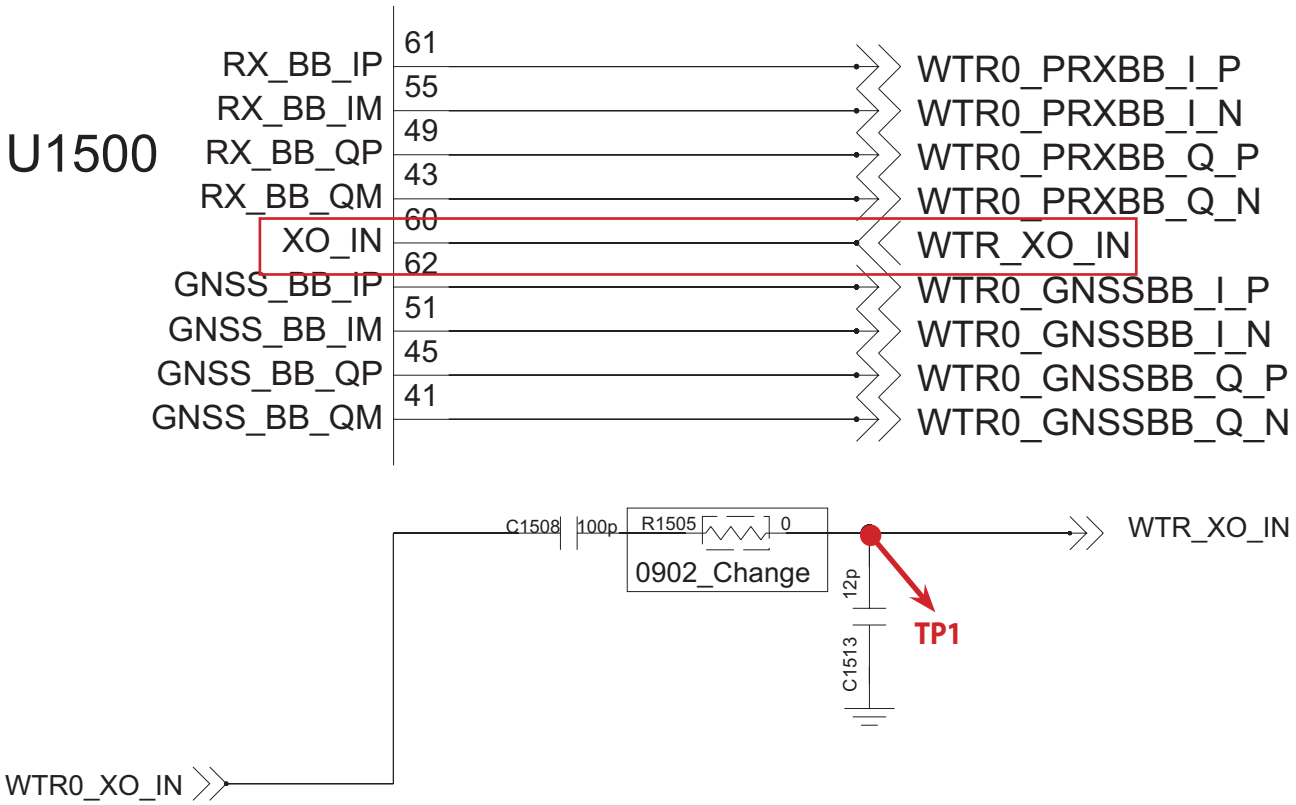

3.3.2.3 Checking RF signal path (TX Module)

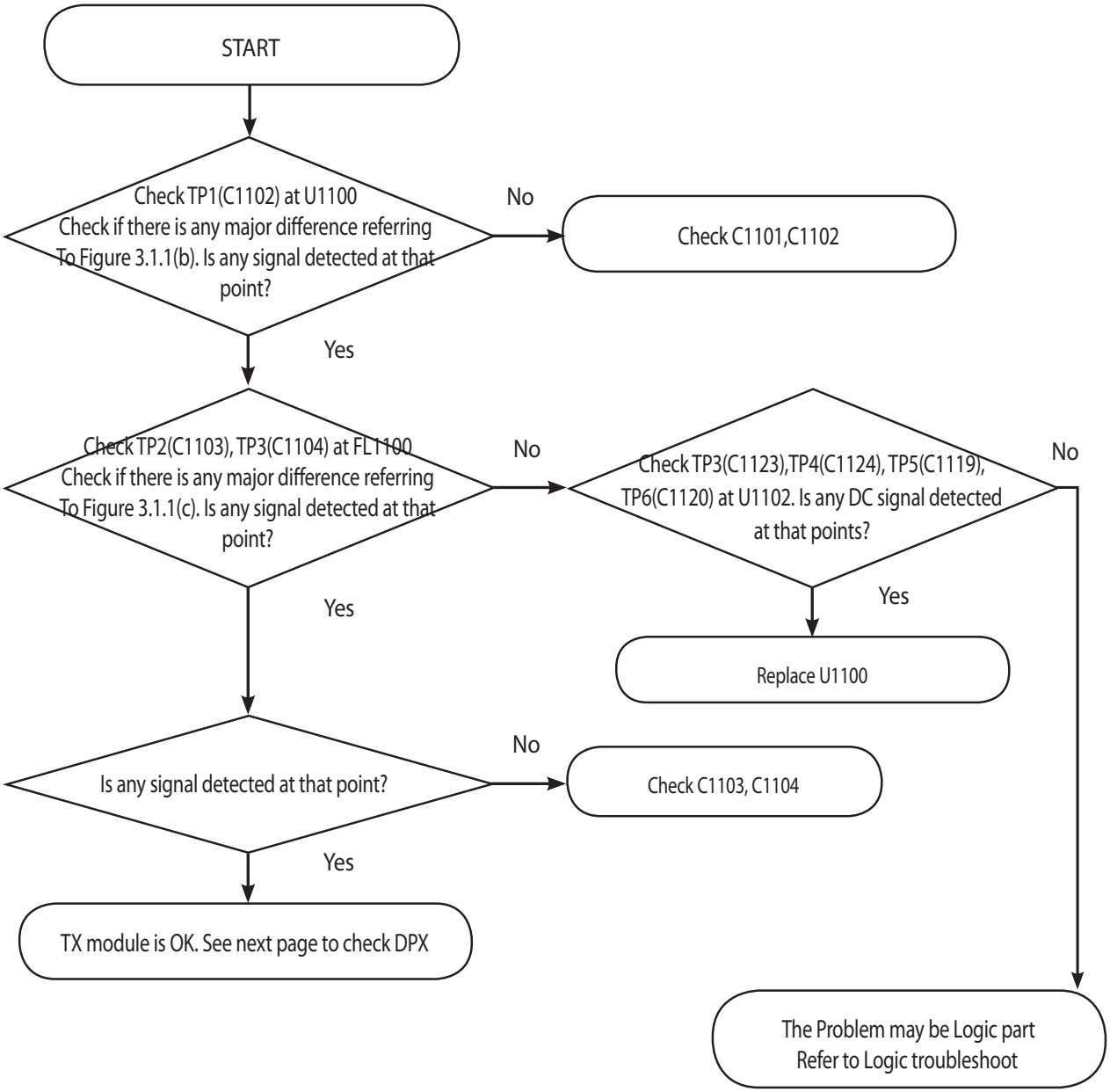

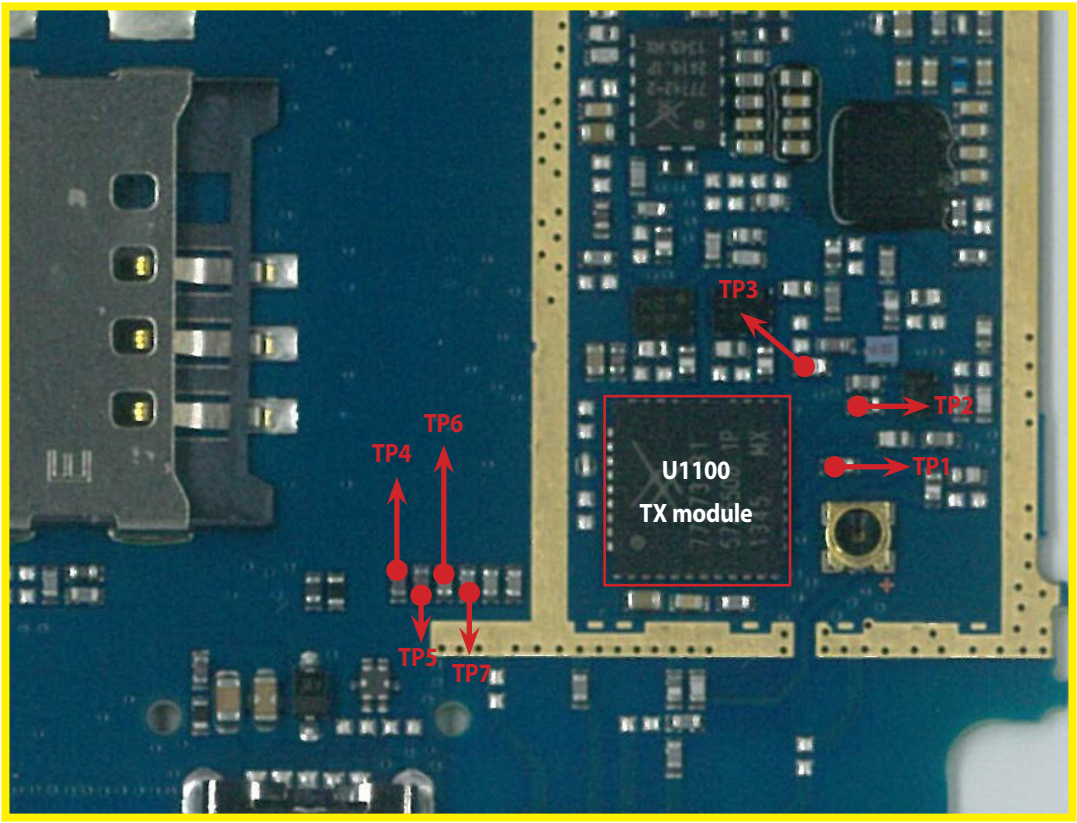

<Main Bot>

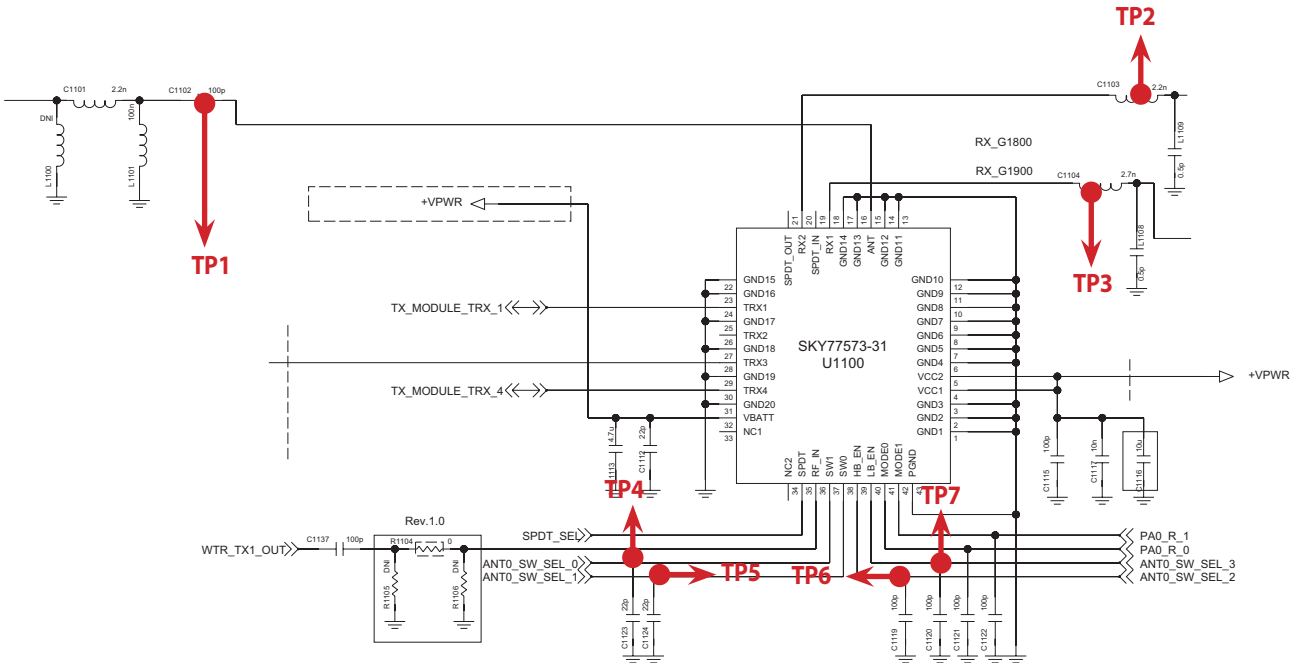

3.3.2.4 Checking RF Flow(SAW filter)

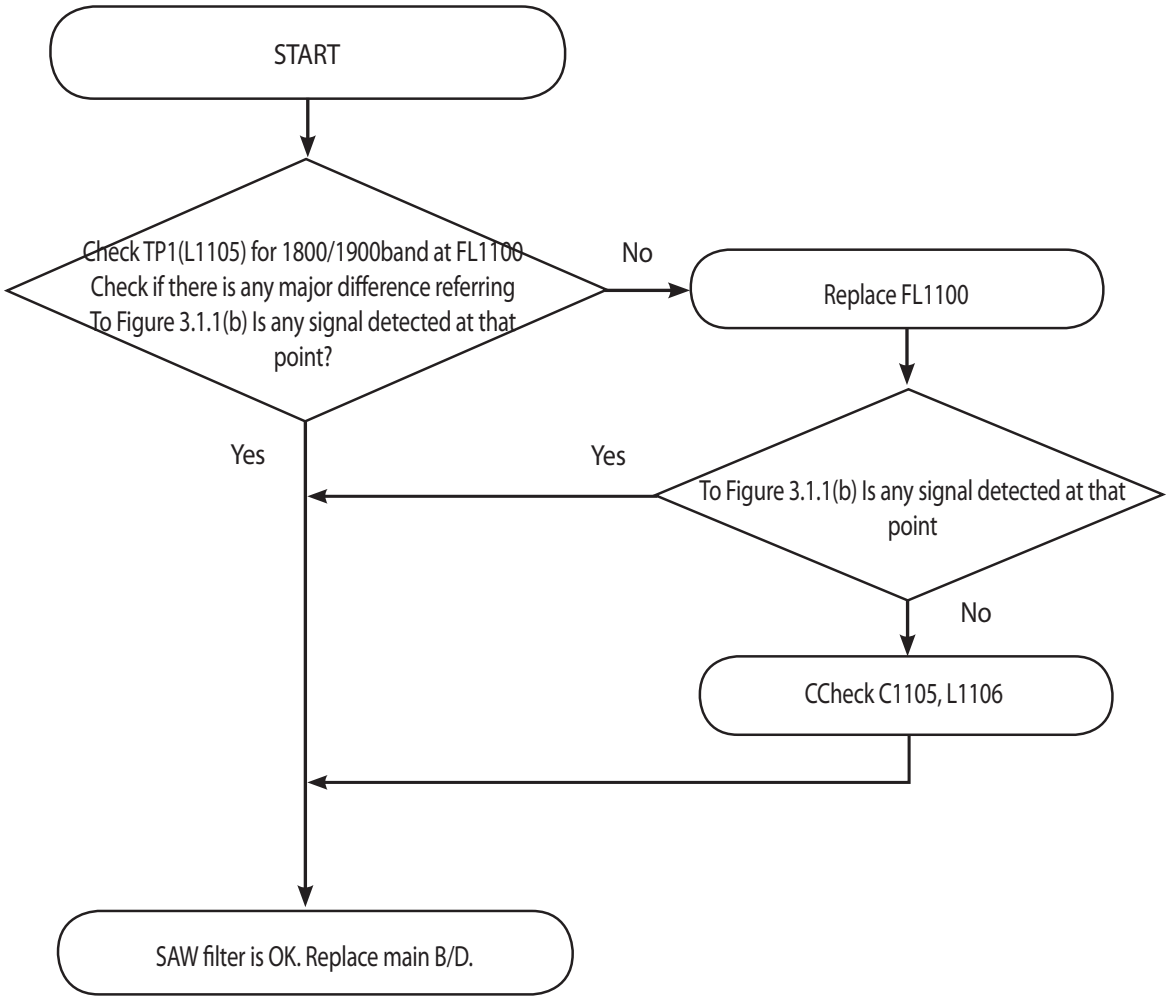

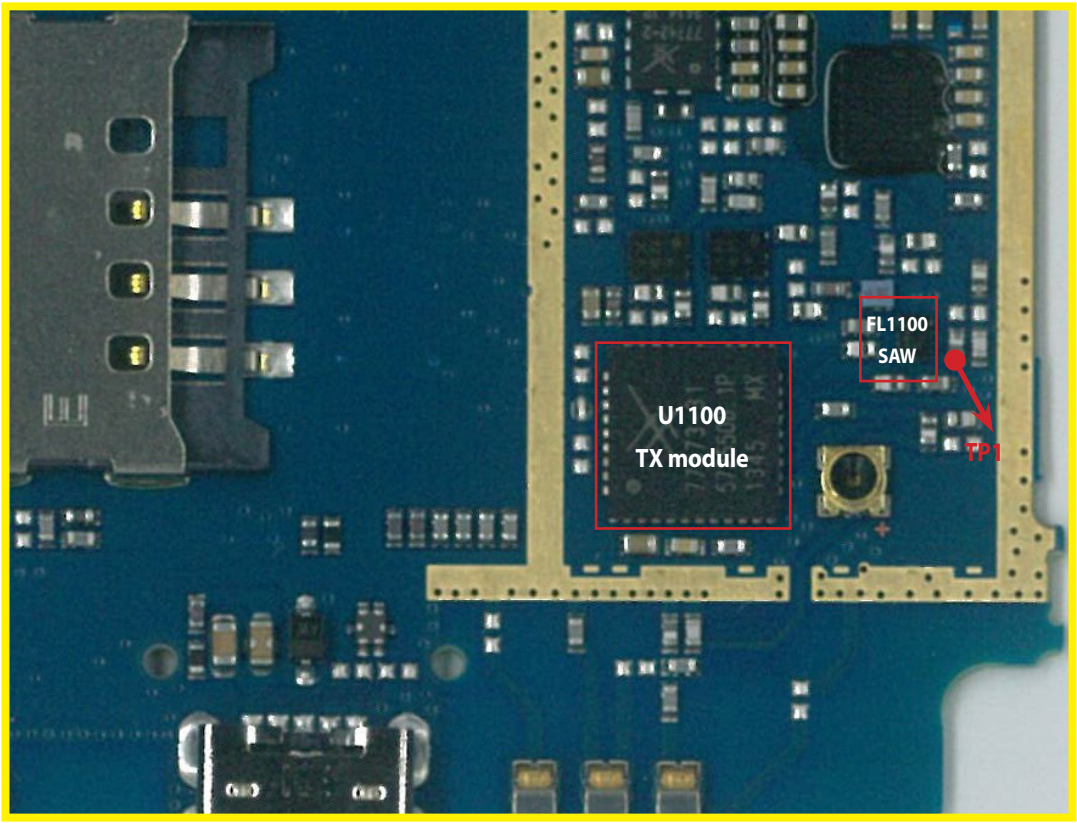

<Main Bot>

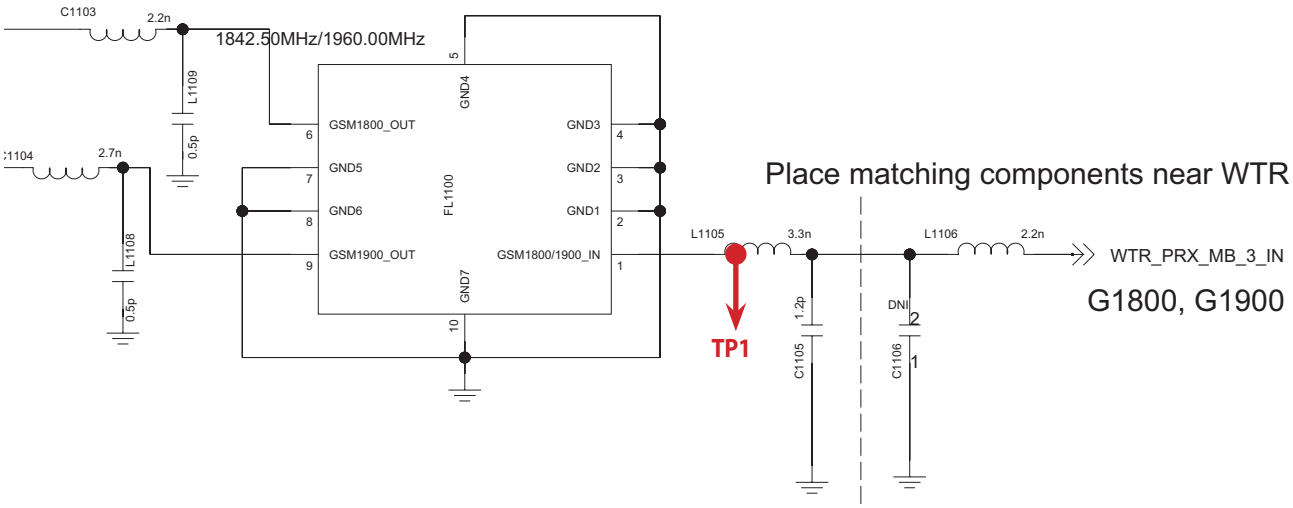

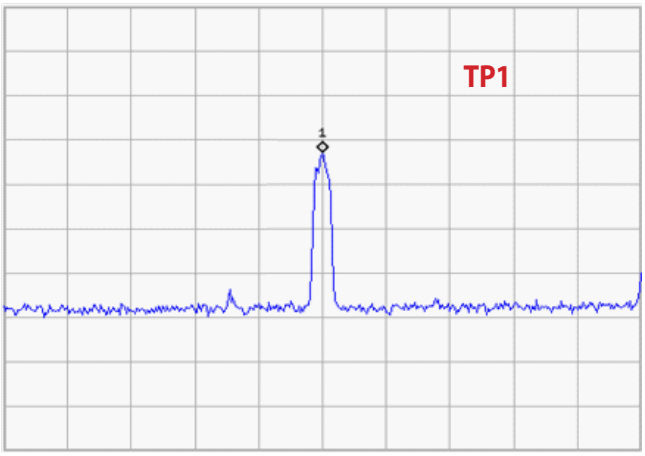

Figure 3.1.1(b)

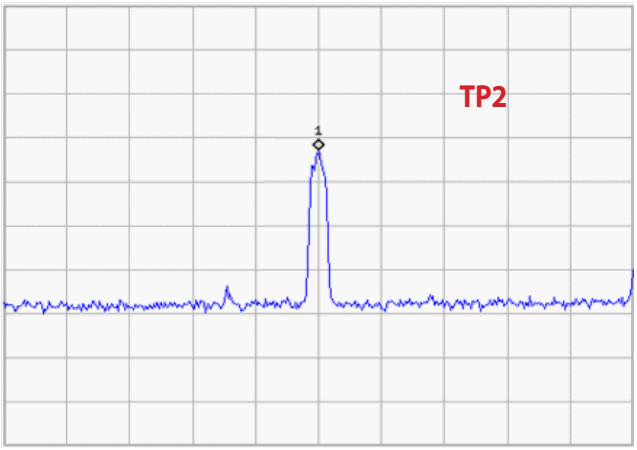

Figure 3.1.1(c)

3.4 GSM Tx Part Troubleshooting

3.4.1 GSM850/900 Tx

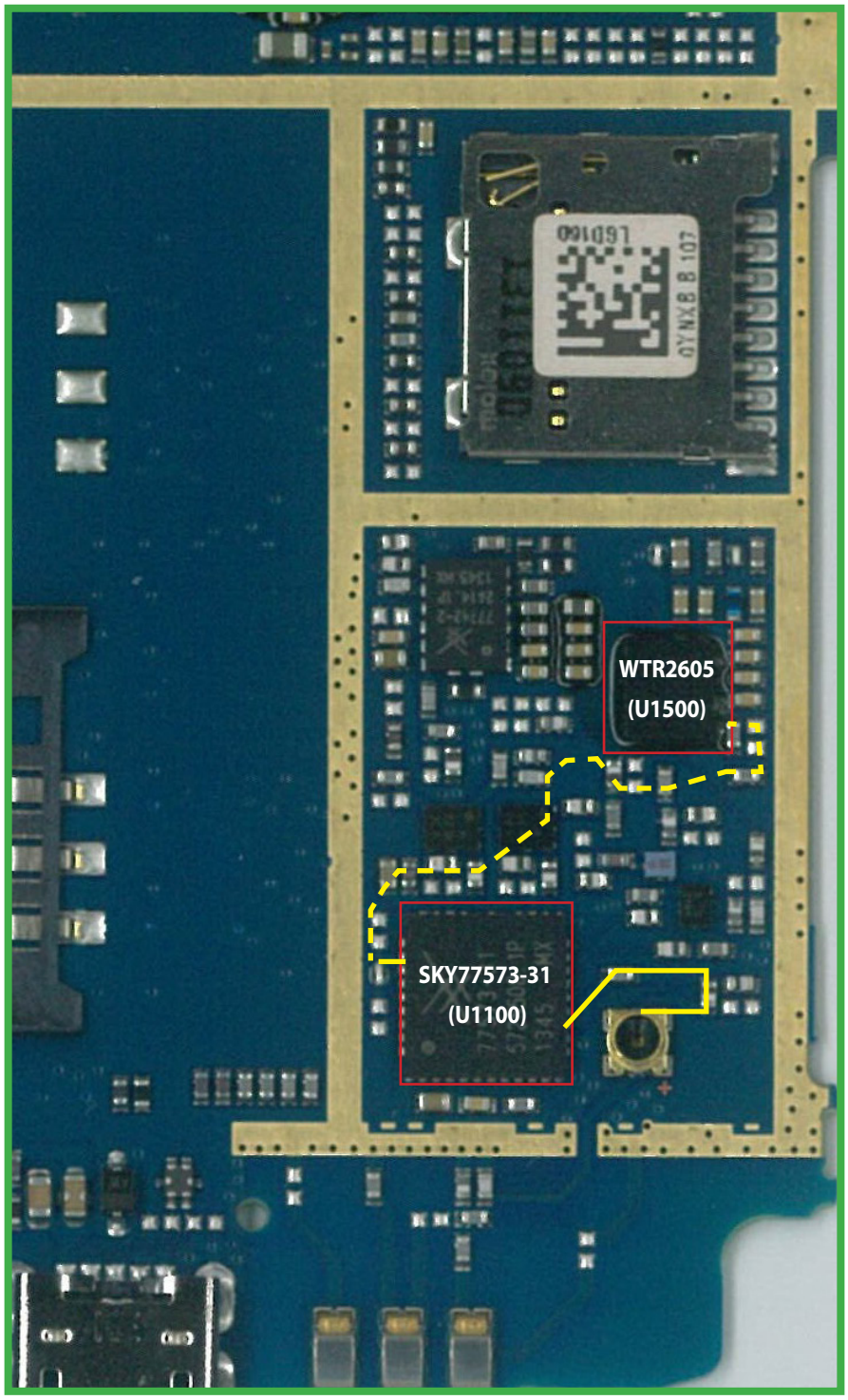

3.4.1.1 Checking DC Power supply circuit

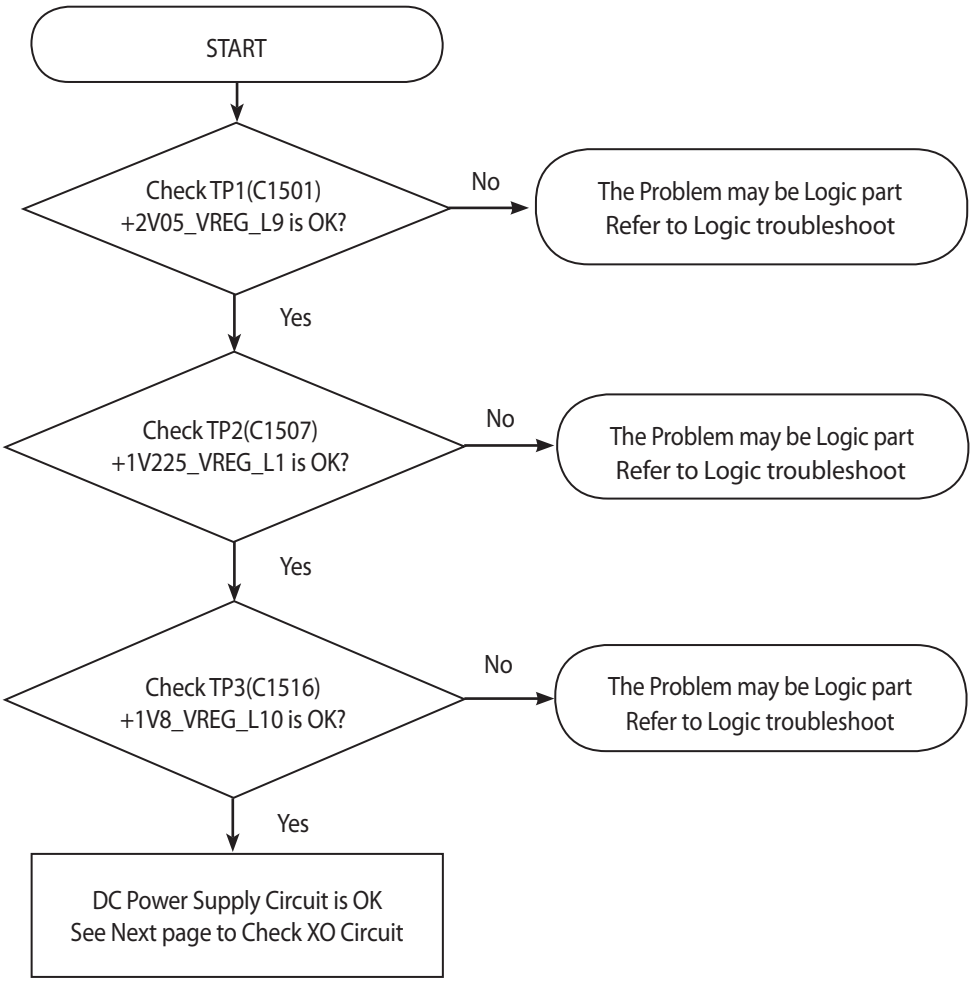

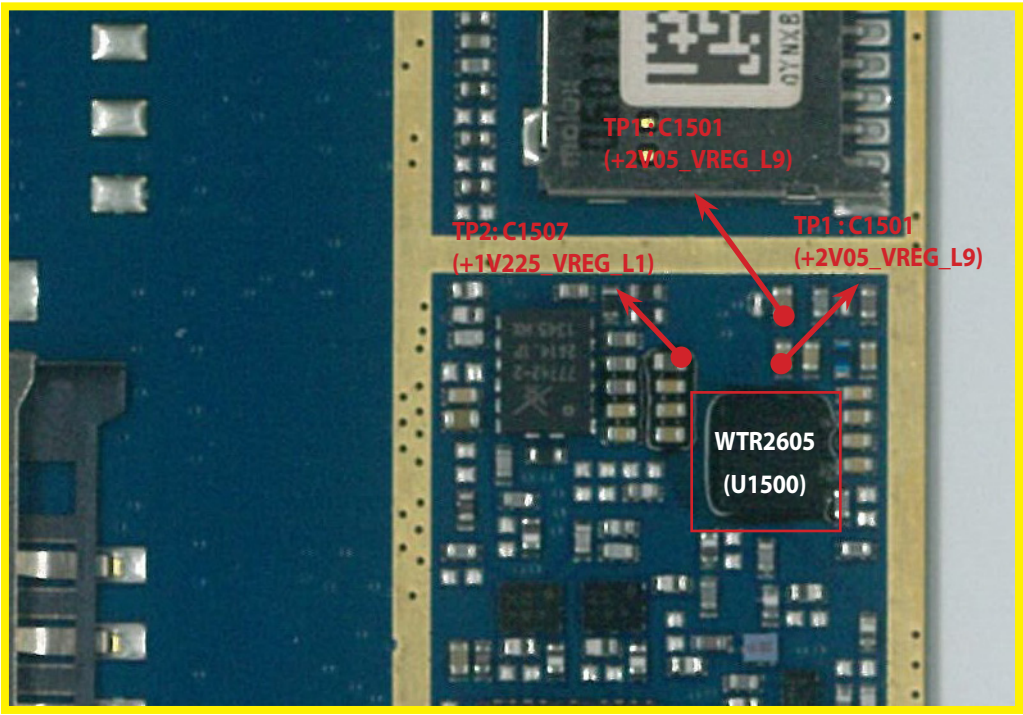

<Main Bot>

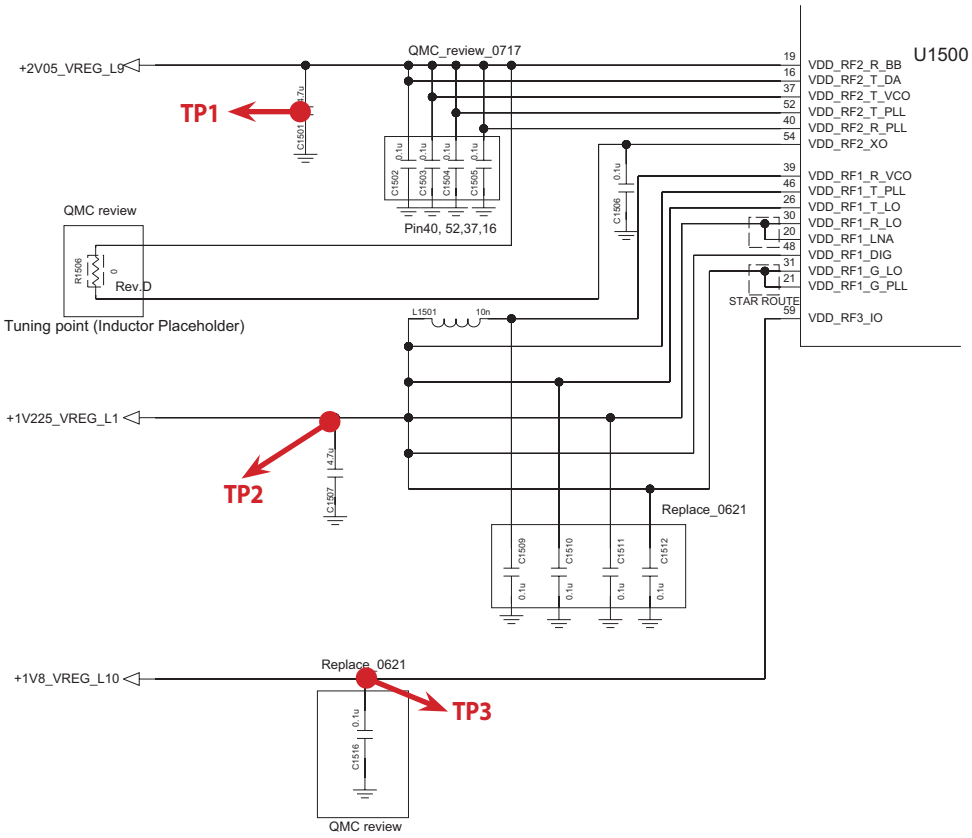

3.4.1.2 Checking XO circuit

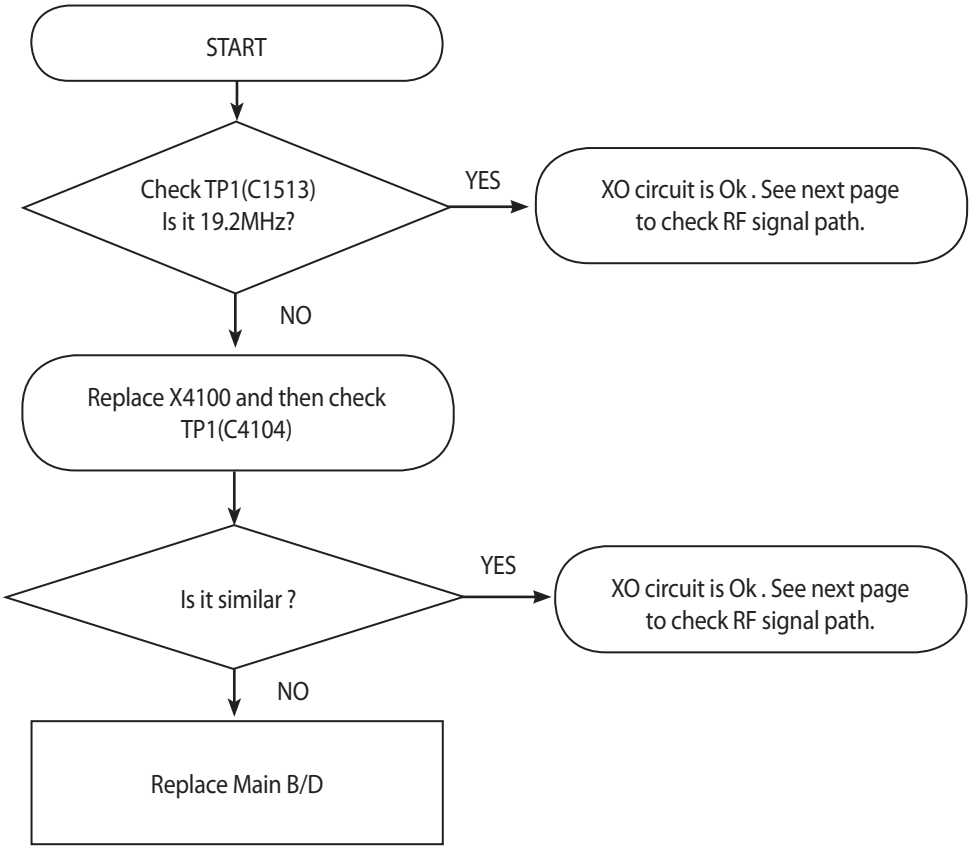

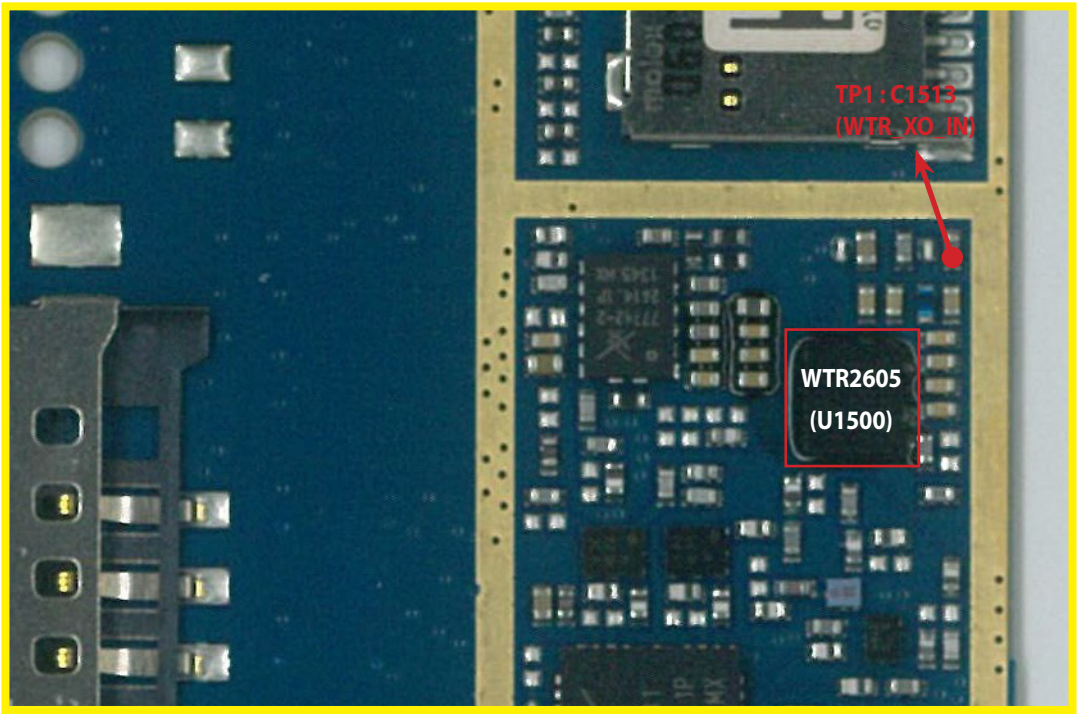

<Main Bot>

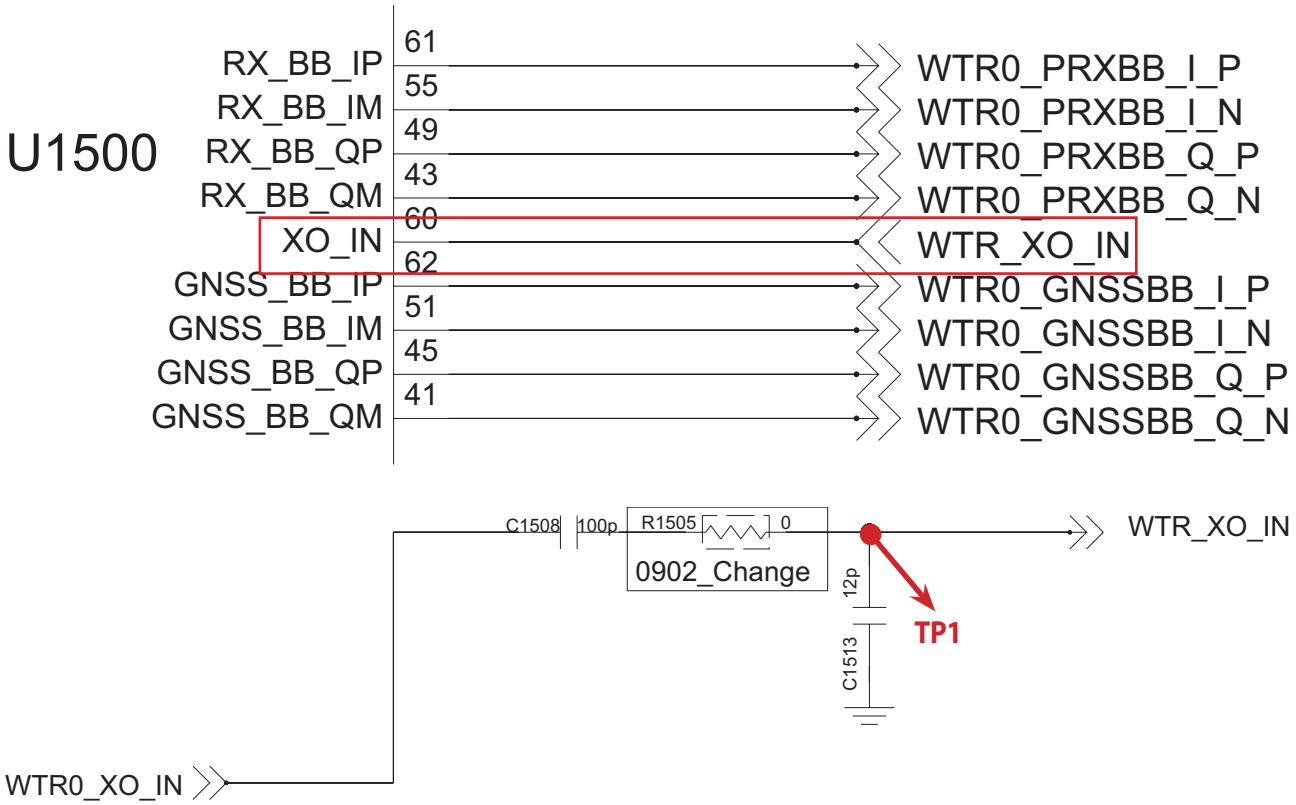

3.4.1.3 Checking RF signal path (TX Module)

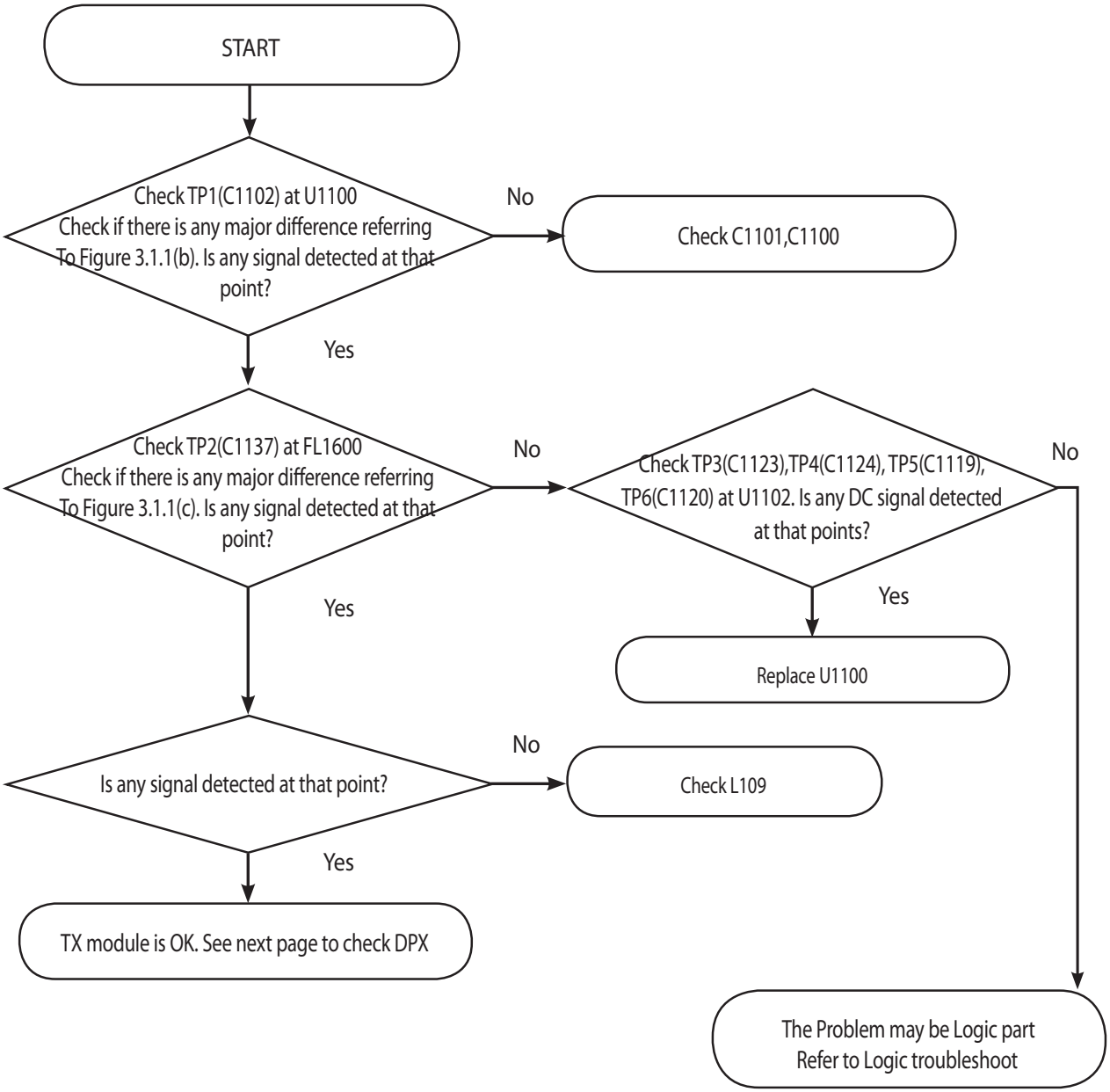

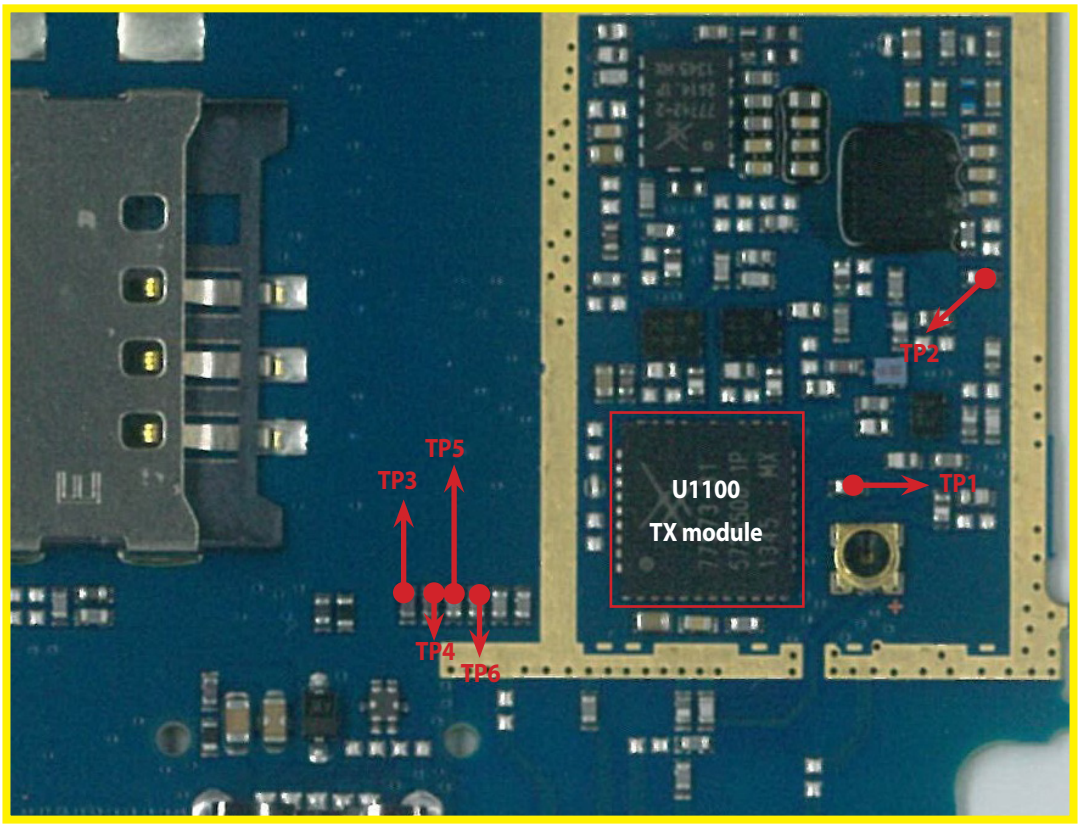

<Main Bot>

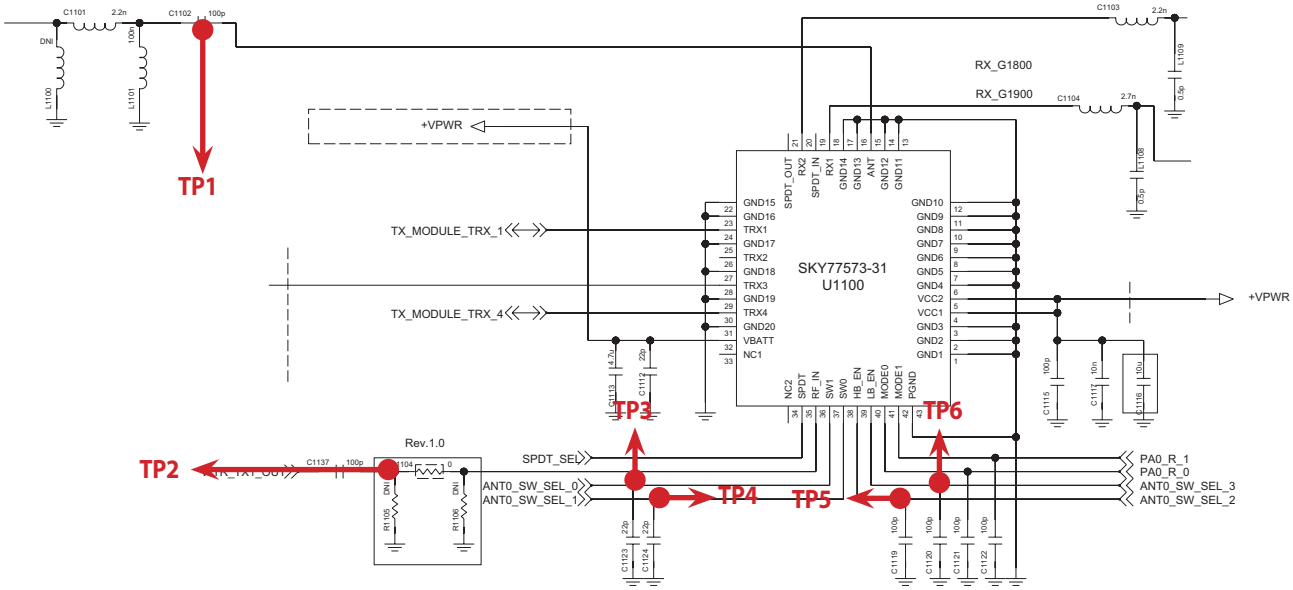

3.4.2 GSM1800/1900_Tx

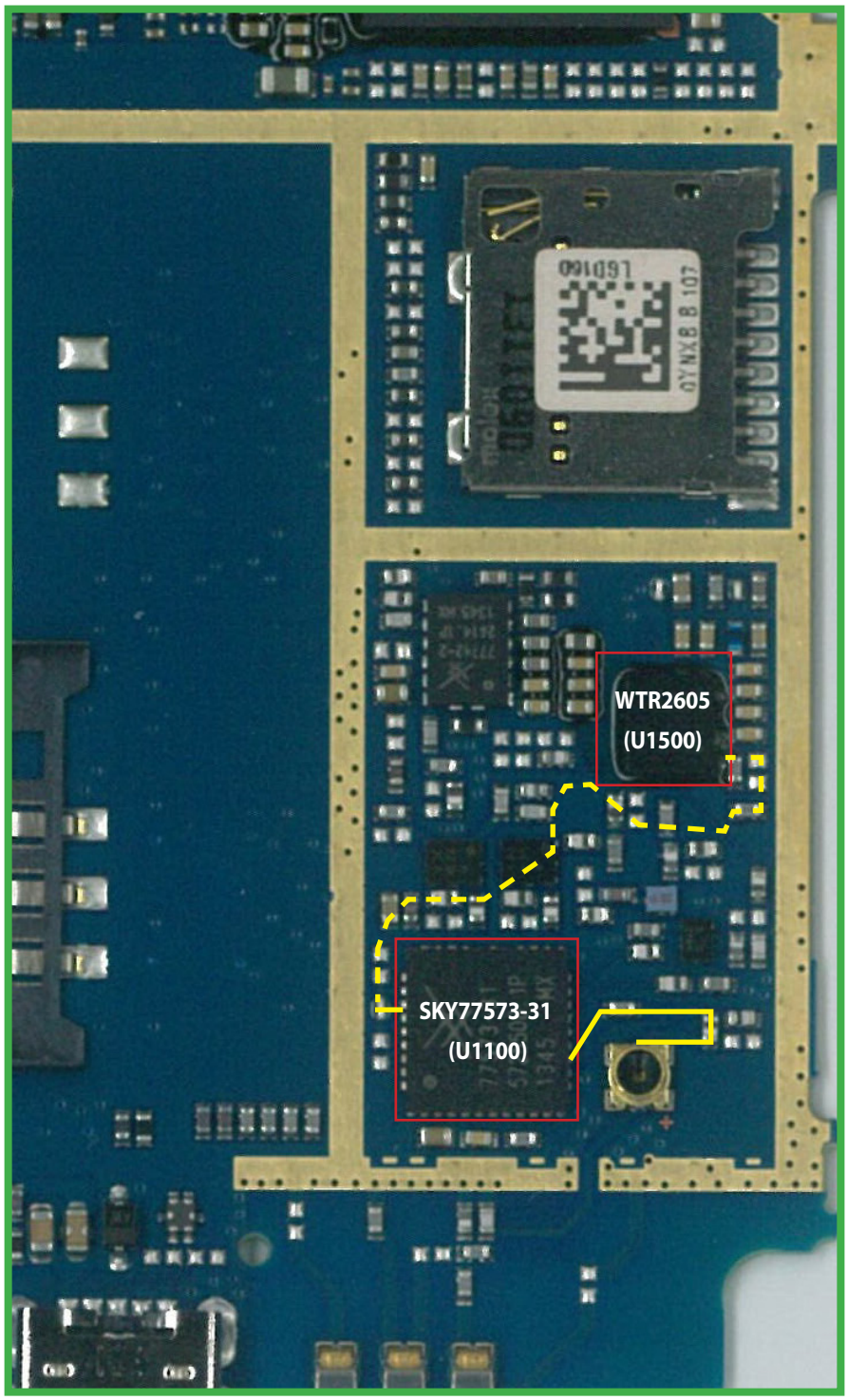

3.4.2.1 Checking DC Power supply circuit

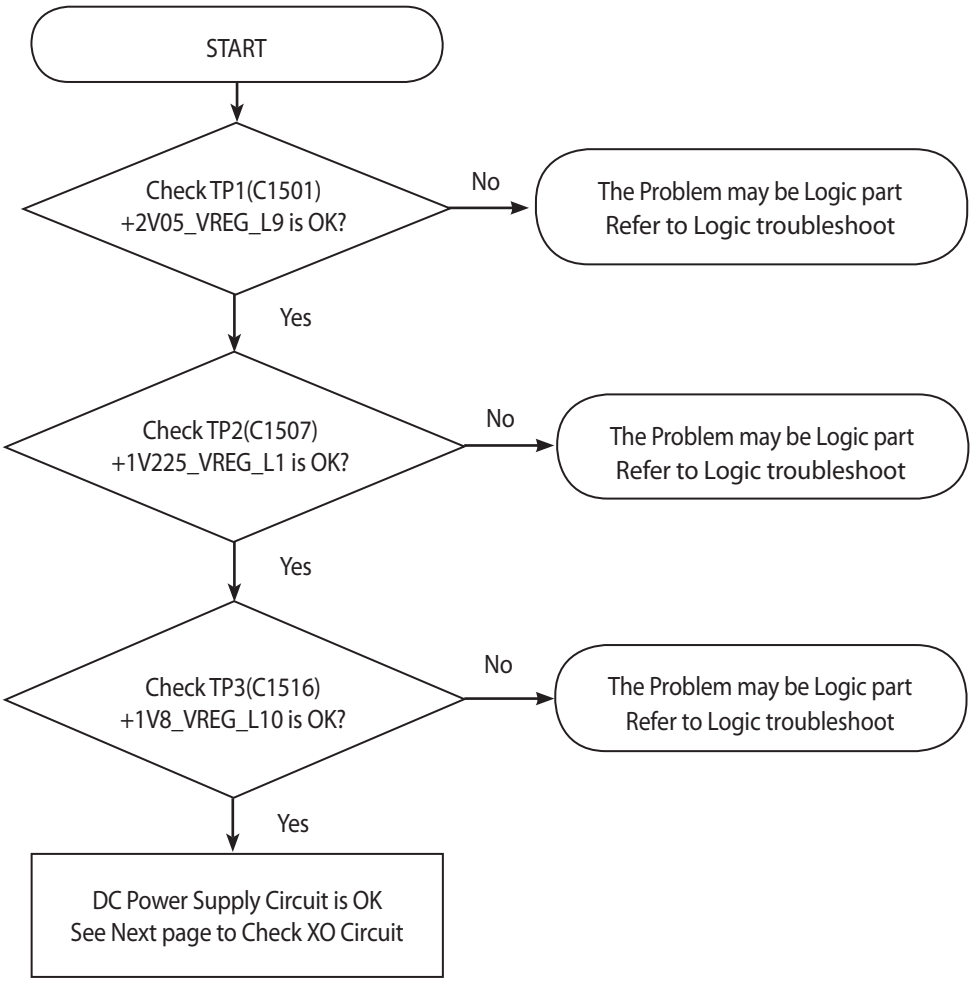

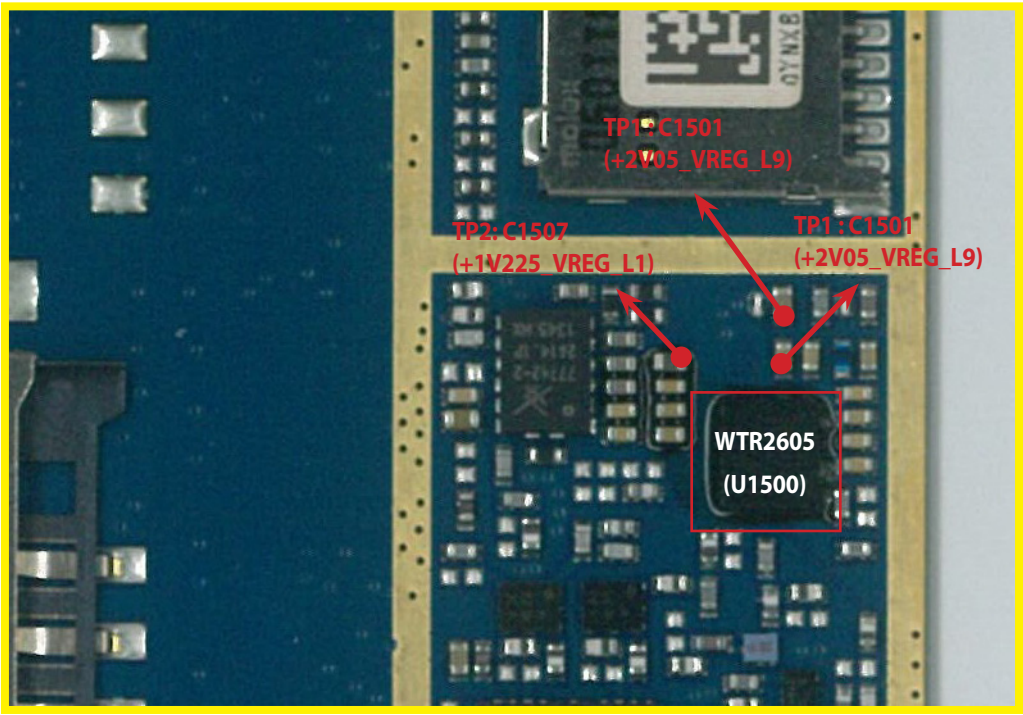

<Main Bot>

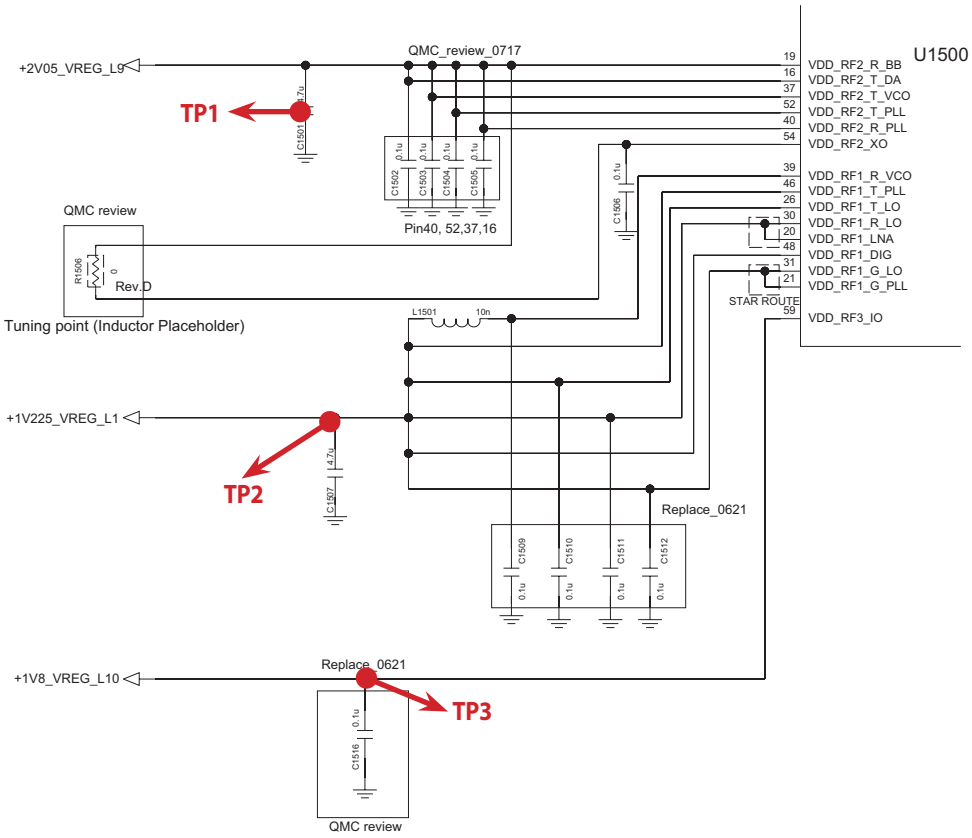

3.4.2.2 Checking XO circuit

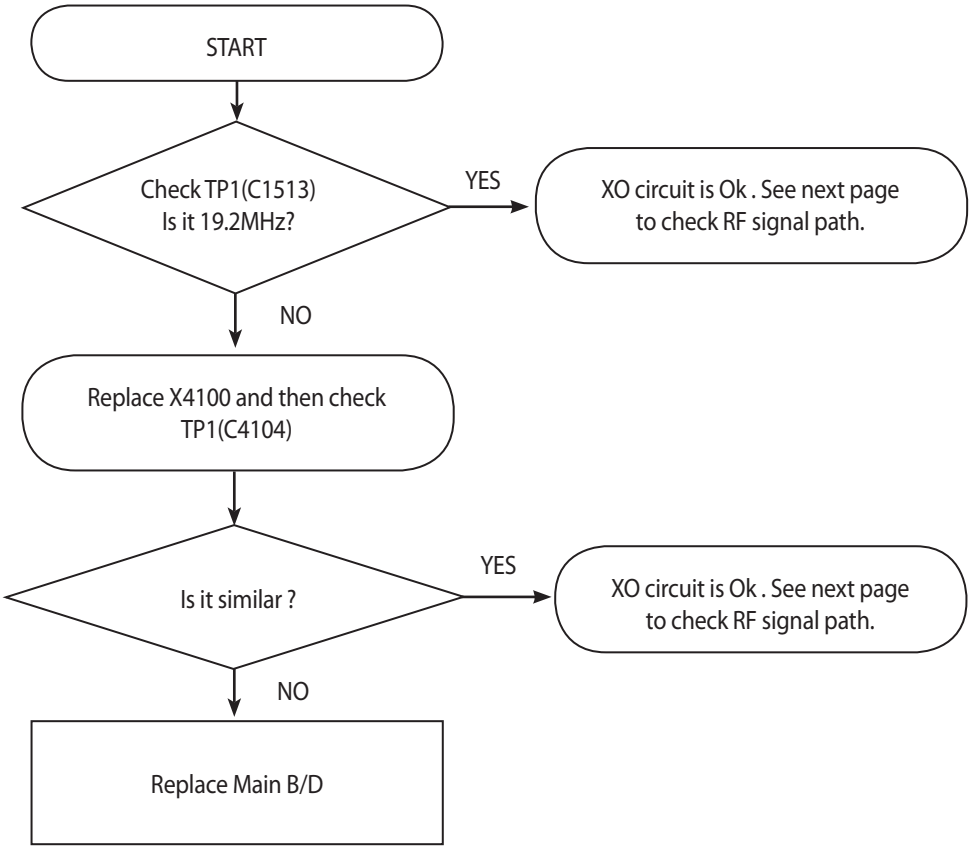

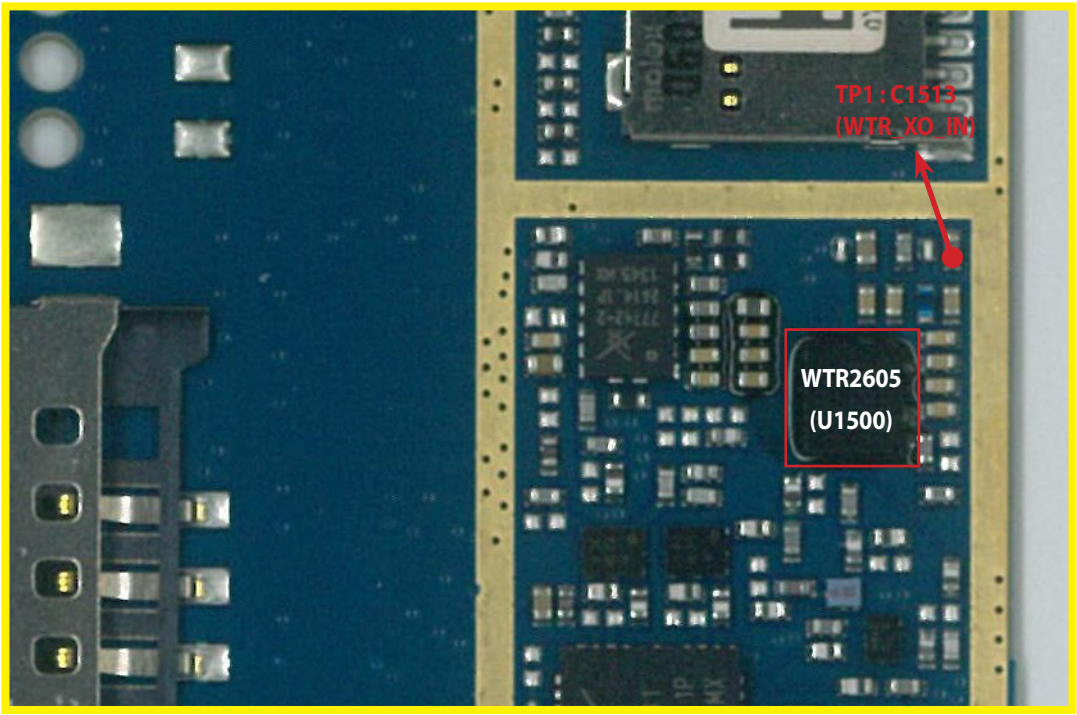

<Main Bot>

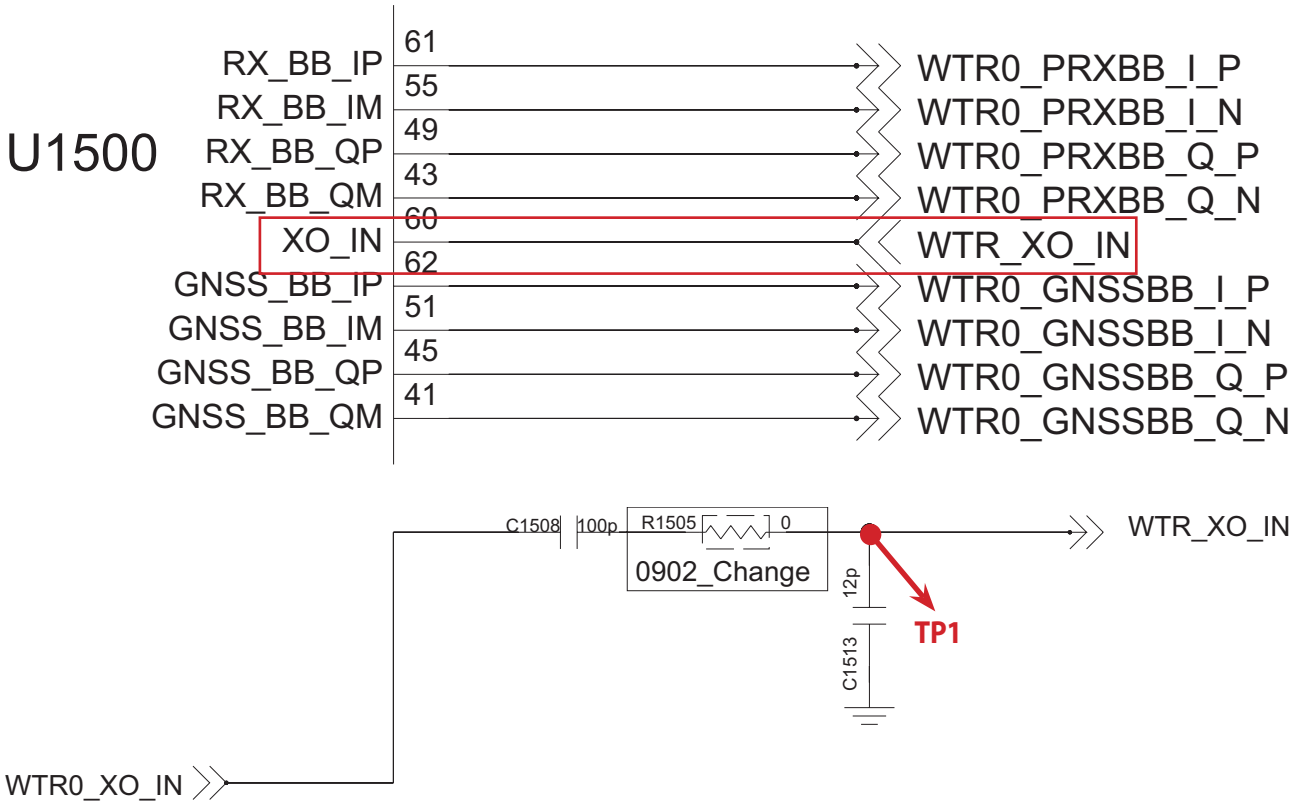

3.4.2.3 Checking RF signal path (TX Module)

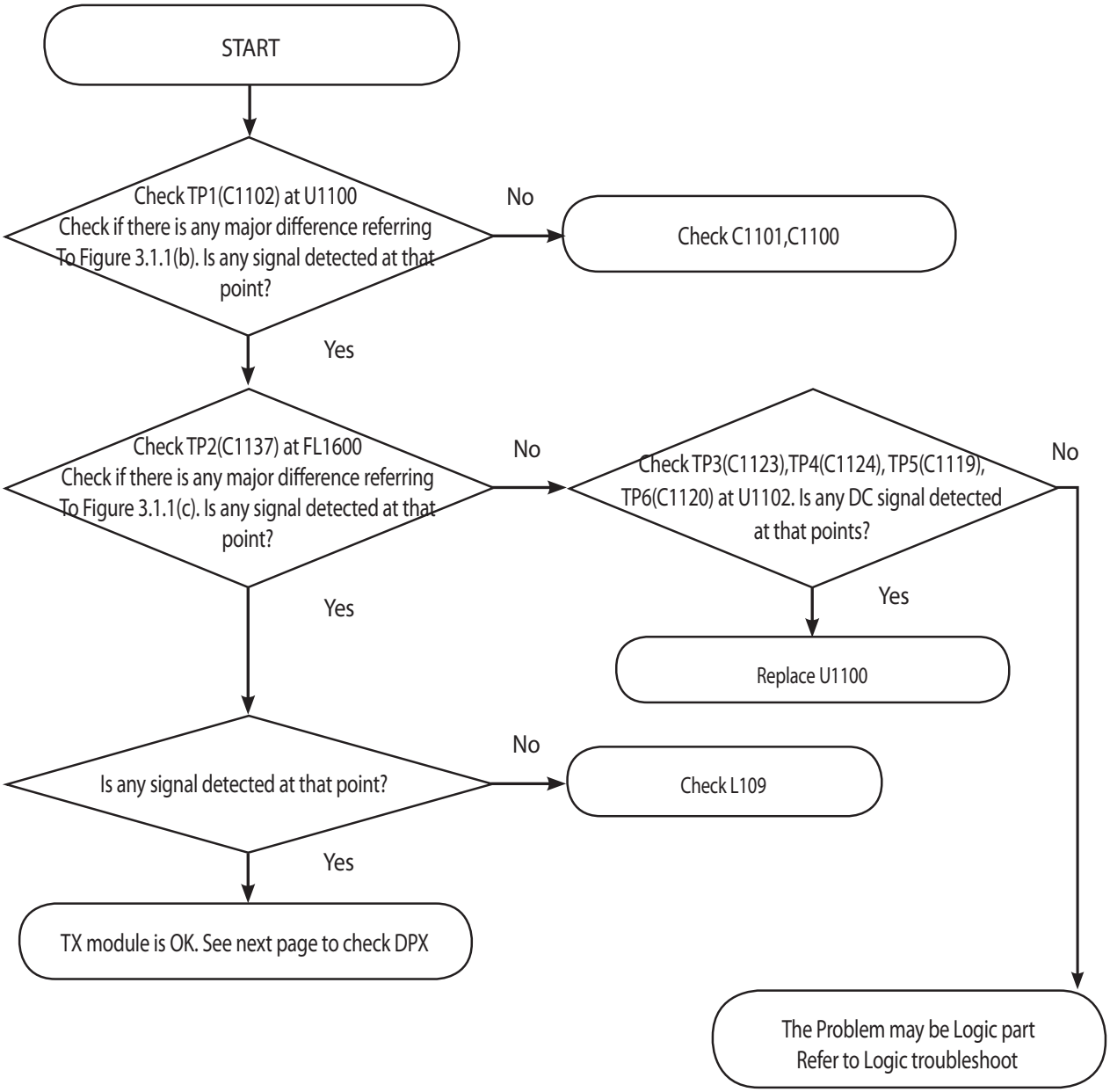

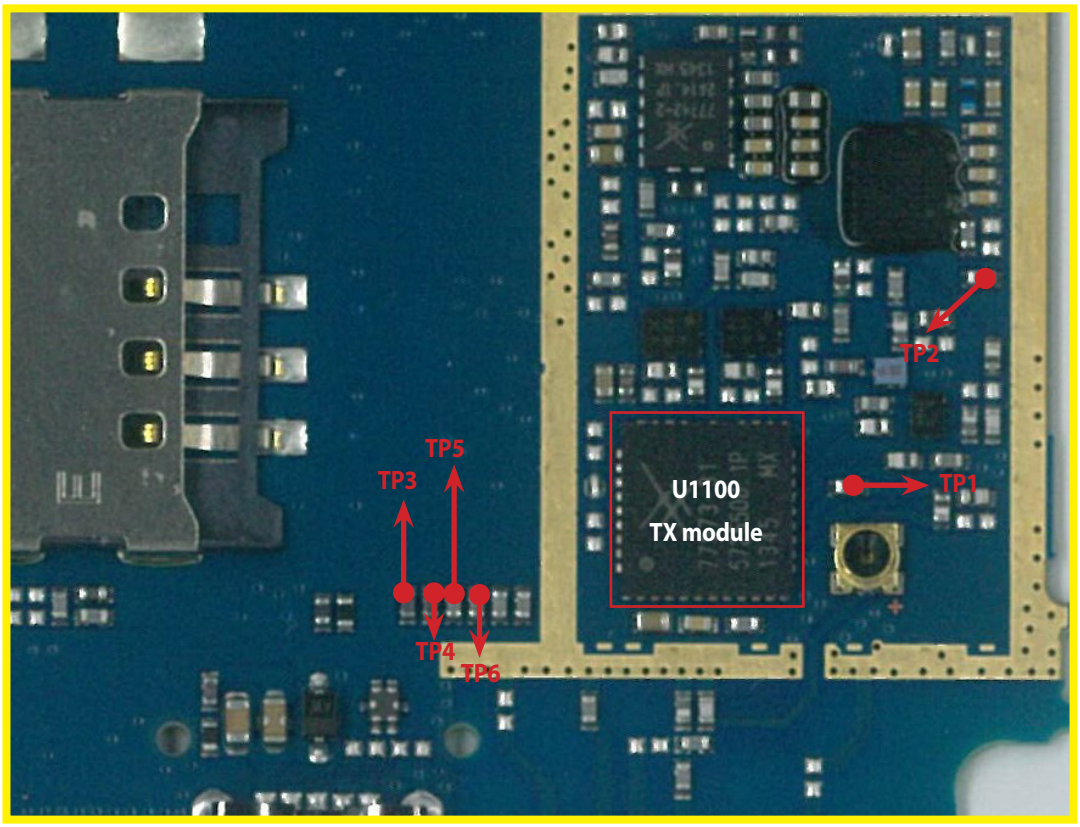

<Main Bot>

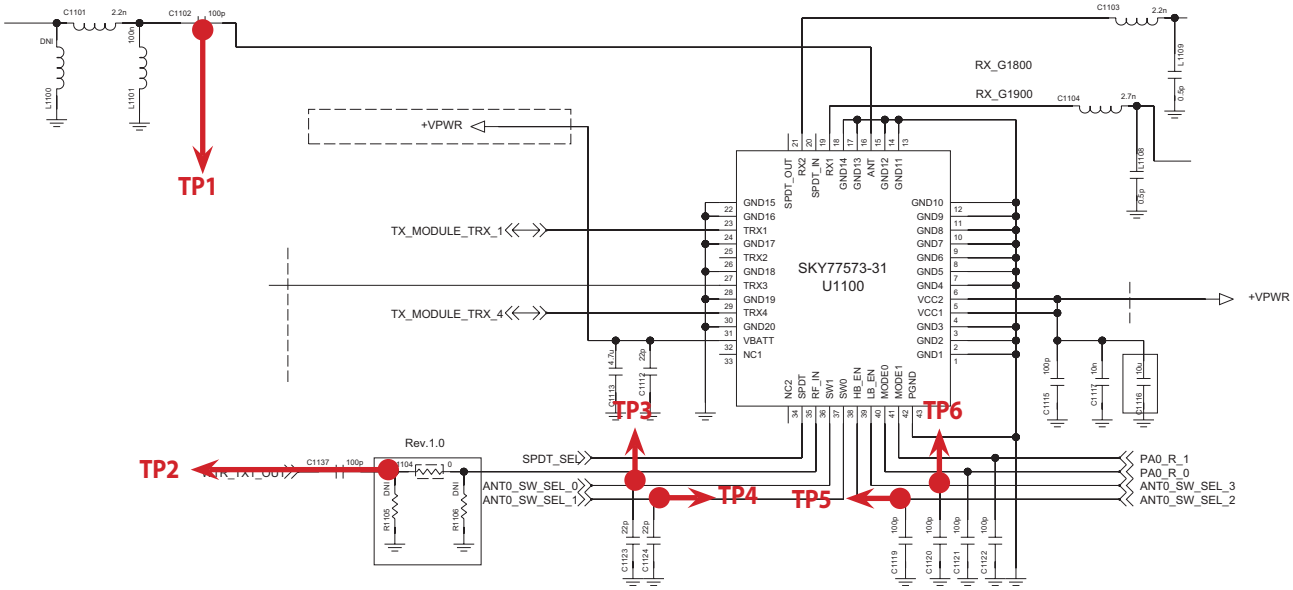

3.5 Power TS

The main power source of D160 is provided by 1 chip which is PM8110 Power ON sequence of D160 is

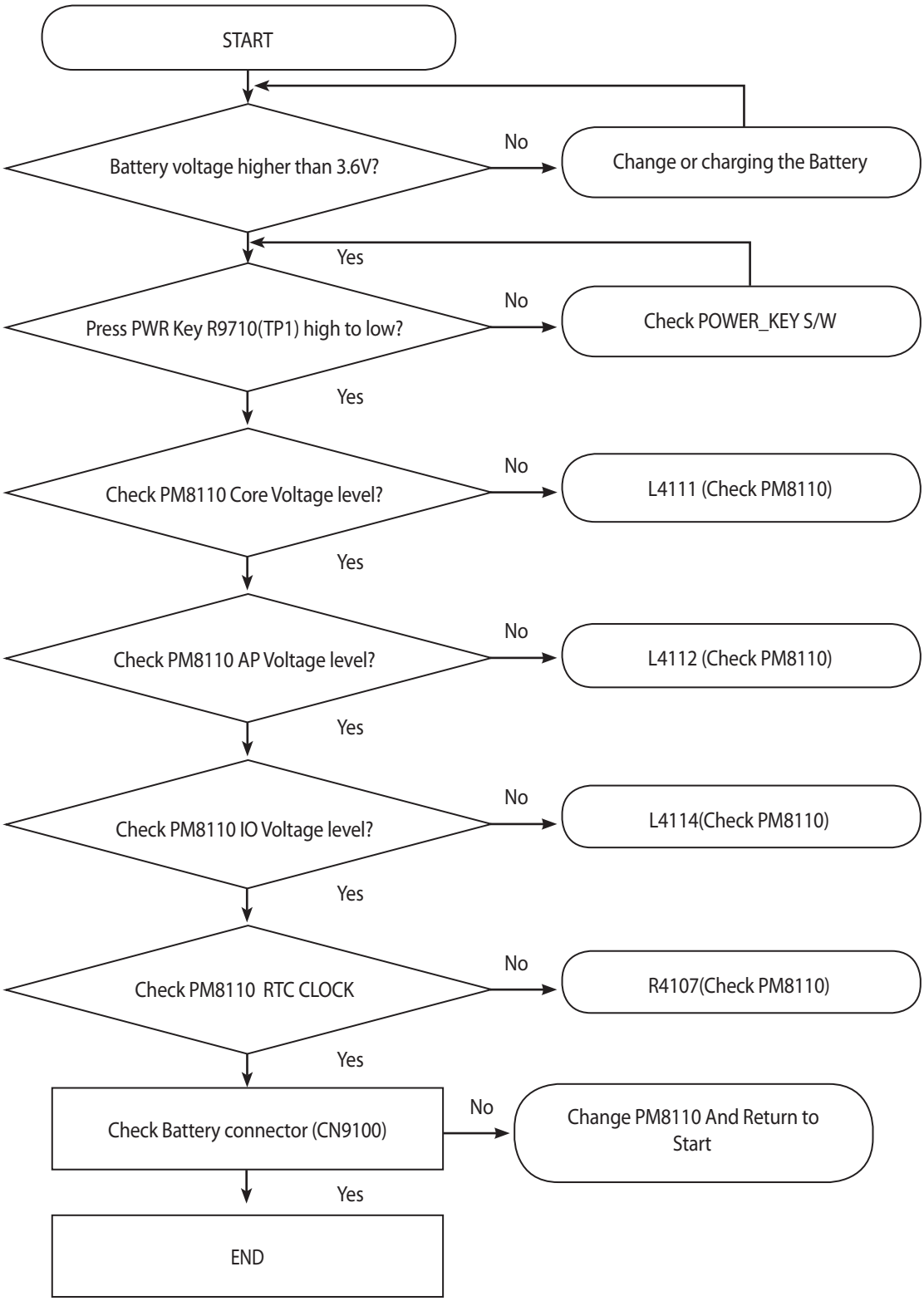

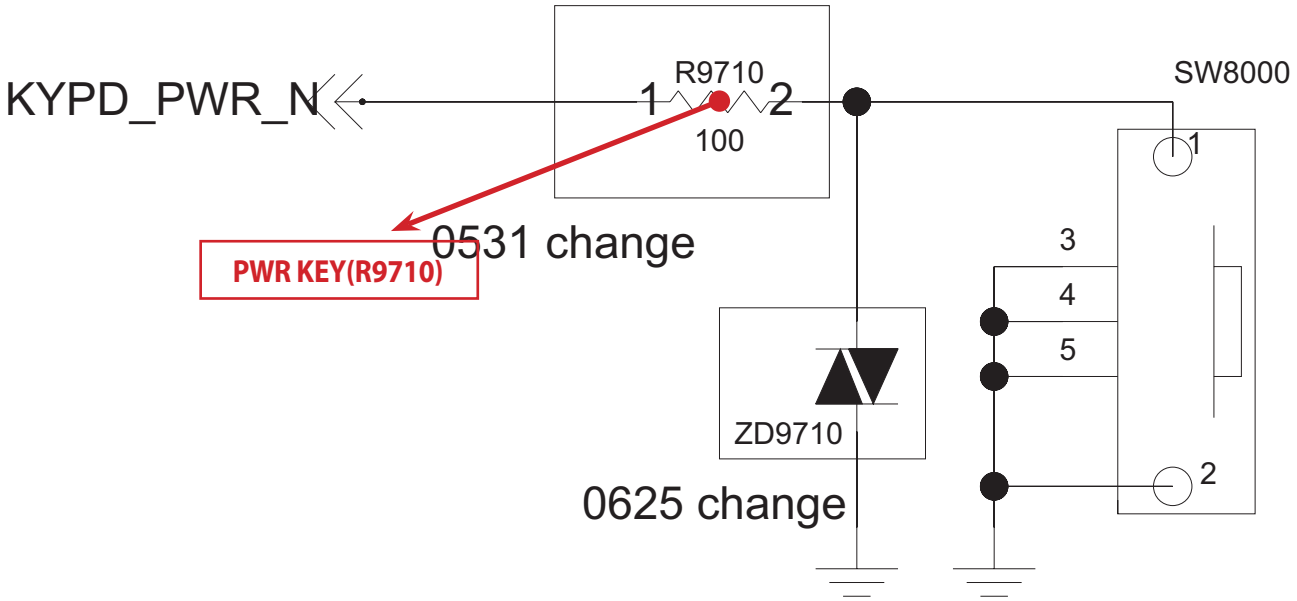

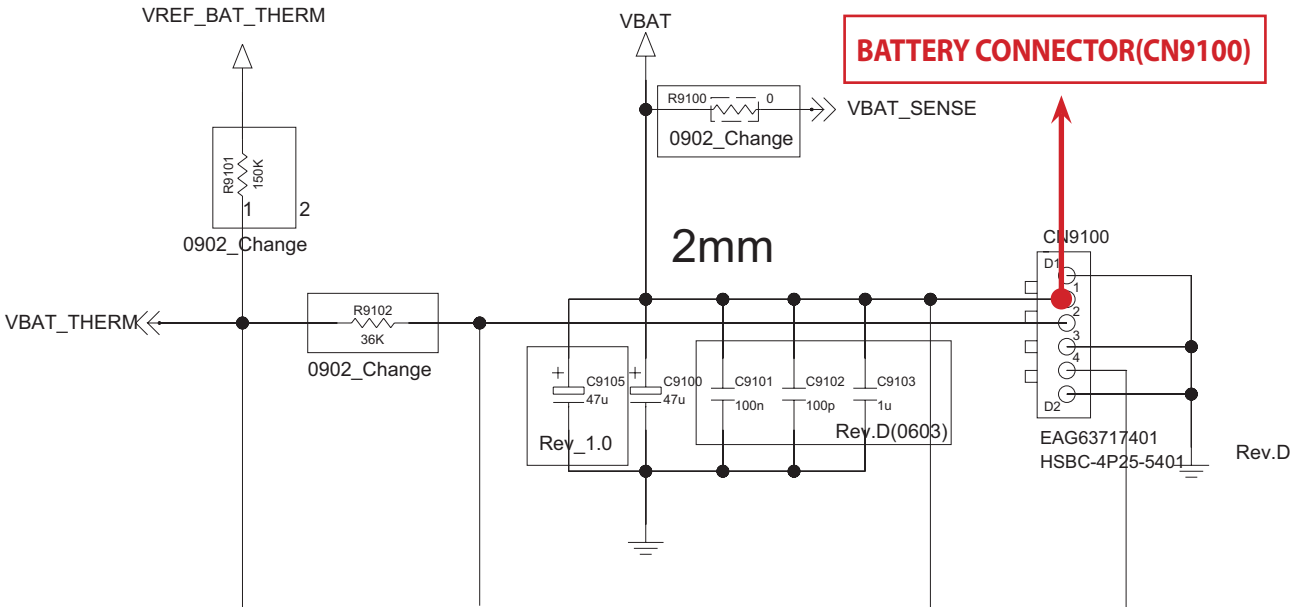

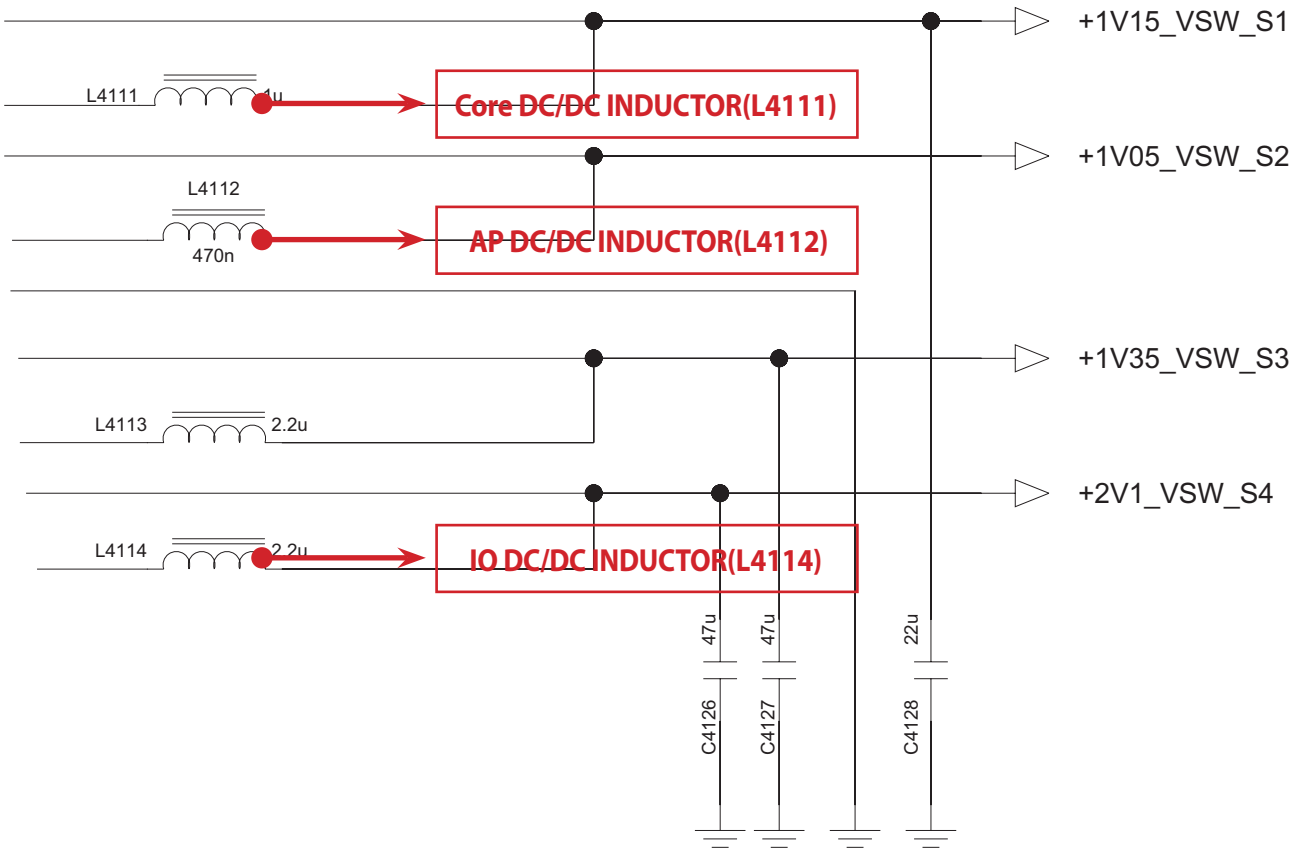

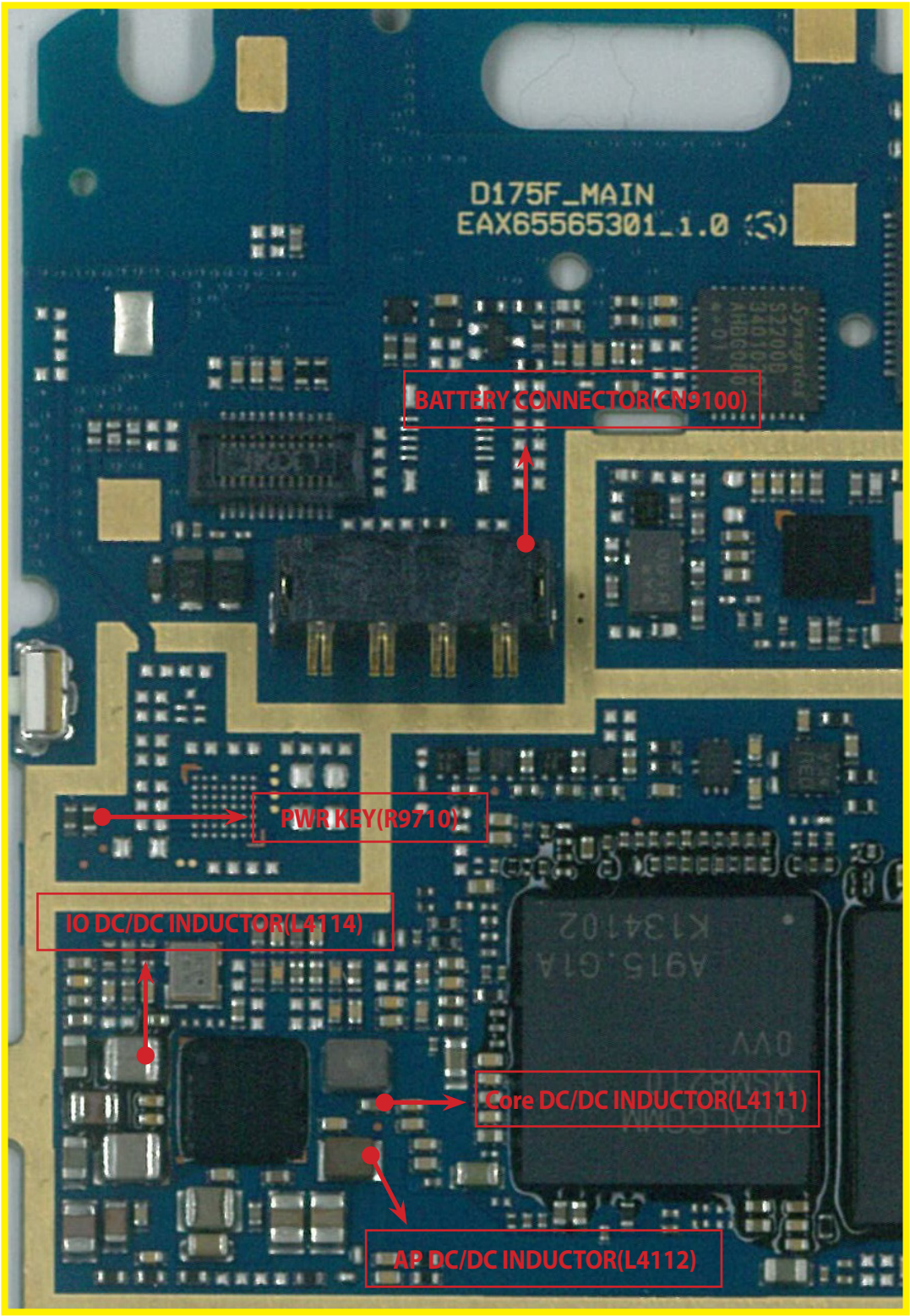

<Main Bot>

3.6 Charging

D160 uses PMIC(liner Charger) for charging control. The PMIC circuit includes the charging pass transistor detects the VDD and VBAT voltages, and its control driver. The PMIC maximum charging current is set around 700mA.

Charging Procedure

- Supply the VCHG use a TA or u-USB cable
- The PMIC control the charging current
- Charging current flows into the main battery

Troubleshooting Check Point

- Connection of the TA or u-USB cable
- Main battery

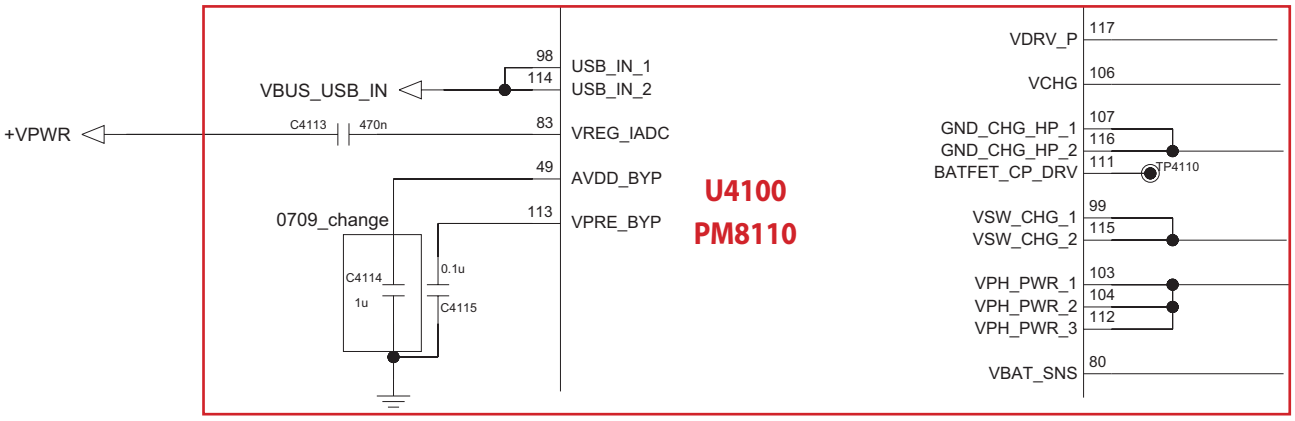

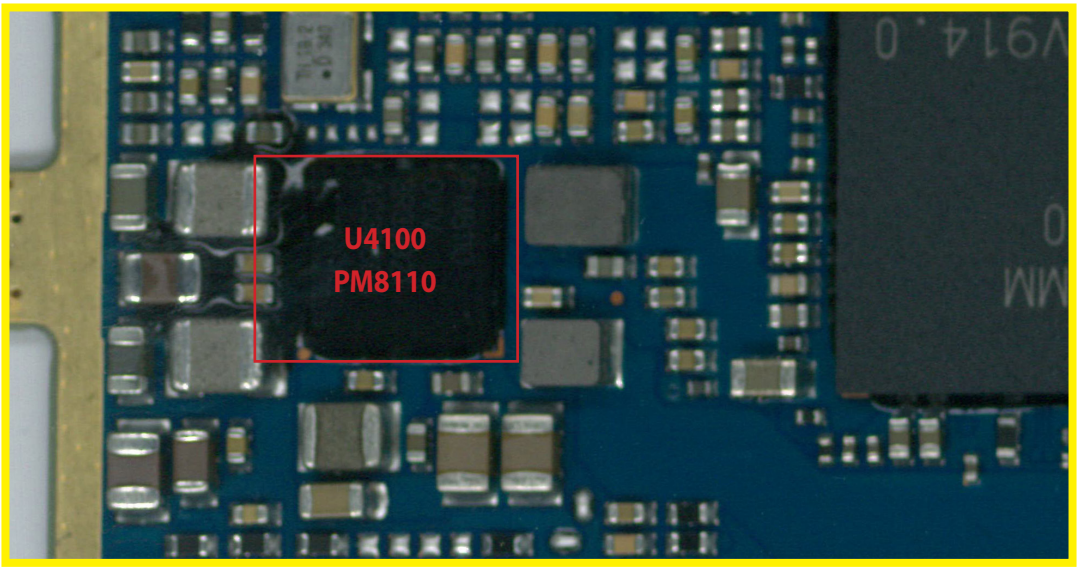

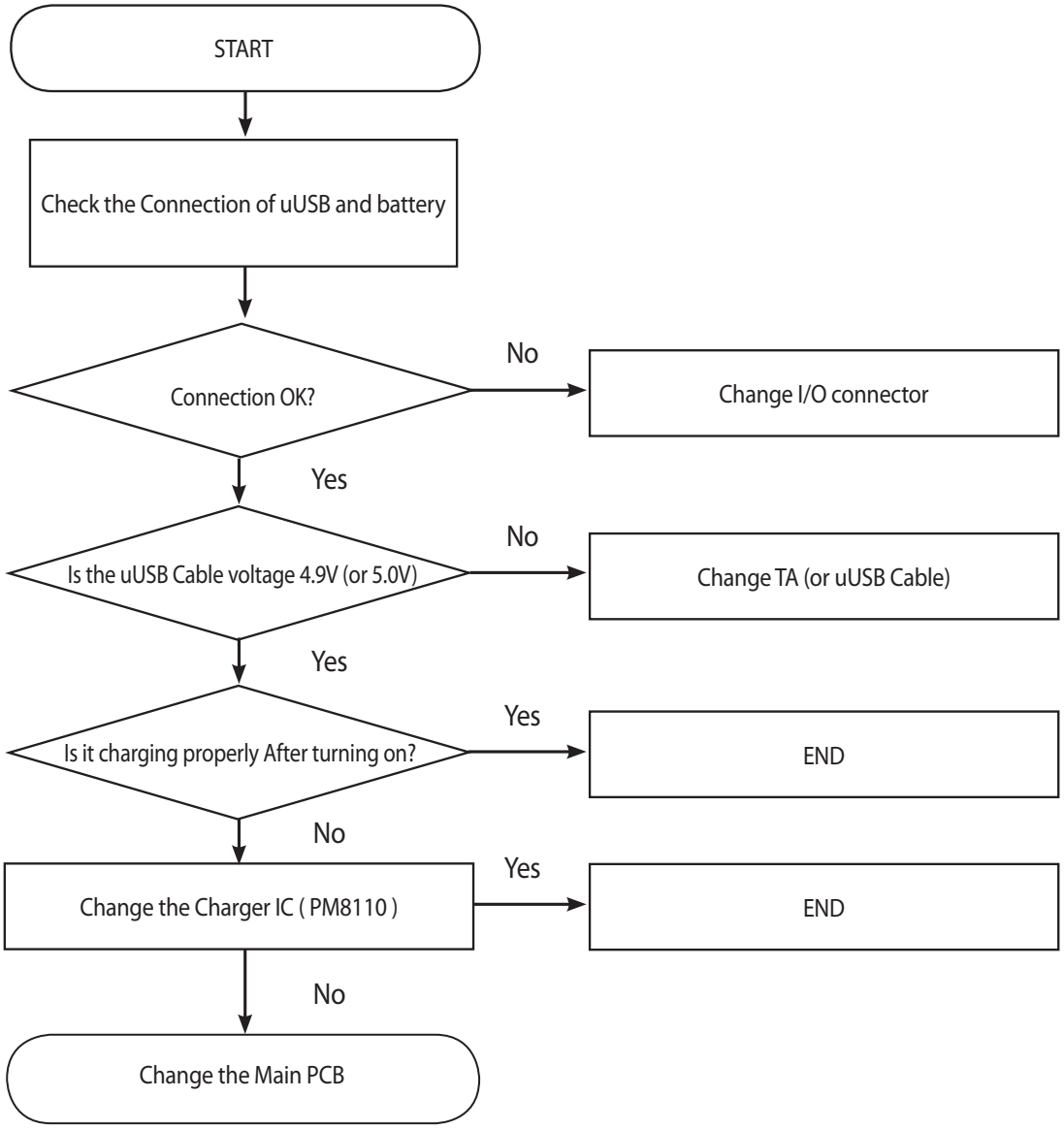

3.7 USB TS

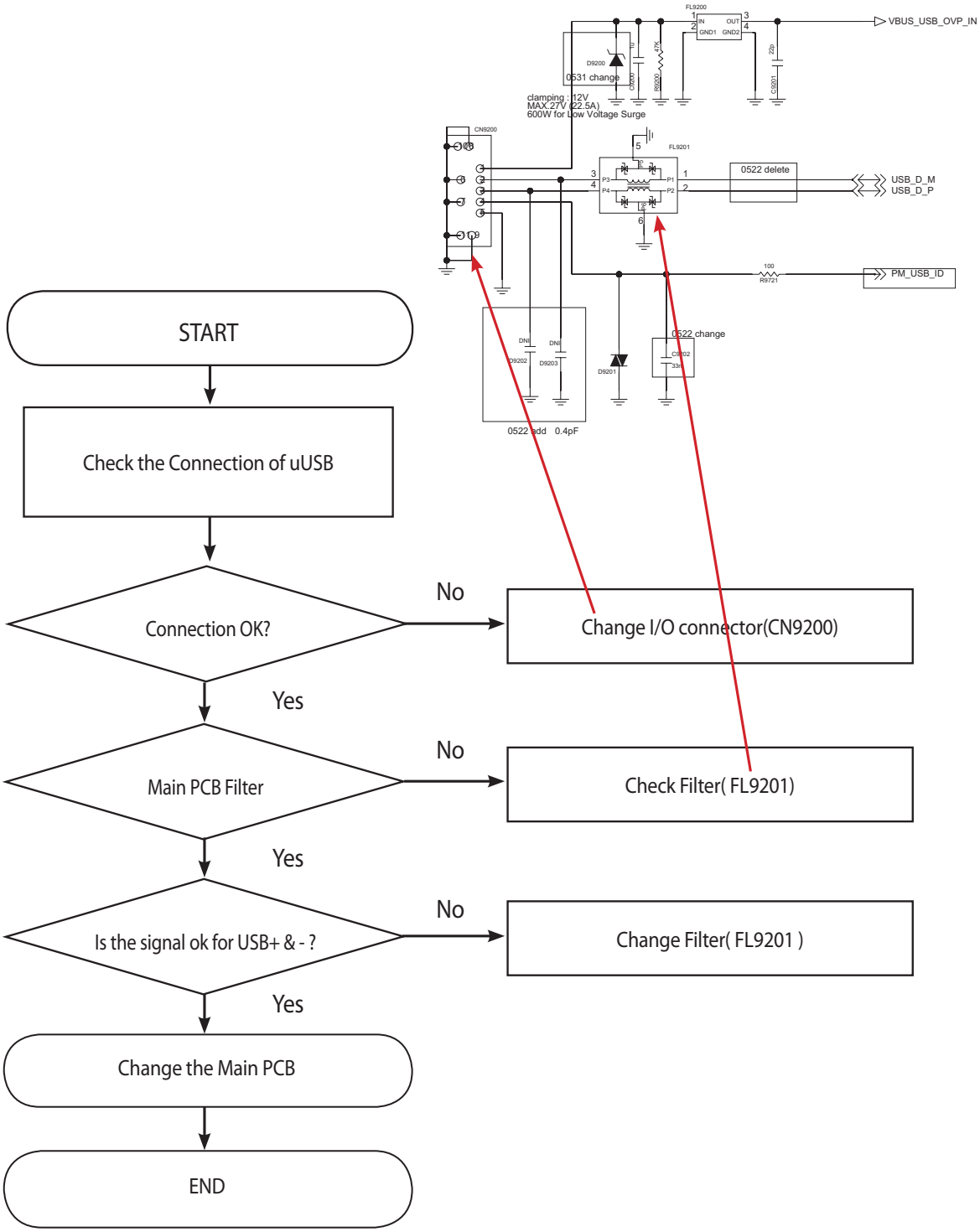

3.8 Audio TS

3.8.1 Overview

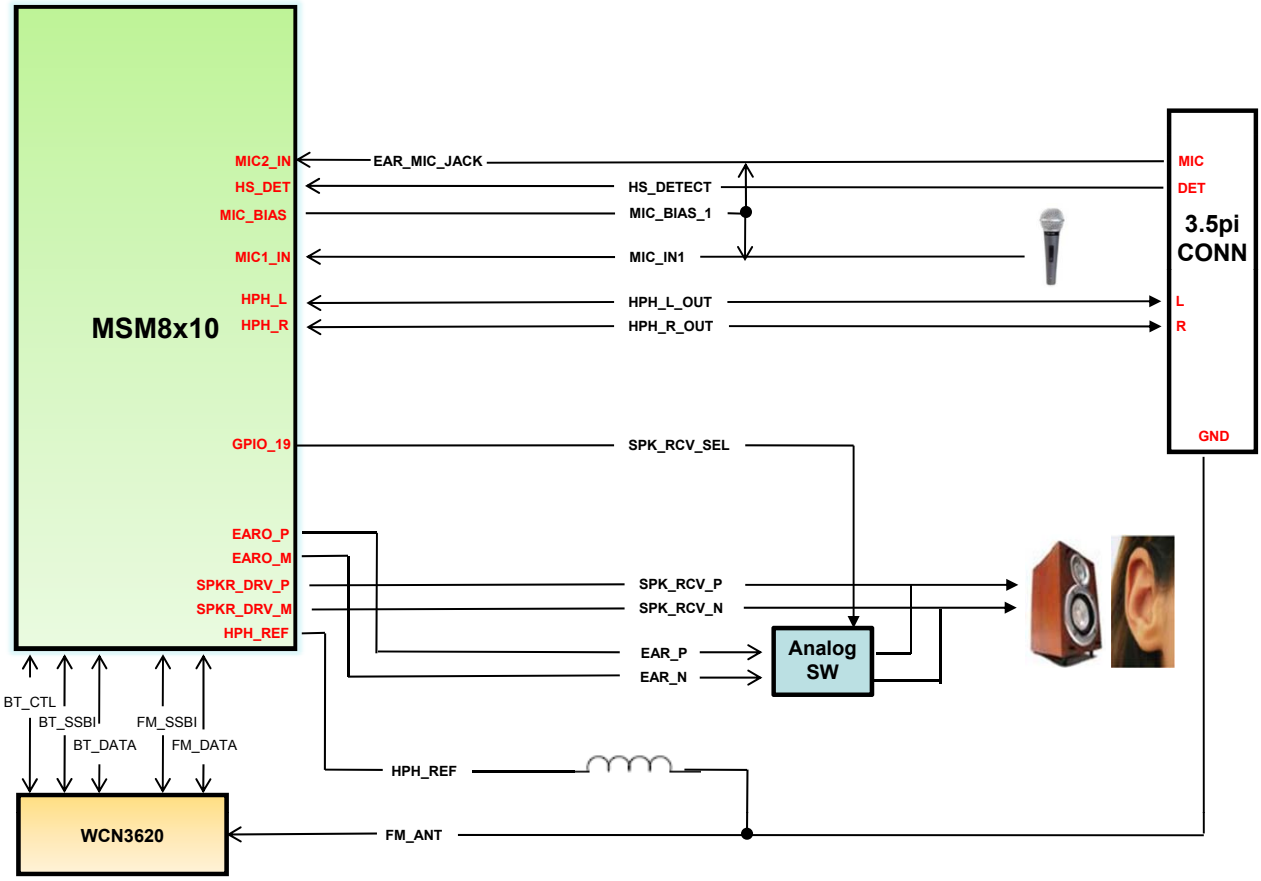

3.8.2 Speaker & Receiver Trouble Shooting

It's trouble shooting guide for no sound case.

Speaker & Receiver control signals are generate by MSM8210 (U2100)If low level volume or breaking the sound, change speaker module

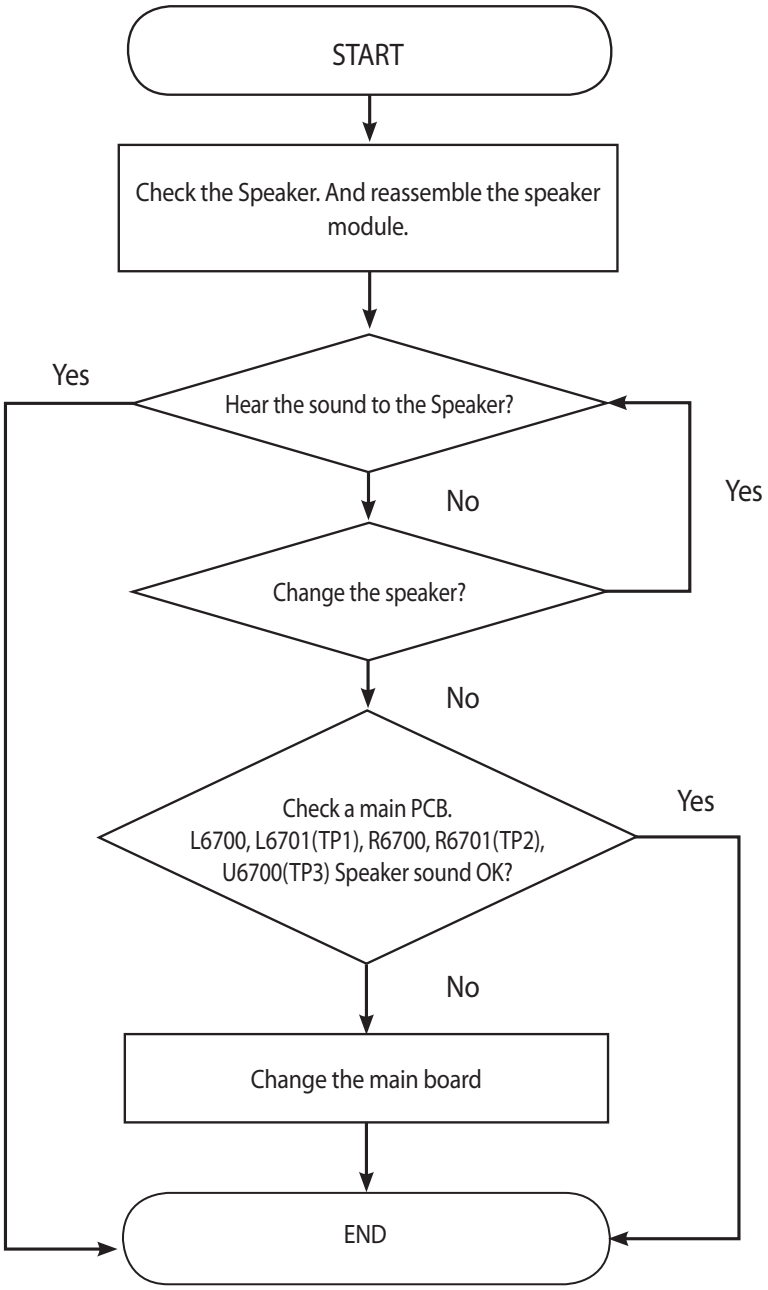

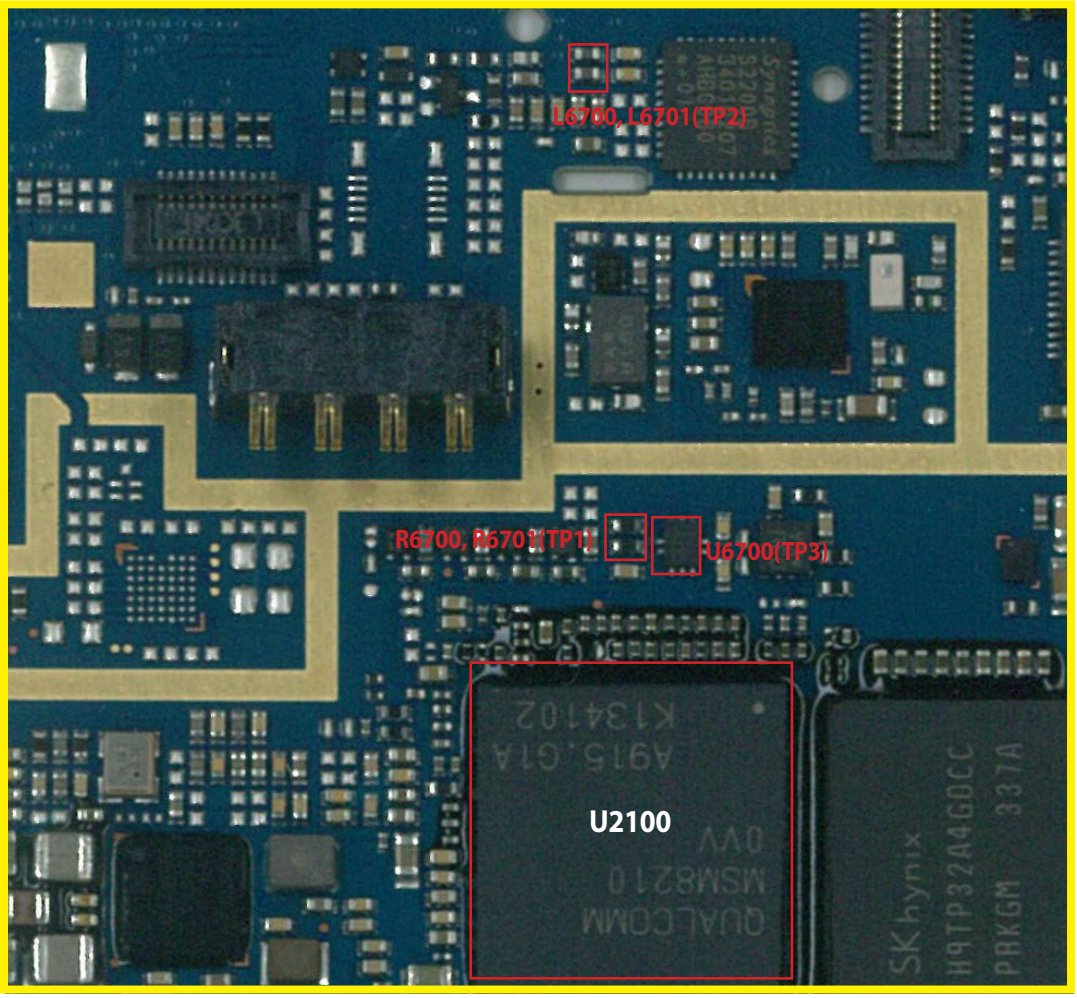

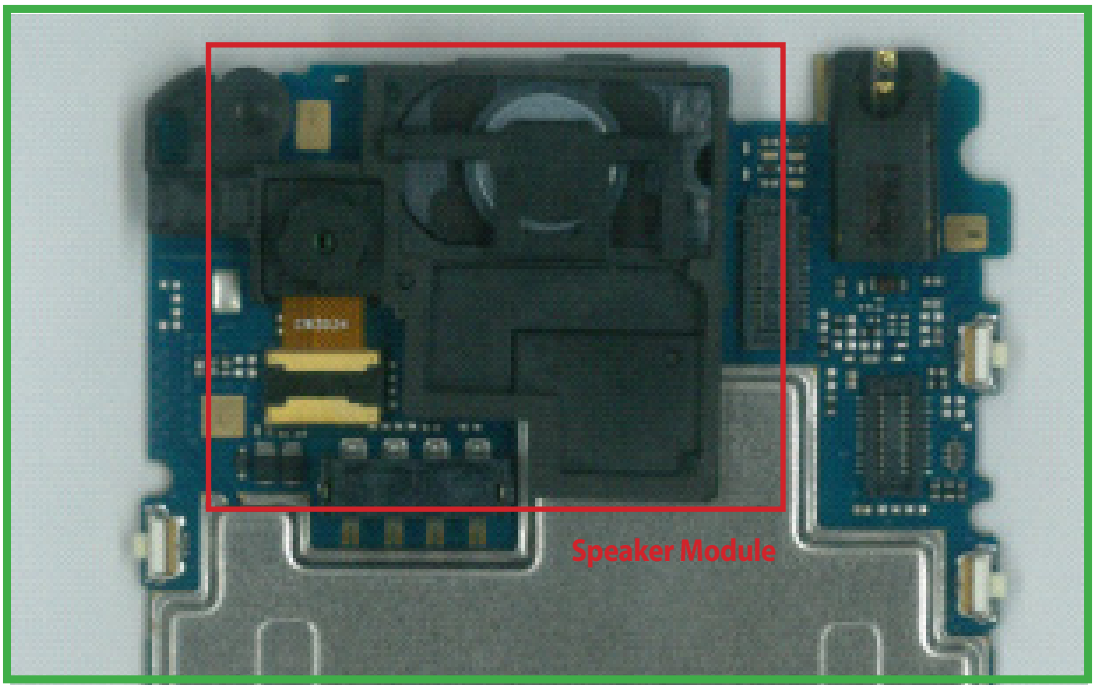

Analog S/W

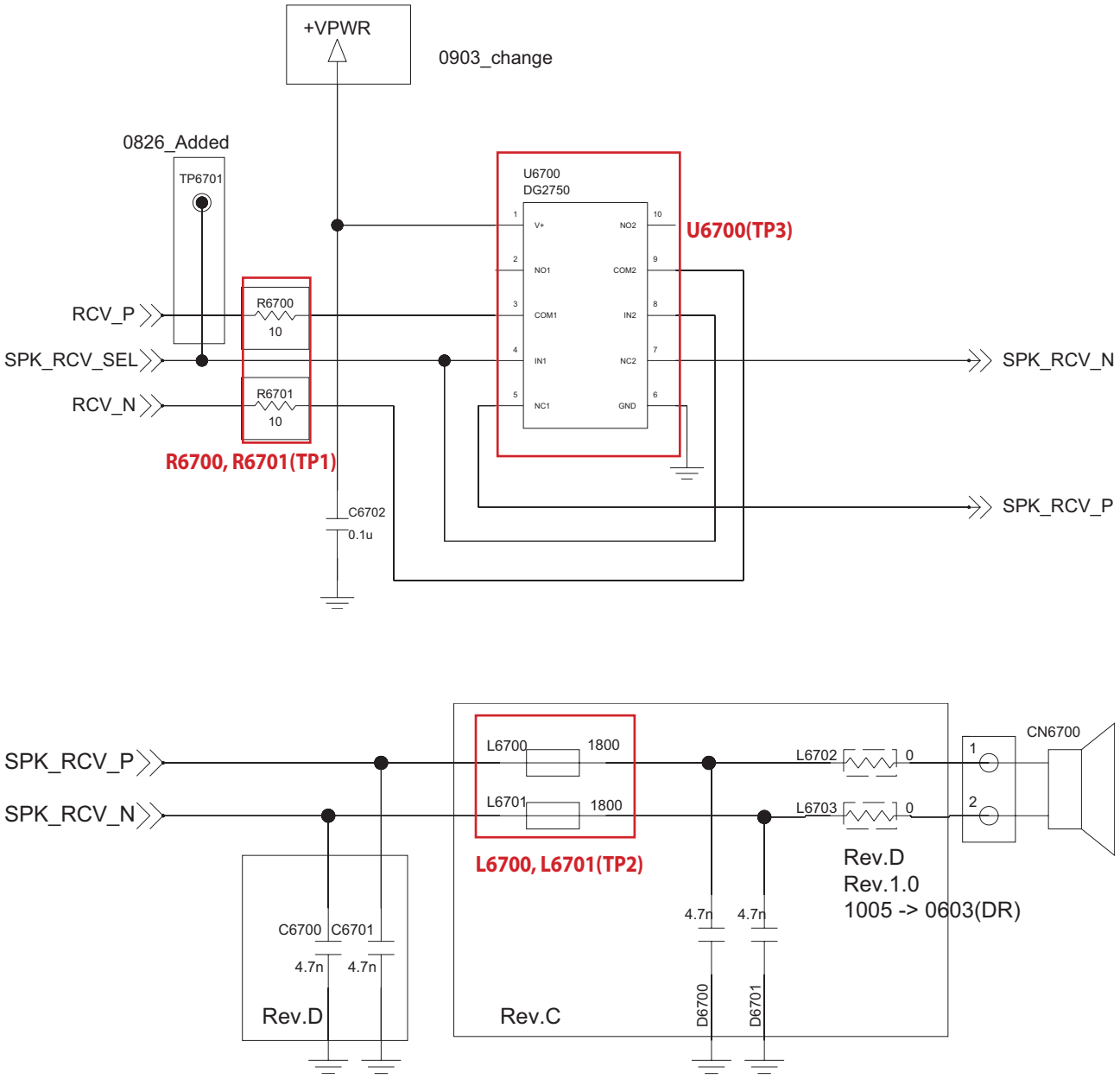

Main PCB

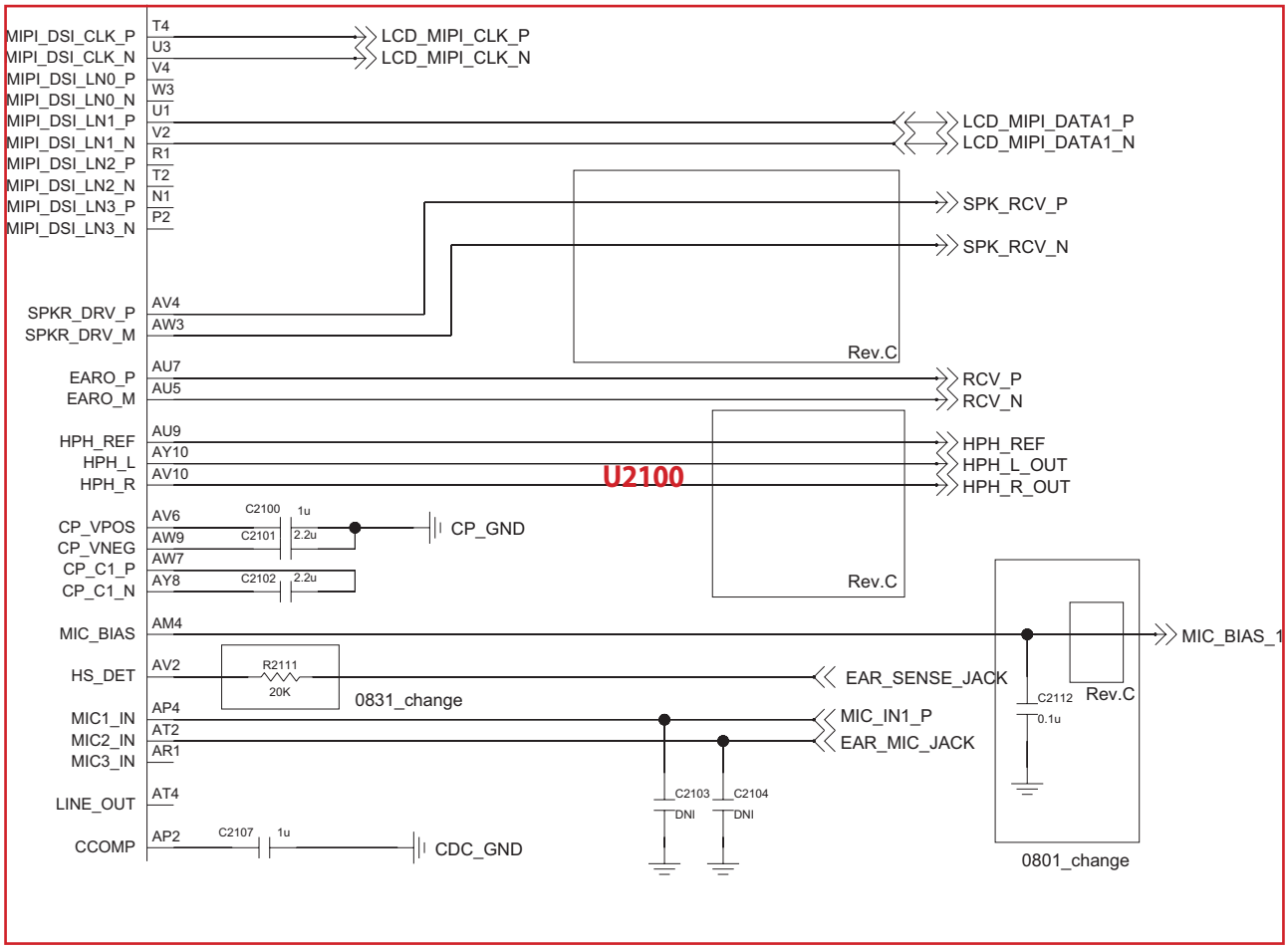

3.8.3 Main Mic Trouble Shooting

It's operating voice call(including speaker phone), voice recording and camcorder recording.

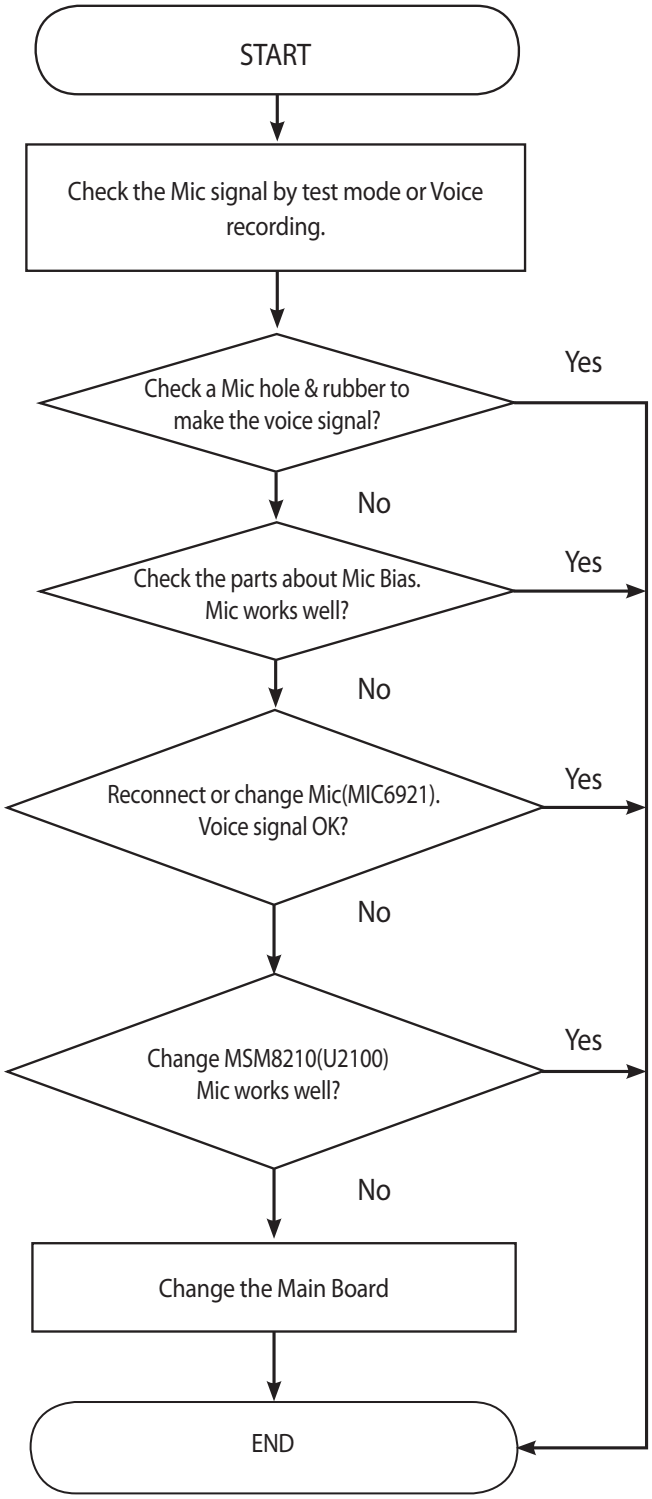

Check Main Mic hole.

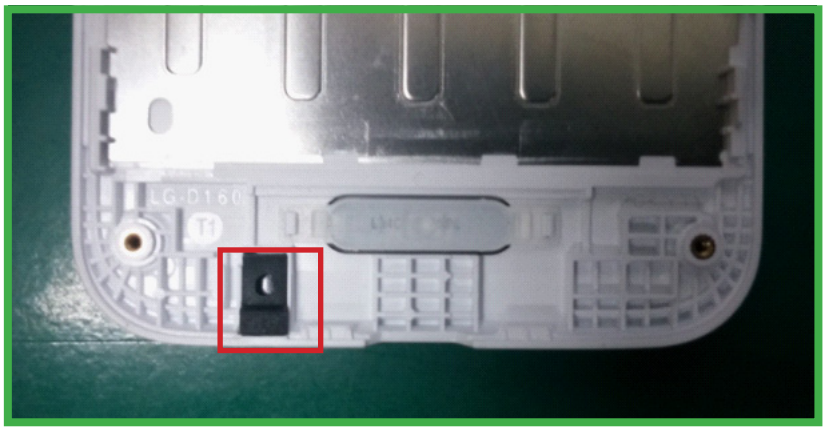

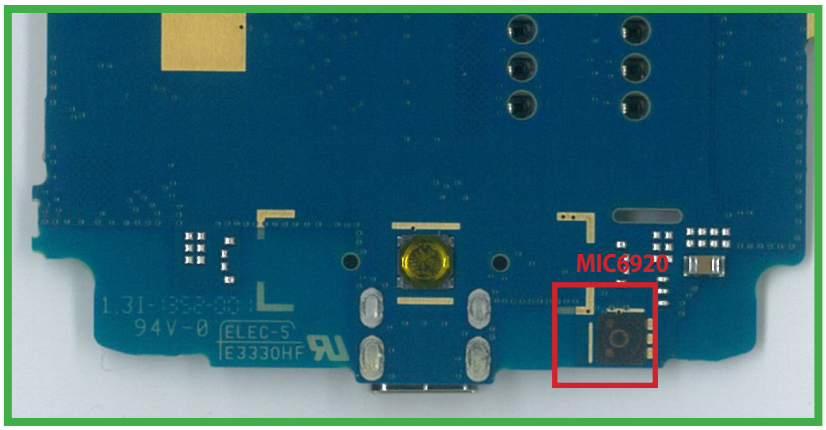

Check FB6920 and MIC_Bias level (R6622)

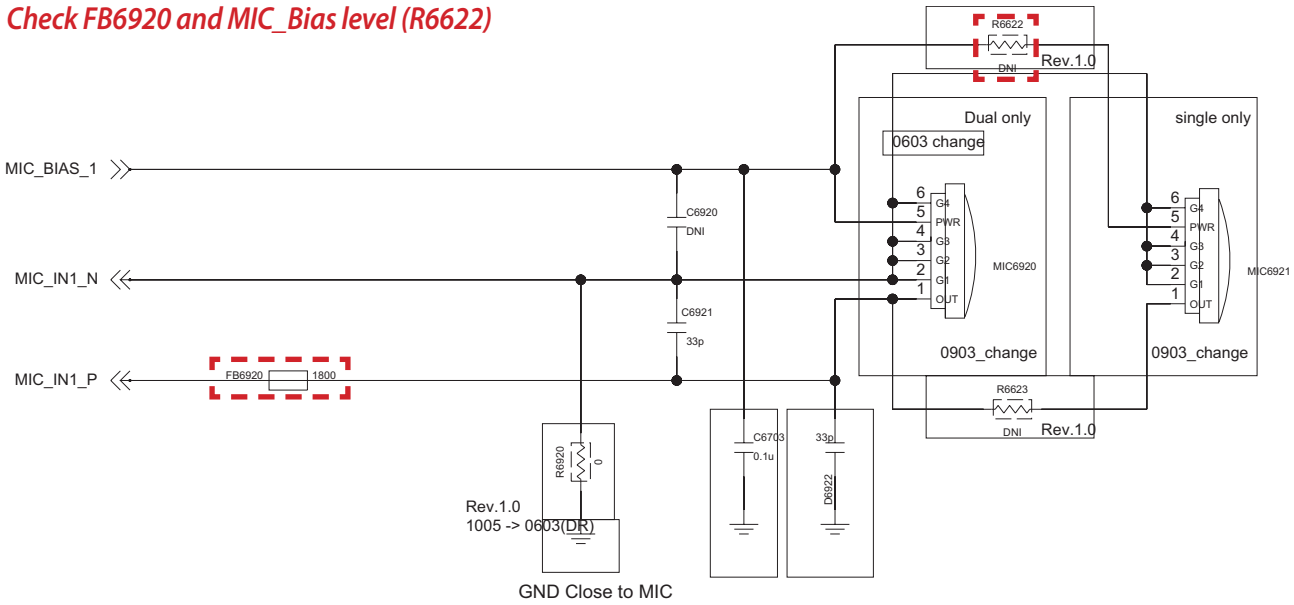

3.8.4 Ear-Mic Trouble Shooting

Ear MIC control signals are generate by MSM8210(U2100)

Case A. Disable detected headset insert.

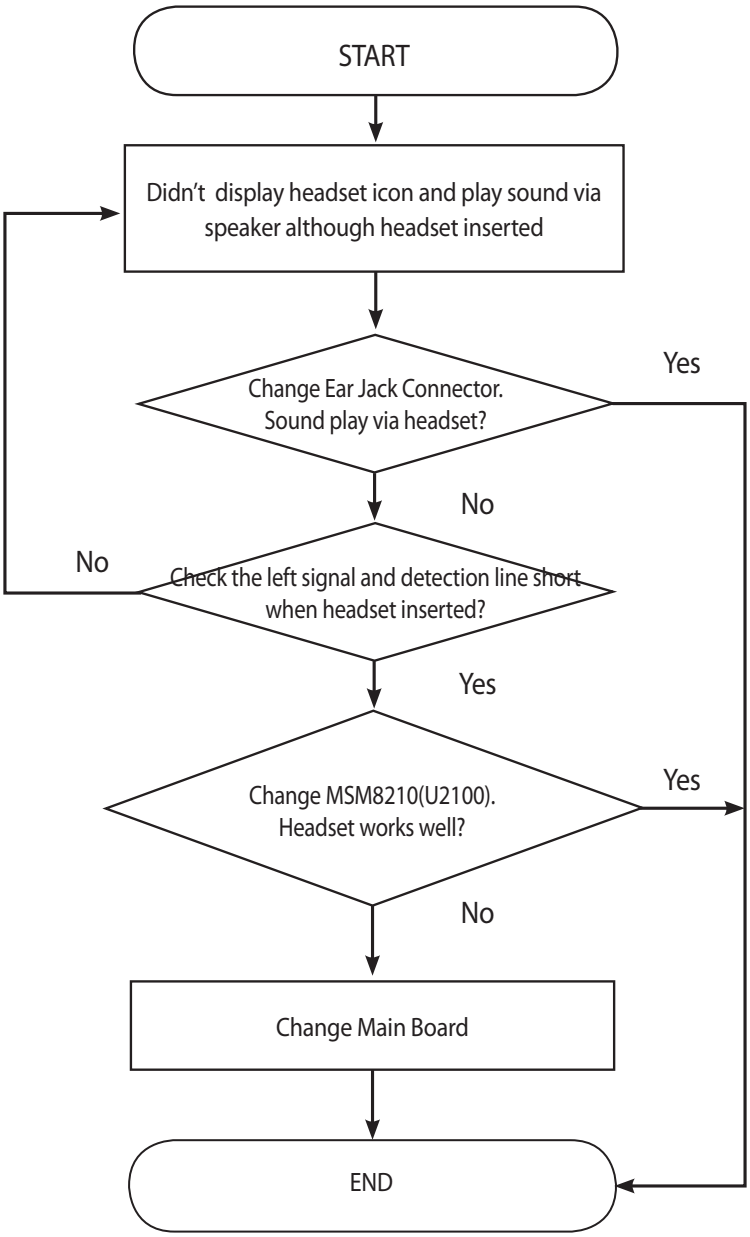

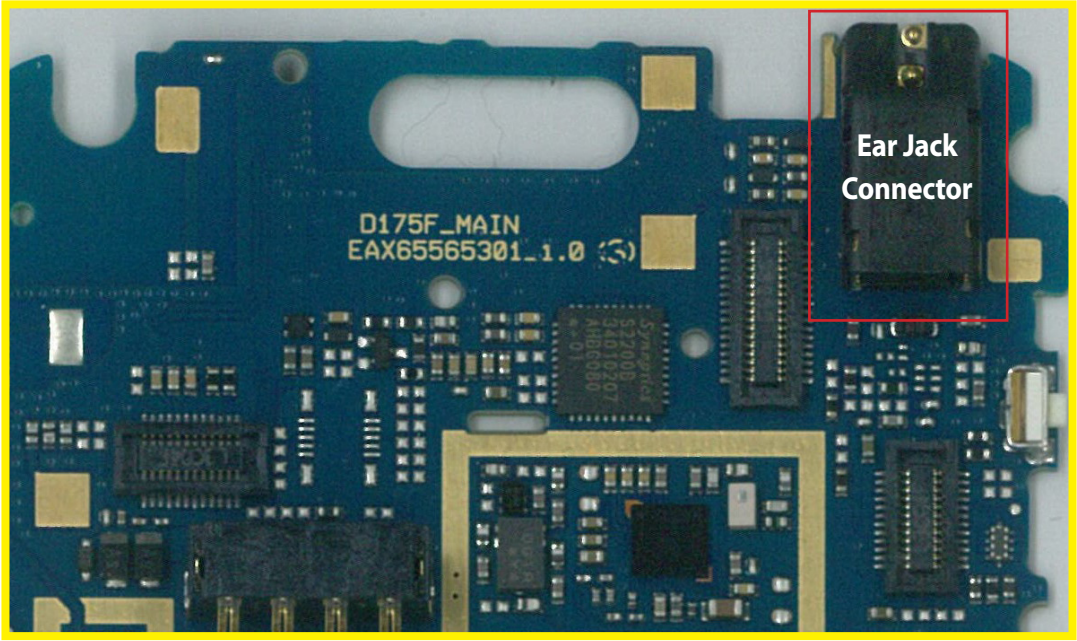

<Main Bot>

Ear Jack Connector

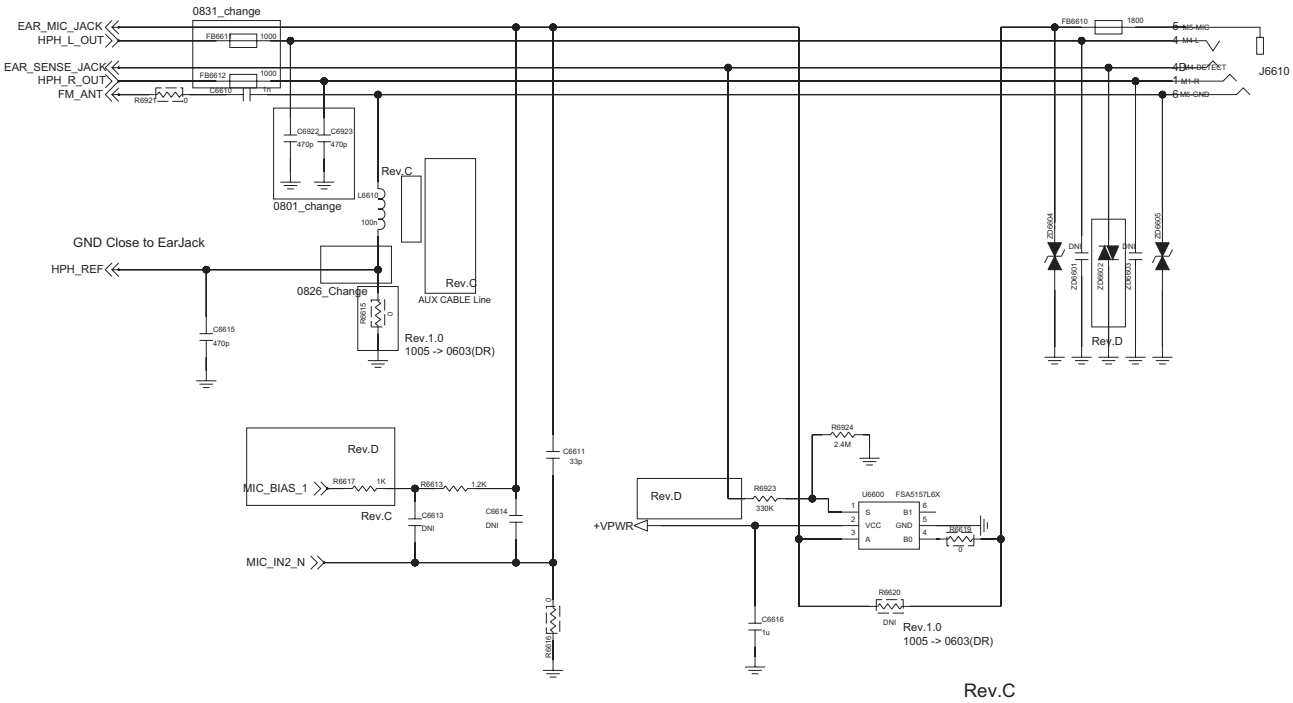

Case B. No Sound from Headset

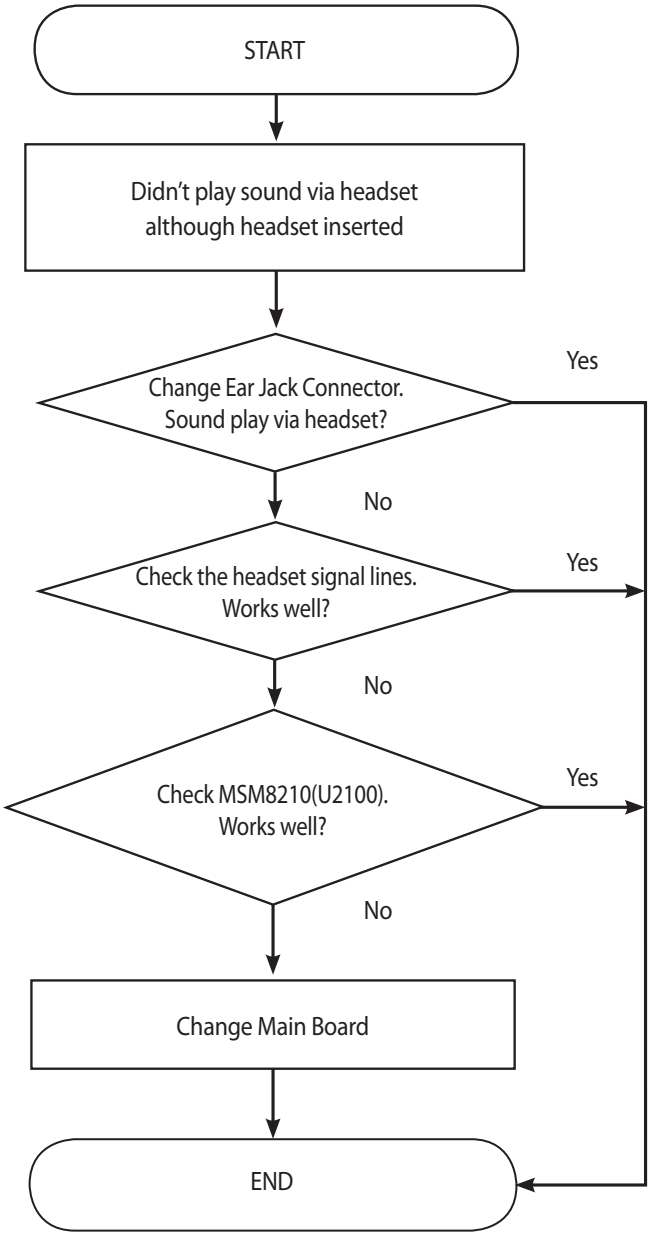

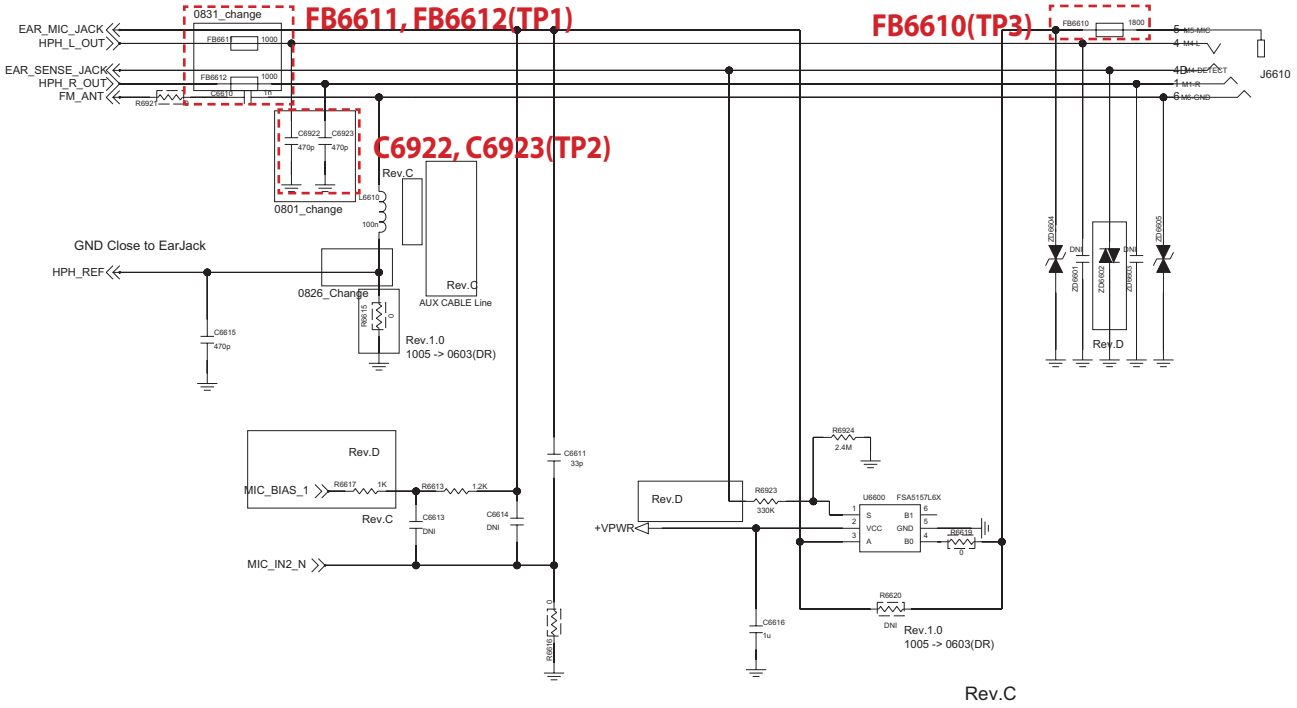

Check the headset MIC bias. (FB6610)TP3

In case of you can't check the headset signal lines (FB6611, FB6612)TP1

Can heard sound but sound is abnormal, check (C6922, C6923)TP2

3.9 3 AXIS Sensor on/off TS

The 3 AXIS sensor is calibrated by the sensor data using SW algorithm.

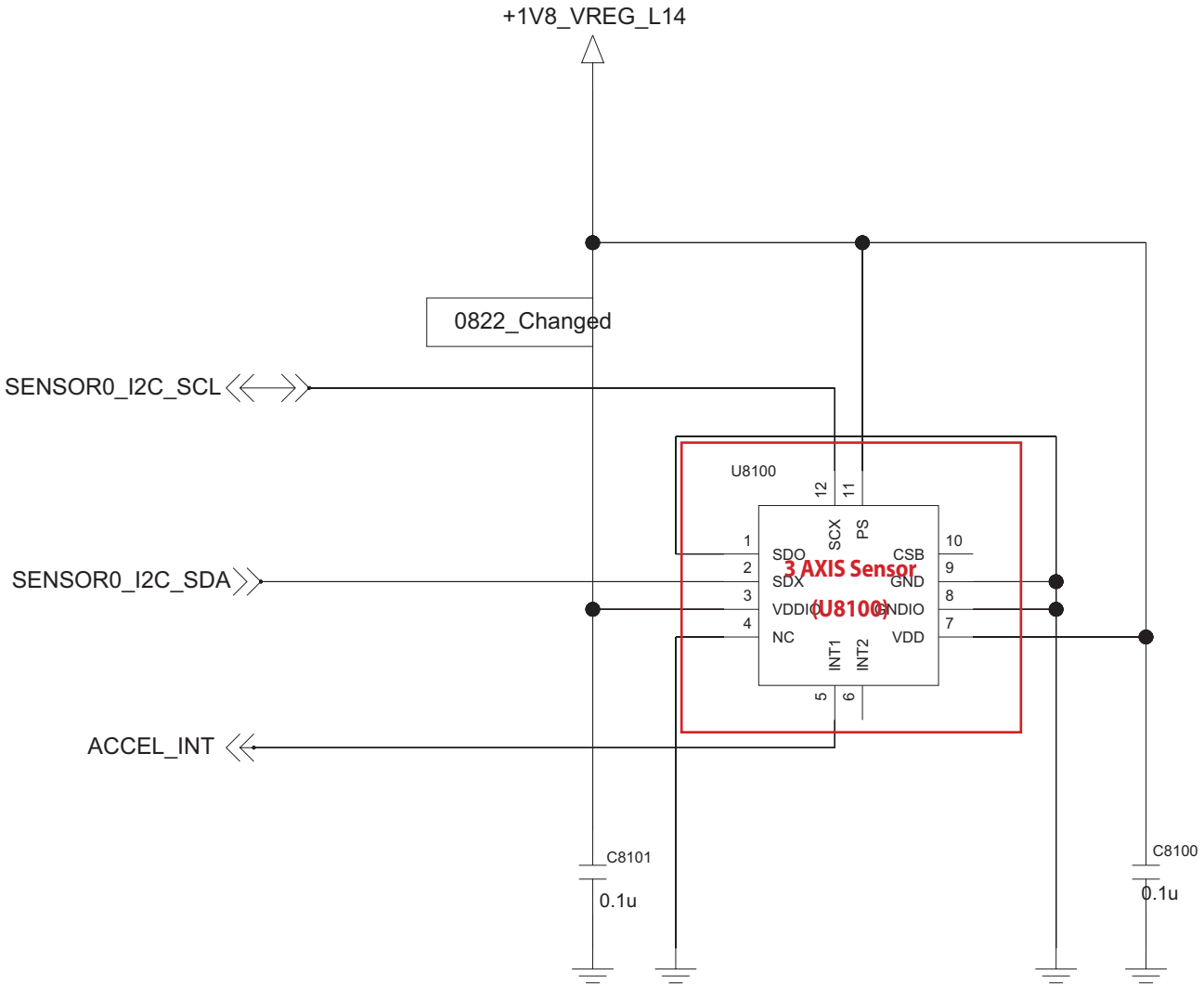

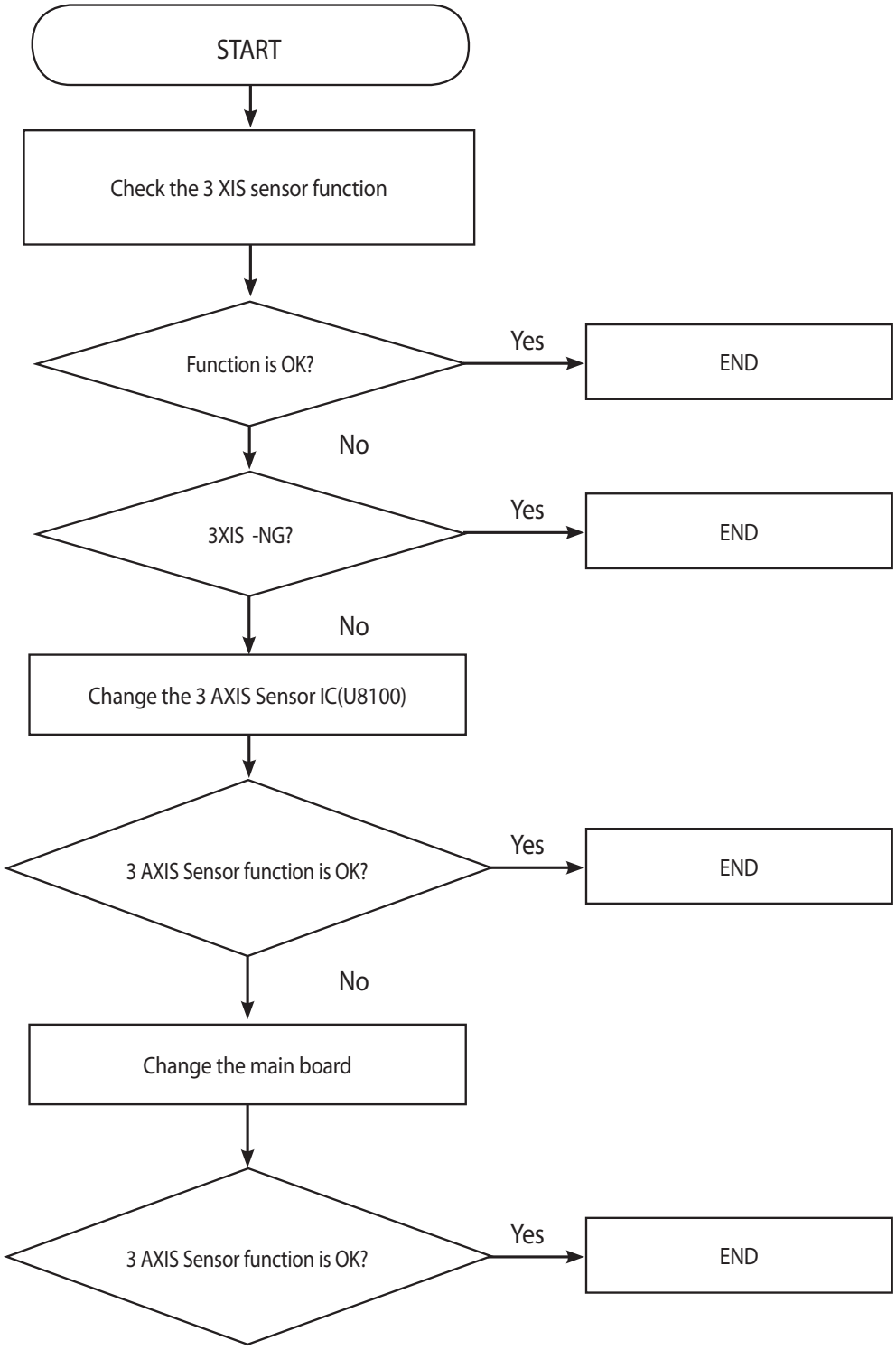

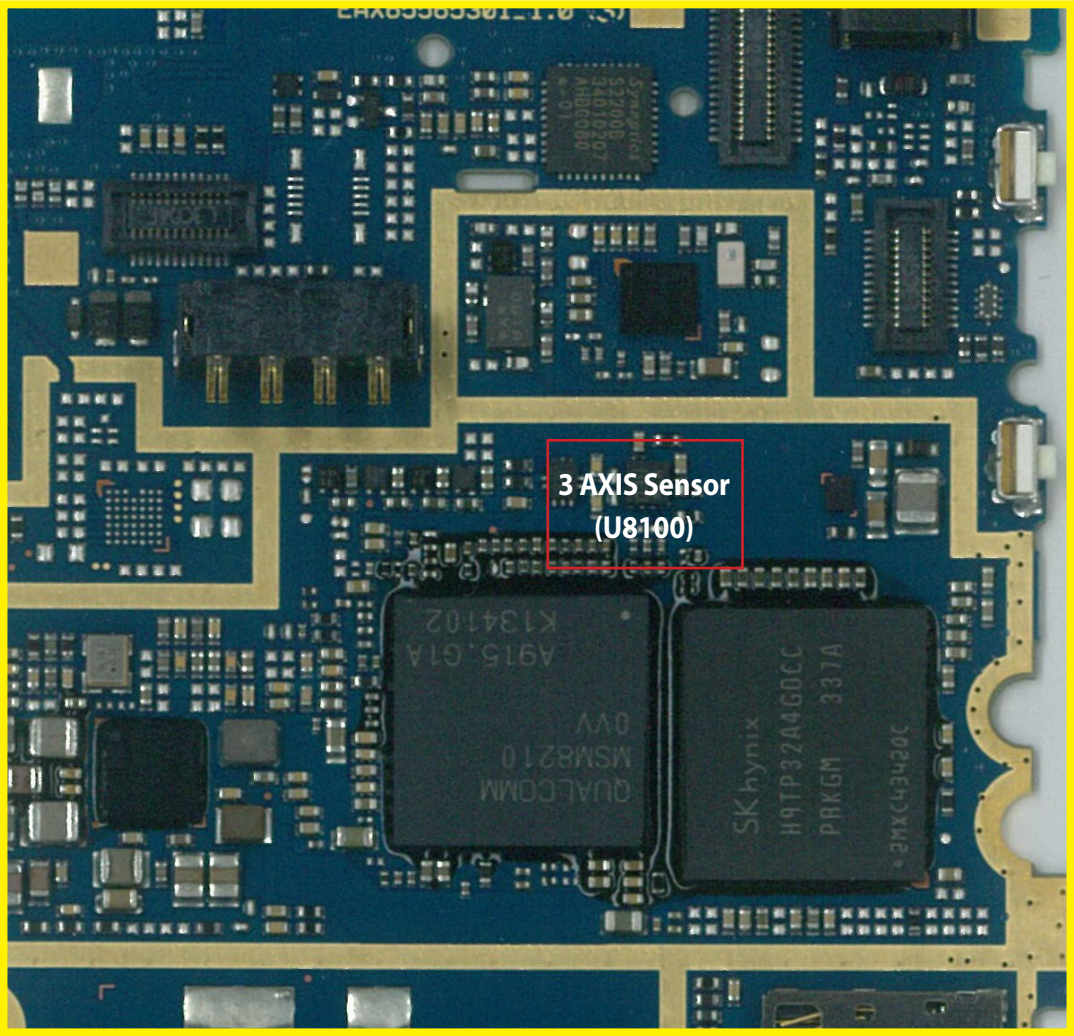

<Main Bot>

3.10 Proximity Sensor

Proximity Sensor is worked as below:

Send Key click -> Phone number click -> Call connected -> Object moved at the sensor -> Control the screen's on/off operation automatically.

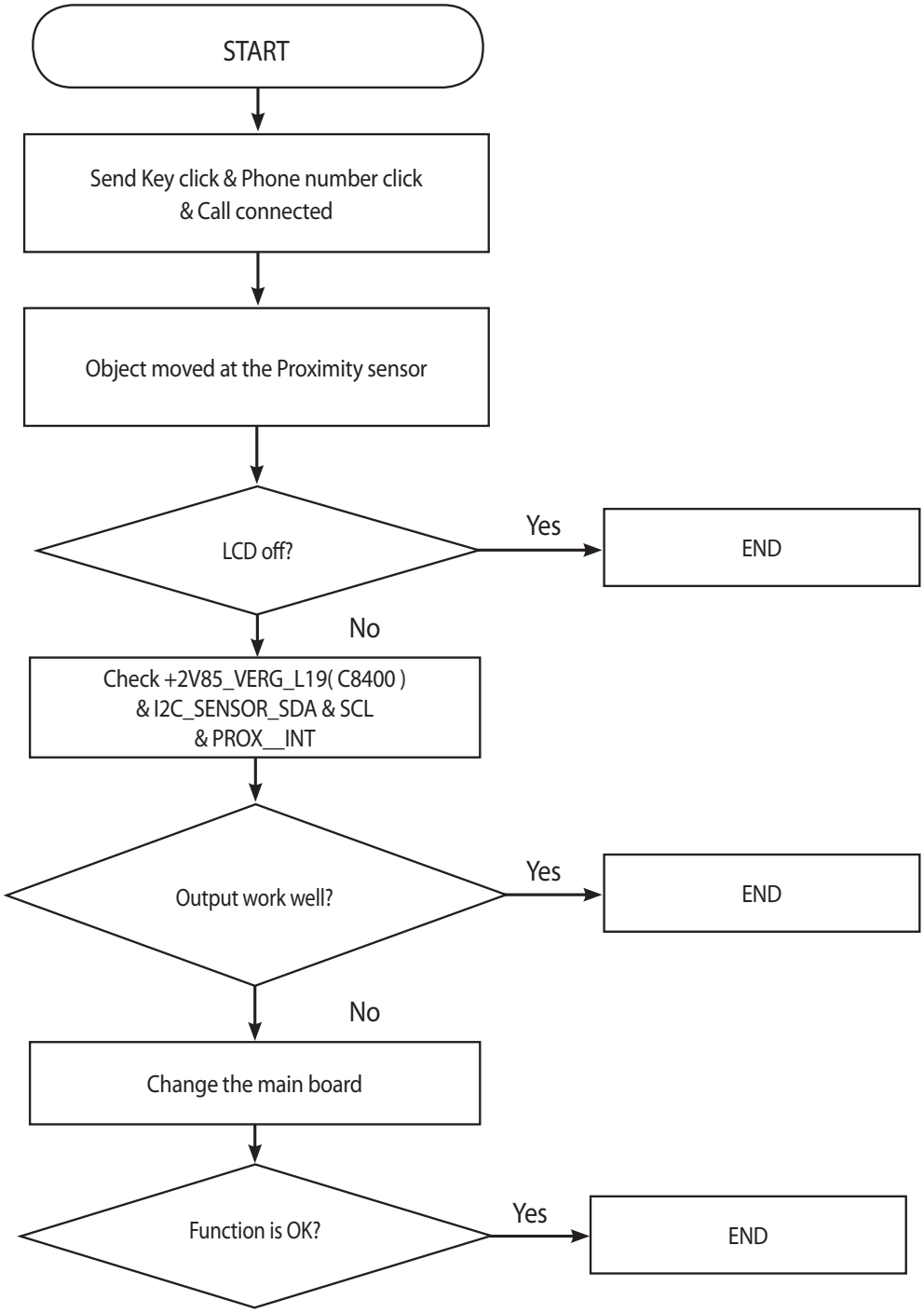

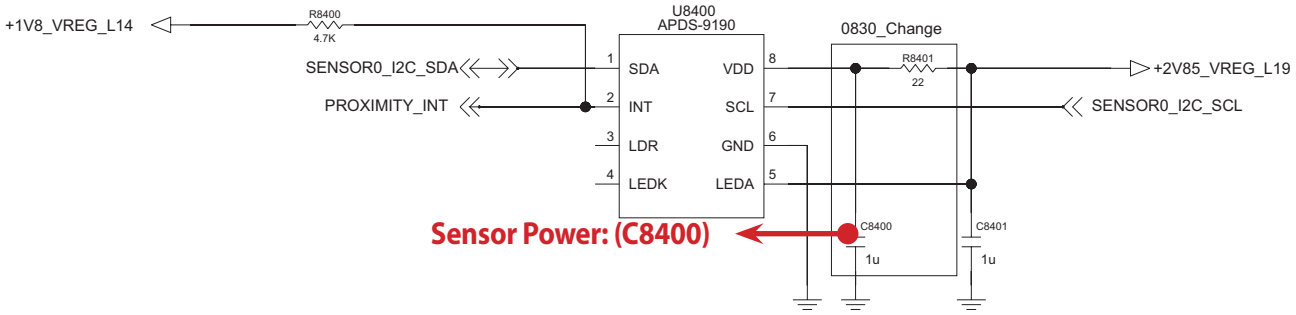

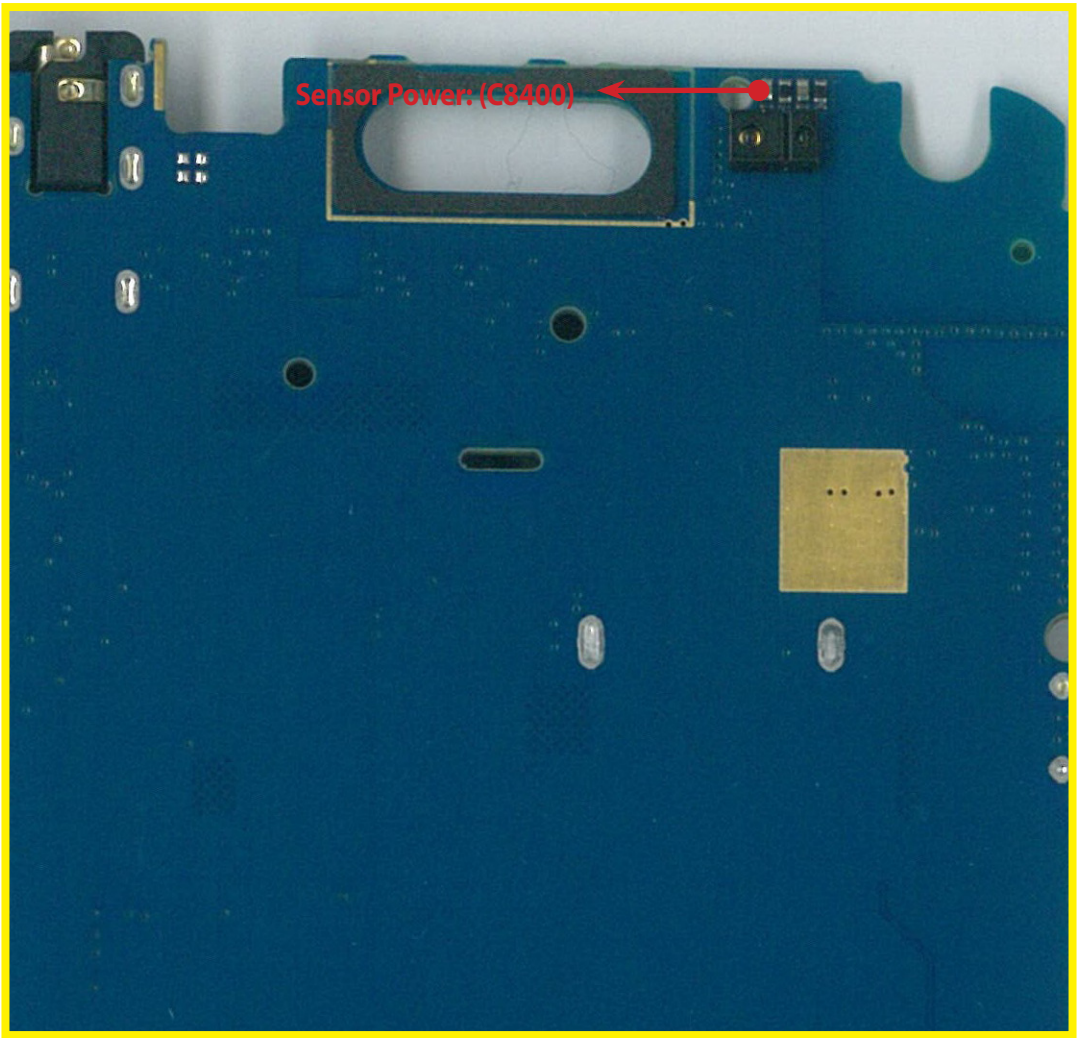

<Main Top>

3.11 Touch Sensor Trouble Shooting

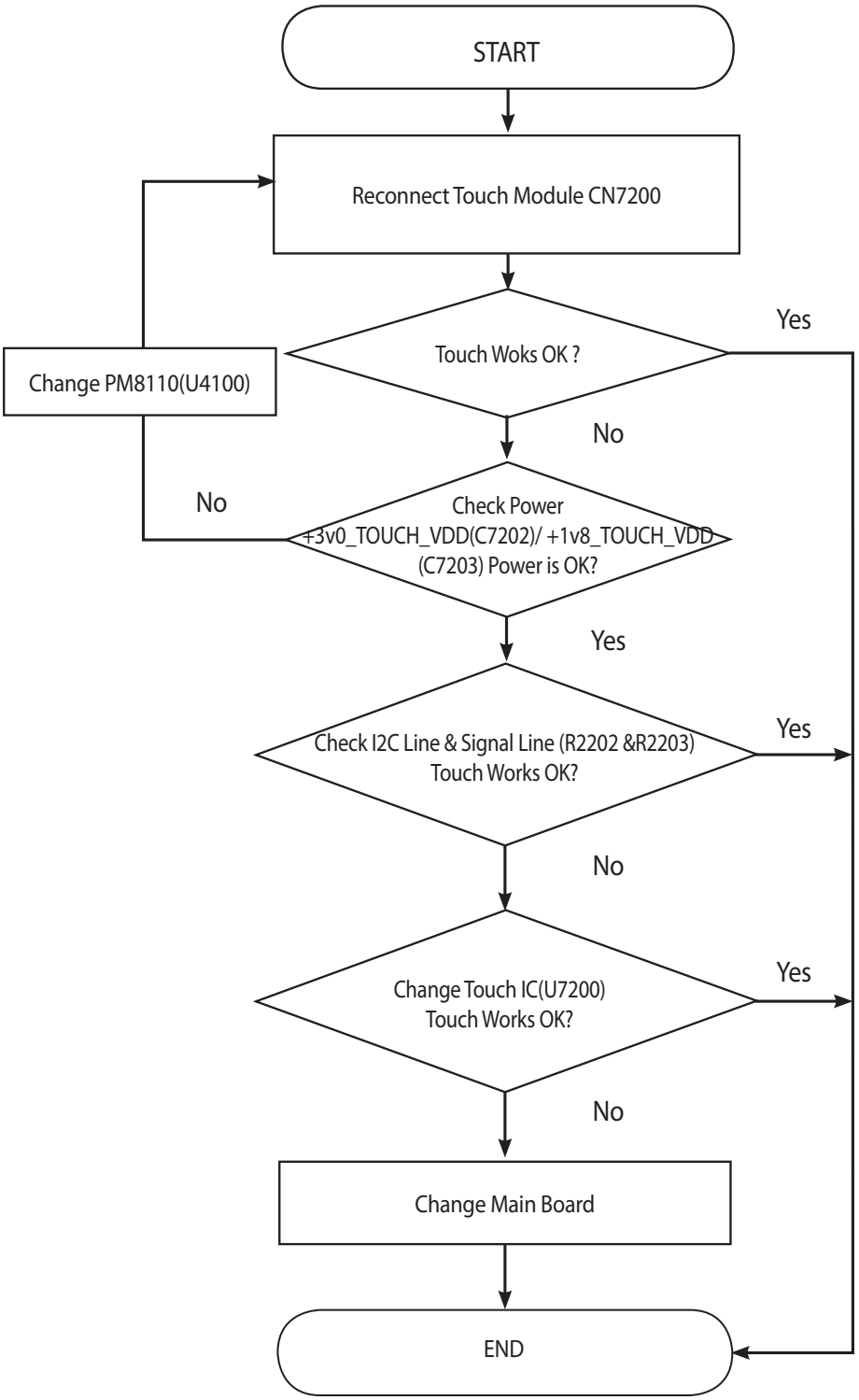

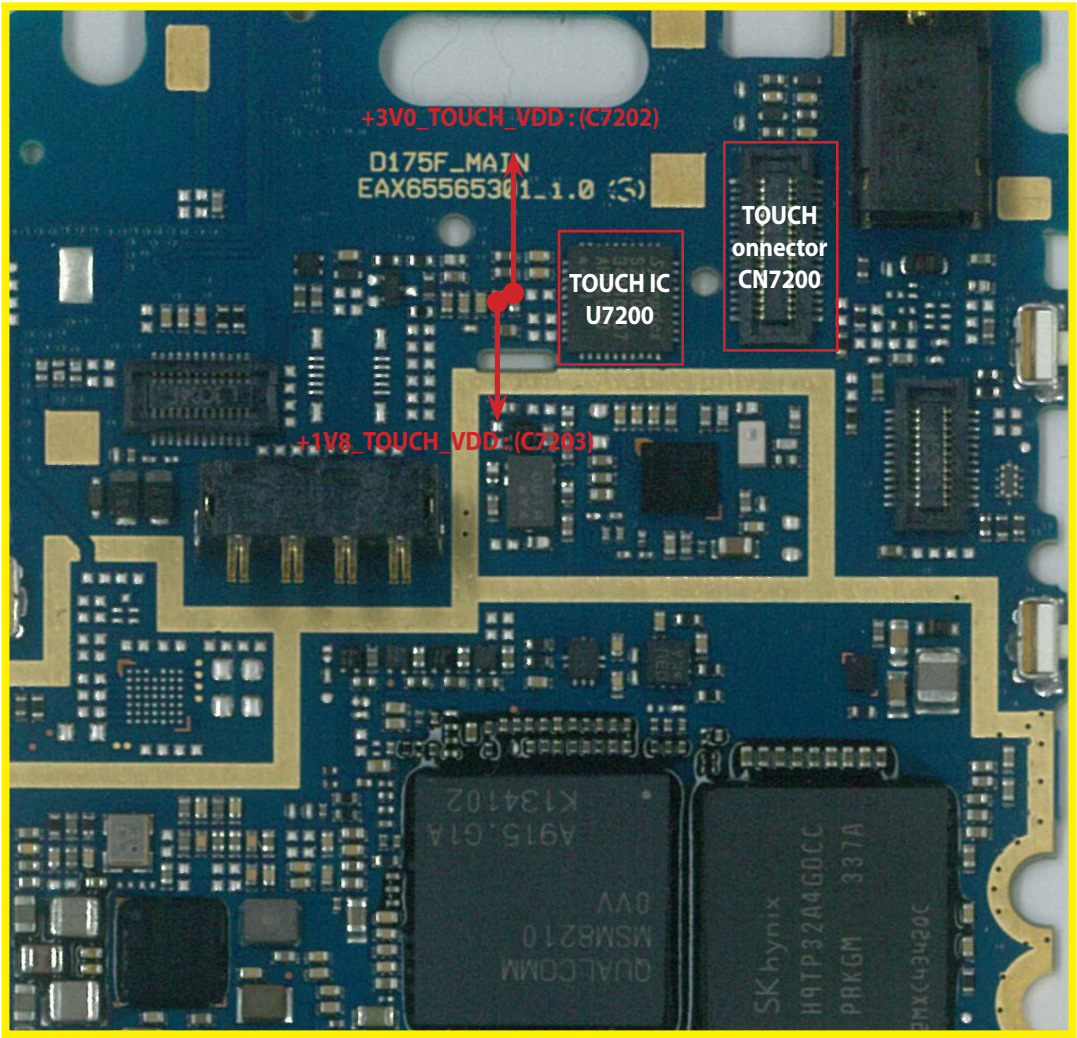

<Main Bot>

3.12 Vibrator Trouble Shooting

Vibrator signal path is PM8110(U4100) -> Vibrator. Motor Type is DC Motor

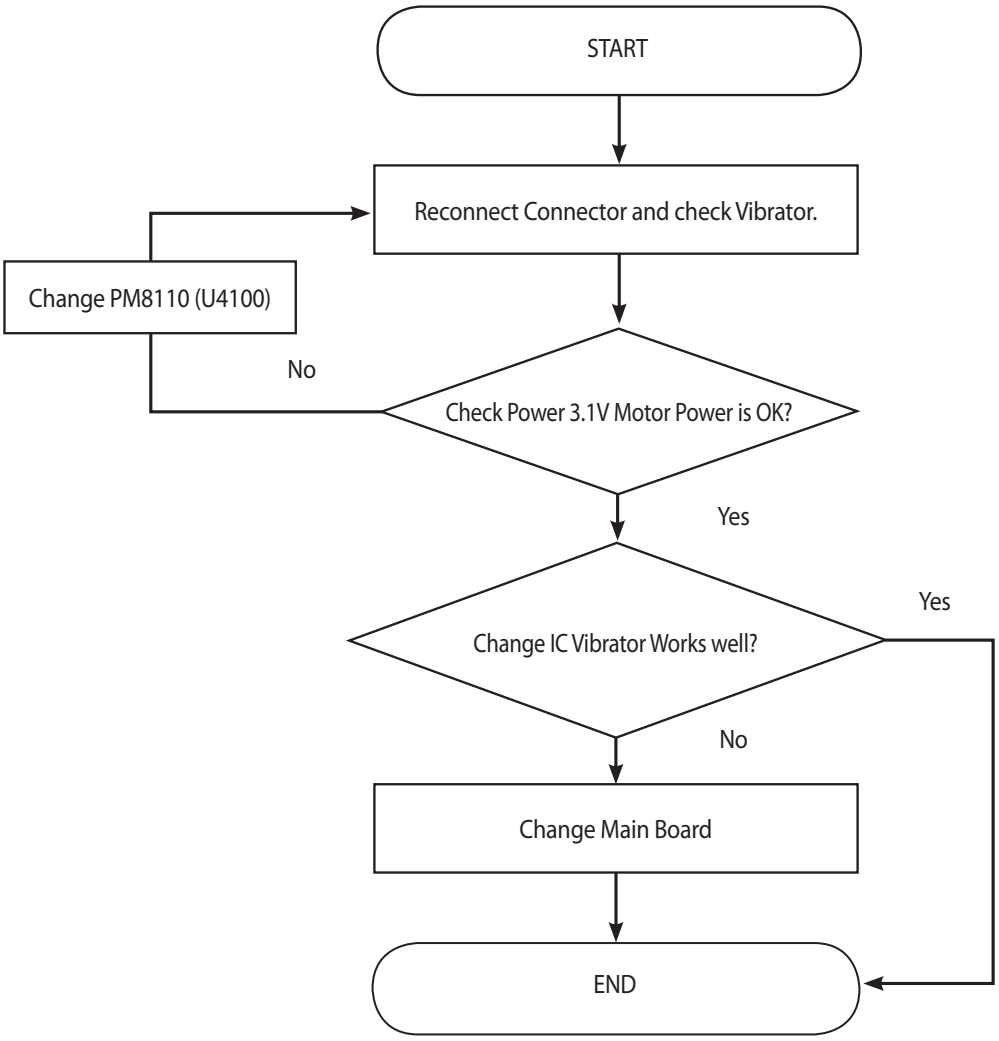

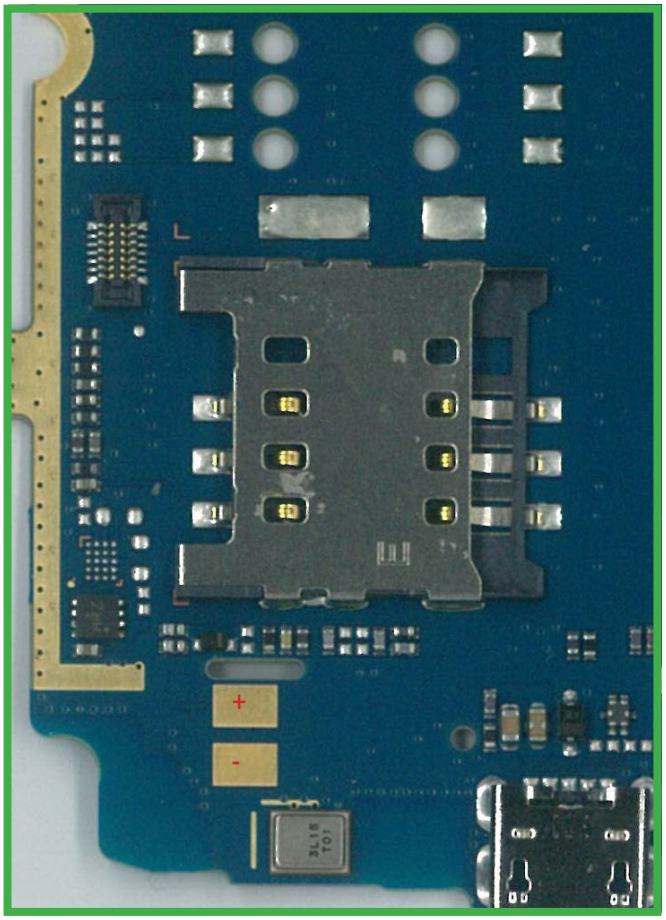

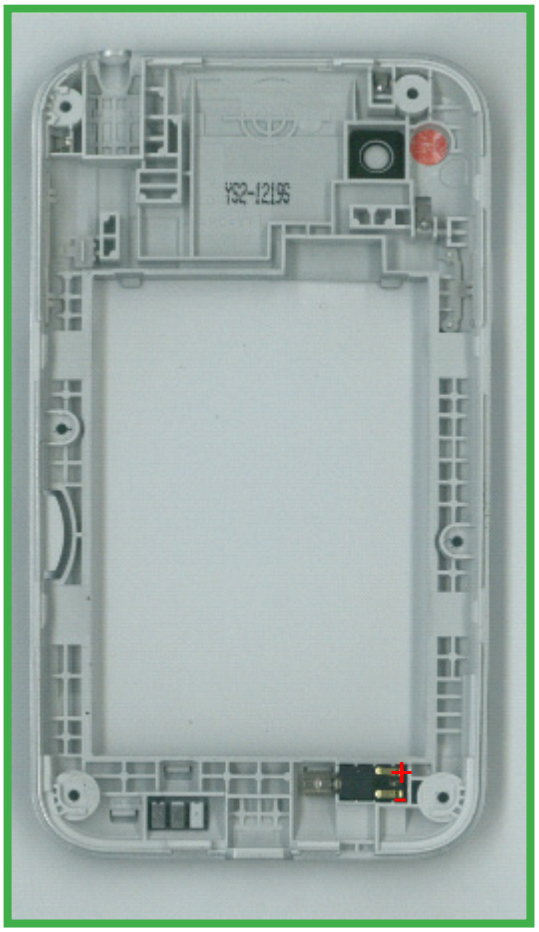

3.13 3M Main Camera TS

3M camera control signals are generated by MSM8210(U2100) and powered by voltage regulator (U7300,U8401 : LDO) , PM8110 (U4100 : PMIC).

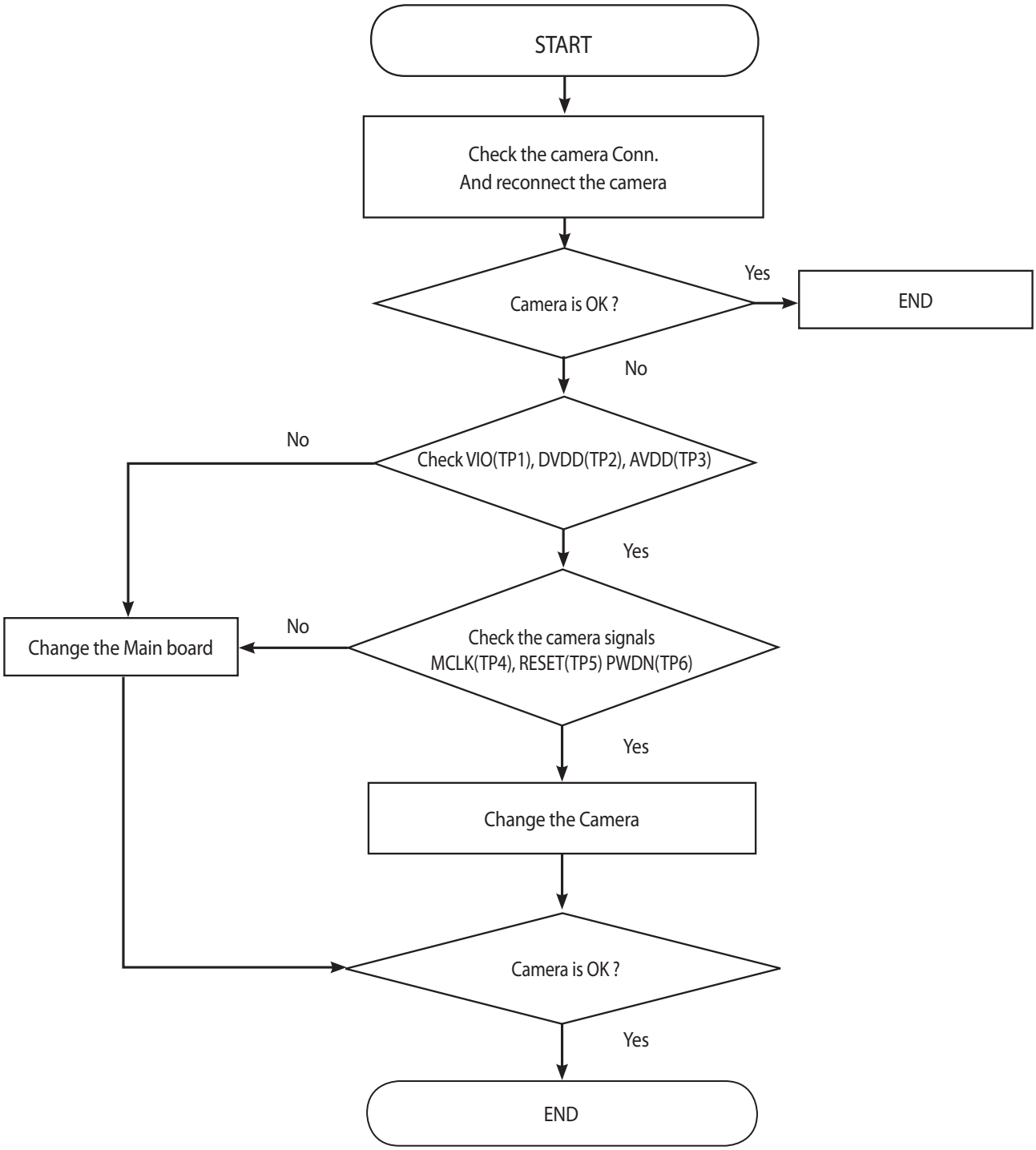

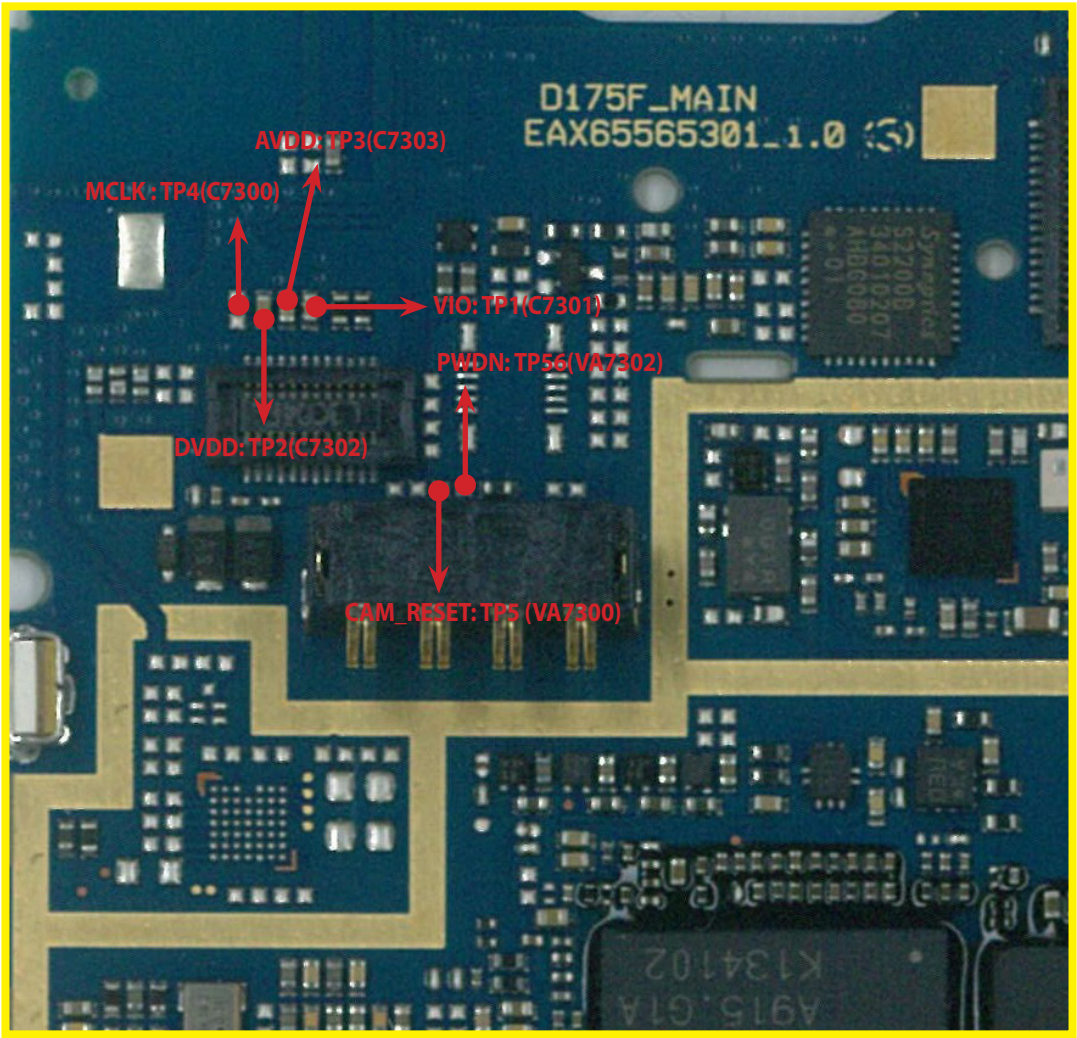

<Main Bot>

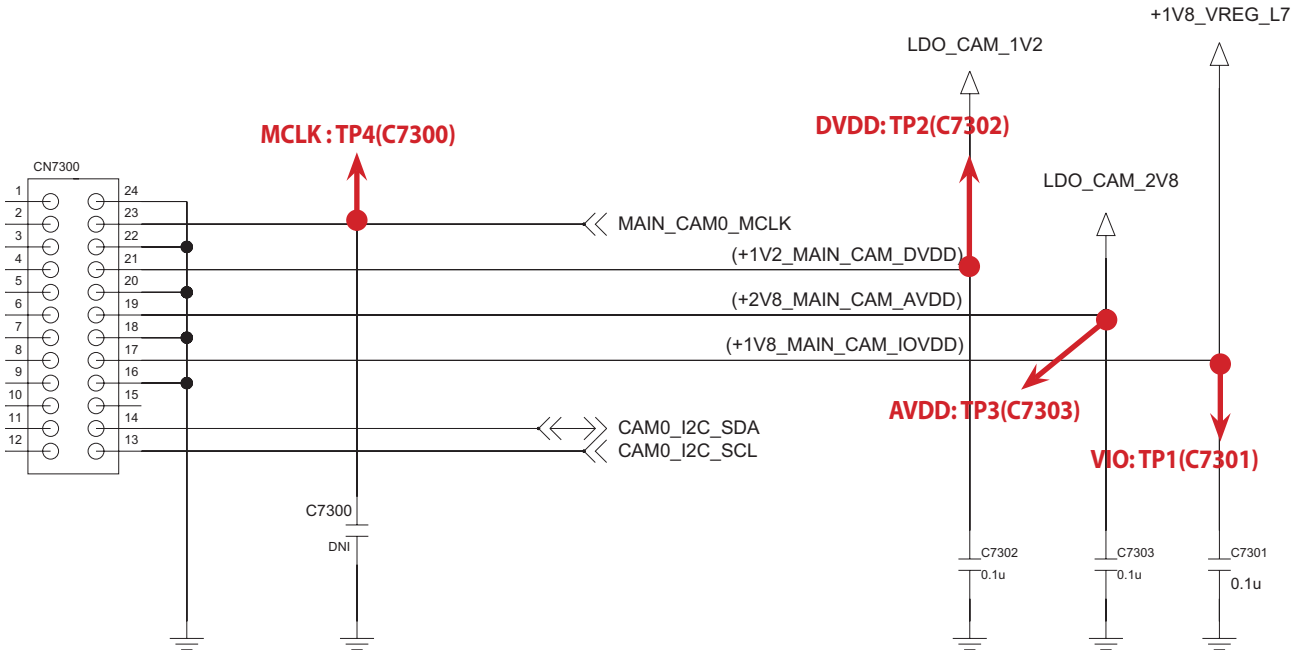

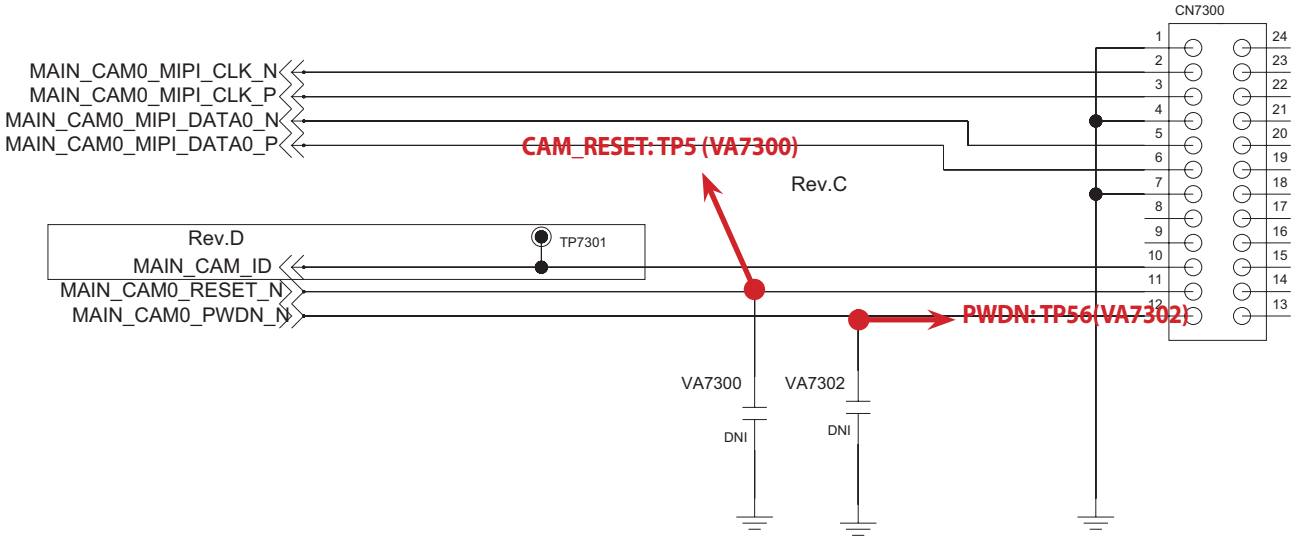

3.14 Main LCD TS

The LCD control signals are generated by MSM8210(U2100) and powered by PM8110 (U4100 : PMIC).

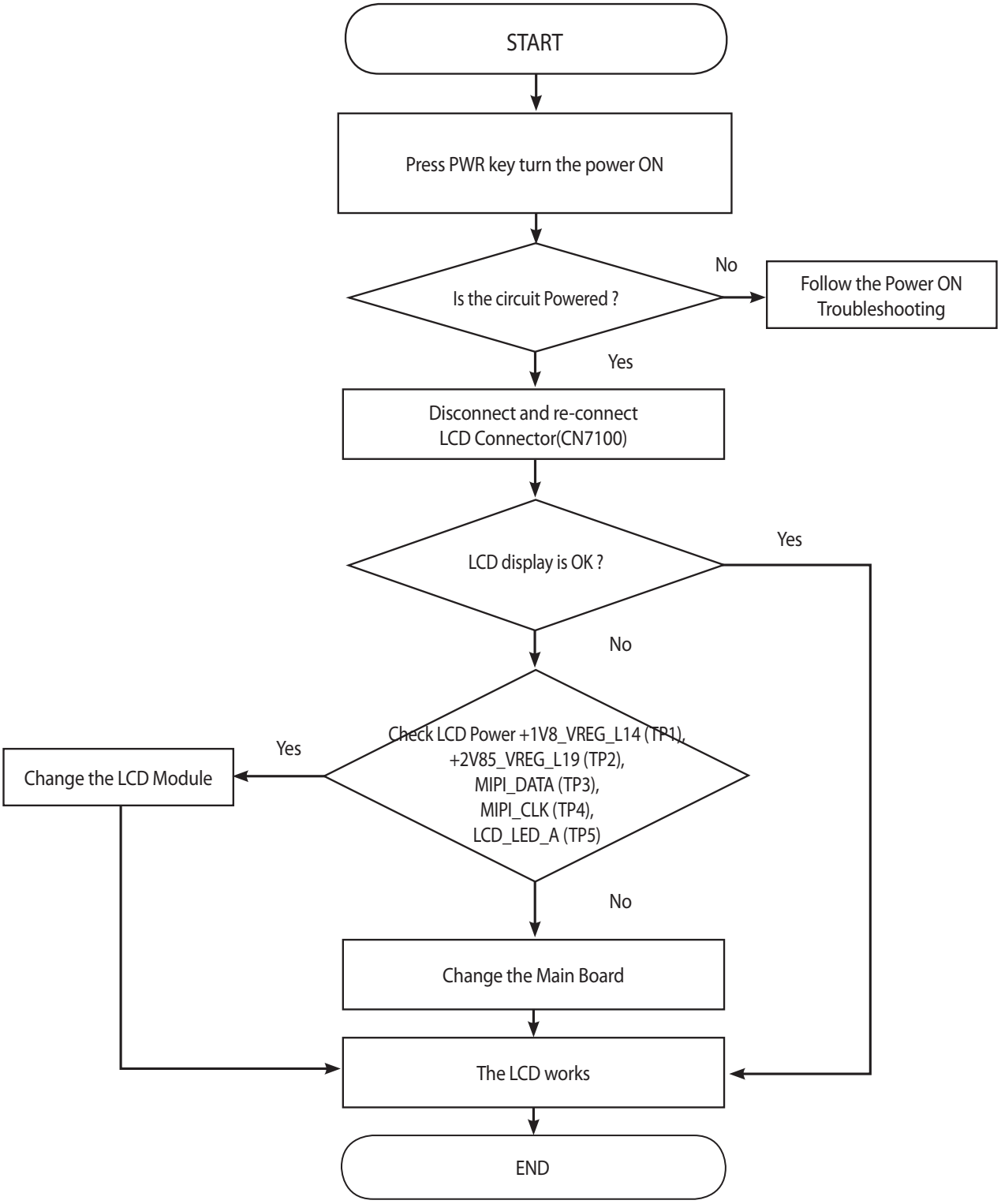

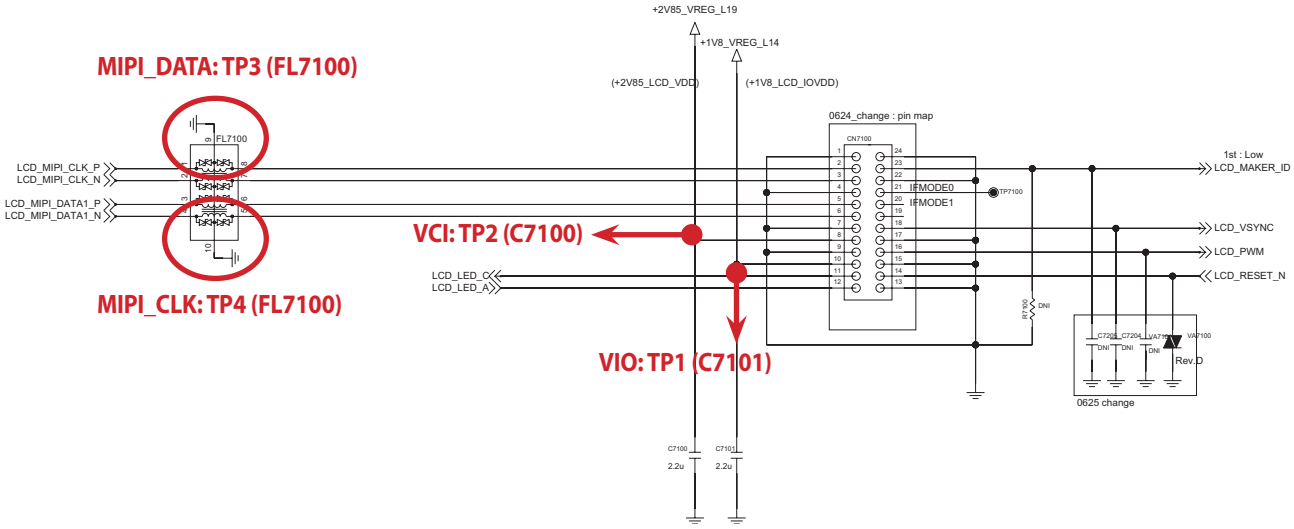

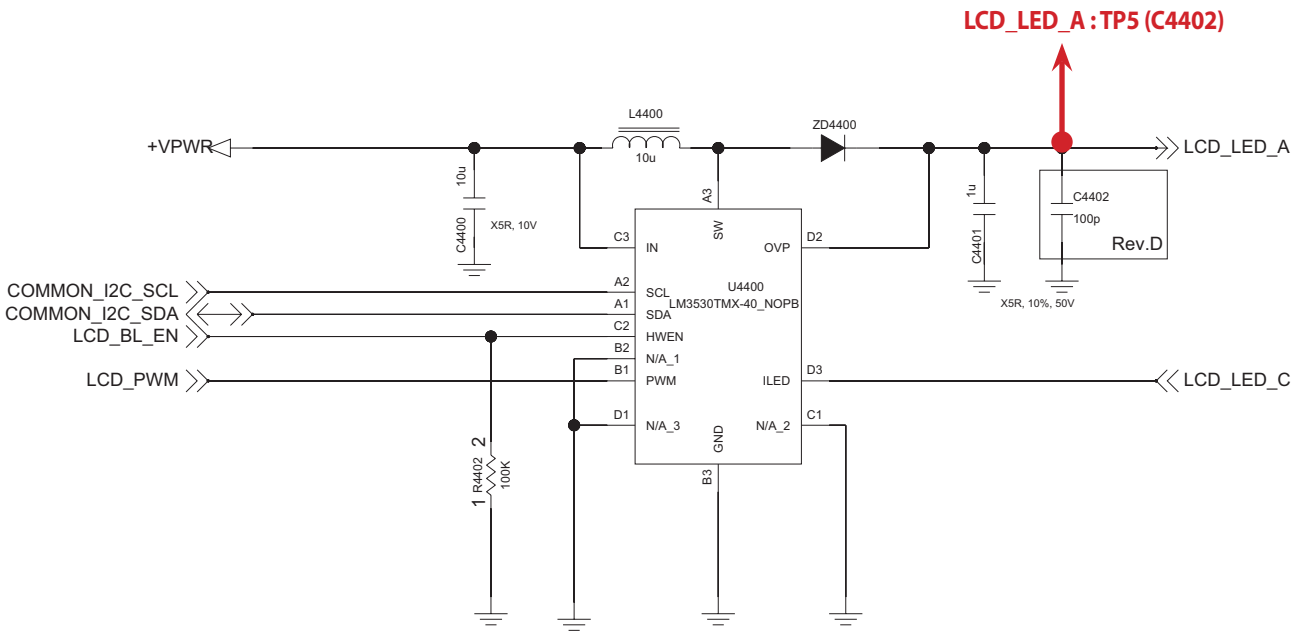

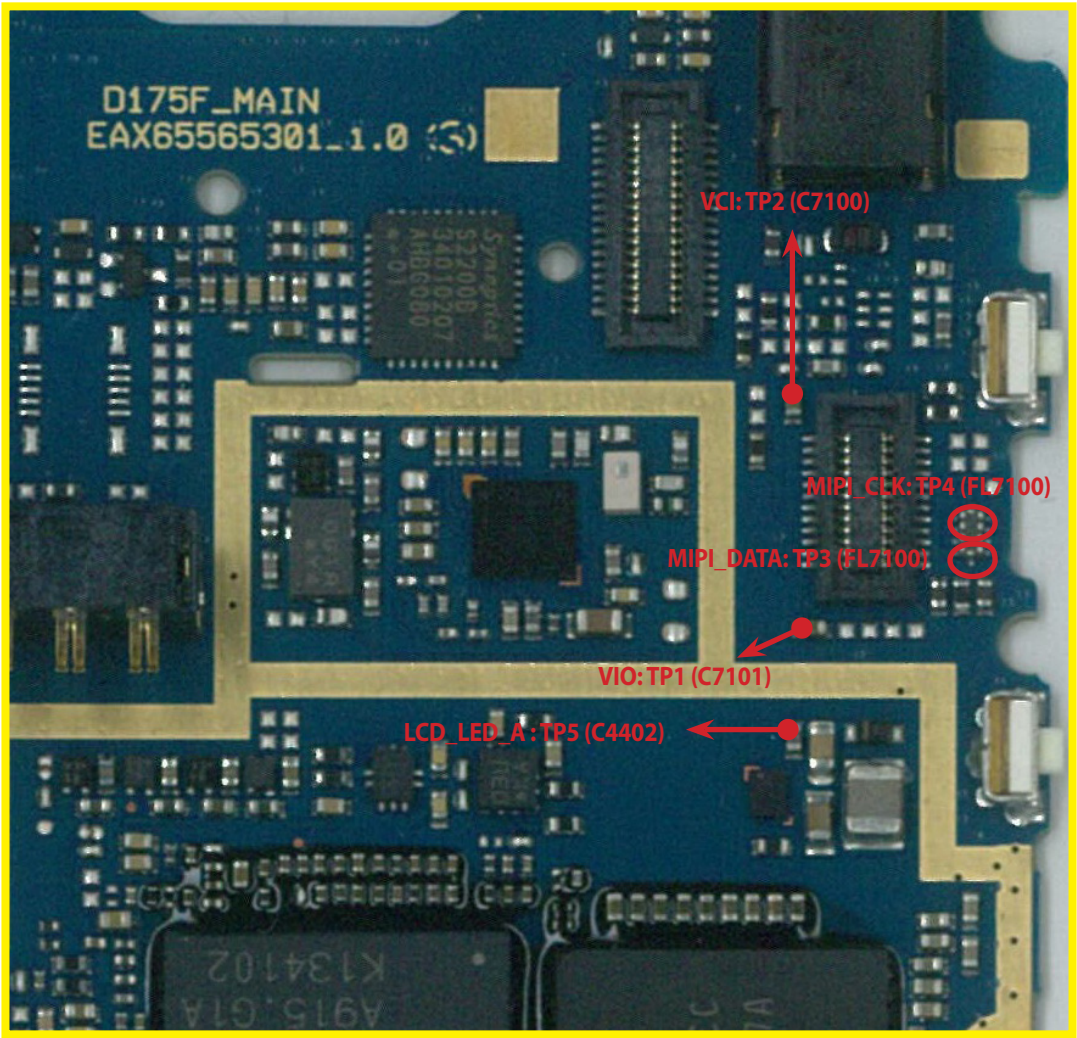

<Main Bot>

3.15 BT/Wifi

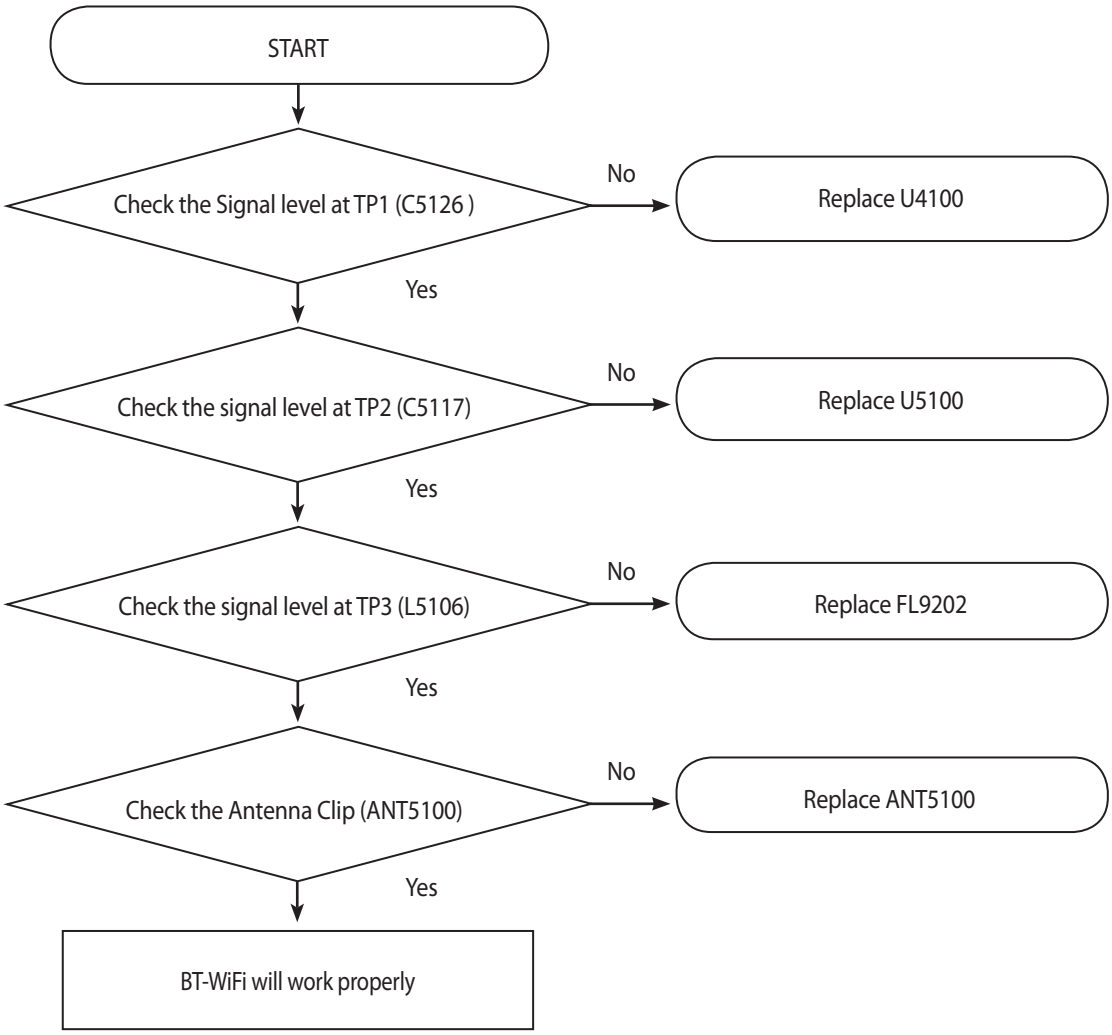

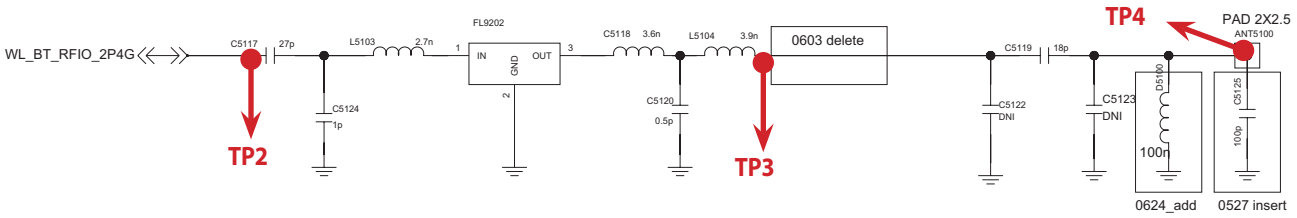

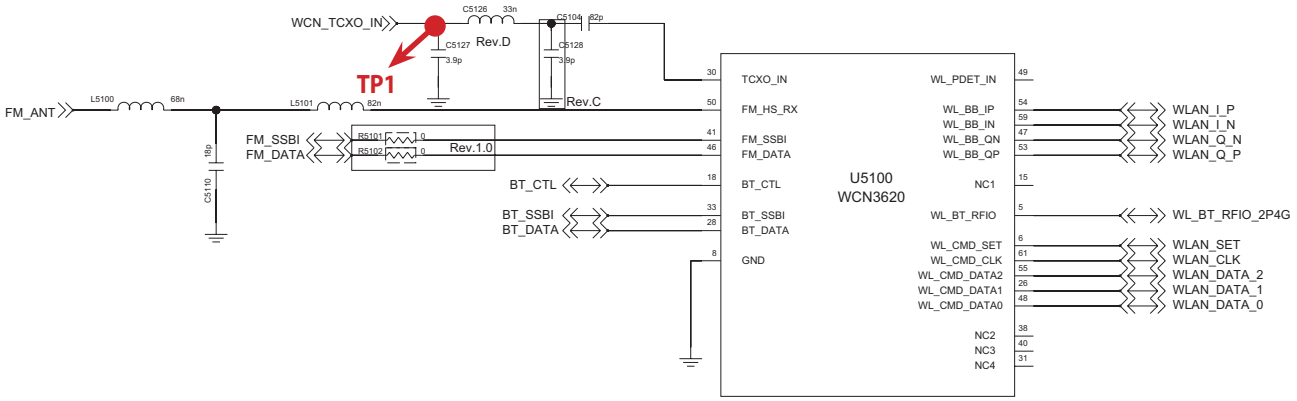

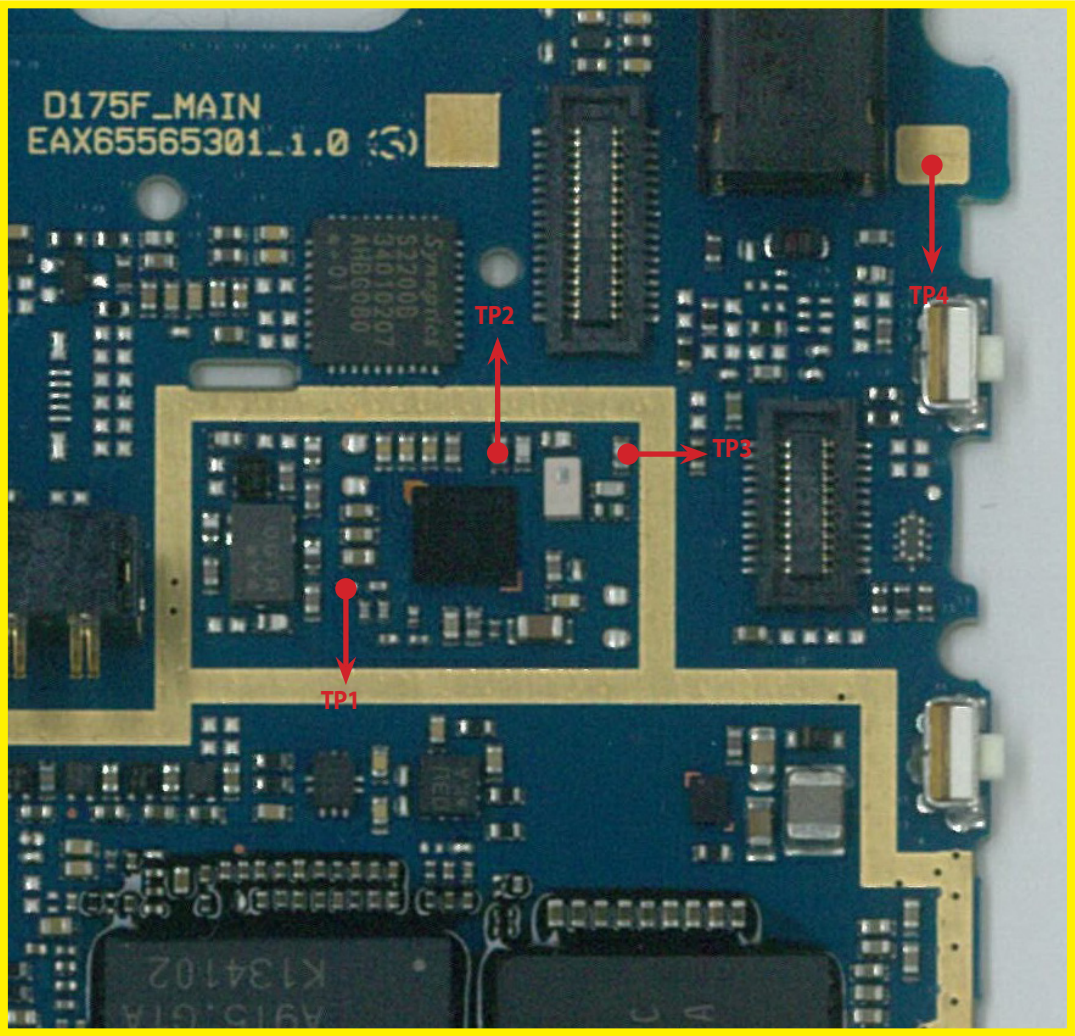

<Main Bot>

3.16 GPS Part

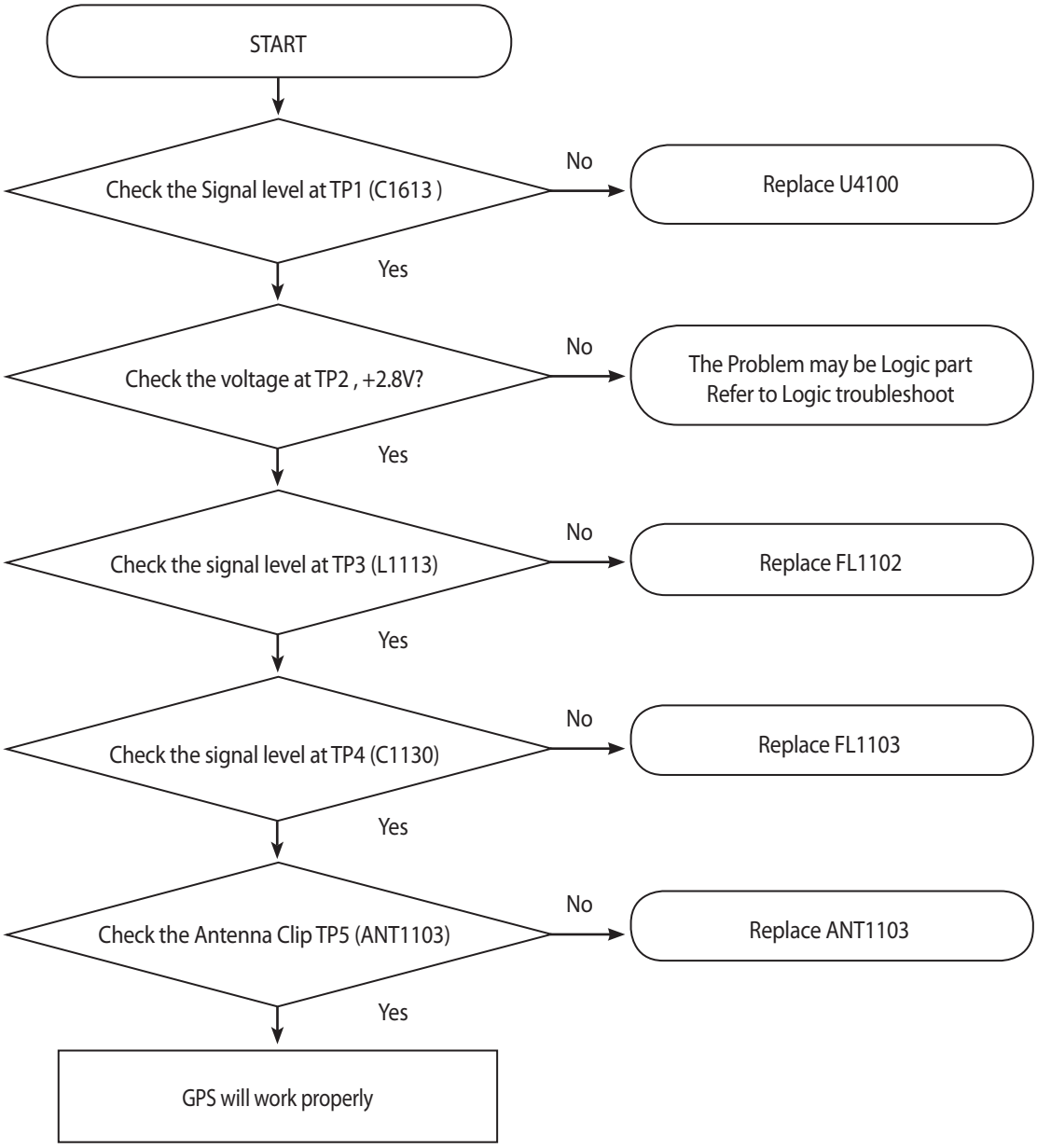

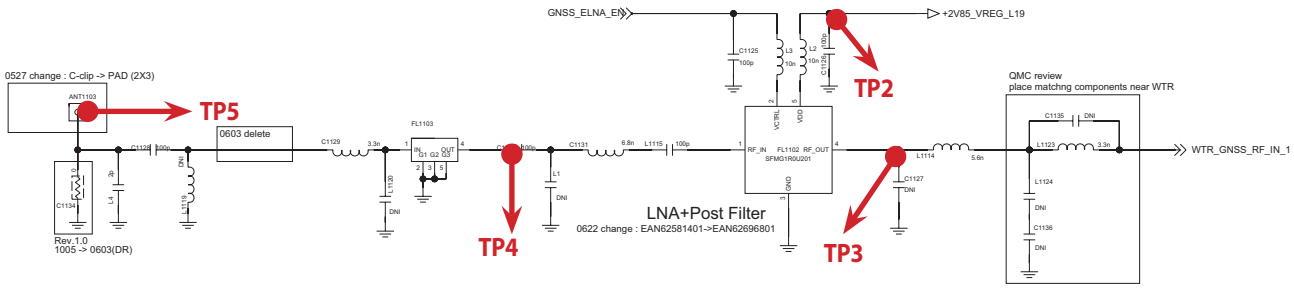

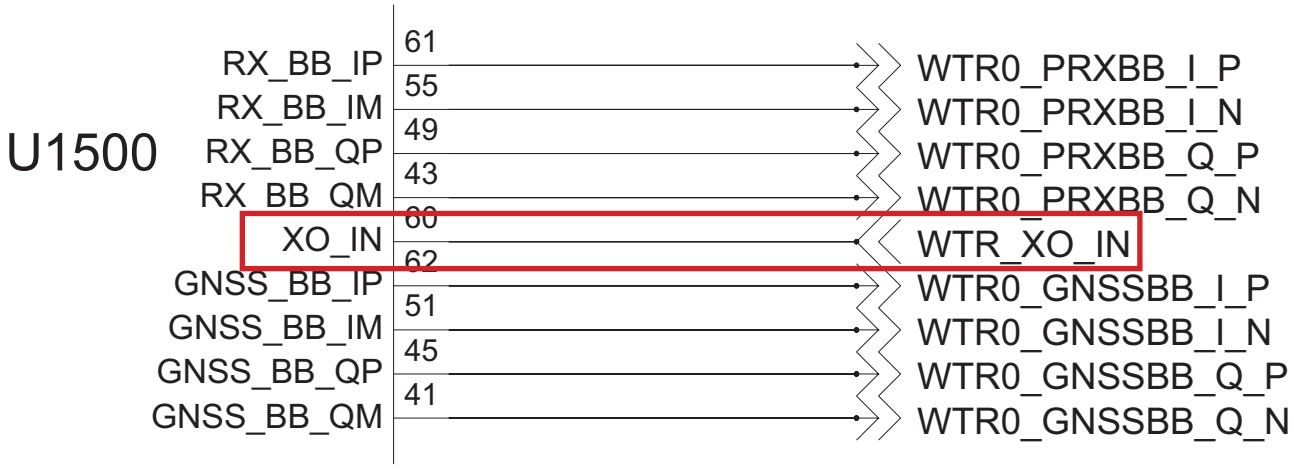

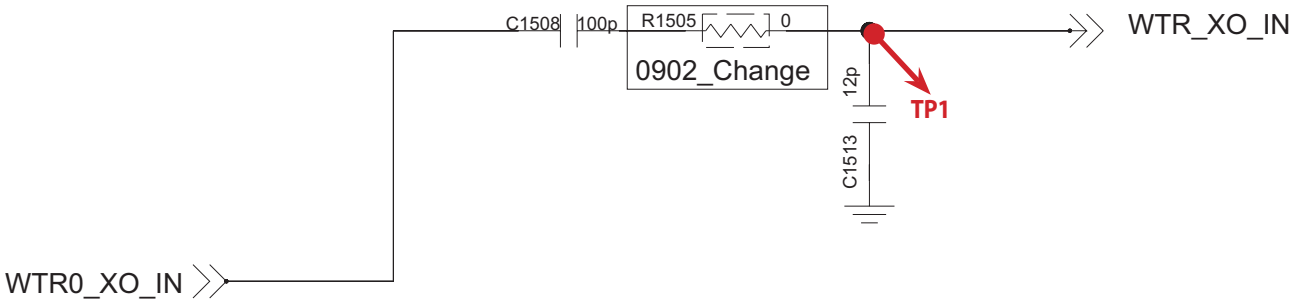

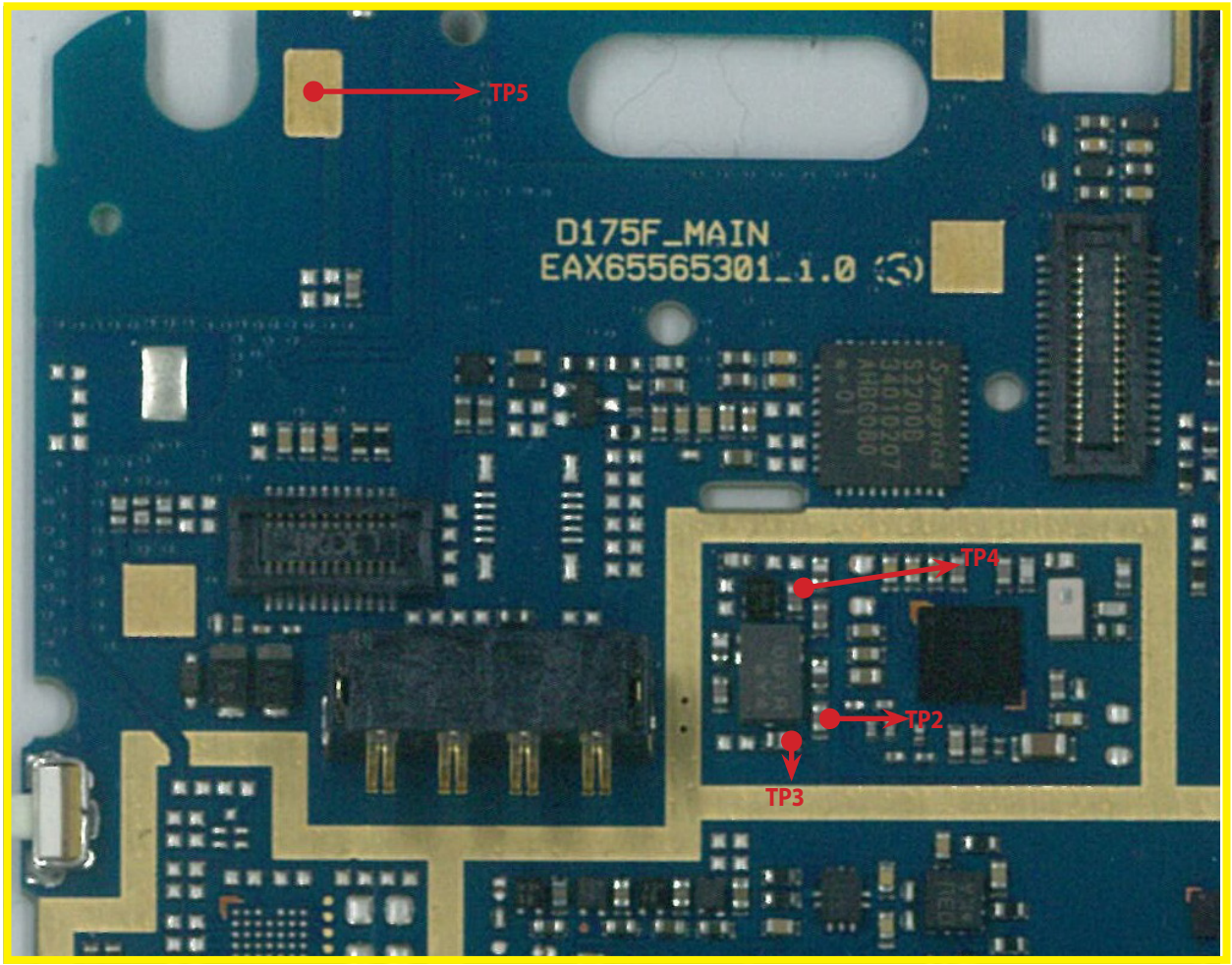

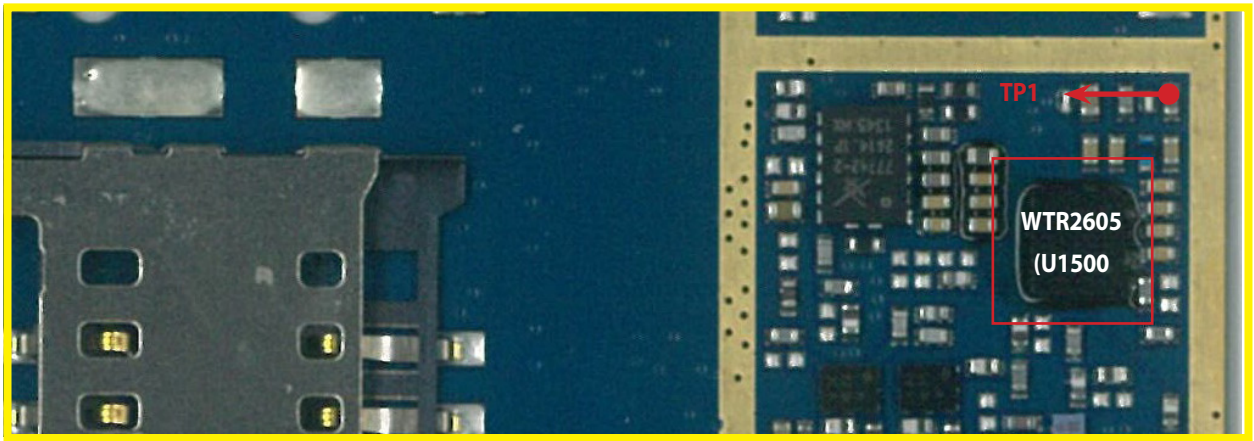

<Main Bot>

3.17 FM TS

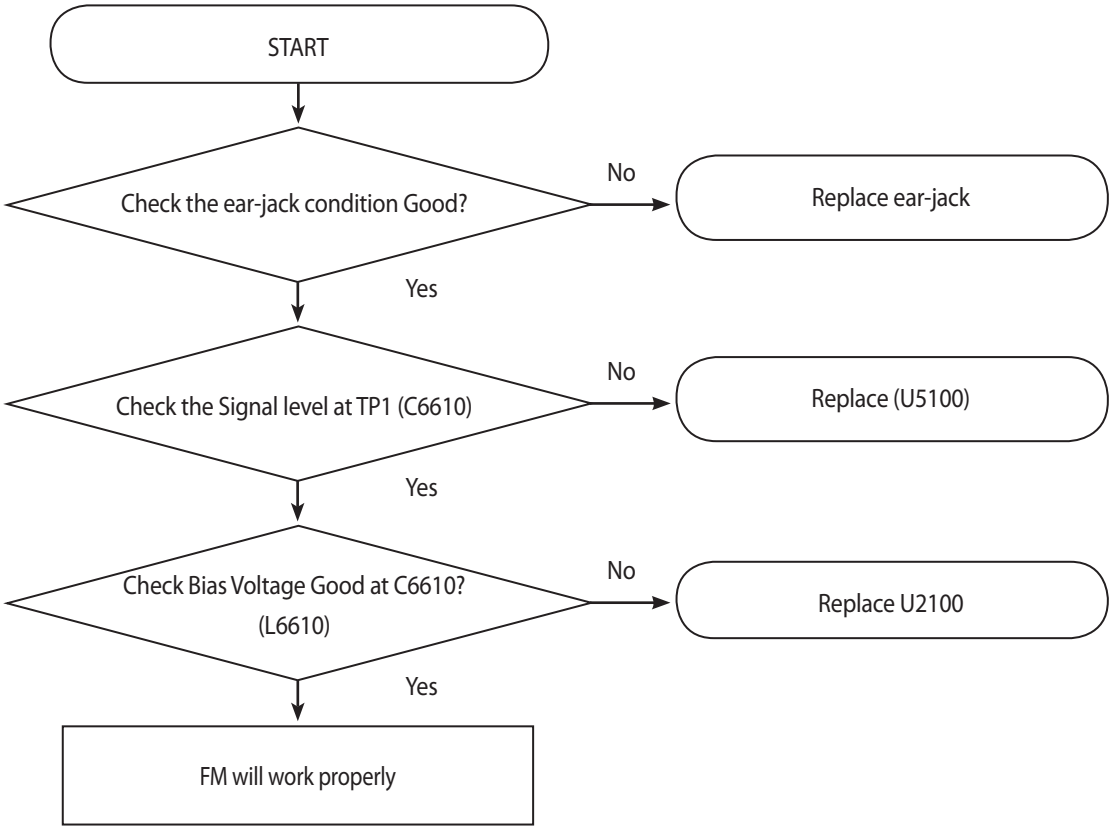

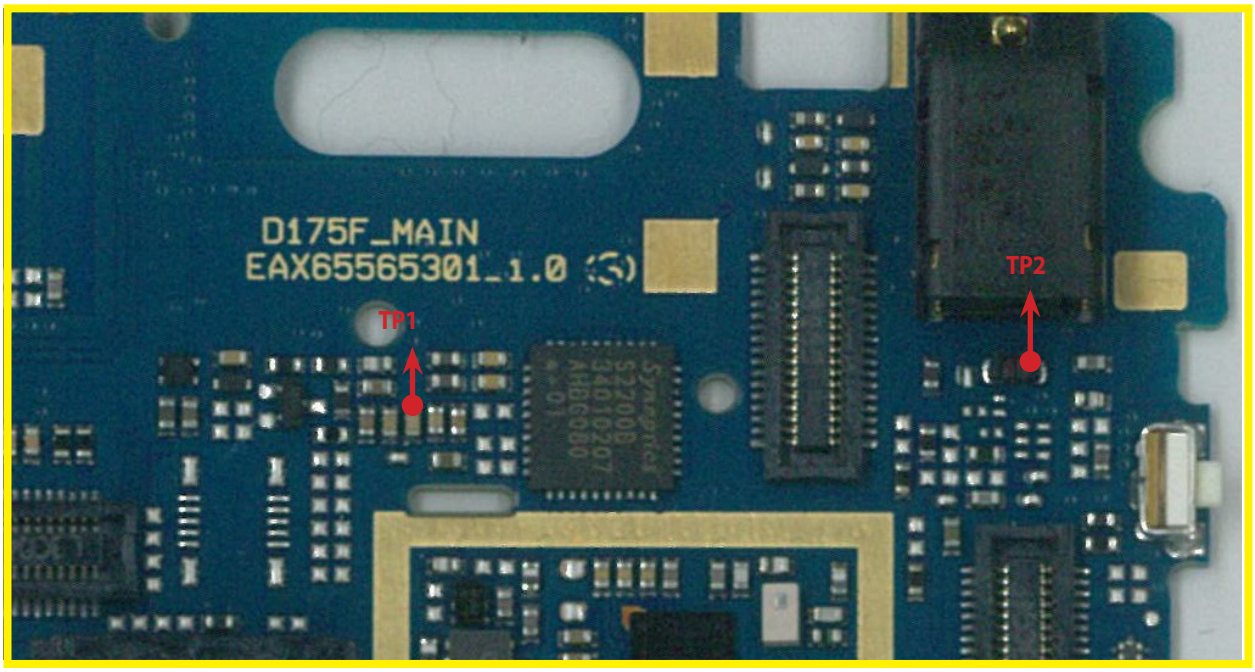

<Main Bot>

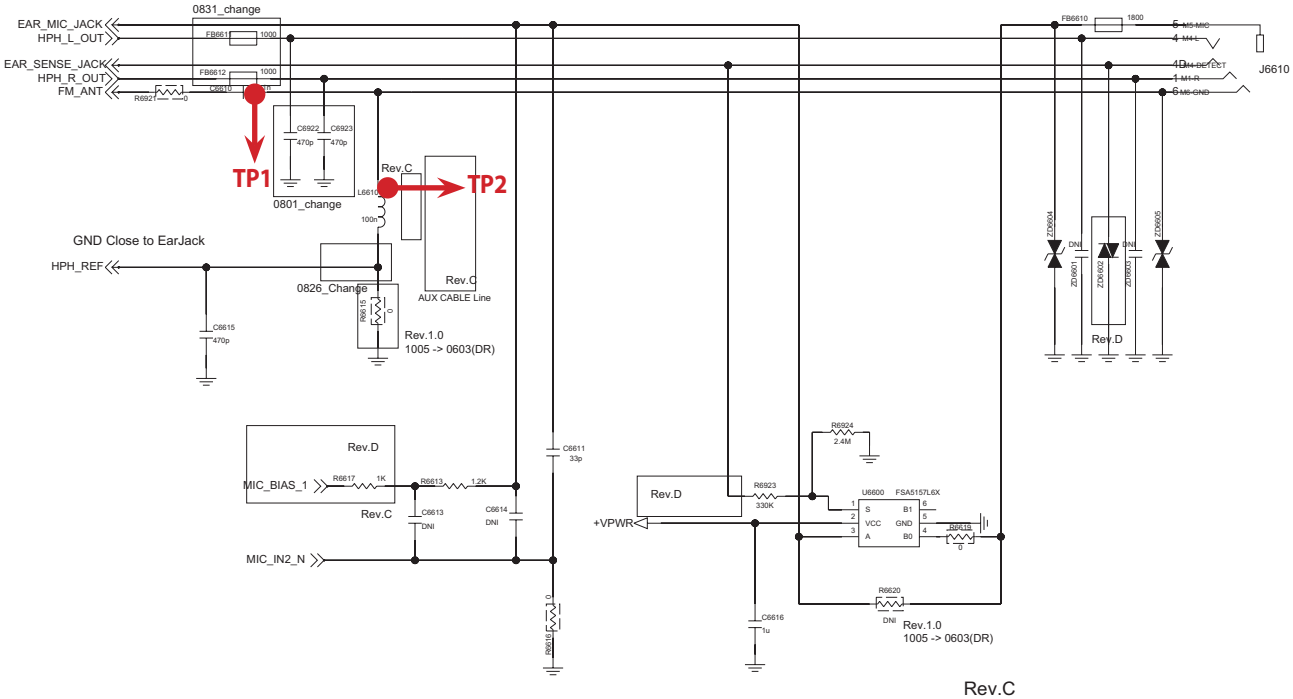

4. DOWNLOAD

TOOL INFORMATION			
TOOL VERSION	DLL NAME	USB DRIVER	
LGFLASHv160	LGD160_20140214_LGFLASHv160_Download	LGUnitedMobileDriver_S4981MAN38AP22_ML_WHQL_Ver_3.8.1	
Please Check the Version to "B2B"			
H/W			
	Name	Part No.	Software
D/L Cable	Micro 5P (56-open-910K) USB DLC	RAD32167835	TOT

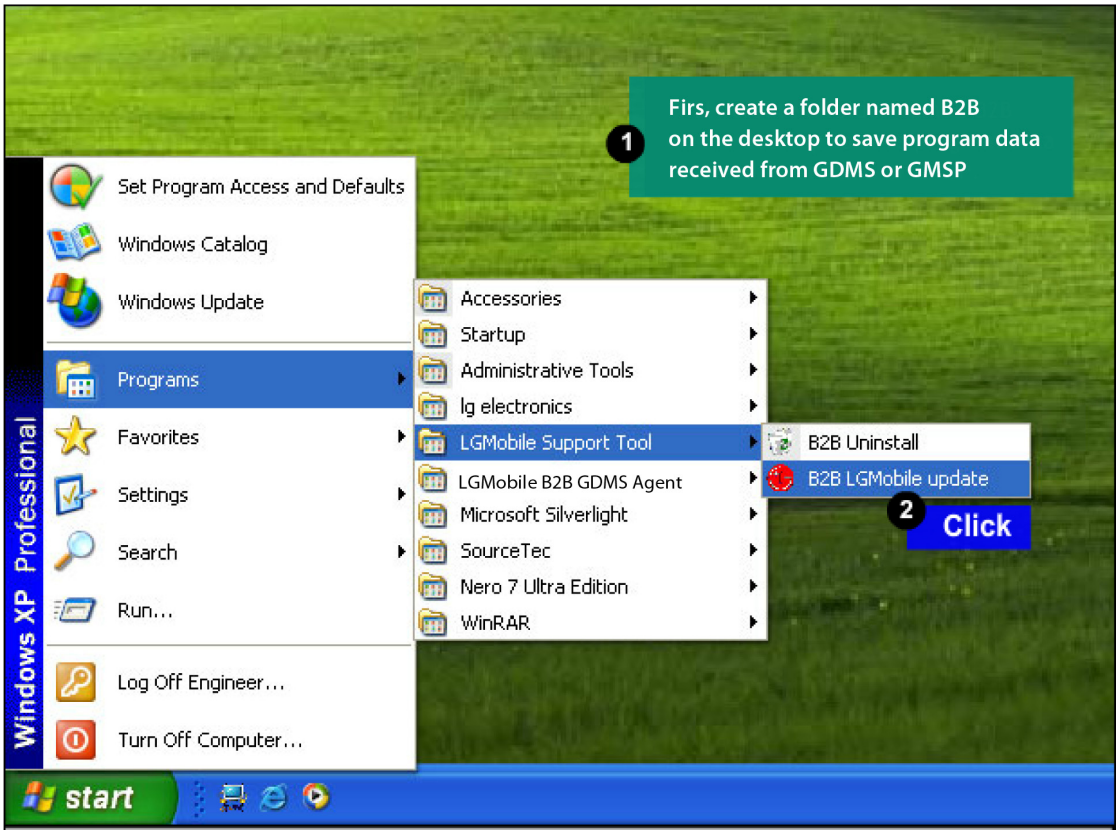

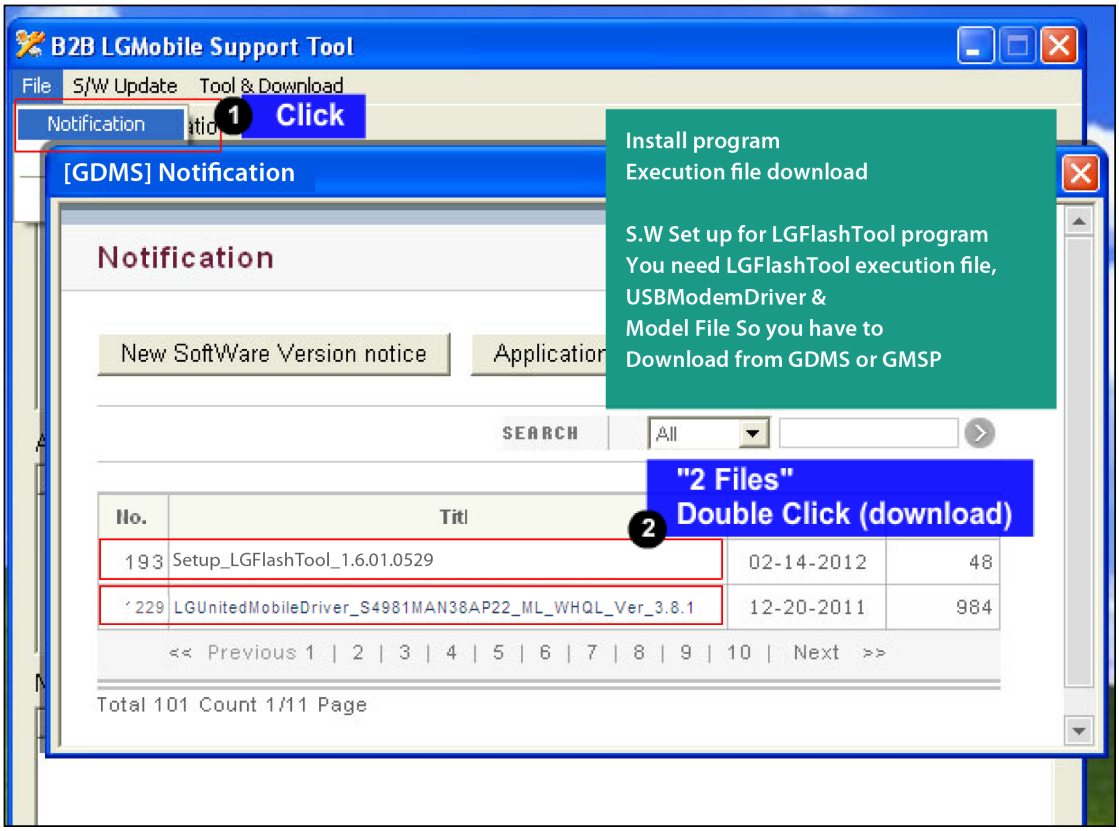

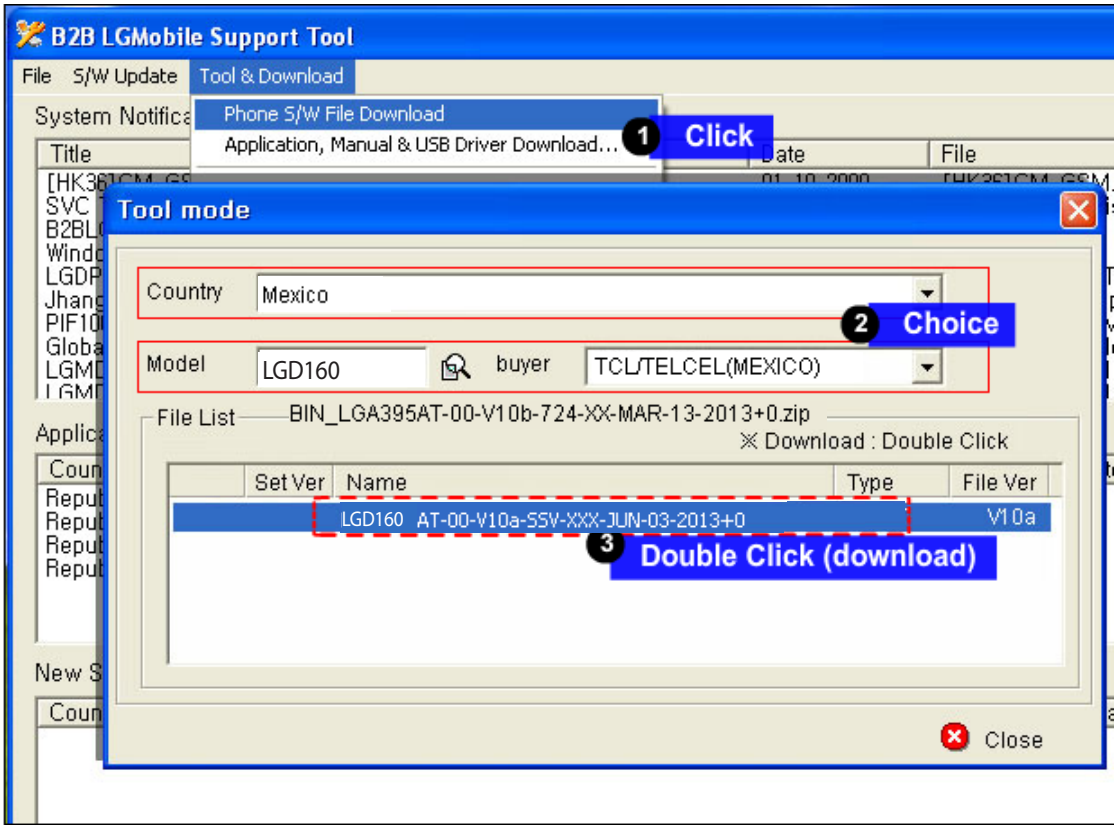

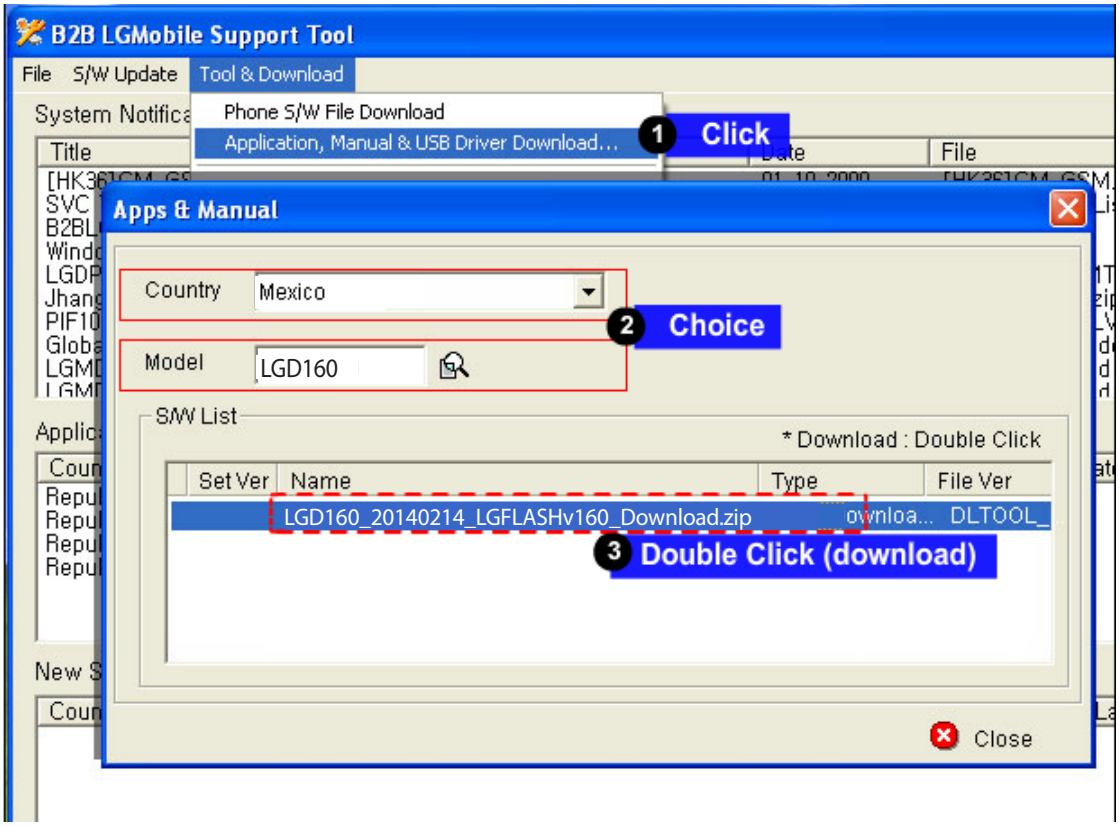

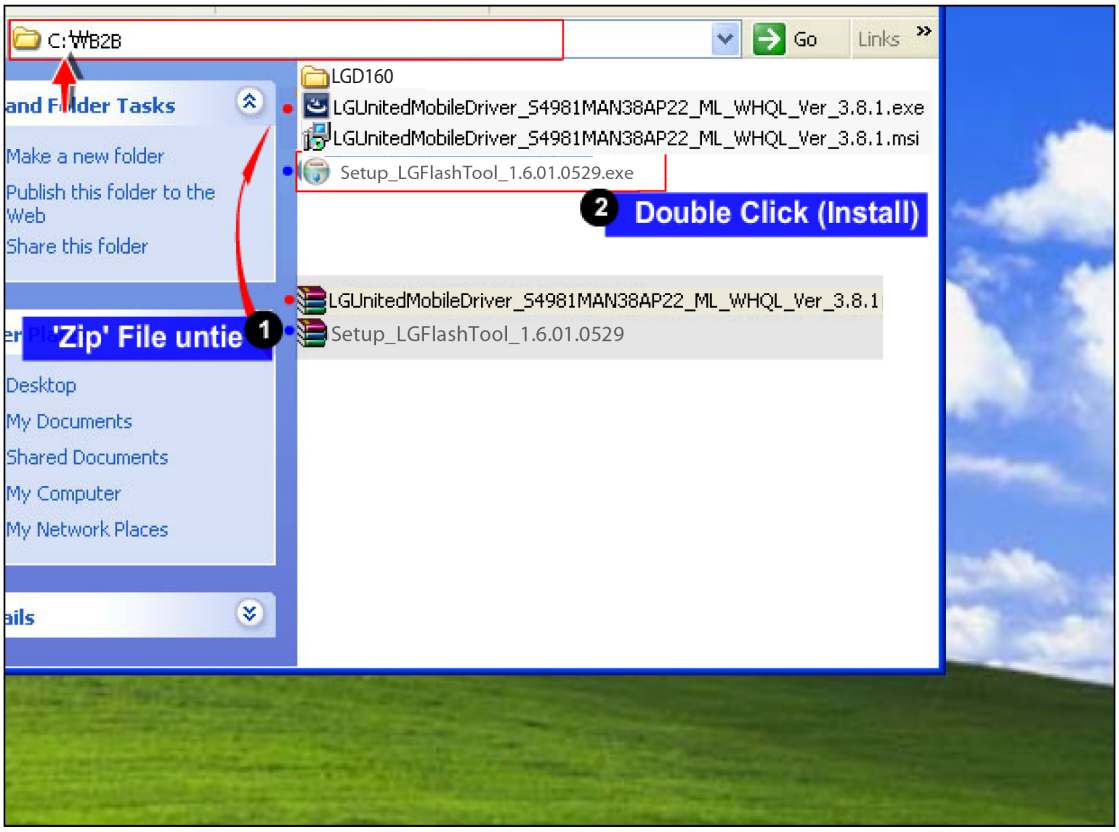

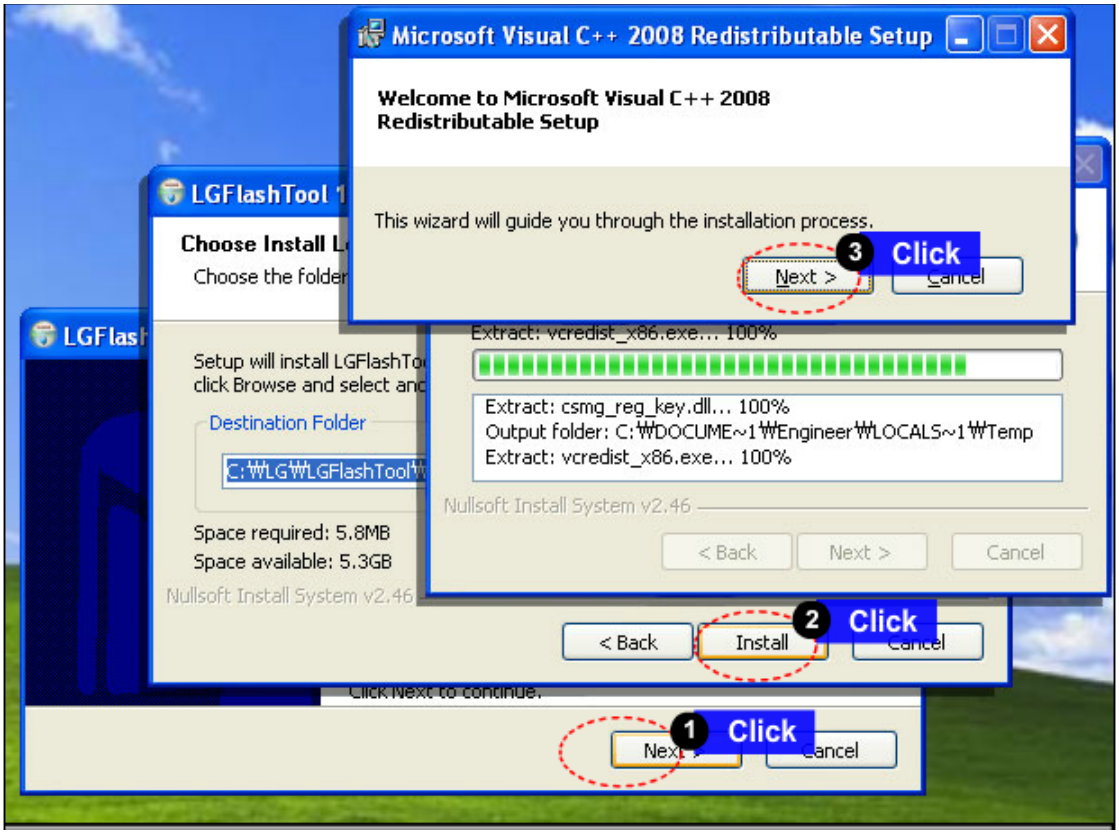

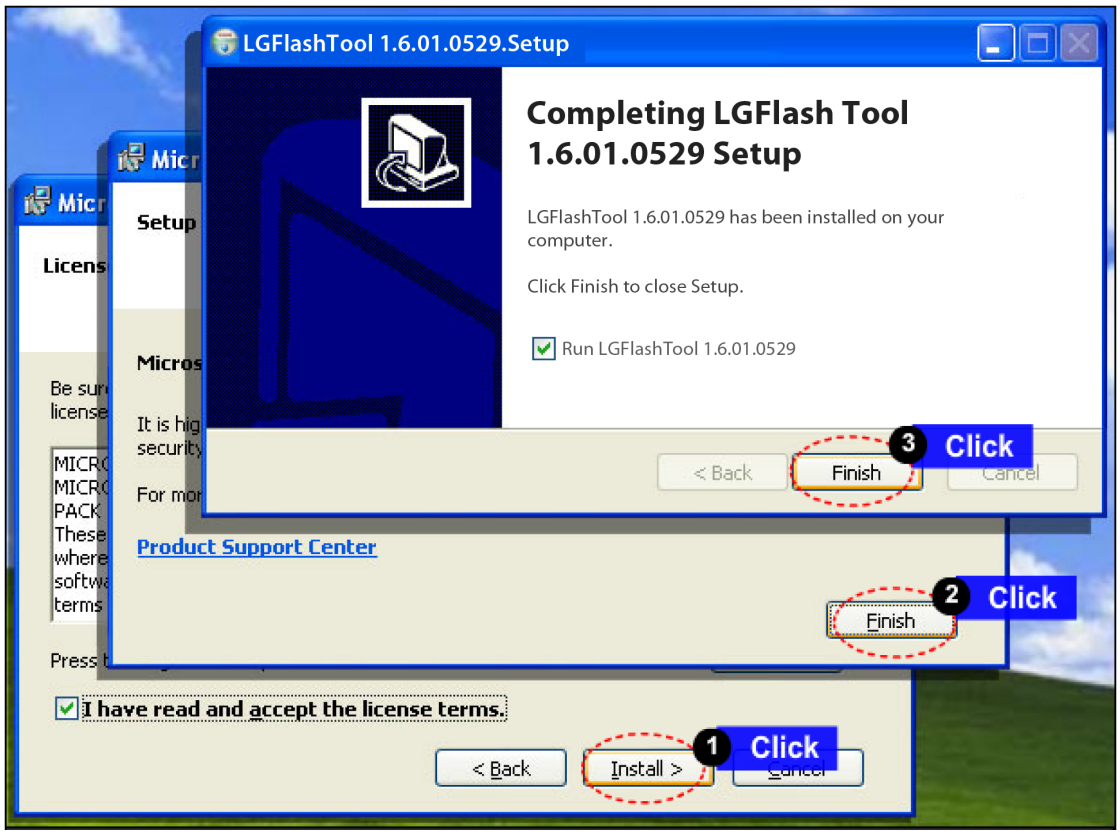

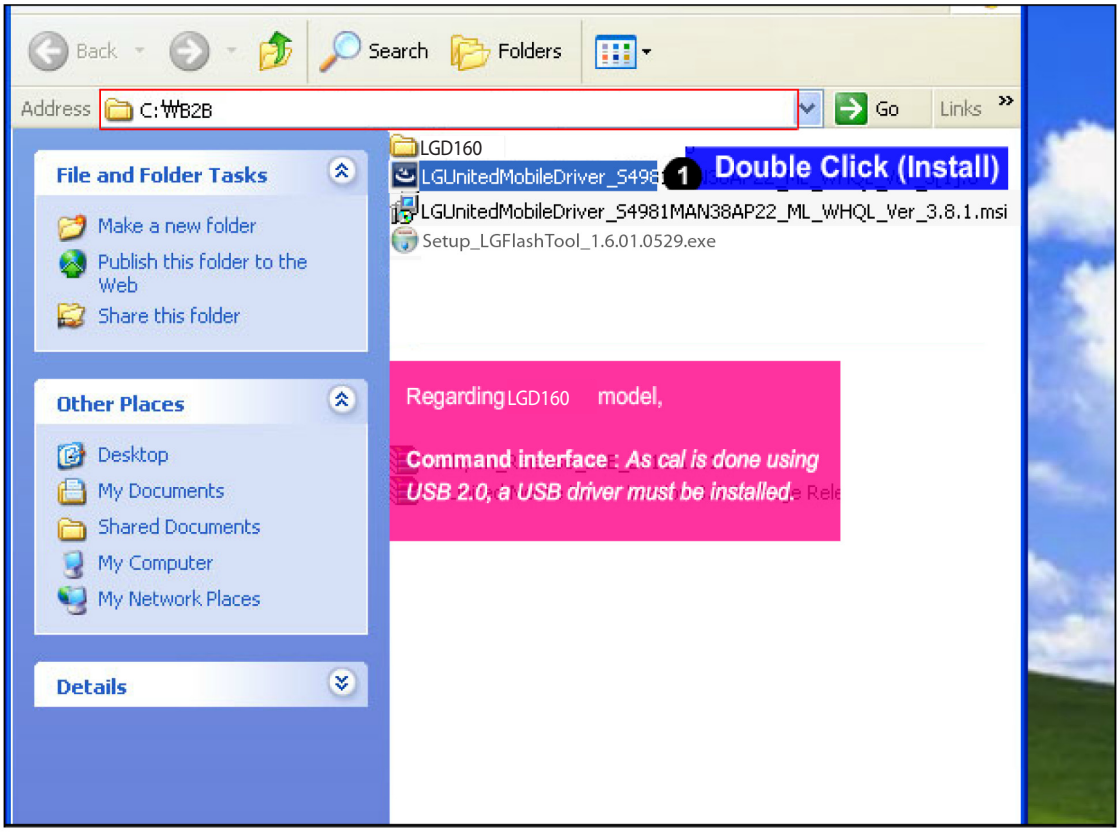

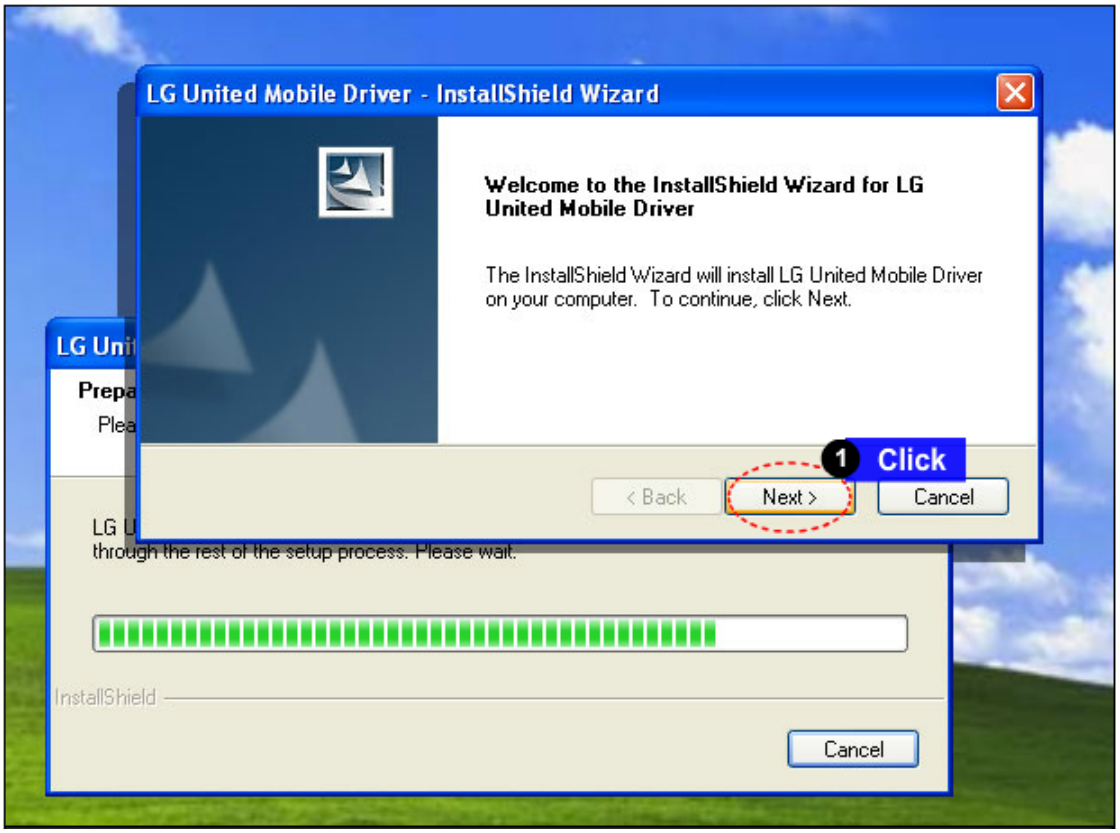

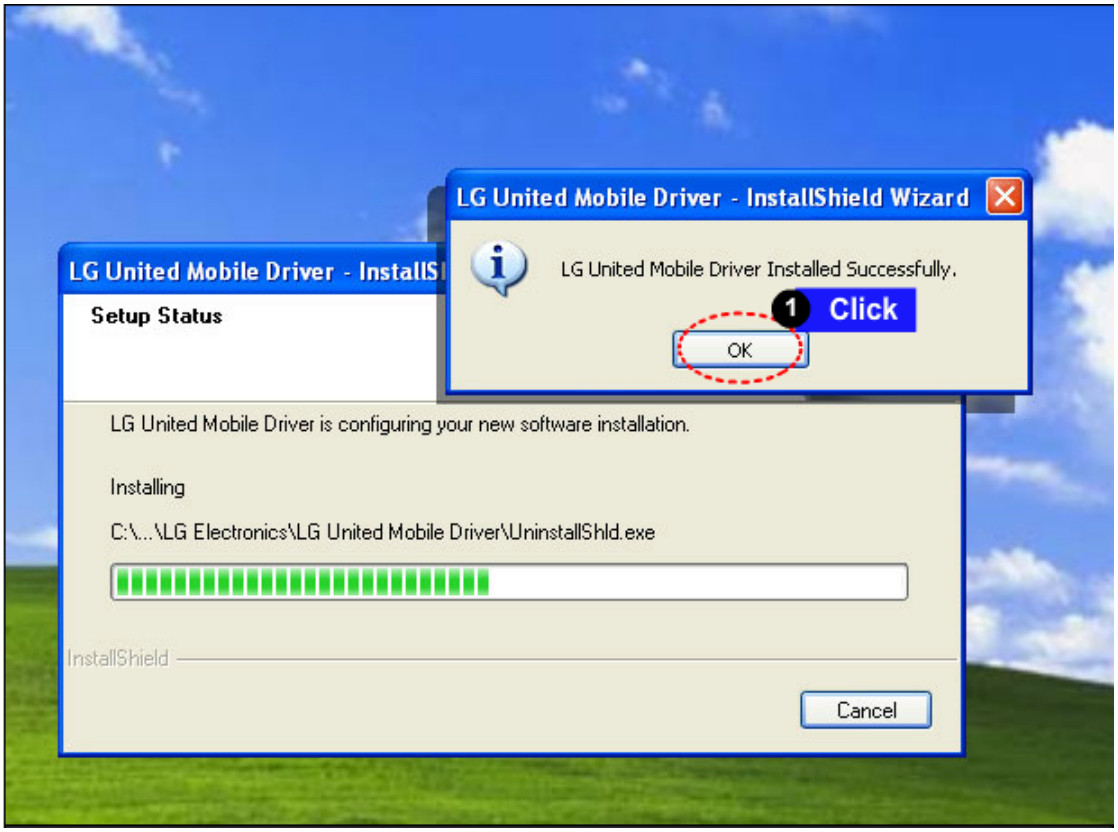

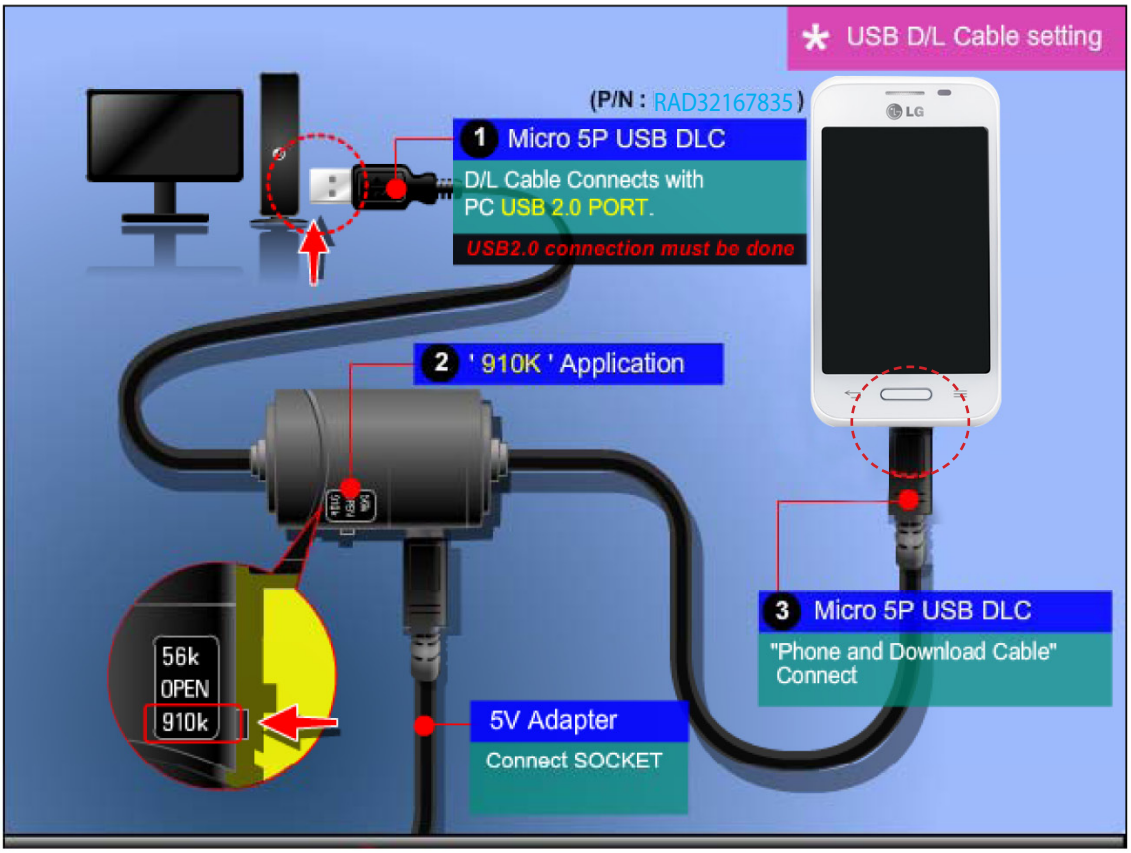

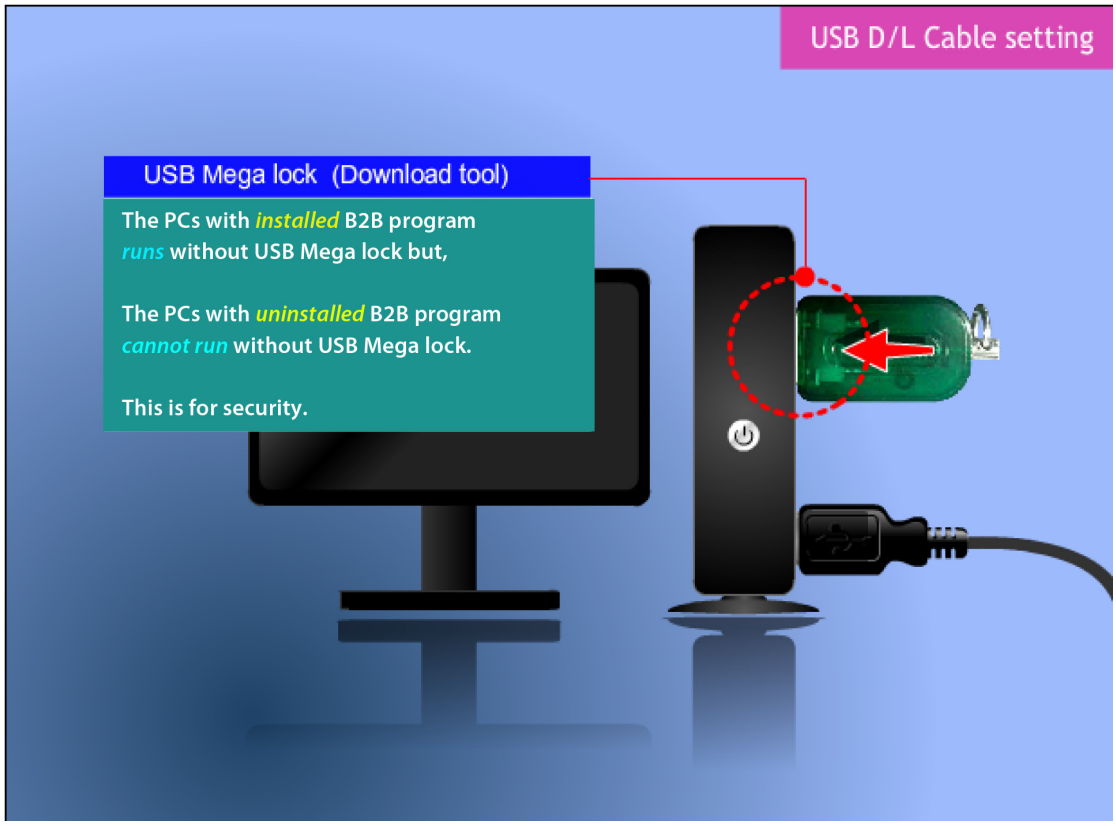

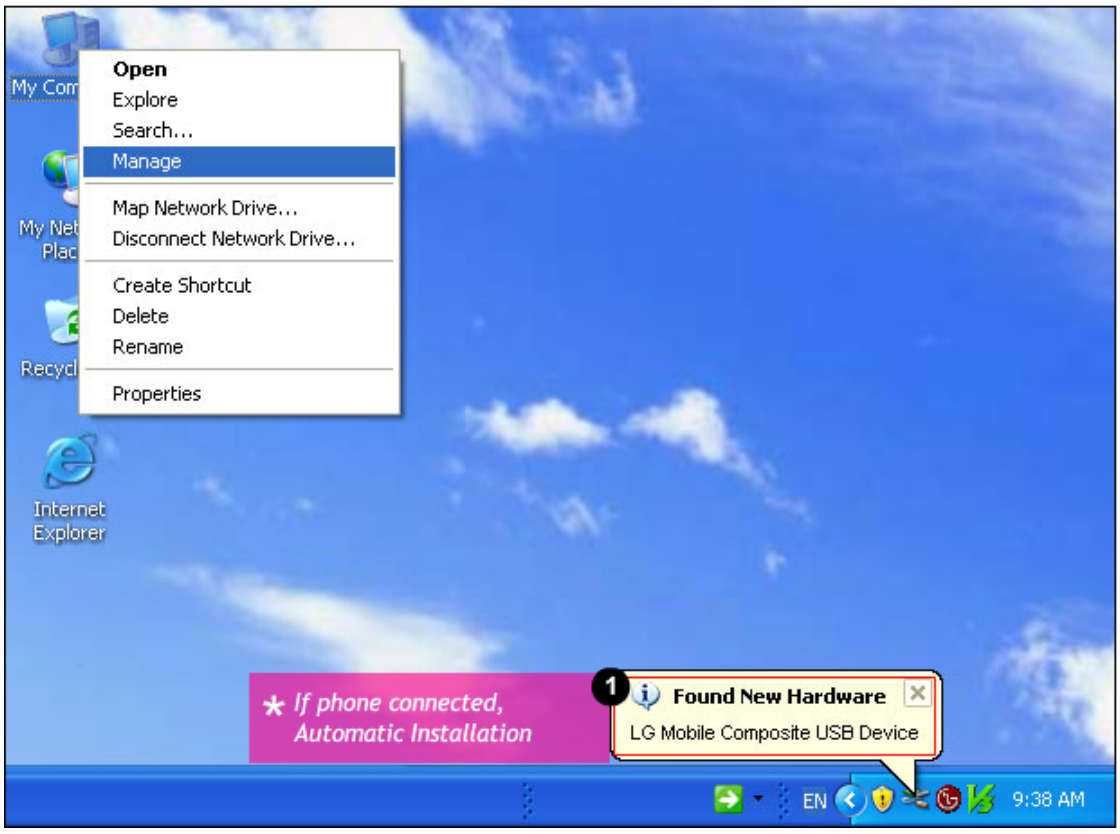

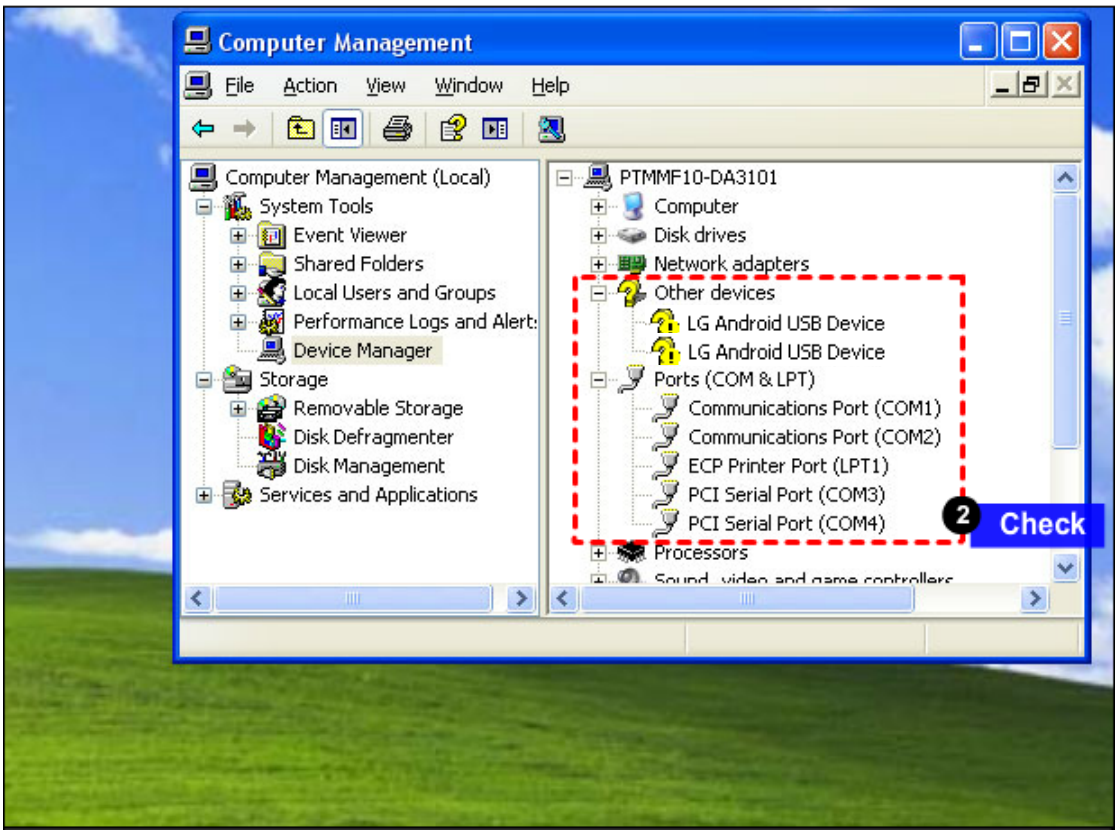

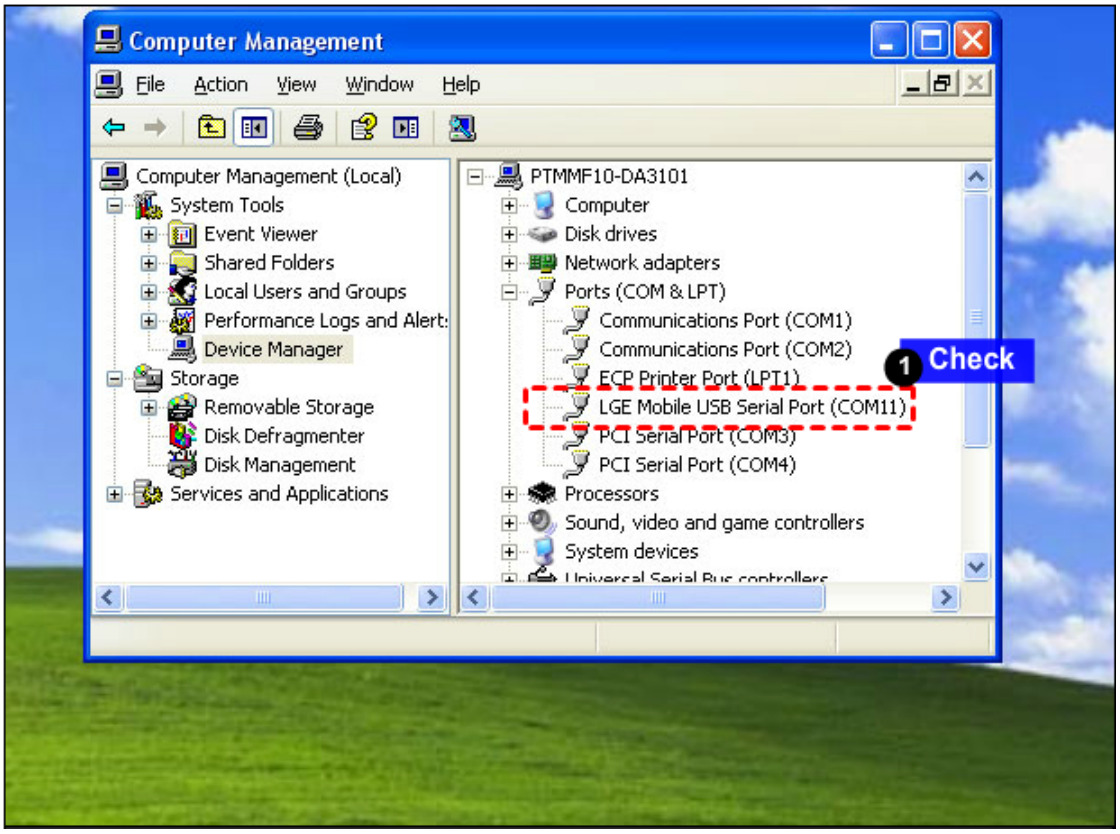

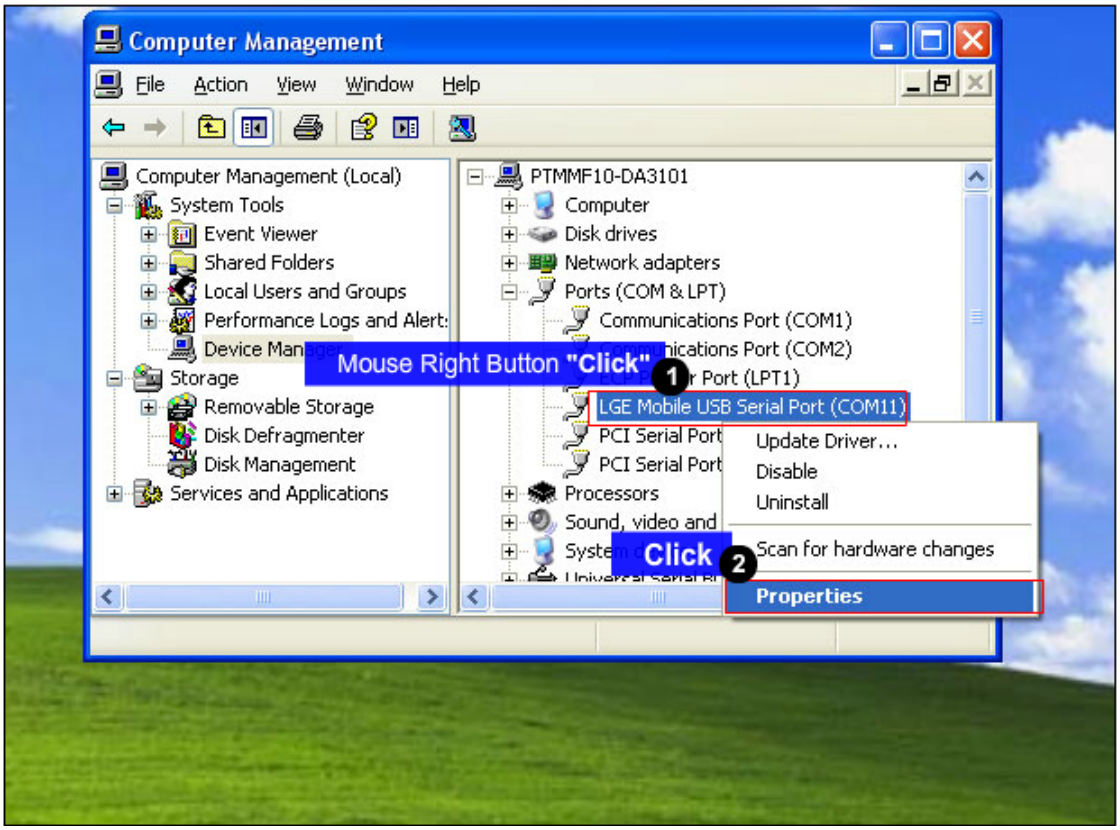

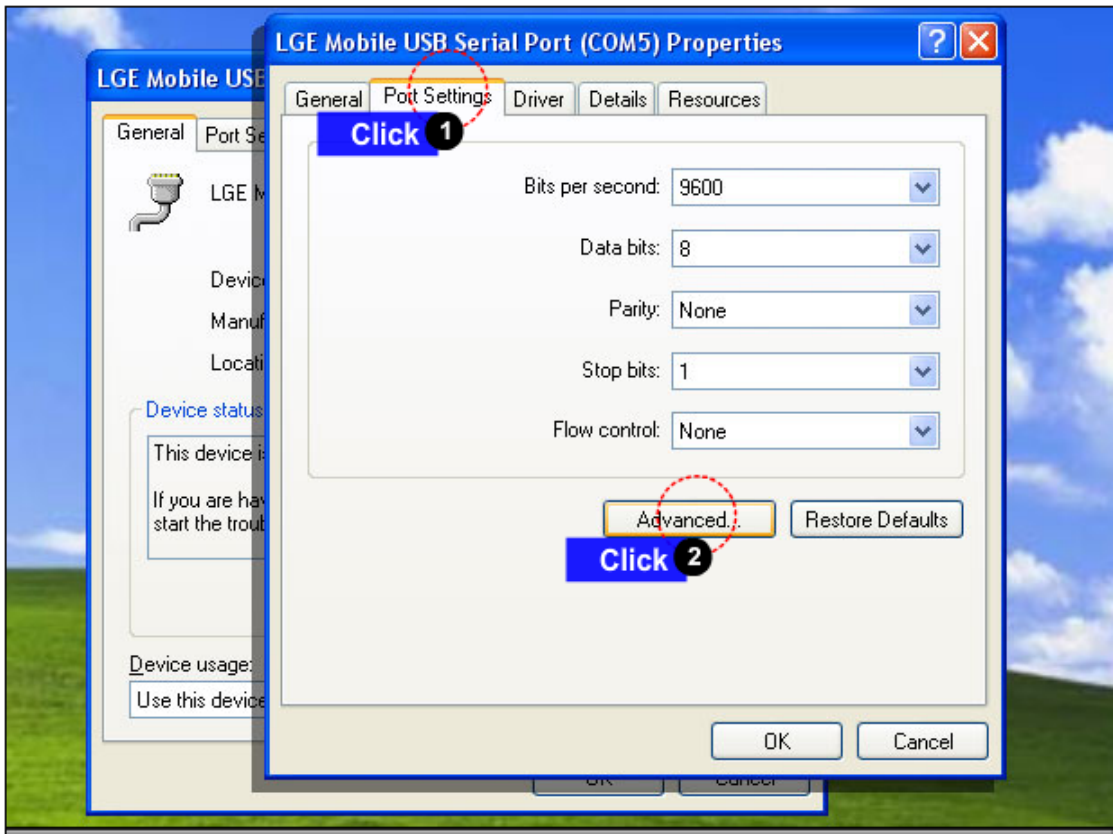

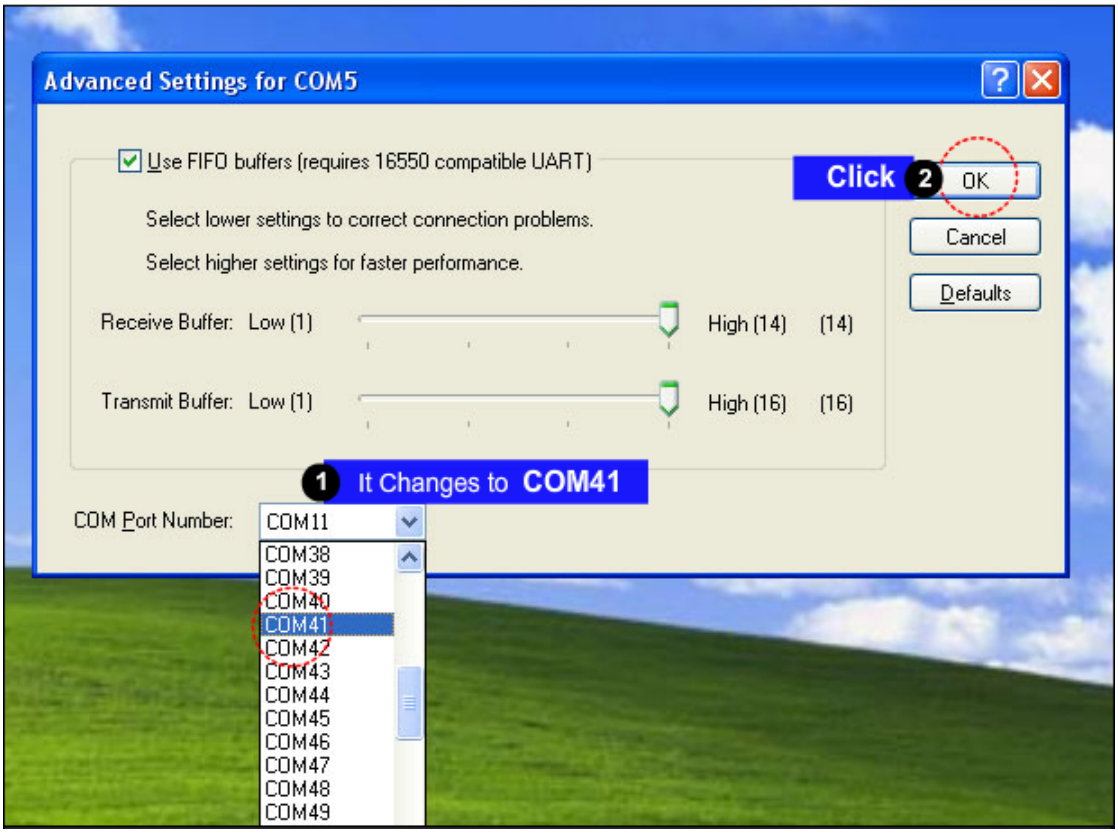

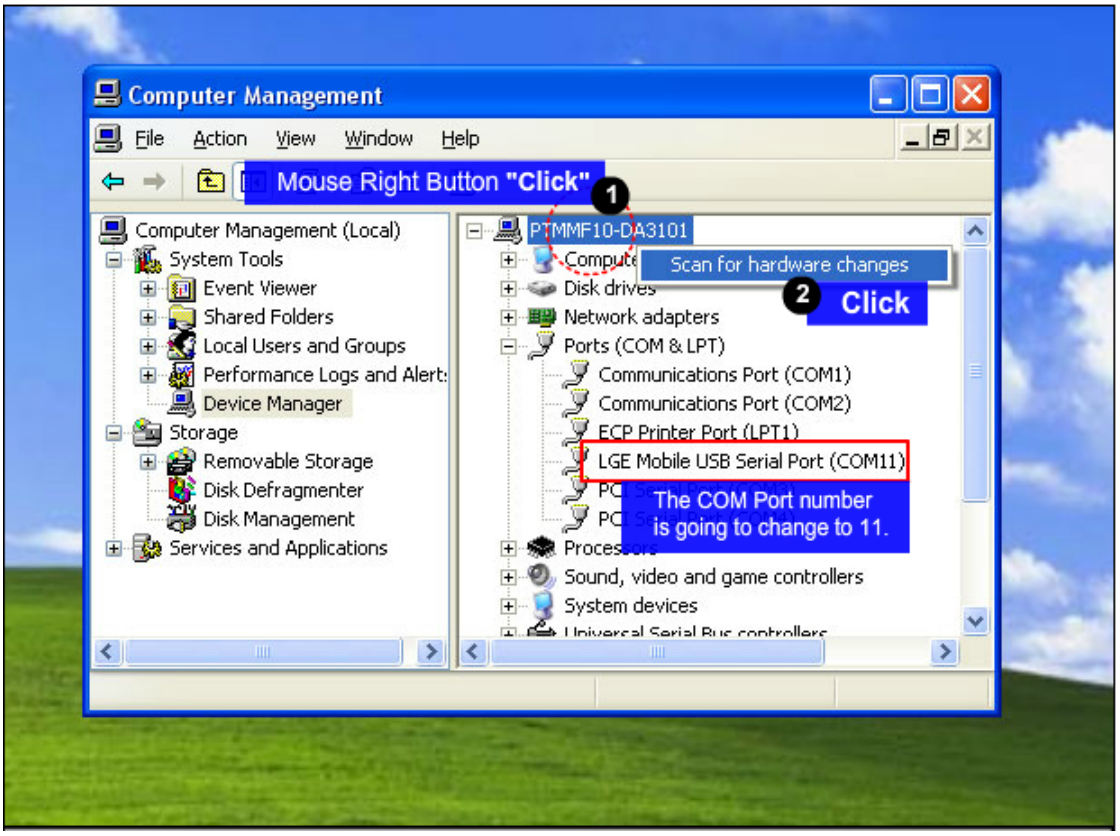

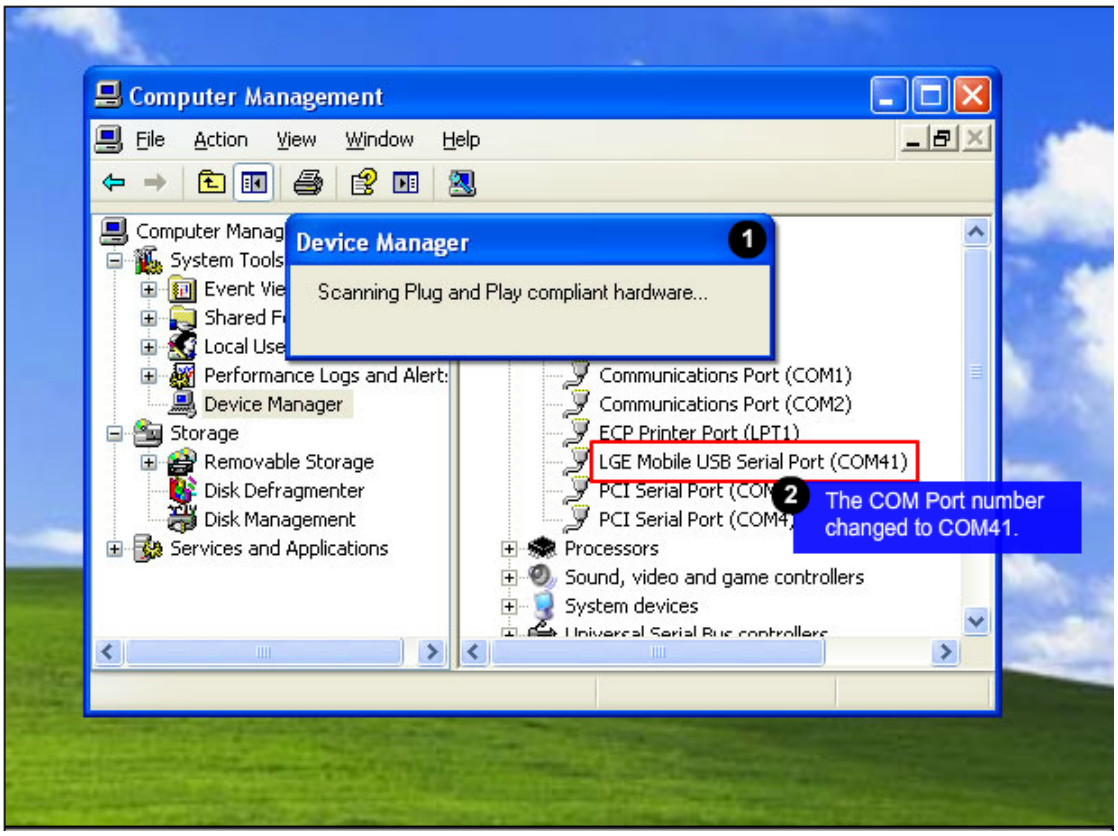

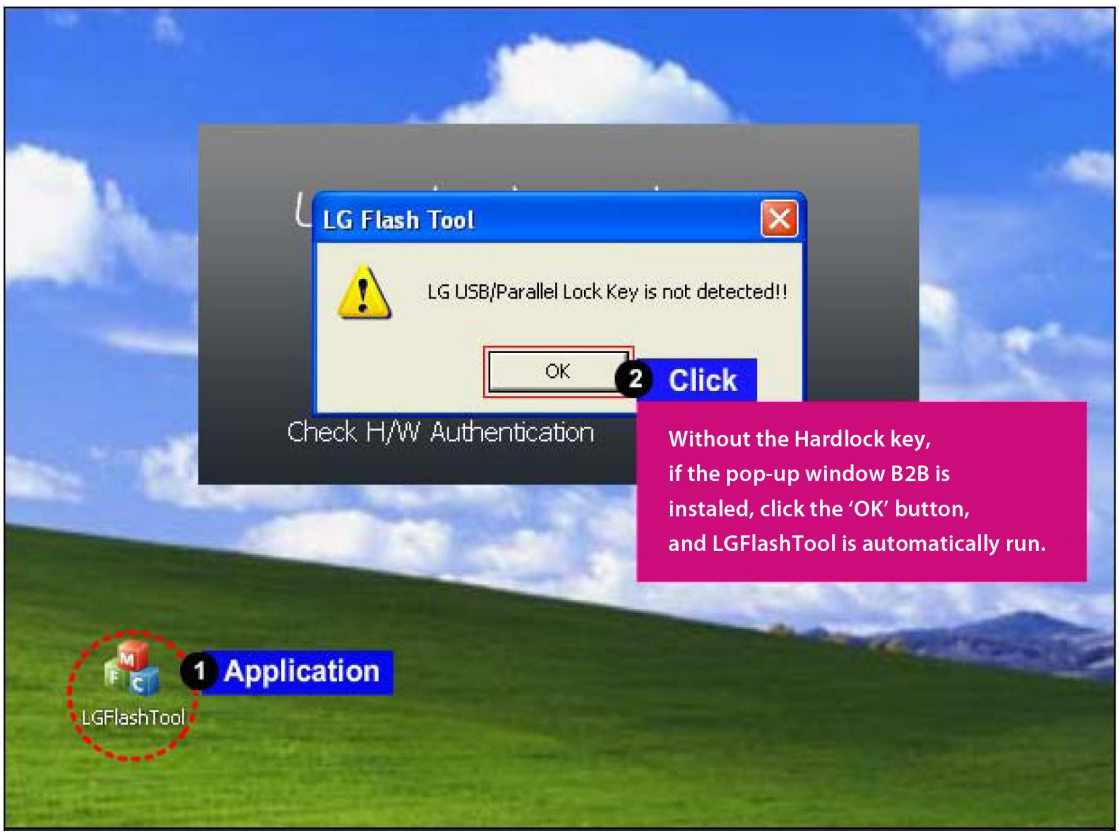

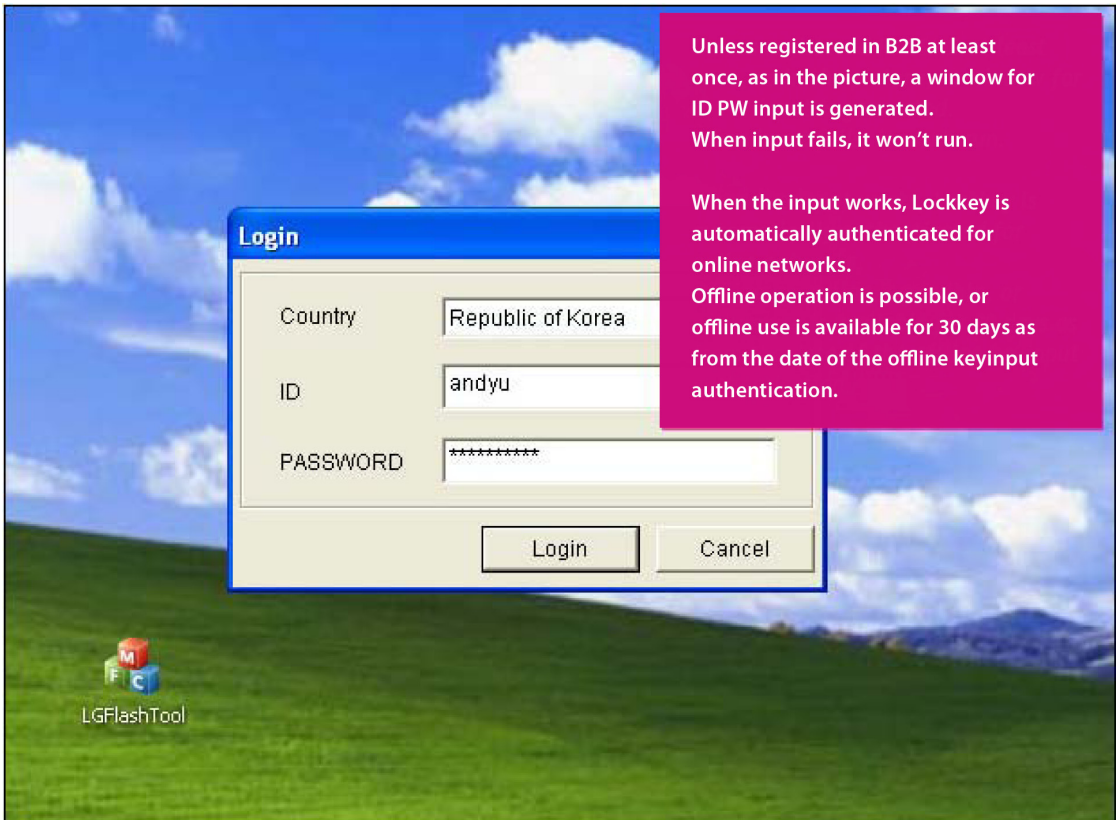

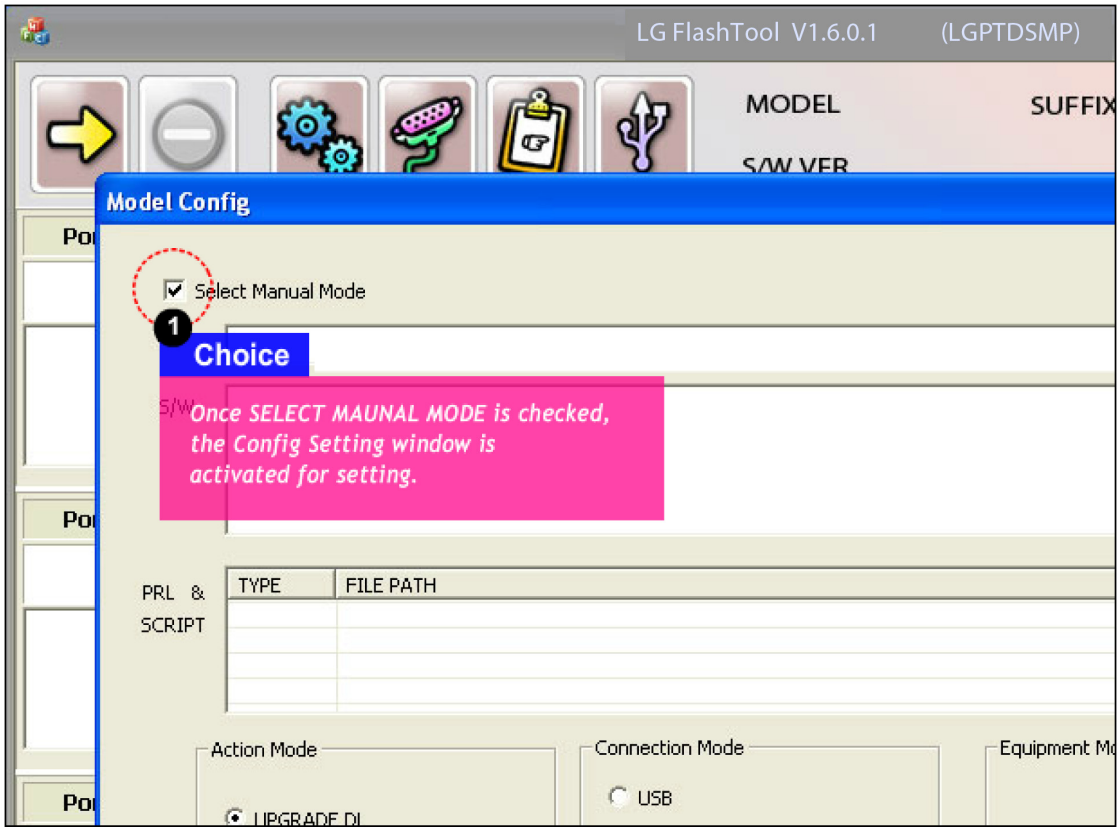

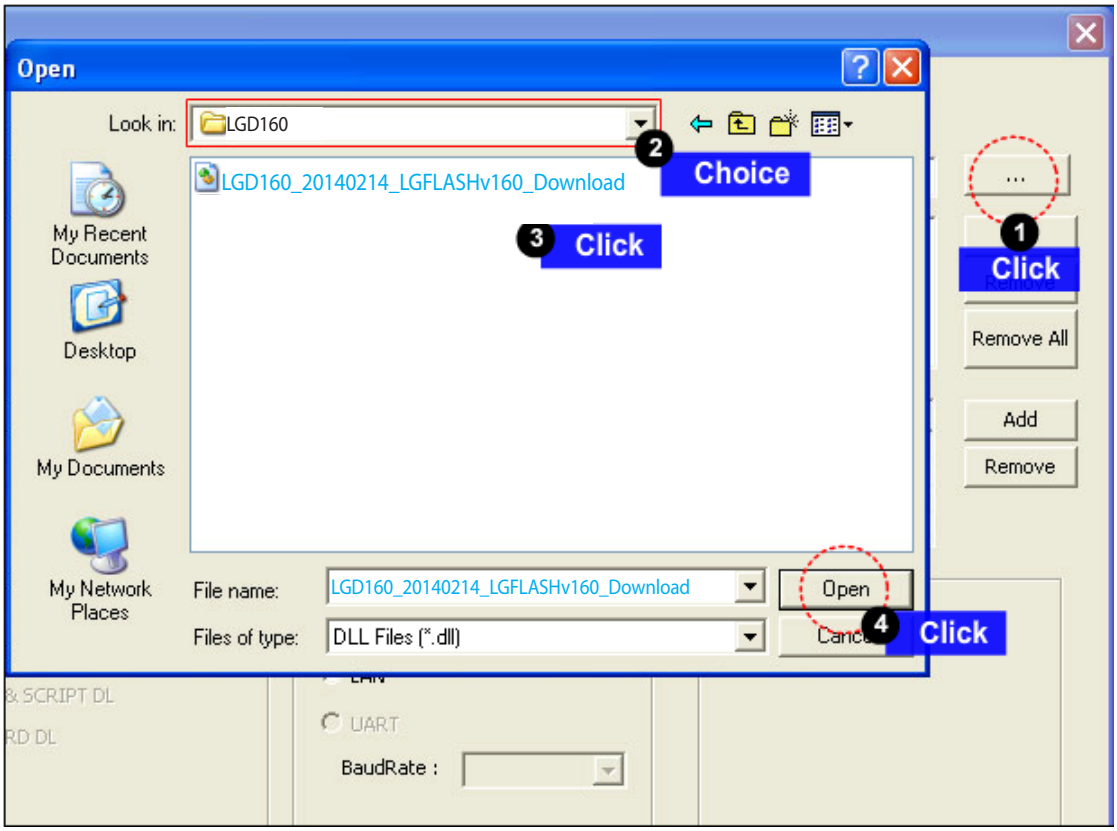

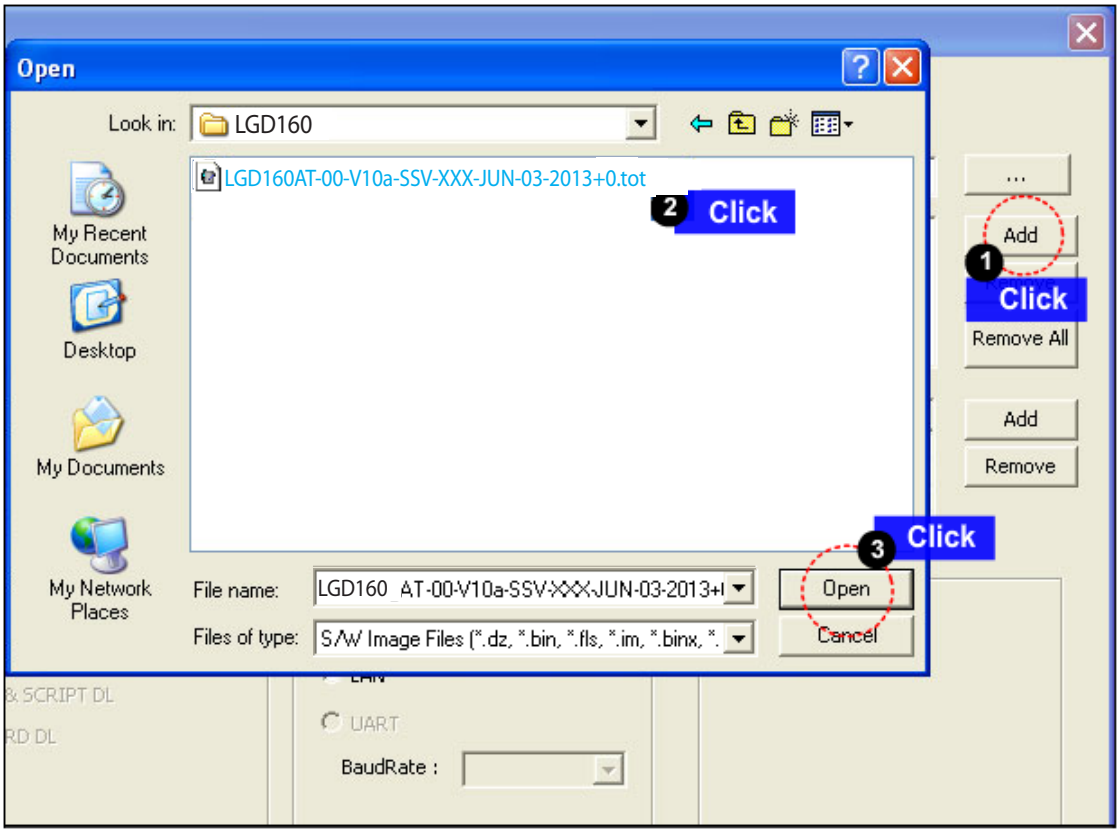

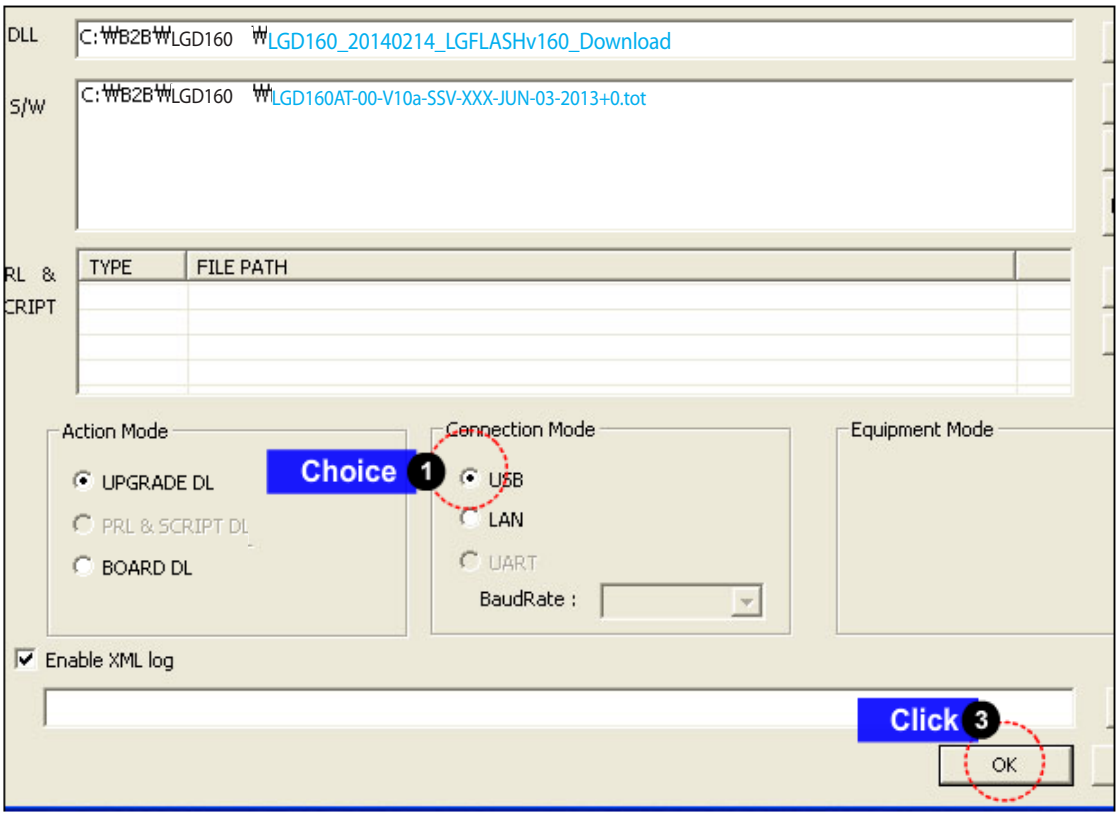

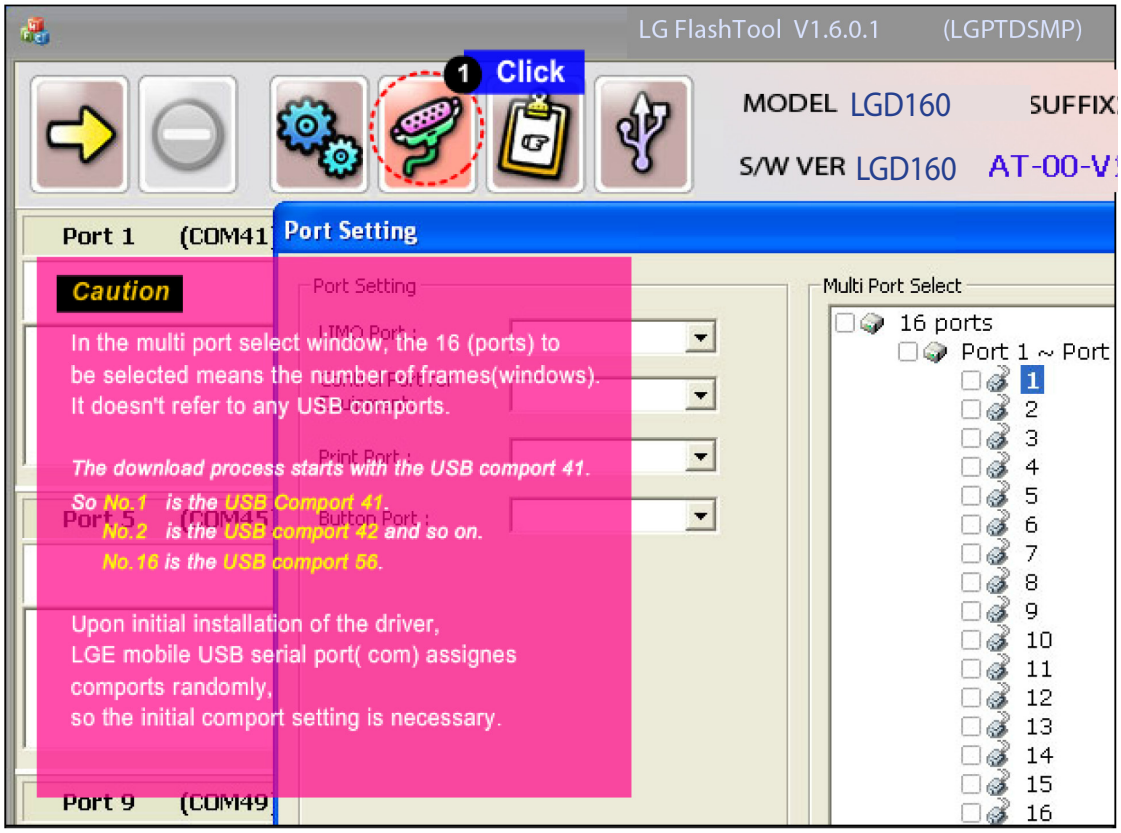

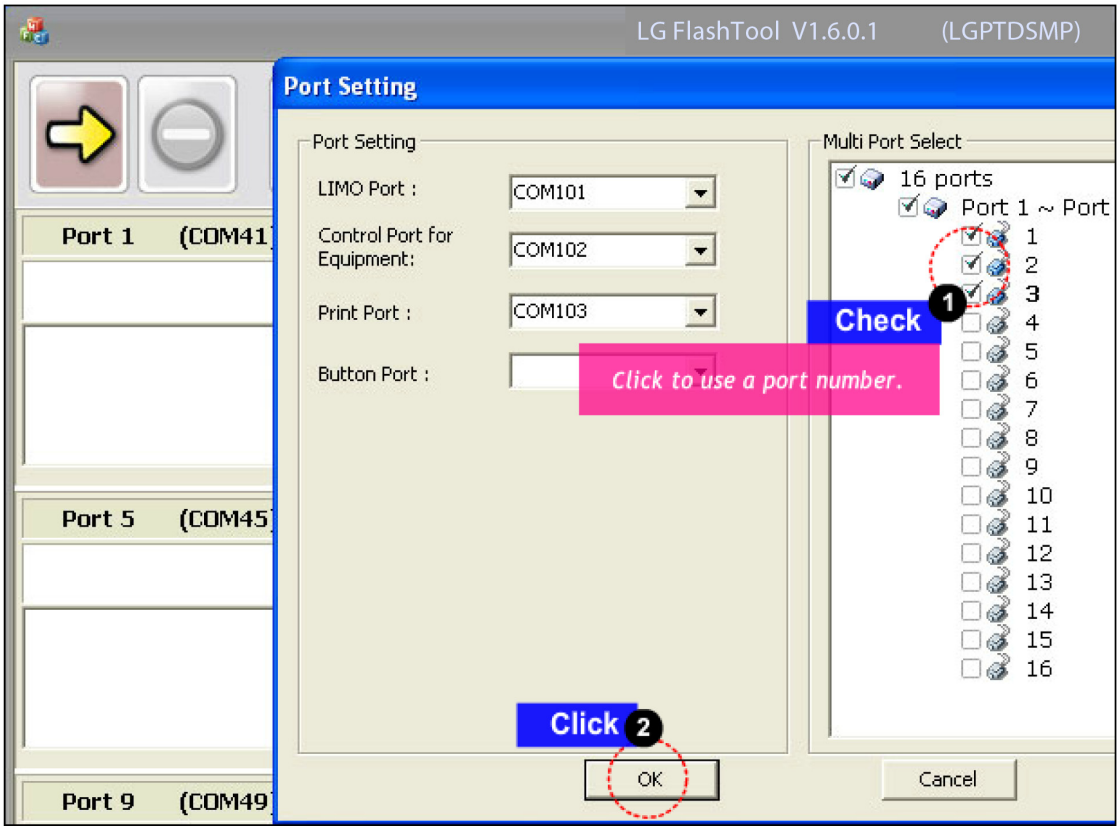

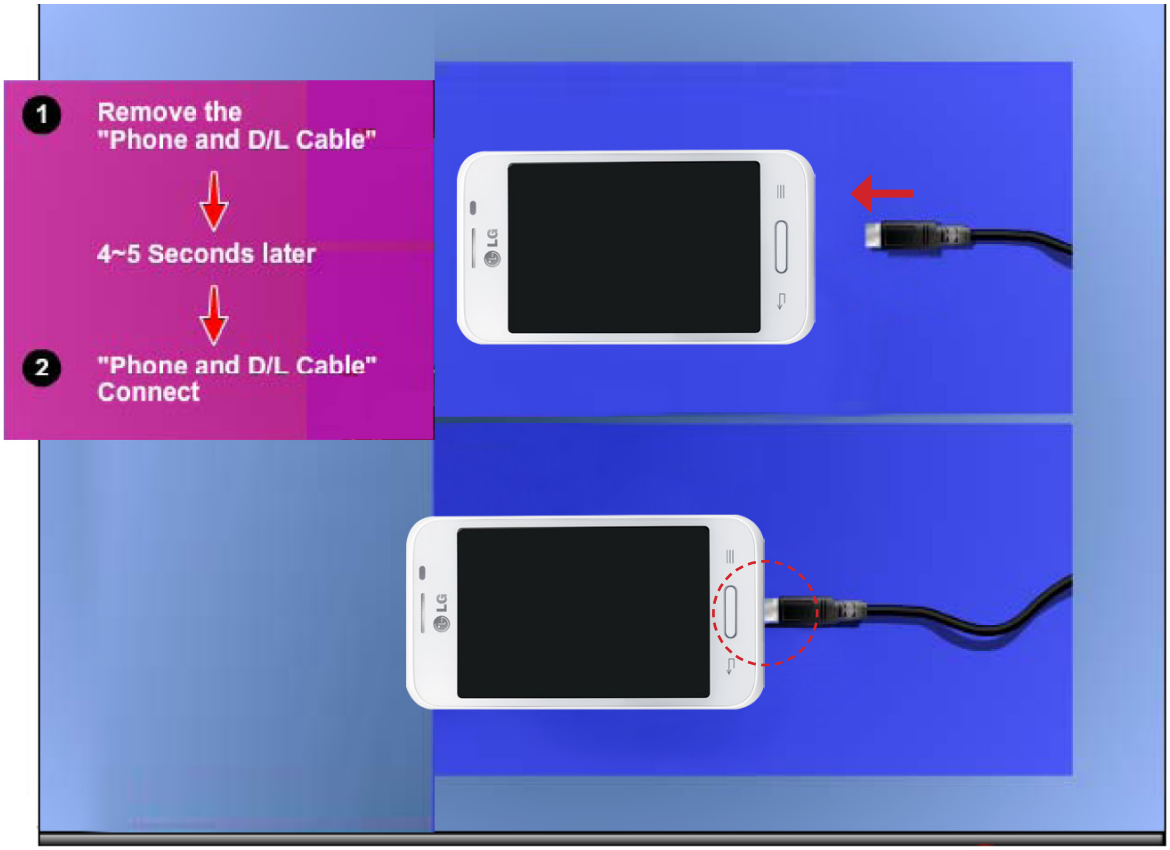

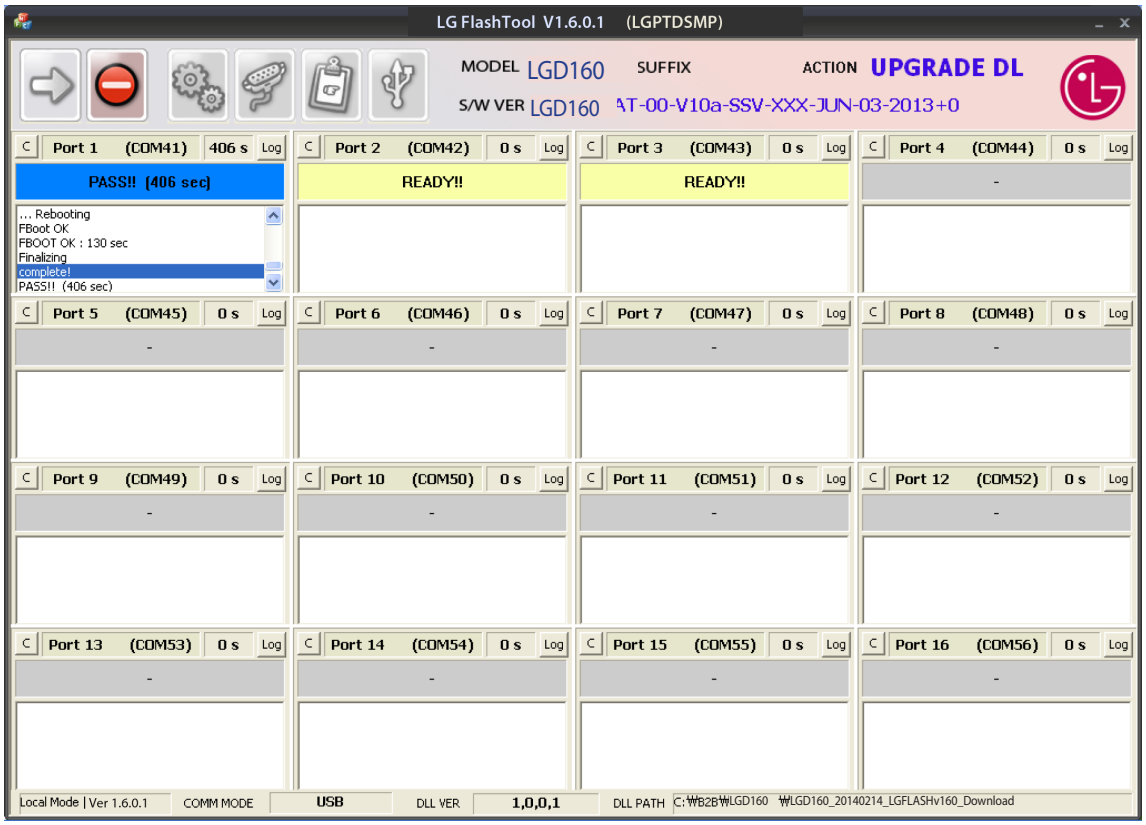

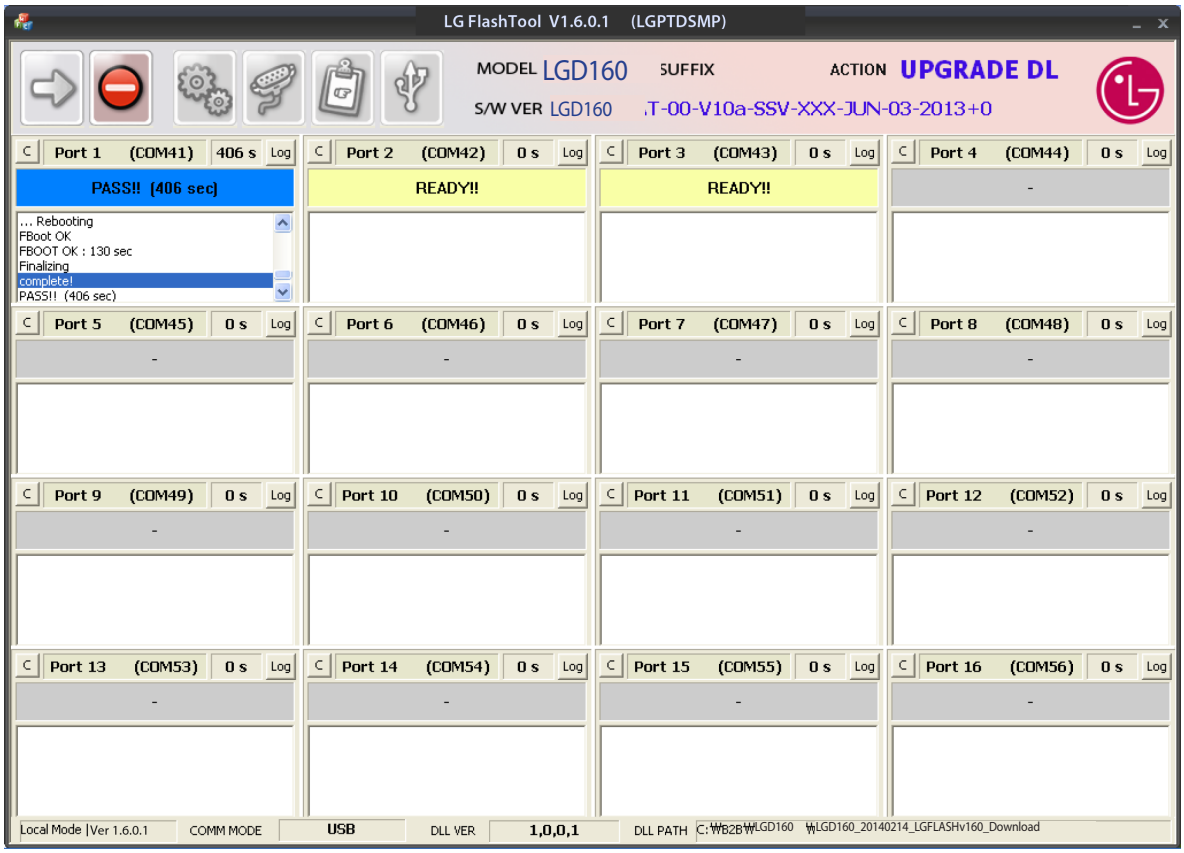

5. BLOCK DIAGRAM

[D160] Total Block Diagram

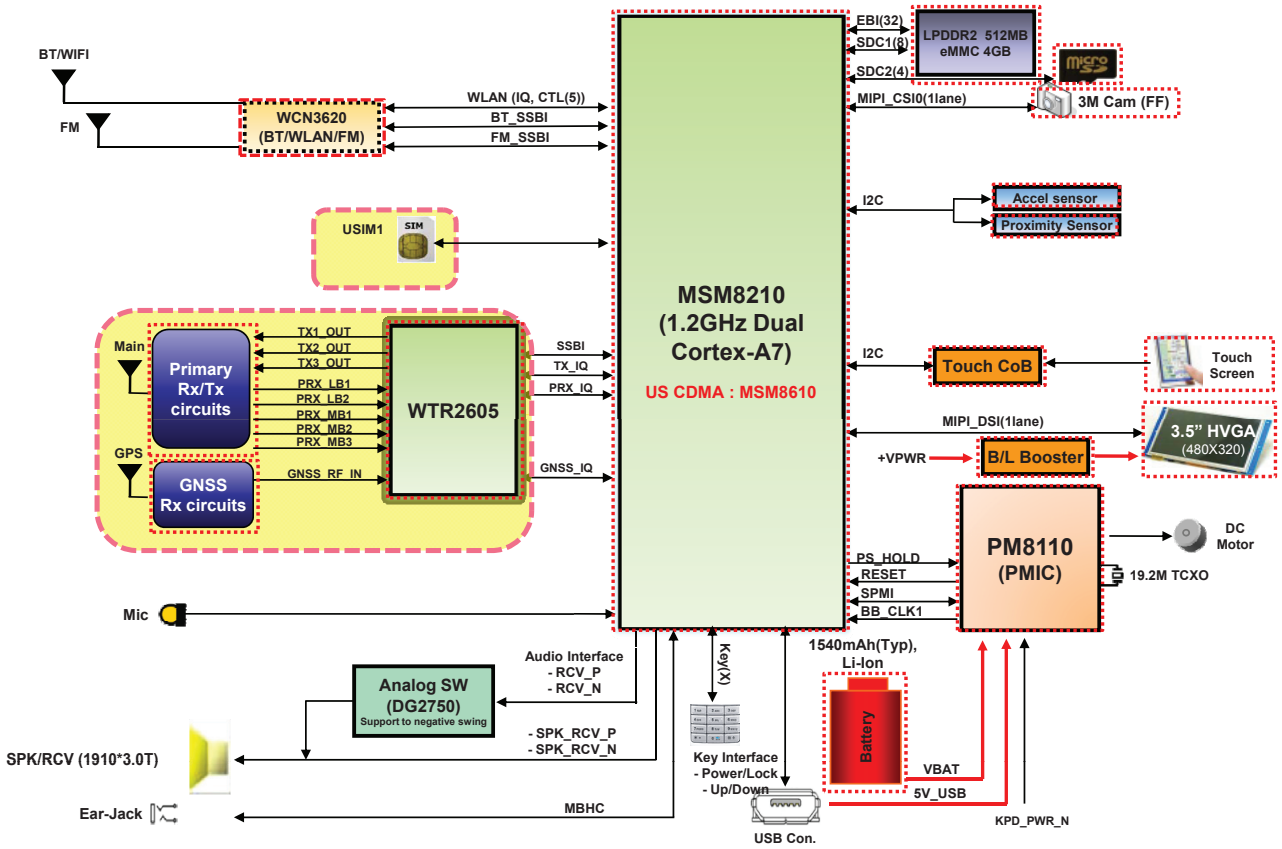

[D160] Block Diagram - Power

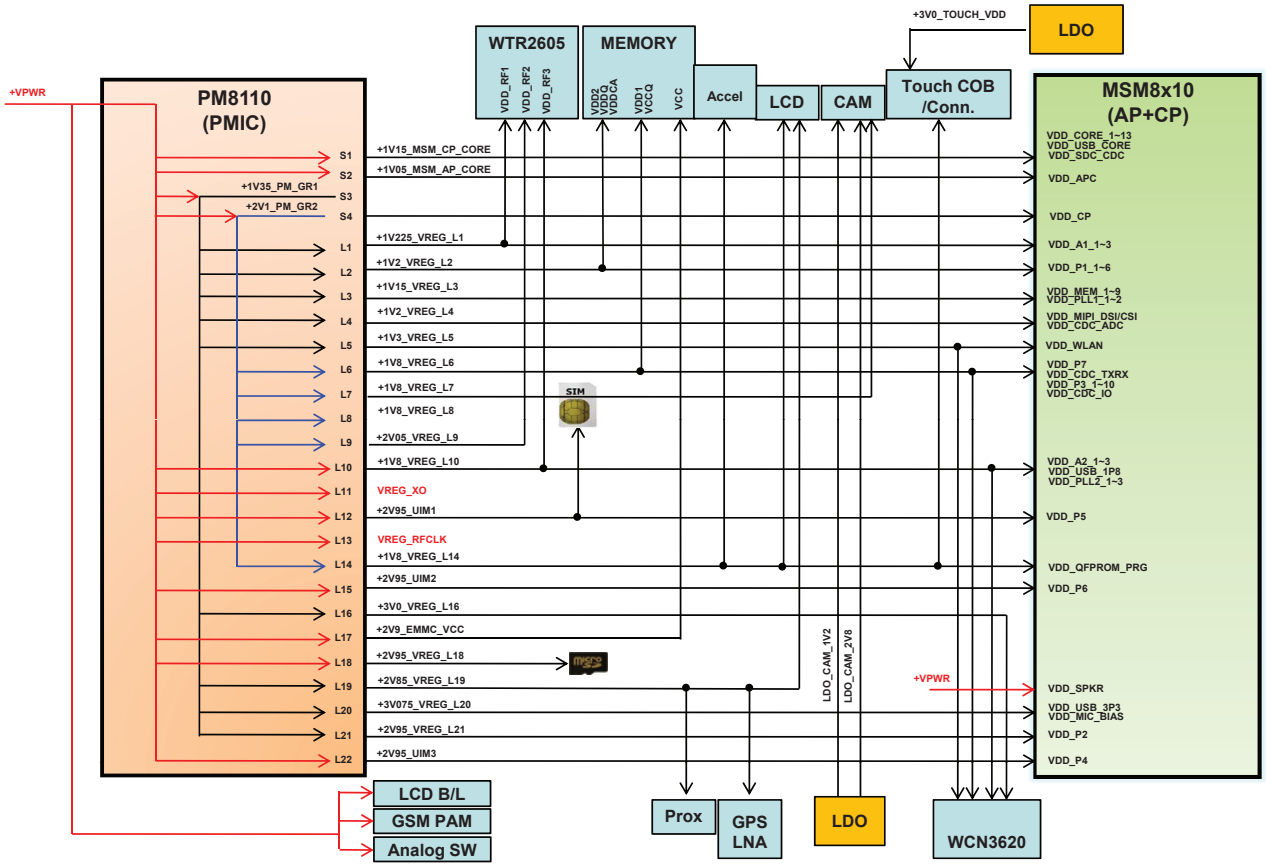

[D160] Block Diagram - Clock

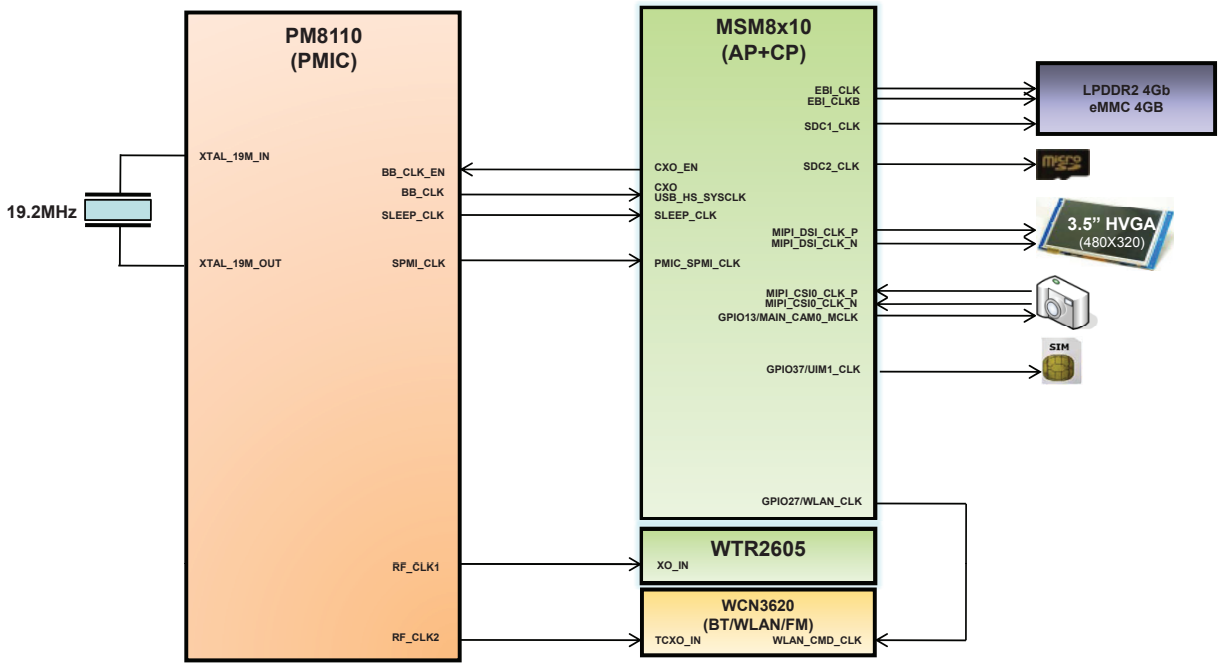

[D160] Block diagram : RF Main (3G & GSM)

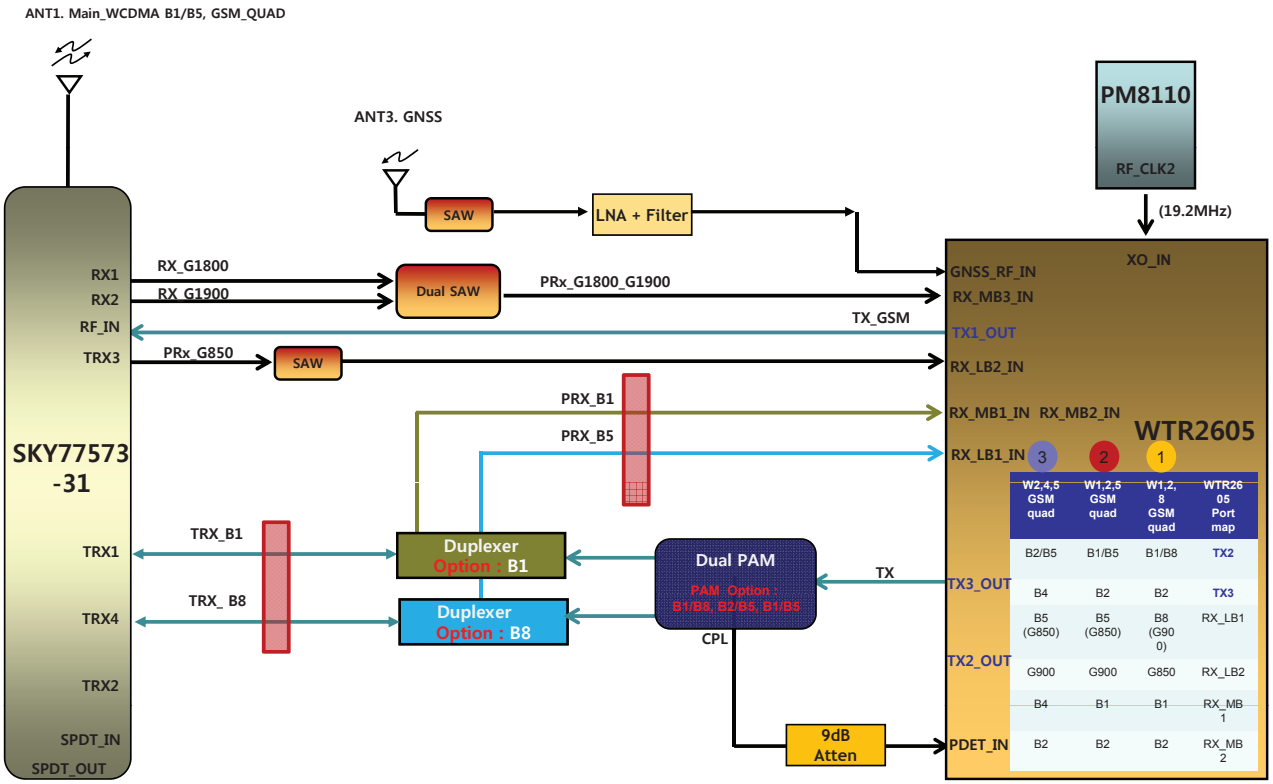

[D160] Block diagram : Connectivity(BT/WiFi/FM)

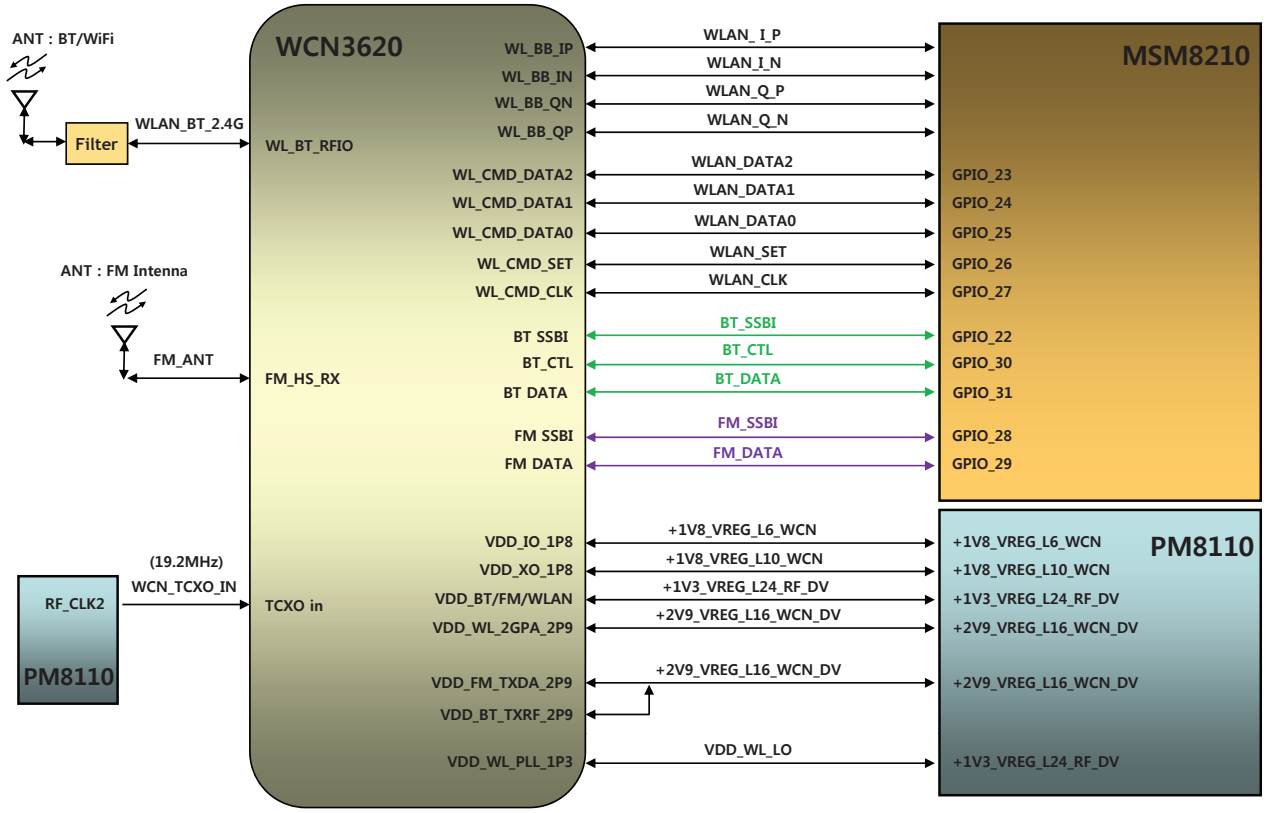

[D160] Block diagram : Audio

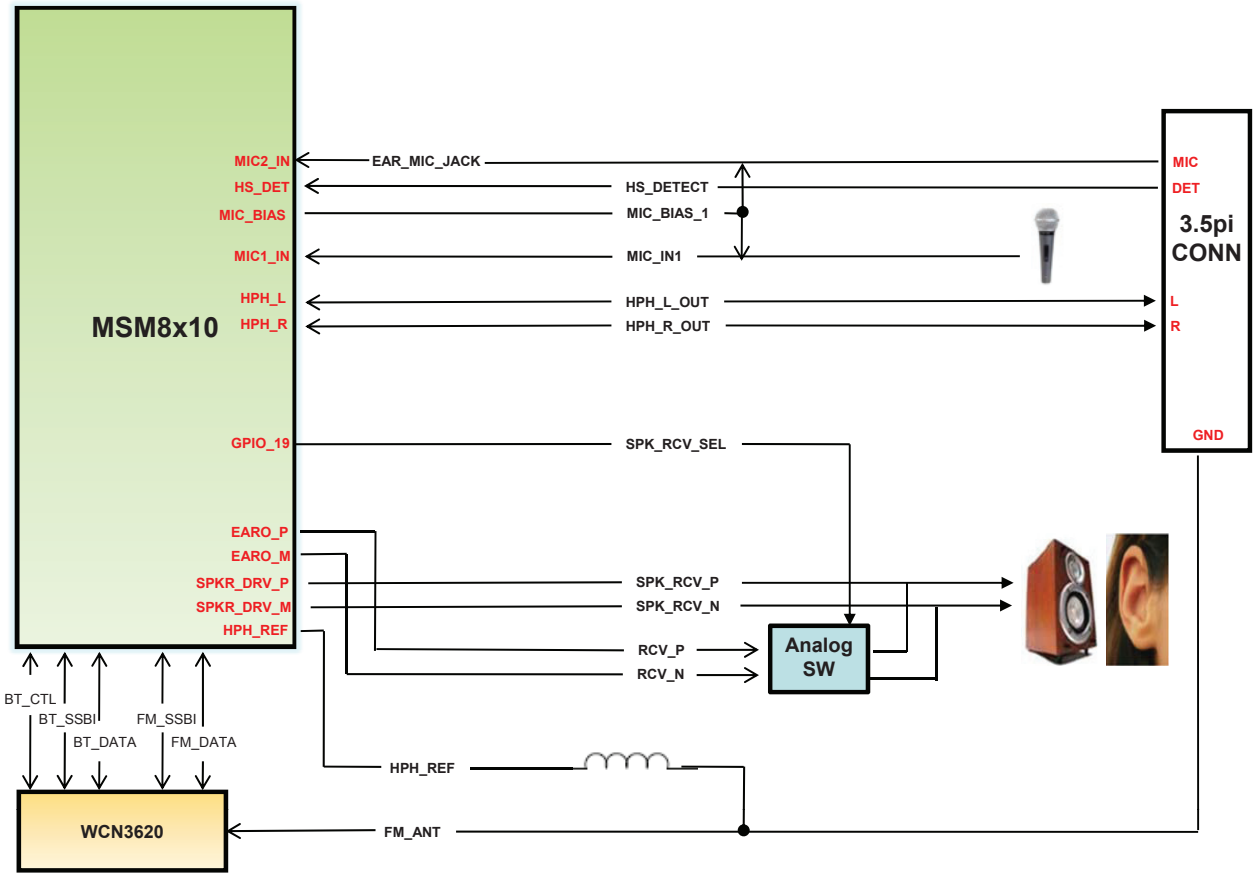

[D160] Block diagram : LCD/Camera

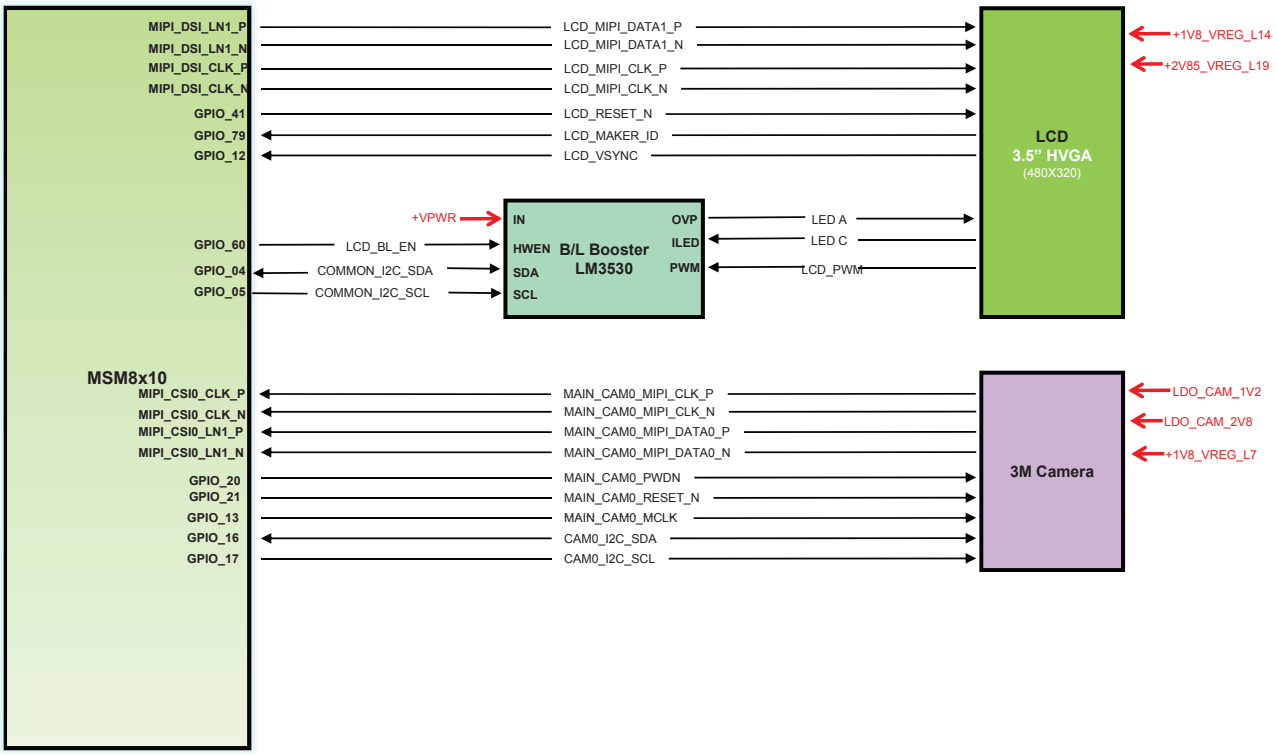

[D160] Block Diagram - Peripherals

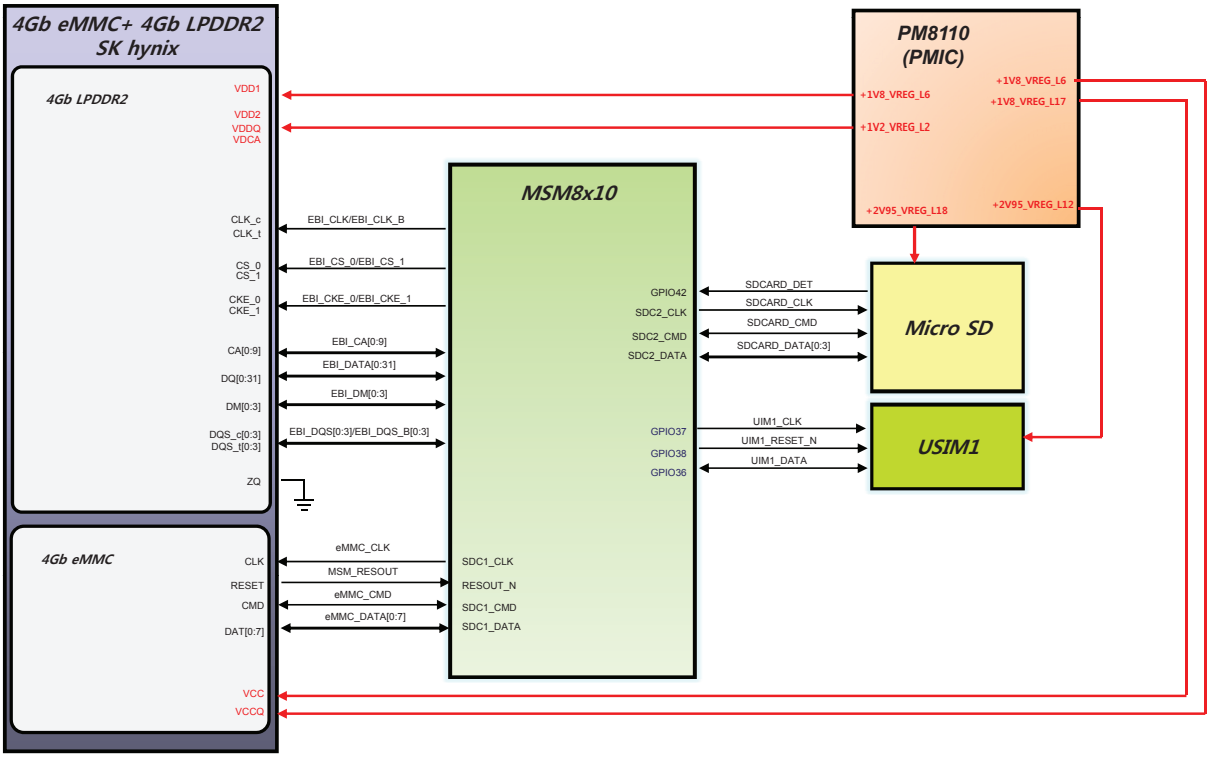

[D160] Block Diagram - Sensors

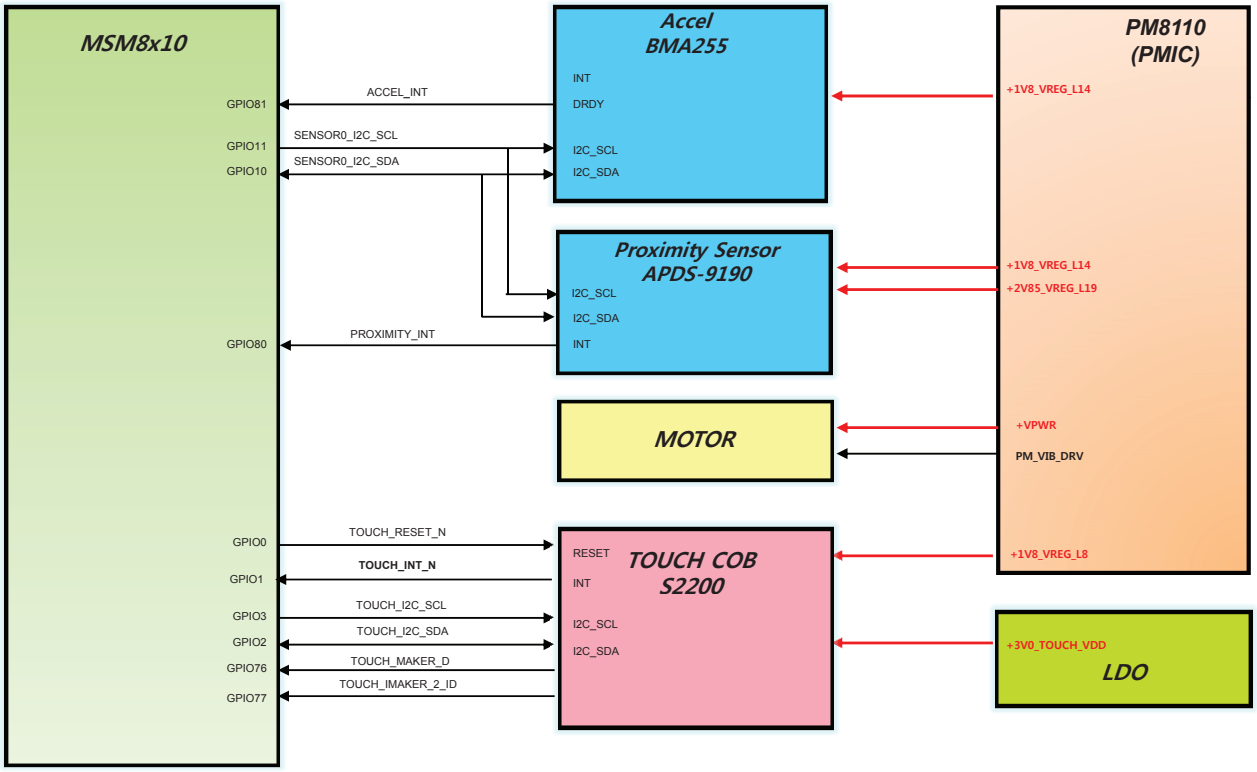

6. CIRCUIT DIAGRAM

< 1-1-1-4_ANT_WCDMA_NO_DRX >

ANT1 (GSM Quad / WCDMA B1, B2, B4, B5, B8)

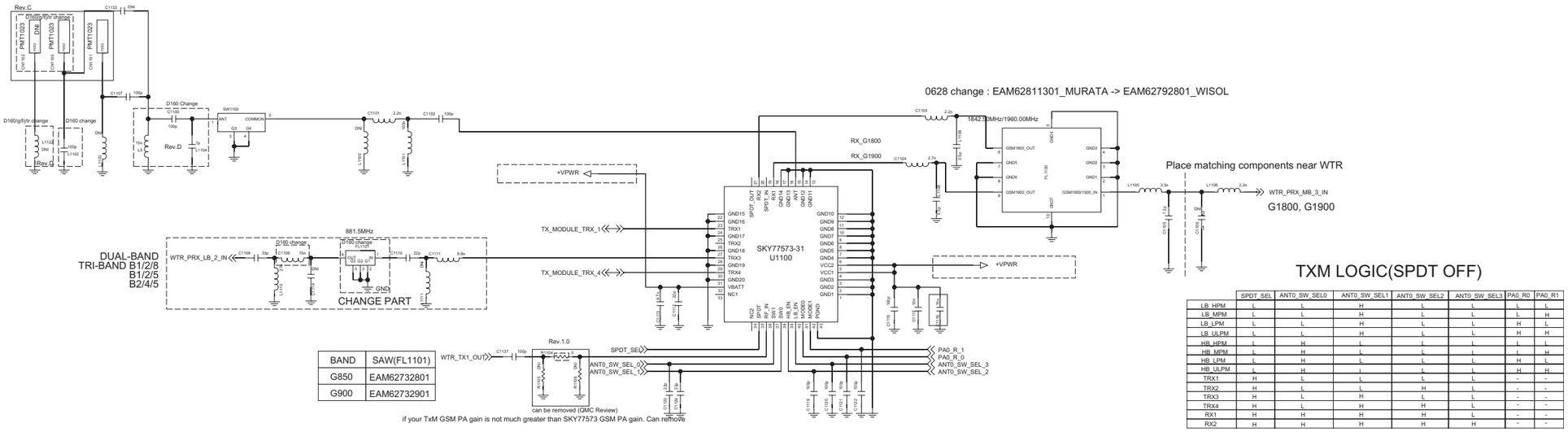

BAND	SAW(FL1101)
G850	EAM62732801
G900	EAM62732901

TXM LOGIC(SPDT OFF)

	SPDT_SEL	ANT0_SW_SEL0	ANT0_SW_SEL1	ANT0_SW_SEL2	ANT0_SW_SEL3	PA0_R0	PA0_R1
LB_HPM	L	L	H	L	L	L	L
LB_MPM	L	L	H	L	L	L	H
LB_LPM	L	L	H	L	L	H	L
LB_ULPM	L	L	H	L	L	H	H
HB_HPM	L	H	L	L	L	L	L
HB_MPM	L	H	L	L	L	L	H
HB_LPM	L	H	L	L	L	H	L
HB_ULPM	L	H	L	L	L	H	H
TRX1	H	L	L	L	L	-	-
TRX2	H	L	L	H	L	-	-
TRX3	H	L	H	L	L	-	-
TRX4	H	L	H	H	L	-	-
RX1	H	H	H	H	L	-	-
RX2	H	H	H	H	H	-	-

< 1-1-4-5 TRX_WCDMA_B1_B2_B5_B8 DUAL > Rev 0.4

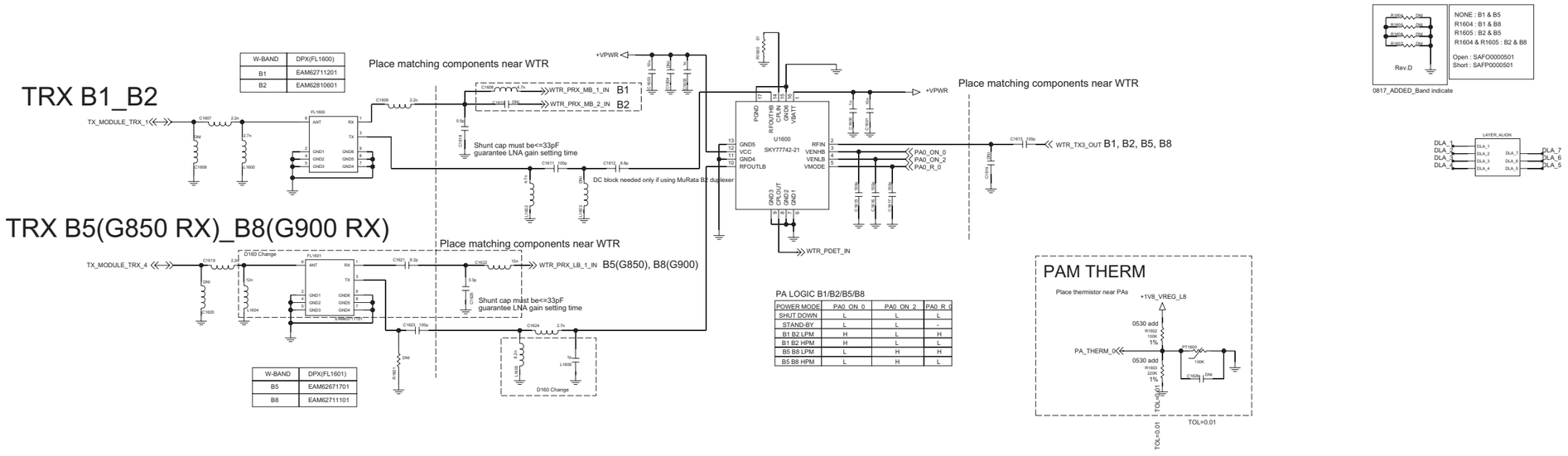

W-BAND	DPX(FL1600)
B1	EAM62711201
B2	EAM62810601

W-BAND	DPX(FL1601)
B5	EAM62671701
B8	EAM62711101

PA LOGIC B1/B2/B5/B8

POWER MODE	PA0_ON_0	PA0_ON_2	PA0_R_0
SHUT DOWN	L	L	L
STAND-BY	L	L	-
B1 B2 LPM	H	L	H
B1 B2 HPM	H	L	L
B5 B8 LPM	L	H	H
B5 B8 HPM	L	H	L

NONE : B1 & B5
R1604 : B1 & B8
R1605 : B2 & B8
R1604 & R1605 : B2 & B8

Open : SAFO0000501
Short : SAFP0000501

< 1-1-3-1_RFIC_WTR2605 >

Rev_0.6

WCDMA							
WTR2605	B2, B4, B5	B1, B2, B5	B1, B2, B8	B1, B5, B8	B2, B5	B1, B5	B1, B8
TX1_OUT	GSM	GSM	GSM	GSM	GSM	GSM	GSM
TX2_OUT	B4	B1	B1	B5			
TX3_OUT	B2, B5	B2, B5	B2, B8	B1, B8	B2, B5	B1, B5	B1, B8
RX_LB1_IN	B5(G850)	B5(G850)	B8(G900)	B8(G900)	B5(G850)	B5(G850)	B8(G900)
RX_LB2_IN	G900	G900	G850	B5(G850)	G900	G900	G850
RX_MB1_IN	B4	B1	B1	B1			B1
RX_MB2_IN	B2	B2	B2		B2	B2	
RX_MB3_IN	G1800,G1900	G1800,G1900	G1800,G1900	G1800,G1900	G1800,G1900	G1800,G1900	G1800,G1900

CDMA			
WTR2605	VZW	SPCS	Metro PCS
TX1_OUT			
TX2_OUT	BC0(BC10)	BC0(BC10)	BC0(BC10),BC15
TX3_OUT	BC1	BC1	BC1
RX_LB1_IN	BC0(BC10)	BC0(BC10)	BC0(BC10)
RX_LB2_IN			
RX_MB1_IN			BC15
RX_MB2_IN	BC1	BC1	BC1
RX_MB3_IN			

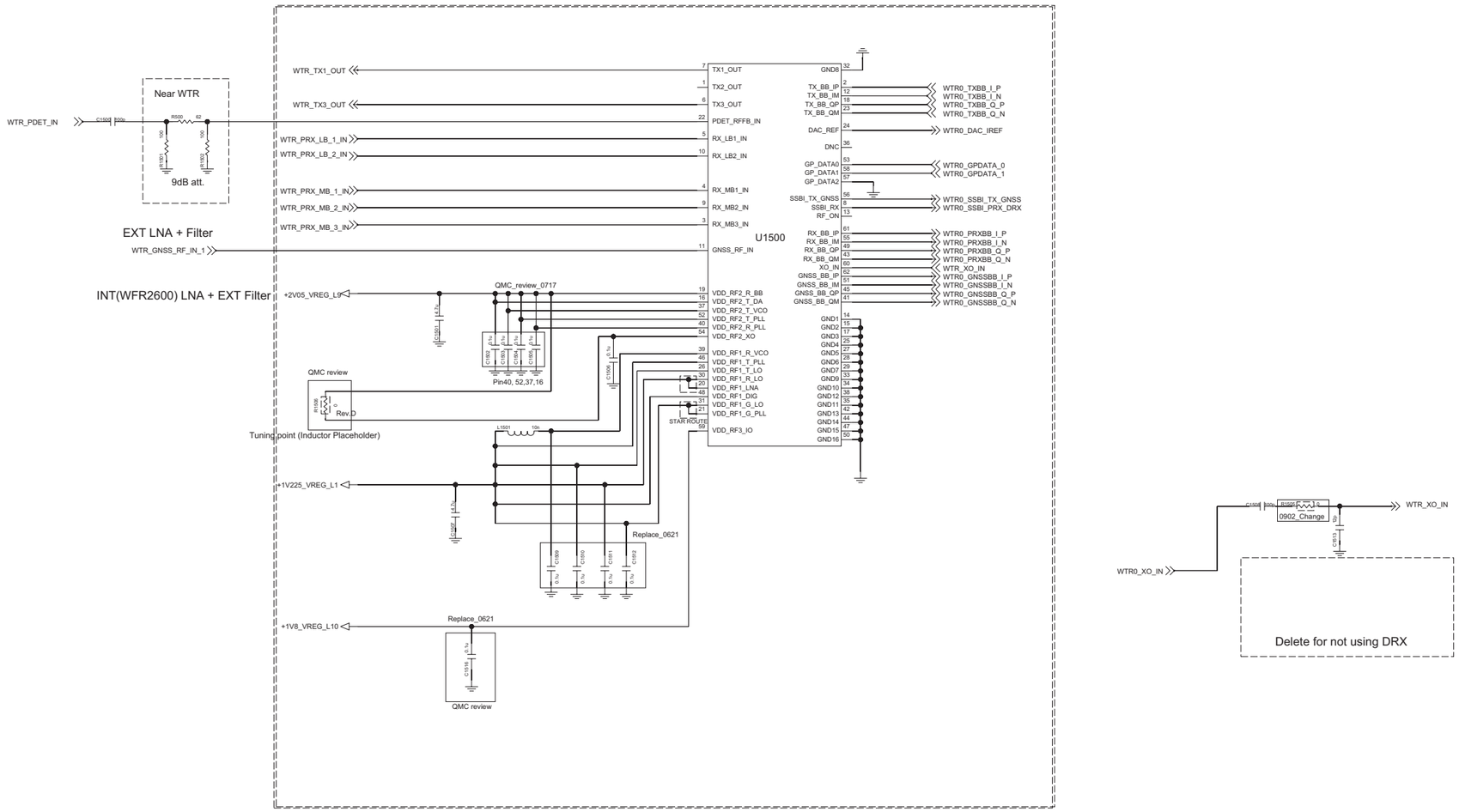

CCDS CARD Information	
Release Date	2013.11.13
Based on Reference Schematic	Rev.C

<2-1-4-3-1_MSM8210-0-28_CONTROL>
W/O RxD

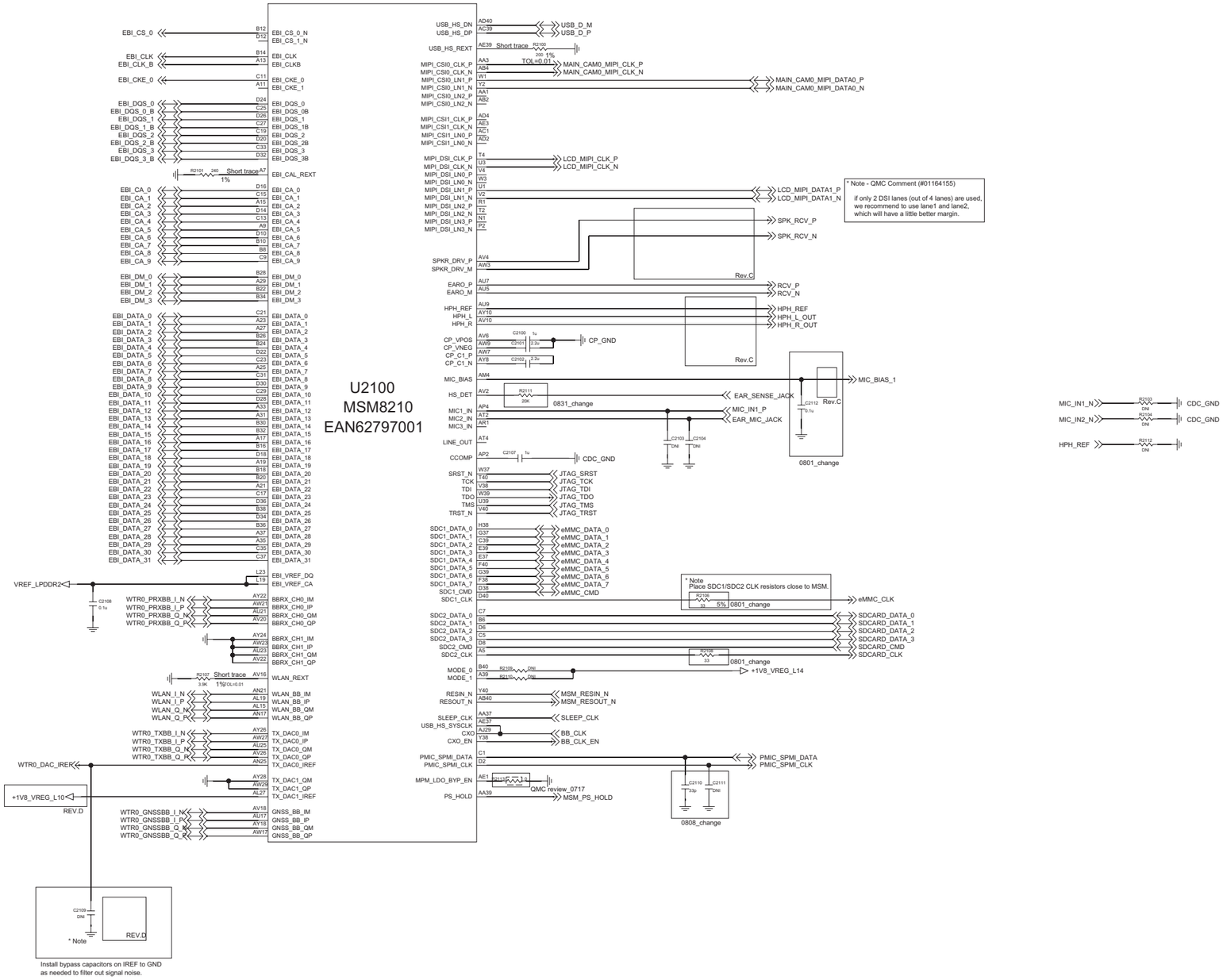

<2-1-4-3-2_MSM8210-0-28_GPIO> REV.0.6
W/O RxD

CCDS CARD Information	
Release Date	2013.11.13
Based on Reference Schematic	Rev.C

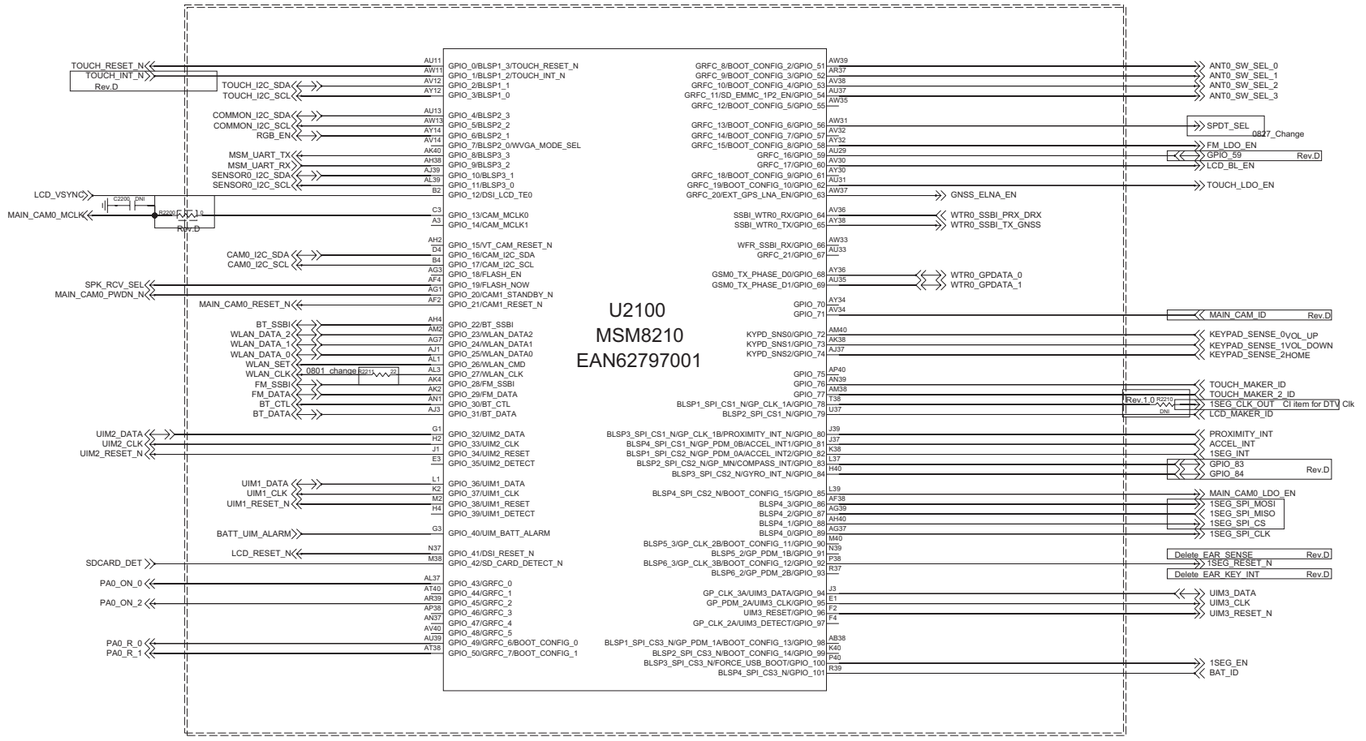

<2-1-4-3-4_MSM8210-0-28_GND/NC>
W/O RxD REV.0.6

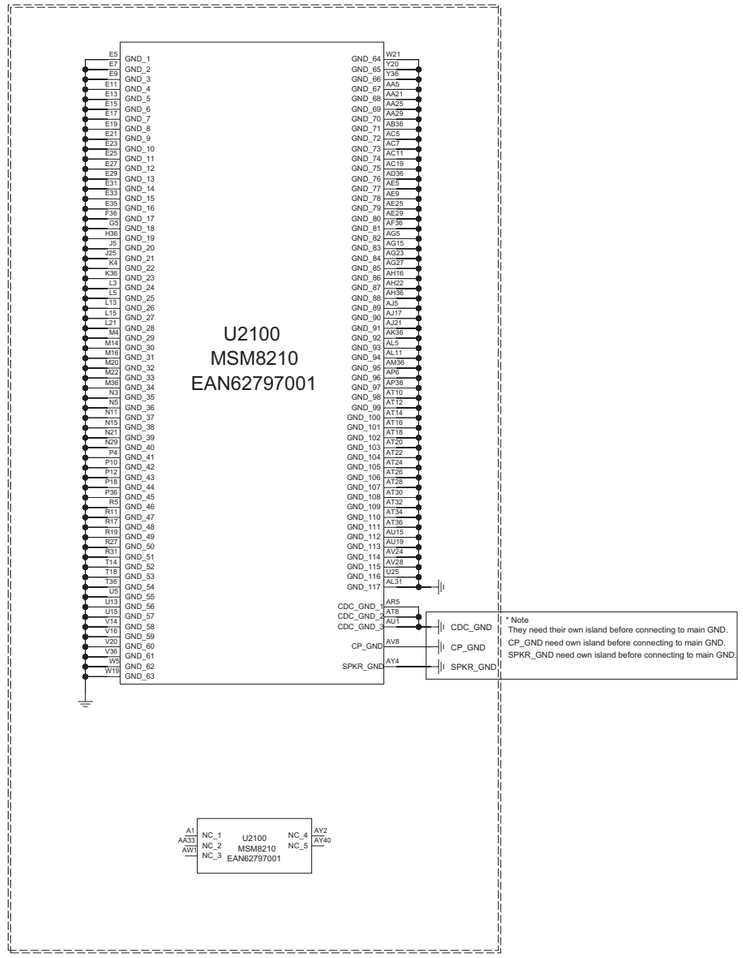

I2C Pull-up

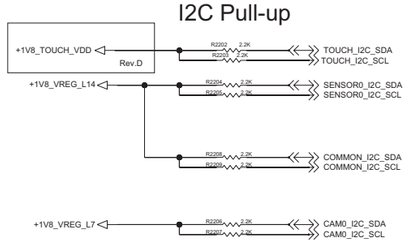

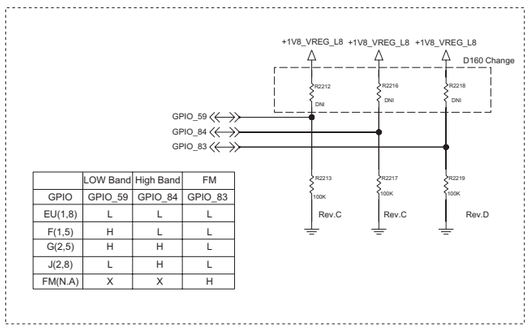

	LOW Band	High Band	FM
GPIO	GPIO_59	GPIO_84	GPIO_83
EU(1,8)	L	L	L
F(1,5)	H	L	L
G(2,5)	H	H	L
J(2,8)	L	H	L
FM(N.A)	X	X	H

<2-1-4-3-3_MSM8210_POWER> REV.0.6

CCDS CARD Information	
Release Date	2013.11.13
Based on Reference Schematic	Rev.C

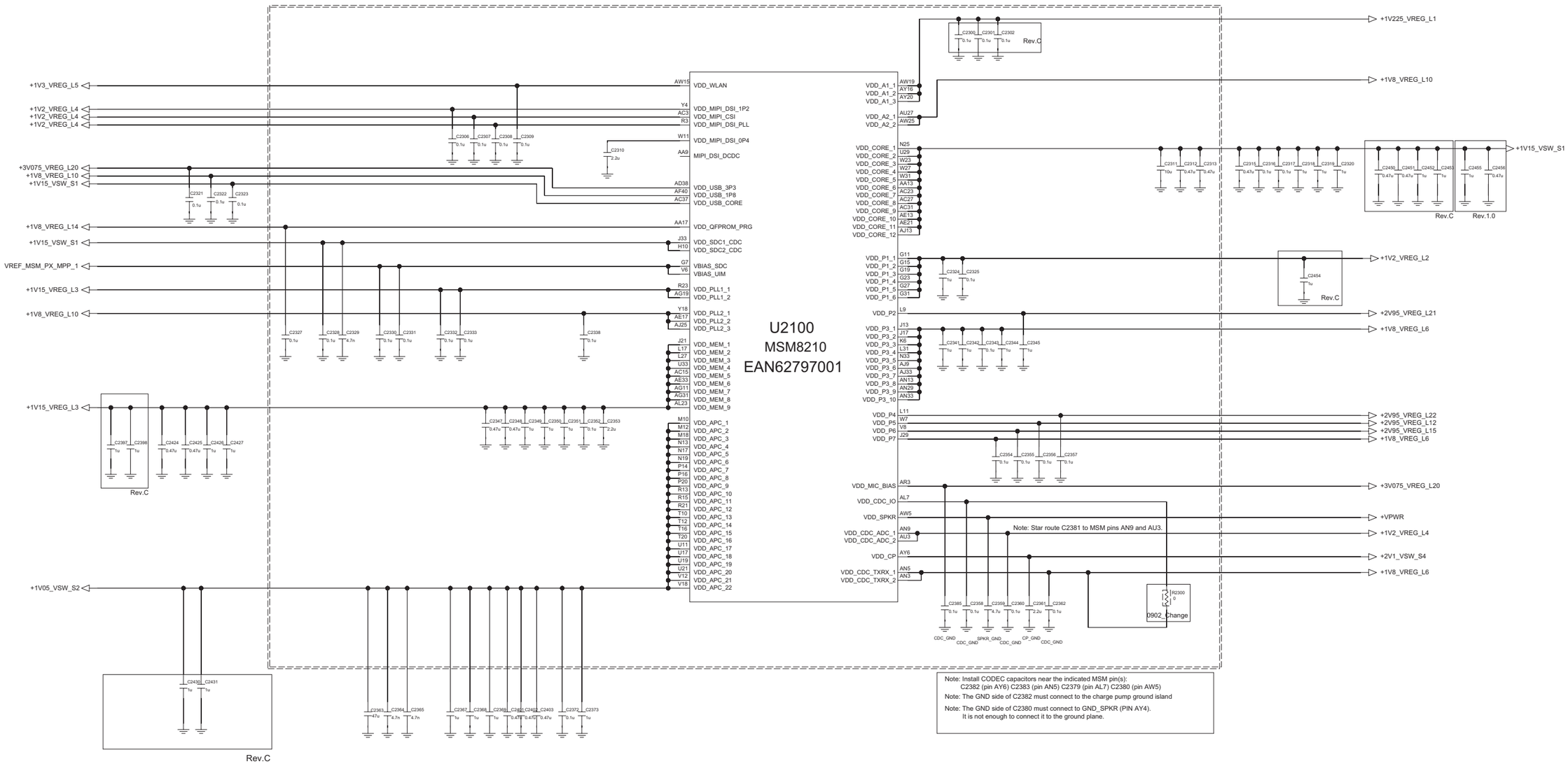

3_3_2_1_5__MCP_eMMC_v4_5_4G_DDR2_4G_SK_Hynix

eMMC 4.5 REV.0.4

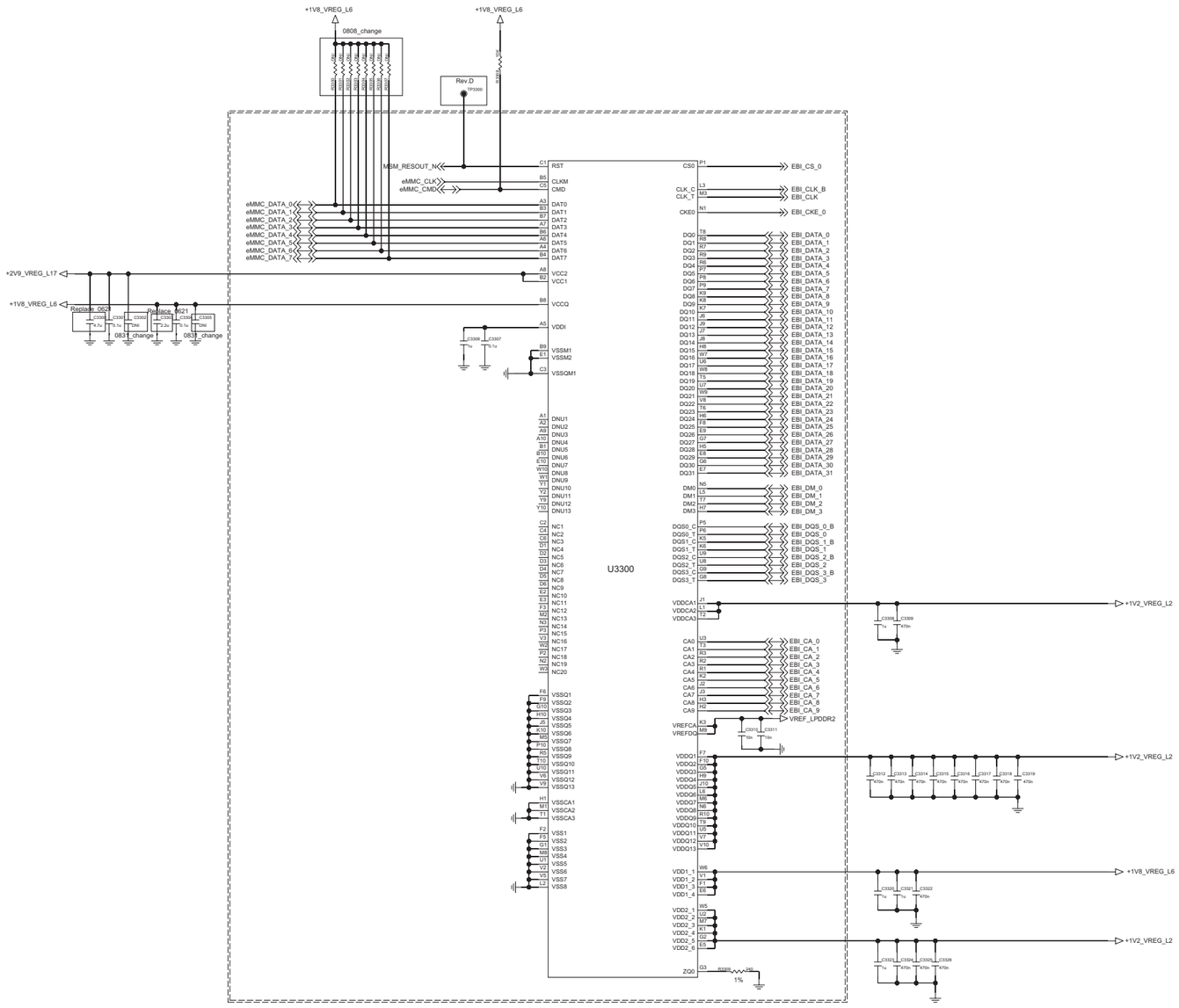

<4-1-4-2_PMIC_PM8110_POWER> REV.0.5

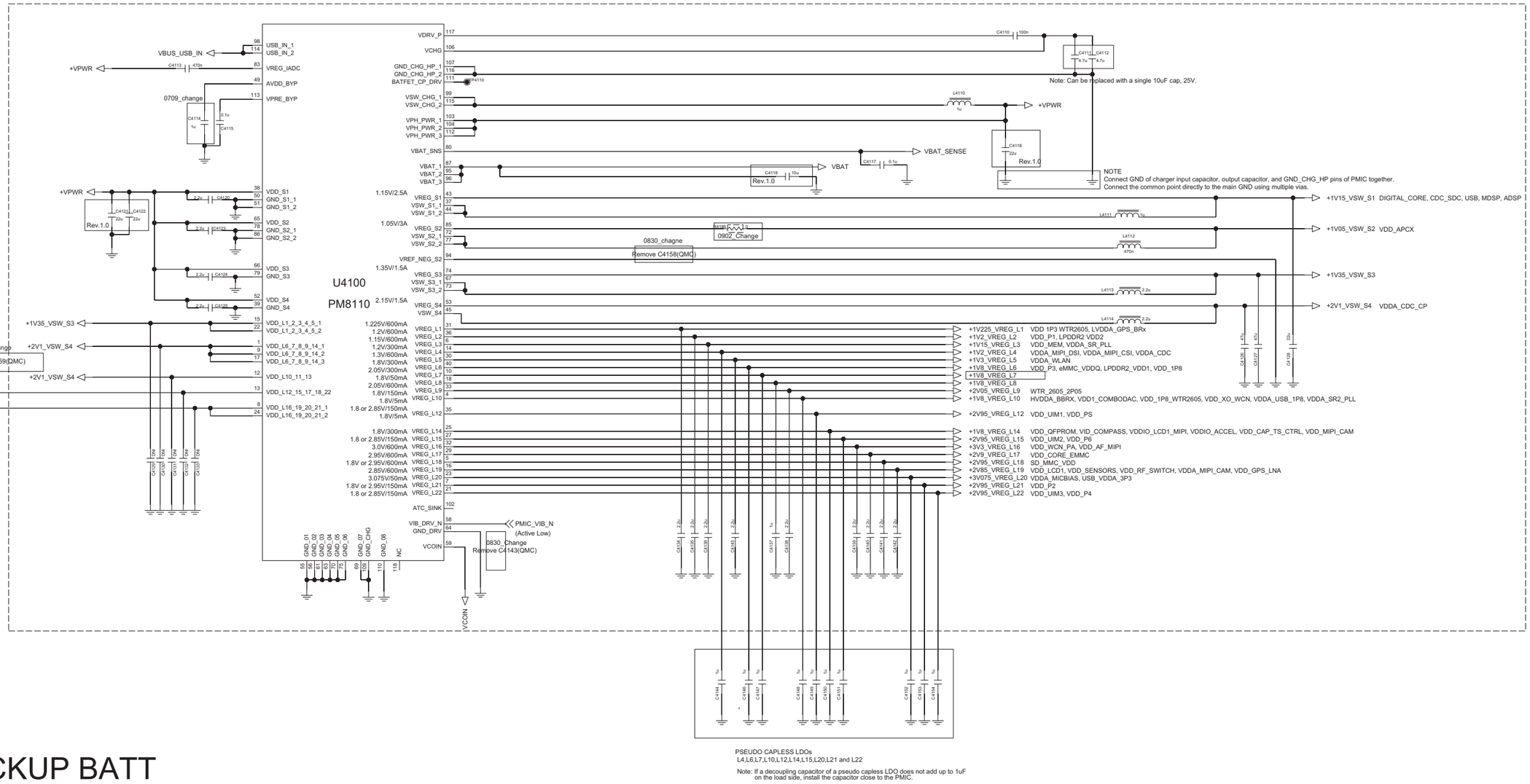

BACKUP BATT

Only Needed in Single SIM & CDMA
in Case of Dual Sim DTV : DNI

<4-6-1_LED_Driver_IC_LP5521> REV.0.4

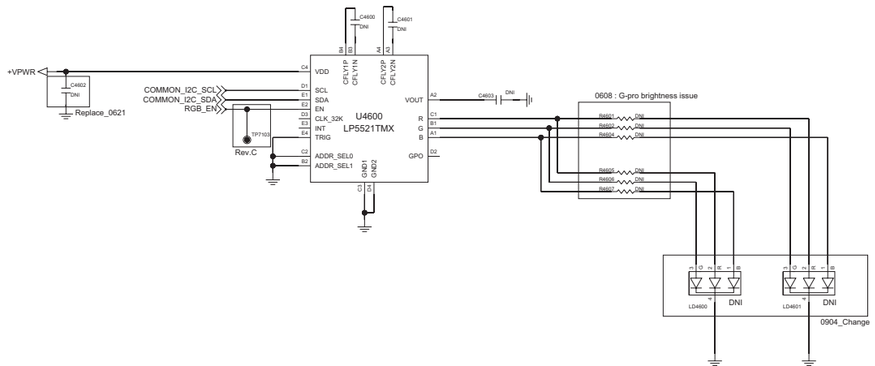

<7-1-1-1-1_LCD_3_5_INCH_HVGA_MIPI>
REV.0.3

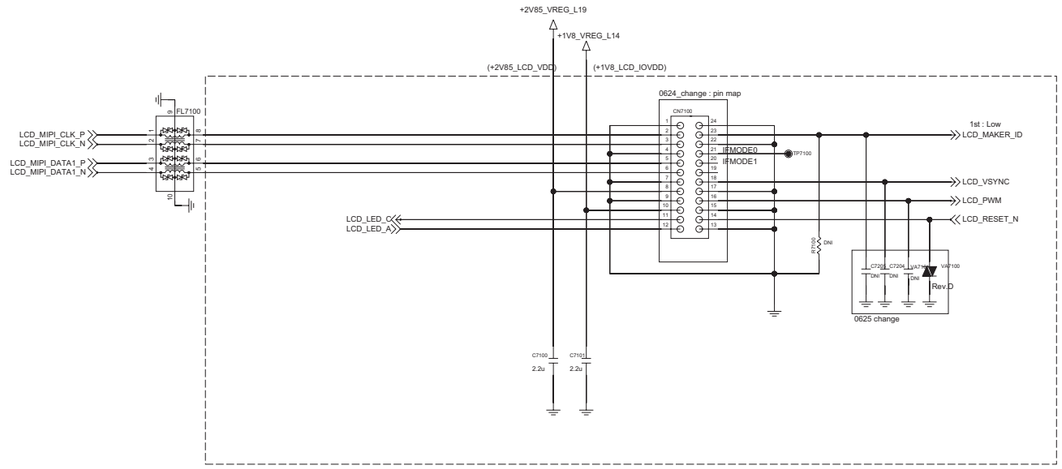

4-4-1_LCD_BL_Driver_LM3530
Rev_0.3

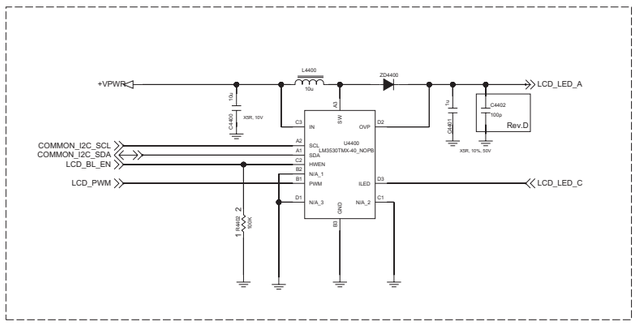

<7-2-2-2 S2200_Touch_CoB >
T/W Single Design : 1Dome 2Touch
T/W Dual Design : 4Touch

Rev.D

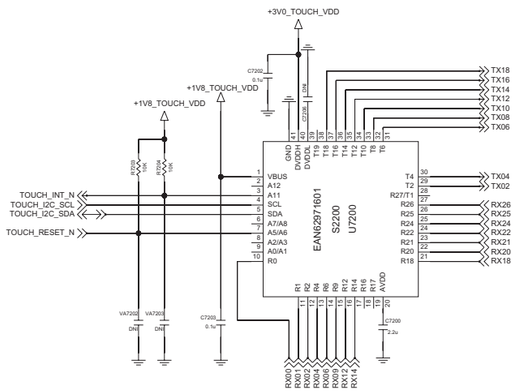

[Tovis] 34Pin_Socket

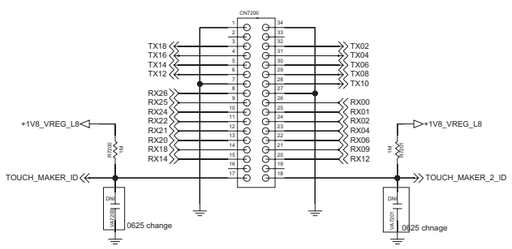

<5-1-1-4> BT/WiFi Combo_WCN3620 REV.0.6

RF Filter

POWER/GND

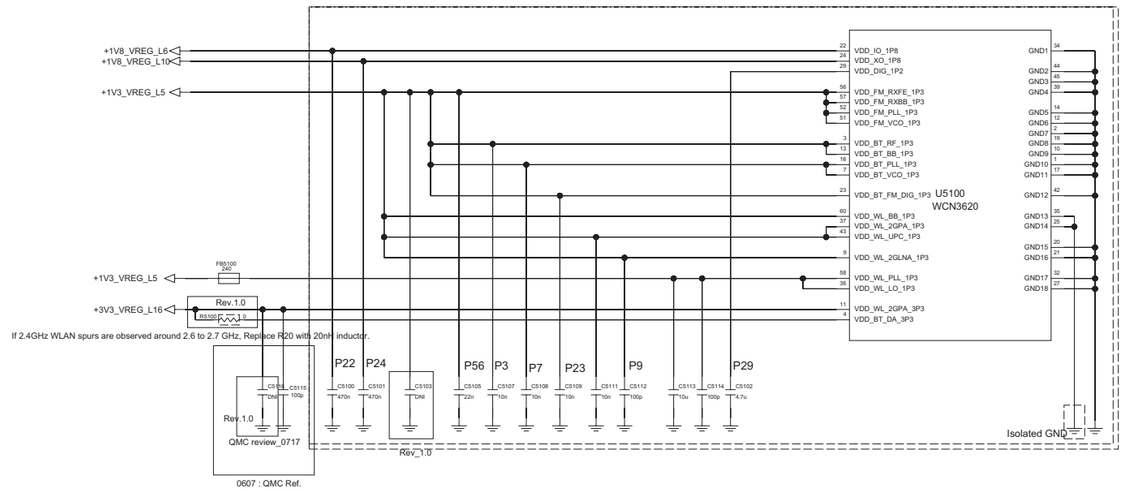

RF/CONTROL

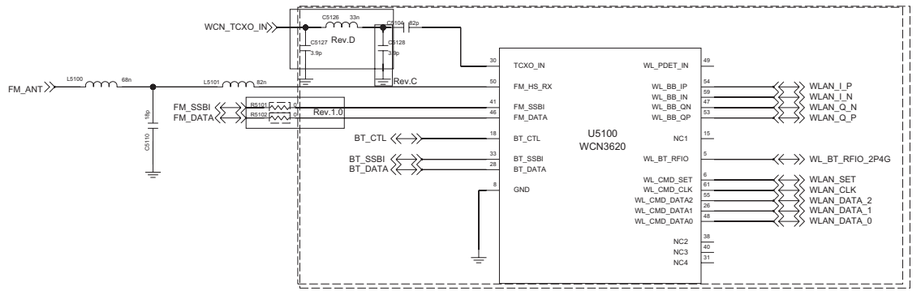

RF Filter

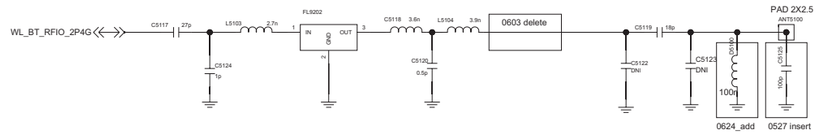

EXT LNA + Filter

ANT2 (GNSS)

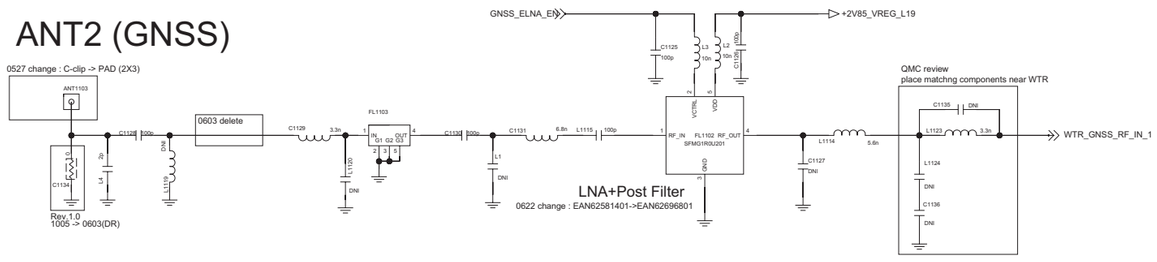

GPS External LNA LDO

Rev.1.0 Deleted

<5-3-1-3_Broadcasting_ONE-SEG_FC8150> REV.0.4

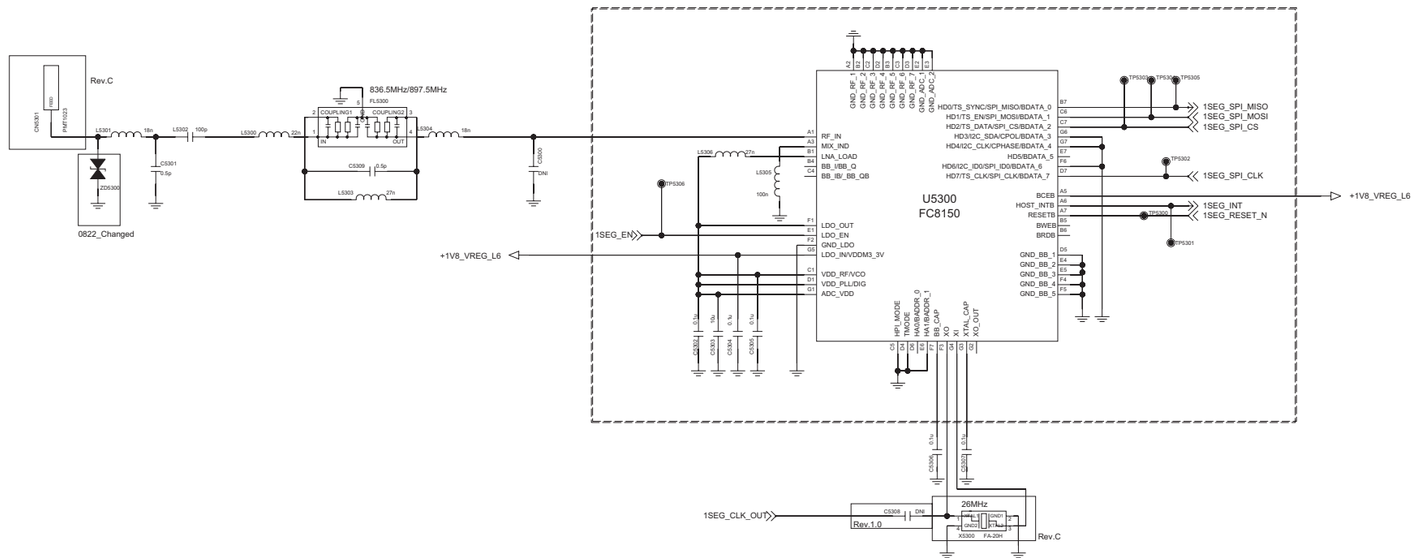

FM Intenna

5_4_1_FM_Intenna Rev_0.3

FM Radio

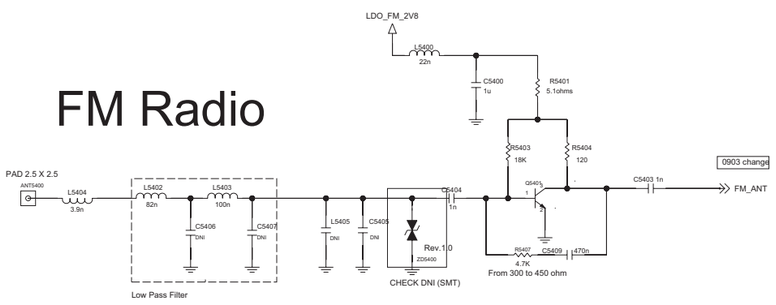

FM Intenna LDO

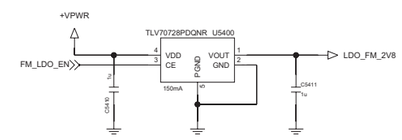

< 6-4-2_Earjack_Detector_MAX14628 >

Rev_0.3

Delete
Rev.D

<MBHC_MIC_LDO_+1V8 >

Deleted

Rev.C

< 6-6-1_Earjack > Rev_0.4

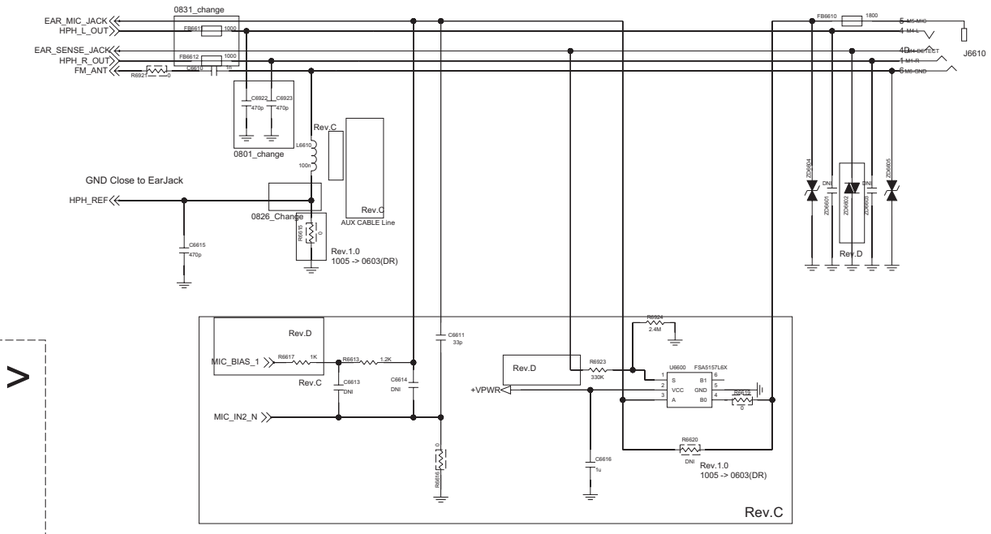

SPK/RCV Dual mode

Dual Mode Analog S/W
(support to negative)

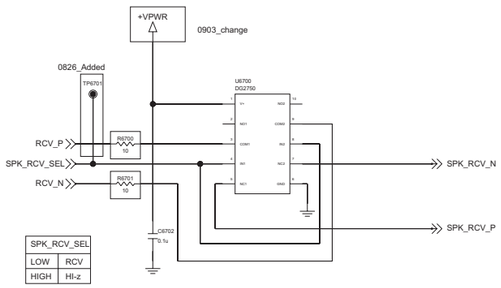

< 6-7-1_Speaker >Rev_0.4

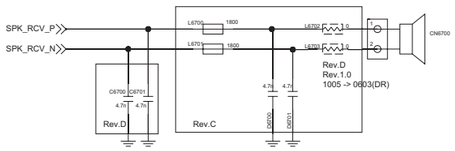

< 6-9-2_2MIC >
Rev_0.4

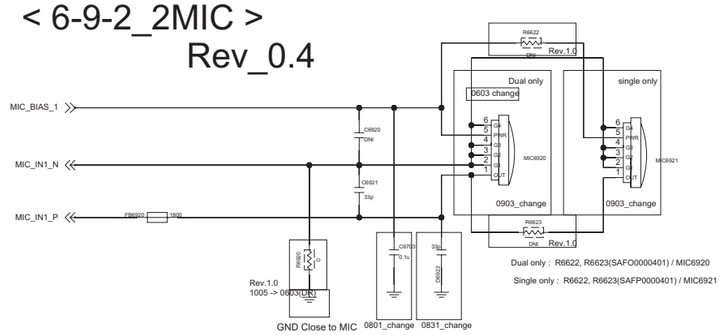

< 7-3-1_Main_Camera_24pin_3M >

Rev_0.3

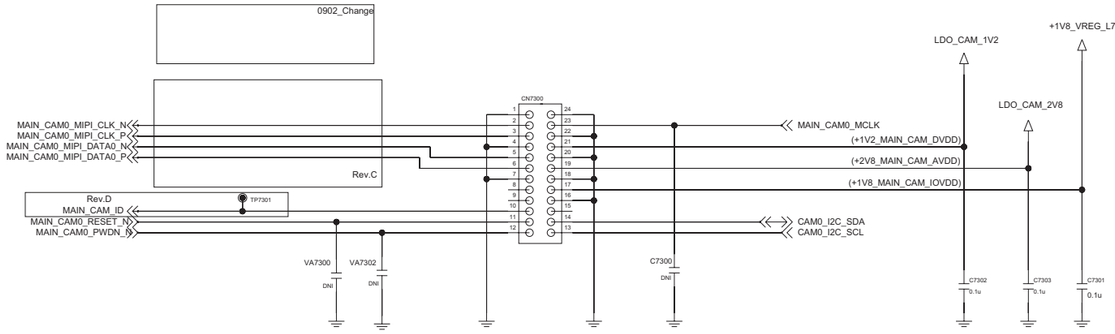

<8-1-1-1 ACCEL BMA255 >

Rev_0.3

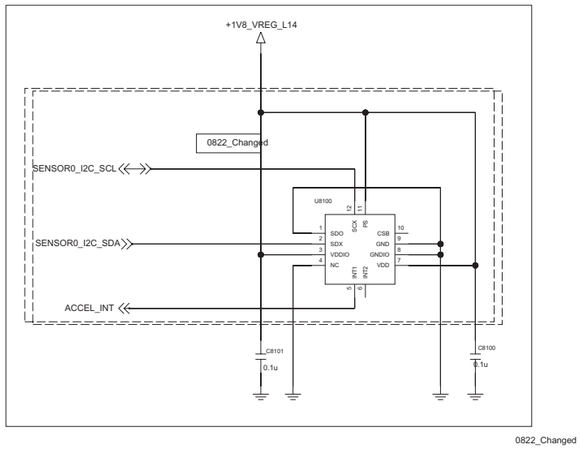

W3 Camera : EBP61742201

TOUCH LDO

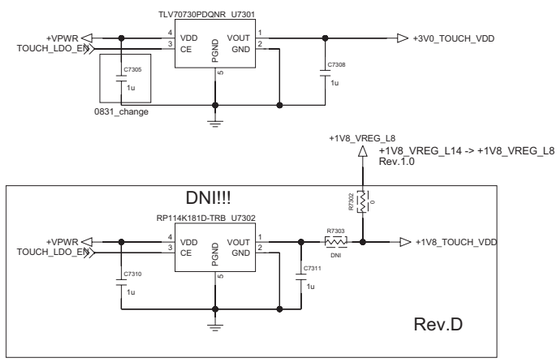

Camera LDO

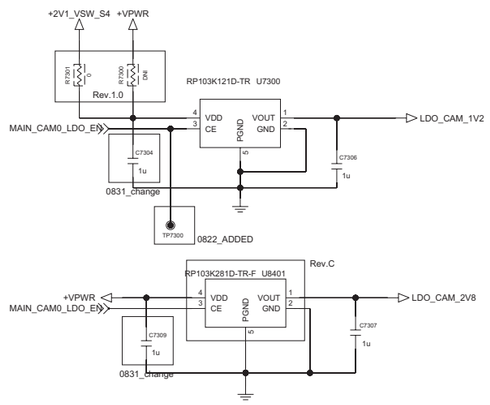

< 8-4-1-2_Proximity_APDS-9190 >

Rev_1.0

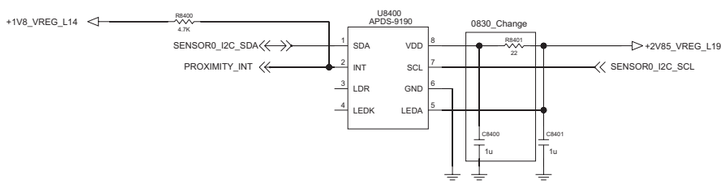

<9-1-2_Battery_CNT_4P>REV.0.6

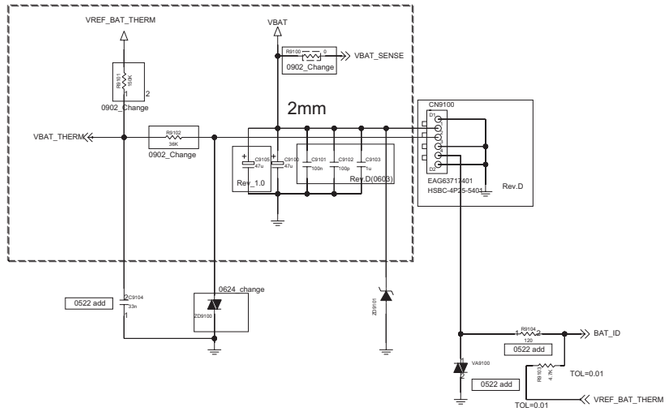

< 9-2-1_IO_USB2.0 > Rev_0.5

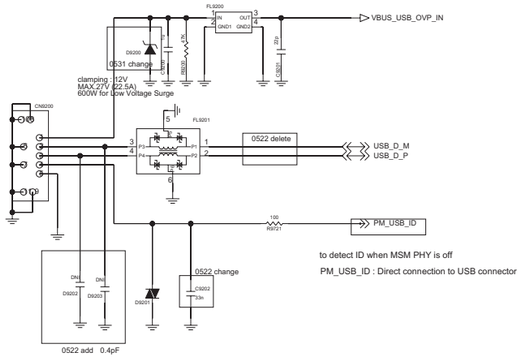

< 9-3-1_JTAG > Rev_0.4

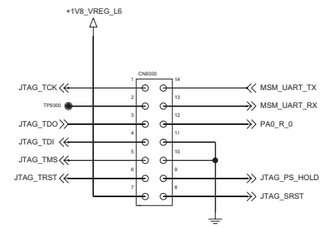

< 9-7-1_Power_Lock_Volume_Key > Rev_0.5

POWER & LOCK KEY

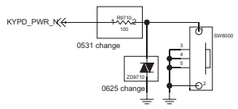

(DGMS Guide)
MC-C00052-11 : All items must be satified
1. GND pattern is applied to the Side Key
2. Signal line are placed center of PCB

(DGMS Guide)
MC-C05710-3 : All items must be satified
1. Reset Line of BB Chip do not overlap Key pad
2. Placement of Oder : Keypad - Capacitor(Varistor, TVS Diode) - Resistor

Vol. UP/DOWN

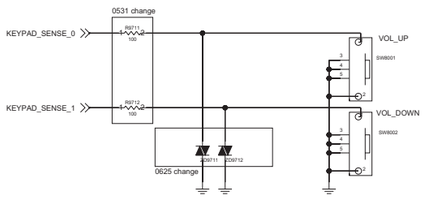

(DGMS Guide)
MC-C00050-9 : ESD prevention Shunt Cap Value of key for all, considering the case of pressing the keys same time,
Cap value of connecting one key sensing Line is less than 1nF

(DGMS Guide)
MC-C00069-11 : Key ESD protection on each signal applied DNI Pad

Home Key-Dome

Only Needed in Single SIM & CDMA

in Case of Dual Sim DTV : DNI

< 9-7-2_Home_Key_SW > Rev_0.5 Home KEY

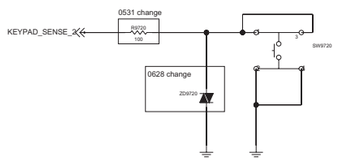

< 9-9-1-1_Motor > Rev_0.3

1st SIM Socket

<9-5-1-1_Single_SIM_6P>
REV.0.4

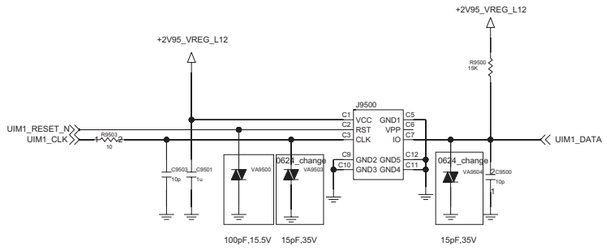

(DGMS Guide)
MC-C04581-13 : Below items are satisfied
1. SIM_DATA pull-up resistor
2. Use under 33pF(Cap_Varistor) on each signal line
3. When routing, SIM_DATA, SIM_CLK should be seperated
4. CAP,Varistor should Place close to connector

2nd SIM Socket

<9-5-1-1_Single_SIM_6P>
REV.0.4

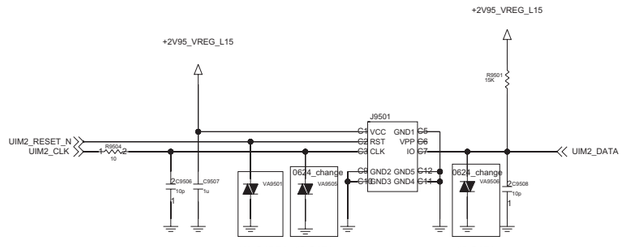

(DGMS Guide)
MC-C04581-13 : Below items are satisfied
1. SIM_DATA pull-up resistor
2. Use under 33pF(Cap_Varistor) on each signal line
3. When routing, SIM_DATA, SIM_CLK should be seperated
4. CAP,Varistor should Place close to connector

3rd SIM Socket Connector

<9-5-1-3_Triple_SIM_Con>
Rev_0.4

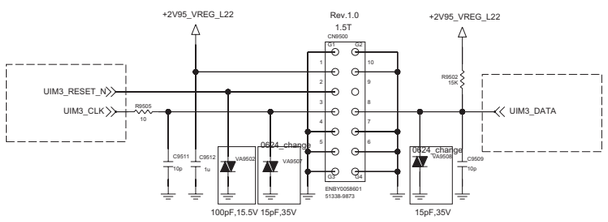

(DGMS Guide)
MC-C04581-13 : Below items are satisfied
1. SIM_DATA pull-up resistor
2. Use under 33pF(Cap_Varistor) on each signal line
3. When routing, SIM_DATA, SIM_CLK should be seperated
4. CAP,Varistor should Place close to connector

< 9-6-1_Socket_Micro_SD >
Rev_0.5

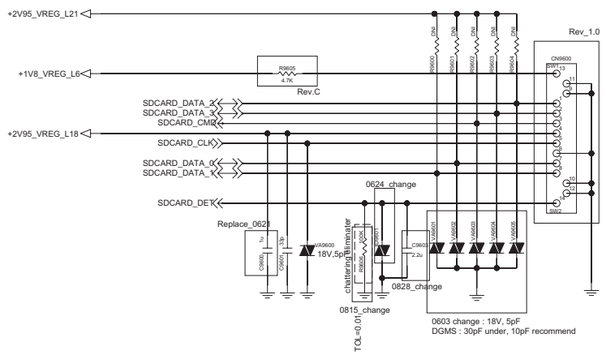

Card Detect	SW1 SW2	SD_CARD_DET
Card Installed	—o o—	1.8V
Card Not Installed	—o/ o—	GND

<4-1-4-1_PMIC_PM8110_DATA> REV.0.5

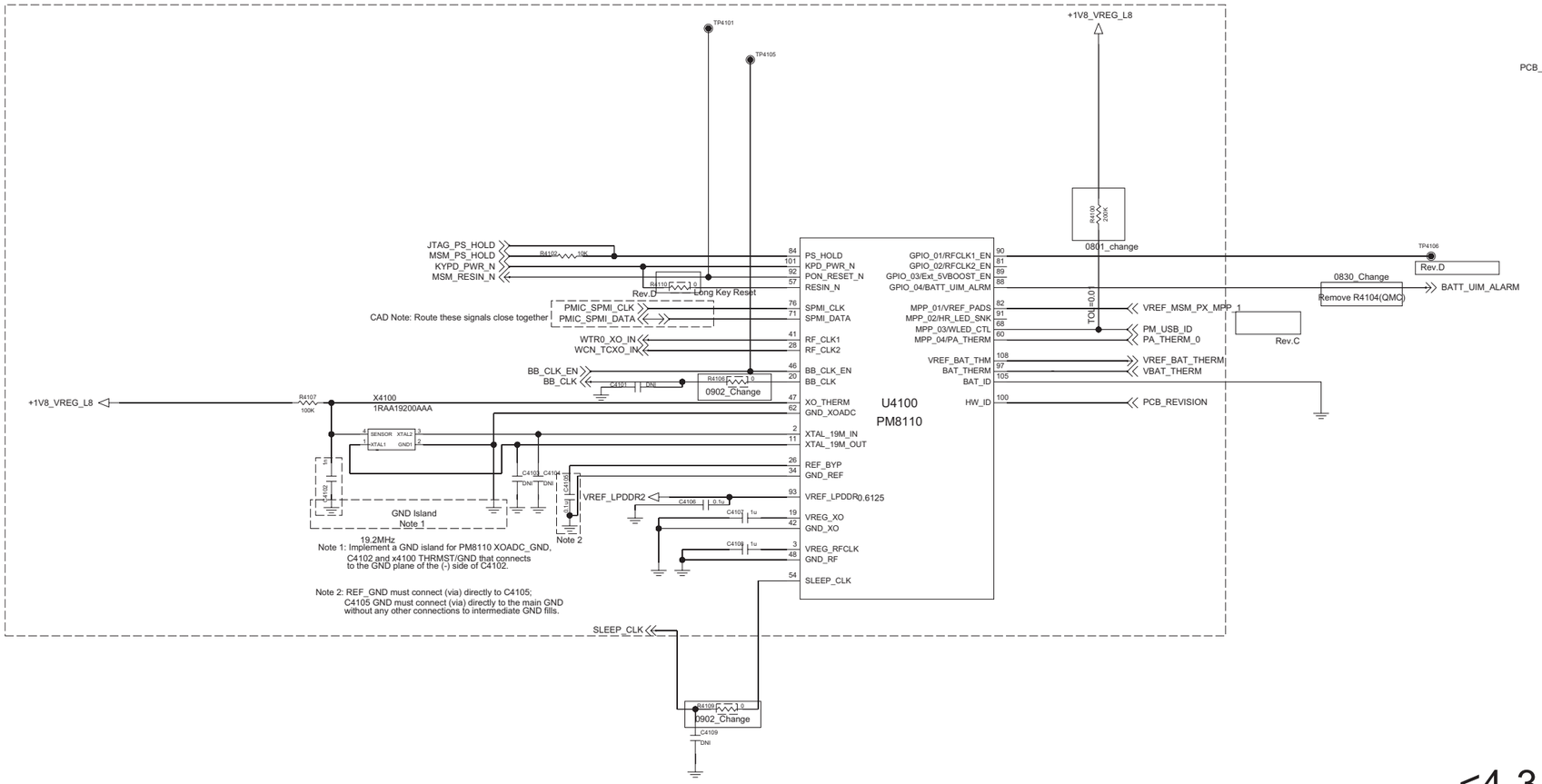

PCB REVISION

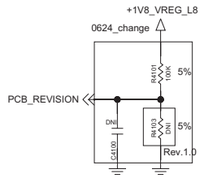

0	100K	20K	0.300
A	100K	30K	0.415
B	100K	43K	0.541
C	100K	68K	0.729
D	100K	100K	0.900
E	100K	180K	1.157
1.0	100K	DNI	1.800
1.1	DNI	100K	0.000

<4-3-2_OVP_RT9718L> REV.0.4

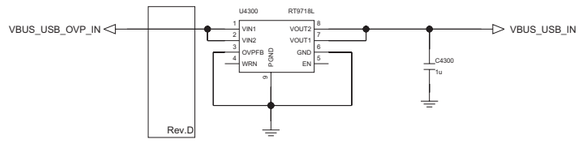

7. BGA PIN MAP

U1500 – WTR2605 (Bottom View)

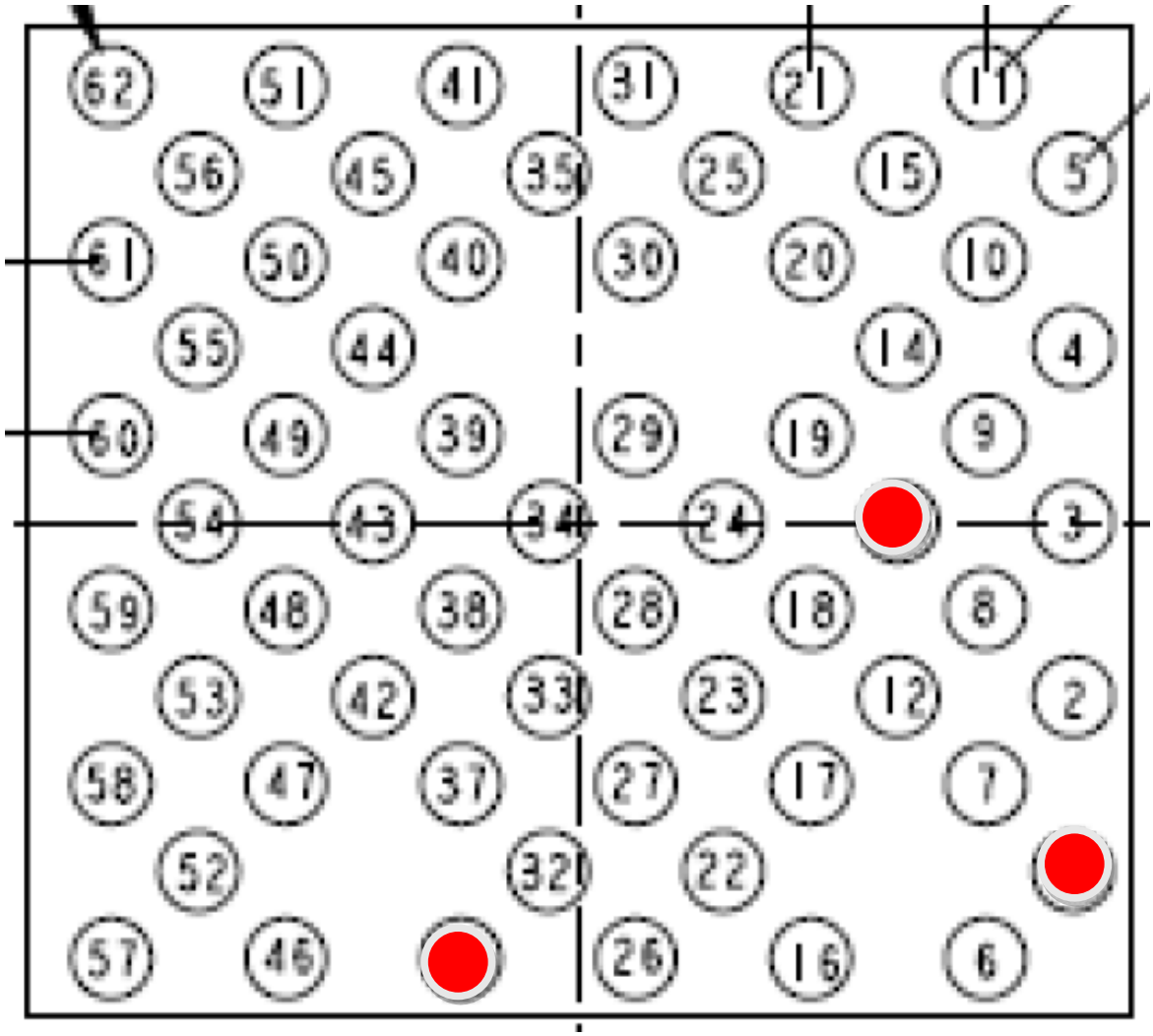

NOT IN USED

U2000 – MSM8210 (Top View)

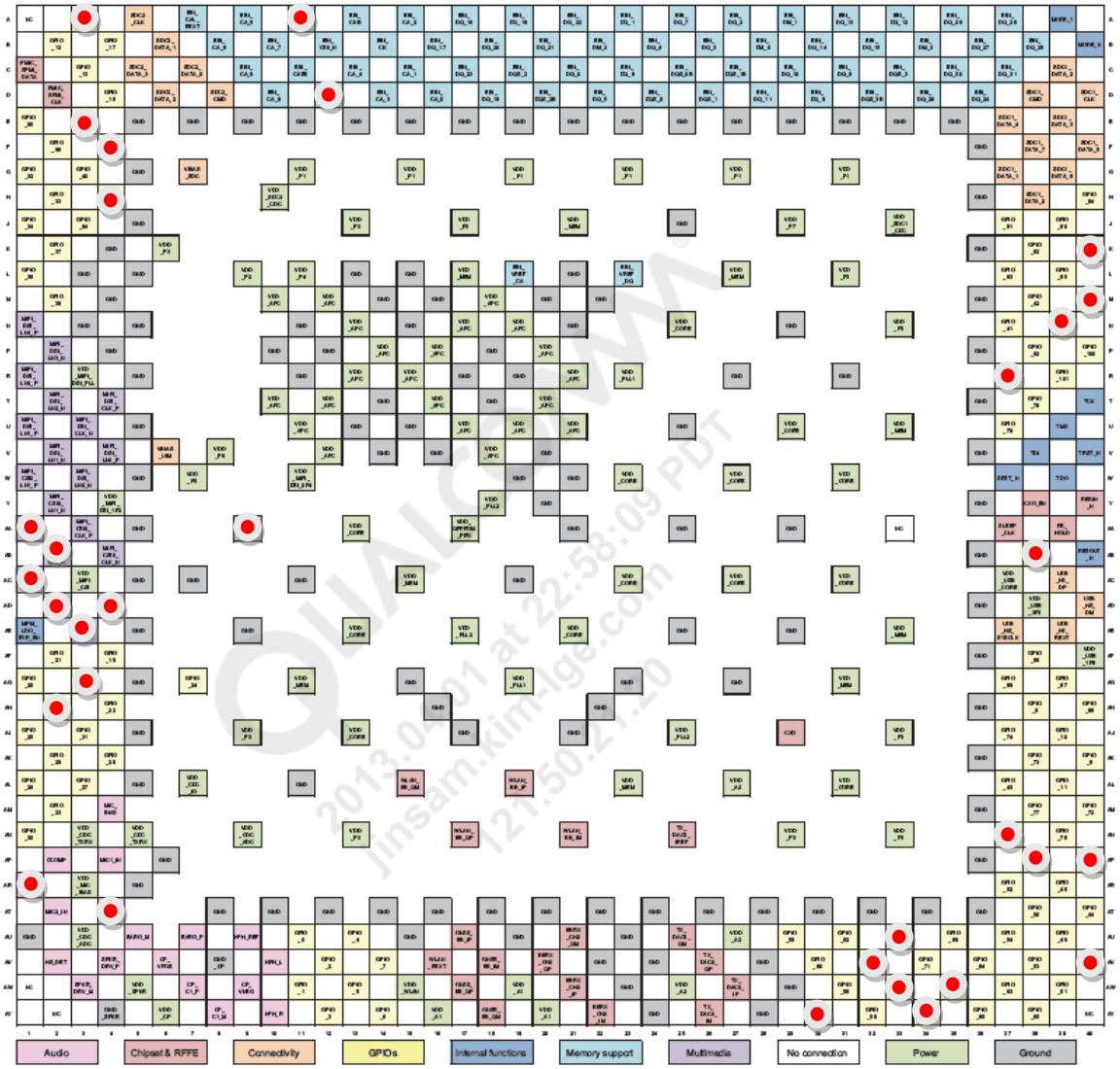

NOT IN USED

U3300 - MCP (TOP View)

	1	2	3	4	5	6	7	8	9	10	
A			DAT0	DAT6	VDDI	DAT5	DAT3	VCC			A
B		VCC	DAT1	DAT7	CLKm	DAT4	DAT2	VCCQ	VSSm		B
C	RST		VSSQ m		CMD						C
D											D
E	VSSm				VDD2	VDD1	DQ31	DQ29	DQ26		E
F	VDD1	VSS			VSS	VSSQ	VDDQ	DQ25	VSSQ	VDDQ	F
G	VSS	VDD2	ZQ0		VDDQ	DQ30	DQ27	DQS3 _t	DQS3 _c	VSSQ	G
H	VSSC A	CA9	CA8		DQ28	DQ24	DM3	DQ15	VDDQ	VSSQ	H
J	VDDC A	CA6	CA7		VSSQ	DQ11	DQ13	DQ14	DQ12	VDDQ	J
K	VDD2	CA5	VREFCA		DQS1 _c	DQS1 _t	DQ10	DQ9	DQ8	VSSQ	K
L	VDDC A	VSS	CLK_ c		DM1	VDDQ					L
M	VSSC A		CLK_t		VSSQ	VDDQ	VDD2	VSS	VREFD Q		M
N	CKE0				DM0	VDDQ					N
P	CS0				DQS0 _c	DQS0 _t	DQ5	DQ6	DQ7	VSSQ	P
R	CA4	CA3	CA2		VSSQ	DQ4	DQ2	DQ1	DQ3	VDDQ	R
T	VSSC A	VDDC A	CA1		DQ19	DQ23	DM2	DQ0	VDDQ	VSSQ	T
U	VSS	VDD2	CA0		VDDQ	DQ17	DQ20	DQS2 _t	DQS2 _c	VSSQ	U
V	VDD1	VSS			VSS	VSSQ	VDDQ	DQ22	VSSQ	VDDQ	V
W					VDD2	VDD1	DQ16	DQ18	DQ21		W
Y											Y
	1	2	3	4	5	6	7	8	9	10	

NOT IN USED

U4100 – PM8110 (Top View)

	1 VDD _L6_7 8 9 14		2 XTAL_ 19M_IN		3 VREG _RFCLK		4 VREG _L10		5 VREG _L18		6 VREG _L3		7 VREG _L21		8 VDD _L16_19 20 21
9 VDD _L6_7 8 9 14		10 VREG _L7		11 XTAL_ 19M_OUT		12 VDD _L10_11 13		13 VDD _L12_15_ 17 18 22		14 VREG _L4		15 VDD _L1_2_ 3 4 5		16 VREG _L19	
	17 VDD _L6_7 8 9 14		18 VREG _L8		19 VREG _XO		20 BB_ CLK		21 VREG _L22		22 VDD _L1_2_ 3 4 5		23 VREG _L20		24 VDD _L16_19 20 21
25 VREG _L14		26 REF _BYP		27 VREG _L15		28 RF_ CLK2		29 VREG _L17		30 VREG _L5		31 VREG _L1		32 VREG _L16	
	33 VREG _L9		34 GND _REF				35 VREG _L12				36 VREG _L2		37 VSW _S1		38 VDD _S1
39 GND _S4		40 VREG _L6		41 RF_ CLK1						42 GND _XO		43 VREG _S1		44 VSW _S1	
	45 VSW _S4		46 BB_ CLK_EN		47 XO_ THERM				48 GND _RF		49 AVDD _BYP		50 GND _S1		51 GND _S1
52 VDD _S4		53 VREG _S4		54 SLEEP _CLK				55 GND		56 GND		57 RESIN _N		58 VIB_ DRV_N	
	59 VCOIN		60 MPP _04		61 GND		62 GND_ XOADC		63 GND				64 GND _DRV		65 VDD _S2
66 VDD _S3		67 VSW _S3		68 MPP _03				69 GND		70 GND		71 SPMI _DATA		72 VSW _S2	
	73 VSW _S3		74 VREG _S3						75 GND		76 SPMI _CLK		77 VSW _S2		78 GND _S2
79 GND _S3		80 VBAT _SNS				82 MPP _01		83 VREG _IADC		84 PS_ HOLD		85 VREG _S2		86 GND _S2	
	87 VBAT		88 GPIO _04				90 GPIO _01				92 PON_ RST_N		93 VREF _LPDDR		94 VREF_ NEG_S2
95 VBAT		96 VBAT		97 BAT_ THERM		98 USB _IN		99 VSW _CHG		100 HW_ID		101 KPD_ PWR_N			
	103 VPH _PWR		104 VPH _PWR		105 BAT _ID		106 VCHG		107 GND_ CHG_HP		108 VREF_ BAT_THM		109 GND _CHG		110 GND
111 BATFET _CP_DRV		112 VPH _PWR		113 VPRE _BYP		114 USB _IN		115 VSW _CHG		116 GND_ CHG_HP		117 VDRV_P			

INPUT PWR MGT | OUTPUT PWR MGT | GEN HK | USER I/F | IC I/F | GPIO or MPP | Power | Ground

NOT IN USED

U4400 – LM3530 (Backlight driver) (Top View)

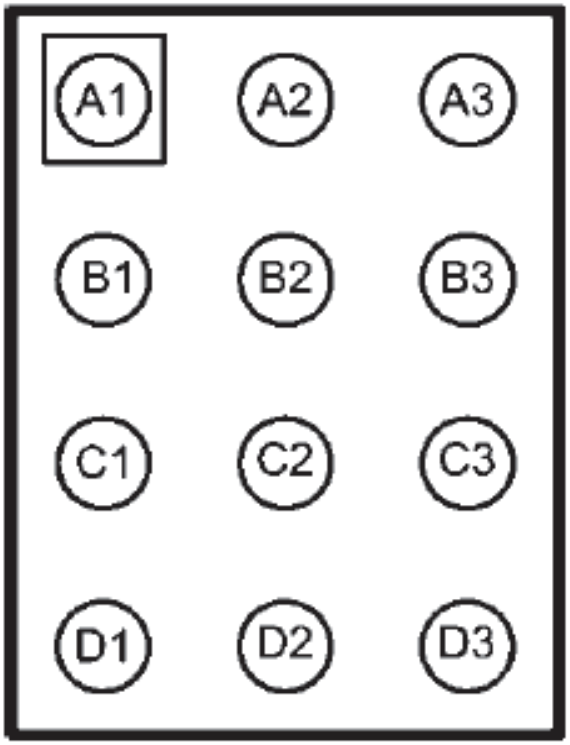

ALL USED

U4600 – LP5521 (LED driver) (Top View)

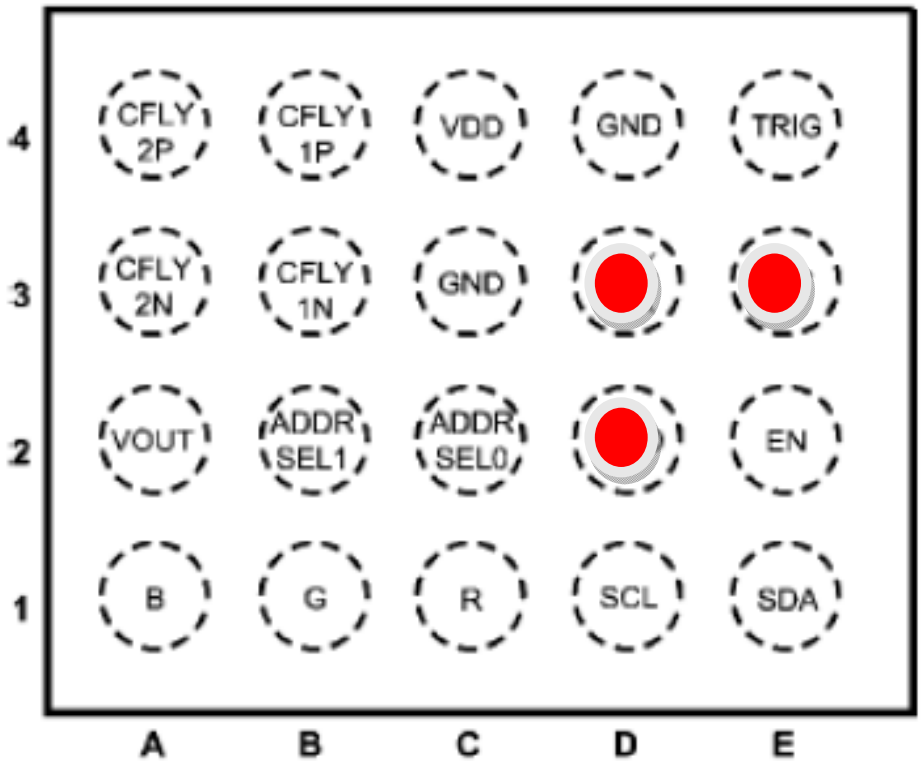

NOT IN USED

U5100 – WCN3620 (BT/WIFI) (Top View)

	1 GND		2 GND		3 VDD_BT _RF_1P3		4 VDD_BT _DA_3P3		5 WL_BT _RFIO		6 WL_CMD _SET
7 VDD_BT_ VCO_1P3		8 GND			9 VDD_WL_ 2GLNA_1P3		10 GND		11 VDD_WL_ 2GPA_3P3	
	12 GND		13 VDD_BT_ BB_1P3		14 GND					
16 VDD_BT_ PLL_1P3		17 GND		18 BT_CTL		19 GND		20 GND		21 GND	
	22 VDD_IO _1P8		23 VDD_BT_ FM_DIG_1P3		24 VDD_XO _1P8		25 GND		26 WL_CMD _DATA1		27 GND
28 BT_DATA		29 VDD_ DIG_1P2		30 TCXO_IN						32 GND	
	33 BT_SSBI		34 GND		35 GND		36 VDD_WL LO_1P3				37 VDD_WL_ 2GPA_1P3
		39 GND				41 FM_SSBI		42 GND		43 VDD_WL_ UPC_1P3	
	44 GND		45 GND		46 FM_DATA		47 WL_BB _QN		48 WL_CMD _DATA0		
50 FM_HS _RX		51 VDD_FM_ VCO_1P3		52 VDD_FM_ PLL_1P3		53 WL_BB _QP		54 WL_BB _IP		55 WL_CMD _DATA2	
	56 VDD_FM_ RXFE_1P3		57 VDD_FM_ RXBB_1P3		58 VDD_WL_ PLL_1P3		59 WL_BB _IN		60 VDD_WL _BB_1P3		61 WL_CMD _CLK

WLAN | FM | BT | Shared functions | Top level | Power | Ground | No Connect

NOT IN USED

8. PCB LAYOUT

LG-D160_MAIN_EAX65565301_1.0_TOP

U7200 : Touch IC
- no Touch Function

CN7300 : Camera Connector
- no Camera Function

FL1102 : GPS LNA filter
- no GPS Function

U5100 : BT/WIFI/FM Module
- Can not use BT, WIFI, FM

U8100 : Acceleration Sensor
- Can not use Motion Sense &
Compass Function

U2100 : MSMS8210 (Main chipset)
- no Boot/Reset, etc

U4100 : PMIC
- no Power on
- no Boot
- no Speaker/Headset Sound etc

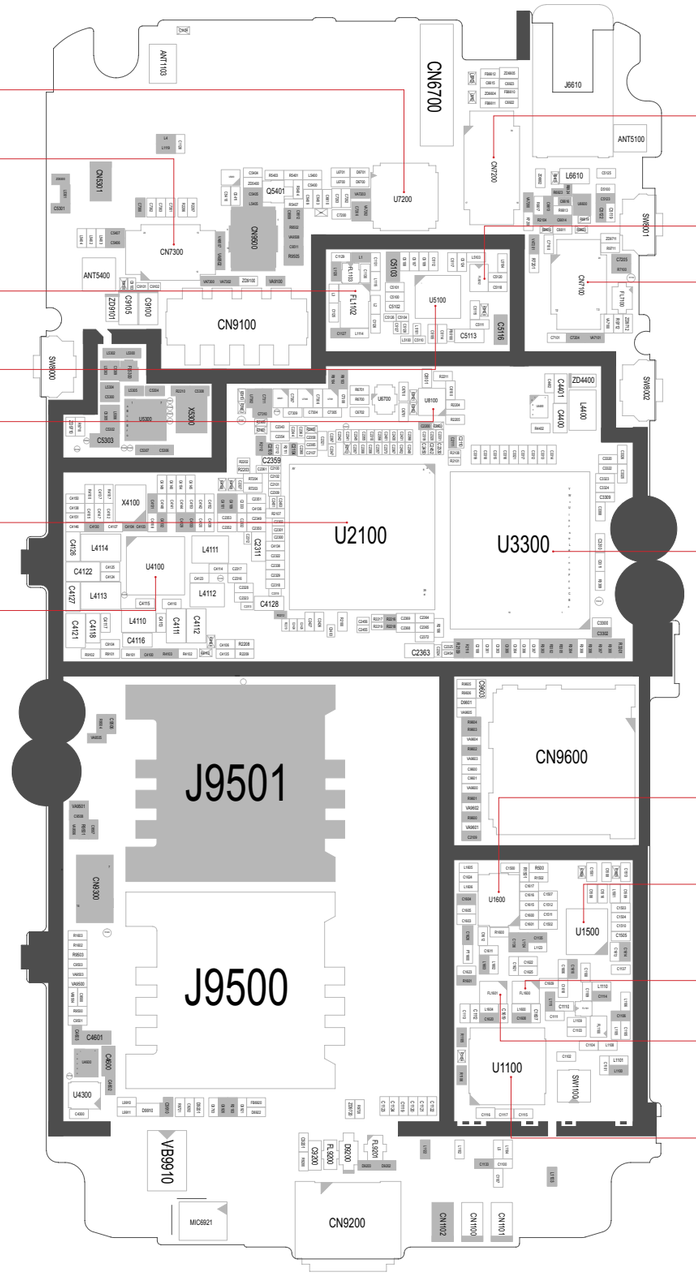

CN7200 : Touch Connector
- no Touch Function

FL9202 : Connectivity FEM
- Can not use BT, WIFI

CN7100 : LCD Connector
- no LCD Function

U3300 : Memory(MCP)
- no Boot/Reset, etc

U1600 : WCDMA PAM W900, W2100
- no Tx power

U1500 : RF Transceiver
- no Network service

FL1600 : Duplexer W2100 Tx/Rx
- no service

FL1601 : Duplexer W900 Tx/Rx
- no service

U1100 : Transmit & Tx Module
- no Network service
- GSM No Tx Power

LG-D160_MAIN_EAX65565301_1.0_BOT

9. CALIBRATION

CAL INFORMATION		
S/W VERSION		
[TachyonV48] LGD160 20140312 ALL File Calibration		
Please Check the Version to "B2B"		
H/W		
	Name	**Part No.**
PIF	PIF200(All Type)	BJAY0024021
USB Cable	USB Cable	RAD32247898
Power Cable	DC Power Cable	RAD32247878
I/O Cable	5P E-SATA_DC_Plug	RAD32167861
RF Cable_Main	MS-156C	BJAY0024004
Power Supply_PIF	Power Supply 5.3V	
Power Supply_Phone	Power Supply 5.0V	
RF Test Equipment	E5515C(8960)	
NOTICE	1. Use the dummy Battery (Refer to Attached image) 1) Phone states: Power off 2) If do not use the dummy battery, GSM TX fails. 2. Port Setting (Refer to Attached image) 1) Uart Port2 : Use the "LGE CDMA USB Serial Port"	

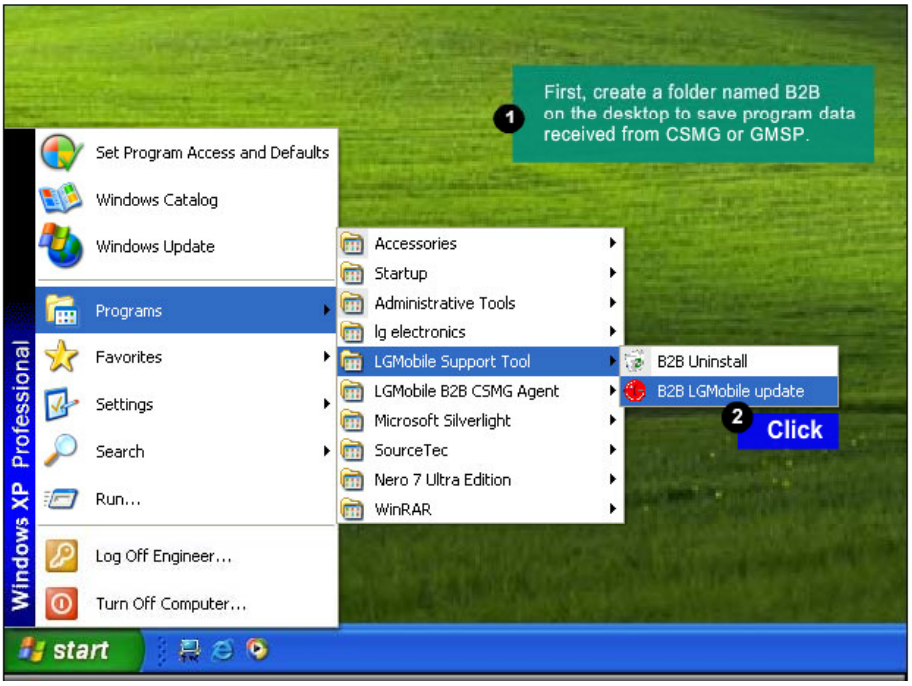

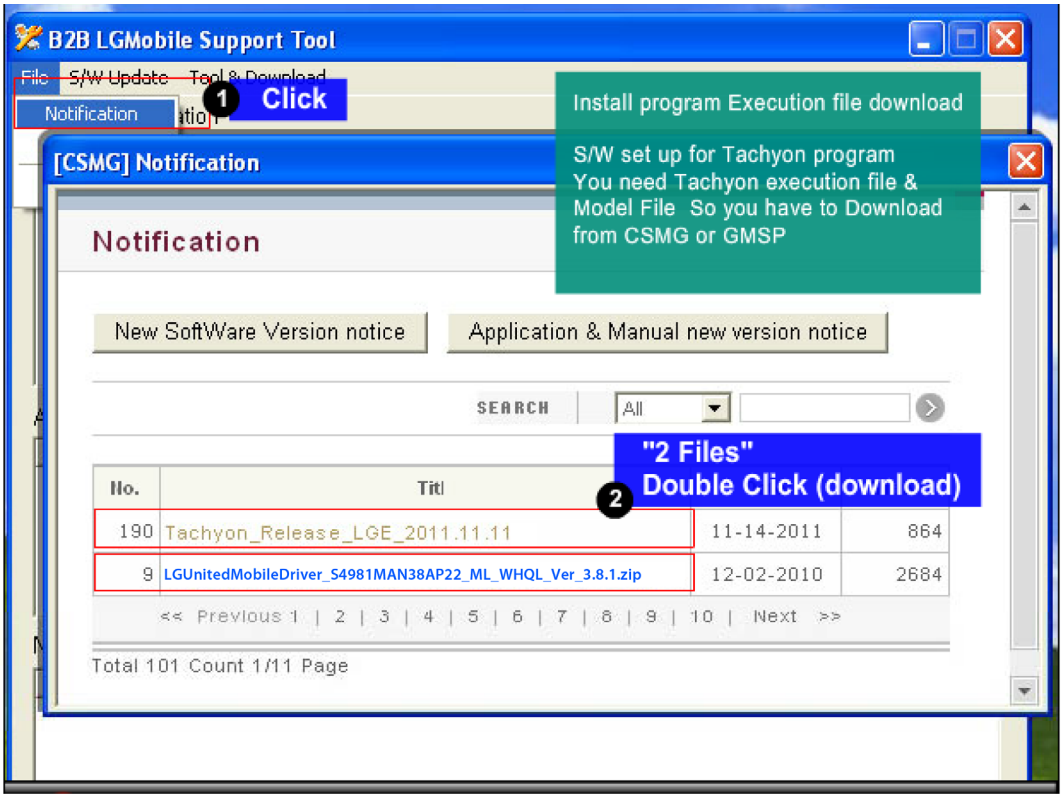

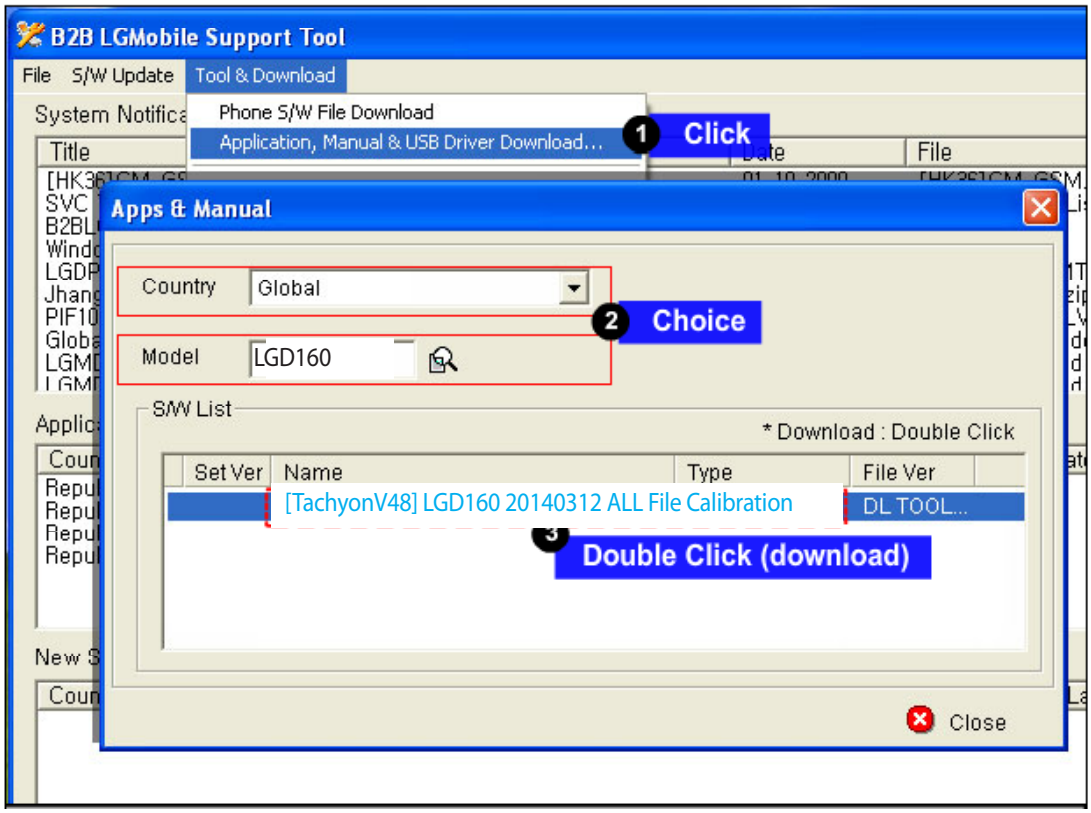

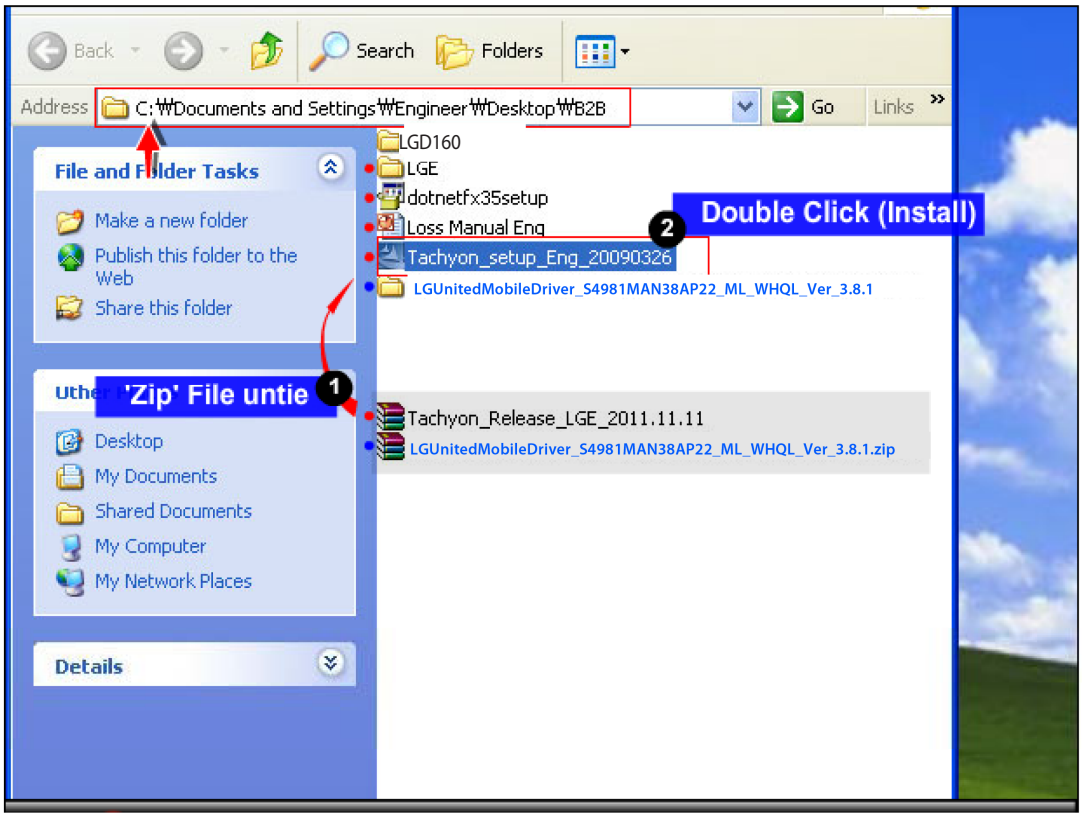

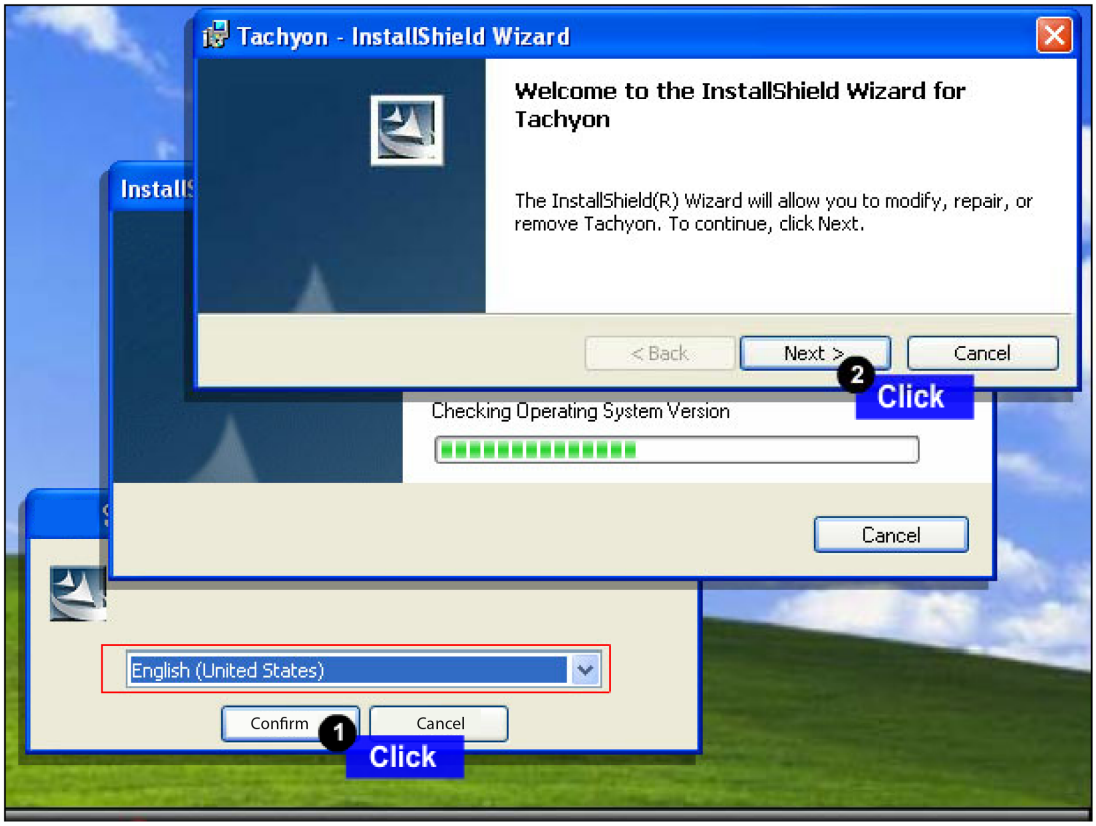

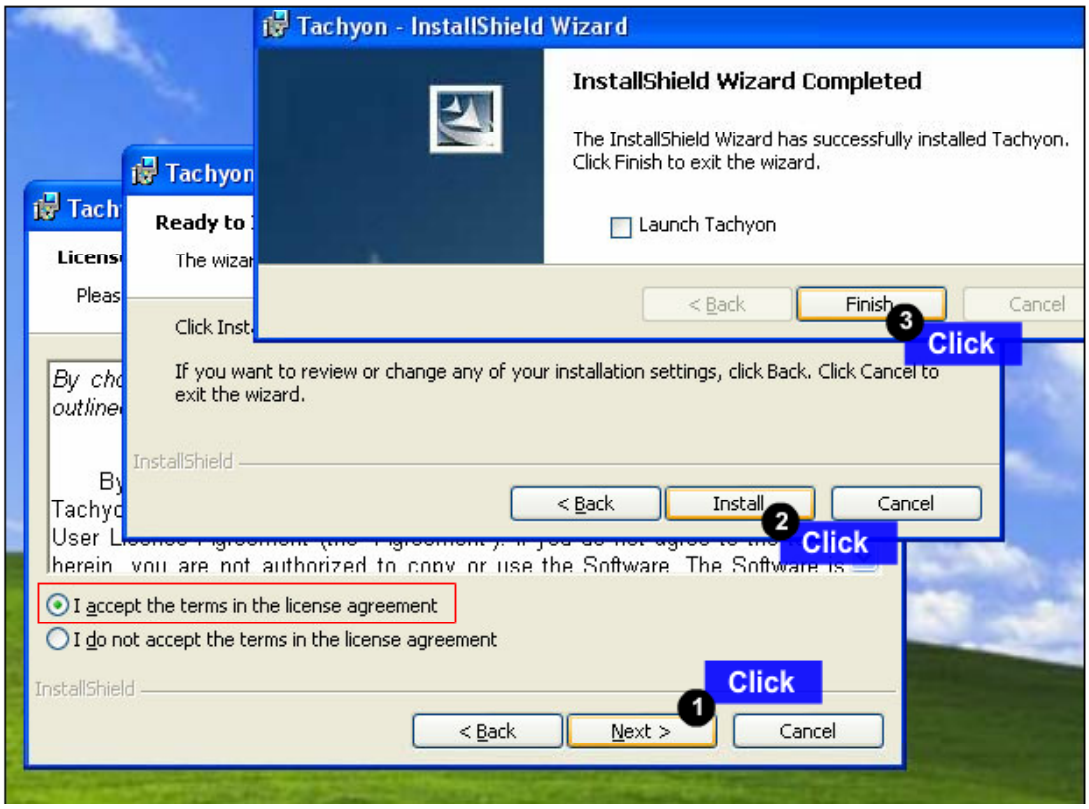

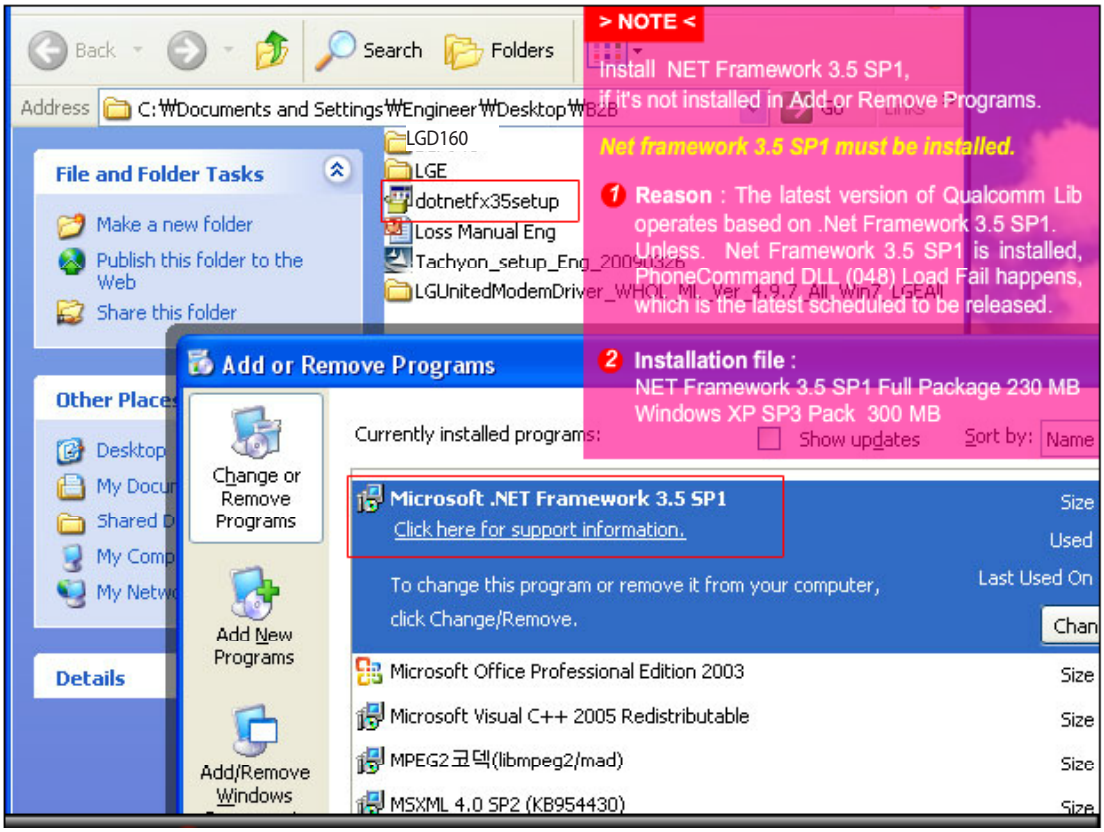

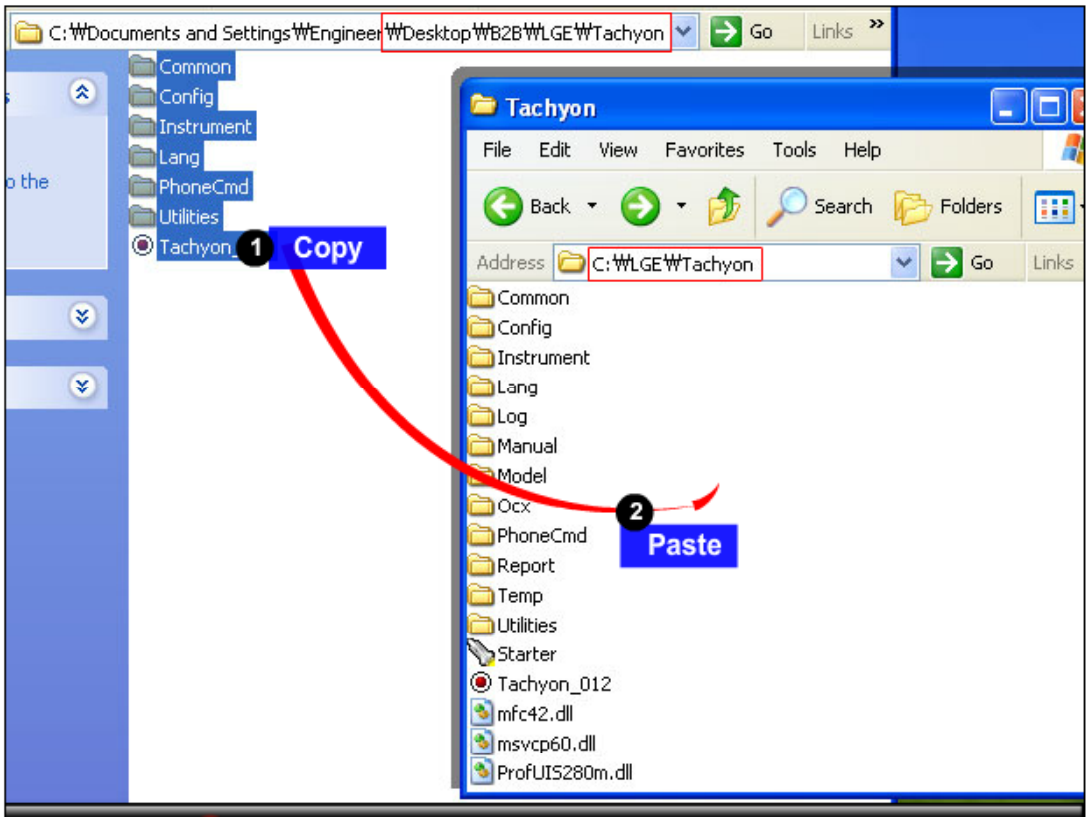

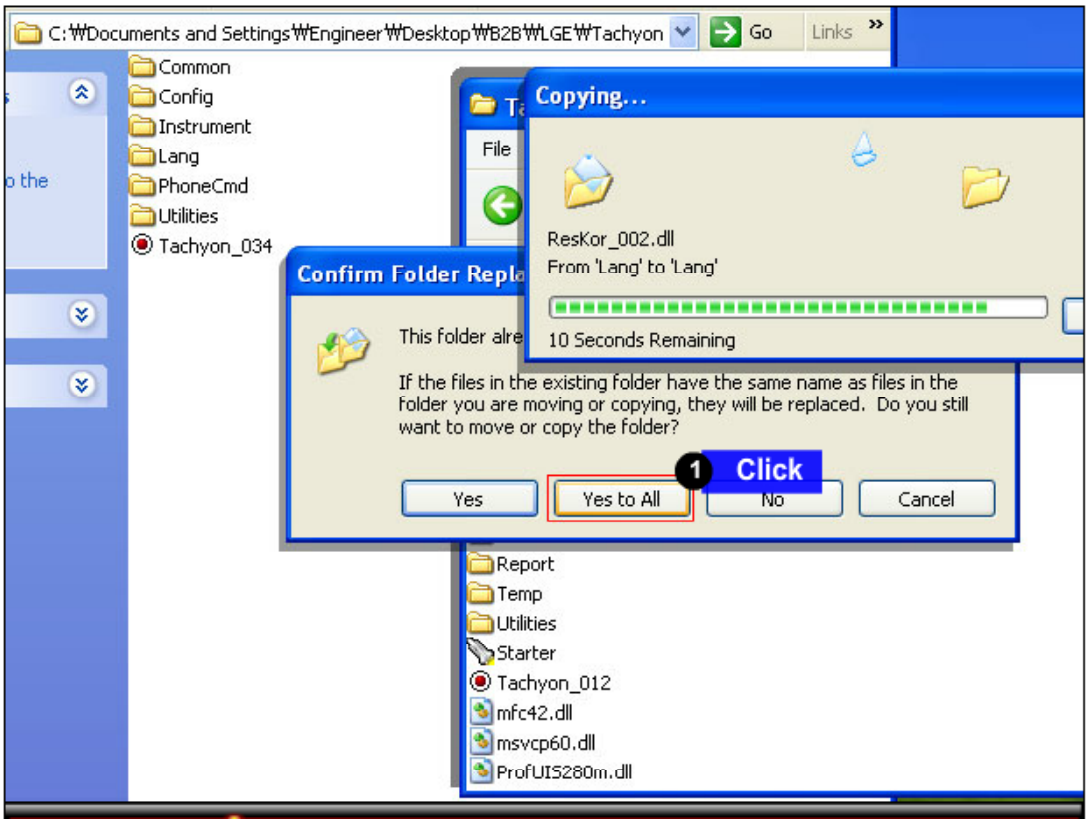

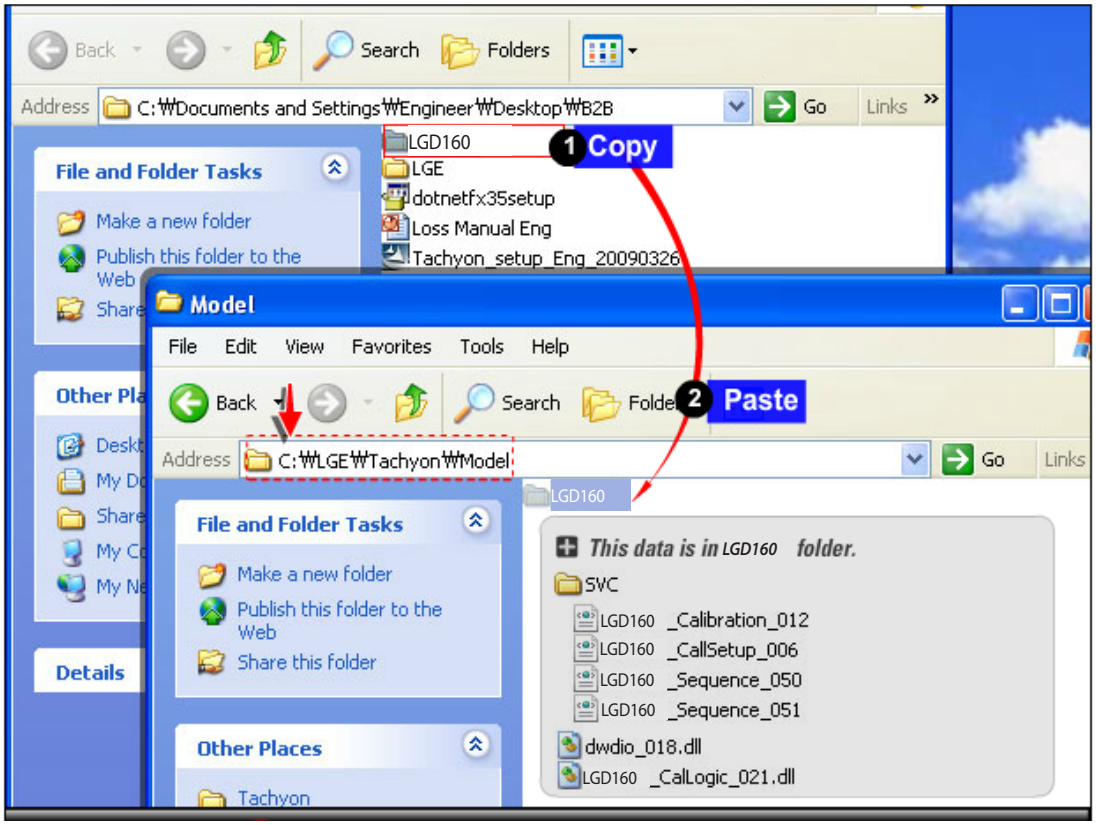

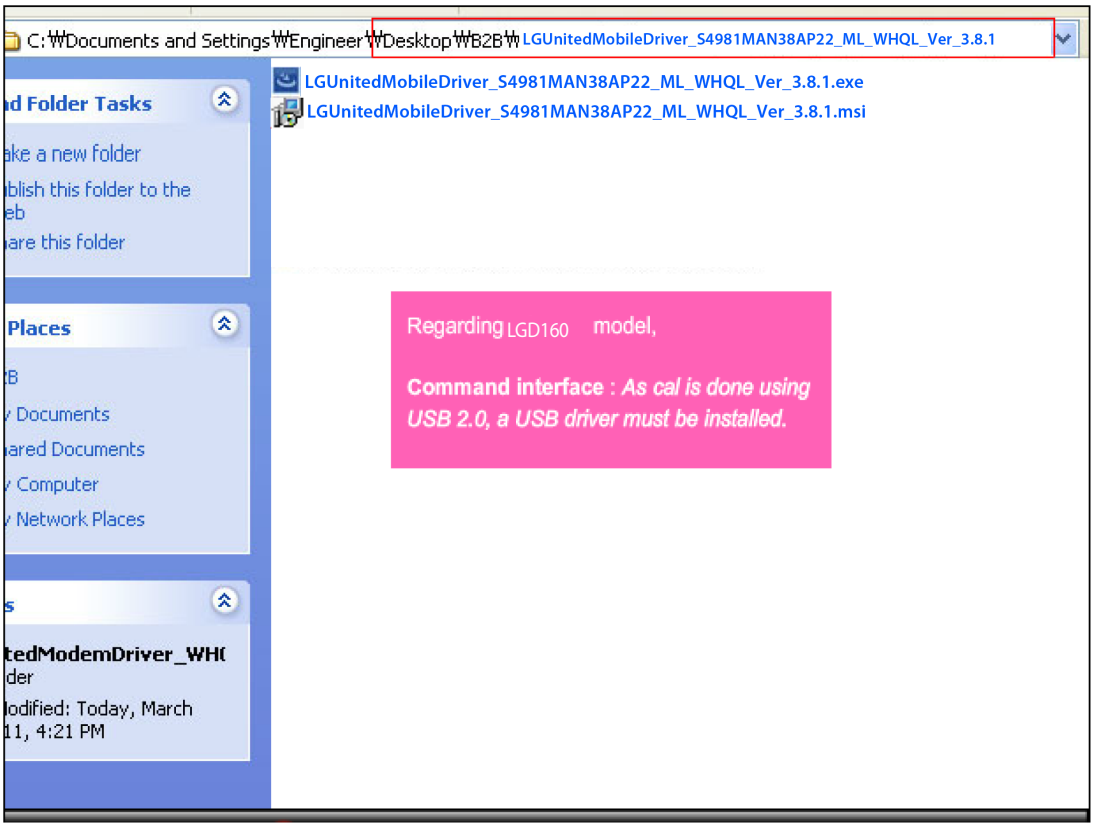

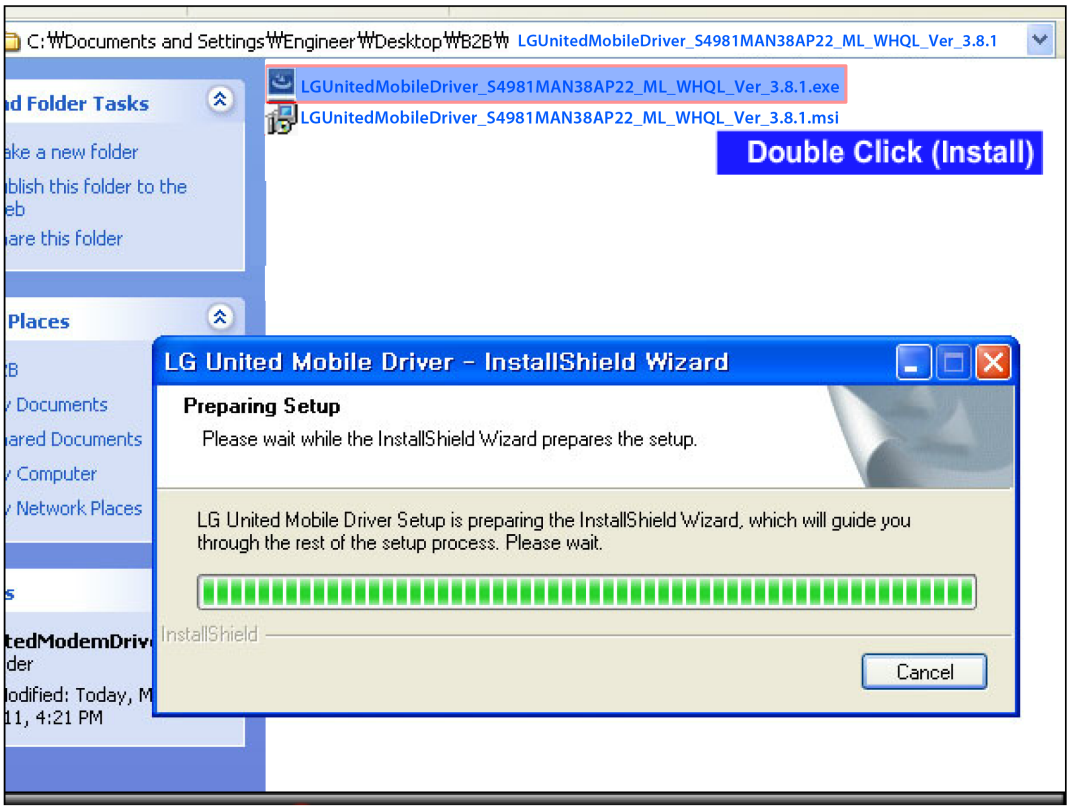

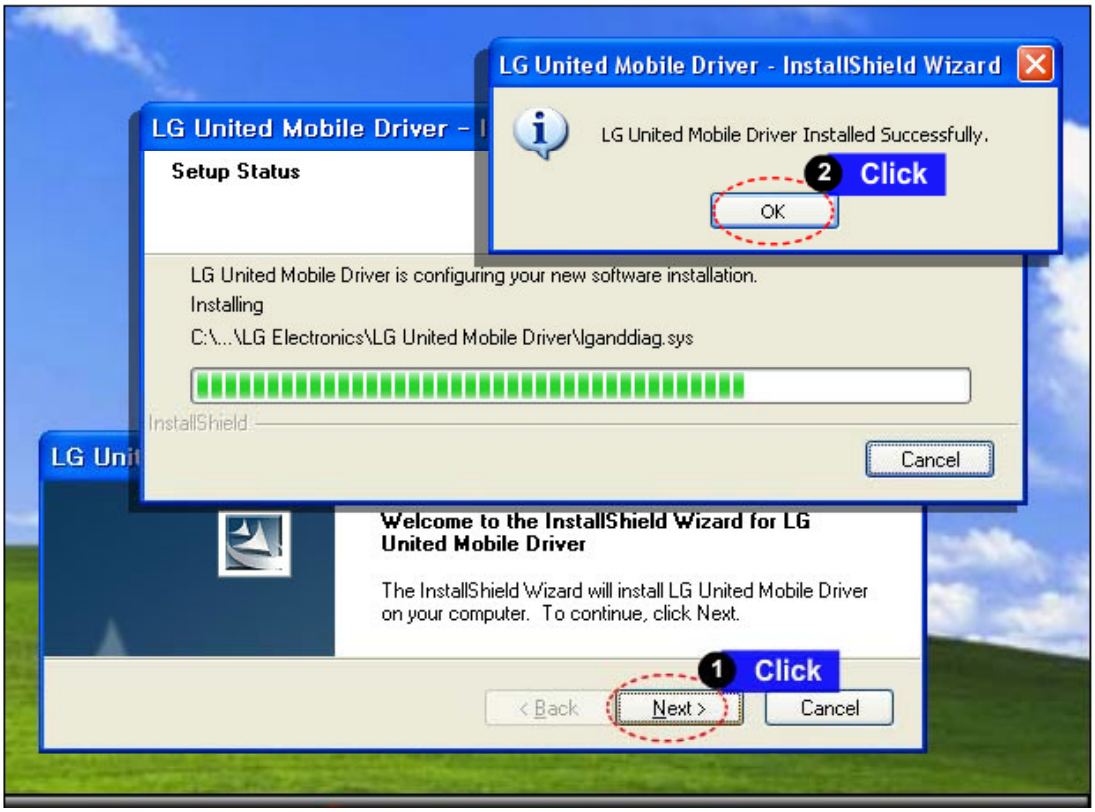

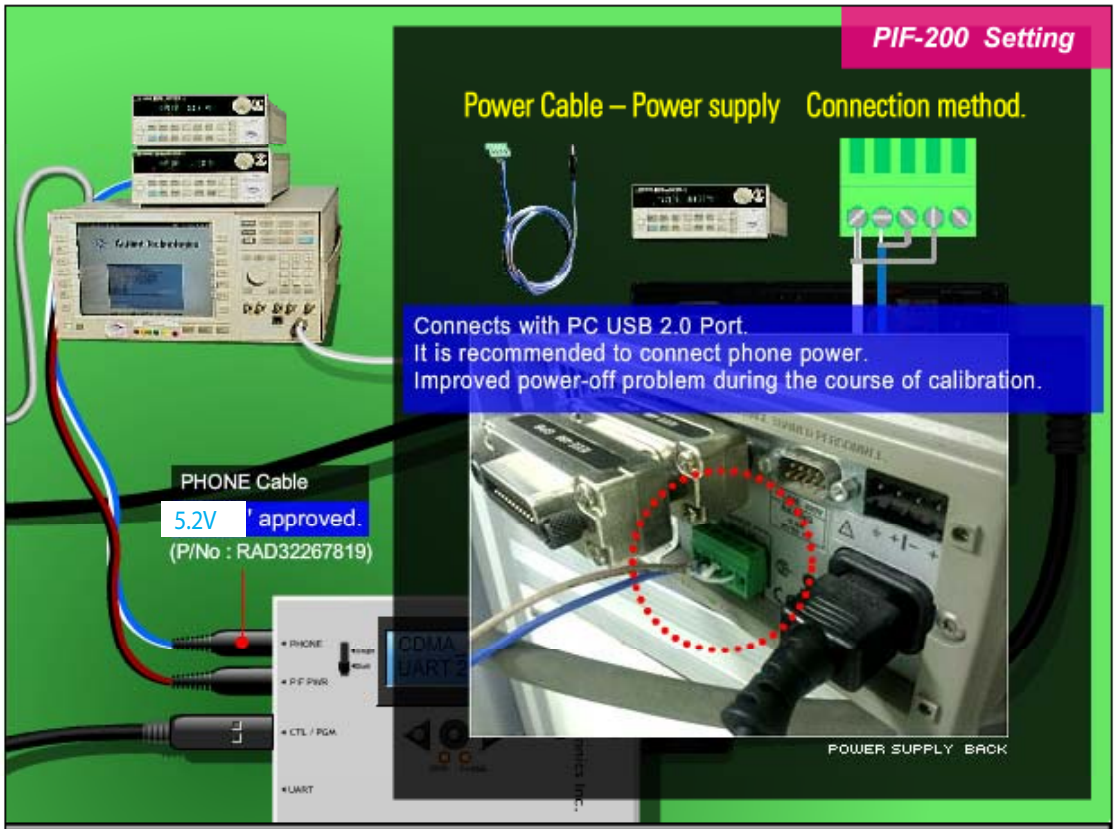

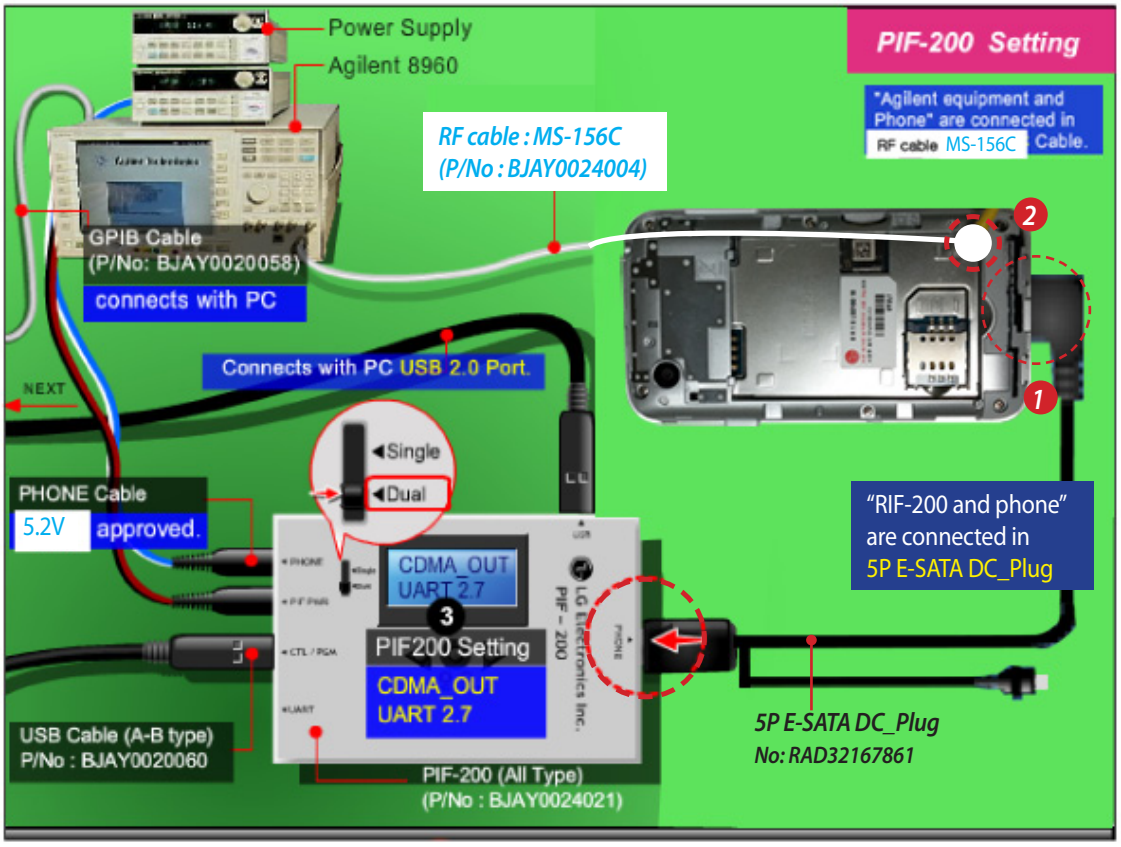

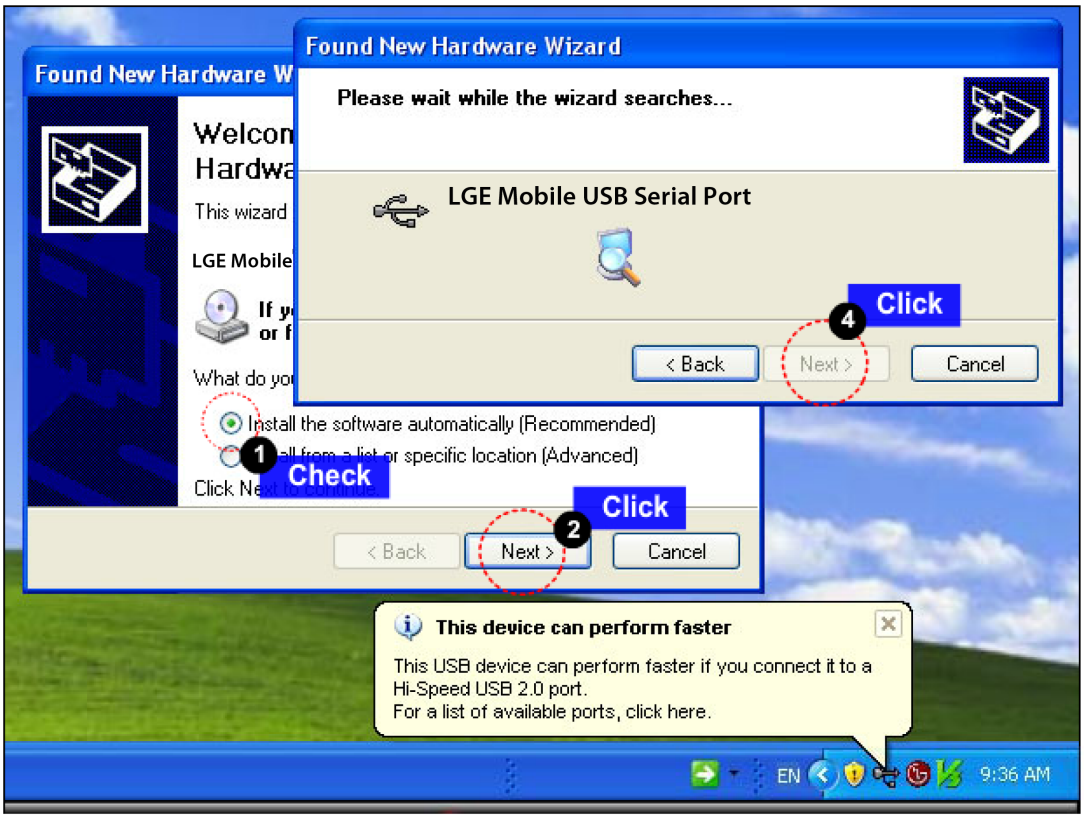

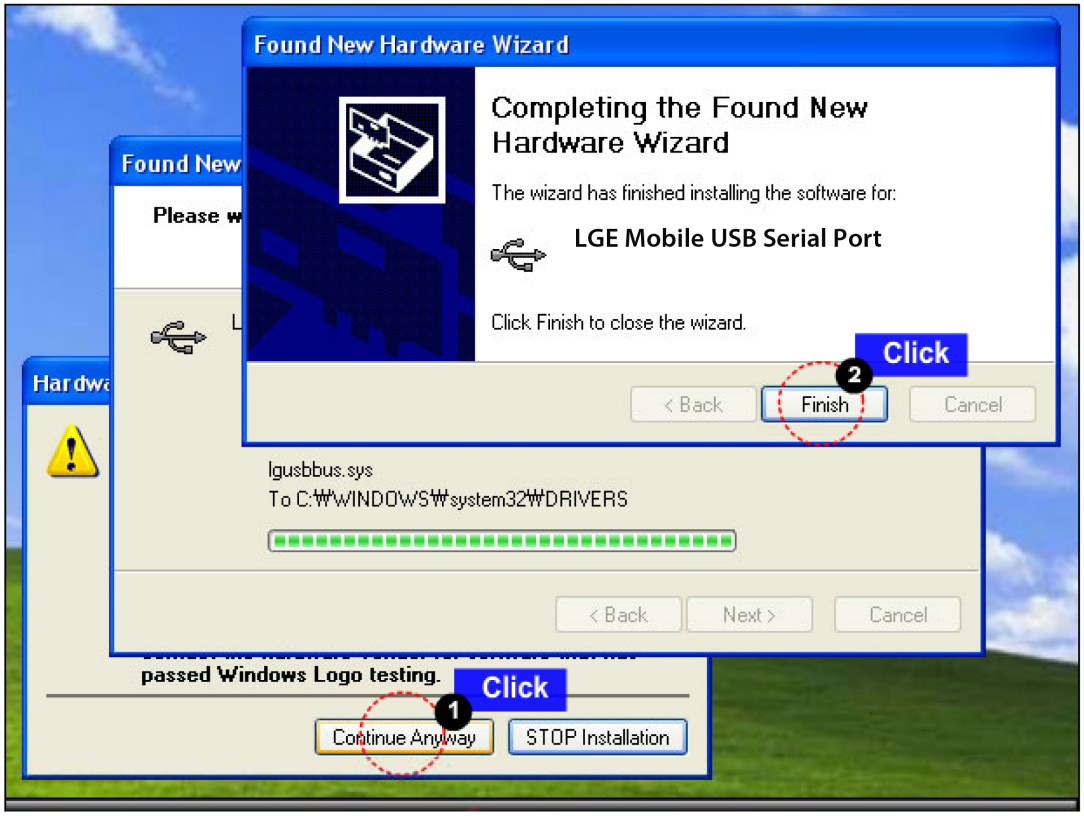

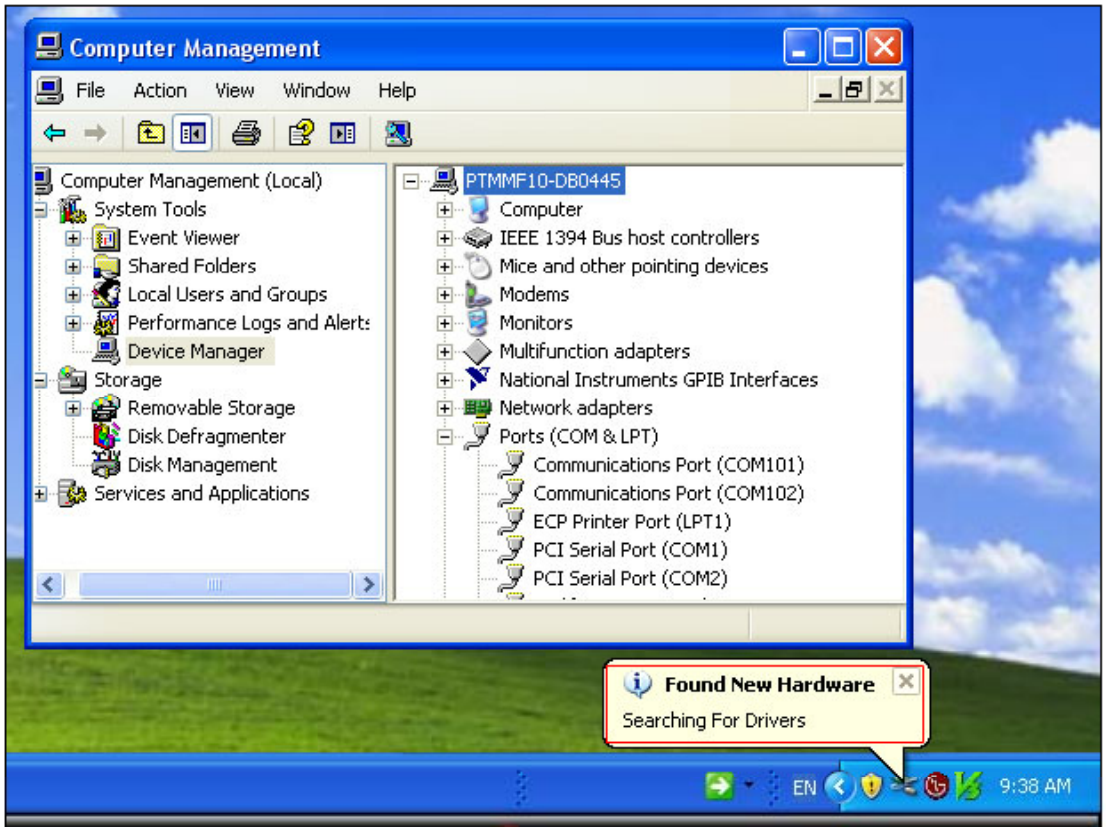

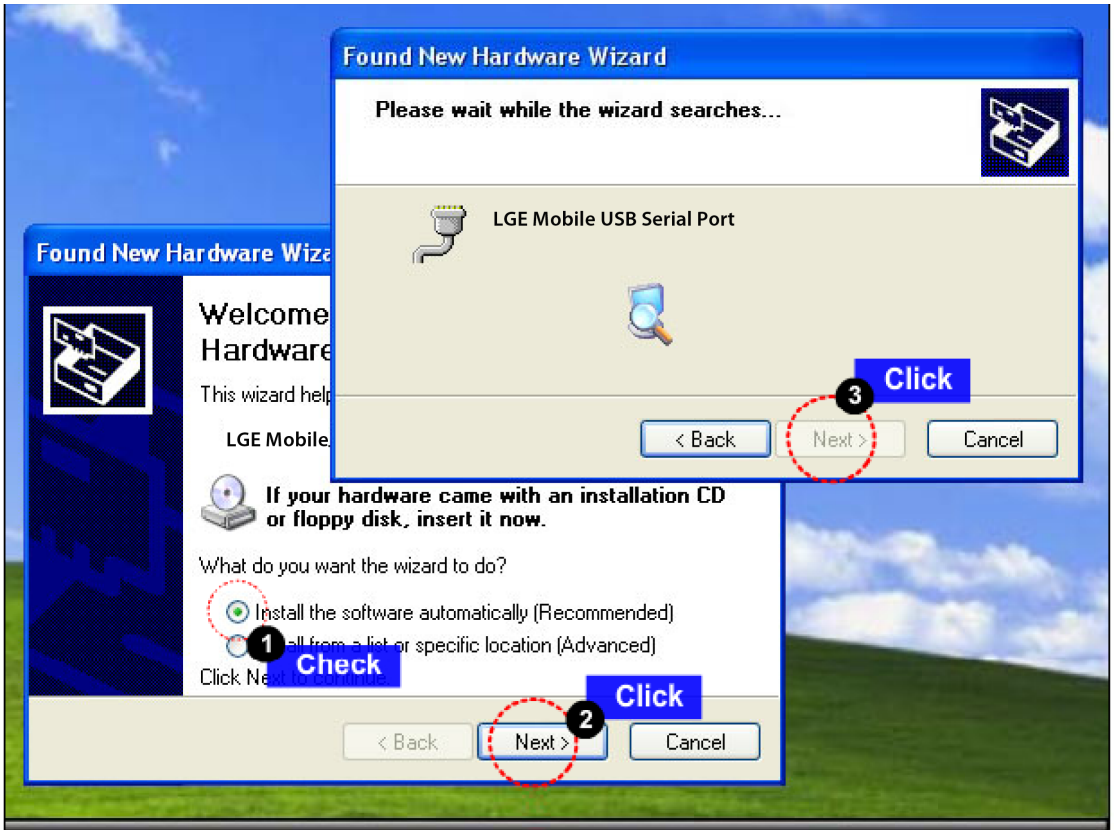

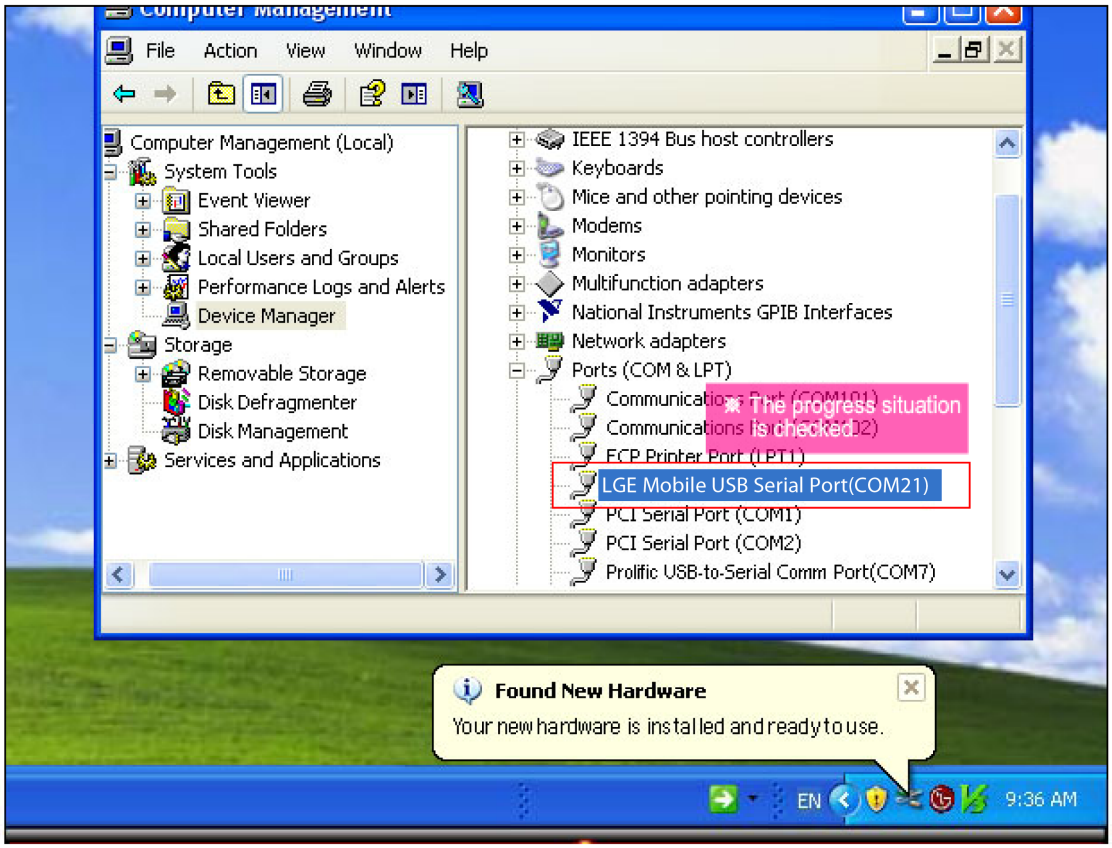

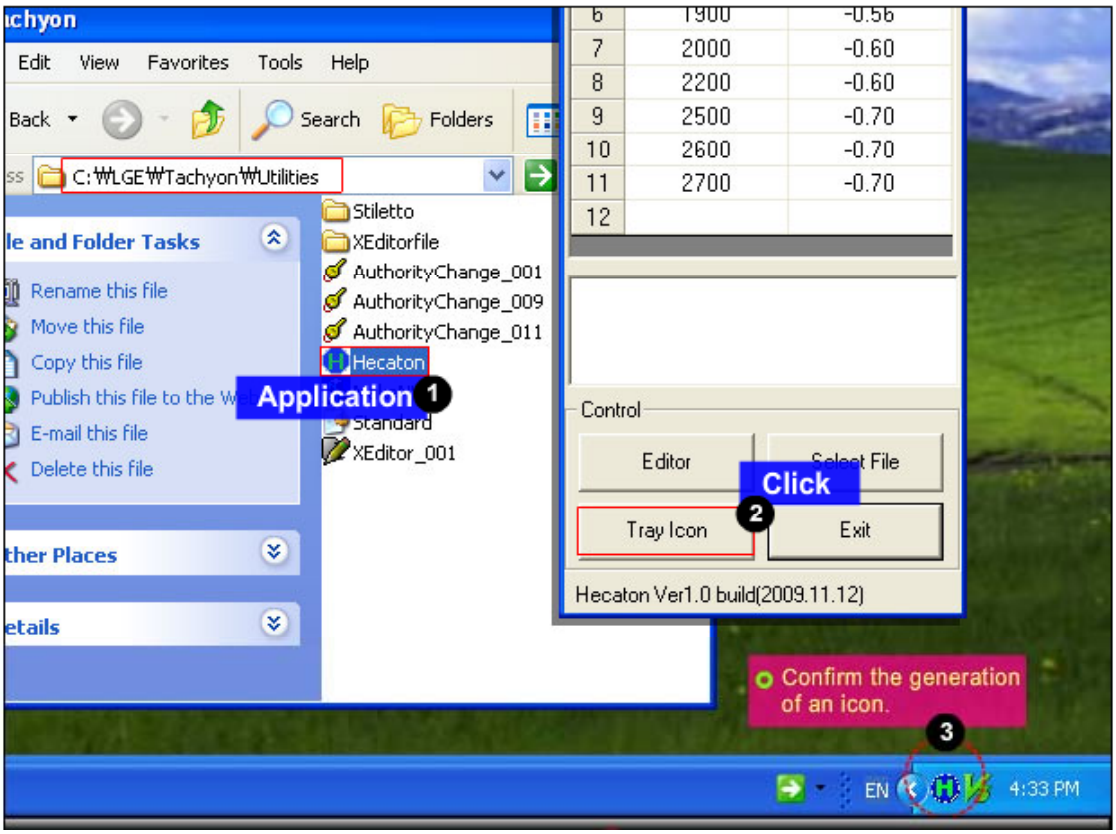

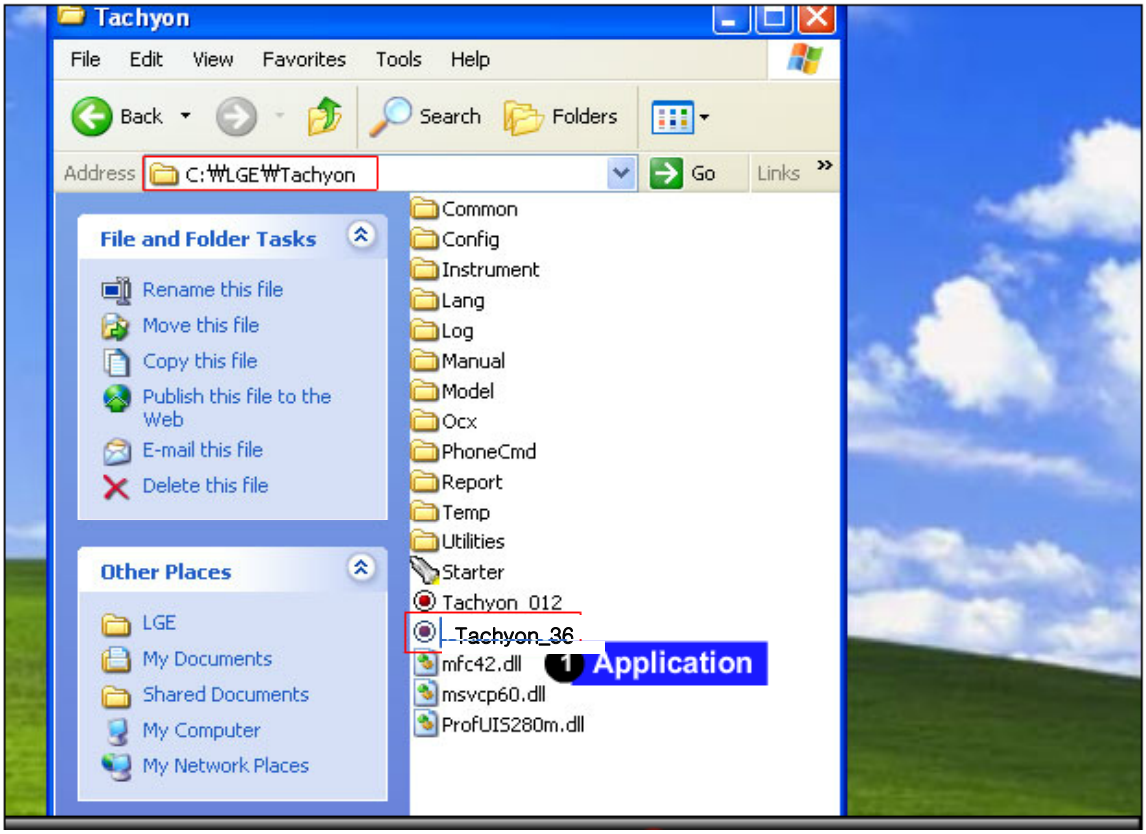

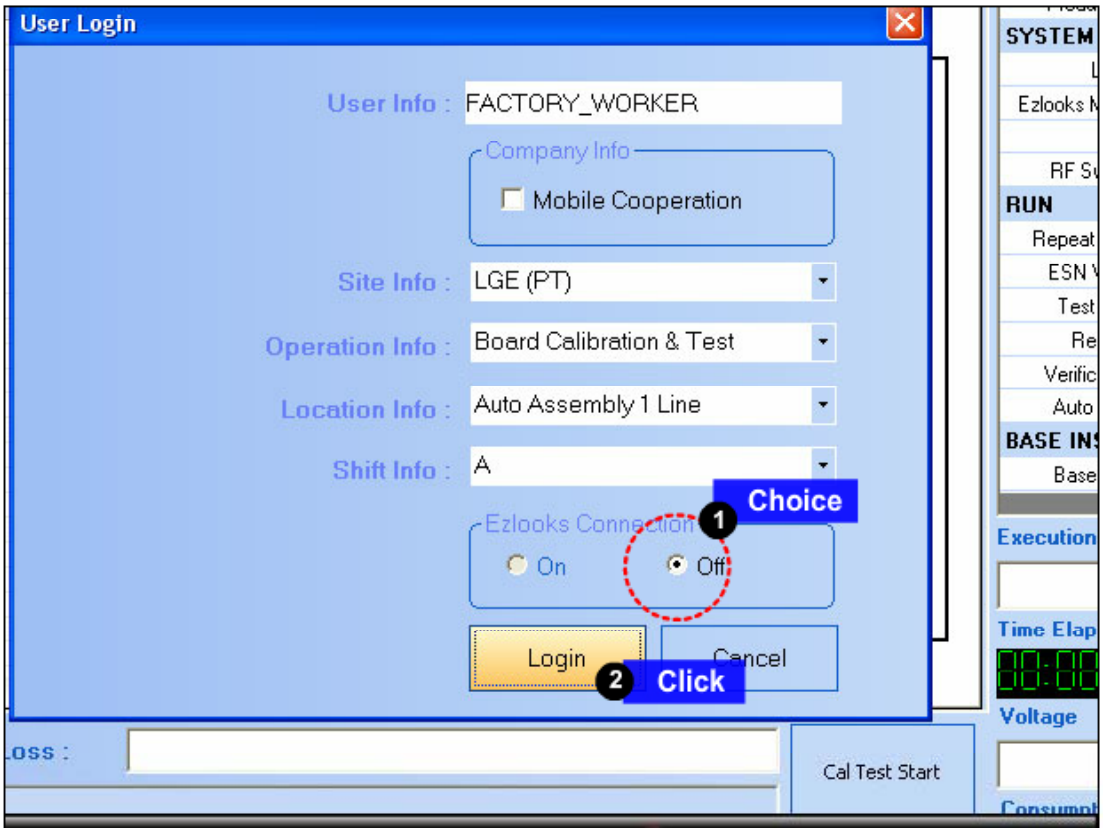

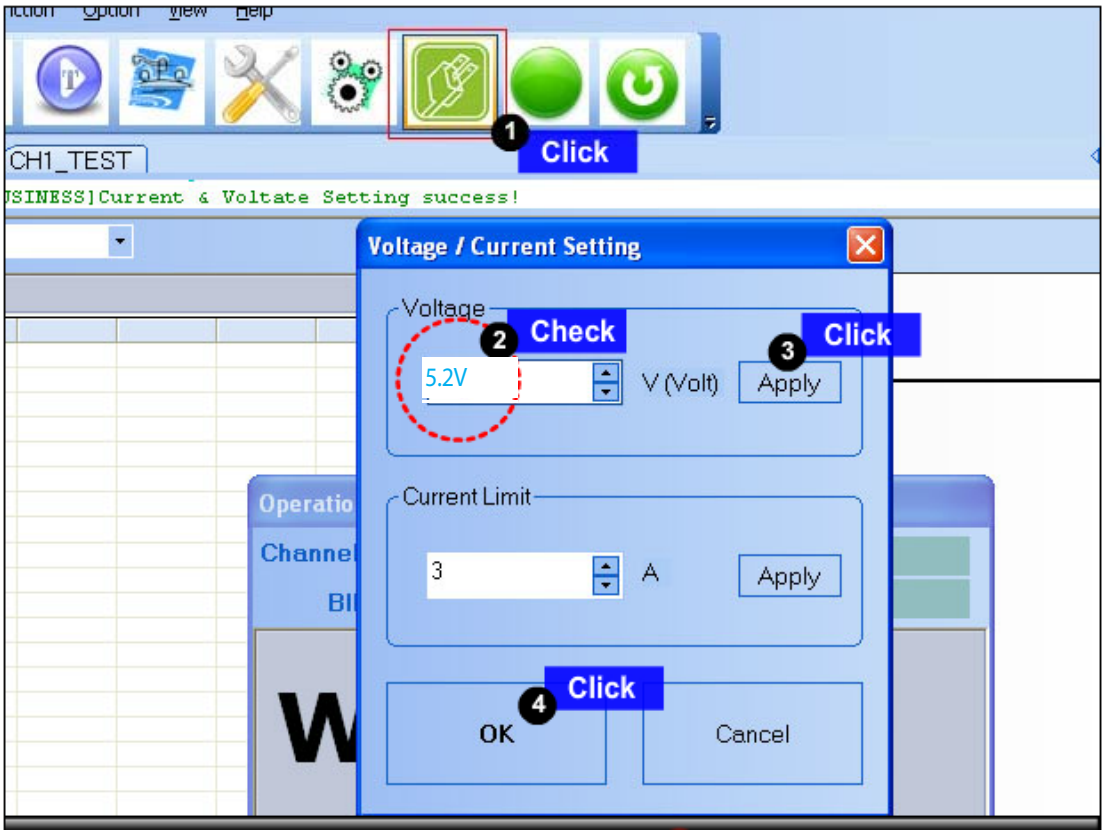

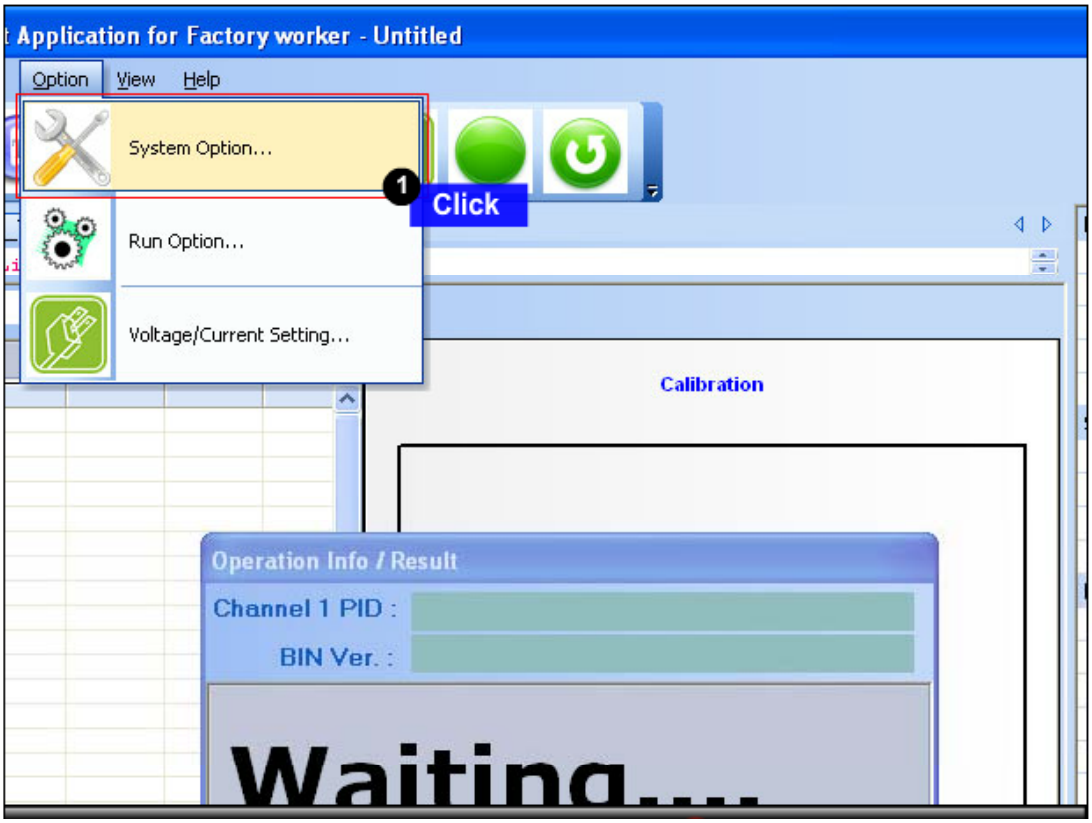

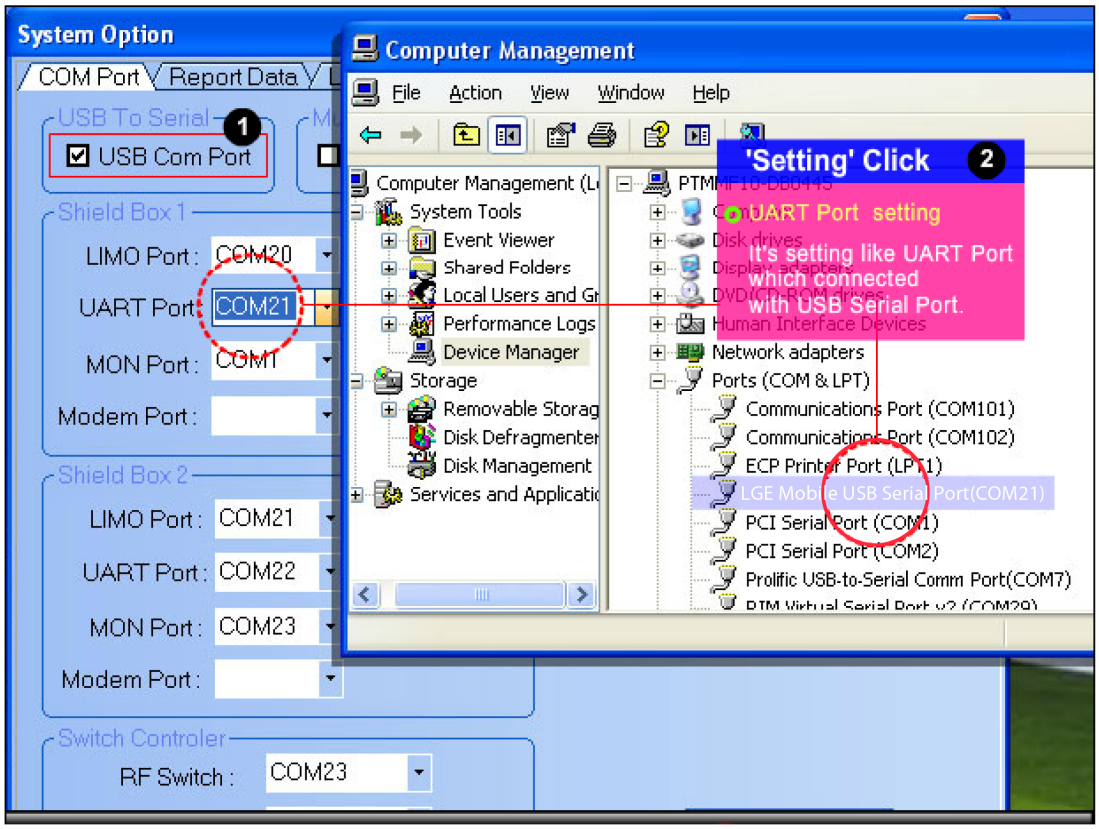

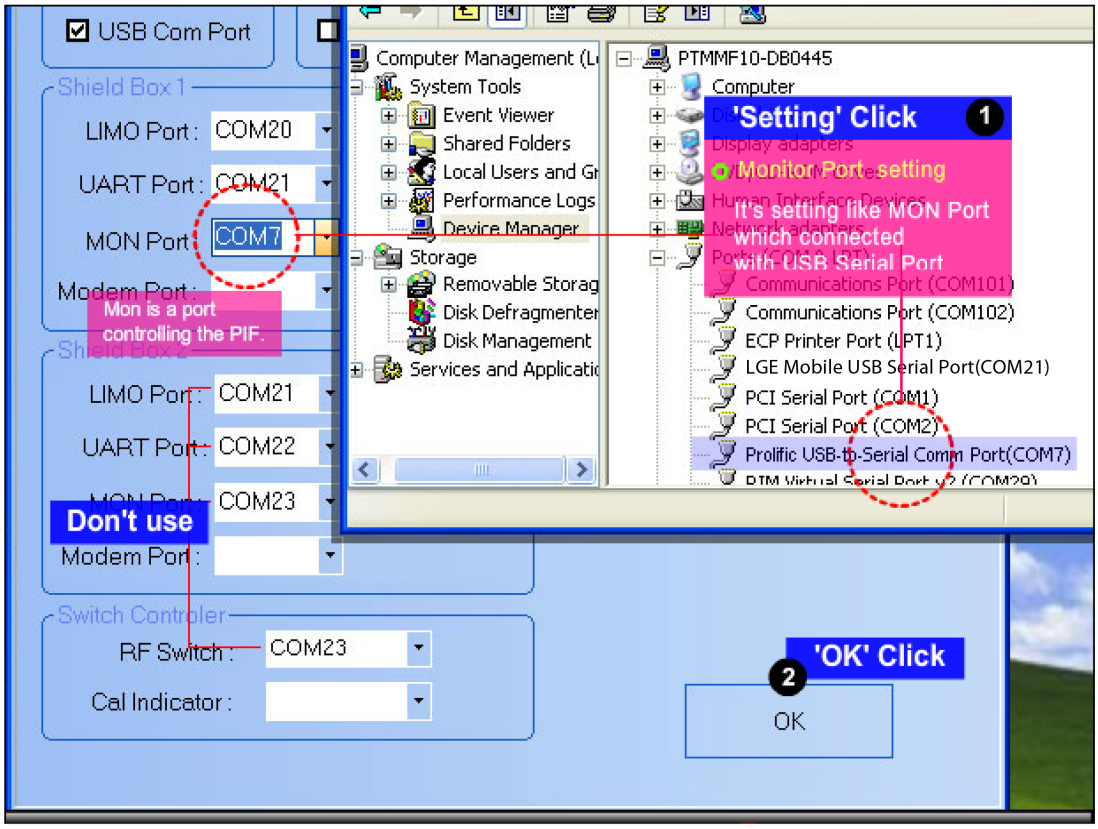

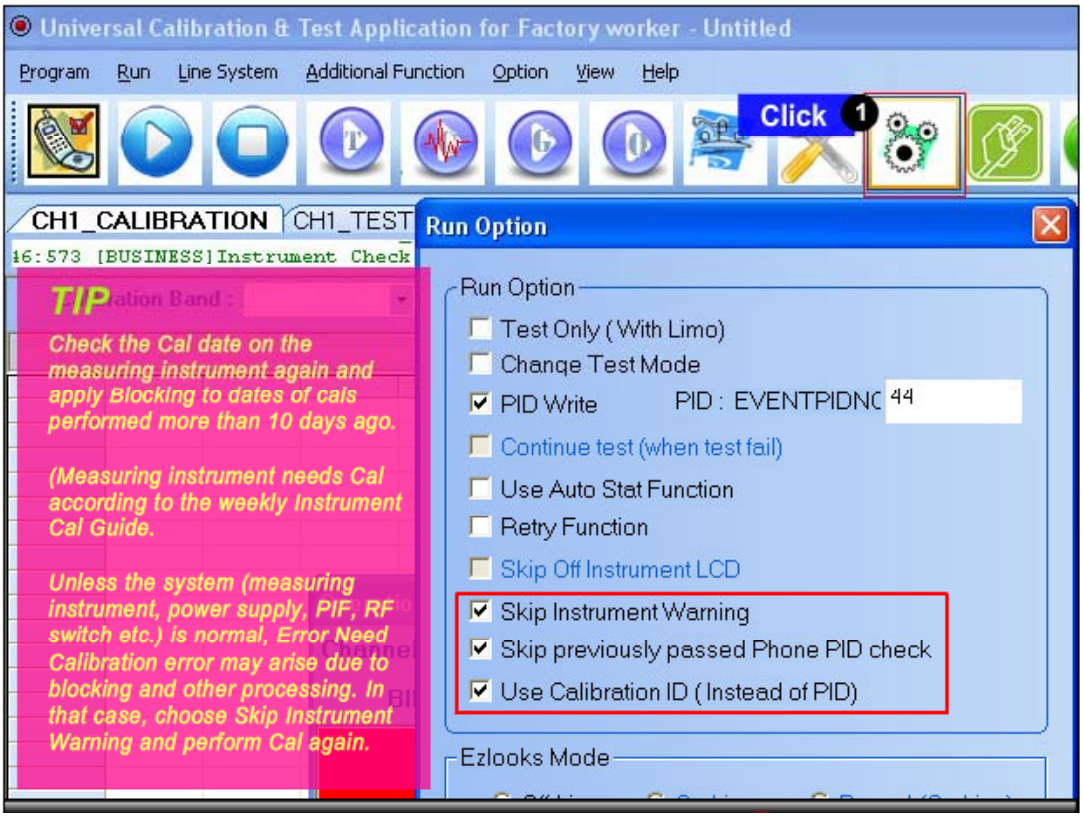

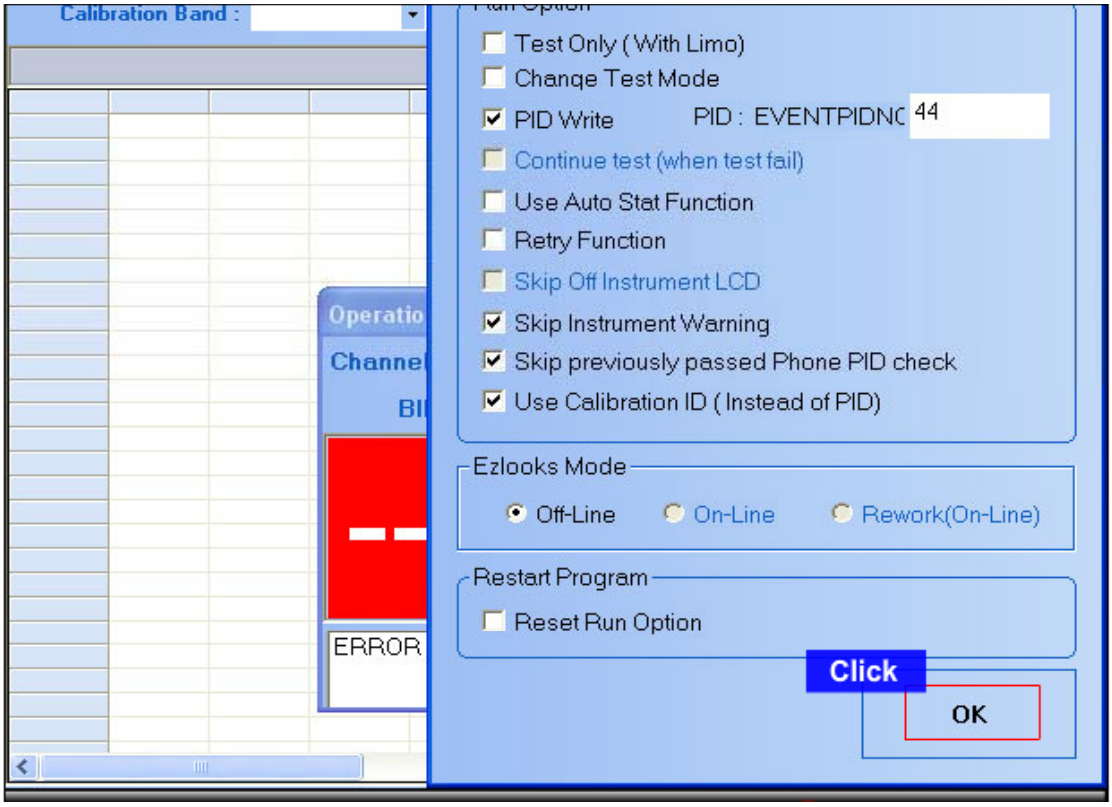

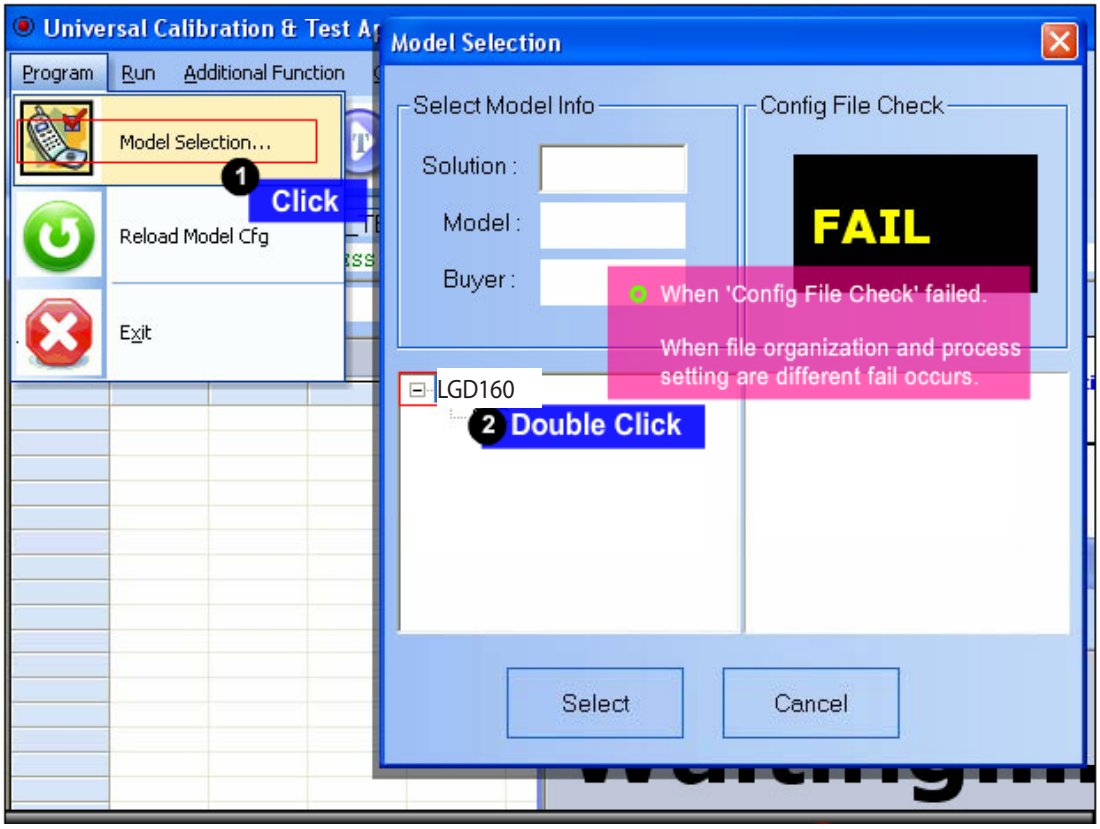

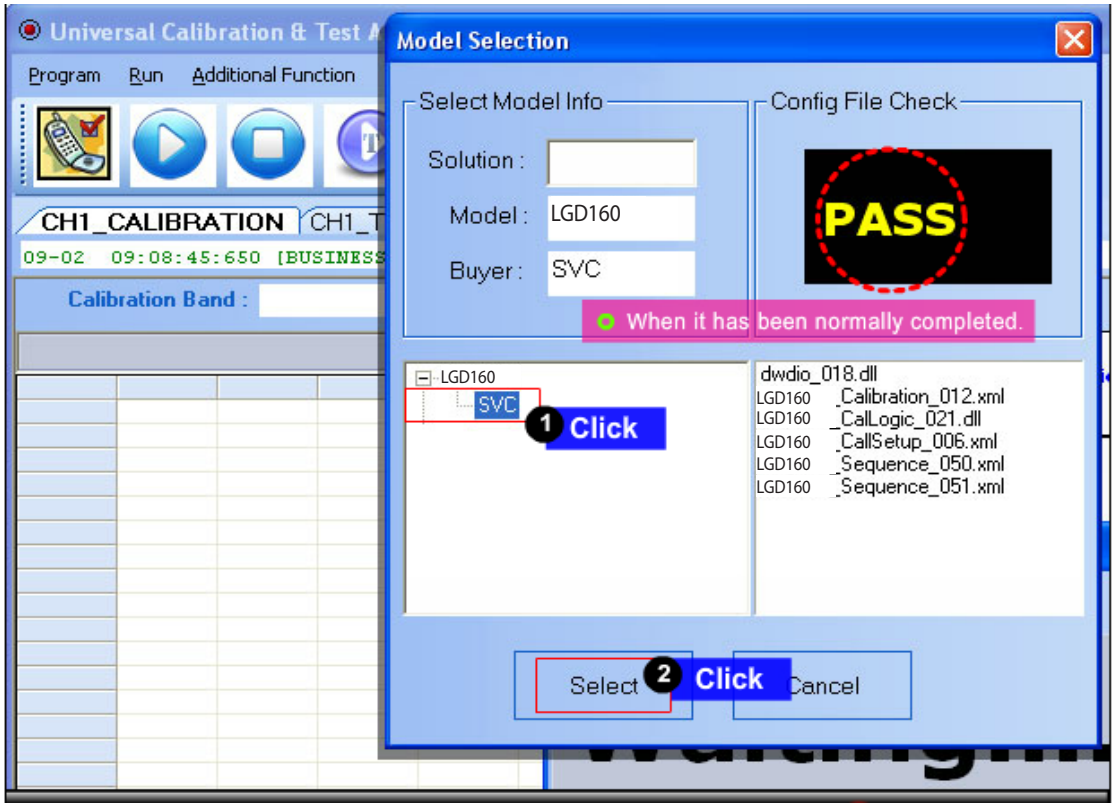

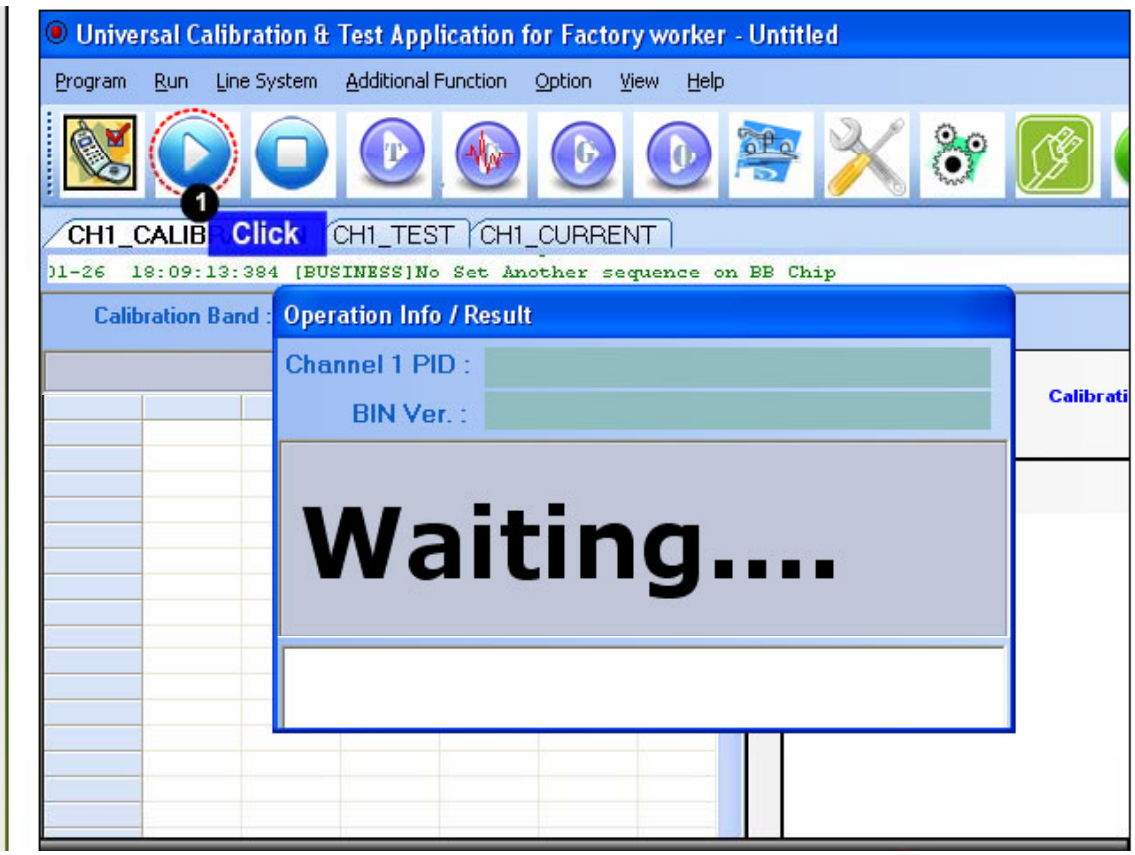

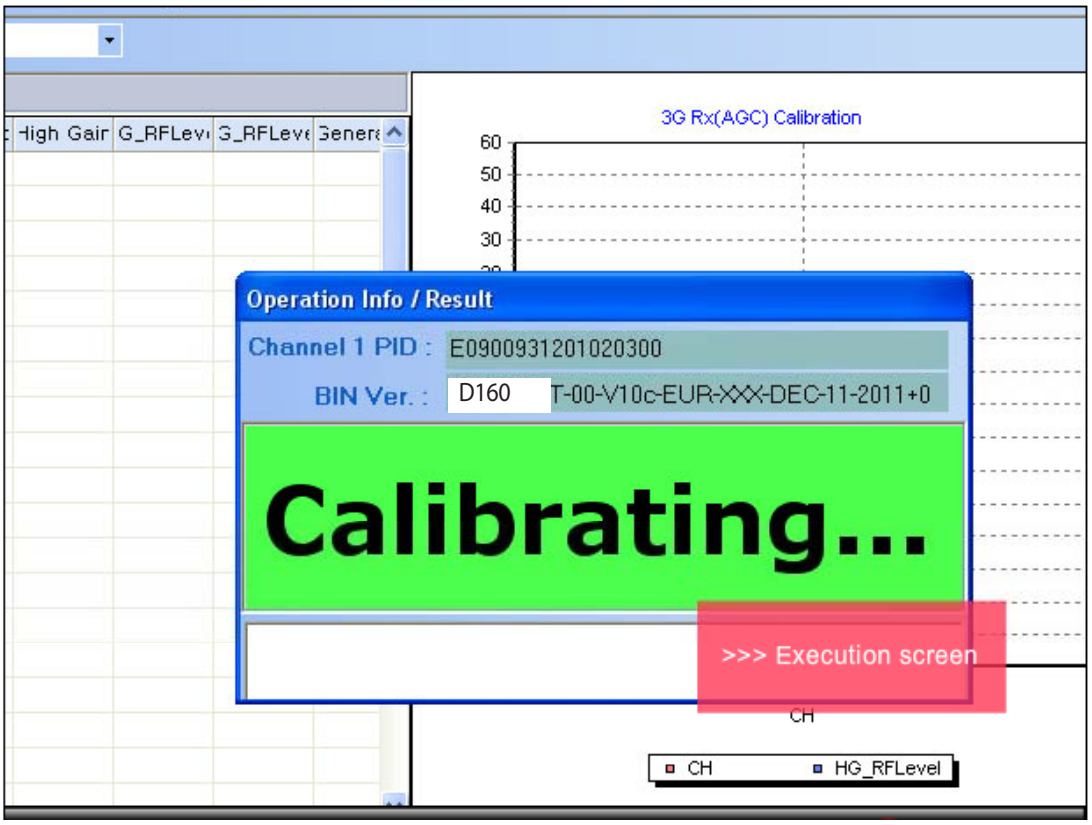

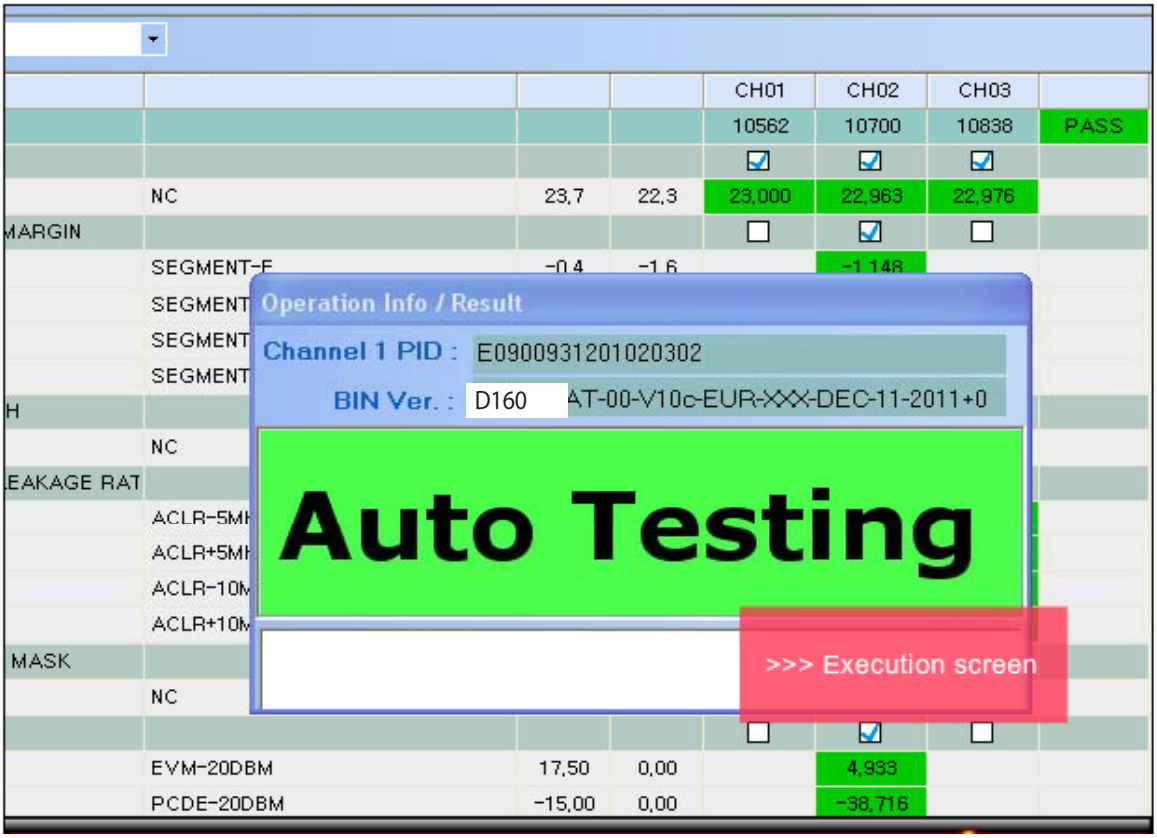

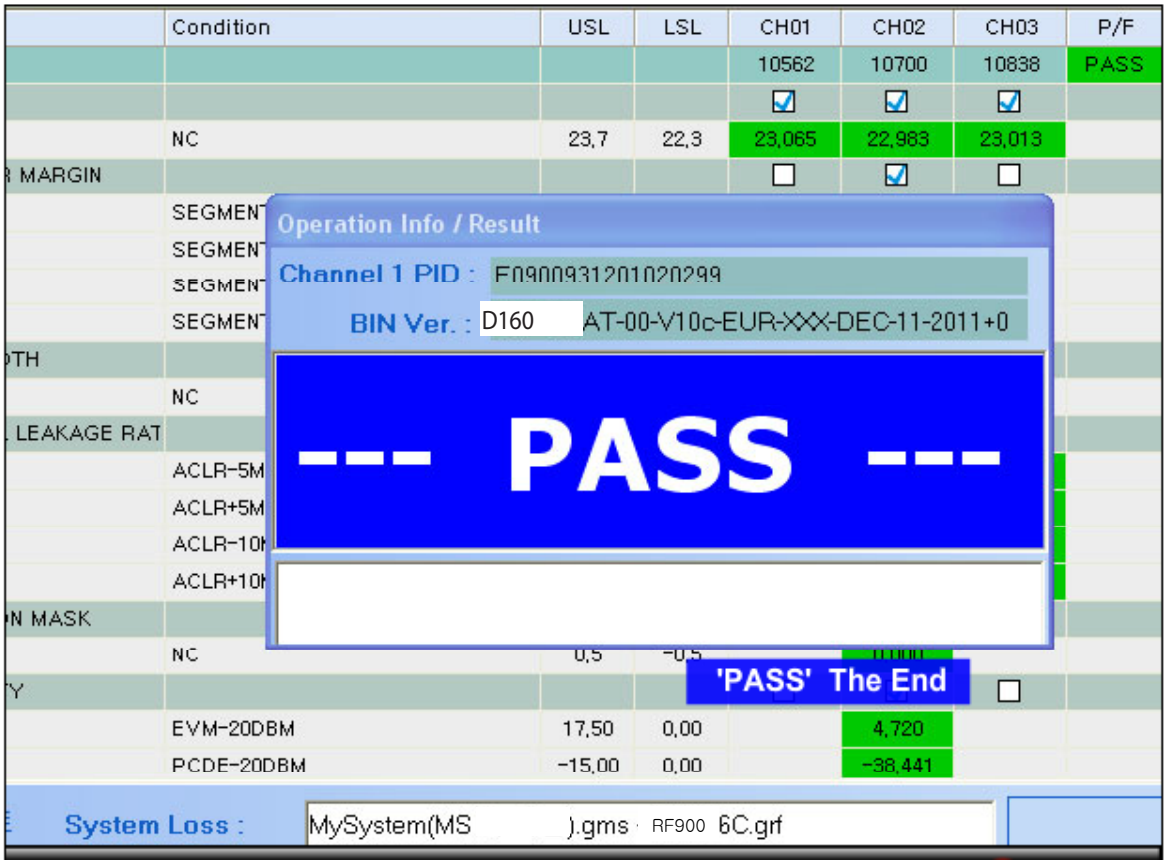

10. HIDDEN MENU

	**Hidden Menu Start** Start shortcut keys: 3845#*160#
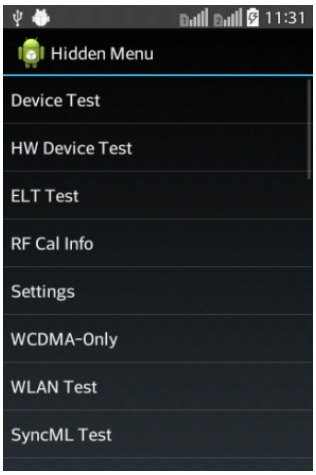	**Hidden Menu** Start the desired menu: Menu, click
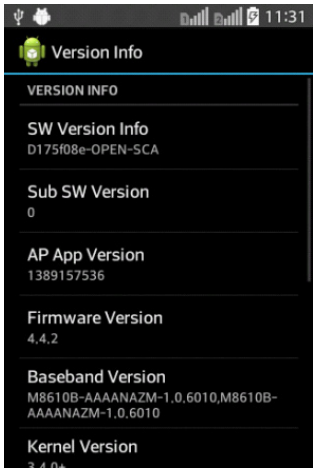	**Version Info** Classified Information representation -> Hidden Menu -> Settings -> Version Info

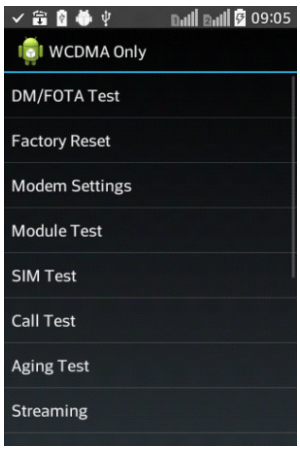

Factory Reset

Format SD Card : SD Card Data reset

Factory Reset : Reset as default Factory Settings

Delete Userdata : Disabled

-> Hidden menu

-> WCDMA-Only

-> Factory Reset

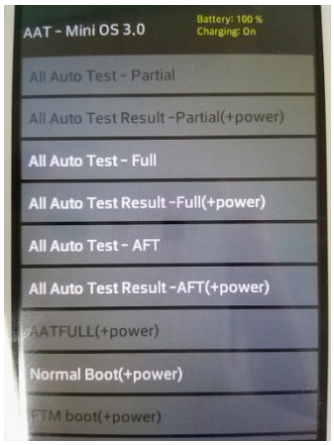

AAT Device Test

-> Hidden menu

-> Device Test

-> press 'OK' run AAT (after restart device)

AAT – Mini OS 3.0:

-> You can test all functions automatically

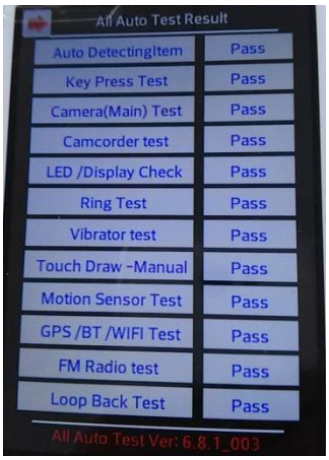

Auto All Test Result

-> AAT – Mini OS 3.0

-> All Auto Test Result –Full (touch + power key)

-> You can check Test Results

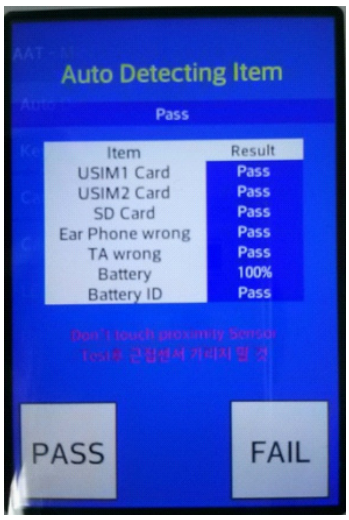	**Auto Detecting Item** Check below Items -> USIM Card & USIM Card2 : connecting both SIMs is PASS -> SD Card : connecting is PASS -> Ear Phone : No connecting is PASS -> Charging Mode : connecting is PASS -> Battery : higher than 20% is PASS
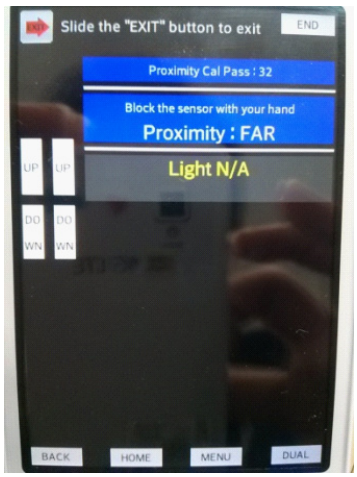	**Key Press Test** Check below Items Up/Down key : Hard Key Power key : Hard Key Menu key : Hard Key Home key : Hard Key Back key : Hard Key SIM switch key : Hard Key Proximity Sensor : Blind the Proximity sensor
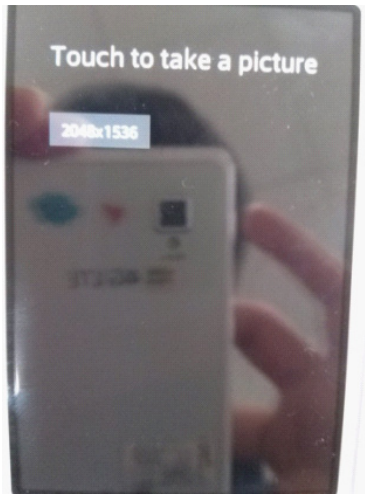	**Camera Test – Snapshot** Touch screen to capture

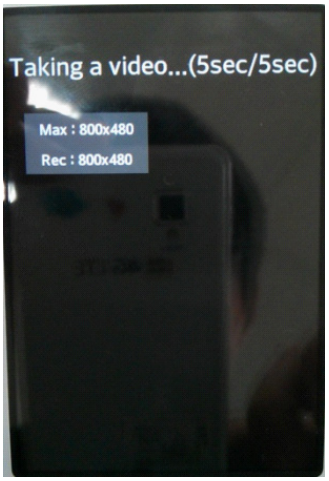	**Camera Test - Camcoding** Camera is recoding for 5 seconds and Touch the screen : play the recording video
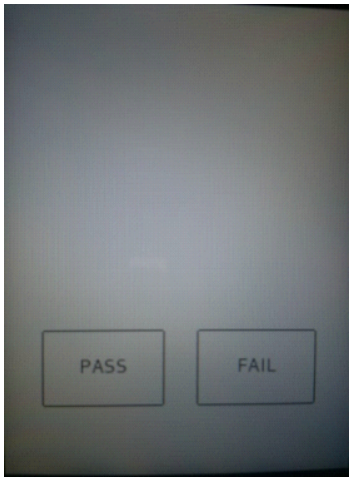	**2D LCD Display Test** Check Black & White Color
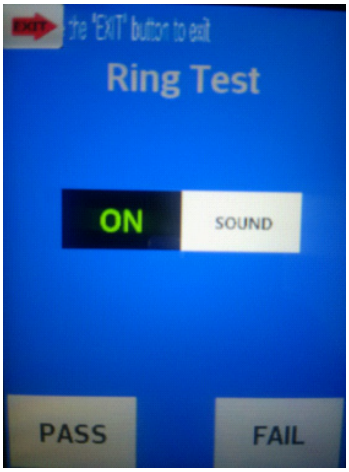	**Sound Test** Auto play music Move slide button on-off : check music on-off

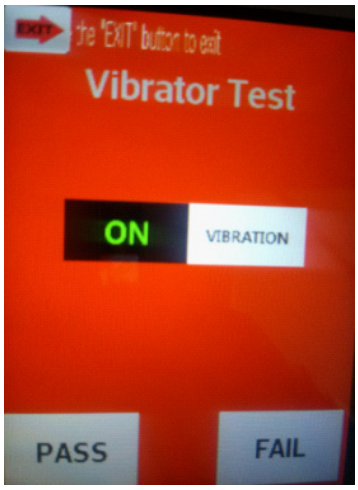	**Vibrator Test** Auto play vibrator Move slide button on-off : check vibrator on-off
	**Touch Drawing Test** Draw a guide line : check 5point draw cross point(top left, top right, bottom left, bottom right, center)
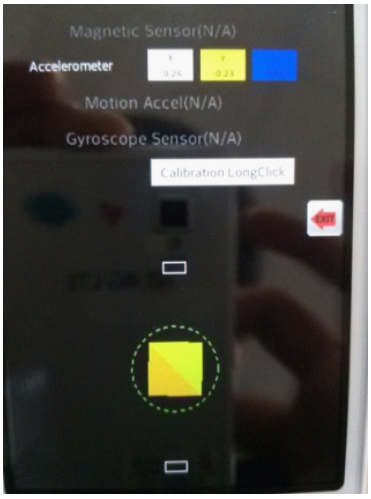	**Motion Sensor Test** Check 3 positions -> Position side -> Position horizontally -> Position Vertically

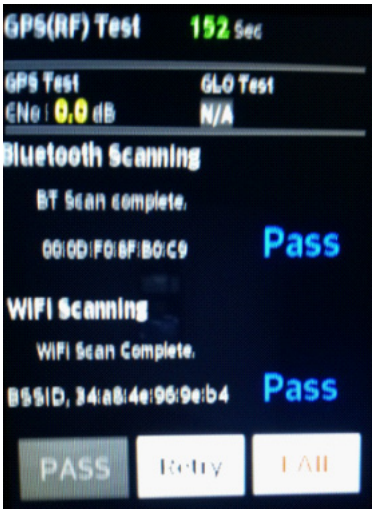	**GPS BT Wifi Test** GPS(RF) test : some value : OK Bluetooth Scanning is PASS : OK WiFi Scanning is PASS : OK	
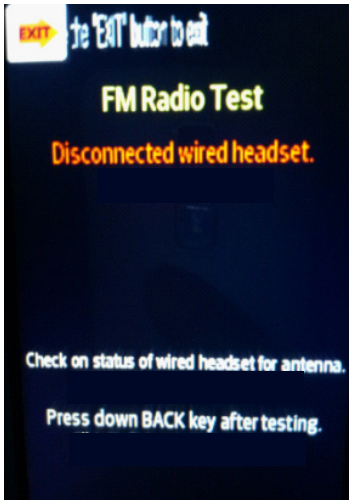	**FM Radio Test** 87.5 Mhz is scanned automatically -> Connect ear-jack	
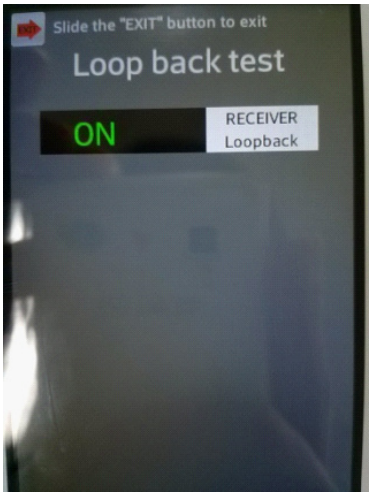	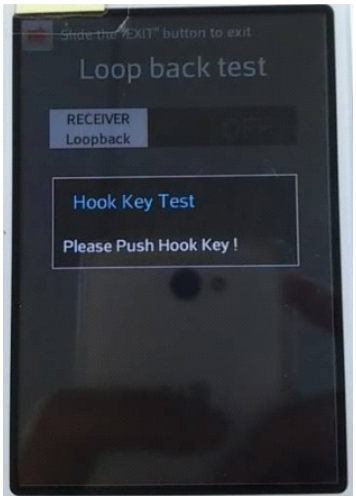	**Sound Loopback Test** "On" is test mode on "Off" is test mode off Connect ear-jack(Popup window show) and press hook-key(removed popup) And disconnect ear-jack

11.DISASSEMBLE GUIDE

1. Disassemble Battery Cover

Take apart the battery cover using neil-hole below

2. Disassemble Battery & Screw

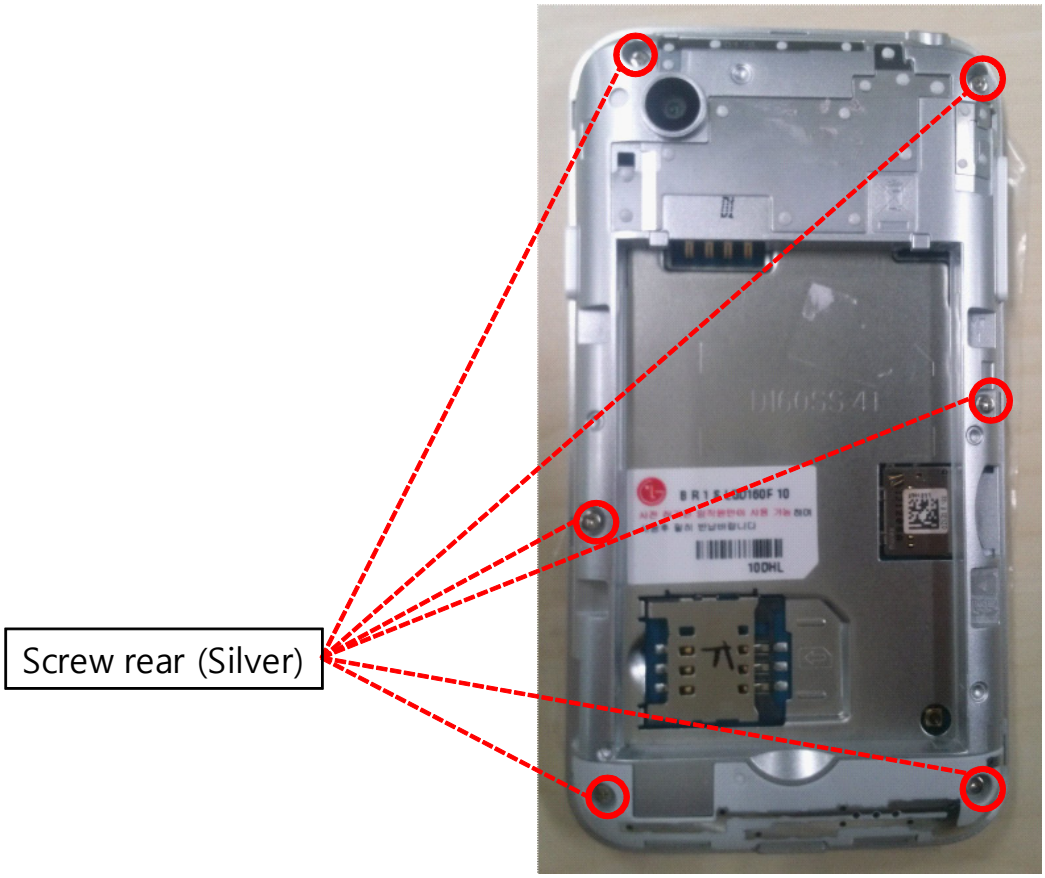

Take apart the battery and remove screw (6points)

3. Disassemble Rear Cover

Hook off the bottom of Front cover by using a disassembling paddle
Take apart the Rear cover out of Front cover starting from left

4. Disassemble Main PCB

Take the FPCB out of main PCB

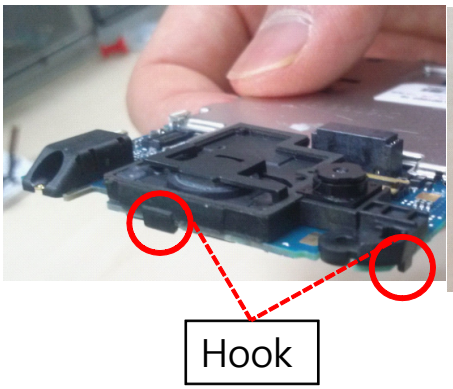

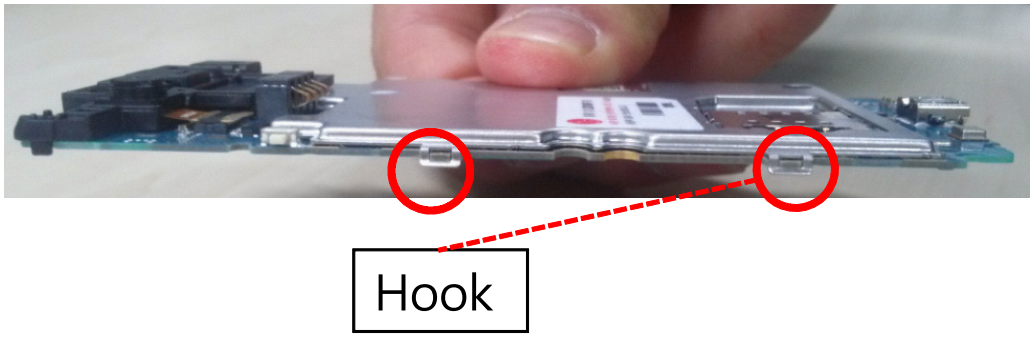

5. Disassemble touch & LCD

Detach the LCD FPCB	Take apart the touch window out of Front cover

Take apart the LCD out of Front cover

7. Complete disassembling D160

12. EXPLODED VIEW & REPLACEMENT PART LIST

12.1 EXPLODED VIEW(SBOM)

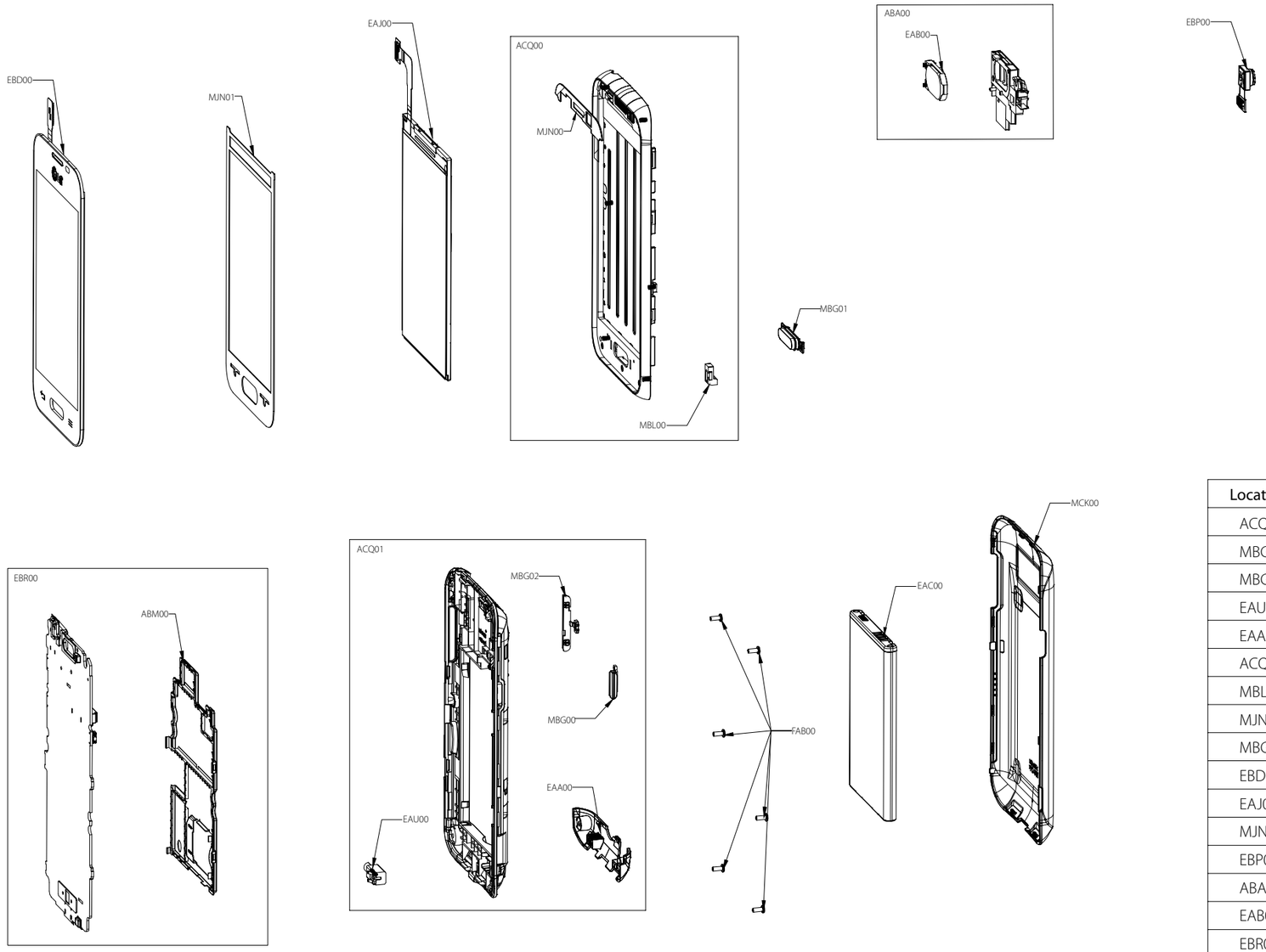

Location	Description
ACQ01	Cover Assembly,Rear
MBG00	Button
MBG02	Button,Side
EAU00	Motor,DC
EAA00	PIFA Antenna,Multiple
ACQ00	Cover Assembly,Front
MBL00	Cap
MJN00	Tape,Window
MBG01	Button
EBD00	Touch Window Assembly
EAJ00	LCD,Module-TFT
MJN01	Tape,Window
EBP00	Camera Module
ABA00	Bracket Assembly
EAB00	Speaker,Dual Mode
EBR00	PCB Assembly,Main
ABM00	Can Assembly,Shield
FAB00	Screw,Machine
EAC00	Rechargeable Battery,Lithium Ion
MCK00	Cover,Battery

12.2 Replacement Parts <Mechanic component>

Note: This Chapterisused for reference,Part order is ordered by SBOM standard on GCSC

Level	Location No.	Description	Part Number	Spec	Remark
1	AGQ000000	Phone Assembly	AGQ87668101	LGD160.ABALBK BK:BLACK BLACK -	
2	MEZ002100	Label,Approval	MLAA0062303	COMPLEX KB770 DEUBK ZZ:Without Color -	
2	ACQ100400	Cover Assembly,EMS	ACQ87230401	LGD160.ABALBK BK:BLACK BLACK -	
3	ACQ01	Cover Assembly,Rear	ACQ87000202	LGD160.AITABK ZZ:Without Color -	
4	ACQ105800	Cover Assembly Rear(SVC)	ACQ86981602	LGD160.AITABK ZZ:Without Color -	
5	MBG00	Button	MBG65004102	COMPLEX LGD160.AITABK WA:White -	
5	MEZ000900	Label,After Service	MLAB0001102	COMPLEX C2000 CGRSV WA:White C2000 USASV DIA 4.0 PRINTING,	
5	MCK063300	Cover,Rear	MCK67937302	MOLD PC LGD160.AITABK BK:Black -	
5	MCQ009400	Damper,Camera	MCQ67489401	COMPLEX LGL34C.ATRFBK ZZ:Without Color -	
5	MJN089300	Tape,Window	MJN68636501	COMPLEX LGL34C.ATRFBK ZZ:Without Color -	
5	MKC009400	Window,Camera	MKC64739101	COMPLEX LGL34C.ATRFBK ZZ:Without Color -	
5	MBG02	Button,Side	MBG65102802	COMPLEX LGD160.AITABK ZZ:Without Color -	
3	ACQ003400	Cover Assembly,Bar	ACQ87000702	LGD160.AITABK ZZ:Without Color -	
4	ACQ00	Cover Assembly,Front	ACQ87000302	LGD160.AITABK ZZ:Without Color -	
5	ACQ033200	Cover Assembly Front(Sub)	ACQ86909602	LGD160.AITABK BK:Black -	
6	MCK032700	Cover,Front	MCK67917202	MOLD PC LGD160.AITABK BK:BLACK BLACK -	

Level	Location No.	Description	Part Number	Spec	Remark
6	MDQ000000	Frame	MDQ63698301	PRESS STS 304 0.4 LGL34C.ATRFBK ZZ:Without Color STS304 1/2H	
6	MET099500	Insert,Nut	MICE0016905	COMPLEX MECH_COMMON ZZ:Without Color -	
5	MBL00	Cap	MBL65677801	MOLD PC LGL34C.ATRFBK ZZ:Without Color -	
5	MJN00	Tape,Window	MJN68673301	COMPLEX LGL34C.ATRFBK ZZ:Without Color -	
5	MEG000000	Holder	MEG63538901	MOLD RUBBER LGD175F.ABRAWH WH:WHITE WHITE -	
5	MDS000000	Gasket	MDS64416001	COMPLEX LGL34C.ATRFBK ZZ:Without Color -	
5	MCR000000	Decor	MCR65228701	COMPLEX LGL34C.ATRFBK ZZ:Without Color -	
4	MCQ00	Damper	MCQ67548301	COMPLEX LGL34C.ATRFBK ZZ:Without Color -	
4	MJN061100	Tape,Protect	MJN68700501	COMPLEX LGL34C.ATRFBK ZZ:Without Color -	
4	MBG01	Button	MBG65083102	COMPLEX LGD160.AITABK BK:Black -	
4	MJN01	Tape,Window	MJN68907301	COMPLEX LGD160.ACZEWH ZZ:Without Color -	
4	MJN061101	Tape,USP Film	MJN68949701	COMPLEX LGD160.AVDPBK ZZ:Without Color -	
4	MEZ000000	Label	MLAZ0038301	COMPLEX LG-VX6000 ZZ:Without Color PID Label 4 Array PRINTING,	
3	ABA00	Bracket Assembly	ABA74749001	LGD160.AITABK ZZ:Without Color -	
4	MCQ000002	Damper	MCQ67569101	COMPLEX LGD160.AITABK ZZ:Without Color -	
4	MCQ000001	Damper	MCQ67569001	COMPLEX LGD160.AITABK ZZ:Without Color -	
4	MAZ000000	Bracket	MAZ64009001	MOLD PC LGD160.AITABK BK:Black -	
4	MCQ000000	Damper	MCQ67568901	COMPLEX LGD160.AITABK ZZ:Without Color -	
4	MJN009400	Tape,Camera	MJN68700601	COMPLEX LGL34C.ATRFBK ZZ:Without Color -	

Level	Location No.	Description	Part Number	Spec	Remark
5	MEZ000000	Label	MEZ65049701	COMPLEX LGLS720.ASPRTS ZZ:Without Color PID label	
5	MDJ000000	Filter	MDJ63825701	COMPLEX LGL34C.ATRFBK SV:SILVER SILVER -	
5	MCQ000000	Damper	MCQ67568801	COMPLEX LGD160.AITABK ZZ:Without Color -	
5	ABM00	Can Assembly,Shield	ABM74236501	LGD160.AITABK ZZ:Without Color -	
6	MEV000001	Insulator	MEV64595101	COMPLEX LGD175F.ABRAWH ZZ:Without Color -	
6	MEV000000	Insulator	MEV64613201	COMPLEX LGD175F.ABRAWH ZZ:Without Color INSULATOR_CAN,SHIELD,1	
6	MBK070300	Can,Shield	MBK63753101	PRESS SUS 0.3 LGD160.AITABK ZZ:Without Color -	
6	MDS000000	Gasket	MDS64492401	PRESS SUS 0.08 LGD175F.ABRAWH WH:WHITE WHITE Shield can gasket	
3	FAB00	Screw,Machine	GMEY0014301	GMEY0014301 BH + 1.4mM 3.5mM MSWR NI PLT N - KUMGANG SCREW CO., LTD	
1	AAD000000	Addition Assembly	AAD86811801	LGD160.ABALBK BK:BLACK BLACK -	
2	MCK00	Cover,Battery	MCK67937402	MOLD PC LGD160.AITABK BK:BLACK BLACK -	
1	AGF000000	Package Assembly	AGF77277909	LGD160.ABALBK ZZ:Without Color LGD160 BAL (S3/L40/STD UB/CIS BODY/720ea)	
2	MEZ047200	Label,Master Box	MLAJ0004402	PRINTING CG300 CGR DG ZZ:Without Color LABEL MASTER BOX(for CGR TDR 2VER. mbox_label) GSM standard_master box label	
2	AGJ000000	Pallet Assembly	APLY0003911	GT540.ACISBK ZZ:Without Color EU1 TYPE_CIS_CIS Body(SW)+Cap(EU)+AL_720ea	
3	MAY010800	Box,Carton	MBEC0003604	COMPLEX GX300.ACISWR ZZ:Without Color EU1 CIS Body(720ea/H:605mm)	
3	MCCL00	Cap,Box	MCCL0002501	COMPLEX GD510 CZESV ZZ:Without Color -	
3	MPCY00	Pallet	MPCY0012403	COMPLEX KG800 FRABK DB:DARK BLUE -	

Level	Location No.	Description	Part Number	Spec	Remark
2	MEZ000000	Label	MLAZ0050901	COMPLEX KU990.AGBRBK ZZ:Without Color Battery Warning Label (Lithium ion Battery Label)	
2	MAY084000	Box,Unit	MAY66241601	BOX TW 121 57 91 MULTI COLOR LGD160.ANLDKT ZZ:Without Color LGD160 STD(S7-3H_English/1200ea)	
2	MAY047100	Box,Master	MBEE0061001	COMPLEX GD510.ACZESV ZZ:Without Color EU1 Master Box	
2	MEZ003500	Label,Barcode	MLAC0003018	PRINTING HB620T O2DBK ZZ:Without Color GSM Peel standard_unit box label_90×40	

12.2 Replacement Parts <Main component>

Note: This Chapterisused for reference, Part order is ordered by SBOM standard on GCSC

Level	Location No.	Description	Part Number	Spec	Remark
5	EAA030101	PIFA Antenna,GPS	EAA63147001	LS01-I-13101-A0 SINGLE -5DB 3.0 SUS - GPS Carrier LS Mtron Ltd.	
5	EAA030100	PIFA Antenna,WiFi	EAA63147101	LS01-I-13102-A0 DUAL -5DB 3.0 SUS - BT Carrier LS Mtron Ltd.	
5	EAA030102	PIFA Antenna,RF	EAA63224501	KI-M011082 SINGLE -8DB 3.0 SUS - FM Carrier KOMATECH CO.,LTD	
4	EAU00	Motor,DC	EAU62128001	DM-YK408 3V 90mA 0A 11KRPM 0RPM 0SEC 0GF.CM 29OHM DONGYANG CHENGJI CO.	
4	EAA00	PIFA Antenna,Multiple	EAA63147301	KI-M081080 MULTI -5DB 3.0 SIMA - Main Carrier KOMATECH CO.,LTD	
4	EBD00	Touch Window Assembly	EBD61765303	LT350YF1CK CAPACITIVE TOUCH P/F/F Synaptics 2200 COB 3.5 Inch BTOB COBType D160 BK Color TOVIS	
4	EAJ00	LCD,Module-TFT	EAJ62607901	LM350TN1A HVGA 3.5INCH 320X480 300CD COLOR 70% 3/2 500:1 60Hz Inverter N LED 2D - TOVIS	
3	EBP00	Camera Module	EBP61742201	CW3034-A99CC CW3034-A99CC 3M FF Hynix 1/5" FPC 0deg. 3.5mm MIPI COWELL ELECTRONICS CO.,LTD	
4	EAB00	Speaker,Dual Mode	EAB62970201	GS191030C-01 Nd-Fe-B 700mW 8OHM 90DB 850HZ 1810 3t spring contact, front side SPRING GoerTek Inc.	
3	EBR00	PCB Assembly,Main	EBR78888601	LGD160.ABALBK 1.0 Main	
4	EBR071800	PCB Assembly Main,SMT	EBR78888801	LGD160.ABALBK 1.0 Main	
5	EBR071700	PCB Assembly Main,SMT Top	EBR78243501	LGD160.AITABK 1.0 Main	
6	ZD6601 ZD6603	Capacitor Ceramic,Chip	ECZH0001121	C1005X7R1H471KT000F 470pF 10% 50V X7R -55TO+125C 1005 R/TP - TDK KOREA COOPERATION	
6	EAX010000	PCB,Main	EAX65565301	LGD175F.ABRAWH C FR-4 Staggered via 6 Layer 0.8T Main	

Level	Location No.	Description	Part Number	Spec	Remark
6	SW9720	Switch,Tact	ESCY0008702	SKRWANE030 1C1P 12VDC 0.05A VERTICAL 127GF R/TP - ALPS ELECTRIC CO.,LTD.	
6	U8400	IC,Proximity	EAN62006801	APDS-9190 Digital Proximity Sensor 3.94X2.36X1.3 COB R/TP 8P Digital Proximity Sensor AVAGO TECHNOLOGIES INTERNATIONAL SALES PTE. LIMITED	
6	C8400 C8401	Capacitor Ceramic,Chip	ECCH0004904	GRM155R60J105K 1uF 10% 6.3V X5R -55TO+85C 1005 R/TP - MURATA MANUFACTURING CO.,LTD.	
6	C4157	Capacitor Ceramic,Chip	ECCH0009603	CE JMK212 BJ476MG-T 47uF 20% 6.3V X5R -55TO+85C 2012 R/TP 1.25mm - TAIYO YUDEN CO.,LTD	
6	R8400	Resistor,Chip	ERHY0000254	MCR01MZP5J472 4.7KOHM 5% 1/16W 1005 R/TP - ROHM.	
6	R8401	Resistor,Chip	ERHZ0000441	MCR01MZP5J220 22OHM 5% 1/16W 1005 R/TP - ROHM.	
6	R6622 R6623 R6920	Wire Pad,Short	SAFP0000401	AX3100 ATL SV_SHIPBACK,MAIN,A	
5	EBR071600	PCB Assembly Main,SMT Bottom	EBR78282401	LGD160.AITABK 1.0 Main	
6	C6611	Capacitor Ceramic,Chip	ECZH0000841	C1005C0G1H560JT000F 56pF 5% 50V NP0 -55TO+125C 1005 R/TP - TDK KOREA COOPERATION	
6	C1113 C2359 C5102	Capacitor Ceramic,Chip	EAE62506501	CL05A475MP5NRNC 4.7uF 20% 10V X5R -55TO+85C 1005 R/TP - - SAMSUNG ELECTRO-MECHANICS CO., LTD.	
6	C1618 L1108 L1109	Capacitor Ceramic,Chip	EAE62683501	C1005NPO508BGTQ 0.5pF 0.1PF 50V C0G -55TO+125C 1005 R/TP 0.55T max. DARFON ELECTRONICS CORP.	
6	C2101 C2102 C2310 C2361	Capacitor Ceramic,Chip	EAE62726601	CL03A225MQ3CRNC 2.2uF -20TO20% 6.3V X5R -55TO+85C 0603 R/TP 0.3T - SAMSUNG ELECTRO-MECHANICS CO., LTD.	

Level	Location No.	Description	Part Number	Spec	Remark
6	C2353 C4120 C4123 C4124 C4125 C4134 C4135 C4136 C4138 C4139 C4140 C4141 C4142 C4145	Capacitor Ceramic,Chip	EAE62962301	GRM155R61A225KE95 2.2uF -10TO+10% 10V X5R -55TO+85C 1005 R/TP 0.5 L:1.0+-0.05 W:0.5+-0.05 T:0.5+-0.05 MURATA MANUFACTURING CO.,LTD.	
6	C1105	Capacitor(High Frequency),Ceramic,Chip	EAE62882701	GRM1555C1H1R2C_H 1.2pF 0.25PF 50V C0G -55TO+125C 1005 R/TP 0.5+/-0.05 L:1.0+-0.05 W:0.5+-0.05 T:0.5+-0.05 MURATA MANUFACTURING CO.,LTD.	
6	C1621	Capacitor(High Frequency),Ceramic,Chip	EAE62883901	GRM1555C1H8R2C_H 8.2pF 0.25PF 50V C0G -55TO+125C 1005 R/TP 0.5+/-0.05 L:1.0+-0.05 W:0.5+-0.05 T:0.5+-0.05 MURATA MANUFACTURING CO.,LTD.	
6	C1625	Capacitor(High Frequency),Ceramic,Chip	EAE62945601	GRM1555C1H3R3C_H 3.3pF 0.25PF 50V C0G -55TO+125C 1005 R/TP 0.5+/-0.05 L:1.0+-0.05 W:0.5+-0.05 T:0.5+-0.05 MURATA MANUFACTURING CO.,LTD.	
6	CN9600	Socket,Card	EAG62830201	104031-0811 SD 8P ANGLE SMD R/TP 11.95x11.40x1.42t, Push-pull type MOLEX	
6	FB6611 FB6612	Filter,Bead	EAM62630901	BLM15AX102SN1D_ 1000 1.0x0.5x0.5 25% 0.49 0.35 SMD R/TP 0P - MURATA MANUFACTURING CO.,LTD.	
6	FL1101	Filter,Saw	EAM62732801	B8808 881.5MHz 1.1x0.9x0.45t SMD R/TP 5P EPCOS PTE LTD.	
6	U7301	IC,LDO Voltage Regulator	EAN62512901	TLV70730PDQNR V2 to V5.5 V3.0 0W QFN R/TP 4P EUSY0373901 RP103K301D-TR. RICHO PIN TO PIN TEXAS INSTRUMENTS KOREA LTD, HONGKONG BRANCH.	
6	U5400	IC,LDO Voltage Regulator	EAN62669801	TLV70728PDQNR V2 to V5.5 V2.8 0W QFN R/TP 4P - TEXAS INSTRUMENTS KOREA LTD, HONGKONG BRANCH.	
6	L5101	Inductor Multilayer,Chip	EAP61866701	LG HK0603 82NJ-T 82NH 5% - 70mA - - 3.37OHM 1GHZ 4 SHIELD 0 0.6X0.3X0.3MM R/TP TAIYO YUDEN CO.,LTD	

Level	Location No.	Description	Part Number	Spec	Remark
6	R2101	Resistor,Chip	EBC61856201	RC0201FR-07240RL 240OHM 1% 1/20W 0603 R/TP - YAGEO CORPORATION	
6	R2108	Resistor,Chip	EBC62581901	RC0201FR-0733RL 33OHM 1% 1/20W 0603 R/TP - YAGEO CORPORATION	
6	C5119	Capacitor Ceramic,Chip	ECCH0000113	MCH155A180J 18pF 5% 50V NP0 -55TO+125C 1005 R/TP - ROHM Semiconductor KOREA CORPORATION	
6	L6700 L6701	Filter,Bead	SFBH0008105	BLM15BD182SN1D 1800 ohm 1.0X0.5X0.5 25% 1.4 ohm 0.1A SMD R/TP 2P 0 MURATA MANUFACTURING CO.,LTD.	
6	ZD9710 ZD9711 ZD9712 ZD9720	Varistor	SEVY0005402	ICVS0505500FR 5.6V 0% 50F 1.0*0.5*0.55 - SMD R/TP INNOCHIPS TECHNOLOGY	
6	C2112 C2300 C2301 C2302 C2306 C2307 C2308 C2309 C2325 C2327 C2330 C2331 C2355 C2356 C2357 C2358 C2360 C2362 C2385	Capacitor Ceramic,Chip	ECCH0009101	C0603X5R0J104KT00NN 0.1uF 10% 6.3V X5R - 55TO+85C 0603 R/TP - TDK CORPORATION	
6	C2110	Capacitor Ceramic,Chip	ECCH0009104	C0603C0G1H330JT00NN 33pF 5% 50V C0G - 55TO+125C 0603 R/TP - TDK CORPORATION	
6	C5104	Capacitor Ceramic,Chip	ECCH0009105	C0603C0G1H820JT00NN 82pF 5% 50V NP0 - 55TO+125C 0603 R/TP - - TDK CORPORATION	
6	C5110	Capacitor Ceramic,Chip	ECCH0009504	MCH032A180JK 18pF 5% 25V NP0 -55TO+125C 0603 R/TP - ROHM.	

Level	Location No.	Description	Part Number	Spec	Remark
6	C2100 C2107 C2319 C2320 C2341 C2342 C2344 C2345 C2367	Capacitor Ceramic,Chip	ECCH0017301	CL03A105MQ3CSNH 0.000001F 20% 6.3V X5R -45TO+85C 0603 R/TP - SAMSUNG ELECTRO-MECHANICS CO., LTD.	
6	ZD6601 ZD6603	Capacitor Ceramic,Chip	ECZH0001121	C1005X7R1H471KT000F 470pF 10% 50V X7R -55TO+125C 1005 R/TP - TDK KOREA COOPERATION	
6	C3309 C3312 C3313 C3314 C3315 C3316 C3317 C3318 C3319 C3322 C3324 C3325 C3326 C4113	Capacitor Ceramic,Chip	ECZH0001210	C1005Y5V1A474ZT000F 470nF -20TO+80% 10V Y5V -30TO+85C 1005 R/TP - TDK KOREA COOPERATION	
6	C1129 L1105 L1123	Inductor Multilayer,Chip	ELCH0001034	HK1005 3N3S-T 3.3NH 0.3NH - 300mA 0.16OHM 6GHZ 8 SHIELD NONE 1.0X0.5X0.5MM R/TP TAIYO YUDEN CO.,LTD	
6	C5100 C5101 C5409	Capacitor Ceramic,Chip	ECZH0001217	GRM155R60J474K 470nF 10% 6.3V X5R -25TO+70C 1005 BK-DUP - MURATA MANUFACTURING CO.,LTD.	
6	L1114	Inductor Multilayer,Chip	ELCH0001054	1005GC2T5N6SLF 5.6NH 0.3NH - 300mA 0.27OHM 3.2GHZ 8 SHIELD NONE 1.0X0.5X0.5MM R/TP PILKOR ELECTRONICS LTD.	
6	C1104 C1624 L1600 L5103	Inductor Multilayer,Chip	ELCH0001056	1005GC2T2N7SLF 2.7NH 0.3NH - 300mA 0.17OHM 5.5GHZ 8 SHIELD NONE 1.0X0.5X0.5MM R/TP PILKOR ELECTRONICS LTD.	
6	L5402	Inductor Multilayer,Chip	ELCH0001425	LL1005-FHL82NJ 82NH 5% - 150mA 1.9OHM 1.15GHZ 10 SHIELD NONE 1.0X0.5X0.5MM R/TP TOKO, INC.	

Level	Location No.	Description	Part Number	Spec	Remark
6	L1604	Inductor Multilayer,Chip	ELCH0004701	1005GC2T12NJLF 12NH 5% - 250mA 0.48OHM 2.1GHZ 8 SHIELD NONE 1.0X0.5X0.5MM R/TP PILKOR ELECTRONICS LTD.	
6	C1606 L1602	Inductor Multilayer,Chip	ELCH0004704	1005GC2T4N7SLF 4.7NH 0.3NH - 300mA 0.23OHM 3.5GHZ 8 SHIELD NONE 1.0X0.5X0.5MM R/TP PILKOR ELECTRONICS LTD.	
6	L1605	Inductor Multilayer,Chip	ELCH0004705	1005GC2T8N2JLF 8.2NH 5% - 250mA 0.37OHM 2.8GHZ 8 SHIELD NONE 1.0X0.5X0.5MM R/TP PILKOR ELECTRONICS LTD.	
6	R8400	Resistor,Chip	ERHY0000254	MCR01MZP5J472 4.7KOHM 5% 1/16W 1005 R/TP - ROHM.	
6	C1111 C1131	Inductor Multilayer,Chip	ELCH0004713	1005GC2T6N8JLF 6.8NH 5% - 250mA 0.32OHM 3GHZ 8 SHIELD NONE 1.0X0.5X0.5MM R/TP PILKOR ELECTRONICS LTD.	
6	C1101 C1103 C1607 C1609 C1619 L1106	Inductor Multilayer,Chip	ELCH0004721	1005GC2T2N2SLF 2.2NH 0.3NH - 300mA - - 0.16OHM 6GHZ 8 SHIELD NONE 1.0X0.5X0.5MM R/TP PILKOR ELECTRONICS LTD.	
6	R2202 R2203	Resistor,Chip	ERHY0009516	MCR006YZPJ222 2.2KOHM 5% 1/20W 0603 R/TP - ROHM.	
6	R2111	Resistor,Chip	ERHY0009554	MCR006YZPF2002 20KOHM 1% 1/20W 0603 R/TP - ROHM.	
6	R3309	Resistor,Chip	ERHZ0000250	MCR01MZP5F2400 240OHM 1% 1/16W 1005 R/TP - ROHM.	
6	R4101 R4402	Resistor,Chip	ERHZ0000406	MCR01MZP5J104 100KOHM 5% 1/16W 1005 R/TP - ROHM.	
6	R5404	Resistor,Chip	ERHZ0000411	MCR01MZP5J121 120OHM 5% 1/16W 1005 R/TP - ROHM.	
6	R2204 R2205 R2206 R2207 R2208 R2209	Resistor,Chip	ERHZ0000443	MCR01MZP5J222 2.2KOHM 5% 1/16W 1005 R/TP - ROHM.	

Level	Location No.	Description	Part Number	Spec	Remark
6	R2106	Resistor,Chip	ERHZ0000463	MCR01MZP5J330 33OHM 5% 1/16W 1005 R/TP - ROHM.	
6	ZD4400	Diode,Schottky	EAH61992701	PMEG6002EB 600mV 60V 200mA 0SEC 20pF 0W SOD523 R/TP 2P 1 NXP Semiconductors	
6	J9500	Socket DIMM/SIMM	EAG63393401	C-203-0100 6P STRAIGHT STANDARD SMD T/REEL - SHENZHEN EVERWIN PRECISION TECHNOLOGY CO.,LTD.	
6	D9910	Diode,Switching	EAH61532901	BA891_ 1V 35V - - 0SEC 715mW SOD523 R/TP 2P 1 NXP Semiconductors	
6	D9200	Diode,TVS	EAH61872601	PESD12VS1UA 12V 13.3V min. 19V 22.5A 360mW SOD323 R/TP 2P 1 NXP Semiconductors	
6	FL9202	Filter,Ceramic	EAM62250401	LFB212G45CG7D227 BPF 2.45KHZ 100Hz SMD R/TP 3P MURATA MANUFACTURING CO.,LTD.	
6	FL9201	Filter,EMI/Power	EAM62272401	ICMEF112P500MFR COMMON MODE NOISE FILTER 0HZ 0.0000000000001F 0H SMD R/TP - INNOCHIPS TECHNOLOGY	
6	FB5100	Filter,Bead	EAM62471001	BLM03AX241SN1D 240 ohm 0.6X0.3X0.33 25% 0.38 ohm 0.35A SMD R/TP 2P 0 MURATA MANUFACTURING CO.,LTD.	
6	L5104	Inductor Multilayer,Chip	ELCH0001040	HK1005 3N9S-T 3.9NH 0.3NH - 300mA 0.21OHM 4GHZ 8 SHIELD NONE 1.0X0.5X0.5MM R/TP TAIYO YUDEN CO.,LTD	
6	C5118	Inductor Multilayer,Chip	ELCH0003816	LQG15HS3N6S02D 3.6NH 0.3NH - 300mA 0.18OHM 6GHZ 8 SHIELD NONE 1.0X0.5X0.5MM R/TP MURATA MANUFACTURING CO.,LTD.	
6	L2,L3	Inductor Multilayer,Chip	ELCH0004706	1005GC2T10NJLF 10NH 5% - 250mA 0.42OHM 2.5GHZ 8 SHIELD NONE 1.0X0.5X0.5MM R/TP PILKOR ELECTRONICS LTD.	
6	VA9500	Varistor	SEVY0003601	ICVL0505101V150FR 5.6V 0% 100pF 1.0*0.5*0.55 NONE SMD R/TP INNOCHIPS TECHNOLOGY	
6	U4300	IC,Over Voltage Protection	EUSY0407301	RT9718L WDFN8,8,R/TP,Programmable OVP,IC,ChargerIC,Charger - - WDFN R/TP 8P - RICHTEK TECHNOLOGY CORP.	

Level	Location No.	Description	Part Number	Spec	Remark
6	PT1600	Thermistor,NTC	SETY0007301	NCP15WF104F03RC NTC,100000 ohm,SMD,4250K+/-1%,100K,1%,0.1mA,4250K+/-1%,SMD,R/TP MURATA MANUFACTURING CO.,LTD.	
6	D9201 D9601 ZD9100	Varistor	SEVY0004401	ICVL0518400V500FR 18V 0% 40pF 1.0*0.5*0.55 NONE SMD R/TP INNOCHIPS TECHNOLOGY	
6	FL9200	Filter,EMI/Power	SFEY0015301	NFM18PC104R1C3 ESD/EMI 0HZ 0.1uF 0H SMD R/TP - MURATA MANUFACTURING CO.,LTD.	
6	U1100	Module,Tx Module	EAT62073401	SKY77573-31 0DBM 0DB 0% 0A 0A 0DB 0DBM 0DBM 42P 6.0x6.0x0.9MM WEDGE TxM for WTR2605, SP10T SKYWORKS SOLUTIONS INC.	
6	X4100	Crystal	EAW62063901	1RAA19200AAQ 19.2MHZ 10PPM 7pF 2520 SMD R/TP DAISHINKU CORPORATION.	
6	SW8000 SW8001 SW8002	Switch,Tact	EBF61974801	LS12T2-T 1C1P 12VDC 0.02A HORIZONTAL 160GF R/TP - CITIZEN ELECTRONICS CO.,LTD.	
6	Q5401	TR,Bipolar	EBK61573301	2SC5086 NPN 3V 20V 12V 80mA 1UA 80~160 100mW 2-2H1B R/TP 3P TOSHIBA ELECTRONICS KOREA CORPORATION	
6	C9500 C9503	Capacitor Ceramic,Chip	ECCH0000110	MCH155A100D 10pF 0.5PF 50V NP0 -55TO+125C 1005 R/TP - ROHM Semiconductor KOREA CORPORATION	
6	C1110 C1112 C1123 C1124 C9201	Capacitor Ceramic,Chip	ECCH0000115	MCH155A220JK 22pF 5% 50V NP0 -55TO+125C 1005 R/TP - ROHM Semiconductor KOREA CORPORATION	
6	C5117	Capacitor Ceramic,Chip	ECCH0000117	CL05C270JB5NNNC 27pF 5% 50V NP0 -55TO+125C 1005 R/TP 0.5 SAMSUNG ELECTRO-MECHANICS CO., LTD.	
6	C1600 C1605 C4102 C5403 C5404 C6610	Capacitor Ceramic,Chip	ECCH0000143	MCH155CN102KK 1nF 10% 50V X7R -55TO+125C 1005 R/TP - ROHM Semiconductor KOREA CORPORATION	

Level	Location No.	Description	Part Number	Spec	Remark
6	C3310 C3311 C5107 C5108 C5109 C5111	Capacitor Ceramic,Chip	ECCH0000155	MCH153CN103KK 10nF 10% 16V X7R - 55TO+125C 1005 R/TP - ROHM Semiconductor KOREA CORPORATION	
6	C9104 C9202	Capacitor Ceramic,Chip	ECCH0000161	MCH153CN333KK 33nF 10% 16V X7R - 55TO+125C 1005 R/TP - - ROHM Semiconductor KOREA CORPORATION	
6	C5105	Capacitor Ceramic,Chip	ECCH0000179	GRM155R71C223K 22nF 10% 16V X7R - 55TO+85C 1005 R/TP - MURATA MANUFACTURING CO.,LTD.	
6	L5400	Inductor Multilayer,Chip	ELCH0005004	HK1005 22NJ 22NH 5% - 300mA 0.6OHM 1.9GHZ 8 SHIELD NONE 1.0X0.5X0.5MM R/TP TAIYO YUDEN CO.,LTD	
6	L1110	Inductor Multilayer,Chip	ELCH0004715	1005GC2T27NJLF 27NH 5% - 200mA - - 0.9OHM 1.4GHZ 8 SHIELD NONE 1.0X0.5X0.5MM R/TP PILKOR ELECTRONICS LTD.	
6	L6610	Inductor Multilayer,Chip	ELCH0010302	0603LS-101XJEC 100NH 5% - 1.4A 0.13OHM 1.15GHZ 12 NON SHIELD NONE 1.80X1.12X1.12MM R/TP COILCRAFT SINGAPORE PTE LTD.	
6	L1501	Inductor Multilayer,Chip	ELCH0012502	LQW15AN10NG00D 10NH 2% - 500mA 0.17OHM 5.5GHZ 25 NON SHIELD NONE 1.0X0.5X0.5MM R/TP MURATA MANUFACTURING CO.,LTD.	
6	CN7100 CN7300	Connector,BtoB	ENBY0034201	GB042-24S-H10-E3000 24P 0.40MM STRAIGHT SOCKET SMD R/TP 1M - LS Mtron Ltd.	
6	CN7200	Connector,BtoB	ENBY0040301	GB042-34S-H10-E3000 34P 0.4MM STRAIGHT SOCKET SMD R/TP 1M - LS Mtron Ltd.	
6	SW1100	Connector,RF	ENWY0008701	MS-156C NONE STRAIGHT SOCKET SMD T/REEL AU 50OHM 400mDB HIROSE KOREA CO.,LTD	
6	R5403	Resistor,Chip	ERHY0000129	MCR01MZP5F1802 18KOHM 1% 1/16W 1005 R/TP - ROHM.	
6	R9102	Resistor,Chip	ERHY0000140	MCR01MZP5F3602 36KOHM 1% 1/16W 1005 R/TP - ROHM.	
6	R4100	Resistor,Chip	ERHY0000161	MCR01MZP5F2003 200KOHM 1% 1/16W 1005 R/TP - ROHM.	

Level	Location No.	Description	Part Number	Spec	Remark
6	R1501 R1502 R9710 R9711 R9712 R9720 R9721	Resistor,Chip	ERHY0003301	MCR01MZP5J101 100OHM 5% 1/16W 1005 R/TP - ROHM.	
6	R1602 R4107 R9606	Resistor,Chip	ERHZ0000204	MCR01MZP5F1003 100KOHM 1% 1/16W 1005 R/TP - ROHM.	
6	R6613	Resistor,Chip	ERHZ0000211	MCR01MZP5F1201 1.2KOHM 1% 1/16W 1005 R/TP - ROHM.	
6	R9101	Resistor,Chip	ERHZ0000222	MCR01MZP5F1503 150KOHM 1% 1/16W 1005 R/TP - ROHM.	
6	R2100	Resistor,Chip	ERHZ0000235	MCR01MZP5F2000 200OHM 1% 1/16W 1005 R/TP - ROHM.	
6	MIC6921	Microphone Condenser	EAB62830801	S08OB383-002 -38DB 150OHM OMNI 1.5 TO 3.6V 3.76 * 2.95 * 1.1T SMD GoerTek Inc.	
6	C1116 C1603	Capacitor Ceramic,Chip	EAE62502901	CL05A106MP5NUNC 10uF 20% 10V X5R - 55TO+85C 1005 R/TP 0.55T max. SAMSUNG ELECTRO-MECHANICS CO., LTD.	
6	C4401 C9200	Capacitor Ceramic,Chip	EAE62505701	CL10A105KB8NNNC 1uF 10% 50V X5R - 55TO+85C 1608 R/TP 0.9T max. - SAMSUNG ELECTRO-MECHANICS CO., LTD.	
6	C1117 C1601	Capacitor Ceramic,Chip	EAE62685701	GRM155R71H103KA88D 10nF 10% 50V X7R - 55TO+125C 1005 R/TP 0.55T max. - MURATA MANUFACTURING CO.,LTD.	
6	C1612	Capacitor(High Frequency),Ceramic,Chip	EAE62883601	GRM1555C1H6R8C_H 6.8pF 0.25PF 50V C0G - 55TO+125C 1005 R/TP 0.5+/-0.05 L:1.0+-0.05 W:0.5+-0.05 T:0.5+-0.05 MURATA MANUFACTURING CO.,LTD.	
6	C2363 C4126 C4127	Capacitor Ceramic,Chip	EAE62927201	ADK107BBJ476MA 47uF -20TO20% 4V X5R - 55TO+85C 1608 R/TP 0.8T +0.2 L:1.6+0.2 W:0.8+0.2 T:0.8+0.2 KOREA TAIYO YUDEN.CO., LTD.	
6	J6610	Jack,Phone	EAG63070601	KJA-PH-4-0176 5P 2P ANGLE R/TP 3.5M BLACK 5P - KSD CO., LTD	

Level	Location No.	Description	Part Number	Spec	Remark
6	CN9200	Connector,I/O	EAG63090001	04-5161-005-100-868 7P 0.90MM ANGLE RECEPTACLE DIP R/TP Normal New IO Connector KYOCERA ELCO KOREA SALES CO.,LTD.	
6	FL1600	Filter,Duplexer	EAM62711201	SAYRF1G95GC0F0A 2140 MHz 2112.4 to 2167.6 MHz 1950 MHz 1922.4 to 1977.6 MHz 1.7 typ / 2.1 max 1.2 typ / 1.7 max 2.0x1.6x0.6t DUAL SMD R/TP 9P MURATA MANUFACTURING CO.,LTD.	
6	FL7100	Filter,EMI/Power	EAM62630501	ICMEF104P101MFR COMMON MODE NOISE FILTER - 0.0000000000017F 0H SMD R/TP - INNOCHIPS TECHNOLOGY	
6	FL1103	Filter,Saw	EAM62633001	SFHG89DQ102 1575.42@GPS/1601.72@GLONASS 1.4x1.1x0.5t SMD R/TP 5P WISOL.CO.,LTD	
6	FL1601	Filter,Duplexer	EAM62711101	SAYFH897MGC0F0A 942.5 MHz 925 to 960 MHz 897.5 MHz 880 to 915 MHz 2.6 typ / 3.2 max 1.9 typ / 3.3 max 2.0x1.6x0.6t DUAL SMD R/TP 9P MURATA MANUFACTURING CO.,LTD.	
6	FL1100	Filter,Saw,Dual	EAM62792801	SFRG42DB002 1842.50MHz/1960.00MHz 1.5x1.1x0.60t SMD R/TP 10P WISOL.CO.,LTD	
6	U4400	IC,DC,DC Converter	EAN62186901	LM3530TMX-40 NOPB 2.7 to 5.5V adj 0W CSP R/TP 12P - NATIONAL SEMICONDUCOTR CORPORATION.	
6	U8100	IC,Acceleration Sensor	EAN62527101	BMA255 12 bit Digital Triaxial 2x2x0.95 LGA R/TP 12P - BOSCH SENSORTEC GMBH	
6	U1500	IC Assembly	EAN62686601	WTR2605 2G/3G, WCDMA, GSM, EDGE, CDMA and TDSCDMA Multi Mode QUALCOMM INCORPORATED.	
6	FL1102	IC,RF Amplifier	EAN62696801	SFMG1R0U201 1.5~3.1 2.7 0 0W 0W 0 0 MOLD R/TP 12P 3.3x.2.1x.1.0 WISOL.CO.,LTD	
6	U5100	IC,WiFi	EAN62698901	WCN-3620-0-61WLNSP WiFi(11bgn)+BT4.0+FM IC for QMC 28nm BB, 3.32*3.55*0.63, 0.4pitch WLCSP R/TP 61P QUALCOMM INCORPORATED.	
6	U4100	IC,PMIC	EAN62737301	PM8110 to 5.5V adj 0W CSP R/TP 118P SMBC, PWM, 19.2MHz XO QUALCOMM INCORPORATED.	

Level	Location No.	Description	Part Number	Spec	Remark
6	U2100	IC,Digital Baseband Processor,3G	EAN62797001	MSM8210 Dual 1.2GHz A7, 1x300 LPDDR2, HSPA(7.2/5.8),CDMA, TD-SCDMA,DOrA,DSDS, qHD display@ 60fps, Adreno 302, 12x12mm NSP R/TP 488P QUALCOMM INCORPORATED.	
6	U3300	IC,MCP,eMMC	EAN62825801	H9TP32A4GDCCPR-KGM NAND/4G SDRAM/4G(2G*2/ 32bit) 1.7VTO1.95V 11.5x13.0x1.0 TR 162P NAND+DDR SDRAM FBGA 4GB eMMC v4.5+4Gb LPDDR2 MCP (20nm 32Gb MLC+29nm 4Gb 533MHz LPDDR2) HYNIX SEMICONDUCTOR INC.	
6	U1600	IC,Power Amplifier	EAN62885901	SKY77742-21 3.2V to 4.35V 0 0 0W 0W 0 2 SMD R/TP 16P 3*4size, for WTR2605, single input dual output, Band1/2/5/8, with CPL, GPIO SKYWORKS SOLUTIONS INC.	
6	C9603	Capacitor Ceramic,Chip	ECCH0007804	CL05A225MP5NSNC 2.2uF 20% 10V X5R -55TO+85C 1005 R/TP 0.5MM - SAMSUNG ELECTRO-MECHANICS CO., LTD.	
6	C1501 C1507 C3300	Capacitor Ceramic,Chip	ECCH0017601	CL05A475MQ5NRNC 4.7uF 20% 6.3V X5R -55TO+85C 1005 R/TP 0.5MM - SAMSUNG ELECTRO-MECHANICS CO., LTD.	
6	C4111 C4112	Capacitor Ceramic,Chip	ECCH0042302	CL21A475KACLRNC 4.7uF -10TO+10% 25V X5R -55TO+85C 2012 R/TP 0.85+-0.1 - SAMSUNG ELECTRO-MECHANICS CO., LTD.	
6	C1513	Capacitor Ceramic,Chip	ECZH0000816	C1005C0G1H120JT000F 12pF 5% 50V NP0 -55TO+125C 1005 R/TP - TDK KOREA COOPERATION	
6	C2329 C2364 C2365	Capacitor Ceramic,Chip	ECZH0001106	C1005X7R1E472KT000F 4.7nF 10% 25V X7R -55TO+125C 1005 R/TP - TDK KOREA COOPERATION	
6	ZD9101	Diode,Zener	EDNY0013602	EDZVT2R5.1B 4.98V 4.98TO5.2V 80OHM 150mW EMD2 R/TP 2P 1 ROHM Semiconductor KOREA CORPORATION	
6	ZD6604	Diode,TVS	EDTY0012501	UCLAMP3311T.TCT 3.3V 3.5V min. 6.5V 5A -SLP1006P2T R/TP 2P 1 SEMTECH CORPORATION	
6	R1603	Resistor,Chip	ERHZ0000245	MCR01MZP5F2203 220KOHM 1% 1/16W 1005 R/TP - ROHM.	
6	R2107	Resistor,Chip	ERHZ0000278	MCR01MZP5F3901 3.9KOHM 1% 1/16W 1005 R/TP - ROHM.	

Level	Location No.	Description	Part Number	Spec	Remark
6	R6617	Resistor,Chip	ERHZ0000404	MCR01MZP5J102 1KOHM 5% 1/16W 1005 R/TP - ROHM.	
6	R9500	Resistor,Chip	ERHZ0000422	MCR01MZP5J153 15KOHM 5% 1/16W 1005 R/TP - ROHM.	
6	R9200	Resistor,Chip	ERHZ0000486	MCR01MZP5J473 47KOHM 5% 1/16W 1005 R/TP - ROHM.	
6	R1600	Resistor,Chip	ERHZ0000490	MCR01MZP5J510 51OHM 5% 1/16W 1005 R/TP - ROHM.	
6	R500	Resistor,Chip	ERHZ0000500	MCR01MZP5J620 62OHM 5% 1/16W 1005 R/TP - ROHM.	
6	R5401	Resistor,Chip	ERHZ0003801	MCR01MZP5J5R1 5.1OHM 5% 1/16W 1005 R/TP - ROHM.	
6	U7300	IC,LDO Voltage Regulator	EUSY0374201	RP103K121D-TR RP103K121D-TR RP103K121D-TR,PLP1010 ,4 ,R/TP ,1.2V 150mA Single LDO High PSRR ver RICOH COMPANY, LTD. RICOH COMPANY, LTD.	
6	L1104	Capacitor(High Frequency),Ceramic,Chip	EAE62882601	GRM1555C1H1R0C_H 1pF 0.25PF 50V C0G - 55TO+125C 1005 R/TP 0.5+/-0.05 L:1.0+-0.05 W:0.5+-0.05 T:0.5+-0.05 MURATA MANUFACTURING CO.,LTD.	
6	C5126	Inductor Multilayer,Chip	EAP62246501	LG HK 0603 33NJ-T 33NH 5% - 110mA - - 1.47OHM 1.7GHZ 4 SHIELD - 0.6X0.3X0.3MM R/TP TAIYO YUDEN CO.,LTD	
6	C6700 C6701 D6700 D6701	Capacitor Ceramic,Chip	ECCH0000151	CL05B472KB5NNNC 4.7nF 10% 25V X7R - 55TO+125C 1005 R/TP - - SAMSUNG ELECTRO-MECHANICS CO., LTD.	
6	C9102	Capacitor Ceramic,Chip	ECCH0009103	C0603C0G1H101JT00NN 100pF 5% 50V C0G - 55TO+125C 0603 R/TP - - TDK CORPORATION	
6	C4110	Capacitor Ceramic,Chip	ECZH0004402	CL05F104ZO5NNNC 0.1uF -20TO+80% 16V Y5V - 30TO+85C 1005 R/TP - - SAMSUNG ELECTRO-MECHANICS CO., LTD.	
6	C7202	Capacitor Ceramic,Chip	ECZH0003103	GRM36X7R104K10PT 100nF 10% 10V X7R - 55TO+125C 1005 R/TP - MURATA MANUFACTURING CO.,LTD.	
6	C1109 C1622 L5	Inductor Multilayer,Chip	ELCH0001031	HK1005 15NJ-T 15NH 5% - 300mA 0.46OHM 2.3GHZ 8 SHIELD NONE 1.0X0.5X0.5MM R/TP TAIYO YUDEN CO.,LTD	

Level	Location No.	Description	Part Number	Spec	Remark
6	R2213 R2217 R2219	Resistor,Chip	ERHY0009506	MCR006YZPJ104 100KOHM 5% 1/20W 0603 R/TP - ROHM.	
6	R6700 R6701 R9503	Resistor,Chip	ERHZ0000402	MCR01MZP5J100 10OHM 5% 1/16W 1005 R/TP - ROHM.	
6	R3308 R4102 R7203 R7204	Resistor,Chip	ERHZ0000405	MCR01MZP5J103 10KOHM 5% 1/16W 1005 R/TP - ROHM.	
6	R7200 R7201	Resistor,Chip	ERHZ0000407	MCR01MZP5J105 1MOHM 5% 1/16W 1005 R/TP - ROHM.	
6	C9101	Capacitor Ceramic,Chip	EAE62286801	CL03A104KP3NNNC 0.0000001F 10% 10V X5R - 55TO+85C 0603 R/TP 0.3 - SAMSUNG ELECTRO-MECHANICS CO., LTD.	
6	C2318 C2349 C2350 C2351 C2368 C2369 C2426 C2427 C4300	Capacitor Ceramic,Chip	EAE62685301	CL05A105KA5NQNC 1uF 10% 25V X5R - 55TO+85C 1005 R/TP 0.6T max. Samsung(1.0+-0.1 0.5+-0.1 0.5+-0.1) Murata (1.0+-0.05 0.5+-0.05 0.5+-0.05) SAMSUNG ELECTRO-MECHANICS CO., LTD.	
6	C9100 C9105	Capacitor,TA,Conformal	EAE62748401	F981A476MSAFZH 47uF 20% 10V 9.4UA - 55TO+125C 5OHM 2.2X1.25X0.9MM NONE SMD R/TP 0.9T max. UNITEL ELECTRONICS CO. LTD.	
6	C5120	Capacitor(High Frequency),Ceramic,Chip	EAE62945301	GRM1555C1HR50B_H 0.5pF 0.1PF 50V C0G - 55TO+125C 1005 R/TP 0.5+/-0.05 L:1.0+-0.05 W:0.5+-0.05 T:0.5+-0.05 MURATA MANUFACTURING CO.,LTD.	
6	C5127 C5128	Capacitor(High Frequency),Ceramic,Chip	EAE62946501	GRM0335C1E3R9B_H 3.9pF 0.1PF 25V C0G - 55TO+125C 0603 R/TP 0.3+-0.03 L:0.6+-0.03 W:0.3+-0.03 T:0.3+-0.03 MURATA MANUFACTURING CO.,LTD.	
6	CN9100	Connector,Terminal Block	EAG63717401	HSBC-4P25-5401 4P 2.50MM STRAIGHT SMD T/REEL - HAN SHIN TERMINAL CO., LTD.	
6	U7200	IC,Capacitive Touch Sensor	EAN62971601	S2200 Touch IC with Knock On Function 5X5X0.55 QFN R/TP 40P - SYNAPTICS CO.	

Level	Location No.	Description	Part Number	Spec	Remark
6	VA7100 VA9503 VA9504 VA9600 VA9601 VA9602 VA9603 VA9604 VA9605 ZD6602	Varistor	SEVY0005101	ICVL0518050FR 18V 0% 5F 1.0*0.5*0.55 NONE SMD R/TP INNOCHIPS TECHNOLOGY	
6	C1100 C1102 C1107 C1115 C1119 C1120 C1121 C1122 C1125 C1126 C1128 C1130 C1137 C1500 C1508 C1611 C1613 C1615 C1616 C1617 C1623 C4402 C5112 C5114 C5115 C5125 L1102 L1115	Capacitor Ceramic,Chip	ECZH0000813	C1005C0G1H101JT 100pF 5% 50V C0G -55TO+125C 1005 R/TP - TDK KOREA COOPERATION	
6	C8400 C8401	Capacitor Ceramic,Chip	ECCH0004904	GRM155R60J105K 1uF 10% 6.3V X5R -55TO+85C 1005 R/TP - MURATA MANUFACTURING CO.,LTD.	
6	C1502,C1503, C1504,C1505, C1506,C1509, C1510,C1511,	Capacitor,Ceramic, Chip	ECCH0002001	C1005JB0J104KT000F 0.1uF 10% 6.3V X5R -30TO+85C 1005 R/TP - - TDK CORPORATION	

Level	Location No.	Description	Part Number	Spec	Remark
6	R6622 R6623 R6920	Wire Pad,Short	SAFP0000401	AX3100 ATL SV_SHIPBACK,MAIN,A	
6	C5410 C7304 C7305 C7309	Capacitor Ceramic,Chip	ECZH0001215	C1005X5R1A105KT000F 1uF 10% 10V X5R -55TO+85C 1005 R/TP - TDK KOREA COOPERATION	
6	C2312 C2313 C2315 C2347 C2348 C2401 C2402 C2403 C2424 C2425 C2450 C2451 C2456	Capacitor Ceramic,Chip	ECCH0034801	CL03A474MQ3NNNH 0.47uF -20TO20% 6.3V X5R -55TO+85C 0603 R/TP 0.3+-0.03 - SAMSUNG ELECTRO-MECHANICS CO., LTD.	
6	C4121 C4122	Capacitor Ceramic,Chip	EAE63004901	GRM219R61C226ME15 22uF -20TO20% 16V X5R -55TO+85C 2012 R/TP Max 1T L:2.0+-0.2 W:1.25+-0.2 T:0.85+-0.15 MURATA MANUFACTURING CO.,LTD.	
6	C3303 C7100 C7101 C7200	Capacitor Ceramic,Chip	ECCH0000198	CL05A225MQ5NSNC 2.2uF 20% 6.3V X5R -55TO+85C 1005 R/TP . SAMSUNG ELECTRO-MECHANICS CO., LTD.	
6	C2324 C2373 C2397 C2398 C2430 C2431 C2452 C2453 C2454 C2455 C9103	Capacitor Ceramic,Chip	EAE62762301	CL03A105MP3NSNC 1uF 20% 10V X5R -55TO+85C 0603 R/TP 0.33 MM - SAMSUNG ELECTRO-MECHANICS CO., LTD.	
6	L4110	Inductor,Wire Wound,Chip	EAP62526501	TFM201610GHM-1R0MTAA 1UH 20% - 3A 3.6 3 0.06OHM - - SHIELD 2.0X1.6X1.0 MM - R/TP TDK KOREA COOPERATION	
6	L4112	Inductor,Wire Wound,Chip	EAP62665901	VLS201610HBX-R47M 470NH 20% - 3.3A 3.4 3.3 0.043OHM - - SHIELD 2.0X1.6X1.0MM - R/TP TDK KOREA COOPERATION	

Level	Location No.	Description	Part Number	Spec	Remark
6	L4400	Inductor,Wire Wound,Chip	EAP62106301	1239AS-H-100N=P2 10UH 30% 30V 700mA 1 0.7 0.46OHM - - SHIELD 2.5X2.0X1.2MM NONE R/TP TOKO, INC.	
6	U6700	IC,Analog Switch	EAN62971901	DG2750DN 1.8~5.0V 1.14USEC 90NSEC 208mW QFN10 R/TP 10P - VISHAY INTERTECHNOLOGY ASIA PTE LTD	
6	C5113	Capacitor Ceramic,Chip	ECCH0005604	GRM188R60J106M 10000000 pF,6.3V,M,X5R,TC,1608,R/TP,0.8 mm MURATA MANUFACTURING CO.,LTD.	
6	R6619 R7300 R7303	Wire Pad,Open	SAFO0000401	AX3100 ATL SV_SHIPBACK,MAIN,A,0OHM DNI	
6	C1108 C6703 C6921 C9601 D6922	Capacitor Ceramic,Chip	ECZH0000830	C1005C0G1H330JT000F 33pF 5% 50V NP0 - 55TO+125C 1005 R/TP - TDK KOREA COOPERATION	
6	C4116	Capacitor Ceramic,Chip	EAE63143001	ZRB18AR61A226M 22uF -20TO20% 10V X5R - 55TO+85C 1608 R/TP L:1.6+-0.2, W:0.8+-0.2 T:1.0+-0.2 Max 1.2T, Murata Acoustic Noise MLCC ZRB MURATA MANUFACTURING CO.,LTD.	
6	C2108 C4117 C6702 C7301 C7302 C7303	Capacitor Ceramic,Chip	ECCH0000182	GRM155R61A104K 0.1uF 10% 10V X5R - 55TO+85C 1005 R/TP - MURATA MANUFACTURING CO.,LTD.	
6	L4113 L4114	Inductor,Wire Wound,Chip	ELCP0014201	1239AS-H-2R2N=P2 2.2UH 30% - 1.6A 2.2 1.6 0.108OHM - - SHIELD 2.5X2.0X1.2MM NONE R/TP TOKO, INC.	
6	CN1100 CN1101	C-Clip	EAG63670501	PMT1023 1P ANT TERMINAL STRAIGHT SMD T/REEL AU 3.0X1.5X1.3(LXWXH) SERVEONE CO., LTD.	
6	R8401	Resistor,Chip	ERHZ0000441	MCR01MZP5J220 22OHM 5% 1/16W 1005 R/TP - ROHM.	
6	C4118	Capacitor Ceramic,Chip	EAE63162401	GRM188R61E106M 10uF -20TO20% 25V X5R - 55TO+85C 1608 R/TP Max 1.0T L:1.6+-0.2 W:0.8+-0.2 T:0.8+-0.2 MURATA MANUFACTURING CO.,LTD.	

Level	Location No.	Description	Part Number	Spec	Remark
6	C5124 L1606	Capacitor Ceramic,Chip	ECZH0000802	C1005C0G1H010CT 1pF 0.25PF 50V NP0 - 55TO+125C 1005 R/TP - TDK KOREA COOPERATION	
6	L5100	Inductor Multilayer,Chip	EAP61767601	HK0603 68NJ-T 68NH 5% - 80mA - - 2.66OHM 1.1GHZ 4 SHIELD NONE 0.6X0.3X0.3MM R/TP TAIYO YUDEN CO.,LTD	
6	D5100 L1101 L5403 L5404 L9910 L9911	Inductor Multilayer,Chip	ELCH0001430	LL1005-FHLR10J 100NH 5% - 150mA 2.2OHM 1.03GHZ 10 SHIELD NONE 1.0X0.5X0.5MM R/TP TOKO, INC.	
6	FB6610 FB6920	Filter,Bead	SFBH0008102	BLM15HD182SN1D 1800 ohm 1.0X0.5X0.5 25% 2.2 ohm 0.2A SMD R/TP 2P 0 MURATA MANUFACTURING CO.,LTD.	
6	ZD5400 ZD6605	Diode,TVS	EAH62032801	RCLAMP0531T 5V 6V min. 20V 4A 80W SLP1006P2T R/TP 2P 1 SEMTECH INTERNATIONAL AG	
6	C4128	Capacitor Ceramic,Chip	ECCH0017501	CL10A226MQ8NRNE 22uF 20% 6.3V X5R - 55TO+85C 1608 R/TP 0.8MM - SAMSUNG ELECTRO-MECHANICS CO., LTD.	
6	L4111	Inductor,Wire Wound,Chip	EAP62266501	MAMK2520T1R0M 1UH 20% - 2.7A 3.1 2.7 0.059OHM - - SHIELD 2.5X2.0X1.2MM - R/TP TAIYO YUDEN CO.,LTD	
6	U8401	IC,LDO Voltage Regulator	EUSY0355701	RP103K281D-TR-F 1.7V TO 5.25V 2.8V 400mW DFN R/TP 4P - RICOH COMPANY, LTD.	
6	C2311 C4400	Capacitor Ceramic,Chip	ECCH0007803	CL10A106MP8NNNC 10uF 20% 10V X5R - 55TO+85C 1608 R/TP 0.8MM SAMSUNG ELECTRO-MECHANICS CO., LTD.	
5	SAD010000	Software,Mobile	SAD34374101	Android KK Base D16010a - EUROPE QCT LGD160.ABALBK	
4	EBR071500	PCB Assembly Main,Insert	EBR78243401	LGD160.AITABK 1.0 Main	
5	RAA050100	Resin,PC	BRAH0001301	UF2040 or 3075BHF . . NONE	
2	EAD010000	Cable,Assembly	EAD62377902	LG0108 USB USB 1.0M 4 BLACK UL N ningbo broad telecommunication co.,ltd	
1	SAF010100	Software Assembly Common	SAF30220401	LGD160GO.AVD2KT KK -	

Level	Location No.	Description	Part Number	Spec	Remark
2	SAD010100	Software Application	SAD34198401	Android KK 5.3.14.20140117_2 PCSuiteV - - EUROPE PC SYNC -	
2	SAD010600	Software,OSP	SAD34371301	Windows Android KK - -	
2	SAD010500	Software,USB Driver	SAD34371501	Windows -	

12.3 Accessory

Note: This Chapterisused for reference,Part order is ordered by SBOM standard onGCSC

Level	Location No.	Description	Part Number	Spec	Remark
2	EAY060000	Adapters	EAY62709906	MCS-02ED_EAC 90Vac~264Vac 4.75Vdc~5.25Vdv 850mA 50/60Hz CE WALL 2P USB - DONG DO ELECTRONICS CO., LTD	
2	MFL053800	Manual,Operation	MFL68240613	PRINTING LGD160.ABALBK ZZ:Without Color Latvia ESTONIAN+ LATVIAN+ LITHUANIAN -	
2	AFN053800	Manual Assembly Operation	AFN76372311	LGD160.ABALBK ZZ:Without Color -	
3	MBM062600	Card,Quick Reference	MBM64296212	PRINTING LGD160.ABALBK ZZ:Without Color -	
3	MBM087200	Card,Warranty	MCDF0011601	COMPLEX GD510 BALBK ZZ:Without Color -	
2	EAC00	Rechargeable Battery,Lithium Ion	EAC61738201	BL-44JR 3.7V 1.5AH 300mAH 61x44x4.4 65x44x4.8(Max) BLACK Top cap Screw Joint - LG Chem,LTD.	