Internal Use Only

LG

Service Manual

LG-D325

Date: March, 2014 / Issue 1.0

Table Of Contents

Copyright © 2014 LG Electronics. Inc. All right reserved.
Only for training and service purposes

1. INTRODUCTION

1.1 Purpose

This manual provides the information necessary to repair, calibration, description and download the features of this model.

1.2 Regulatory Information

A. Security

Toll fraud, the unauthorized use of telecommunications system by an unauthorized part (for example, persons other than your company's employees, agents, subcontractors, or person working on your company's behalf) can result in substantial additional charges for your telecommunications services. System users are responsible for the security of own system. There are may be risks of toll fraud associated with your telecommunications system. System users are responsible for programming and configuring the equipment to prevent unauthorized use. The manufacturer does not warrant that this product is immune from the above case but will prevent unauthorized use of common carrier telecommunication service of facilities accessed through or connected to it. The manufacturer will not be responsible for any charges that result from such unauthorized use.

B. Incidence of Harm

If a telephone company determines that the equipment provided to customer is faulty and possibly causing harm or interruption in service to the telephone network, it should disconnect telephone service until repair can be done. A telephone company may temporarily disconnect service as long as repair is not done.

C. Changes in Service

A local telephone company may make changes in its communications facilities or procedure. If these changes could reasonably be expected to affect the use of the phones or compatibility with the net work, the telephone company is required to give advanced written notice to the user, allowing the user to take appropriate steps to maintain telephone service.

D. Maintenance Limitation

Maintenance limitations on the phones must be performed only by the manufacturer or its authorized agent. The user may not make any changes and/or repairs expect as specifically noted in this manual. Therefore, note that unauthorized alternations or repair may affect the regulatory status of the system and may void any remaining warranty.

E. Notice of Radiated Emission

This model complies with rules regarding radiation and radio frequency emission as defined by local regulatory agencies. In accordance with these agencies, you may be required to provide information such as the following to the end user.

Copyright © 2014 LG Electronics. Inc. All right reserved.
Only for training and service purposes

F. Pictures

The pictures in this manual are for illustrative purposes only; your actual hardware may look slightly different.

G. Interference and Attenuation

A phone may interfere with sensitive laboratory equipment, medical equipment, etc. Interference from unsuppressed engines or electric motors may cause problems.

H. Electrostatic Sensitive Devices

ATTENTION

Boards, which contain Electrostatic Sensitive Device (ESD), are indicated by the sign. Following information is ESD handling:

- Service personnel should ground themselves by using a wrist strap when exchange system boards.
- When repairs are made to a system board, they should spread the floor with anti-static mat which is also grounded.
- Use a suitable, grounded soldering iron.
- Keep sensitive parts in these protective packages until these are used.
- When returning system boards or parts like EEPROM to the factory, use the protective package as described.

Copyright © 2014 LG Electronics. Inc. All right reserved.
Only for training and service purposes

1.3 Specification

KEY FEATURES

- Android 4.4-(KitKat)
- 4.5" Touch Screen WVGA (480 x 800)
- 8MP AF with flash
- 3G Mobile Hotspot

ENHANCED USER EXPERIENCE

- Android 4.4
- Proximity Sensor – locks the touch screen and buttons while talking on the phone
- Motion Sensor – Electronic compass , Accelerometer and Gyroscope
- USB Charging via Computer
- Airplane Mode (RF Off)

DESIGN

- Sleek and Stylish Design
- 4.5" WVGA LCD Screen
- Capacitive Touch Screen – Glass with fast and accurate response
- Micro USB/Charging Port

Copyright © 2014 LG Electronics. Inc. All right reserved.
Only for training and service purposes

CAMERA/VIDEO

- 5MP AF with flash and Camcorder
- Camera Resolutions: 2560 x 1920, 2048 x 1536, 2240 x 1344 1280 x 960 1280 X 768 Pixels
- Image Editor: zoom, rotate, crop images
- Brightness, ISO, White Balance,* Color Effects, Timer
- Cheese shutter – take photo with voice command.
- Video Resolutions: 640 x 480 320 x 240 176 x 144 Pixels

MULTIMEDIA

- Music Player for MP3, WMA, and Unprotected AAC
- Stereo Sound via Headset or *Bluetooth*
- Music Library – Organized by Artists, Albums, Songs, and Playlists
- Repeat and Shuffle Music Playback Modes

BLUETOOTH®

- Version: 4.0
- Supported Profiles: headset, hands-free, object push, advanced audio distribution (stereo), audio/video remote control, file transfer, phone book access, message access, serial port
- Listen to Music with Optional Stereo *Bluetooth* Headset**
- Send User-Generated Pictures (JPEG) and Videos via *Bluetooth* Wireless Technology

*Depends on available memory.

**Accessories sold separately.

Copyright © 2014 LG Electronics. Inc. All right reserved.
Only for training and service purposes

VOICE/AUDIO

- One-Touch Speakerphone*
- Speaker-Independent Voice Commands
- Voice-Activated Dialing
- Text to Speech
- MP3 Music Ringer Support

TOOLS & DATA

- Android Apps: Alarm/Clock, Browser, Calculator, Calendar (Corporate or Google), Camera, Contacts, Email, Gallery, Gmail, Google+, Maps, Messaging, Messenger, Music Player, Phone, Places, Play Books, Play Movies, Play Music, Play Store, Talk, Video Player, Voice Recorder, Youtube
- Navigation – spoken turn-by-turn directions showing real-time traffic
- Wi-Fi Connectivity – IEEE 802.11 b/g/n
- A-GPS Support for Enhanced Location Accuracy

SPECIFICATIONS

- Technology: GSM/WCMDA
- Frequencies: GSM 850,900,1800,1900
- WCDMA 2100, 900
- Data Transmission: WCMDA, GPRS
- Dimensions: 127.2 x 66.8 x 9.55(mm)
- Display: 4.5" , WVGA (480 x 800) pixels
- Standard Battery: 2,040 [mAh]

ACCESSORIES

- Standard Battery
- Travel Adapter and USB Cable*
- Stereo Headset

Copyright © 2014 LG Electronics. Inc. All right reserved.
Only for training and service purposes

2. PERFORMANCE

2.1 Product Name

LG-D325: WCDMA 900//2100+GSM850/EGSM/DCS/PCS (HSUPA 5.76Mbps(cat6)/HSDPA 21Mbps(cat14)/GPRS Class12/EDGE Class12)

2.2 Supporting Standard

Supporting Standard	WCDMA(FDD1,8)/EGSM/GSM850/DCS1800/PCS1900 with seamless handover Phase 2+(include AMR) SIM Toolkit : Class 1, 2, 3, C-E	
Frequency Range	WCDMA(FDD1) TX : 1920 – 1980 MHz WCDMA(FDD1) RX : 2110 – 2170 MHz WCDMA(FDD8) TX : 880 – 915 MHz WCDMA(FDD8) RX : 925 – 960 MHz EGSM TX : 880 – 915 MHz EGSM RX : 925 – 960 MHz GSM850 TX : 824 – 849 MHz GSM850 RX : 869 – 894 MHz GSM900 TX : 880 – 915 MHz GSM900 RX : 925 – 960 MHz DCS1800 TX :1710 – 1785 MHz DCS1800 RX : 1805 – 1880 MHz PCS1900 TX : 1850 – 1910 MHz PCS1900 RX : 1930 – 1990 MHz	
Application Standard		

2.3 Main Parts : GSM Solution

Item	Part Name	Comment
Digital Baseband	MSM8210 : Qualcomm	
Analog Baseband	PM8110 : Qualcomm	
RF Chip	WTR2605 : Qualcomm	

Copyright © 2014 LG Electronics. Inc. All right reserved.
Only for training and service purposes

2.4 HW Features

List	Type / Spec.	
1. Phone Type	DOP Type	
2. Size	127.2 x 66.8 x 9.55 (mm)	
3. Weight	126.6g	
4. Battery	2,100mAh (typ.), 2,040mAh(min) (Li-Ion)	
5.Chipset	MSM8210	
6. Memory	4GB(EMMC) +1Gb(LPDDR2)	
7. LCD	Size	4.5 inch
	Dot	480(H) X 800(V)
	Color	16.7M colors
	Display Type	Active matrix TFT, Transmissive Type
	NTSC	Typ. 70%
	Contrast Ratio	Typ. 1000:1
	Pixel Pitch(mm)	0.0408 * RGB(V) * 0.1224(H) (208PPI)
8. Main Camera (5M)	Type	CMOS image sensor
	Resolution	2592(H) X 1944(V) pixels.
	Frame Rate	30fps@QSXGA, 30fps@Full HD 1080P 60fps@HD 720P, 120fps@QVGA
	View Angle	68°
	Image Scaling Down	5M,3M,W3M,1M,W1M
	Pixel x size	1.4um x1.4um

Copyright © 2014 LG Electronics. Inc. All right reserved.
Only for training and service purposes

10. Audio	1) MIDI	MIDI
	2) Mono	18 X 10 X 3T Speaker
	3) Receiver	13 X 07 X 2.7T Wideband Receiver
11. Bluetooth	Effective Distance	10M
	Distance	0 m ~ 10 m (depend on environment)
12. WLAN	standard	IEEE 802.11 b/g/n
	Throughput	Max 40Mbps (SDIO Driver performance)
	depend on environment	0 ~ 50m (depend on environment)
13. GPS	type	A-GPS, GNSS

Copyright © 2014 LG Electronics. Inc. All right reserved.
Only for training and service purposes

2.5 HW SPEC

1) WCDMA transmitter specification

Item	Spec.	Min	Typ.	Max	Unit
Maximum Output Power	Power class Ⅲ	21.0	23.5	25.0	dBm/3.84MHz
Frequency Accuracy	-	-200	-	+200	Hz
Minimum Output Power	-	-	-	-50	dBm/3.84MHz
Occupied Bandwidth	-	-	-	4.6	MHz
Adjacent Channel Leakage Power Ratio	Δf = ± 5MHz	-	-	-33	dBm/3.84MHz
	Δf = ± 10MHz	-	-	-43	dBm/3.84MHz
Error Vector Magnitude(EVM)	-	-	-	17	%
Peak Code Domain Error	-	-	-	15	dBm/3.84MHz
Open Loop Output Power	Ior =-106.7dBm/3.84MHz	-46.7	-	-28.7	dBm/3.84MHz
	Ior =-65.7dBm/3.84MHz	-23.0	-	-5.0	dBm/3.84MHz
	Ior =-25.0dBm/3.84MHz	-0.0	-	14.0	dBm/3.84MHz
Transmit Off Power	-	-	-	-56	dBm/3.84MHz
Spectrum Emission Mask	Δf = 2.5~3.5MHz	-35-15 * (Δf-2.5)			dBc/30KHz
	Δf = 3.5~7.5MHz	-35-1 * (Δf-3.5)			dBc/1MHz
	Δf = 7.5~8.5MHz	-39 10 * (Δf-7.5)			dBc/1MHz
	Δf = 8.5~12.5MHz	-49			dBc/1MHz
Transmit Spurious Emission	9kHz ~ 150kHz			-36	dBm
	150kHz ~ 30MHz			-36	dBm
	30MHz ~ 1GHz			-36	dBm
	1GHz ~ 12.5GHz			-30	dBm

Copyright © 2014 LG Electronics. Inc. All right reserved.
Only for training and service purposes

2) WCDMA receiver specification

Item	Specification
Receive Frequency	BD1: 2110 ~ 2170 MHz BD5: 869 MHz ~ 894 MHz BD8: 925 MHz ~ 960 MHz
Reference Sensitivity Level <REF$\hat{I}_{or}$>	Band1 : BER < 0.001 when Îor = -106.7 dBm / 3.84 MHz Band5 : BER < 0.001 when Îor = -104.7 dBm / 3.84 MHz Band8 : BER < 0.001 when Îor = -103.7 dBm / 3.84 MHz
Maximum Input Level	BER < 0.001 when Îor = -25 dBm / 3.84 MHz
Adjacent Channel Selectivity (ACS)	ACS > 33 dB where BER < 0.001 when Îor = <REF$\hat{I}_{or}$> + 14 dB / 3.84 MHz & Ioac = –52 dBm / 3.84 MHz @ ±5 MHz
Blocking Characteristic	BER < 0.001 when Îor = <REF$\hat{I}_{or}$> + 3 dB / 3.84 MHz & Iblocking = -56 dBm / 3.84 MHz @ Fuw(offset) = ±10 MHz or Iblocking = -44 dBm / 3.84 MHz @ Fuw(offset) = ±15 MHz
Spurious Response	BER < 0.001 when Îor = <REF$\hat{I}_{or}$> + 3 dB / 3.84 MHz & Iblocking = -44 dBm
Intermodulation	BER < 0.001 when Îor= <REF$\hat{I}_{or}$> + 3 dB / 3.84 MHz & Iouw1 = -46 dBm @ Fuw1(offset) = ±10 MHz & Iouw2 = -46 dBm / 3.84 MHz @ Fuw2(offset) = ±20 MHz
Spurious Emissions	< -57 dBm / 100 kHz BW @ 9 kHz ≤ f < 1 GHz < -47 dBm / 1 MHz BW @ 1 GHz ≤ f ≤ 12.75 GHz
Inner Loop Power Control In Uplink	Adjust output(TPC command) cmd 1dB 2dB 3dB +1 +0.5/1.5 +1/3 +1.5/4 0 -0.5/+0.5 -0.5/+0.5 -0.5/+0.5 -1 -0.5/-1.5 -1/-3 -1.5/-4 group(10equal command group) +1 +8/+12 +16/+24

Copyright © 2014 LG Electronics. Inc. All right reserved.
Only for training and service purposes

3) HSDPA transmitter specification

	Item	Spec.		Min	Typ.	Max	Unit
Trands mitter	5.2.A Maximum Output Power with HS-DPCCH	1/15 ≤ βc/βd ≤ 12/15 13/15 ≤ βc/βd ≤ 15/8 15/7 ≤ βc/βd ≤ 15/0		21.0 20 19	22.5 22.5 22	25.0 25 25	dBm/3.84MHz
	5.7A HS-DPCCH	MAX / 0dBm	Step 0	0 dBm +/- 1 dB			dB
			Step 1 – Step 0	6 dB +/- 2.3 dB			dB
			Step 2 – Step 3	1 dB +/- 0.6 dB			dB
			Step 5 – Step 4	0 dB +/- 0.6 dB			dB
			Step 6 – Step 7	5 dB +/- 2.3 dB			dB
	5.9A Spectrum Emission Mask with HS-DPCCH	Δf = 2.5~3.5MHz		-35-15 * (Δf-2.5)			dBc/30KHz
		Δf = 3.5~7.5MHz		-35-1 * (Δf-3.5)			dBc/1MHz
		Δf = 7.5~8.5MHz		-39 10 * (Δf-7.5)			dBc/1MHz
		Δf = 8.5~12.5MHz		-49			dBc/1MHz
	5.10A Adjacent Channel Leakage Power Ratio with HS-DPCCH	Δf = ± 5MHz		-	-	-33	dBm/3.84MHz
		Δf = ± 10MHz		-	-	-43	dBm/3.84MHz
	5.13.1A Error Vector Magnitude (EVM) with HS-DPCCH	MAX Power -20 dBm		-	-	17.5	%
Receiver	6.3A Maximum Input Level for HS-PDSCH Reception	Pin = -25dBm		-	-	10	BLER(%)

Copyright © 2014 LG Electronics. Inc. All right reserved.
Only for training and service purposes

4) GSM receiver specification

Item	Spec.
Phase Error	Rms : 5° Peak : 20 °
Frequency Error	GSM : 0.1 ppm DCS/PCS : 0.1 ppm
EMC(Radiated Spurious Emission Disturbance)	GSM/DCS : < -28dBm
Transmitter Output power and Burst Timing	GSM : 5dBm – 33dBm ± 3dB DCS/PCS : 0dBm – 30dBm ± 3dB
Burst Timing	<3.69us
Spectrum due to modulation out to less than 1800kHz offset	200kHz : -36dBm 600kHz : -51dBm/-56dBm
Spectrum due to modulation out to larger than 1800kHz offset to the edge of the transmit band	GSM : 1800-3000kHz :< -63dBc(-46dBm) 3000kHz-6000kHz : <-65dBc(-46dBm) 6000kHz < : < -71dBc(-46dBm) DCS : 1800-3000kHz :< -65dBc(-51dBm) 6000kHz < : < -73dBc(-51dBm)
Spectrum due to switching transient	400kHz : -19dBm/-22dBm(5/0), -23dBm 600kHz : -21dBm/-24dBm(5/0), -26dBm
Reference Sensitivity – TCH/FS	Class II(RBER) : -105dBm(2.439%)
Usable receiver input level range	0.012(-15 - -40dBm)
Intermodulation rejection – Speech channels	± 800kHz, ± 1600kHz : -98dBm/-96dBm (2.439%)
AM Suppression - GSM : -31dBm - DCS : -29dBm	-98dBm/-96dBm (2.439%)
Timing Advance	± 0.5T

Copyright © 2014 LG Electronics. Inc. All right reserved.
Only for training and service purposes

5) Bluetooth transmitter specification

Item	Spec.		Min	Typ.	Max	Unit
Output Power	DH5 PRBS9	Power (Class I)	0	-	+20	dBm
Power Density	DH5 PRBS9	@100kHz RBW		-	+20	dBm
Power Control	DH1 PRBS9	Step size	2	-	8	dB
		Power(min)		-	4	dBm
Frequency Range	DH5 PRBS9	-30dBc @100kHz RBW	2400	-	2483.5	MHz
Tx Output Spectrum (20dB BW)	DH5 PRBS9	$\Delta f = f_H - f_L$		-	1	MHz
Tx Output Spectrum (Adjacent Output Power)	DH5 PRBS9	@M-N = 2		-	-20	dBm
		@M-N ≥ 3		-	-40	dBm
Modulation Index	DH5 11110000	$f1_{AVG}$	140	-	175	kHz
	DH5 10101010	$f2_{MAX}$	115	-		kHz
		$f2_{AVG}/f1_{AVG}$	0.8	-		
Initial Carrier Freq. Tolerance	DH5 PRBS9		-75	-	+75	kHz
Carrier Frequency Drift	DH1 10101010	Freq. Drift	-25	-	+25	kHz
		Drift Rate	-20	-	+20	kHz/50us
	DH3 10101010	Freq. Drift	-40	-	+40	kHz
		Drift Rate	-20	-	+20	kHz/50us
	DH5 10101010	Freq. Drift	-40	-	+40	kHz
		Drift Rate	-20	-	+20	kHz/50us

Copyright © 2014 LG Electronics. Inc. All right reserved.
Only for training and service purposes

6) Bluetooth receiver specification

Item	Spec. BER=0.1%		Min	Typ.	Max	Unit
Sensitivity (Single Slot Packet)	DH1 PRBS9 Input power @BT_w	-		-	-70	dBm
Sensitivity (Multi Slot Packet)	DH5 PRBS9 Input power @BT_w	-		-	-70	dBm
C/I Performance*	DH1 PRBS9 Input power @BT_i	C/I@Co-Channel -60dBm @ BT		-	11	dB
		C/I @1MHz -60dBm@ BT		-	0	
		C/I @2MHz -60dBm@ BT		-	-30	
		C/I @≥3MHz -67dBm@ BT		-	-40	
		C/I @Image -67dBm@ BT		-	-9	
		C/I @ Image±1MHz -67dBm@ BT		-	-20	
Blocking Performance	DH1 PRBS9 Input power @CW	30M ~2 GHz -67dBm@ BT	-10	-		dBm
		2 ~ 2.4 GHz -67dBm@ BT	-27	-		
		2.5 ~ 3 GHz -67dBm@ BT	-27	-		
		3 ~ 12.75 GHz -67dBm@ BT	-10	-		
Intermodulation Performance	DH1 PRBS9 Input power @CW_i	Δf = +5MHz (CW_i) Δf = +10MHz (BT_i) -64dBm@ BT_w	-39	-		dBm
		Δf = -5MHz (CW_i) Δf = -10MHz (BT_i) -64dBm@ BT_w	-39	-		dBm
Maximum Input Level	DH1 PRBS9 Input power @BT_w	-	-20	-		dBm

Copyright © 2014 LG Electronics. Inc. All right reserved.
Only for training and service purposes

7) WLAN 802.11b transceiver specification

Item	Specification
Transmit Frequency	2400 MHz ~ 2483.5 MHz (CH1~CH13)
Tx Power Level	≤ 20dBm under (Europe), ≤ 30dBm under (USA)
Frequency Tolerance	within ±25 PPM
Chip clock Frequency Tolerance	within ±25 PPM
Spectrum Mask	≤ -30 @ fc-22MHz< f <fc-11MHz and fc+11MHz< f <fc+22MHz ≤ -50 @ f < fc-22MHz and f > fc+22MHz
Power ramp on/off time	≤ 2us
Carrier Suppression	≤ -15dB
Modulation Accuracy (Peak EVM)	≤ 35%
Spurious Emissions	< -36 dBm @ 30MHz ~ 1GHz < -30 dBm above @ 1GHz ~ 12.75GHz < -47 dBm @ 1.8GHz ~ 1.9GHz < -47 dBm @ 5.15GHz ~ 5.3GHz
Rx Min input Sensitivity	≤ -76dBm(1Mbps,2Mbps,5.5Mbps,11Mbps) @ FER ≤ 8%
Rx Max input Sensitivity	≥ -10dBm(1Mbps,2Mbps,5.5Mbps,11Mbps) @ FER ≤ 8%
Rx Adjacent Channel Rejection	≥ 35dB @FER ≤ 8%, interference input signal -70dBm@fc±25MHz(11Mbps)

Copyright © 2014 LG Electronics. Inc. All right reserved.
Only for training and service purposes

8) WLAN 802.11g transceiver specification

Item	Specification
Transmit Frequency	2400 MHz ~ 2483.5 MHz (CH1~CH13)
Tx Power Level	≤ 20dBm under (Europe), ≤ 30dBm under (USA)
Frequency Tolerance	within ±25 PPM
Chip clock Frequency Tolerance	within ±25 PPM
Spectrum Mask	≤ -20 @ ±11MHz offset (9Mhz ~ 11MHz) ≤ -28 @ ±20MHz offset (11MHz ~ 20Mhz) ≤ -40 @ ±30MHz offset (20MHz ~ 30Mhz)
Transmitter constellation error (rms EVM)	≤ -5dB
Spurious Emissions	< -36 dBm @ 30MHz ~ 1GHz < -30 dBm above @ 1GHz ~ 12.75GHz < -47 dBm @ 1.8GHz ~ 1.9GHz < -47 dBm @ 5.15GHz ~ 5.3GHz
Rx Min input Sensitivity	PER ≤ 10% -82dBm@6Mbps, -81dBm@9Mbps, -79dBm@12Mbps -77dBm@18Mbps, -74dBm@24Mbps, -70dBm@36Mbps -66dBm@48Mbps, -65dBm@54Mbps
Rx Max input Sensitivity	≥ -20dBm(6,9,12,18,24,36,48,54Mbps) @ PER ≤ 10%
Rx Adjacent Channel Rejection	PER ≤ 10%, ACR ≥ 16dB@6Mbps, ACR ≥ 15dB@9Mbps, ACR ≥ 13dB@12Mbps, ACR ≥ 11dB@18Mbps, ACR ≥ 8dB@24Mbps, ACR ≥ 4dB@36Mbps ACR ≥ 0dB@48Mbps, ACR ≥ -1dB@54Mbps ※ ACR shall be measured by setting the desired signal's strength 3 dB above the rate-dependent sensitivity specified in min input sensitivity

Copyright © 2014 LG Electronics. Inc. All right reserved.
Only for training and service purposes

9) WLAN 802.11n transceiver specification

Item	Specification
Transmit Frequency	2400 MHz ~ 2483.5 MHz (CH1~CH13)
Tx Power Level	≤ 20dBm under (Europe), ≤ 30dBm under (USA)
Frequency Tolerance	within ±25 PPM
Chip clock Frequency Tolerance	within ±25 PPM
Spectrum Mask	≤ -20 @ ±11MHz offset (9Mhz ~ 11MHz) ≤ -28 @ ±20MHz offset (11MHz ~ 20Mhz) ≤ -45 @ ±30MHz offset (20MHz ~ 30Mhz)
Transmitter constellation error (rms EVM)	≤ -5dB@6.5Mbps, ≤ -10dB@13Mbps, ≤ -13dB@19.5Mbps, ≤ -16dB@26Mbps, ≤ -19dB@39Mbps, ≤ -22dB@52Mbps, ≤ -25dB@58.5Mbps, ≤ -28dB@65Mbps
Spurious Emissions	< -36 dBm @ 30MHz ~ 1GHz < -30 dBm above @ 1GHz ~ 12.75GHz < -47 dBm @ 1.8GHz ~ 1.9GHz < -47 dBm @ 5.15GHz ~ 5.3GHz
Rx Min input Sensitivity	PER ≤ 10% -82dBm@6.5Mbps, -79dBm@13Mbps, -77dBm@19.5Mbps -74dBm@26Mbps, -70dBm@39Mbps, -66dBm@52Mbps -65dBm@58.5Mbps, -64dBm@65Mbps
Rx Max input Sensitivity	≥ -20dBm(6.5,13,19.5,26,39,52,58.5,65Mbps) @ PER ≤ 10%
Rx Adjacent Channel Rejection	PER ≤ 10%, ACR ≥ 16dB@6.5Mbps, ACR ≥ 13dB@13Mbps, ACR ≥ 11dB@19.5Mbps, ACR ≥ 8dB@26Mbps, ACR ≥ 4dB@39Mbps, ACR ≥ 0dB@52Mbps ACR ≥ -1dB@58.5Mbps, ACR ≥ -2dB@65Mbps ※ ACR shall be measured by setting the desired signal's strength 3 dB above the rate-dependent sensitivity specified in min input sensitivity

Copyright © 2014 LG Electronics. Inc. All right reserved.
Only for training and service purposes

10) GPS receiver specification

Item	Spec.
Sensitivity Test	Success rate ≥ 60% @ -154 dBm

11) Current consumption

** Test condition for Standby current consumption should be as below.

: Measurement time 1hr, with Agilent & CMT JIG

Item	Specification	
	WCDMA	GSM
1. Sleep Mode	Under 3.5mA	Under 3.5mA
2. Sleep : connector Ear jack	Under 4.5mA	Under 4.5mA
3. Current(Sleep & Idle AVG)	Under 4.5mA @ DRX 7	Under 4.5mA @ P.P 5
4. BT Connected idle	Under 6mA	Under 6mA
5. Talk Mode	- Max Pwr Under 600mA @ Avg - Tx 10dBm Under 400 mA @ Avg	GSM LVL 5 under 400 mA @ Avg
6. No SVC Mode	under 200mA	Under 200 mA
7. Power Off Mode	under 300uA	Under 300 uA

Copyright © 2014 LG Electronics. Inc. All right reserved.
Only for training and service purposes

12) RSSI indicator (Based on Cell power)

BAR	WCDMA	GSM/DCS/PCS
5→4	-91 ±2dBm	-89 ±2dBm
4→3	-96 ±2dBm	-94 ±2dBm
3→2	-99 ±2dBm	-100 ±2dBm
2→1	-103 ±2dBm	-104 ±2dBm
1→0	-105 ±2dBm	-110 ±2dBm

13) Current consumption

Standby (WCDMA)	Over 466 Hours Under 4.5mA	DRX 7 @ BATT Capacity : 2100mAh

14) Charging hour

Under 4 hour (2100mAh battery, 700mA TA)

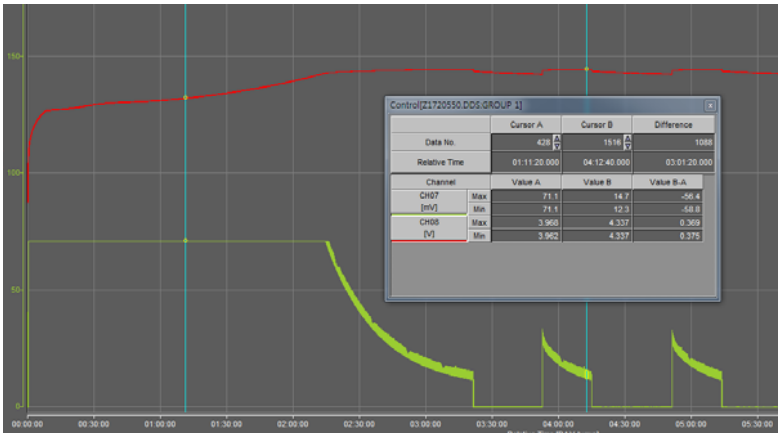

Copyright © 2014 LG Electronics. Inc. All right reserved.
Only for training and service purposes

15) Battery indicator

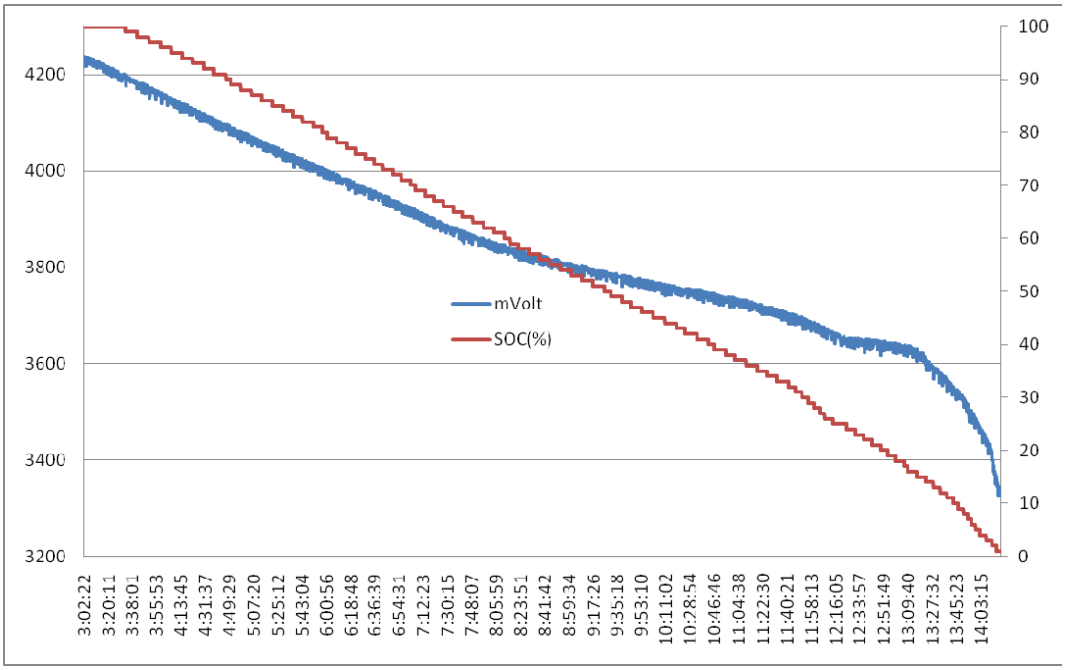

Battery Bar	Specification	Battery Bar	Specification
BAR 20 (Full)	98% over	BAR 9 --> 8	43% -> 42%
BAR 20 --> 19	98% -> 97%	BAR 8 --> 7	38% -> 37%
BAR 19 --> 18	93% -> 92%	BAR 7 --> 6	33% -> 32%
BAR 18 --> 17	88% -> 87%	BAR 6 --> 5	28% -> 27%
BAR 17 --> 16	83% -> 82%	BAR 5 --> 4	23% -> 22%
BAR 16 --> 15	78% -> 77%	BAR 4 --> 3	18% -> 17%
BAR 15 --> 14	73% -> 72%	BAR 3 --> 2	13% -> 12%
BAR 14 --> 13	68% -> 67%	BAR 2 --> 1	8% -> 7%
BAR 13 --> 12	63% -> 62%	BAR 1 --> 0	3% -> 2%
BAR 12 --> 11	58% -> 57%	Power off	1%
BAR 11 --> 10	53% -> 52%	Low Battery Pop-up	15%, 5%, 0%
BAR 10 --> 9	48% -> 47%		

Copyright © 2014 LG Electronics. Inc. All right reserved.
Only for training and service purposes

2.6 D325 Figures

Copyright © 2014 LG Electronics. Inc. All right reserved.
Only for training and service purposes

3. TROUBLE SHOOTING

3.1 WCDMA Rx Part

3.1.1 WCDMA_B1 Rx

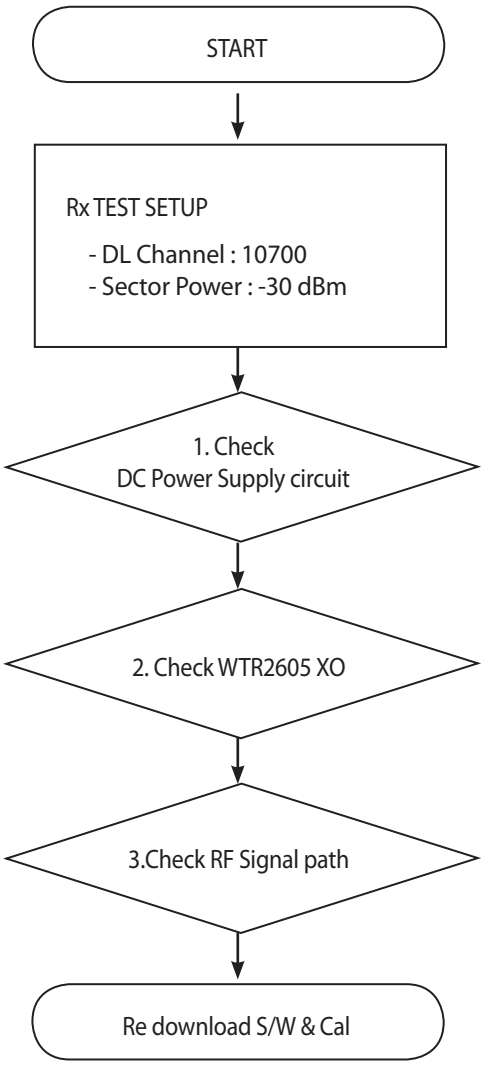

there are no Test Points on the IQ Data Line. So It is impossible to check the IQ Data Wave form

Copyright © 2014 LG Electronics. Inc. All right reserved.
Only for training and service purposes

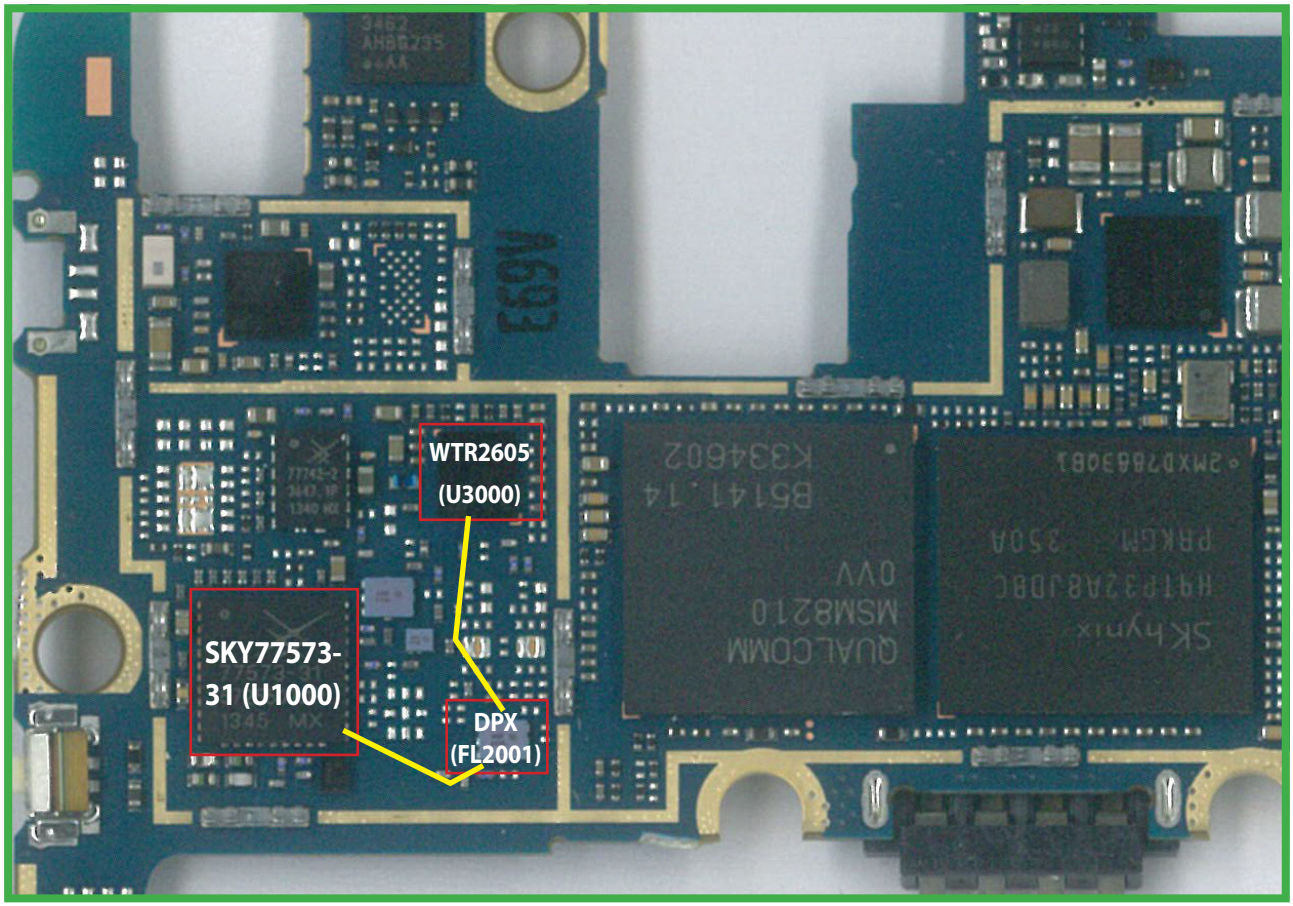

<Main Top>

Copyright © 2014 LG Electronics. Inc. All right reserved.
Only for training and service purposes

3.1.1.1 Checking DC Power supply circuit

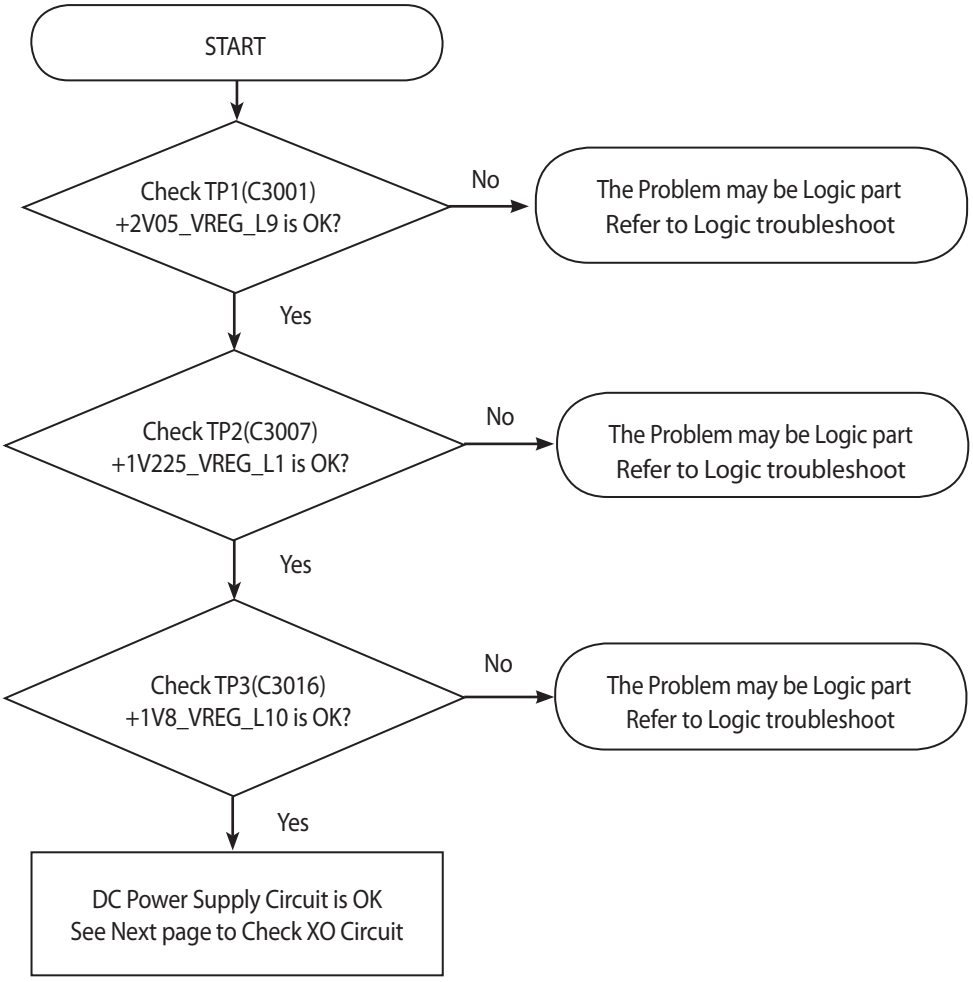

Copyright © 2014 LG Electronics. Inc. All right reserved.
Only for training and service purposes

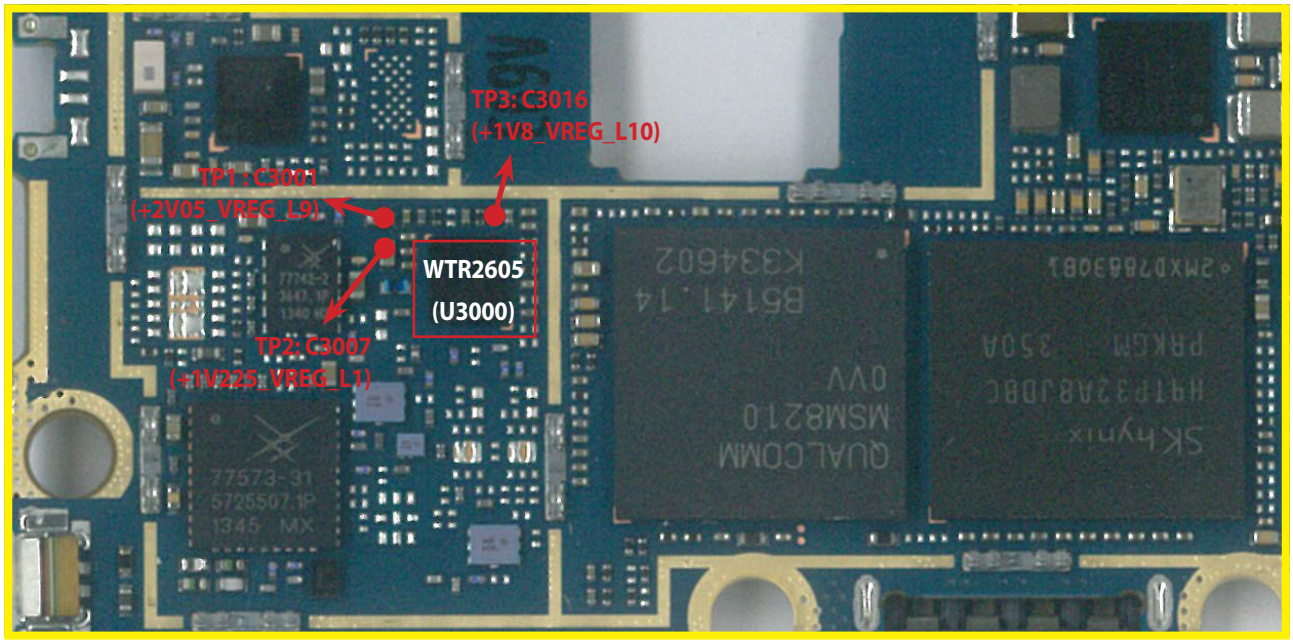

<Main Top>

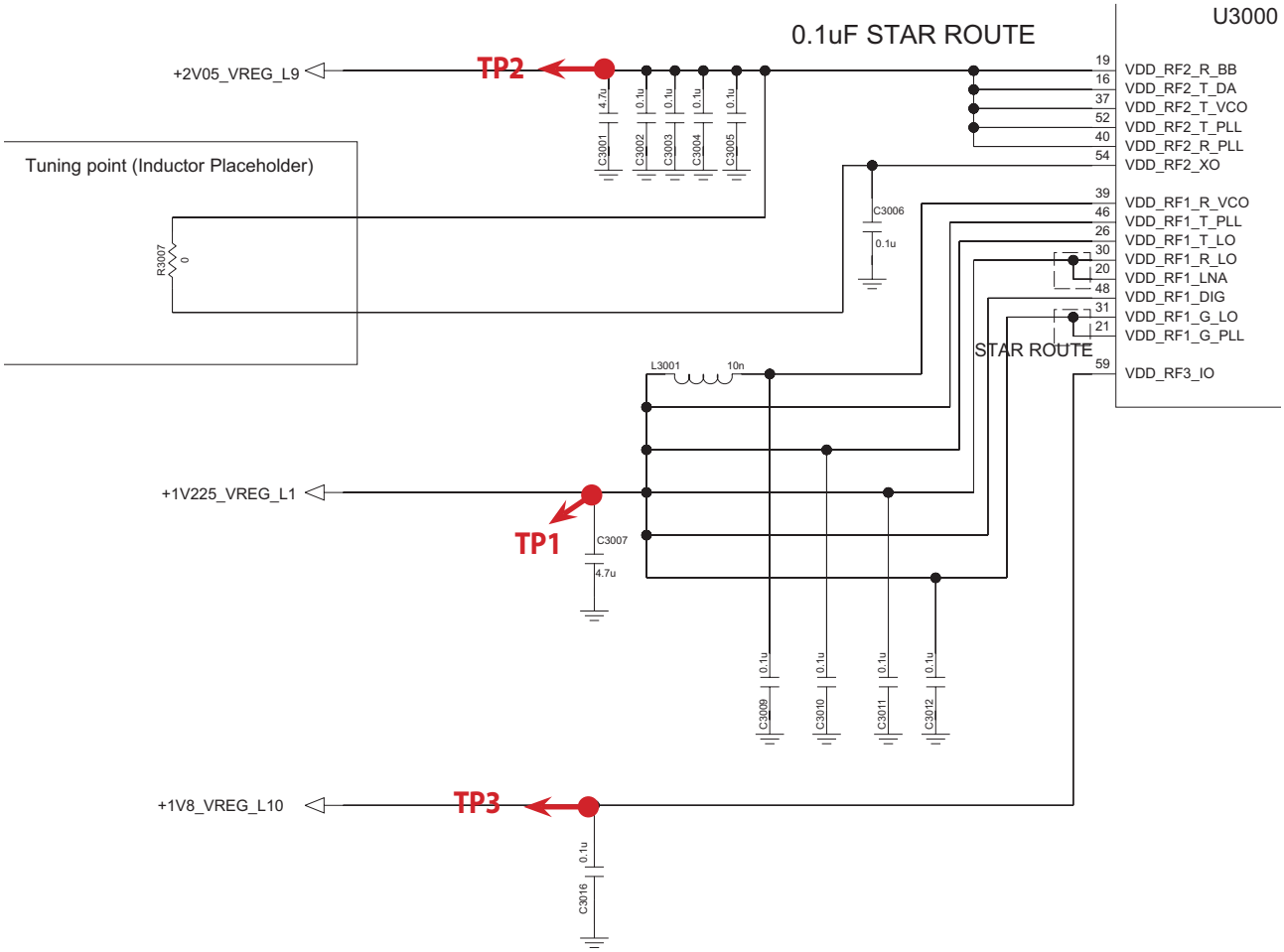

Copyright © 2014 LG Electronics. Inc. All right reserved.
Only for training and service purposes

3.1.1.2 Checking WTR2605 XO circuit

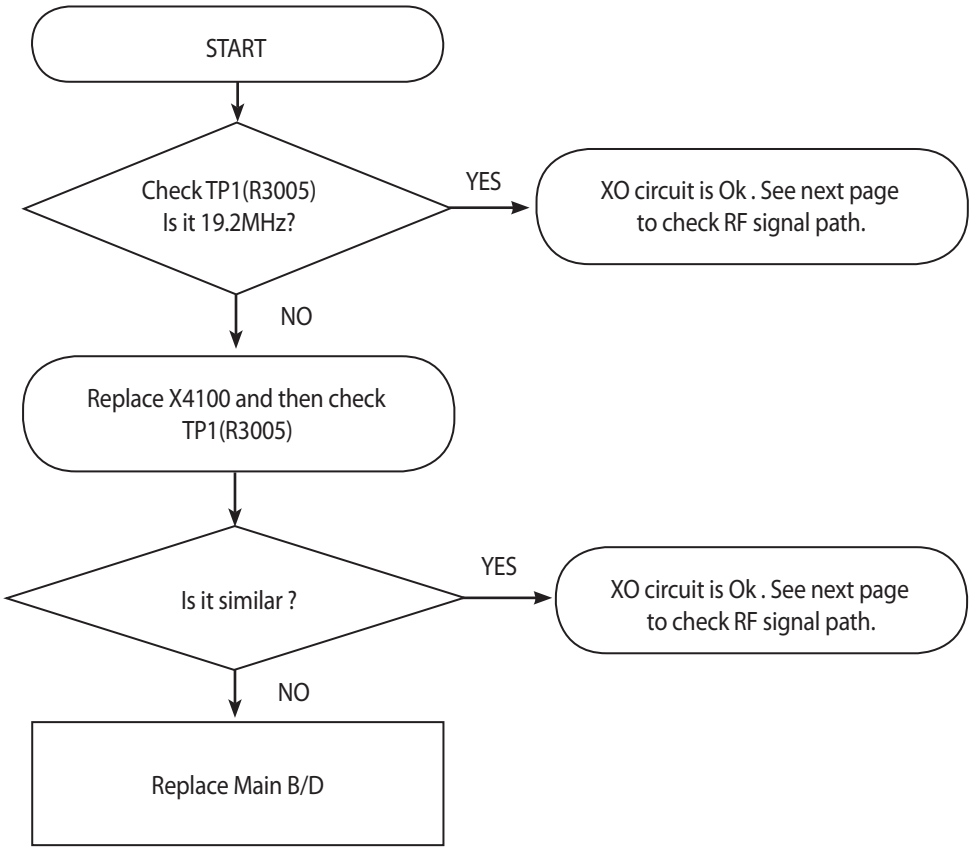

Copyright © 2014 LG Electronics. Inc. All right reserved.
Only for training and service purposes

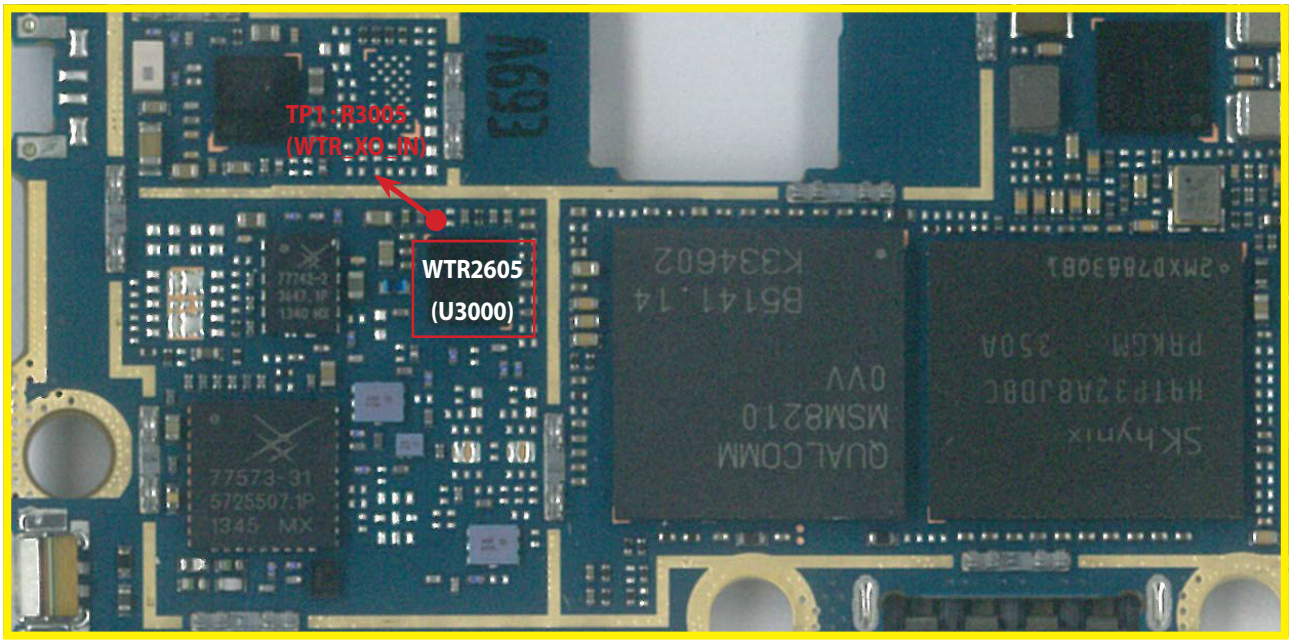

<Main Top>

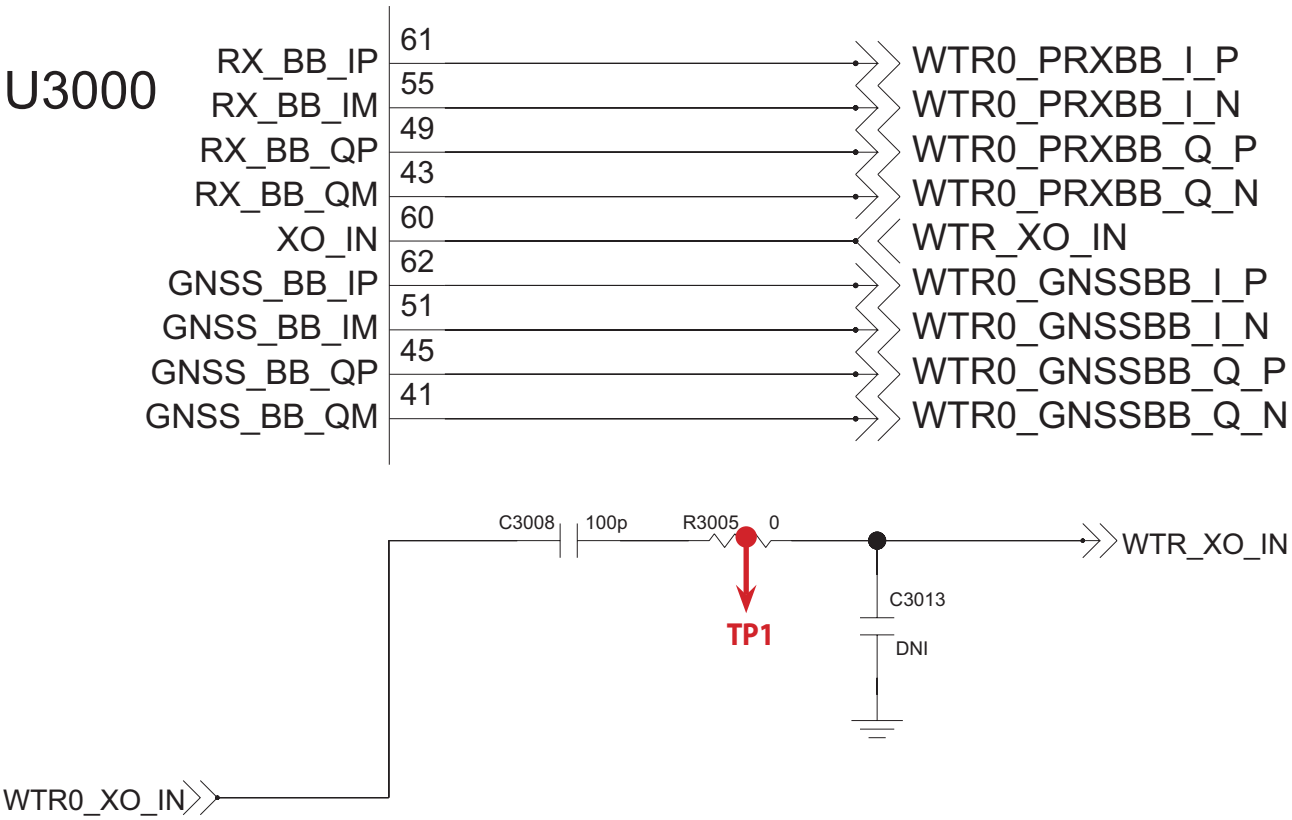

Copyright © 2014 LG Electronics. Inc. All right reserved.
Only for training and service purposes

3.1.1.3 Checking RF signal path (TX Module)

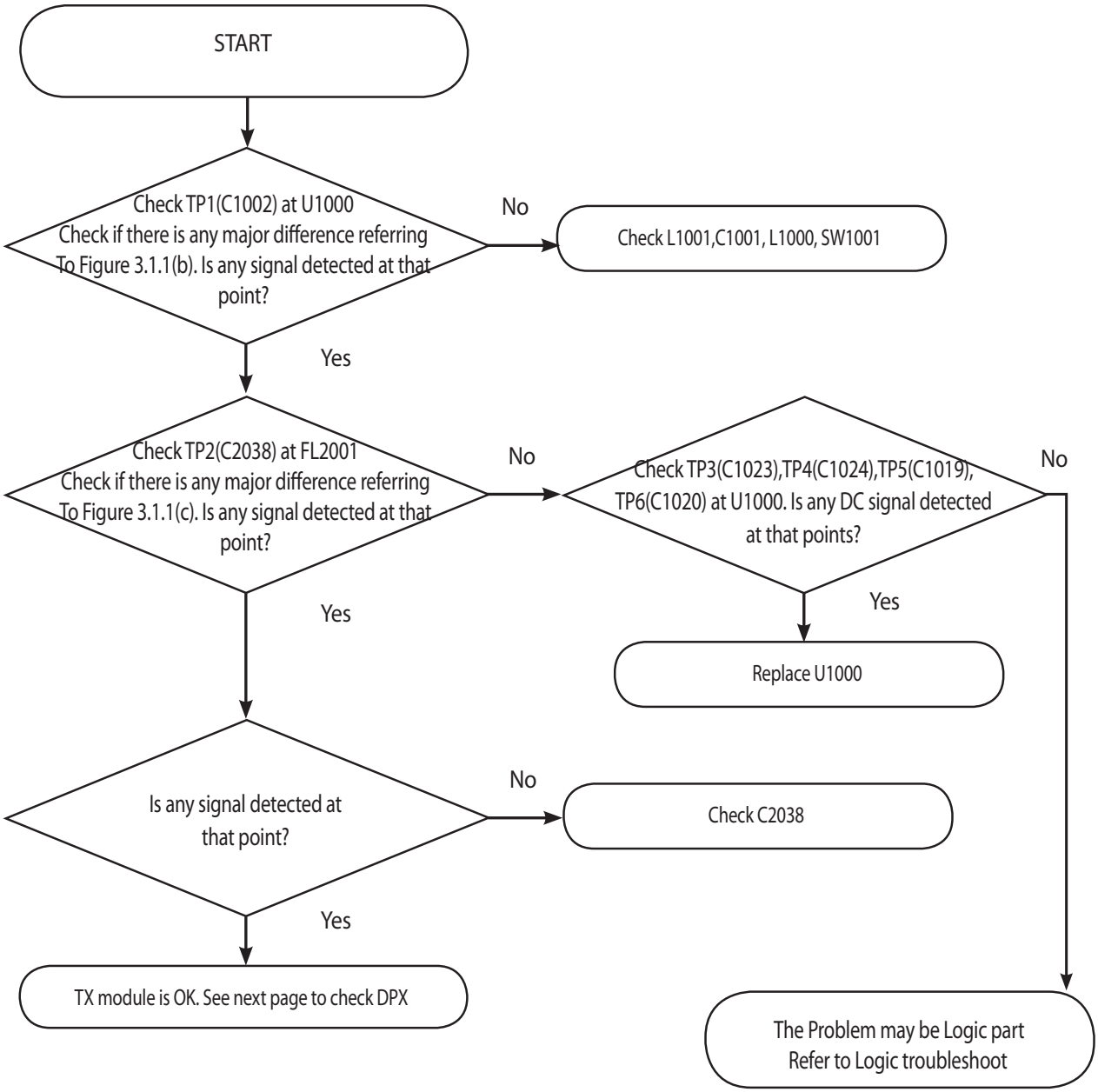

Copyright © 2014 LG Electronics. Inc. All right reserved.
Only for training and service purposes

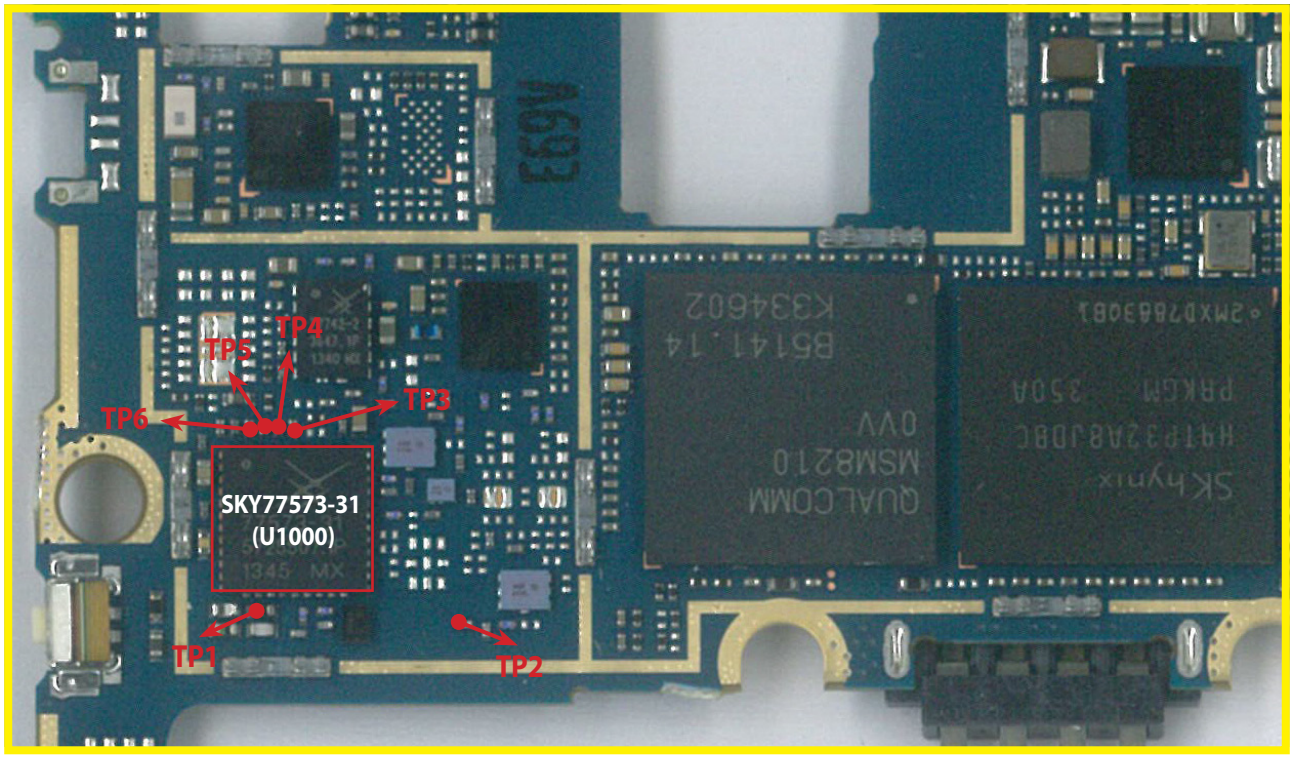

<Main Top>

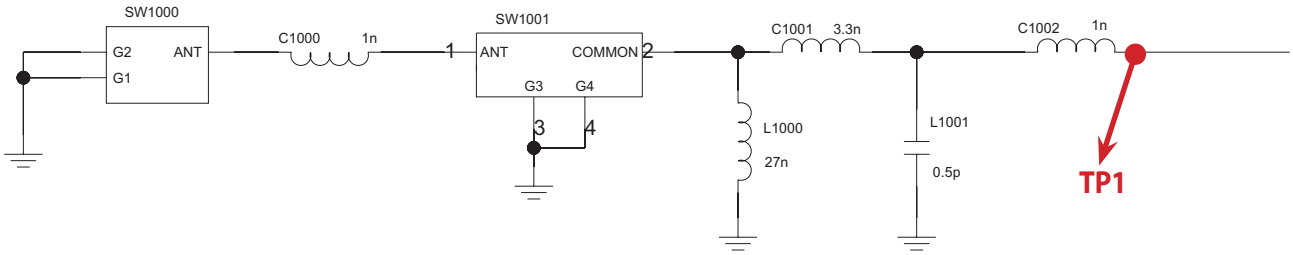

Copyright © 2014 LG Electronics. Inc. All right reserved.
Only for training and service purposes

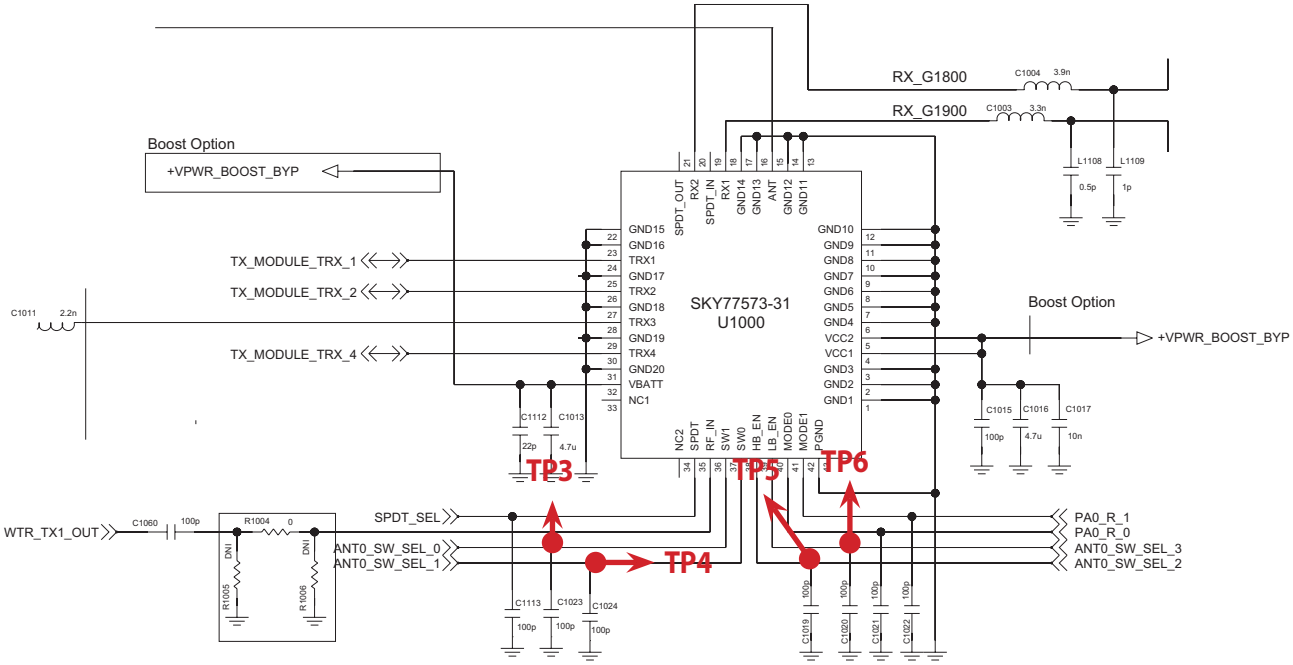

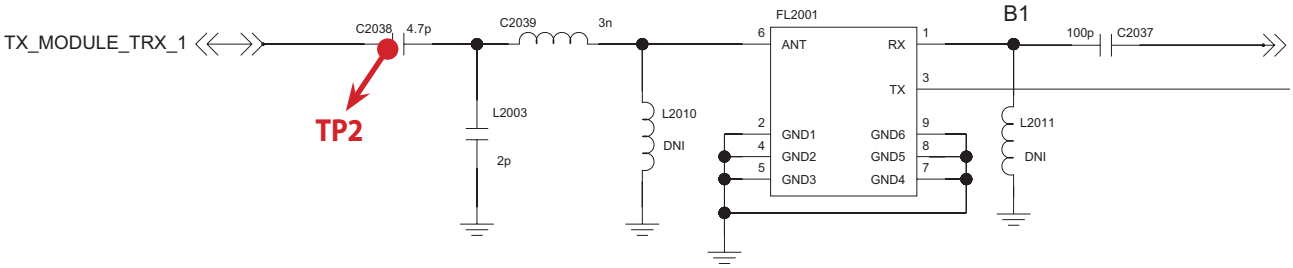

Copyright © 2014 LG Electronics. Inc. All right reserved.
Only for training and service purposes

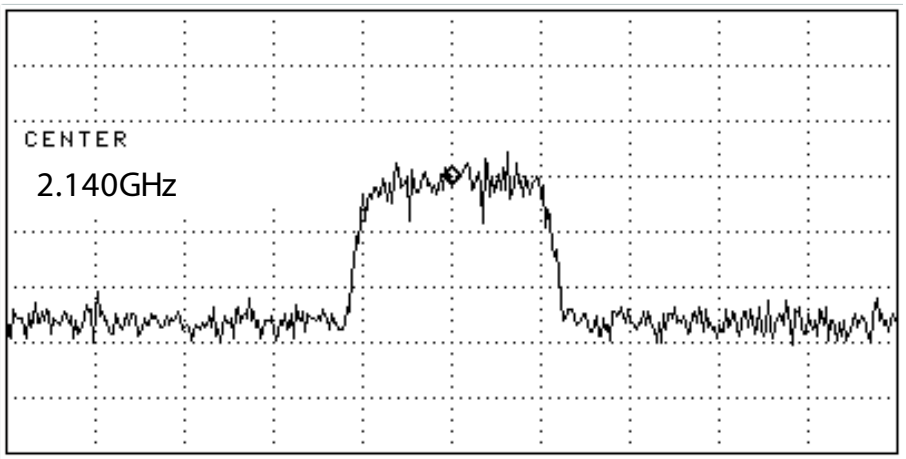

Figure 3.1.1 (b) TP1

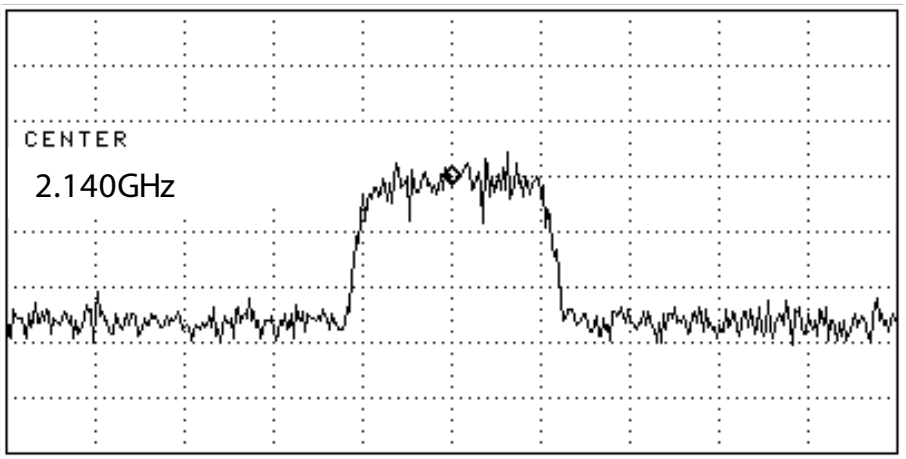

Figure 3.1.1 (c) TP2

Copyright © 2014 LG Electronics. Inc. All right reserved.
Only for training and service purposes

3.1.1.4 Checking RF signal path(Duplexer)

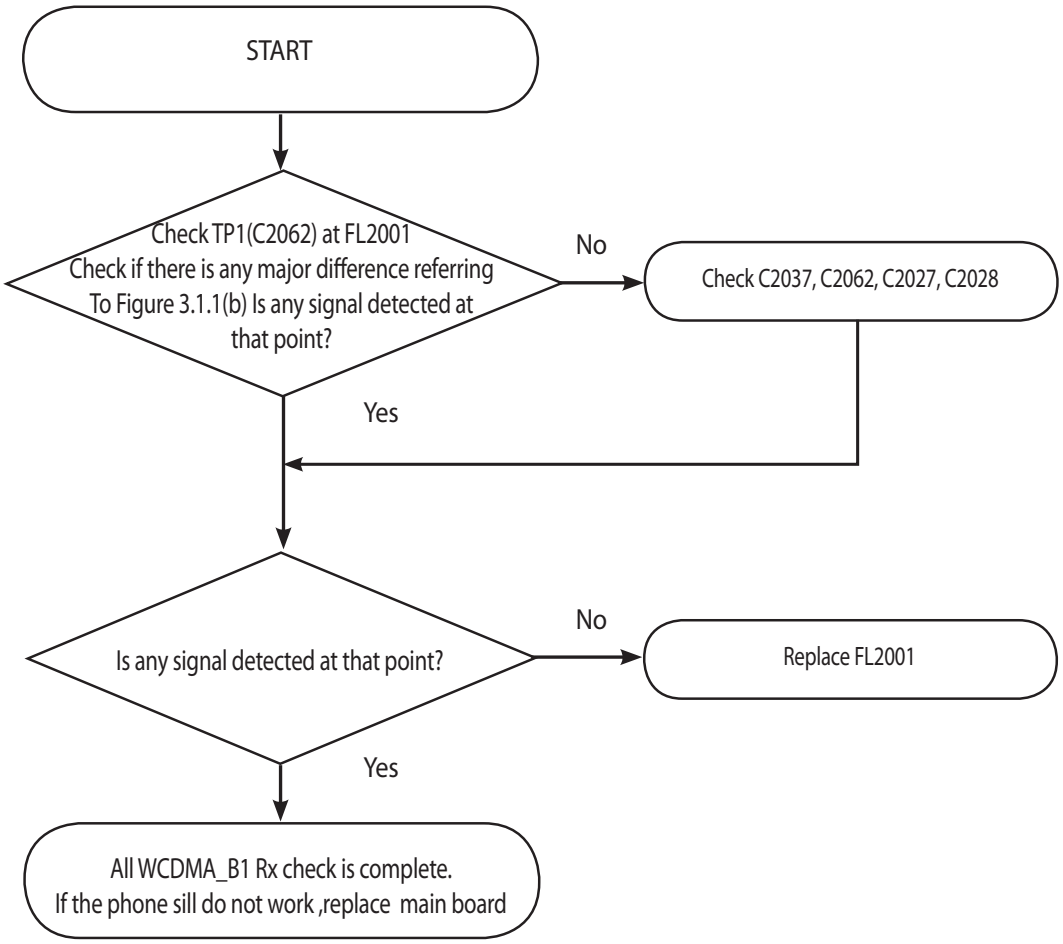

Copyright © 2014 LG Electronics. Inc. All right reserved.
Only for training and service purposes

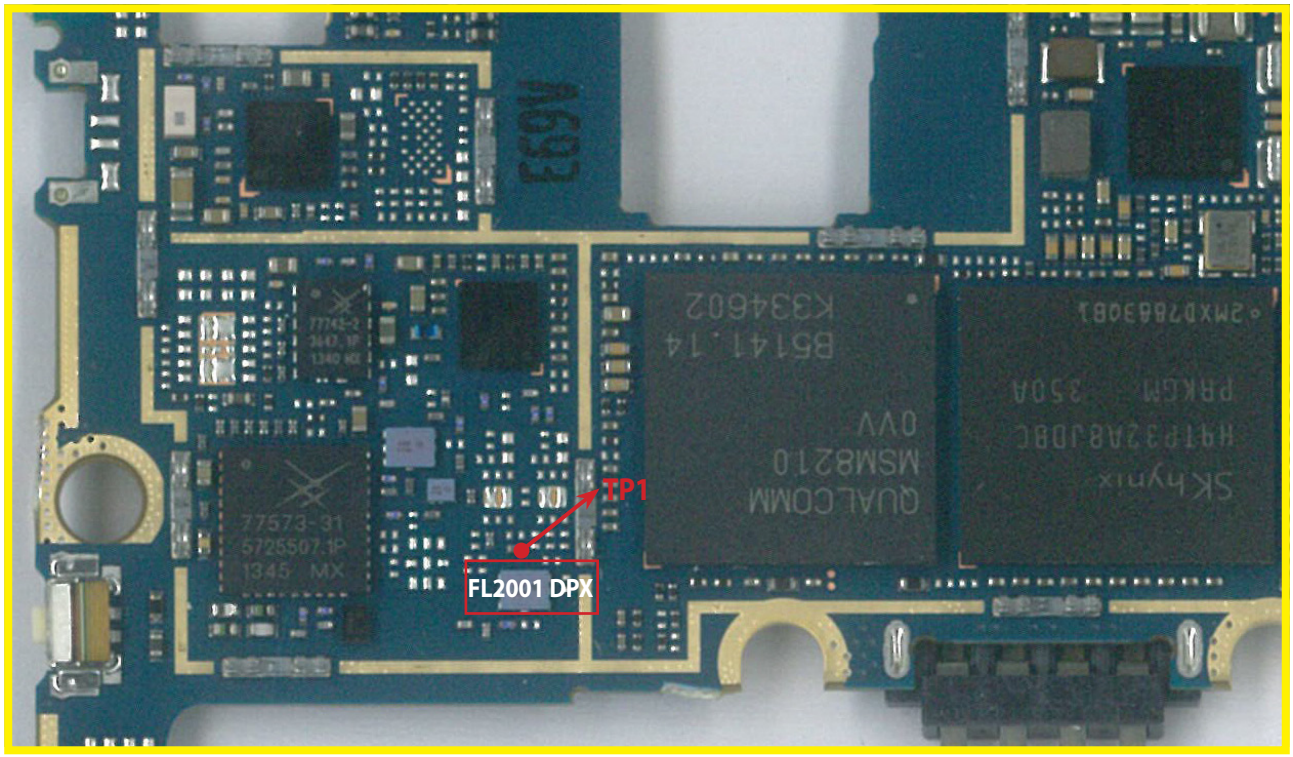

<Main Top>

Copyright © 2014 LG Electronics. Inc. All right reserved.
Only for training and service purposes

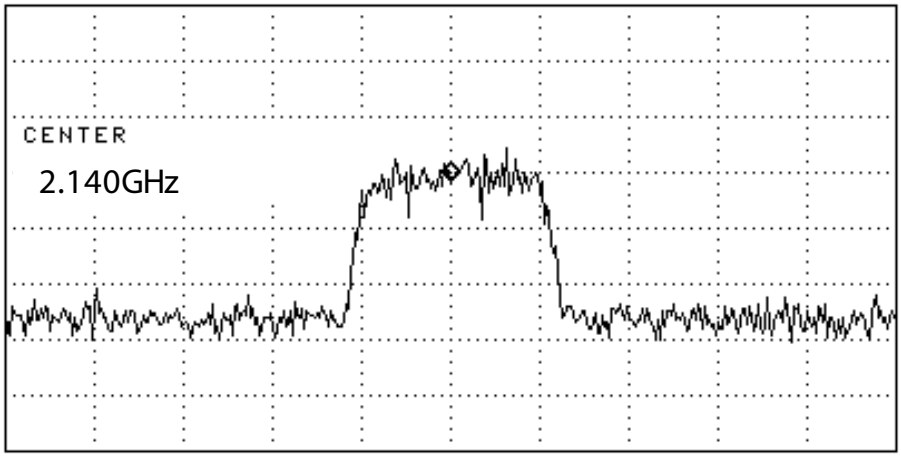

Figure 3.1.1 (b)

Copyright © 2014 LG Electronics. Inc. All right reserved.
Only for training and service purposes

3.1.2 WCDMA_B8 Rx

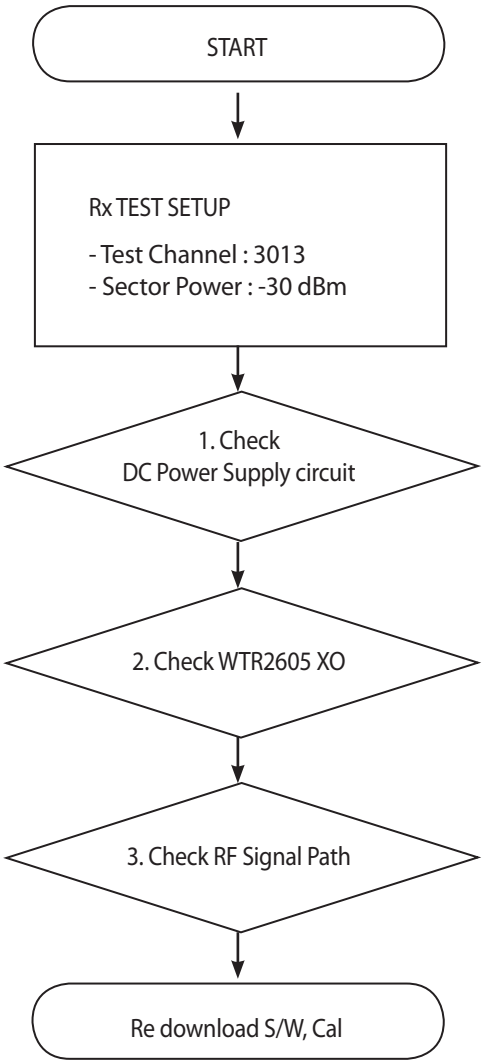

there are no Test Points on the IQ Data Line. So It is impossible to check the IQ Data Wave form

Copyright © 2014 LG Electronics. Inc. All right reserved.
Only for training and service purposes

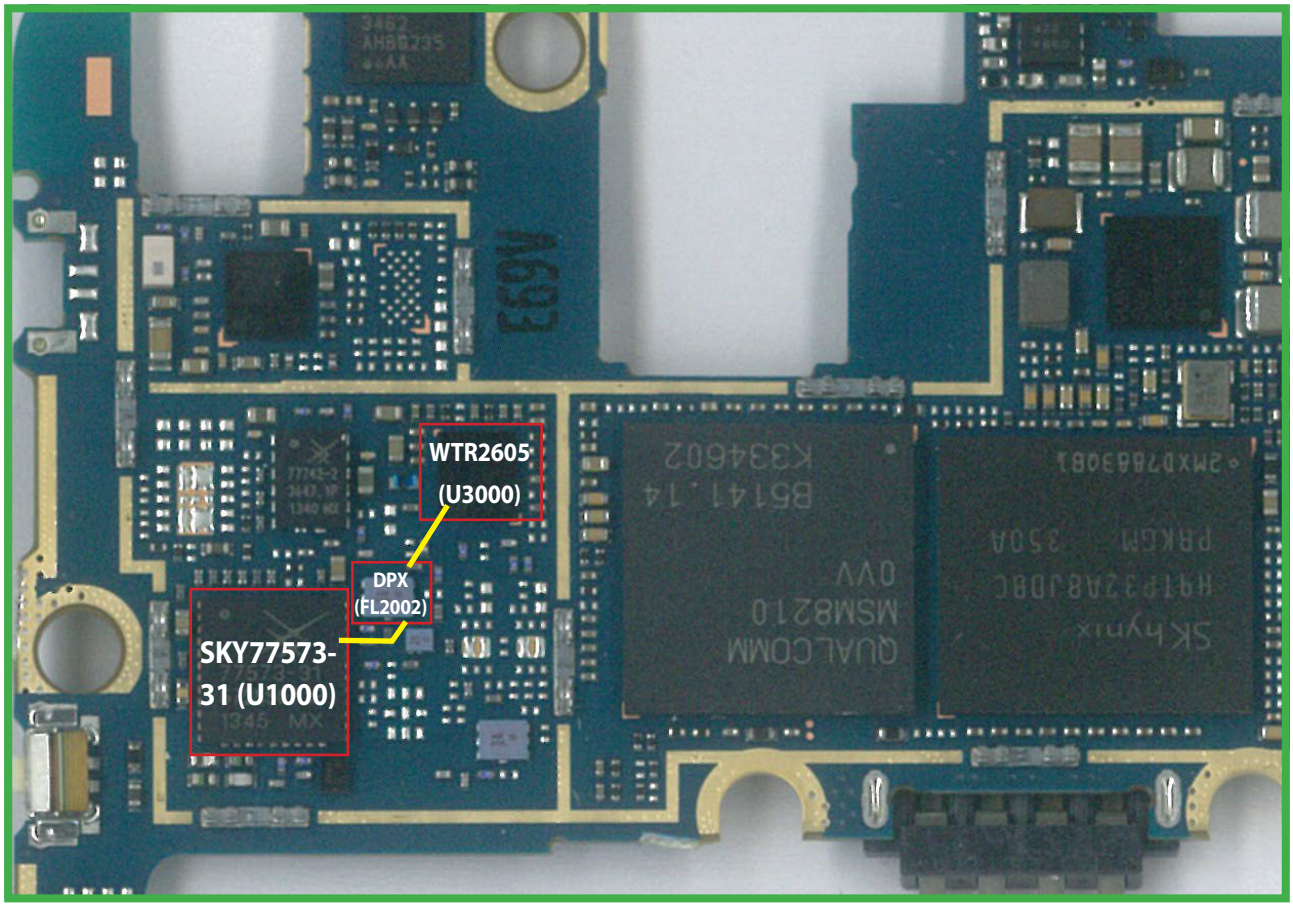

<Main Top>

Copyright © 2014 LG Electronics. Inc. All right reserved.
Only for training and service purposes

3.1.2.1 Checking DC Power supply circuit

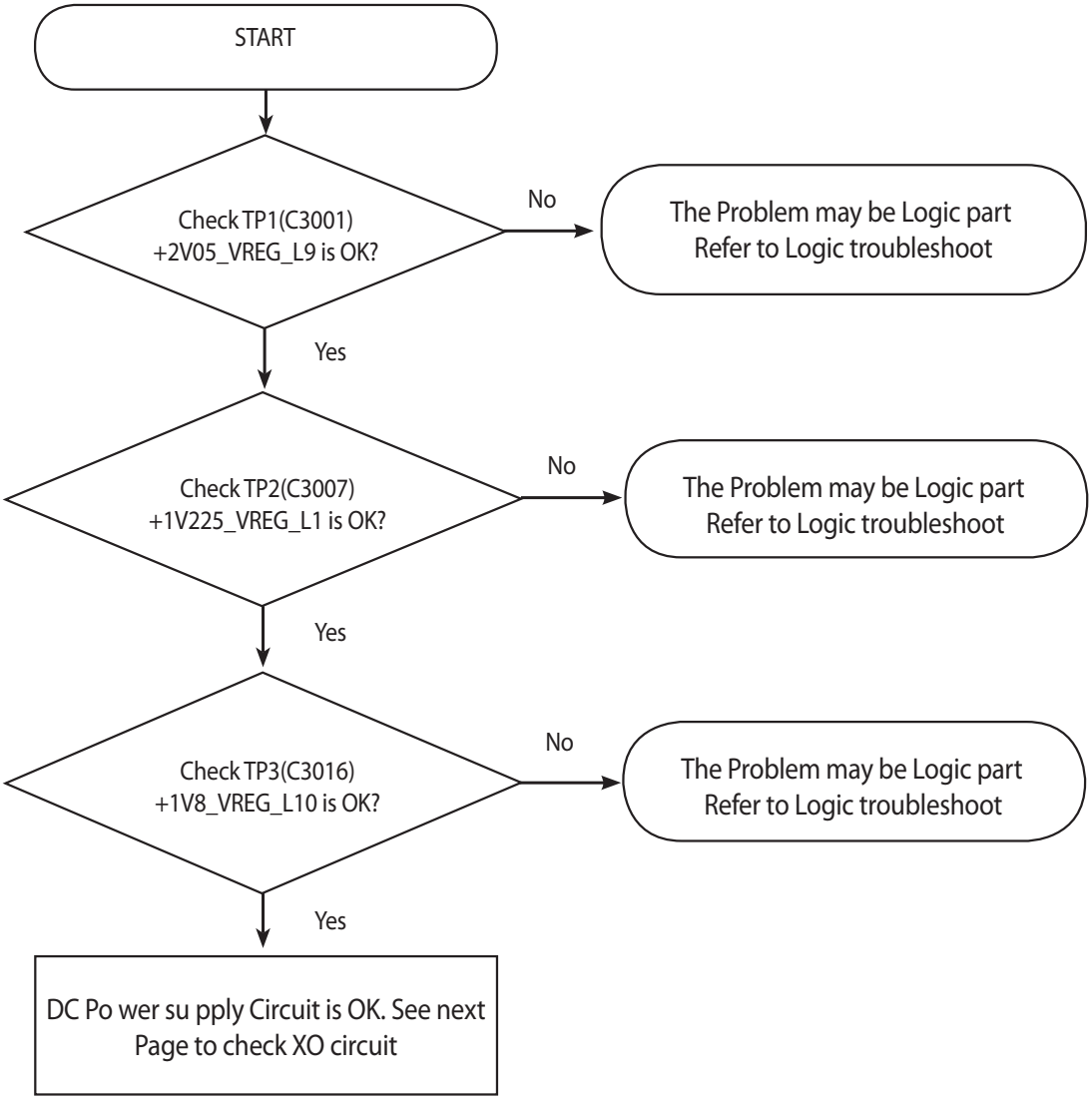

Copyright © 2014 LG Electronics. Inc. All right reserved.
Only for training and service purposes

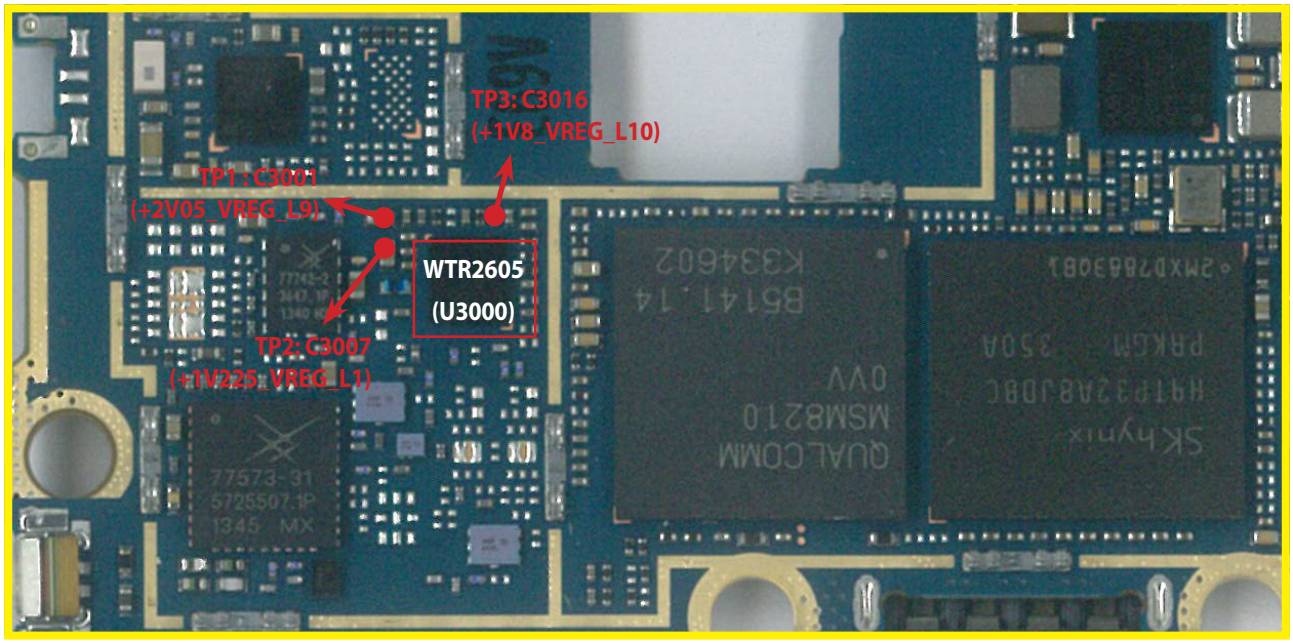

<Main Top>

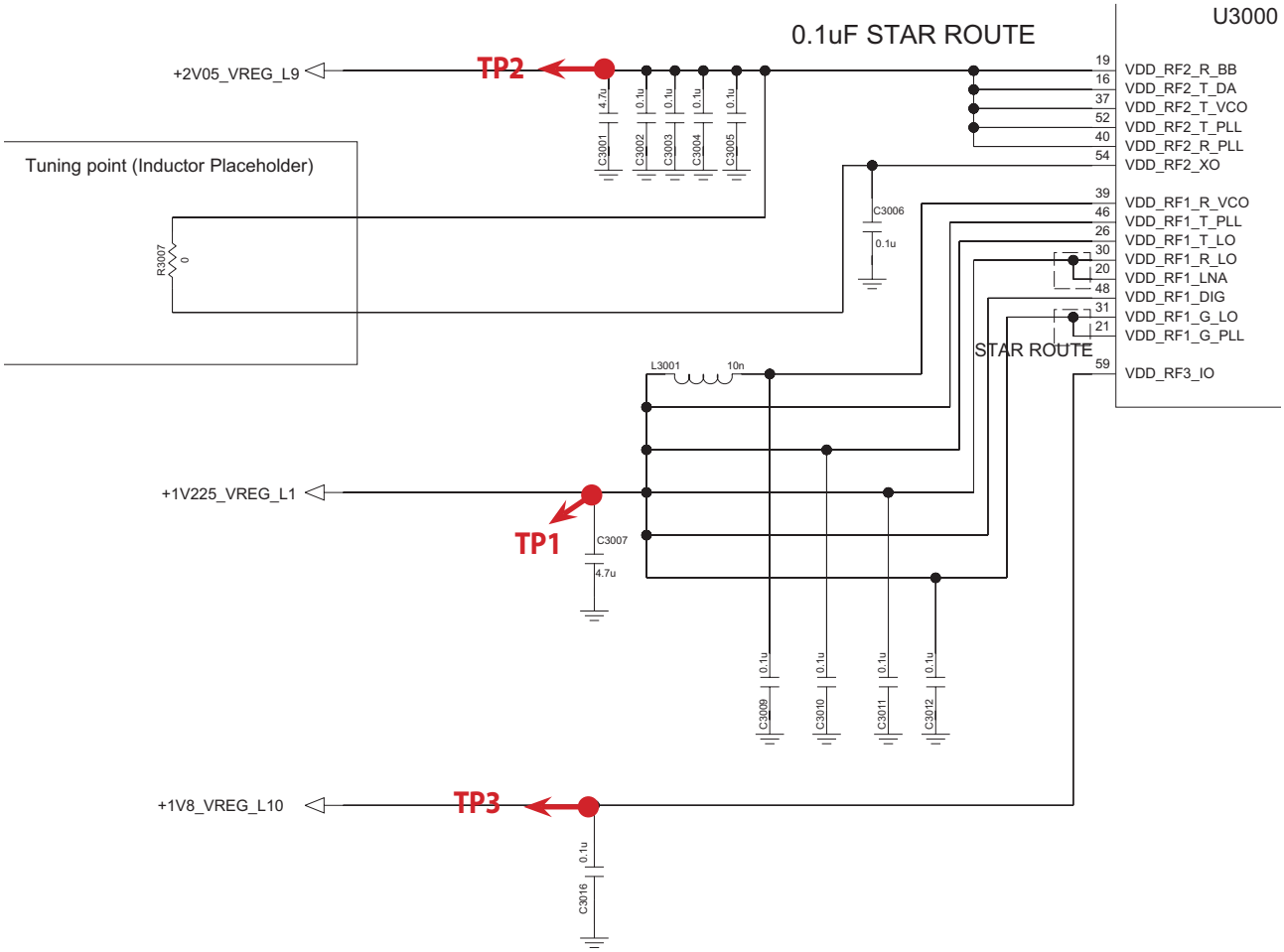

Copyright © 2014 LG Electronics. Inc. All right reserved.
Only for training and service purposes

3.1.2.2 Checking MT6162 XO circuit

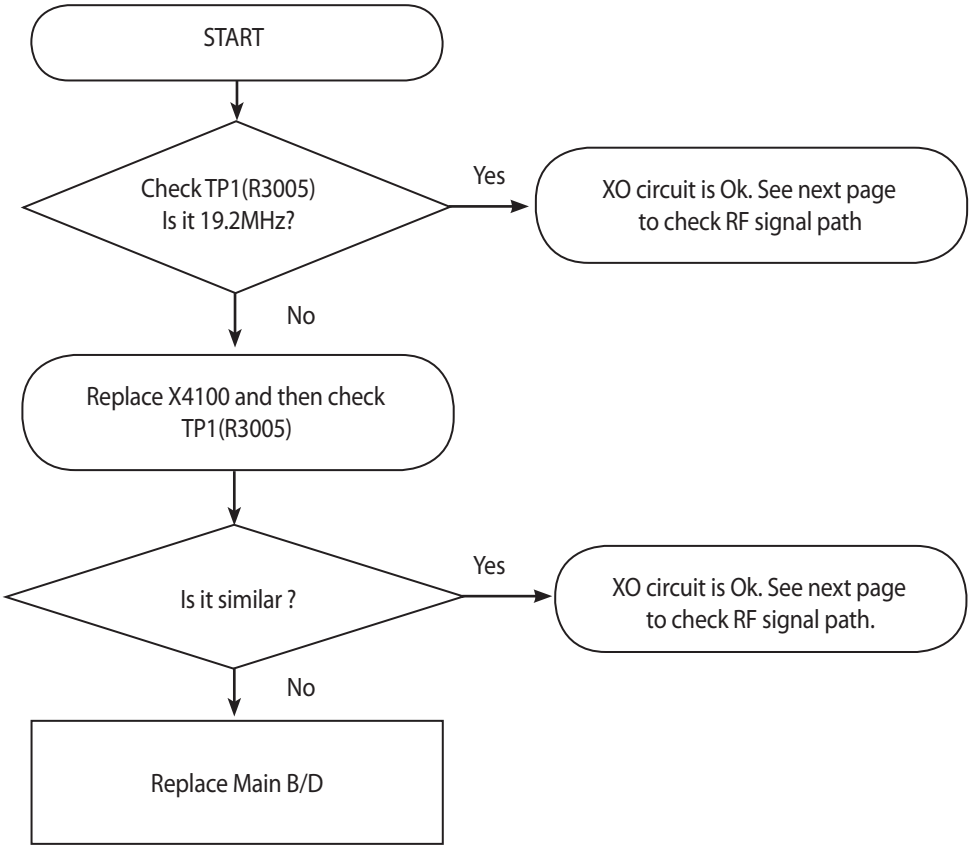

Copyright © 2014 LG Electronics. Inc. All right reserved.
Only for training and service purposes

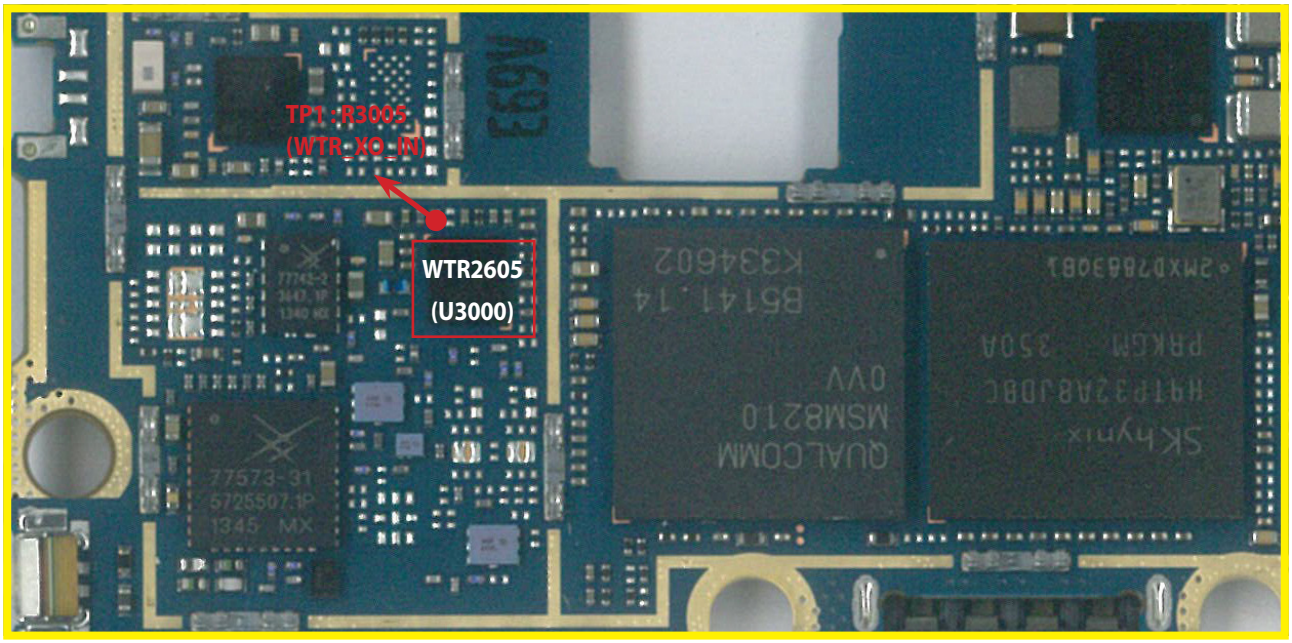

<Main Top>

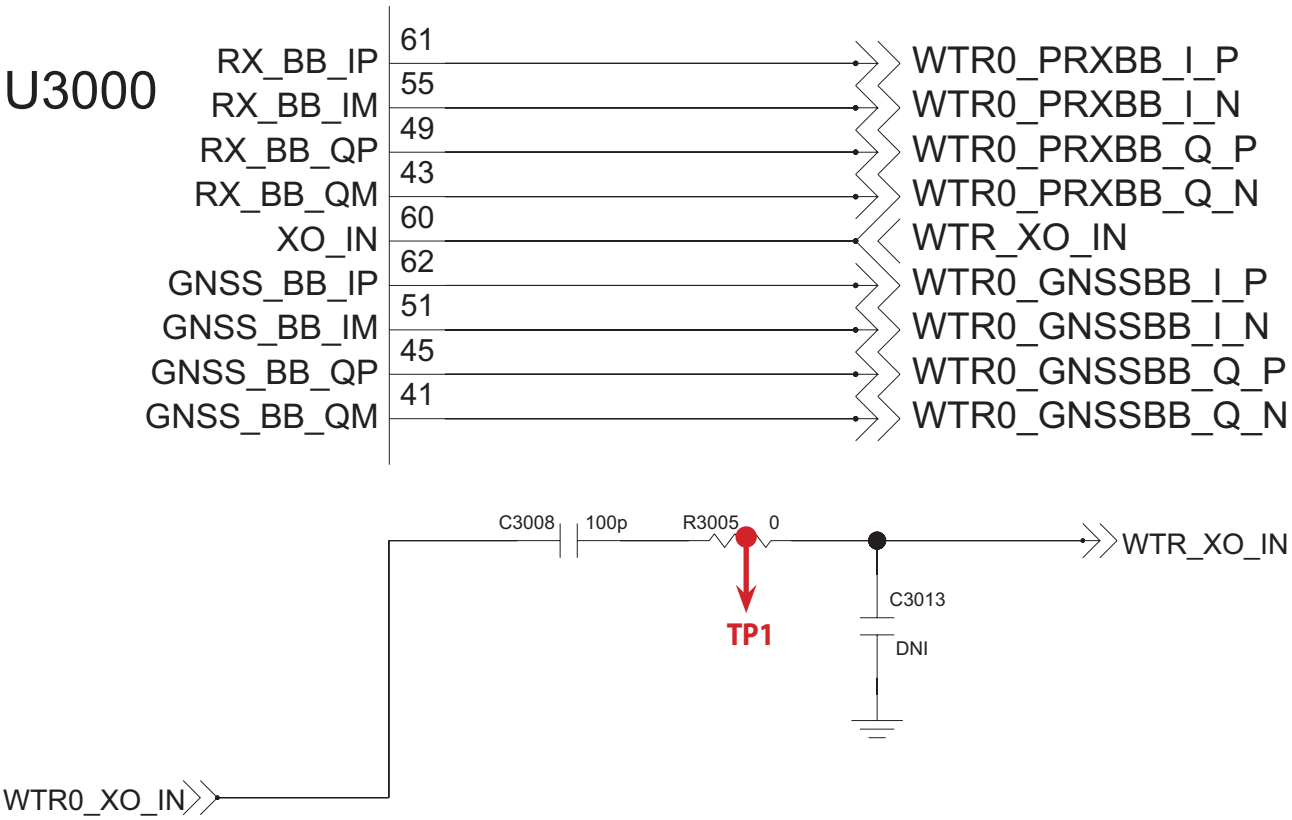

Copyright © 2014 LG Electronics. Inc. All right reserved.
Only for training and service purposes

3.1.2.3 Checking RF signal path (Tx Module)

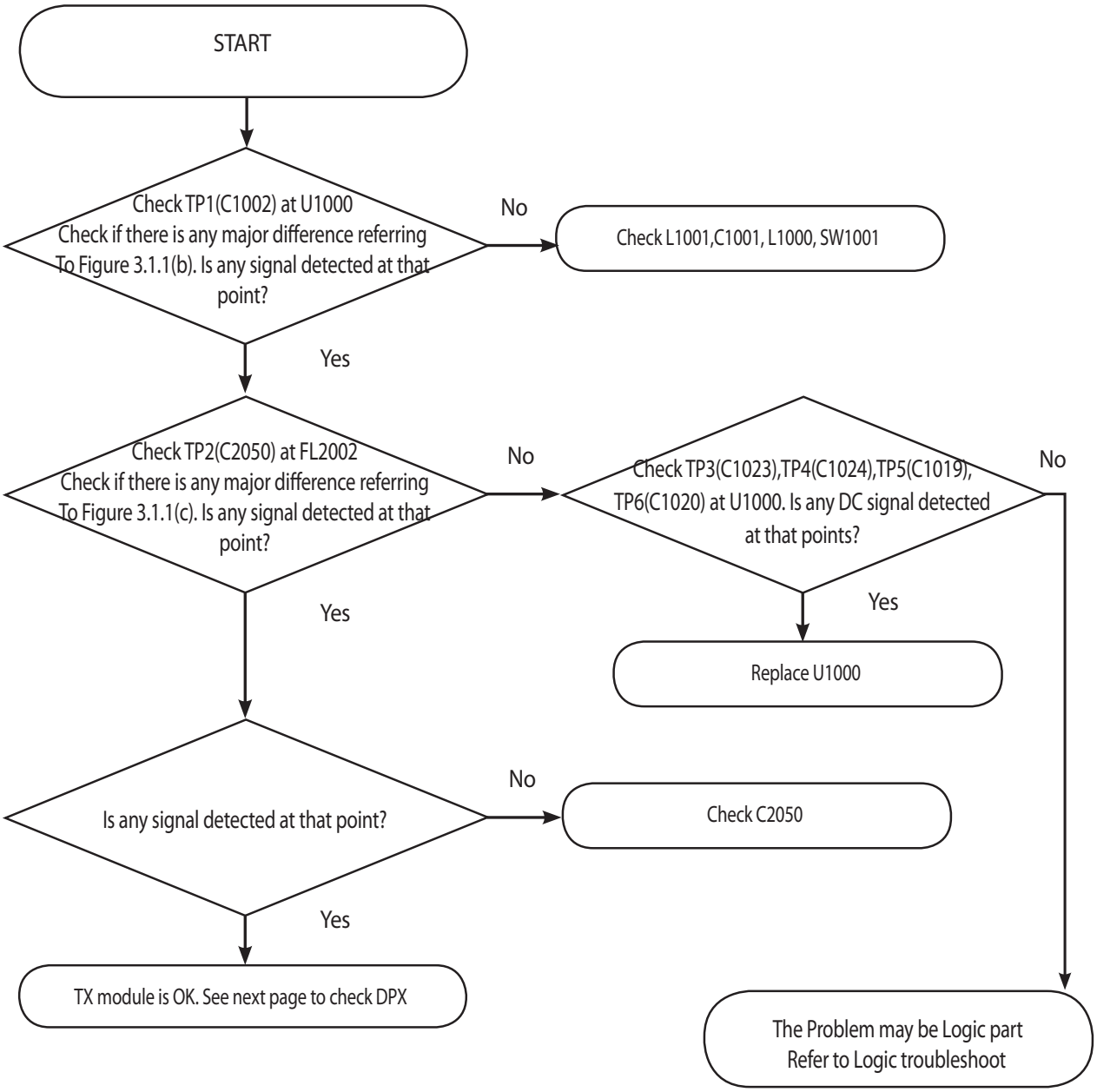

Copyright © 2014 LG Electronics. Inc. All right reserved.
Only for training and service purposes

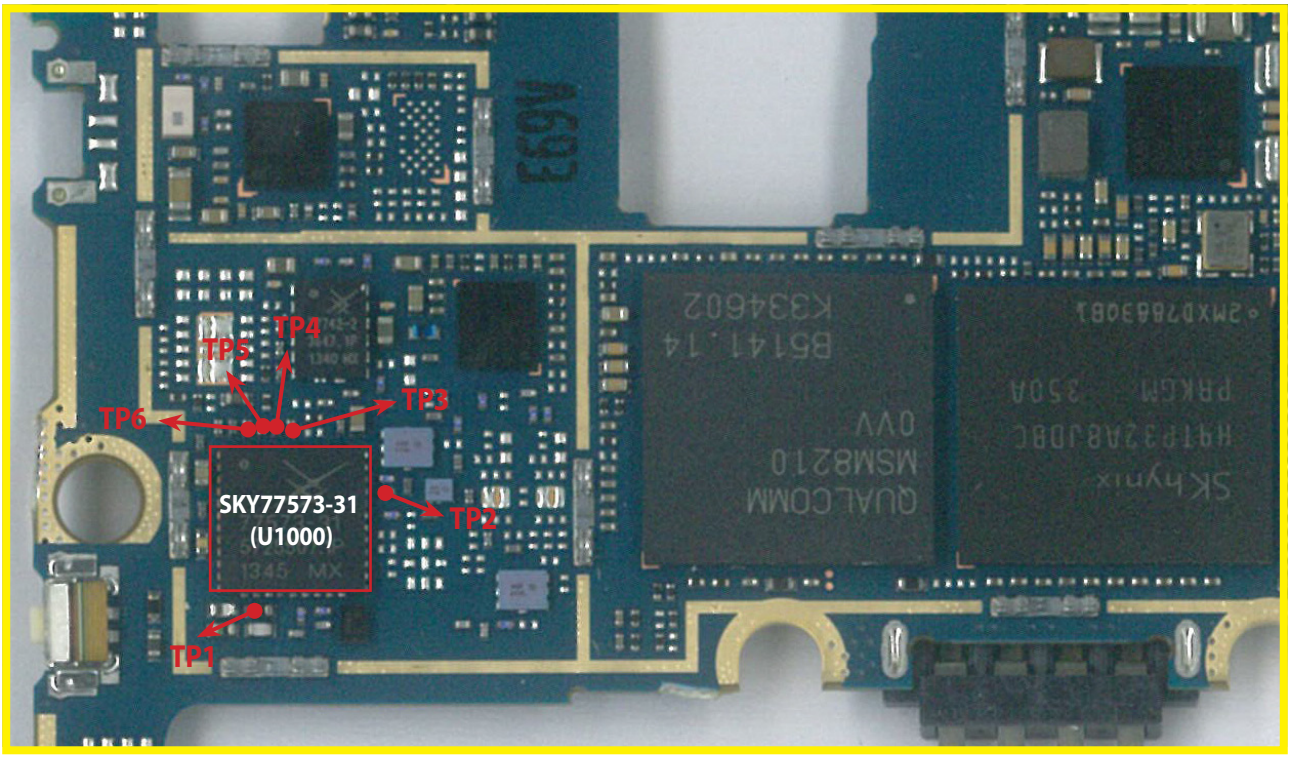

<Main Top>

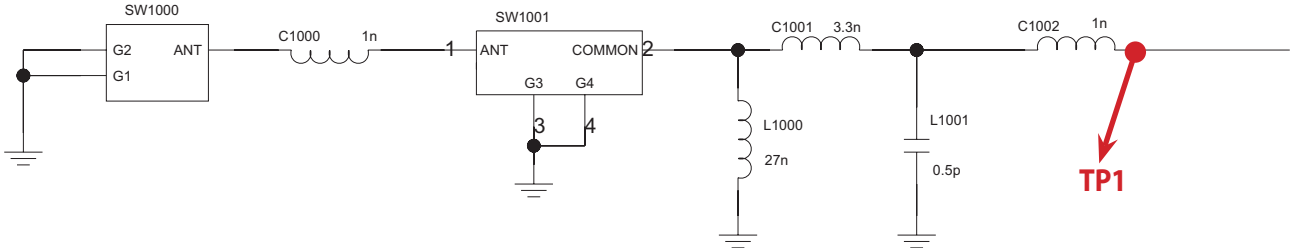

Copyright © 2014 LG Electronics. Inc. All right reserved.
Only for training and service purposes

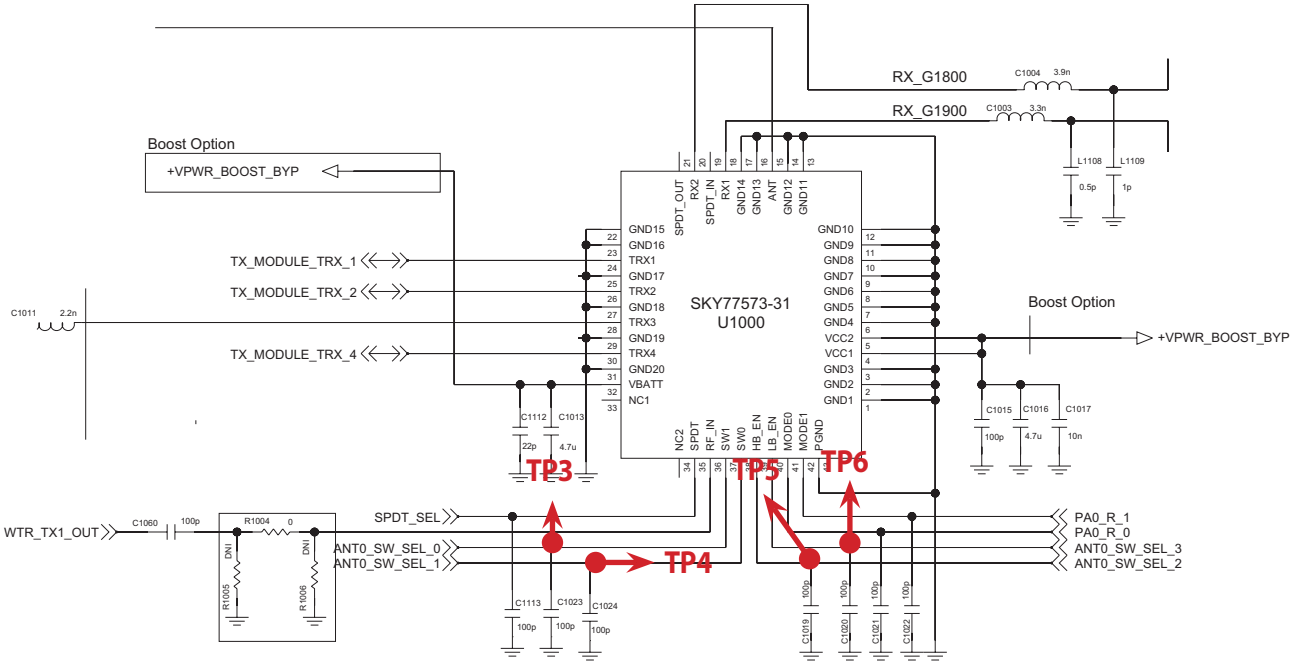

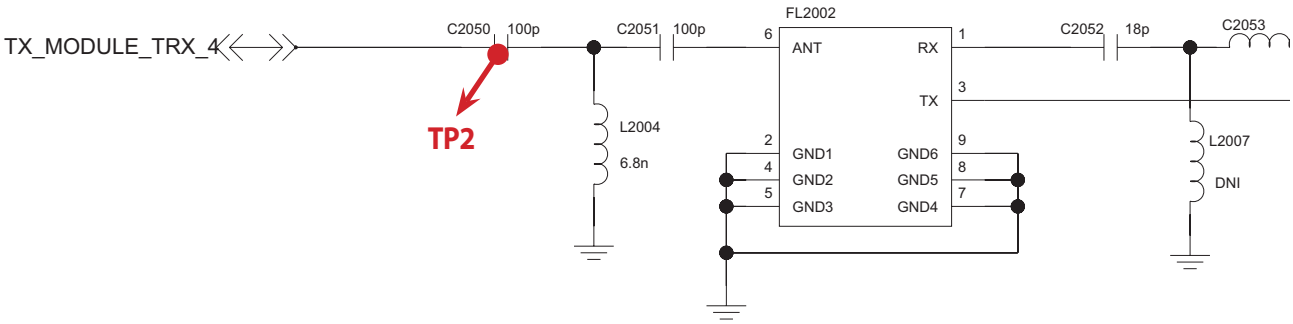

Copyright © 2014 LG Electronics. Inc. All right reserved.
Only for training and service purposes

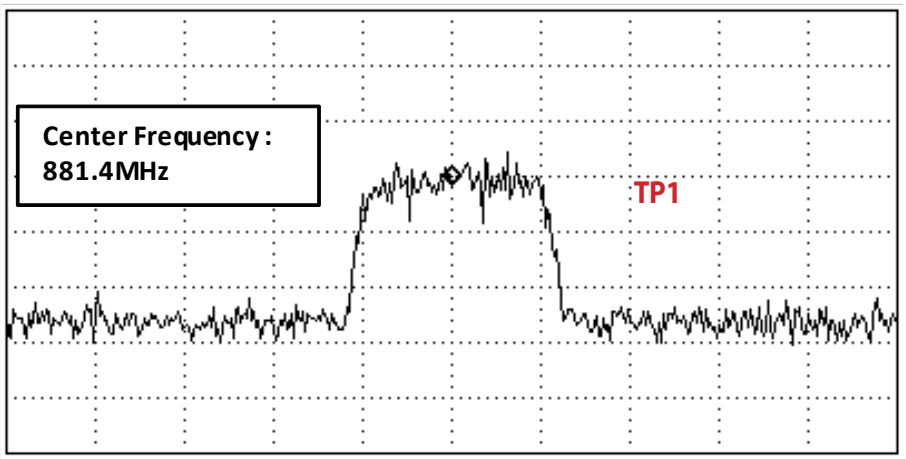

Figure 3.1.1 (b)

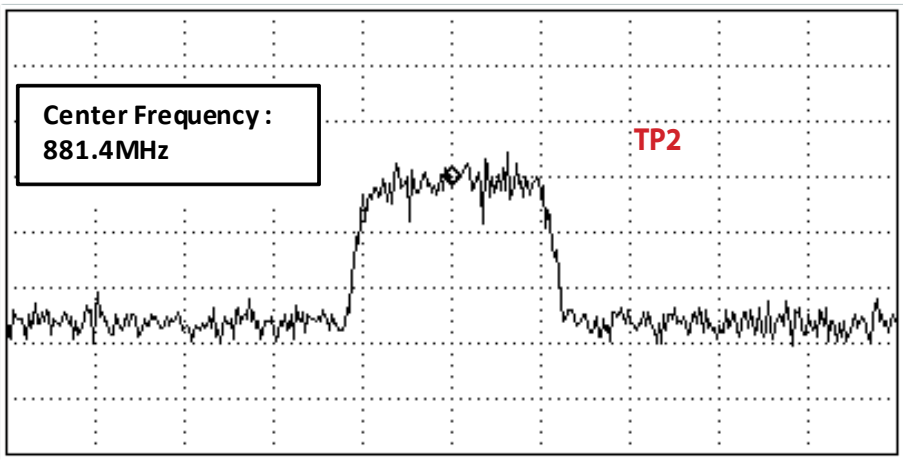

Figure 3.1.1 (c)

Copyright © 2014 LG Electronics. Inc. All right reserved.
Only for training and service purposes

3.1.2.4 Checking RF signal path (FEM)

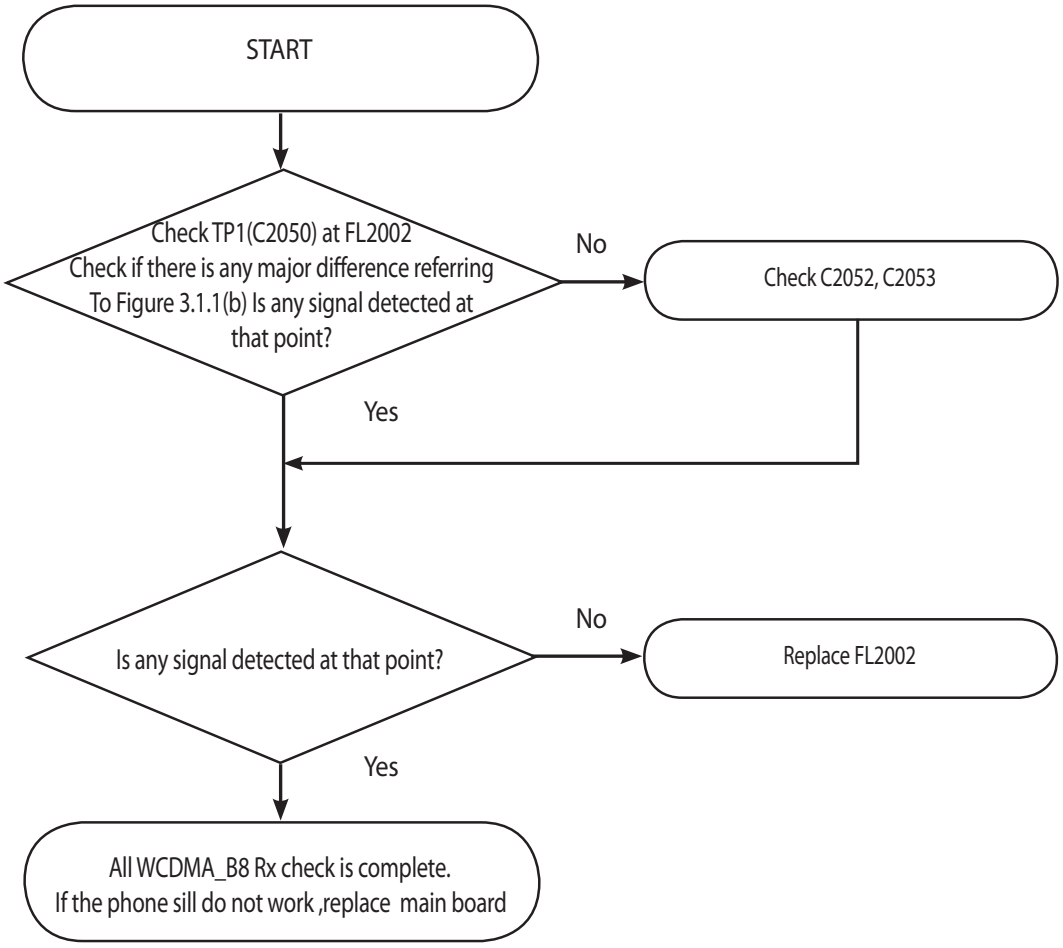

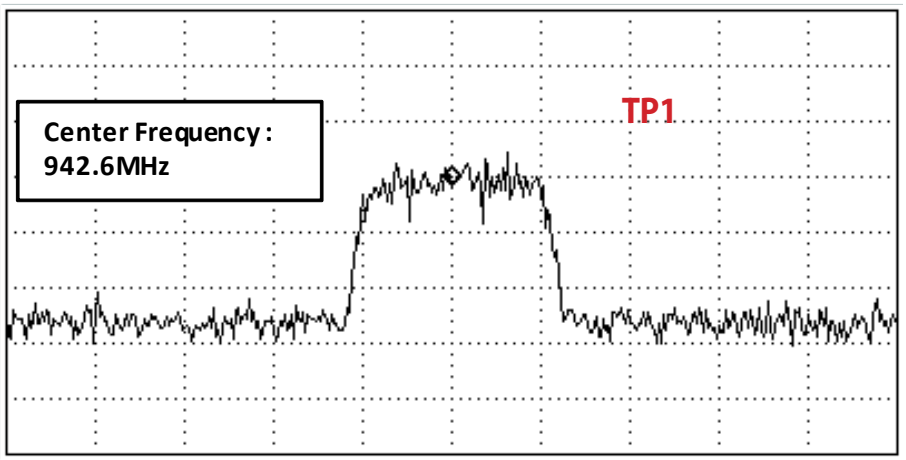

Figure 3.1.1 (b)

Copyright © 2014 LG Electronics. Inc. All right reserved.
Only for training and service purposes

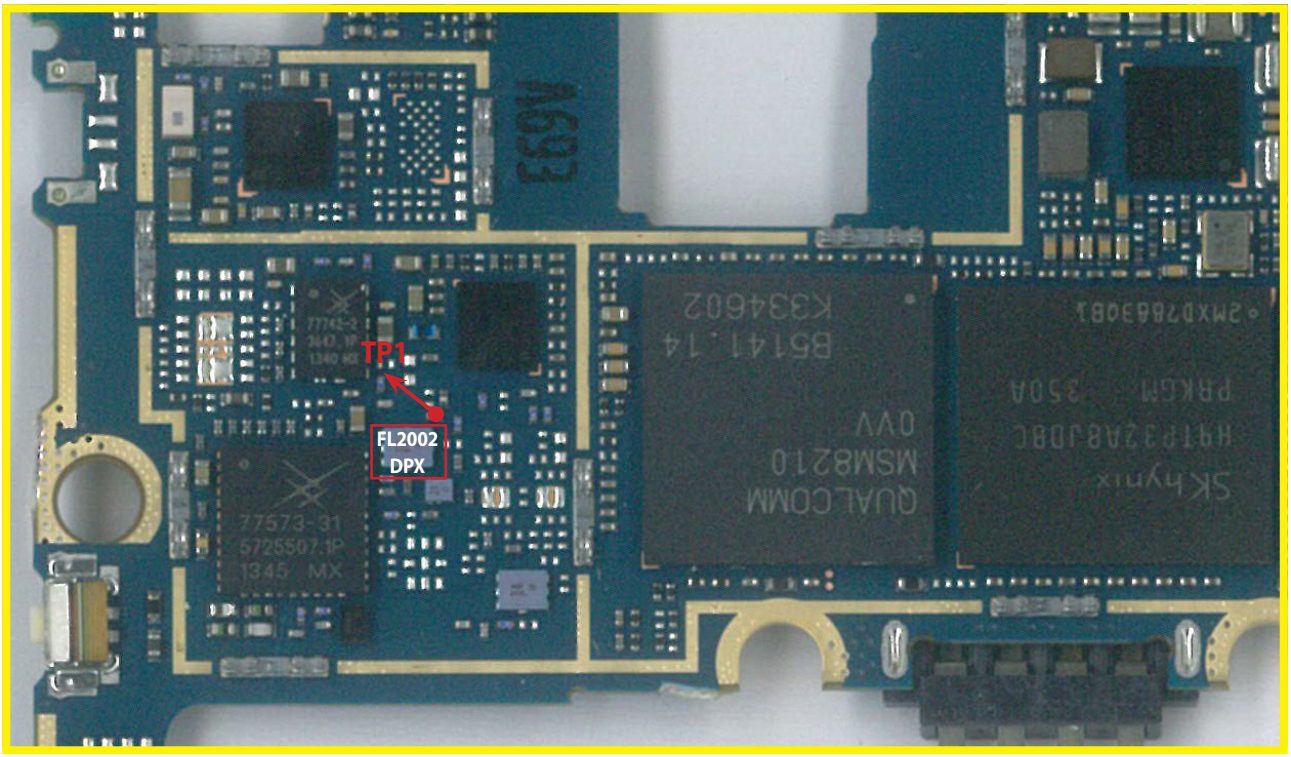

<Main Top>

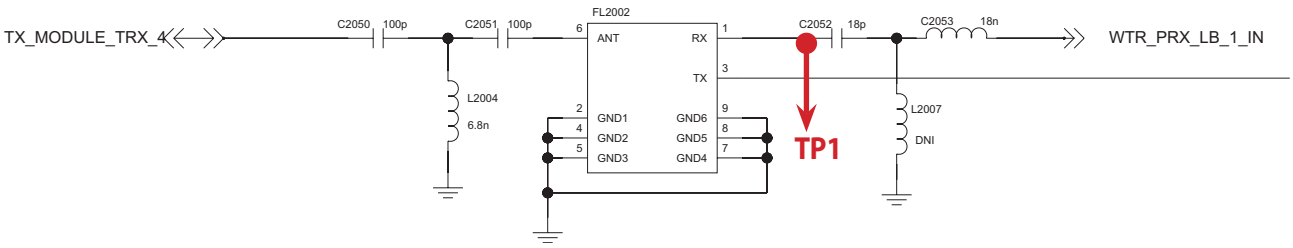

Copyright © 2014 LG Electronics. Inc. All right reserved.
Only for training and service purposes

3.2 WCDMA Tx Part Trouble

3.2.1 WCDMA_B1 Tx

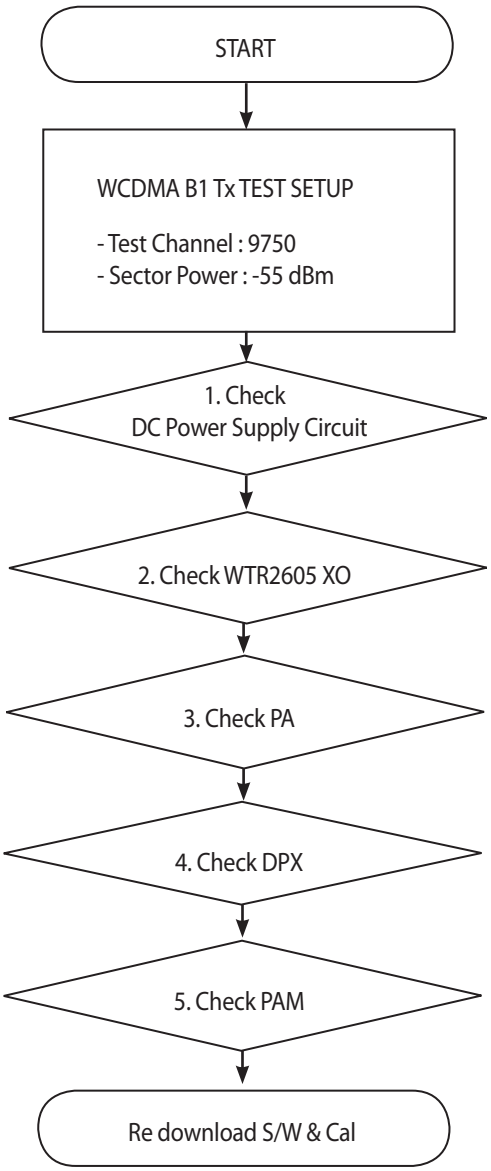

* There are no Test Points on the IQ Data Line. So It is impossible to check the IQ Data Wave form

Copyright © 2014 LG Electronics. Inc. All right reserved.
Only for training and service purposes

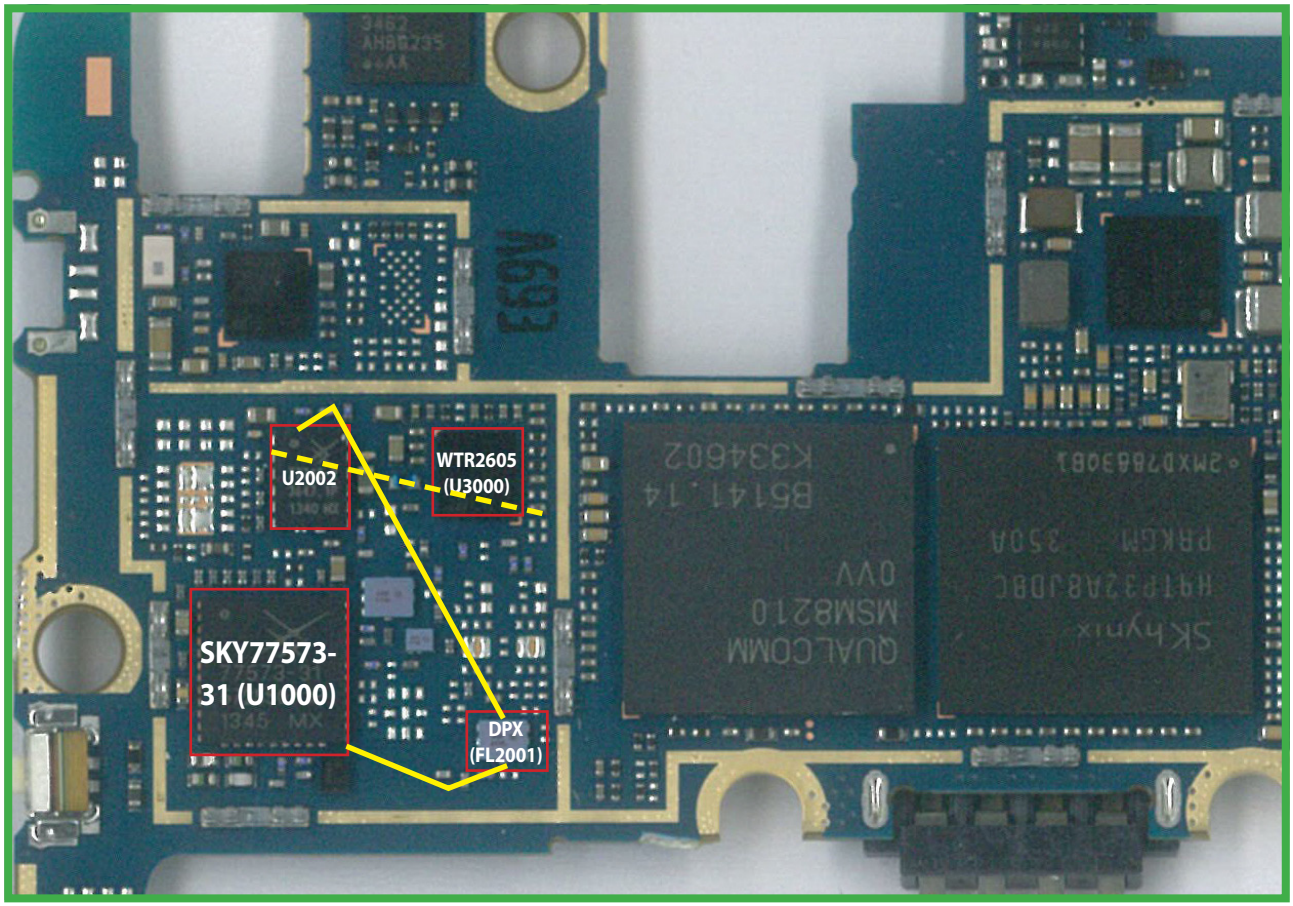

<Main Top>

Copyright © 2014 LG Electronics. Inc. All right reserved.
Only for training and service purposes

3.2.1.1 Checking DC Power supply circuit

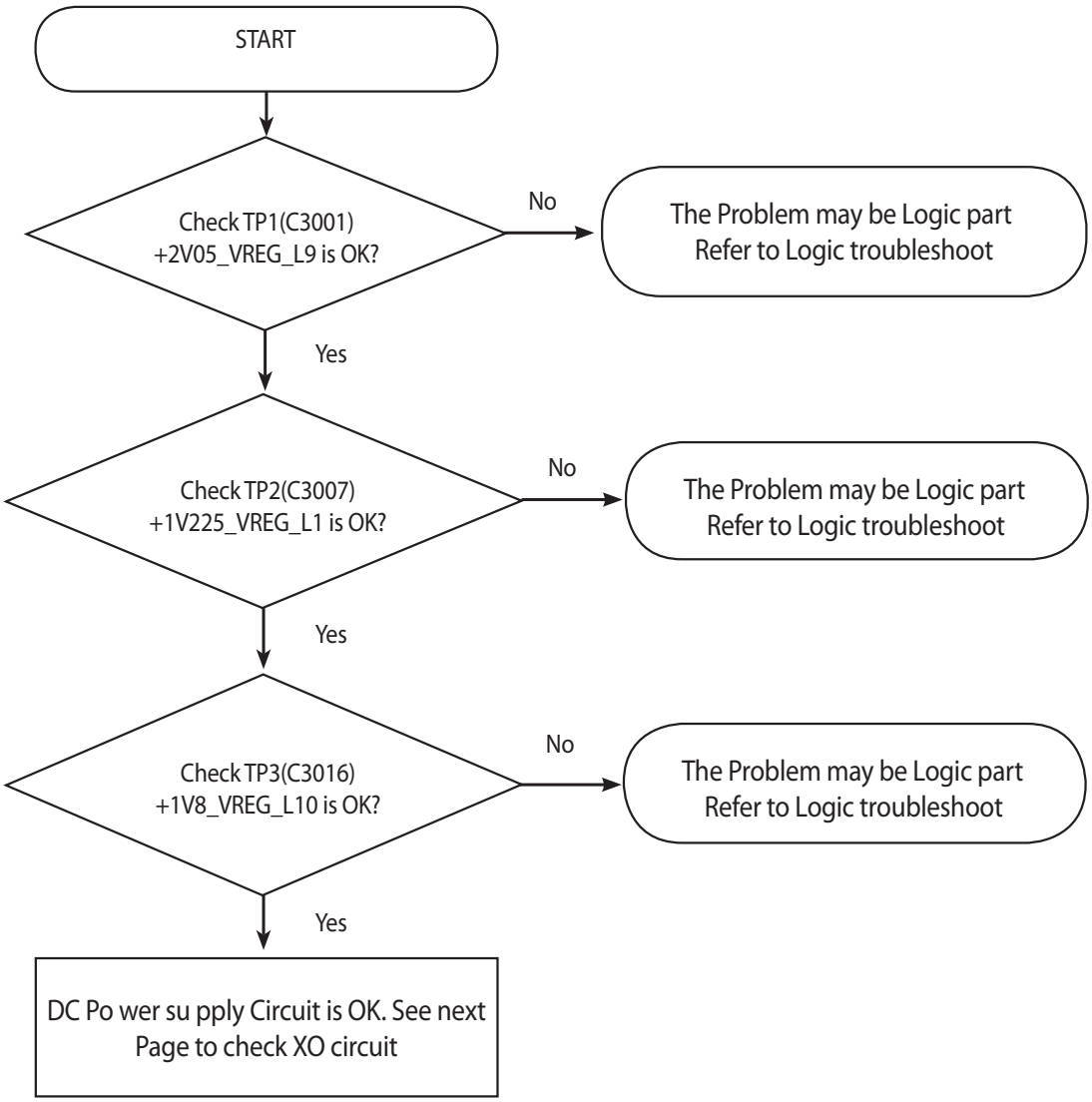

Copyright © 2014 LG Electronics. Inc. All right reserved.
Only for training and service purposes

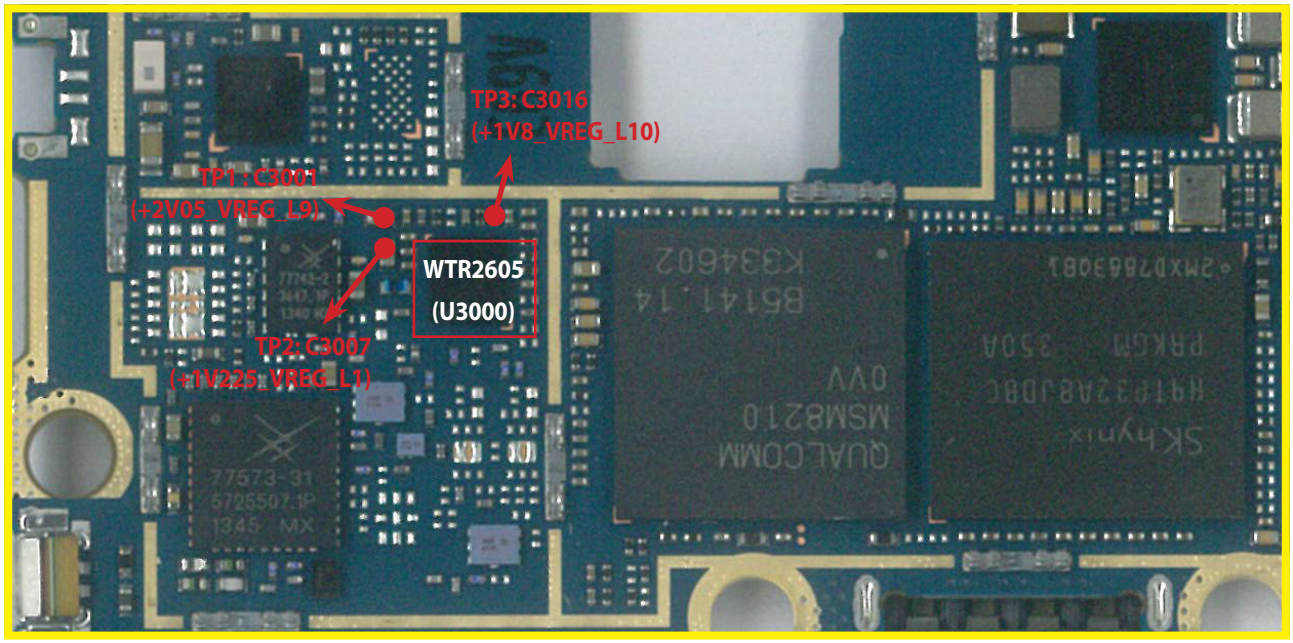

<Main Top>

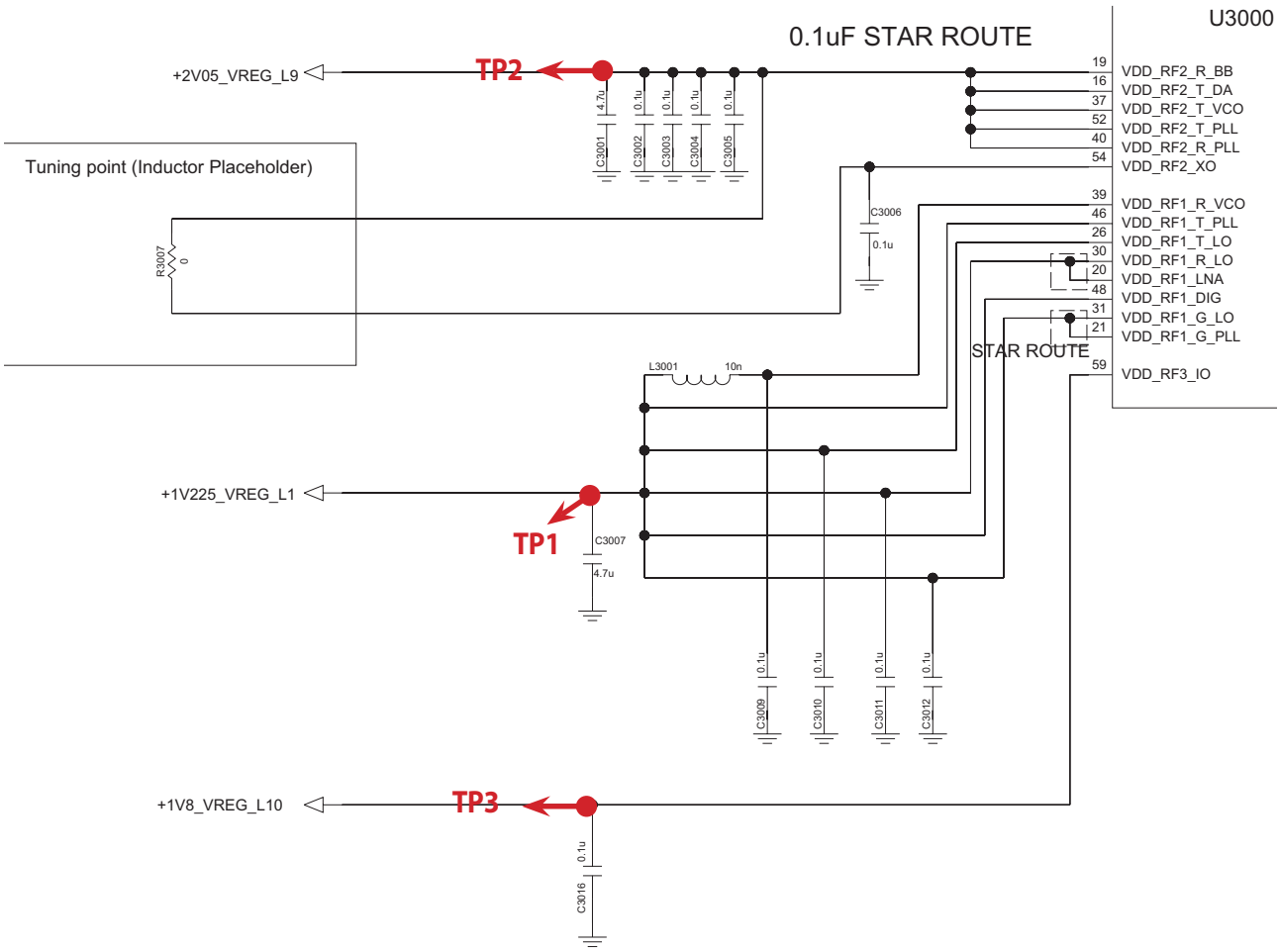

Copyright © 2014 LG Electronics. Inc. All right reserved.
Only for training and service purposes

3.2.1.2 Checking WTR6205 XO circuit

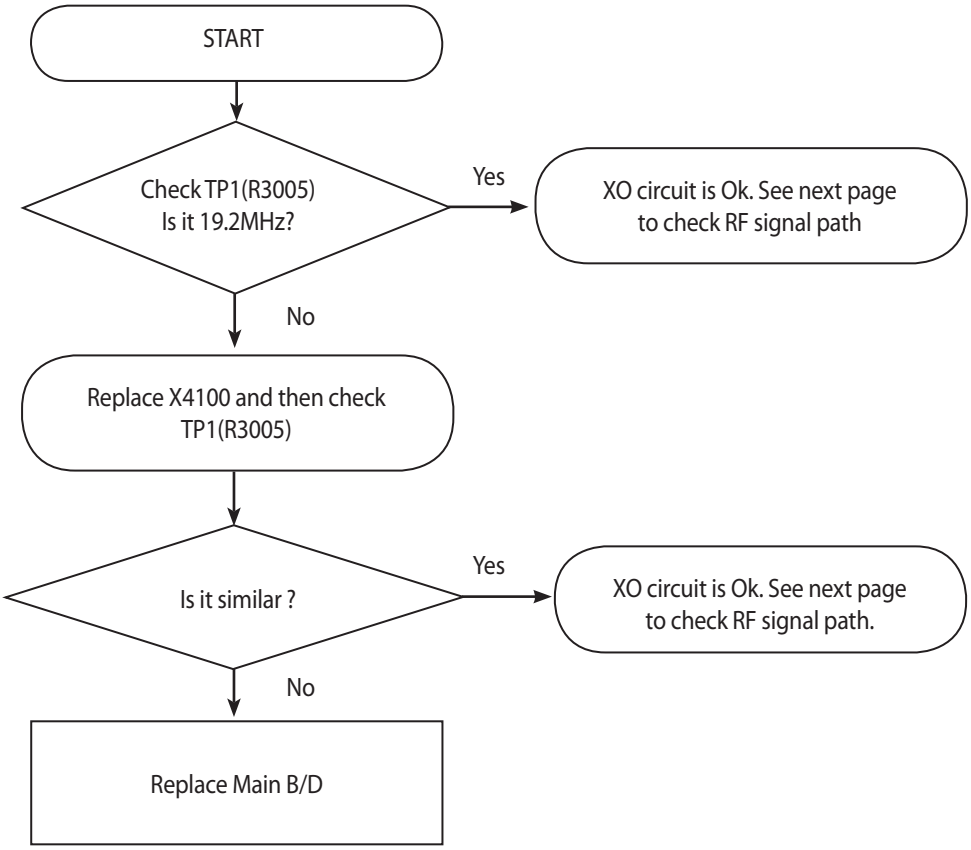

Copyright © 2014 LG Electronics. Inc. All right reserved.
Only for training and service purposes

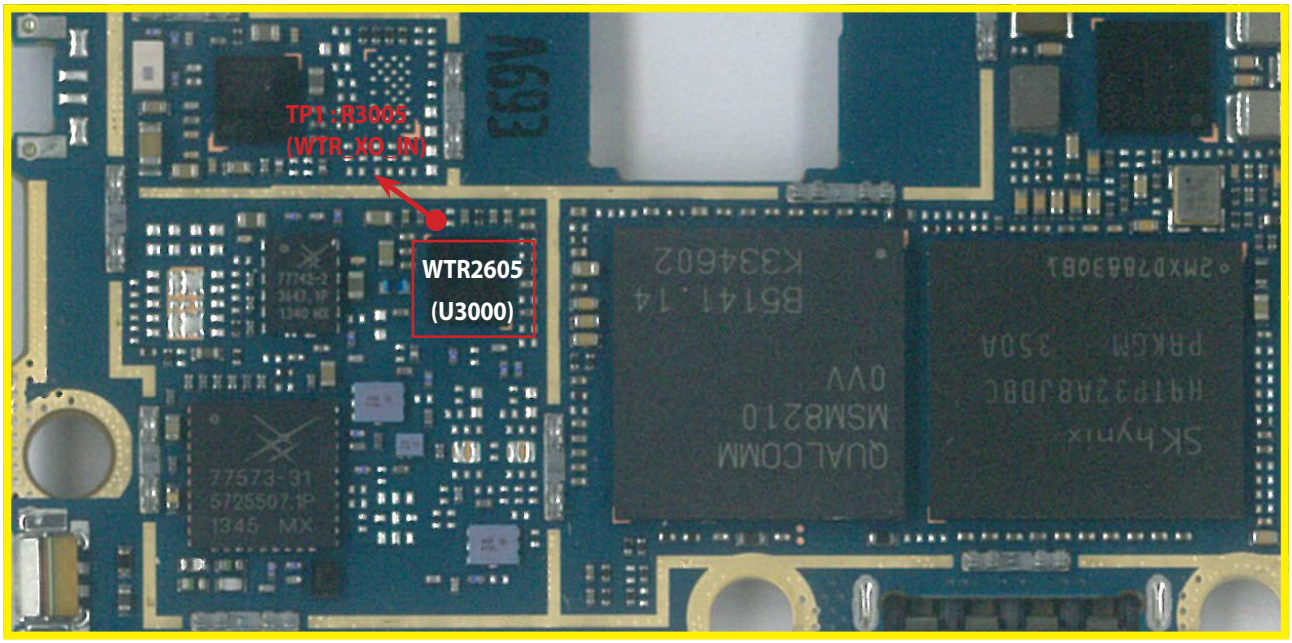

<Main Top>

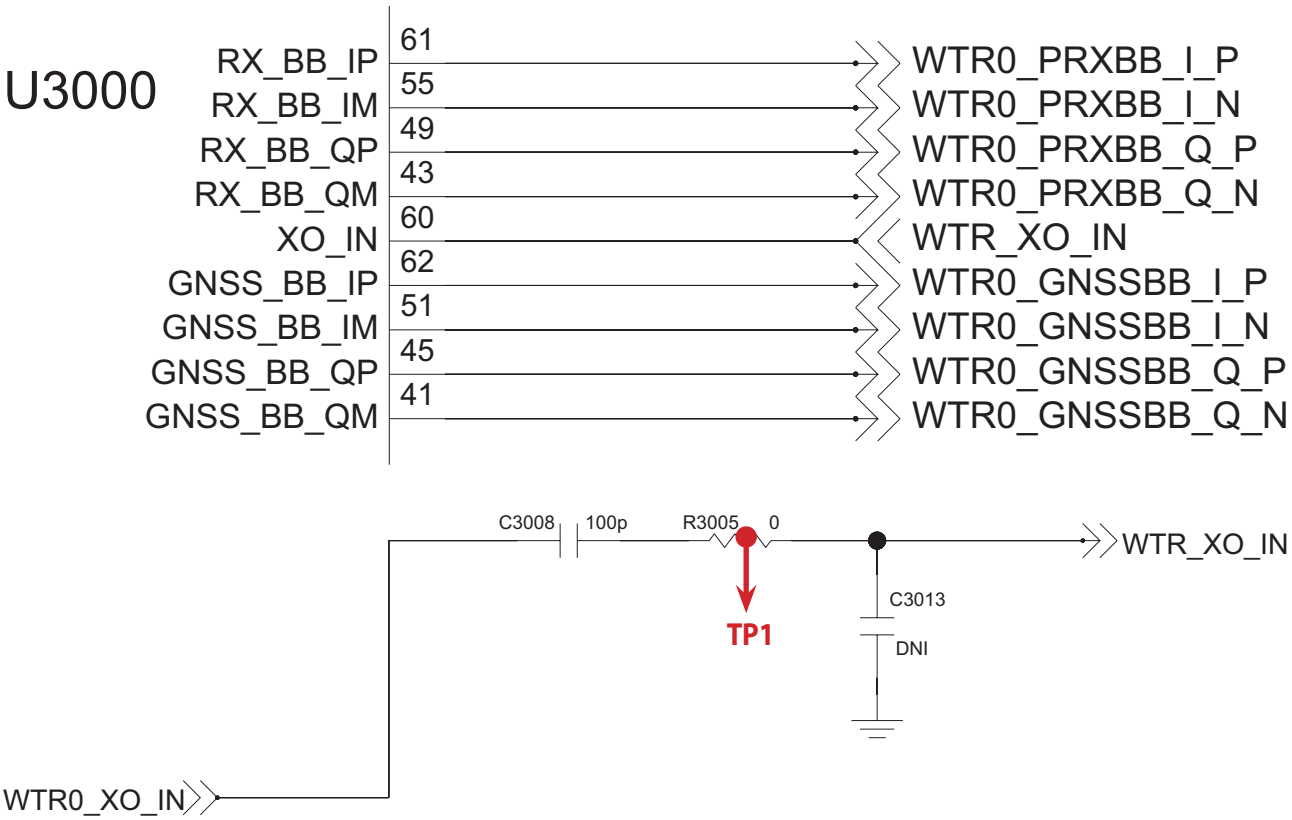

Copyright © 2014 LG Electronics. Inc. All right reserved.
Only for training and service purposes

3.2.1.3 Checking B1 TX PA

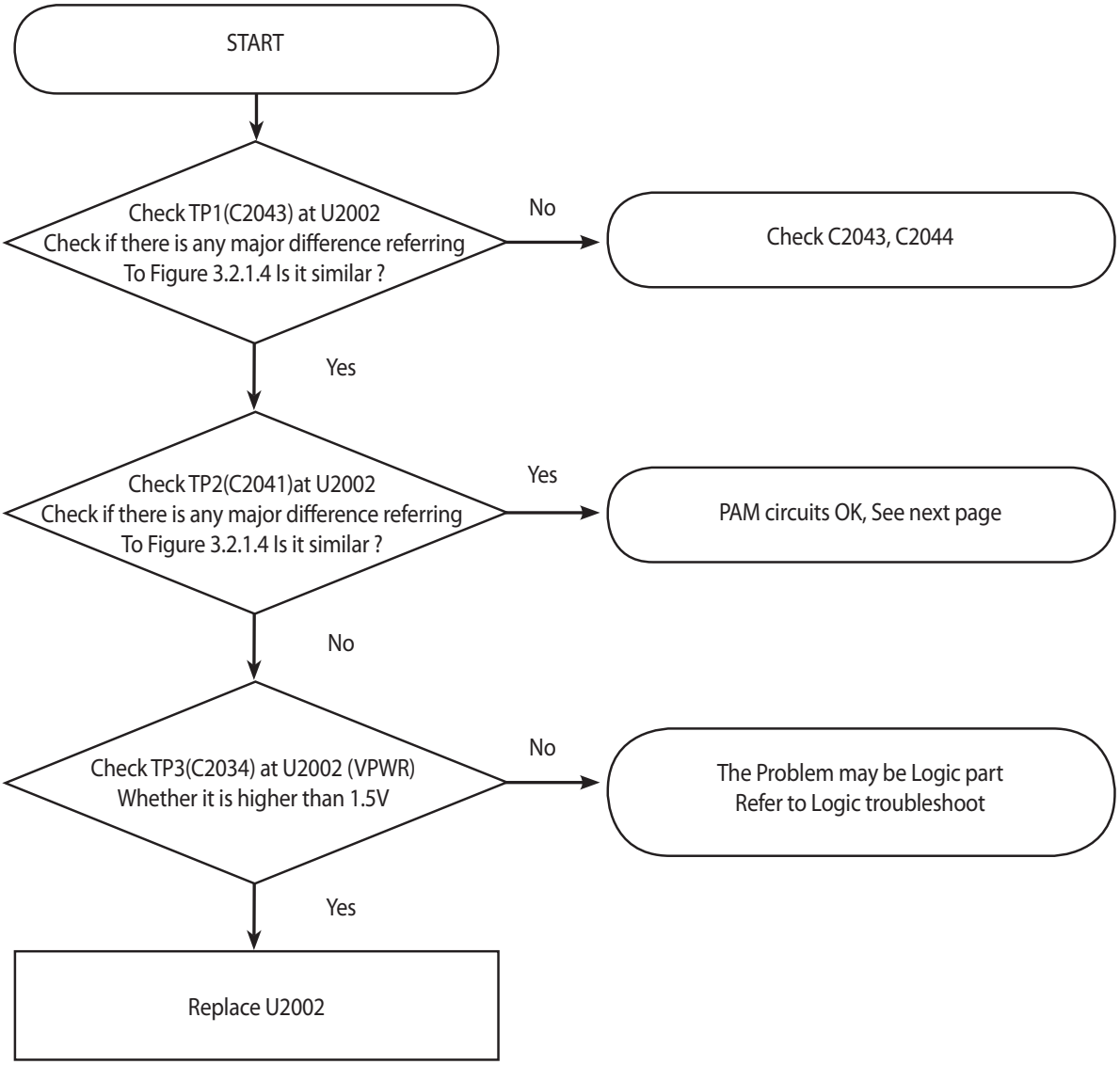

Copyright © 2014 LG Electronics. Inc. All right reserved.
Only for training and service purposes

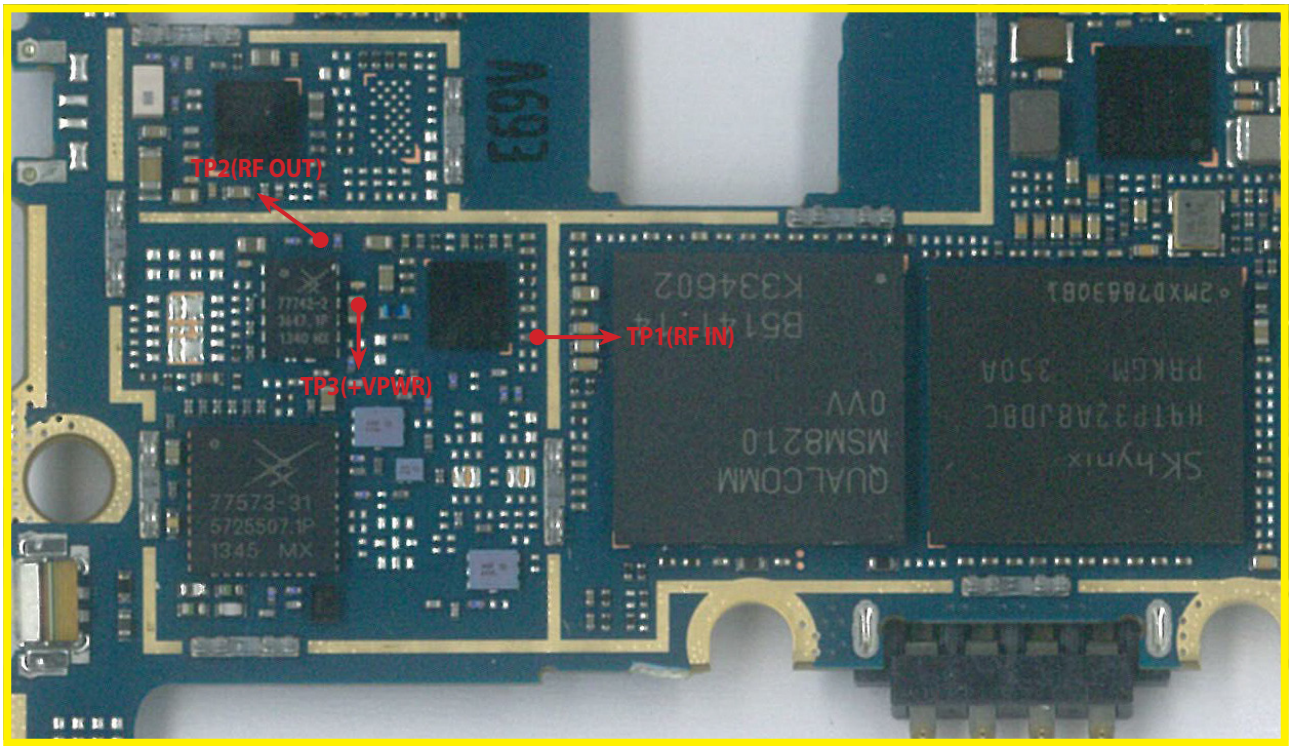

<Main Top>

Copyright © 2014 LG Electronics. Inc. All right reserved.
Only for training and service purposes

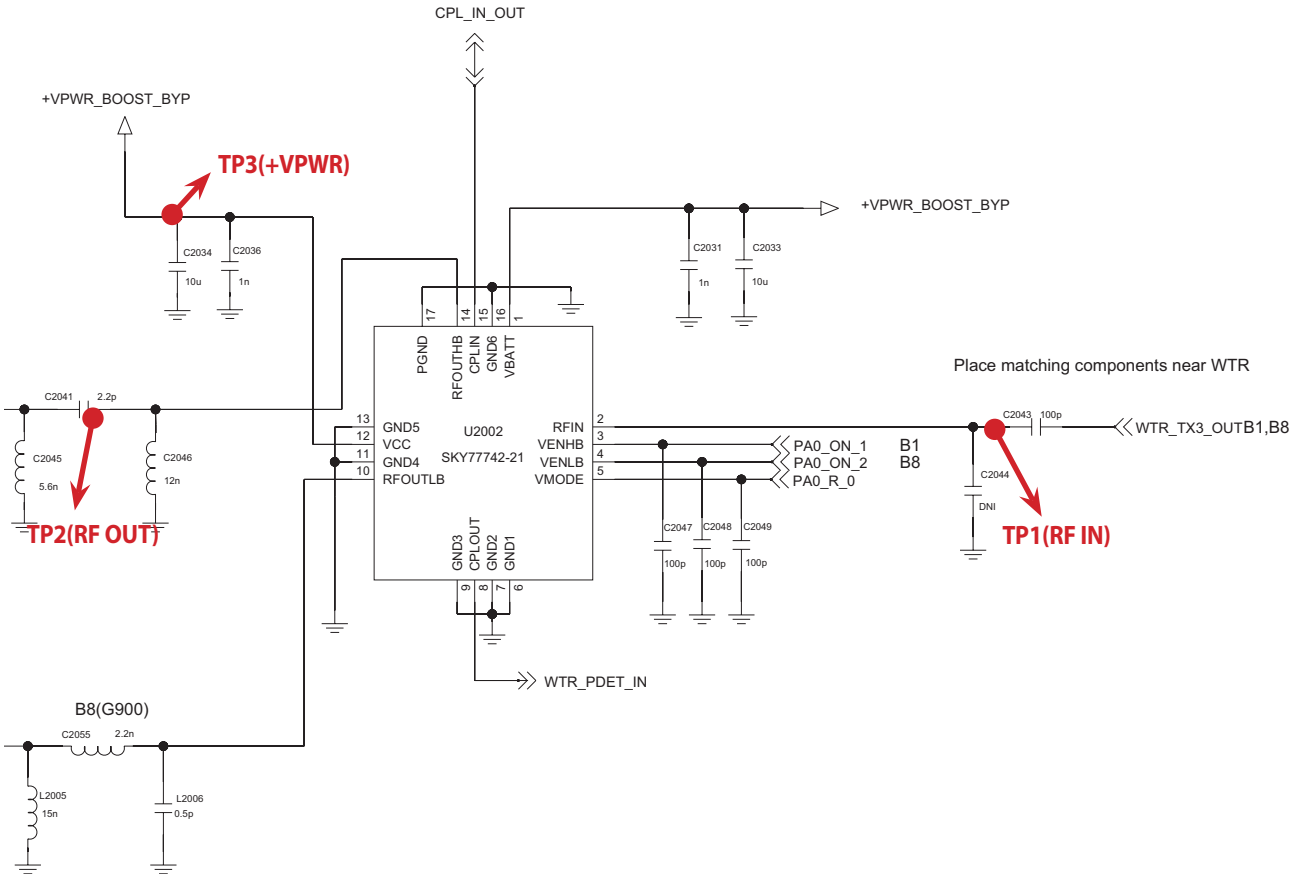

Copyright © 2014 LG Electronics. Inc. All right reserved.
Only for training and service purposes

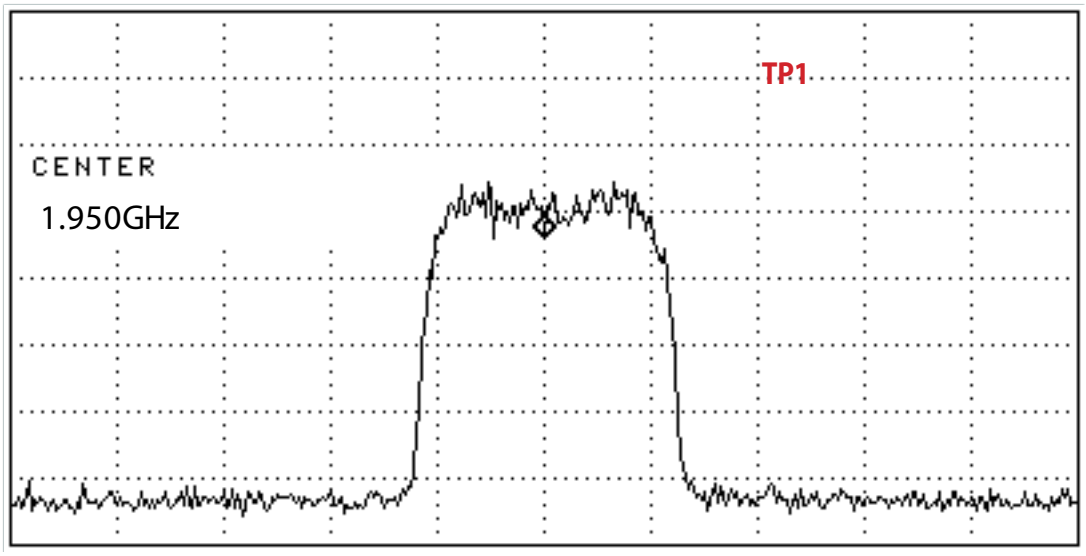

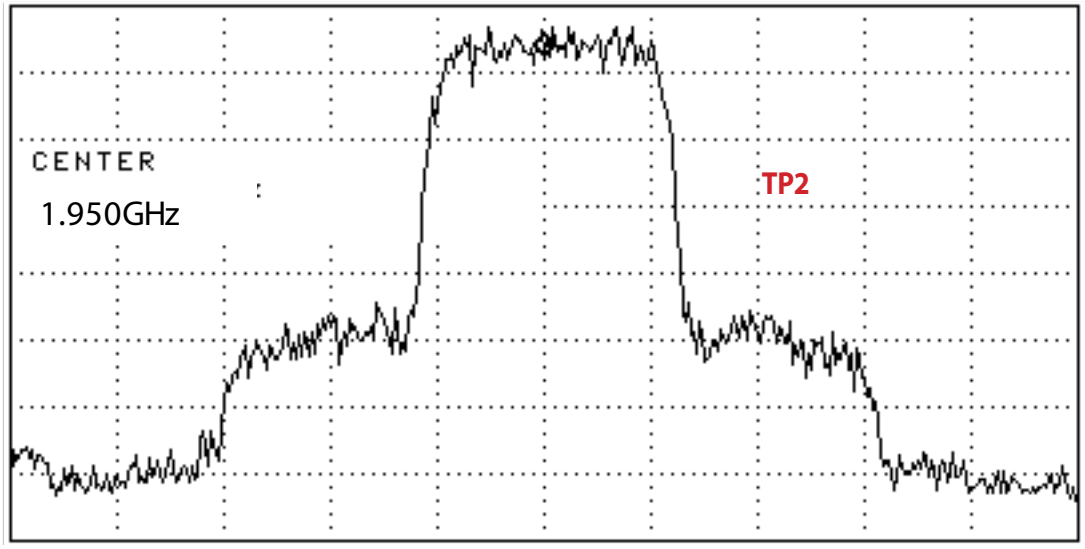

Figure 3.2.1.4

Copyright © 2014 LG Electronics. Inc. All right reserved.
Only for training and service purposes

3.2.1.4 Checking RF signal path (DPX)

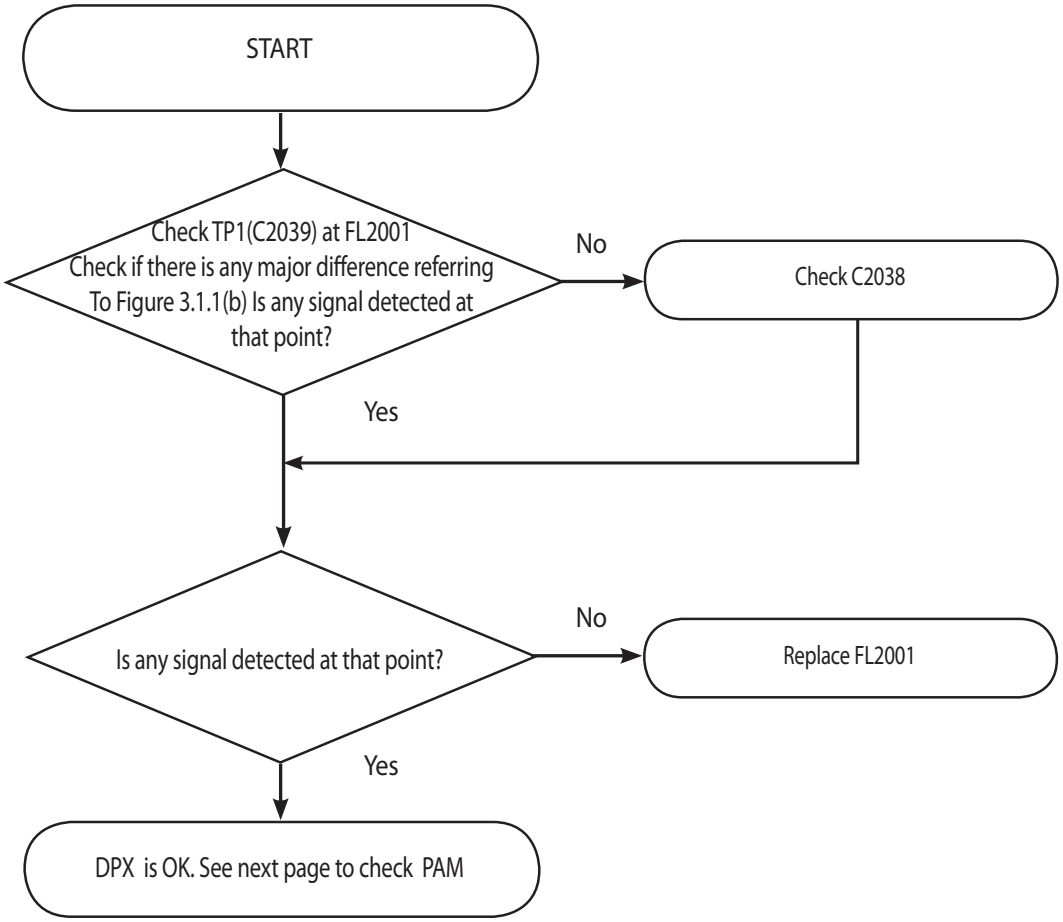

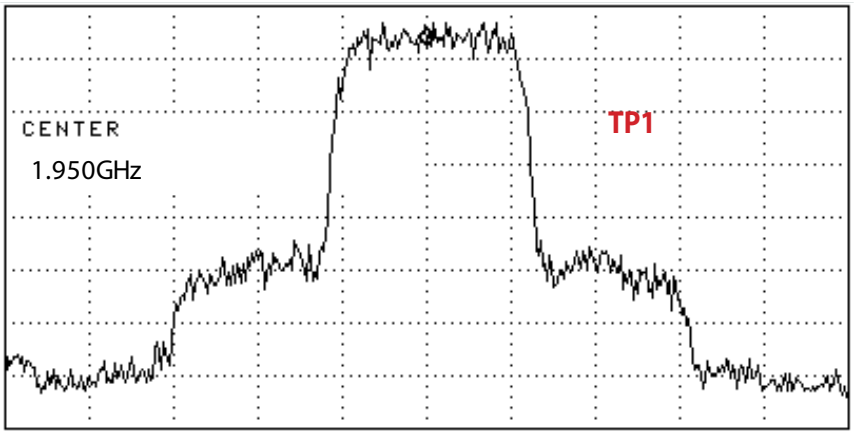

Figure 3.1.1 (b)

Copyright © 2014 LG Electronics. Inc. All right reserved.
Only for training and service purposes

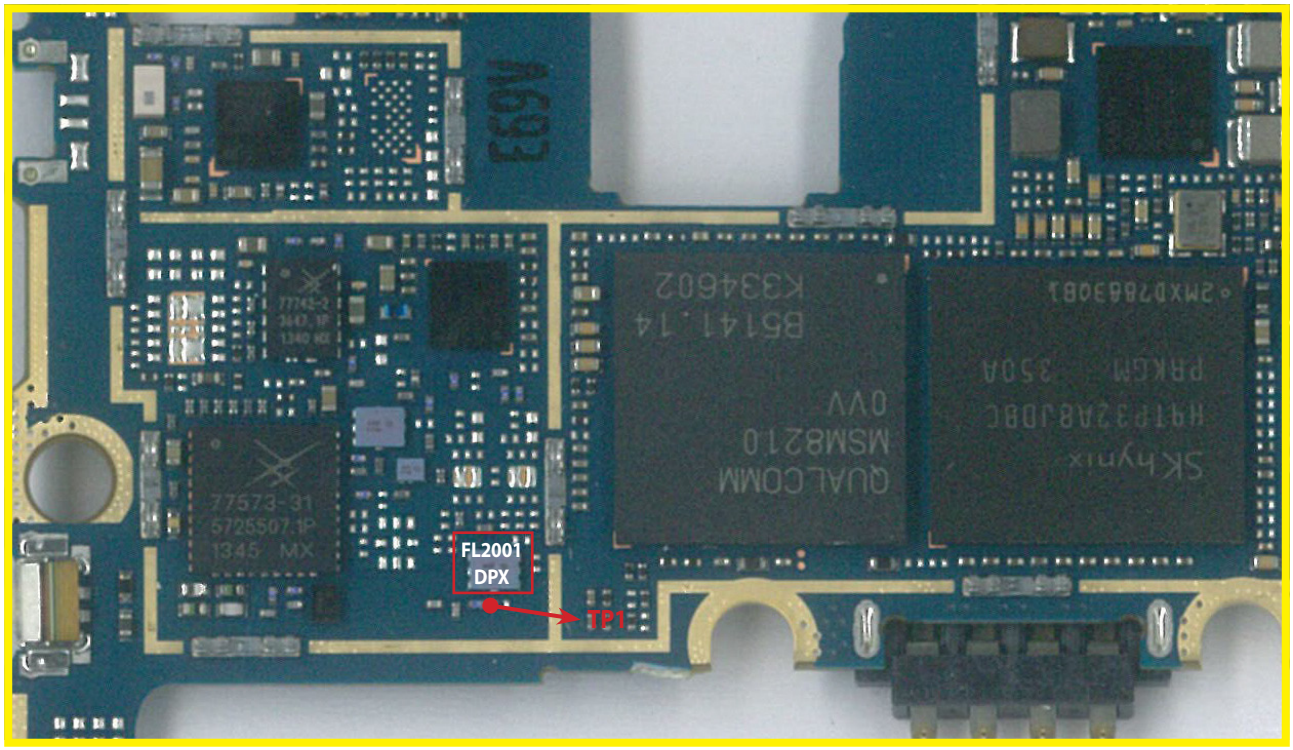

<Main Top>

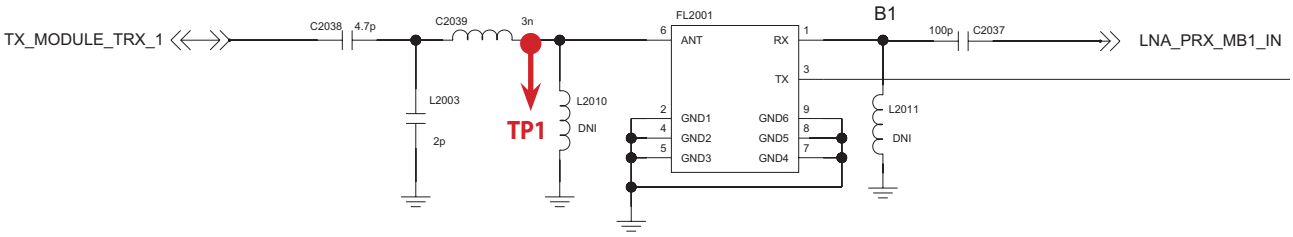

Copyright © 2014 LG Electronics. Inc. All right reserved.
Only for training and service purposes

3.2.1.5 Checking RF signal path (Tx Module)

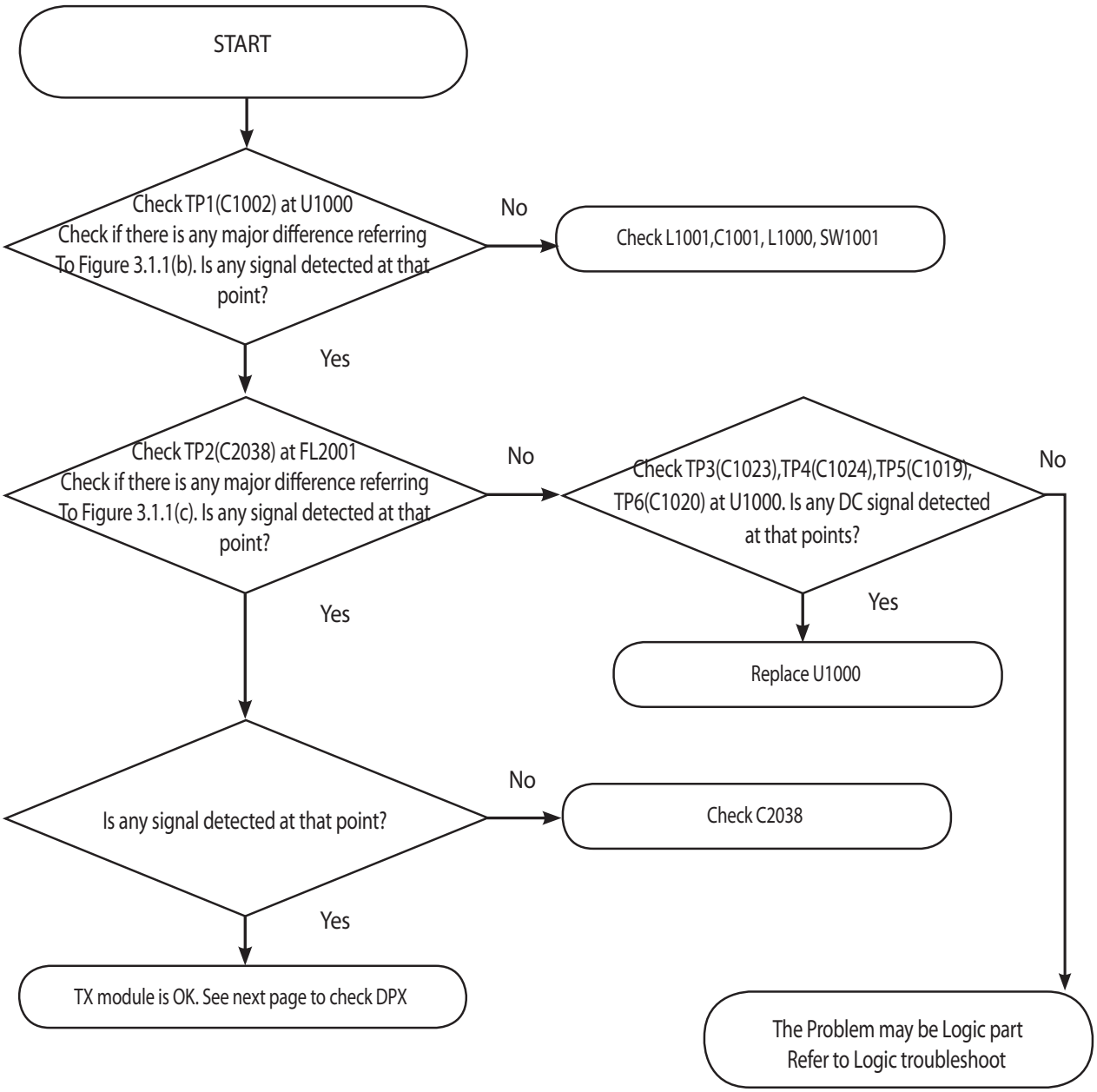

Copyright © 2014 LG Electronics. Inc. All right reserved.
Only for training and service purposes

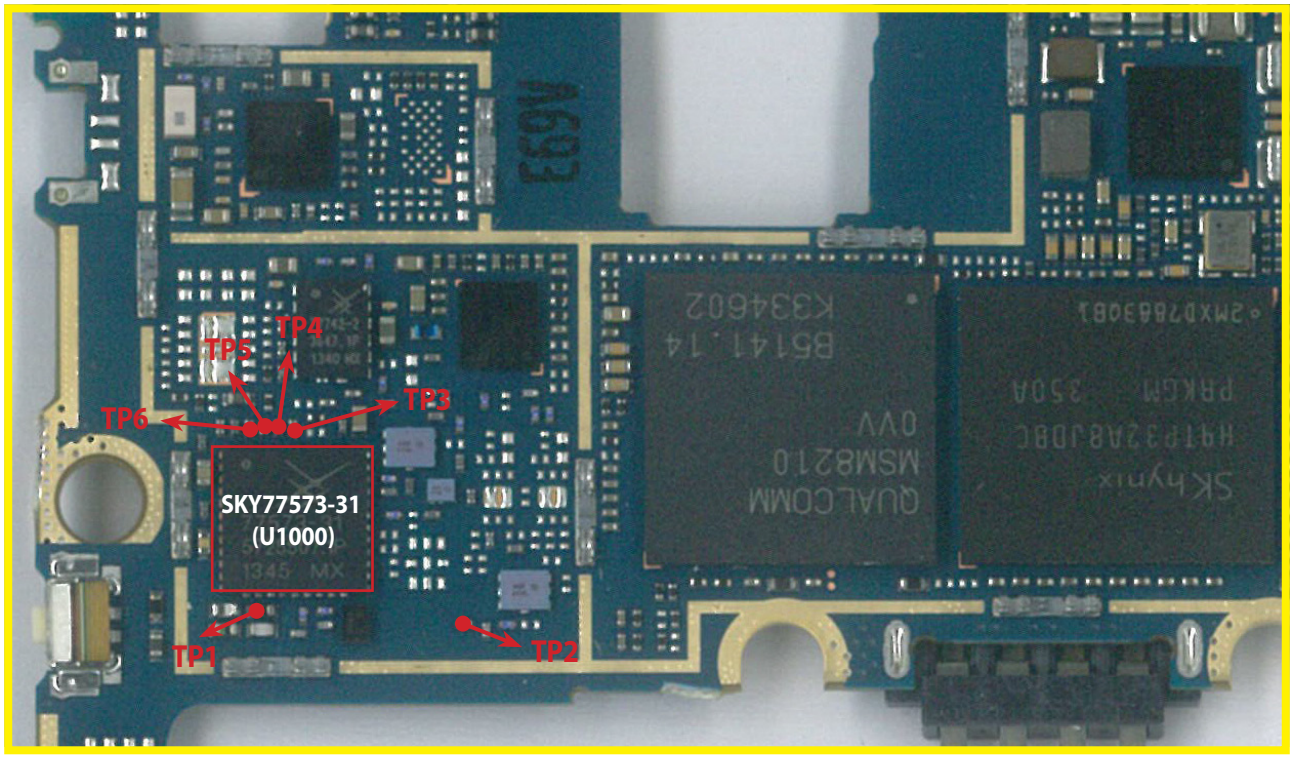

<Main Top>

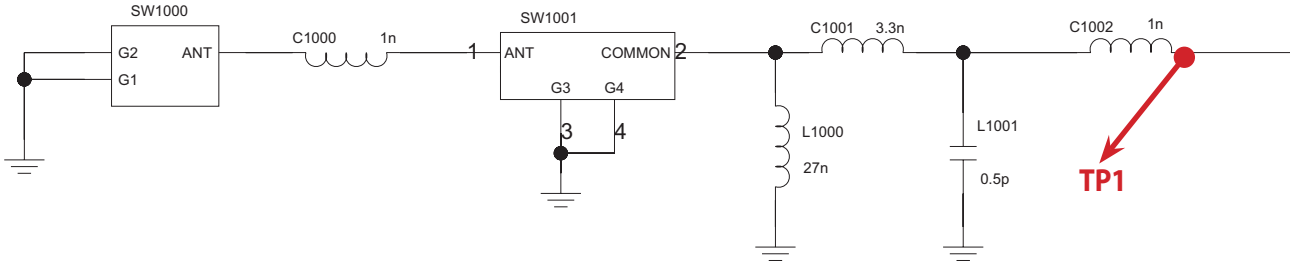

Copyright © 2014 LG Electronics. Inc. All right reserved.
Only for training and service purposes

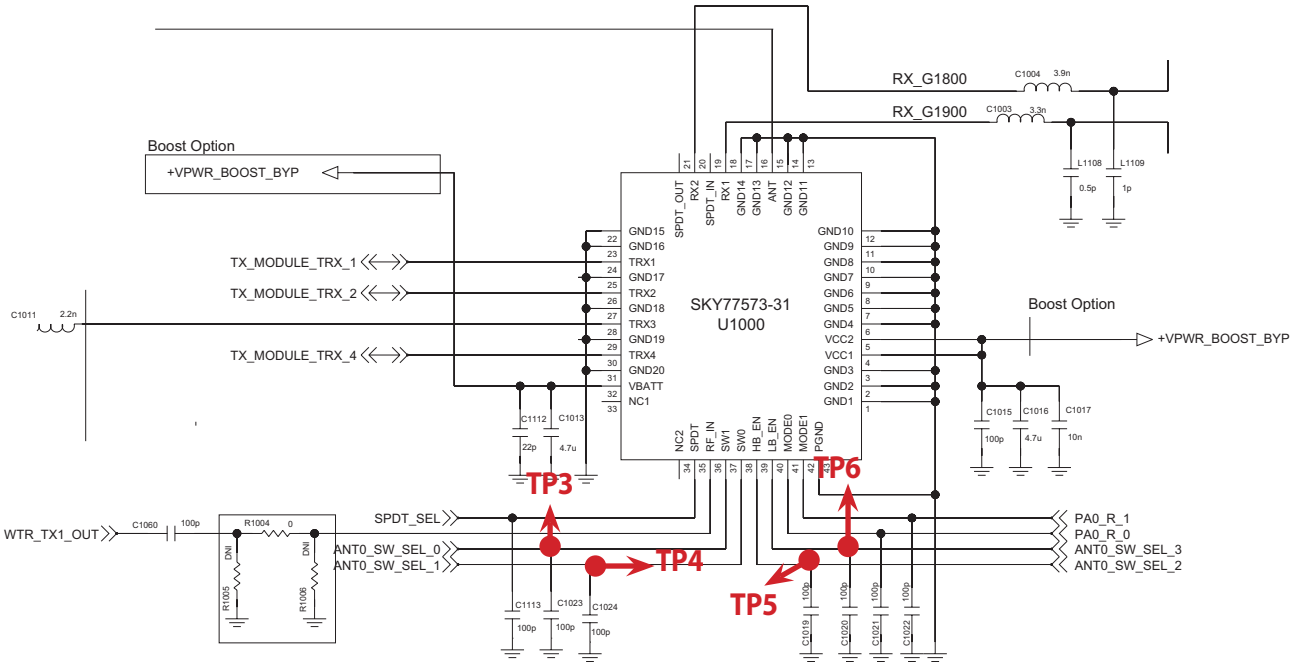

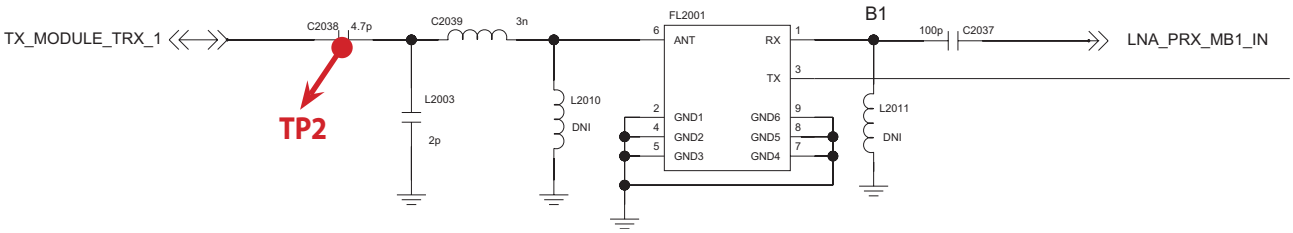

Copyright © 2014 LG Electronics. Inc. All right reserved.
Only for training and service purposes

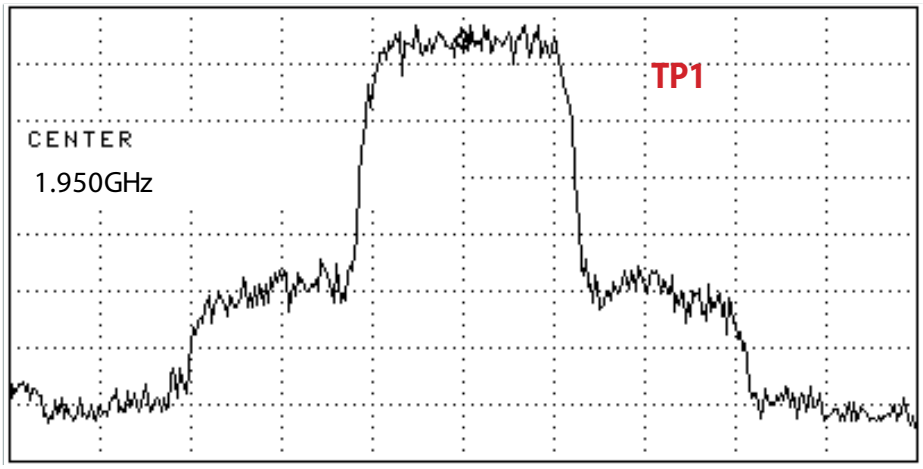

Figure 3.1.1 (b)

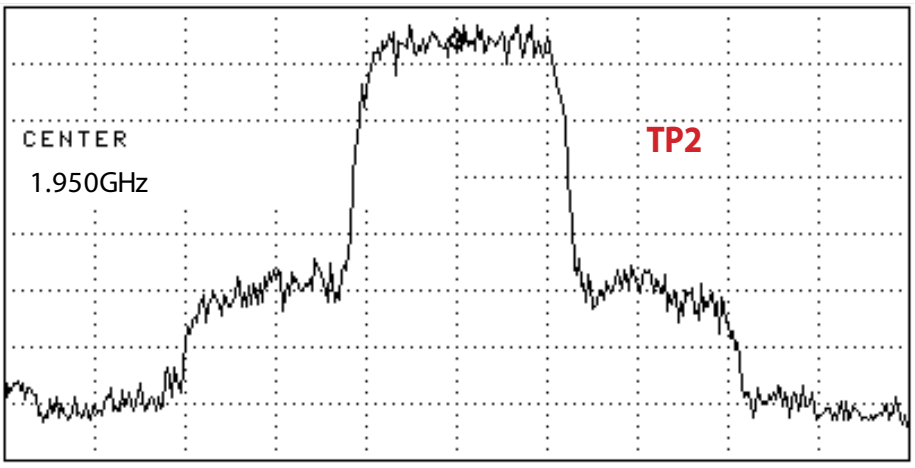

Figure 3.1.1 (c)

Copyright © 2014 LG Electronics. Inc. All right reserved.
Only for training and service purposes

3.2.2 WCDMA_B8 Tx

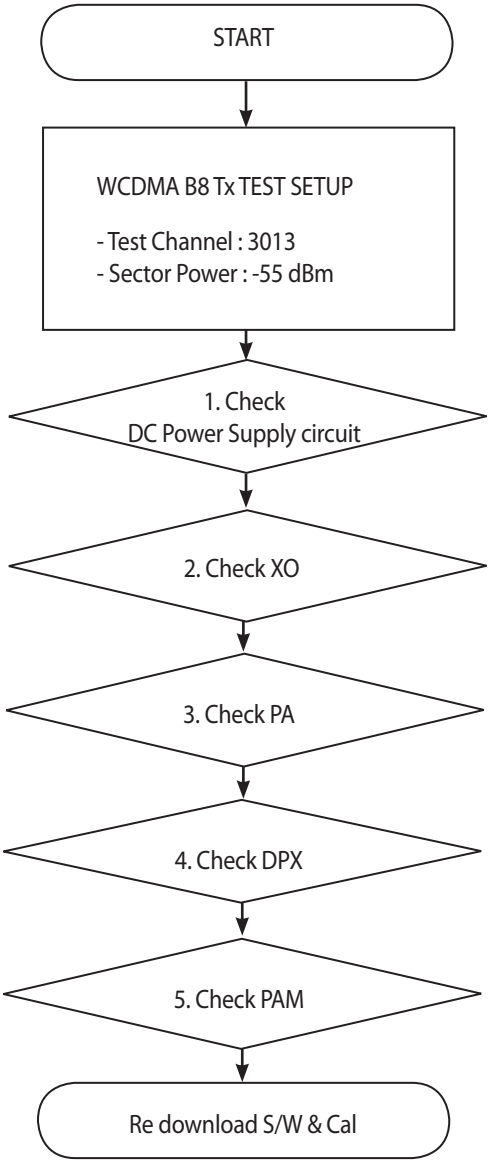

* There are no Test Points on the IQ Data Line. So It is impossible to check the IQ Data Wave form

Copyright © 2014 LG Electronics. Inc. All right reserved.
Only for training and service purposes

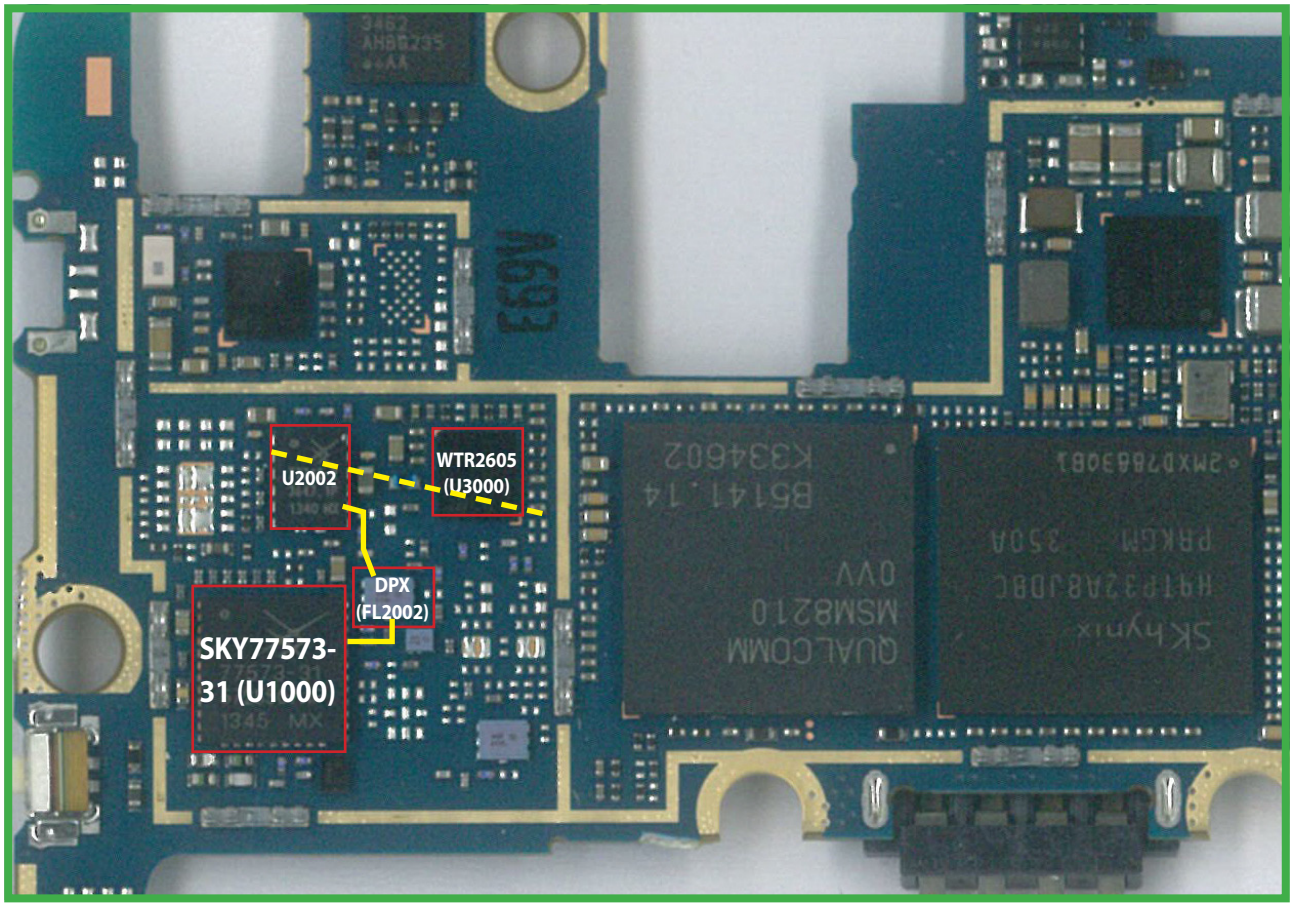

<Main Top>

Copyright © 2014 LG Electronics. Inc. All right reserved.
Only for training and service purposes

3.2.2.1 Checking DC Power supply circuit

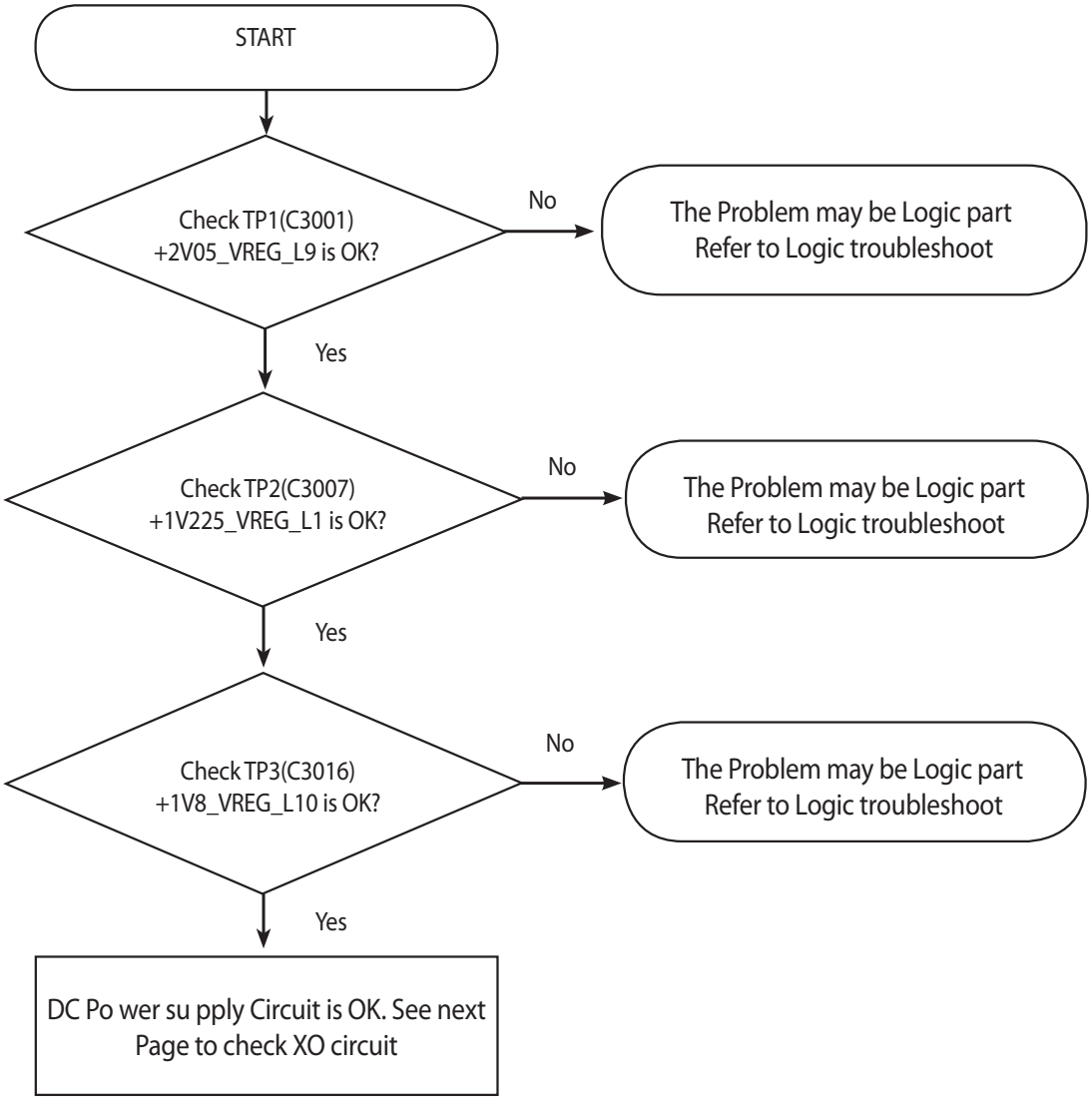

Copyright © 2014 LG Electronics. Inc. All right reserved.
Only for training and service purposes

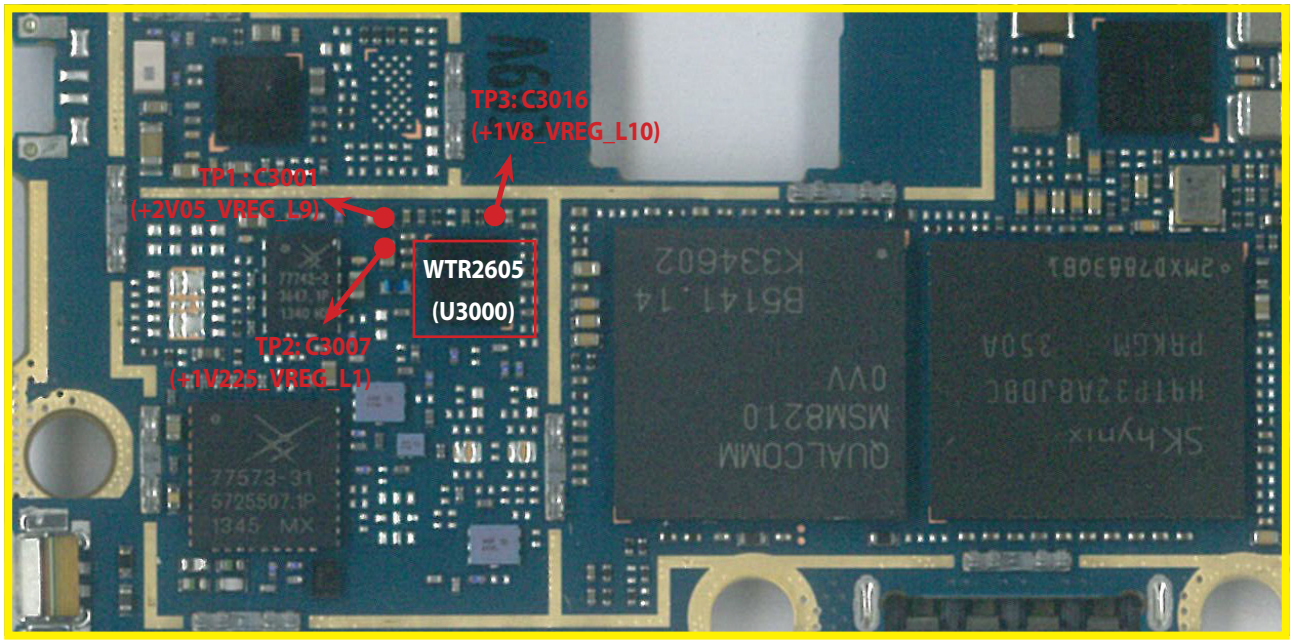

<Main Top>

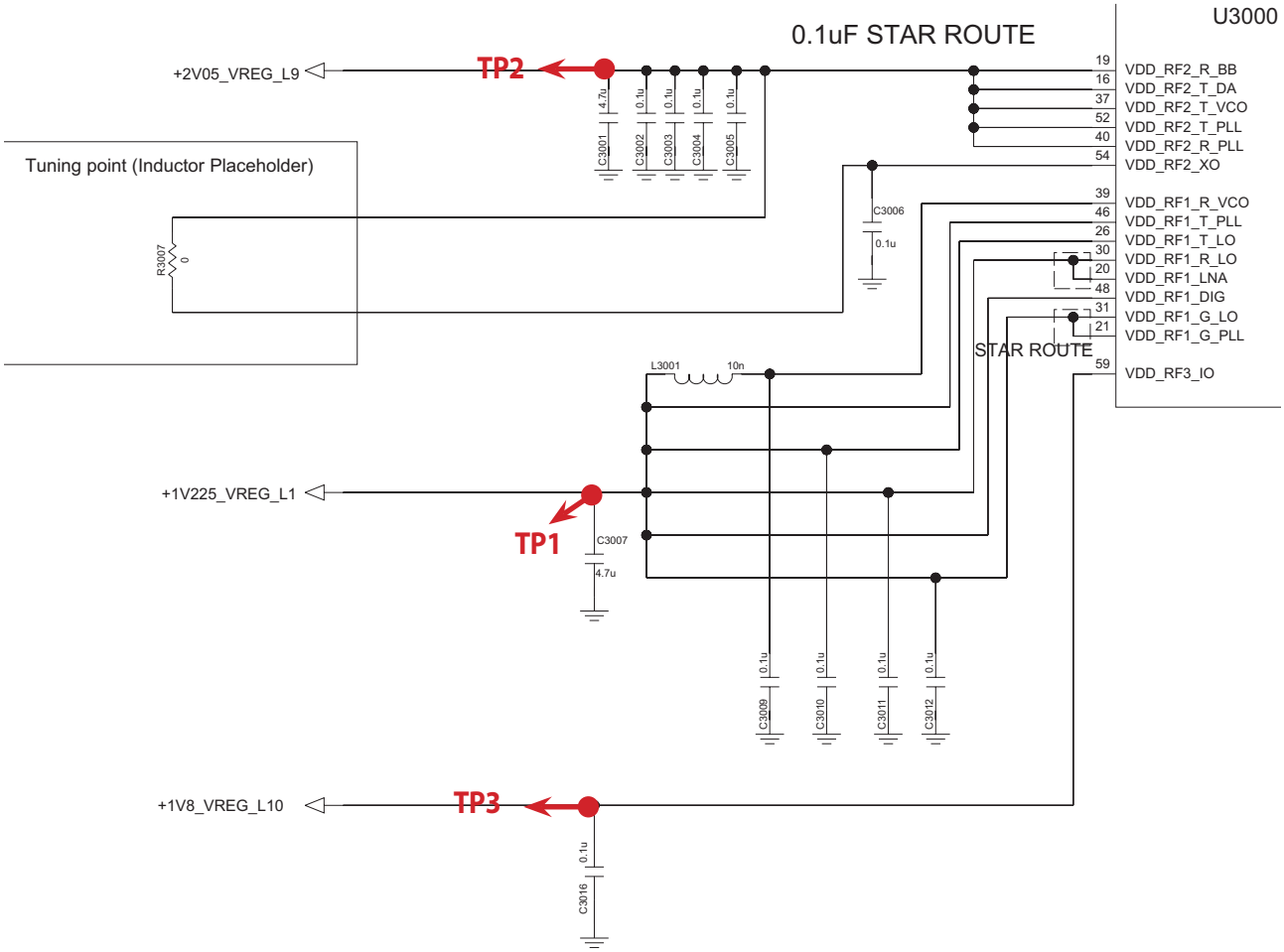

Copyright © 2014 LG Electronics. Inc. All right reserved.
Only for training and service purposes

3.2.2.2 Checking WTR2605 XO circuit

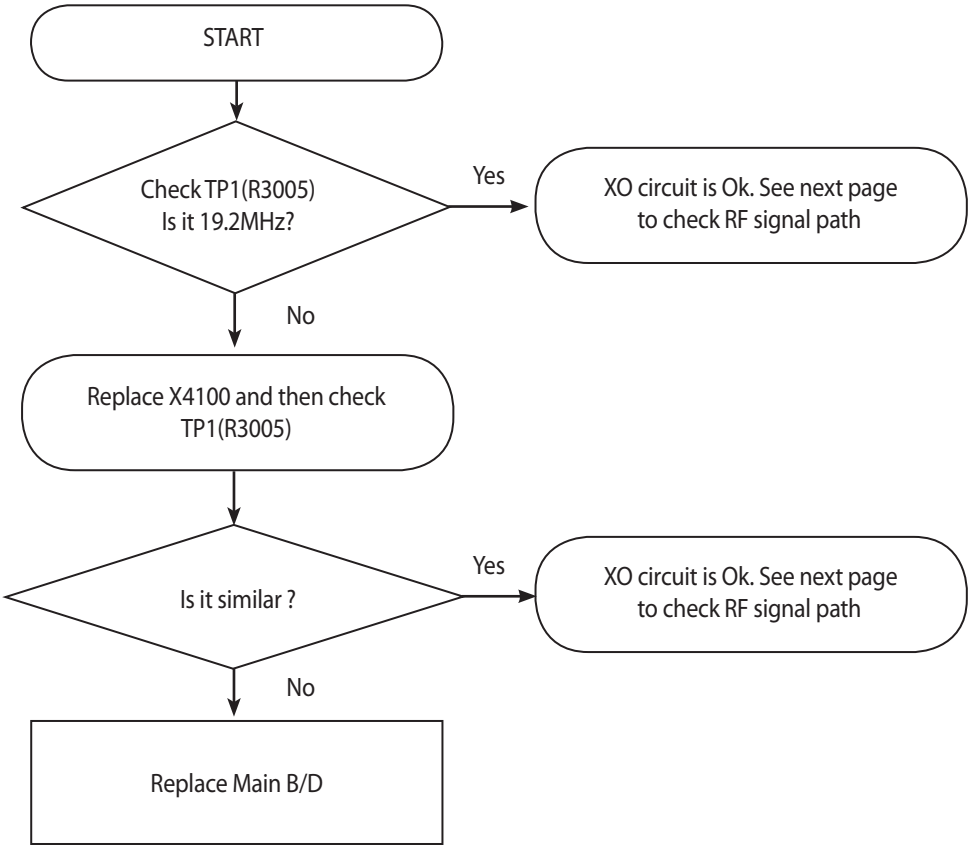

Copyright © 2014 LG Electronics. Inc. All right reserved.
Only for training and service purposes

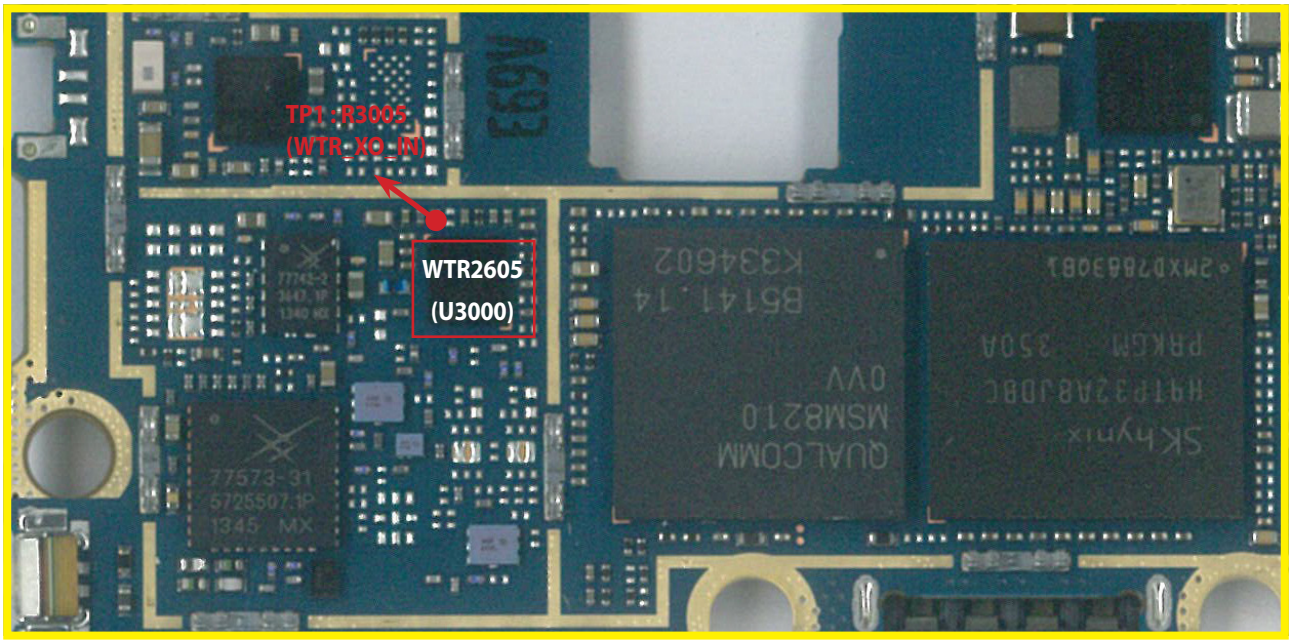

<Main Top>

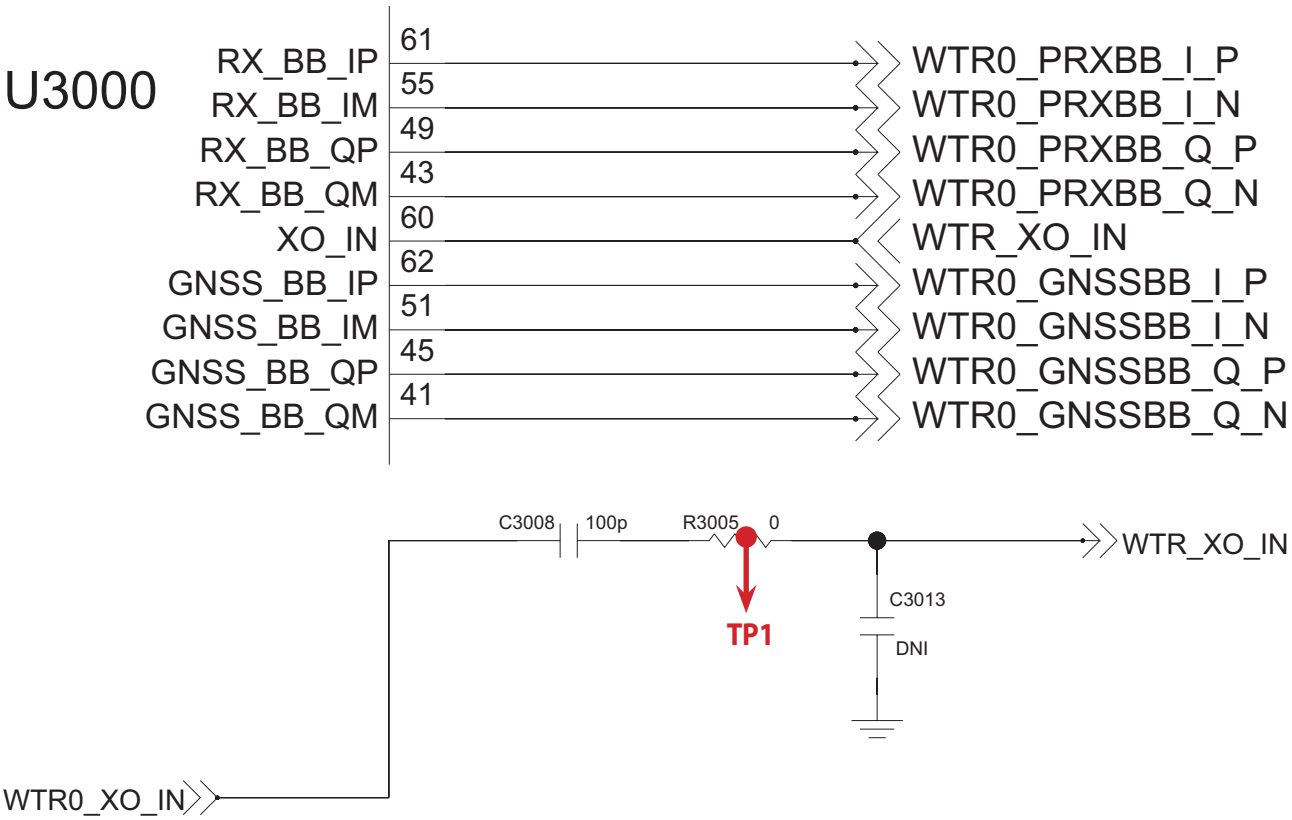

Copyright © 2014 LG Electronics. Inc. All right reserved.
Only for training and service purposes

3.2.2.3 Checking B8 TX PA

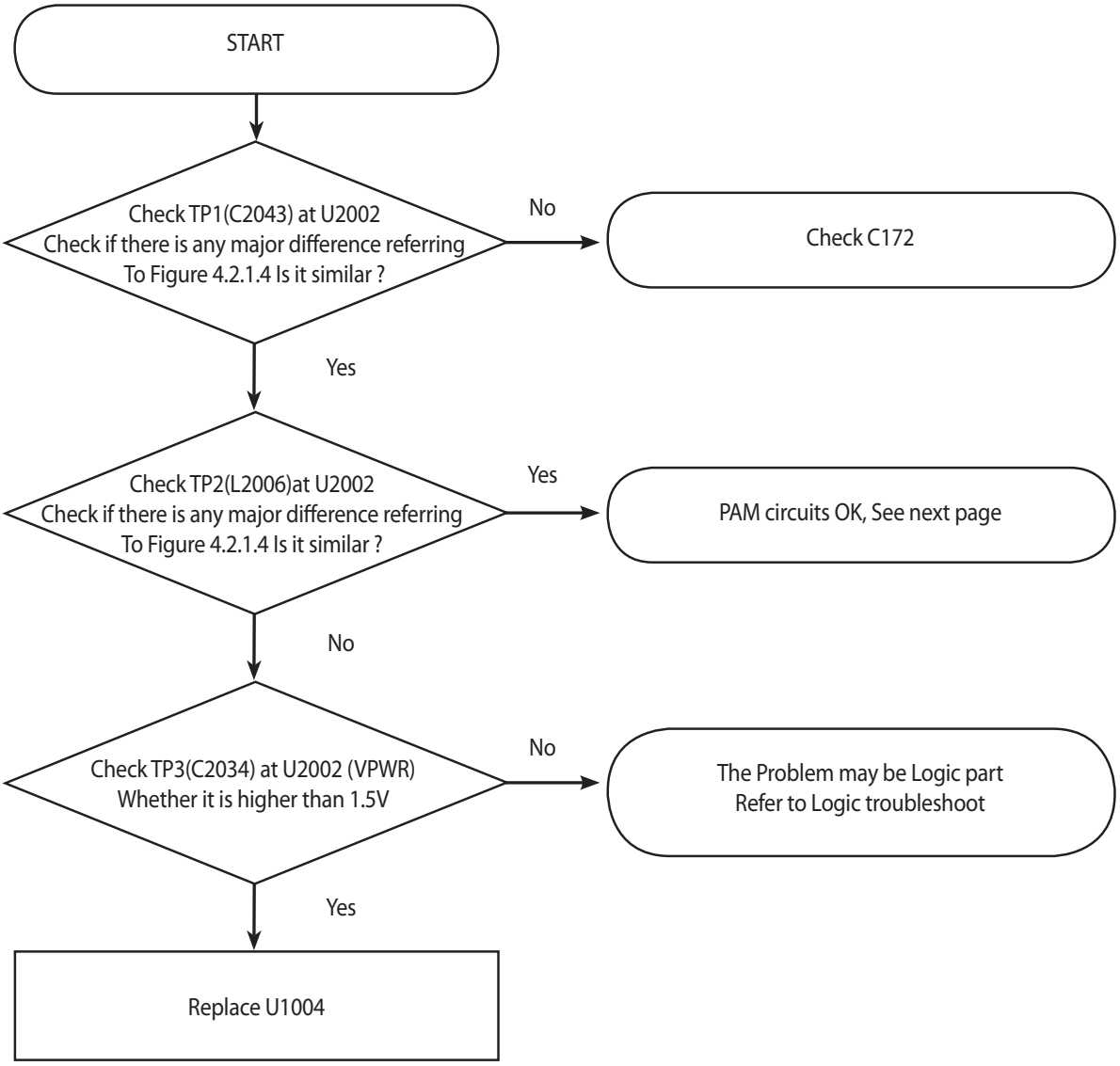

Copyright © 2014 LG Electronics. Inc. All right reserved.
Only for training and service purposes

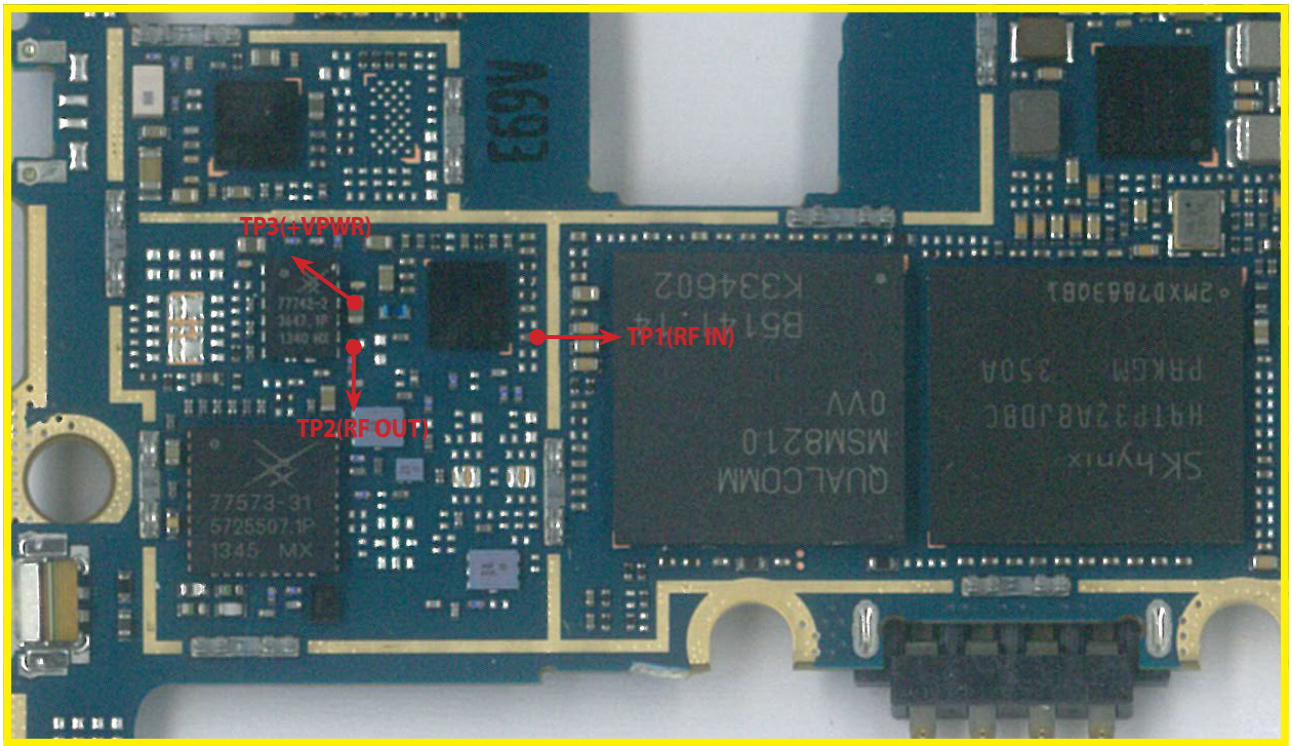

<Main Top>

Copyright © 2014 LG Electronics. Inc. All right reserved.
Only for training and service purposes

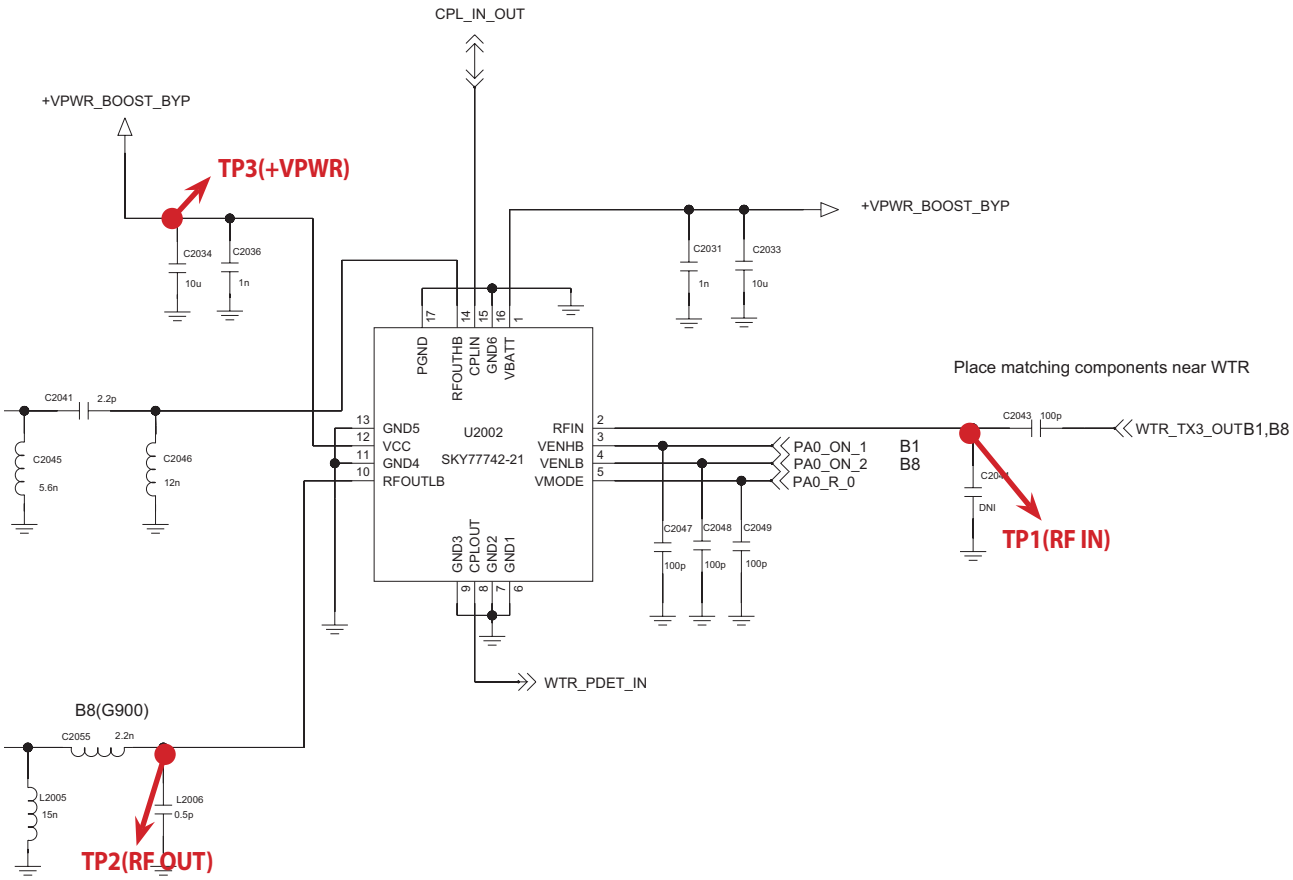

Copyright © 2014 LG Electronics. Inc. All right reserved.
Only for training and service purposes

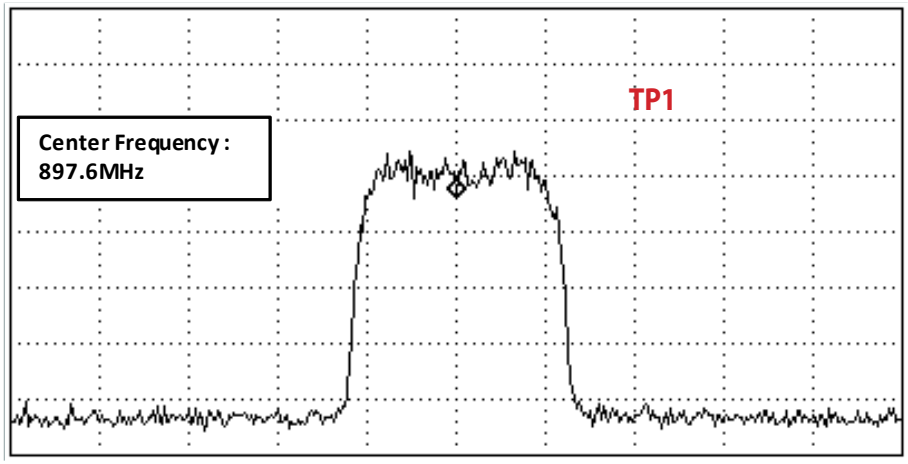

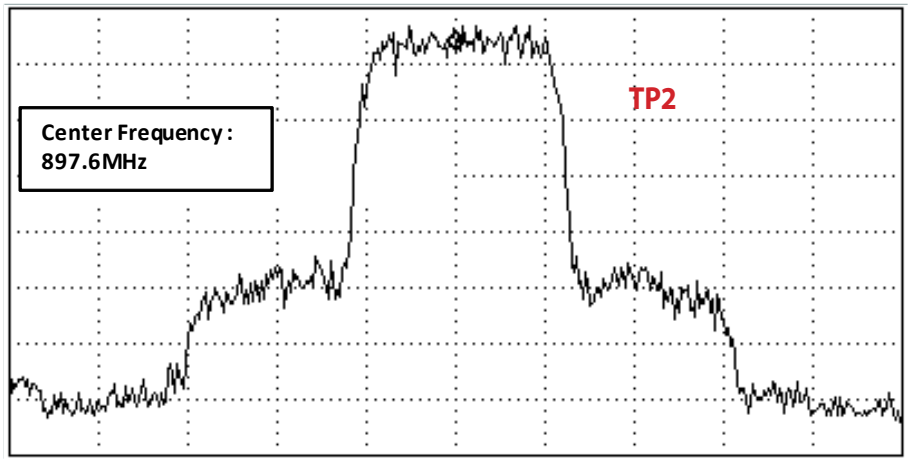

Figure 3.2.1.4

Copyright © 2014 LG Electronics. Inc. All right reserved.
Only for training and service purposes

3.2.2.4 Checking RF signal path (DPX)

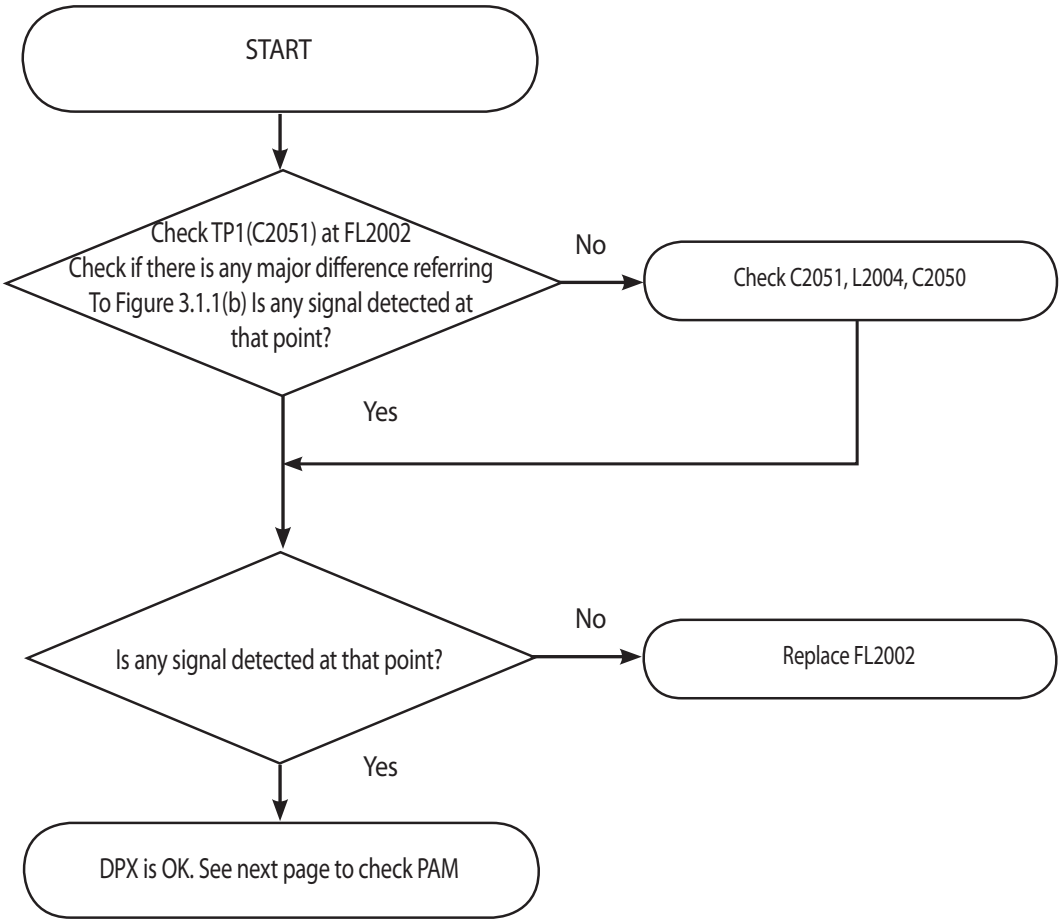

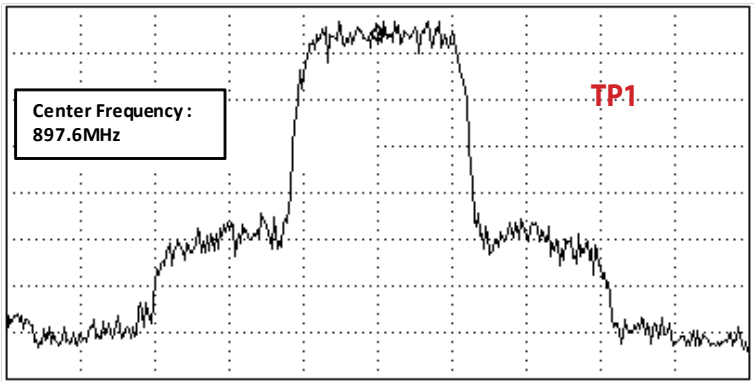

Figure 3.1.1 (b)

Copyright © 2014 LG Electronics. Inc. All right reserved.
Only for training and service purposes

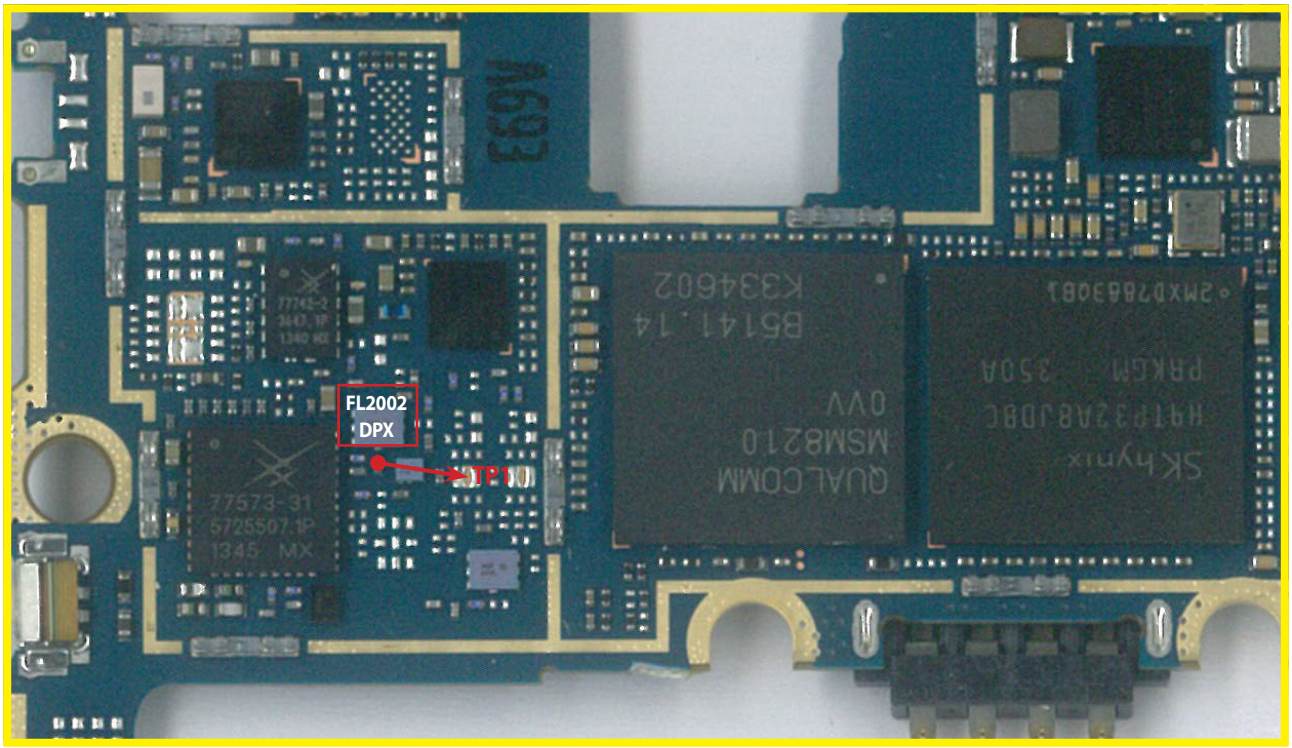

<Main Top>

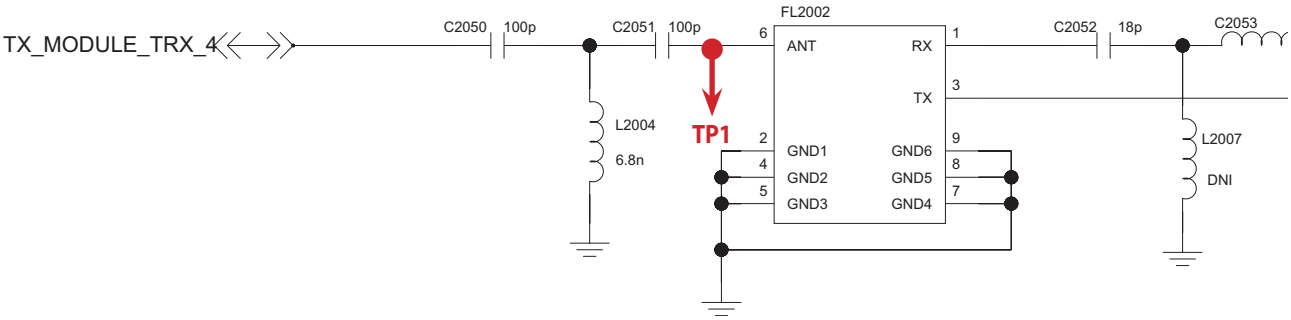

Copyright © 2014 LG Electronics. Inc. All right reserved.
Only for training and service purposes

3.2.2.5 Checking RF signal path (PAM)

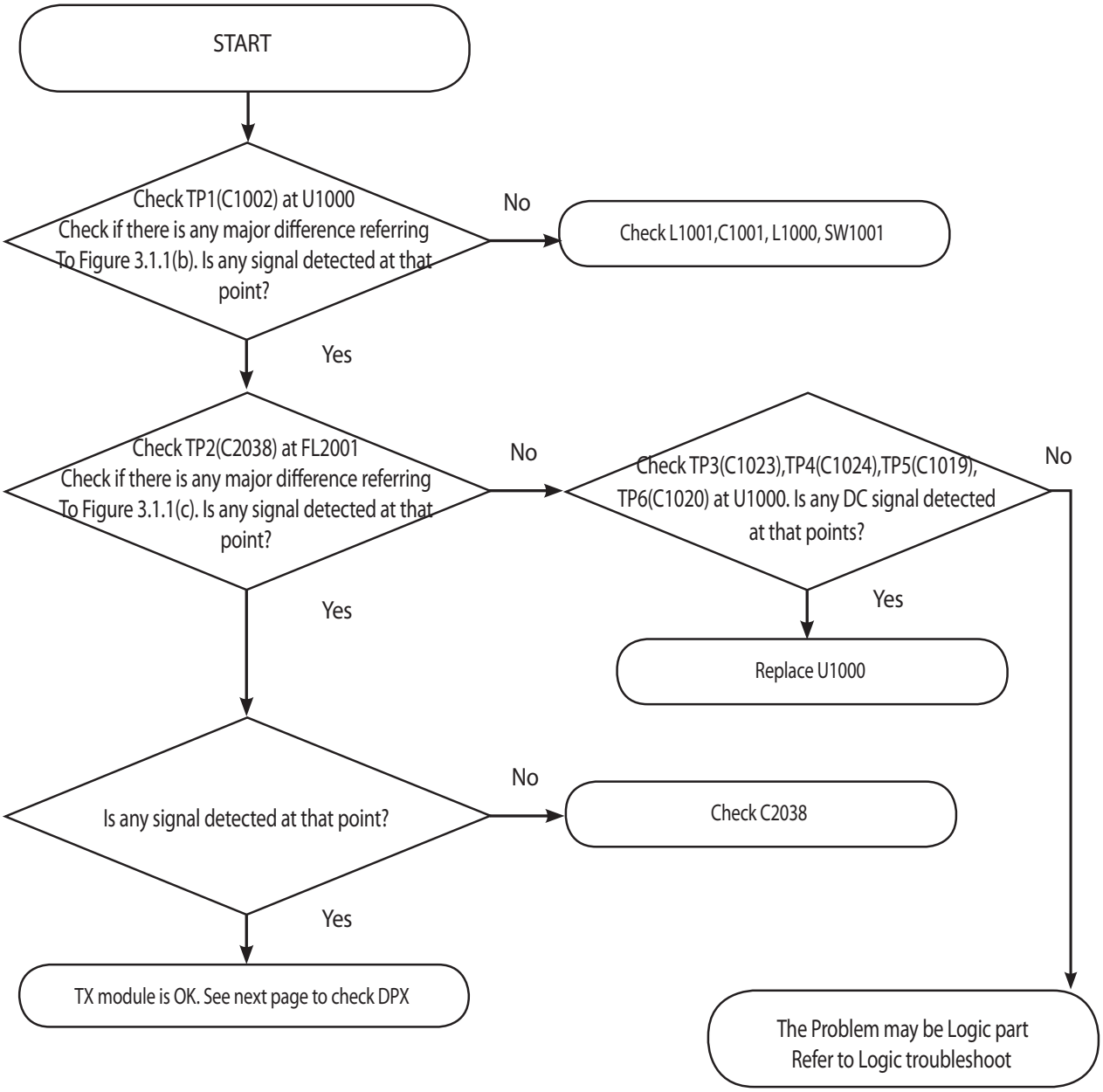

Copyright © 2014 LG Electronics. Inc. All right reserved.
Only for training and service purposes

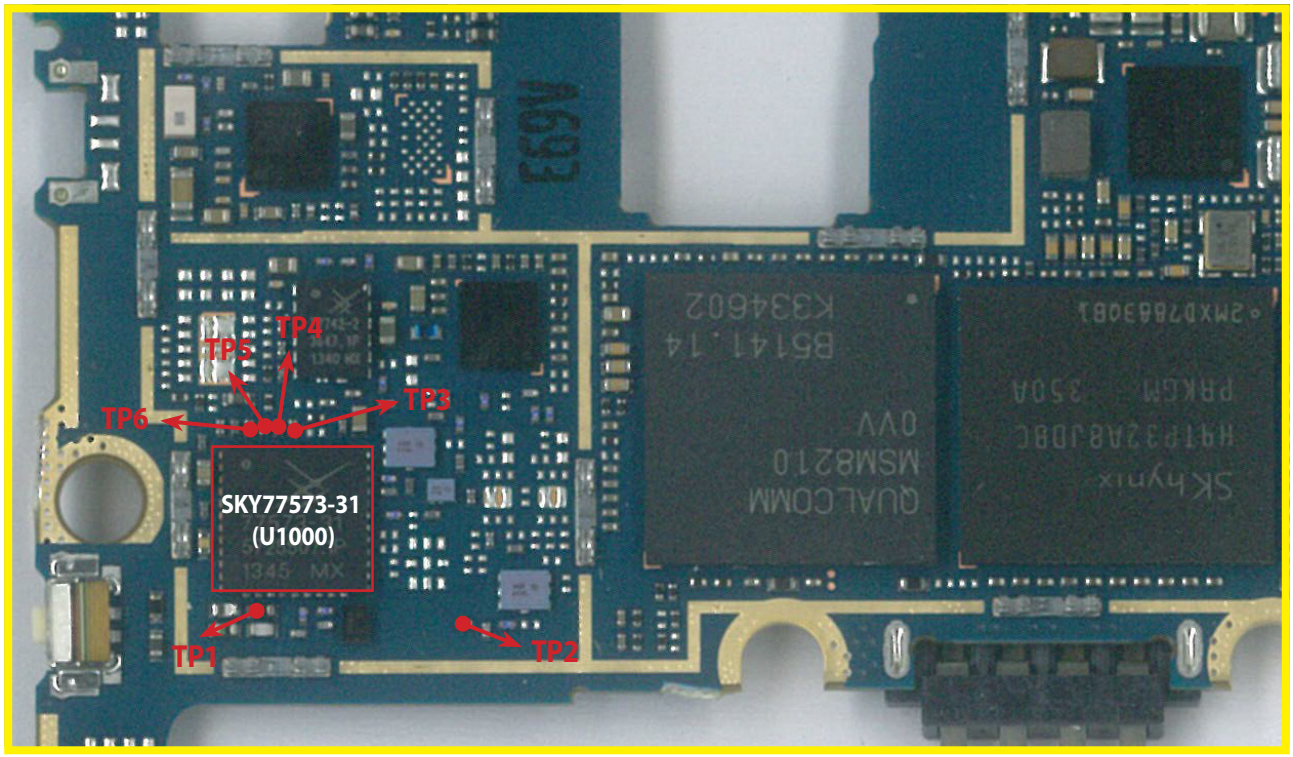

<Main Top>

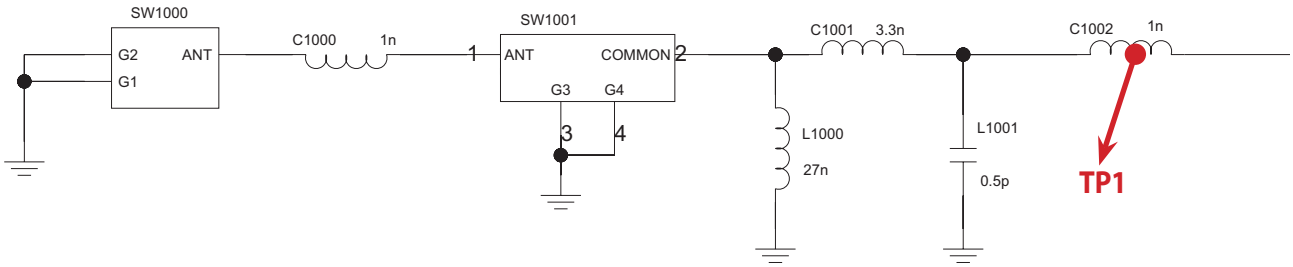

Copyright © 2014 LG Electronics. Inc. All right reserved.
Only for training and service purposes

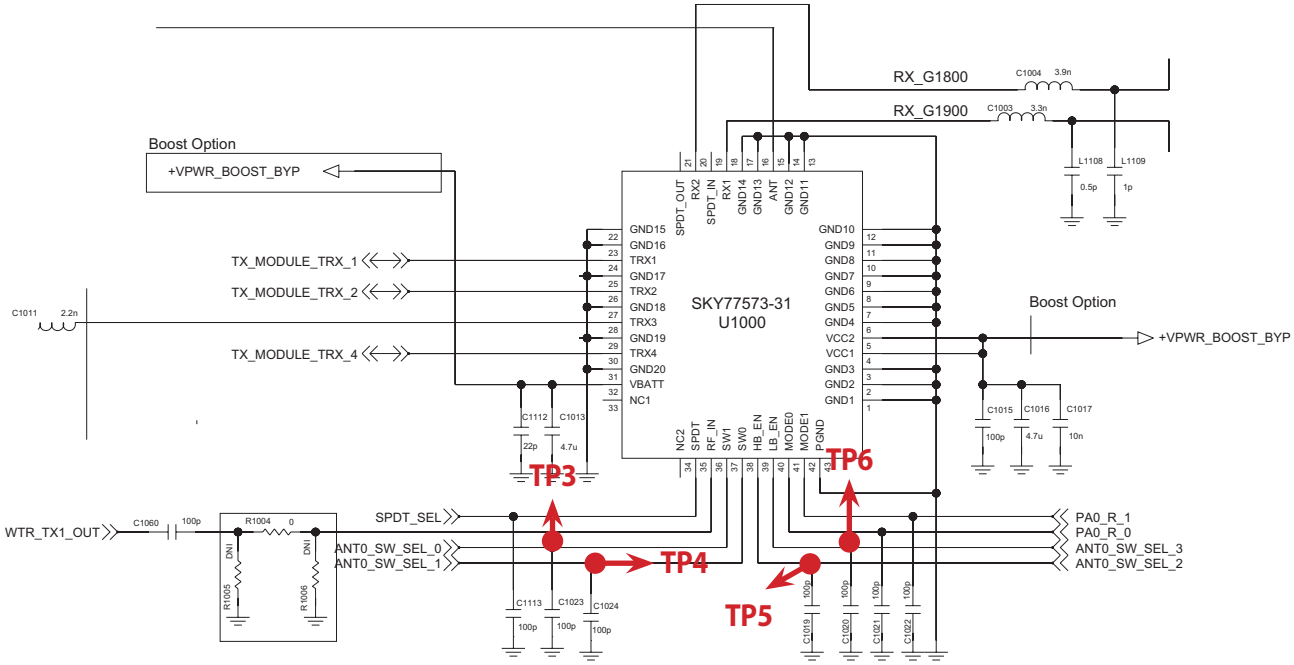

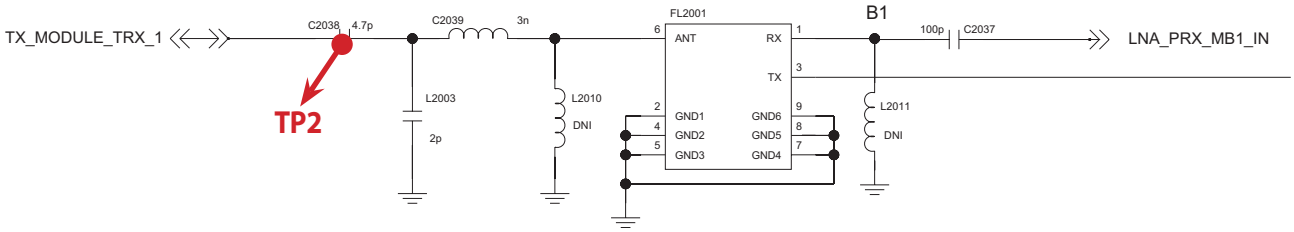

Copyright © 2014 LG Electronics. Inc. All right reserved.
Only for training and service purposes

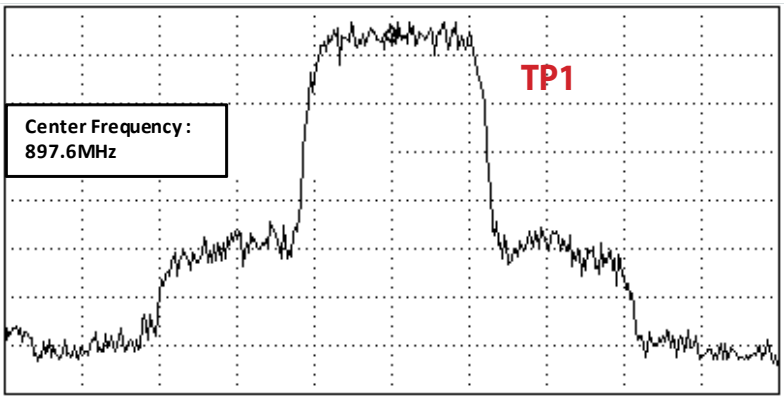

Figure 3.1.1 (b)

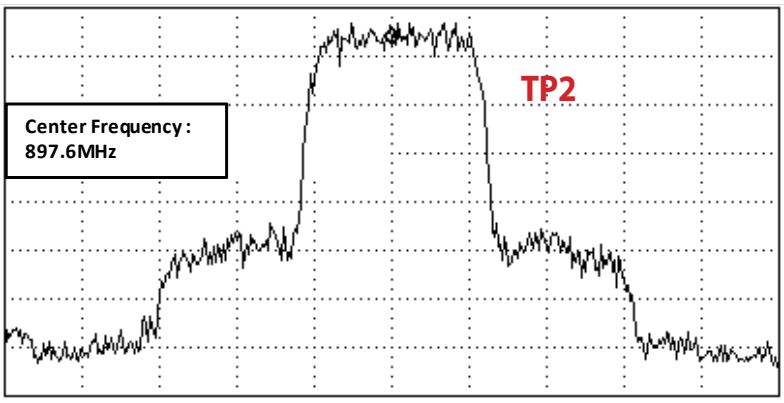

Figure 3.1.1 (c)

Copyright © 2014 LG Electronics. Inc. All right reserved.
Only for training and service purposes

3.3 GSM Rx Part Troubleshooting

3.3.1 GSM850 Rx

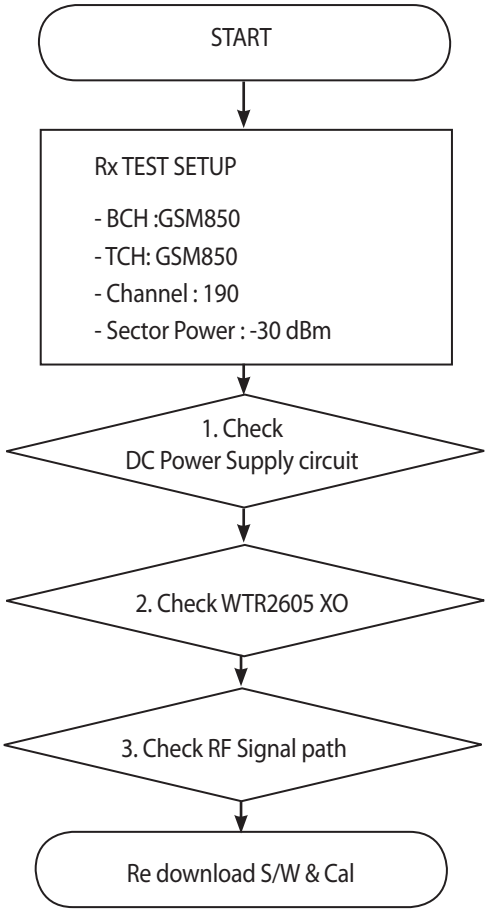

* There are no Test Points on the IQ Data Line. So It is impossible to check the IQ Data Wave form

Copyright © 2014 LG Electronics. Inc. All right reserved.
Only for training and service purposes

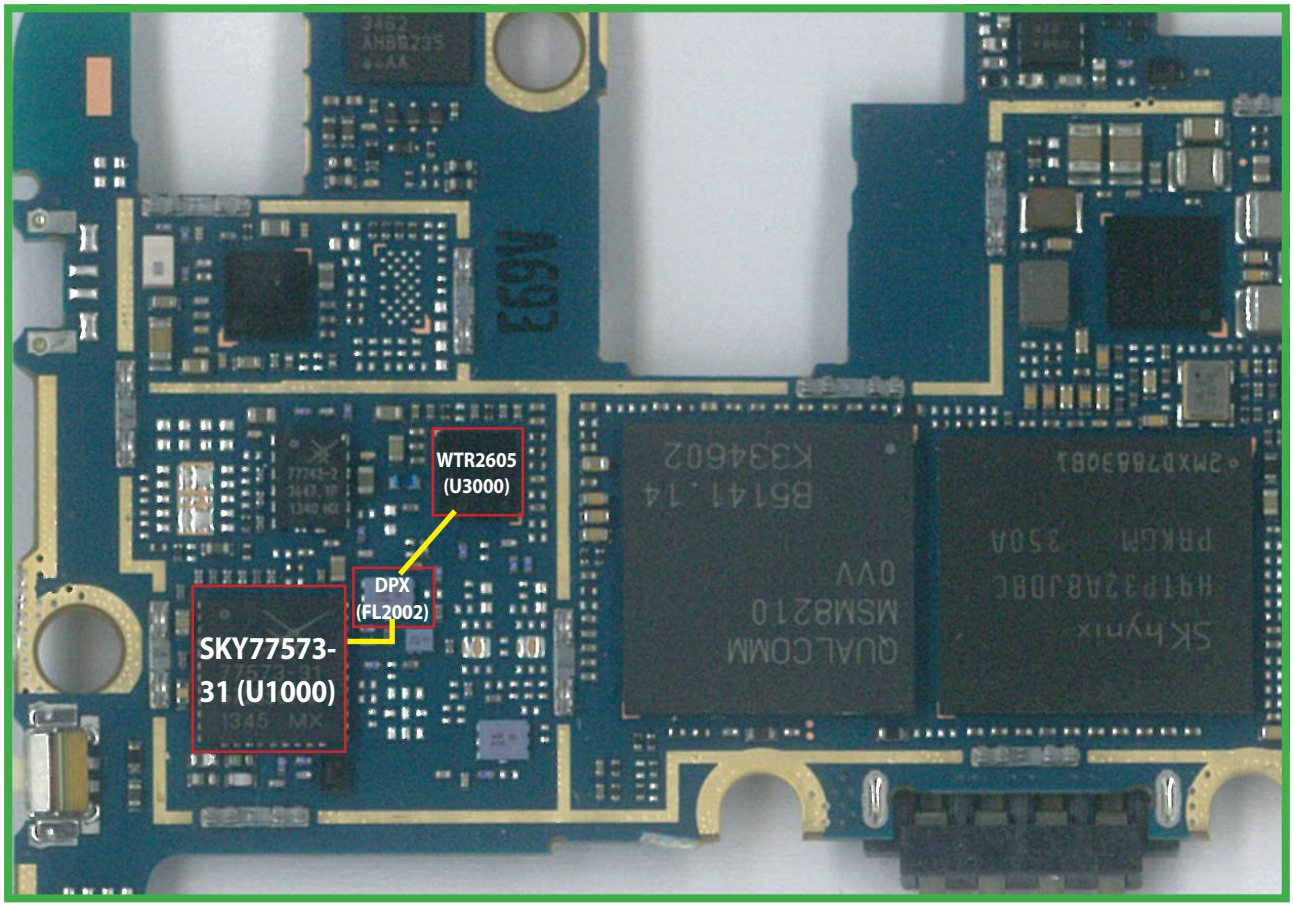

<Main Top>

Copyright © 2014 LG Electronics. Inc. All right reserved.
Only for training and service purposes

3.3.1.1 Checking DC Power supply circuit

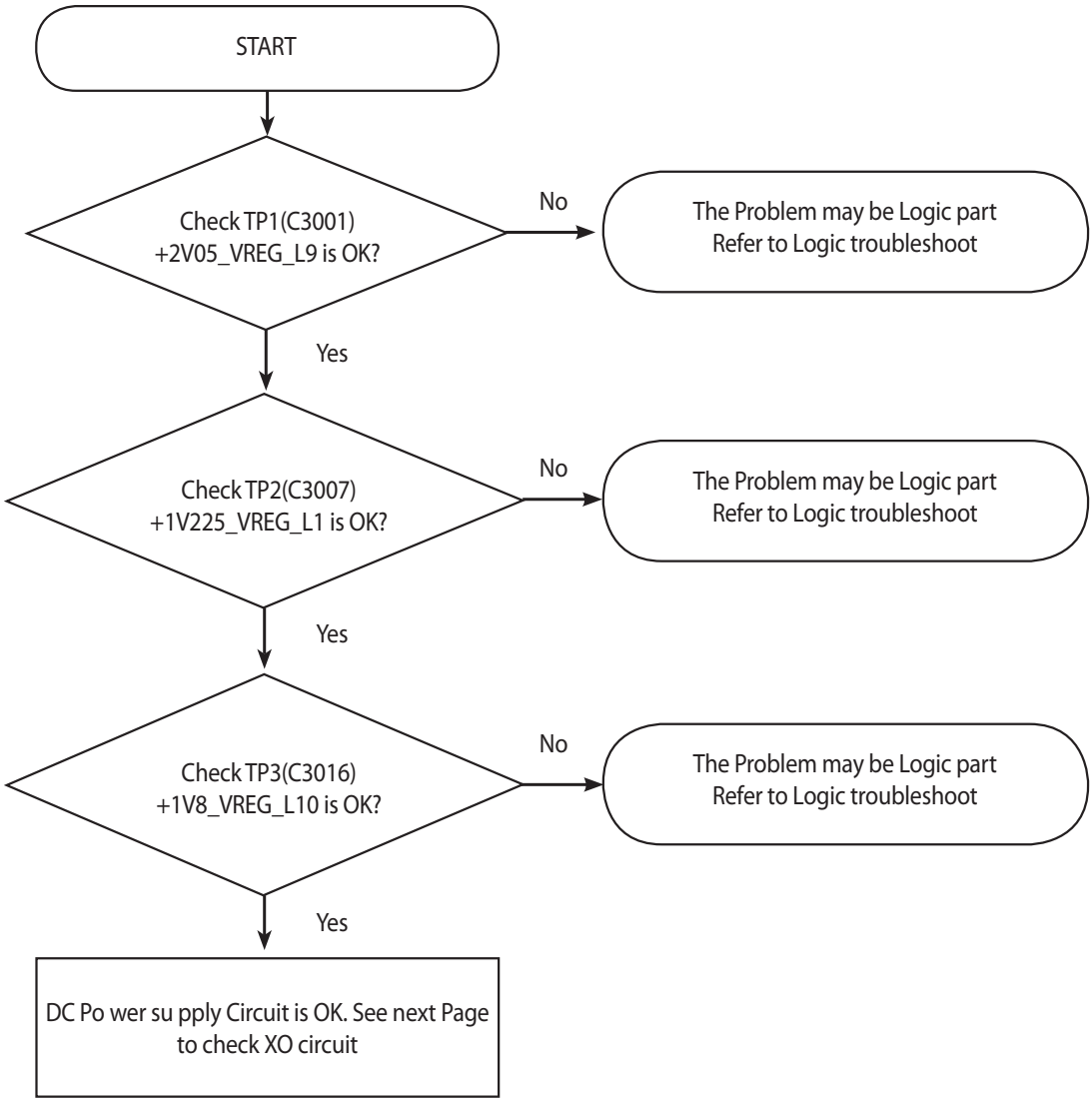

Copyright © 2014 LG Electronics. Inc. All right reserved.
Only for training and service purposes

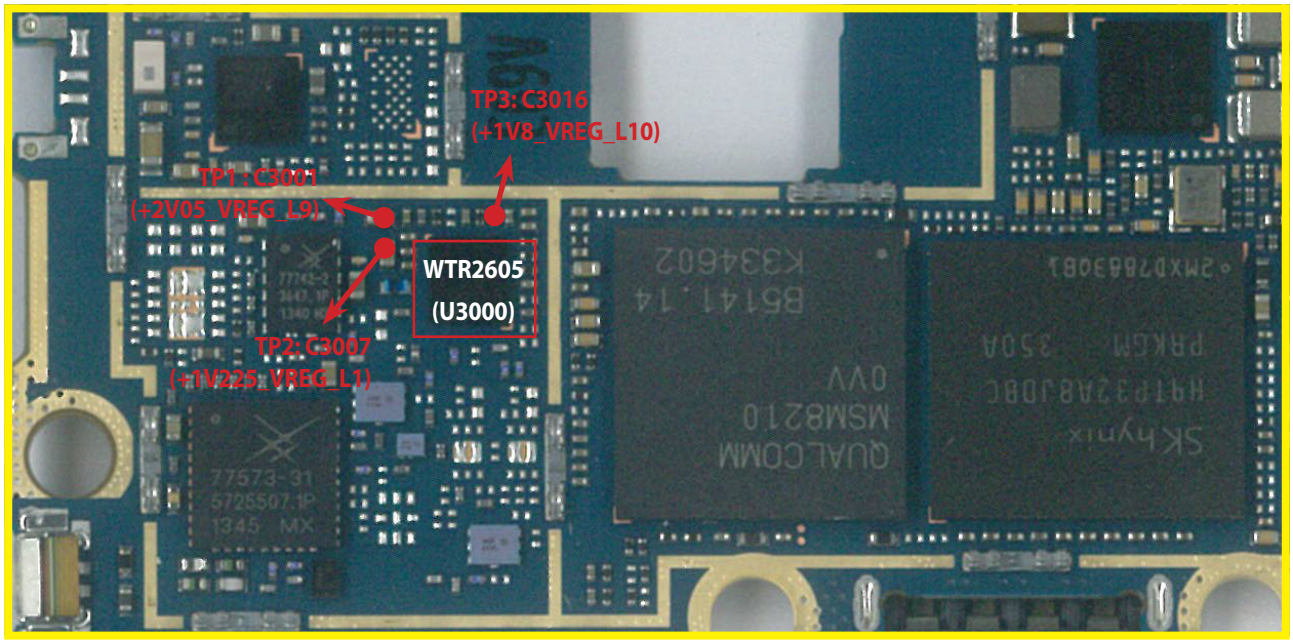

<Main Top>

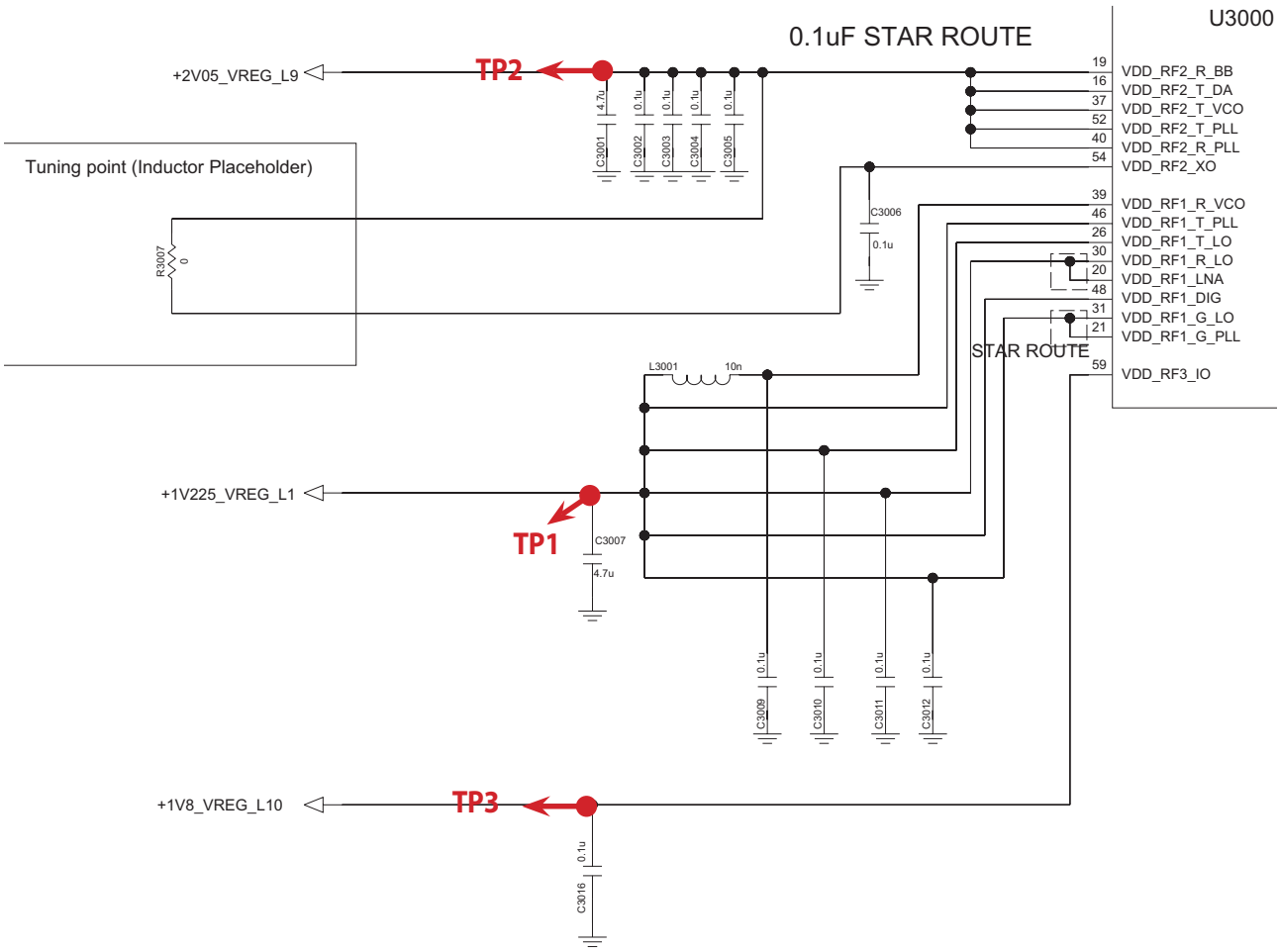

Copyright © 2014 LG Electronics. Inc. All right reserved.
Only for training and service purposes

3.3.1.2 Checking WTR2605 XO circuit

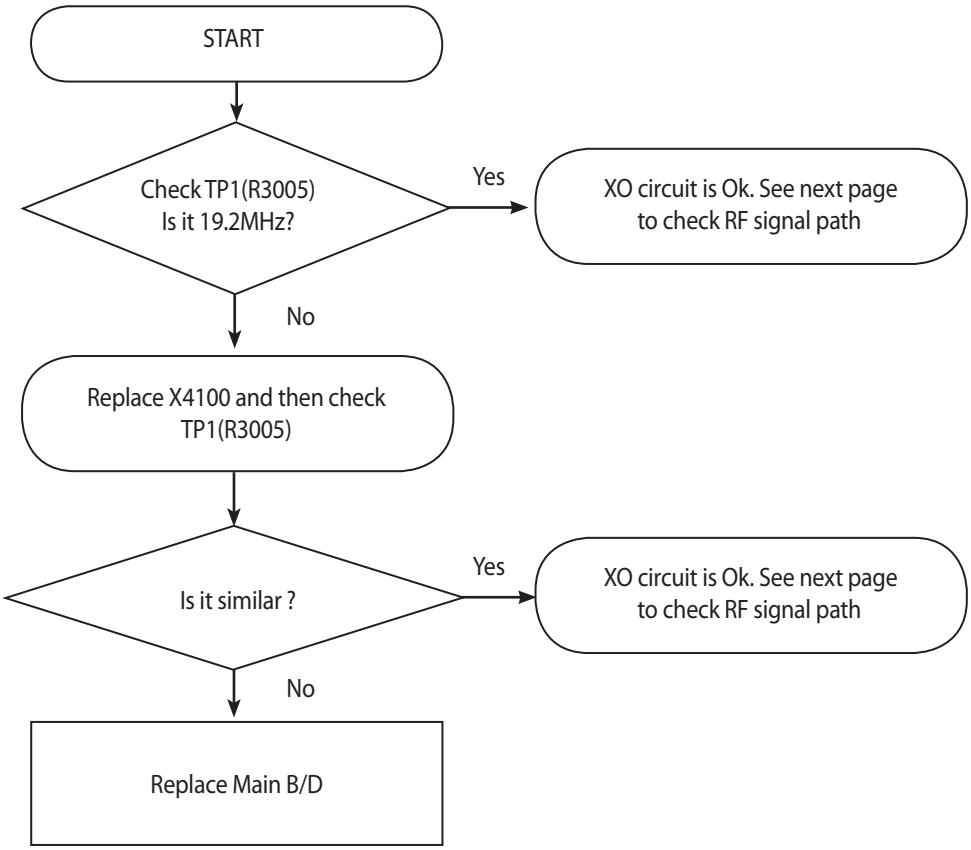

Copyright © 2014 LG Electronics. Inc. All right reserved.
Only for training and service purposes

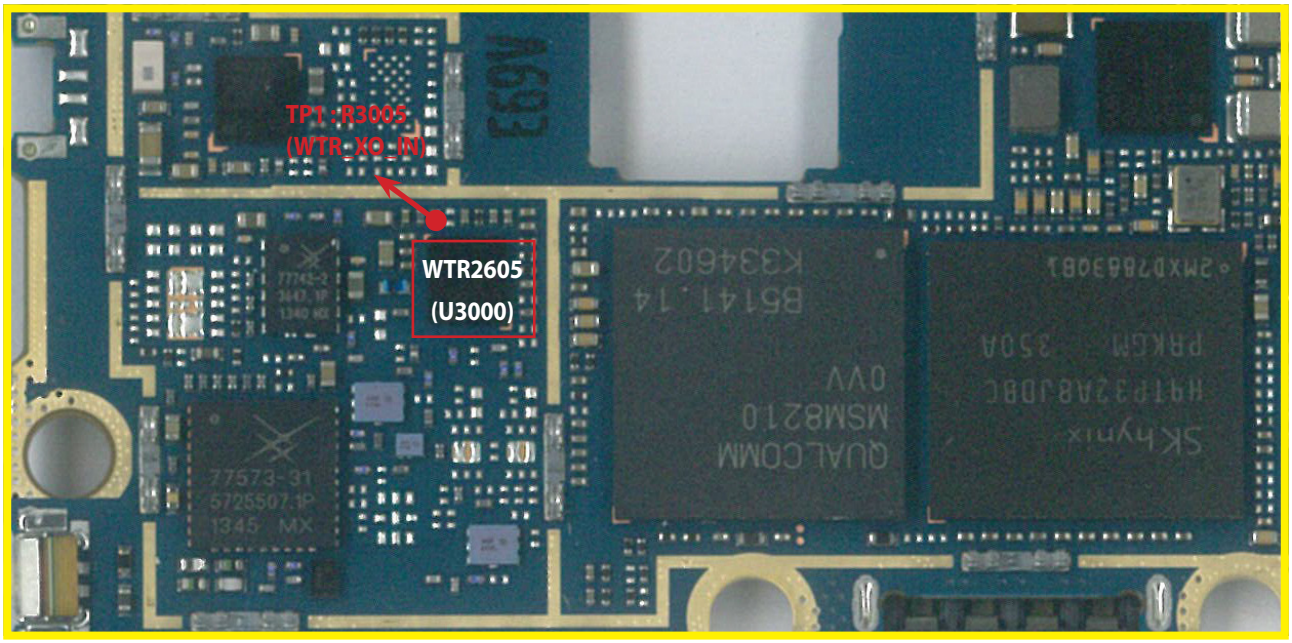

<Main Top>

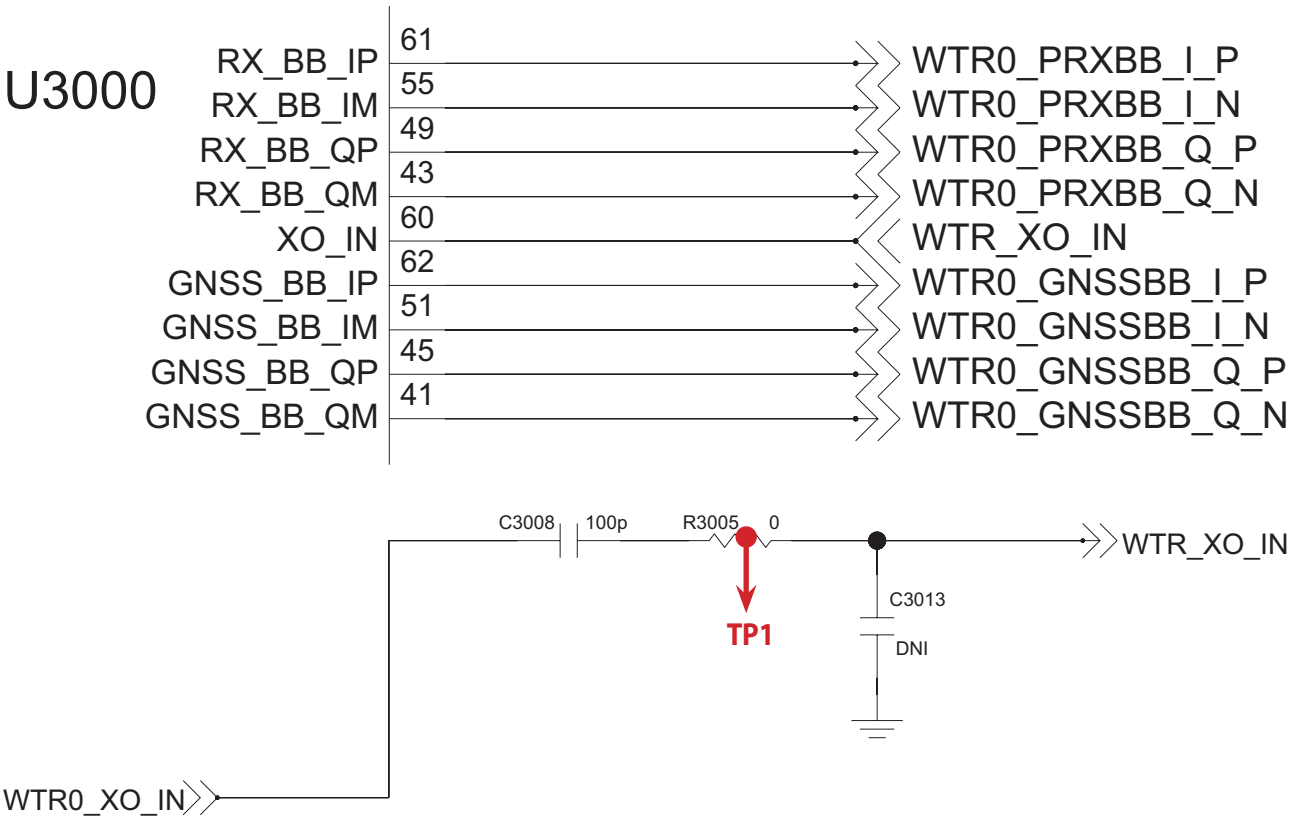

Copyright © 2014 LG Electronics. Inc. All right reserved.
Only for training and service purposes

3.3.1.3 Checking RF signal path (PAM)

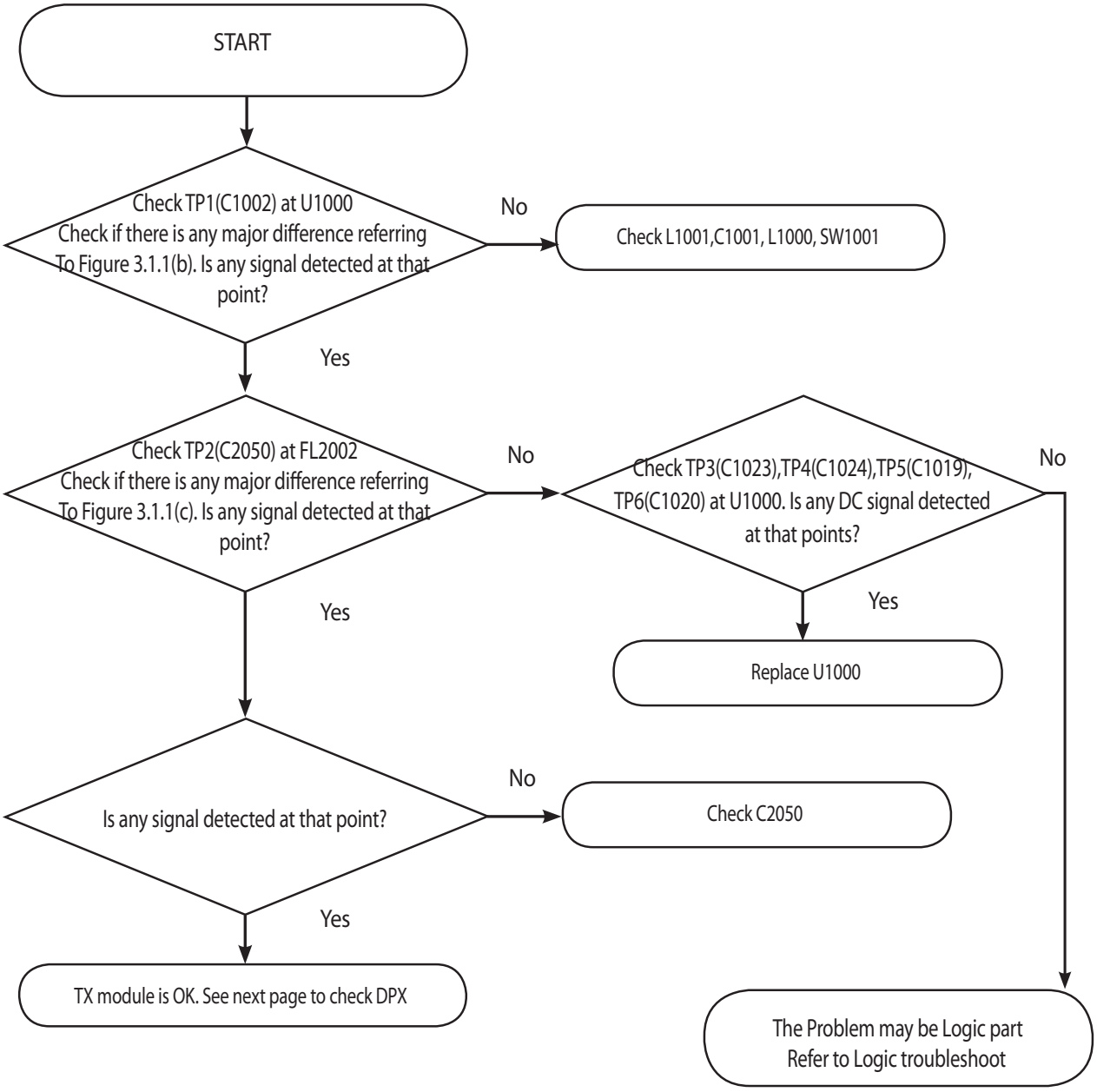

Copyright © 2014 LG Electronics. Inc. All right reserved.
Only for training and service purposes

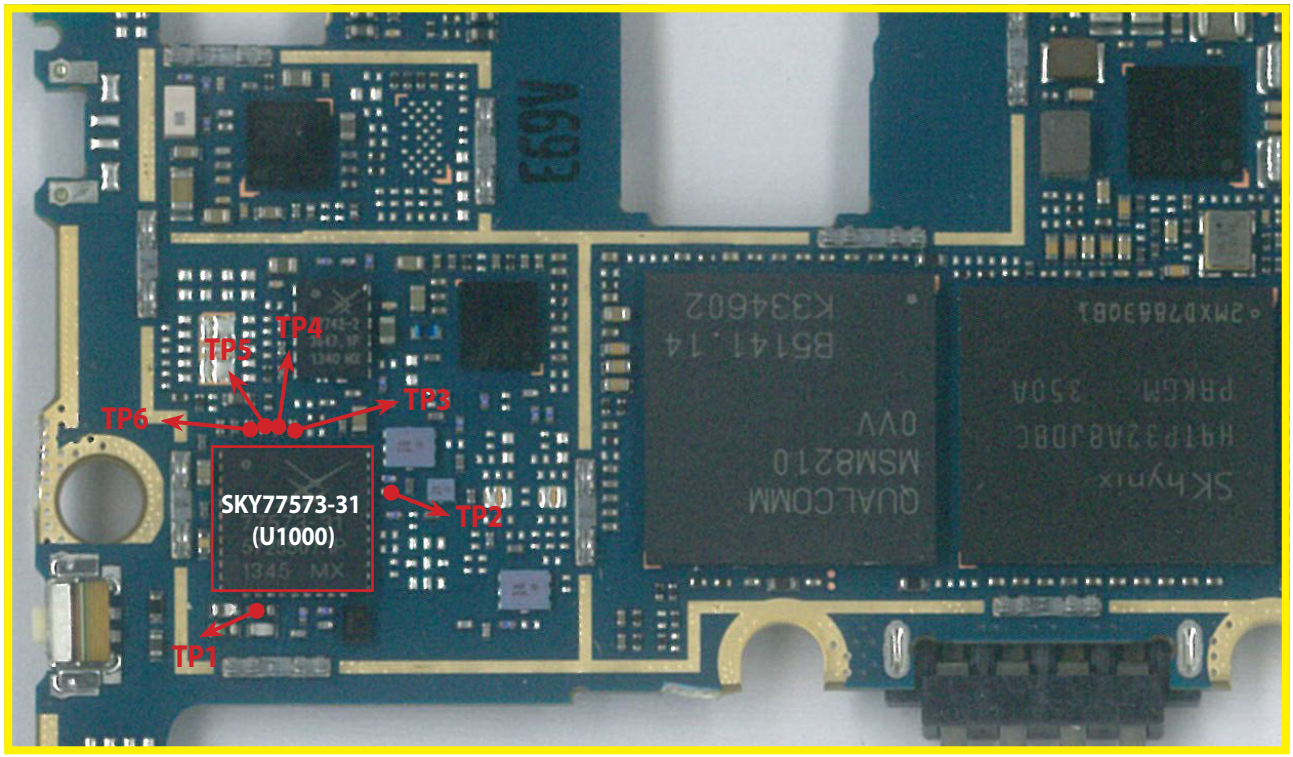

<Main Top>

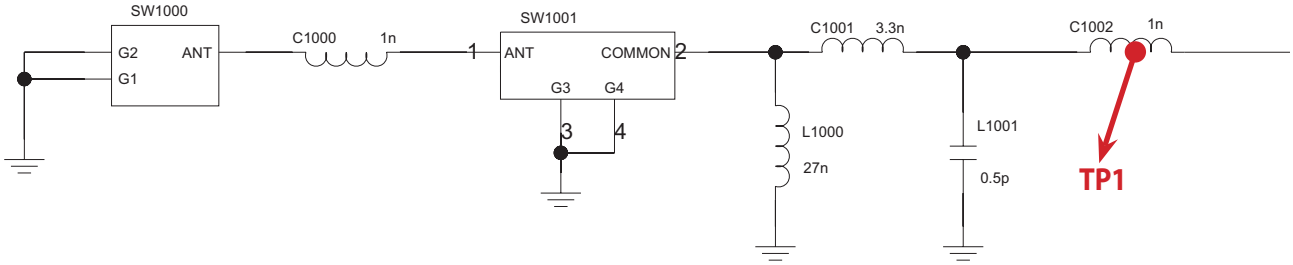

Copyright © 2014 LG Electronics. Inc. All right reserved.
Only for training and service purposes

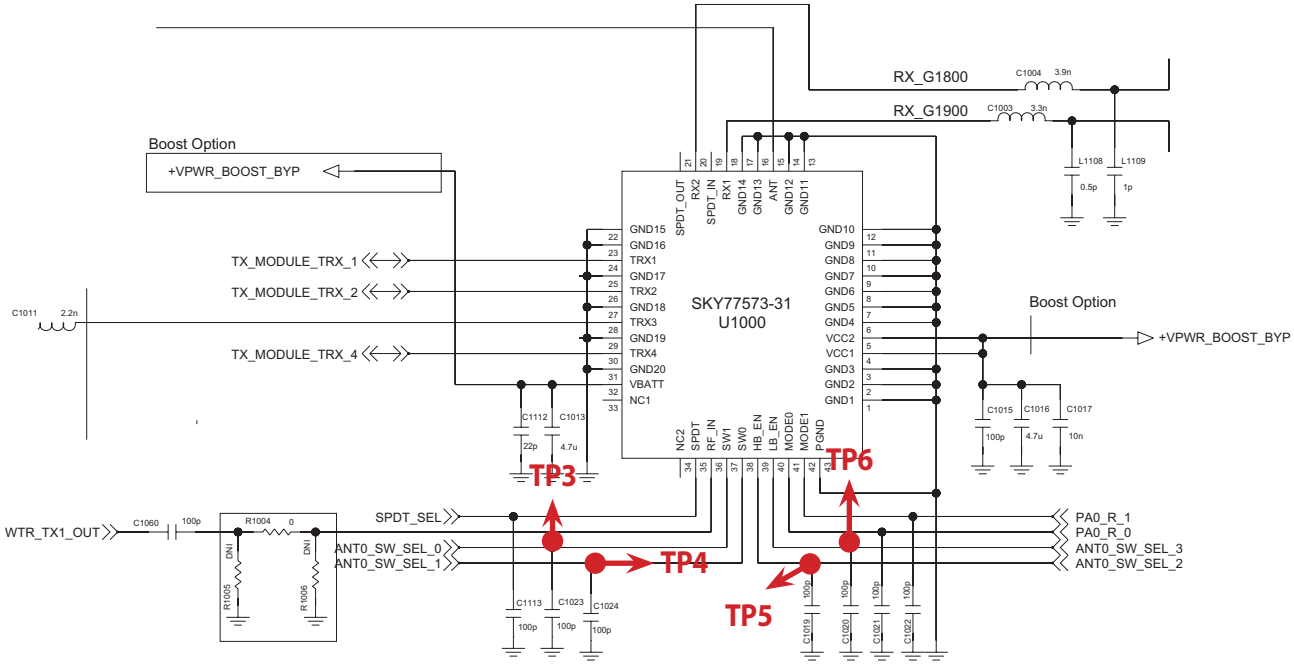

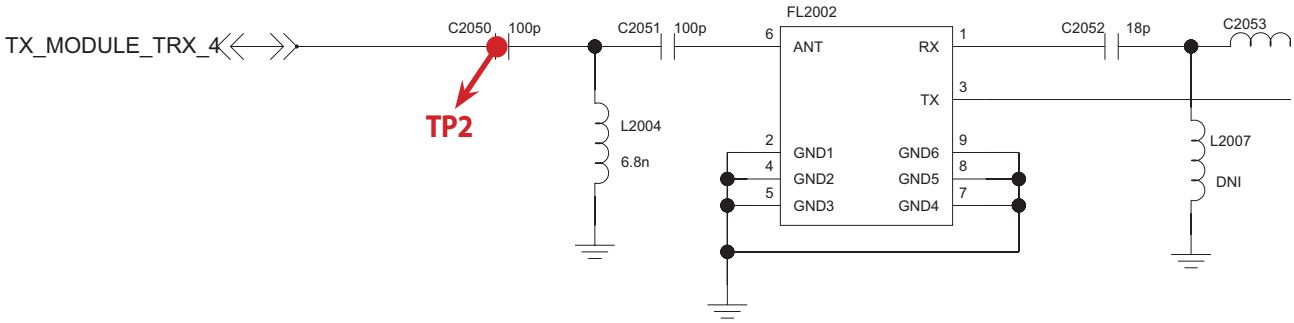

Copyright © 2014 LG Electronics. Inc. All right reserved.
Only for training and service purposes

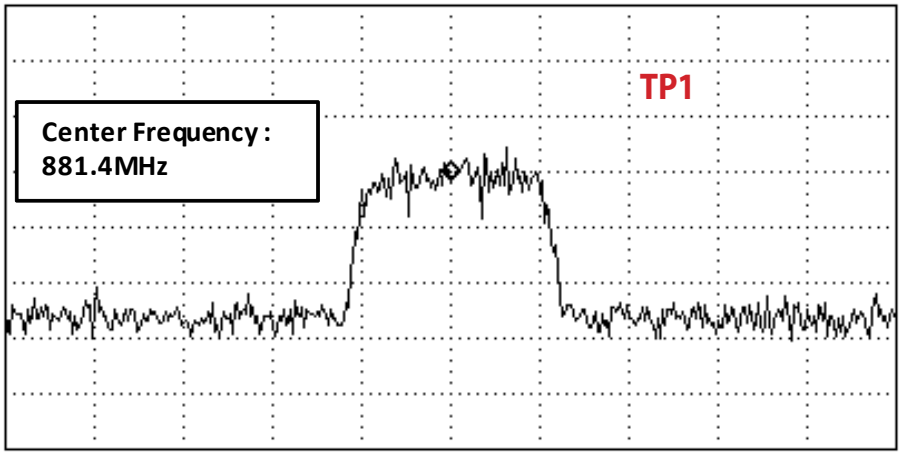

Figure 3.1.1 (b)

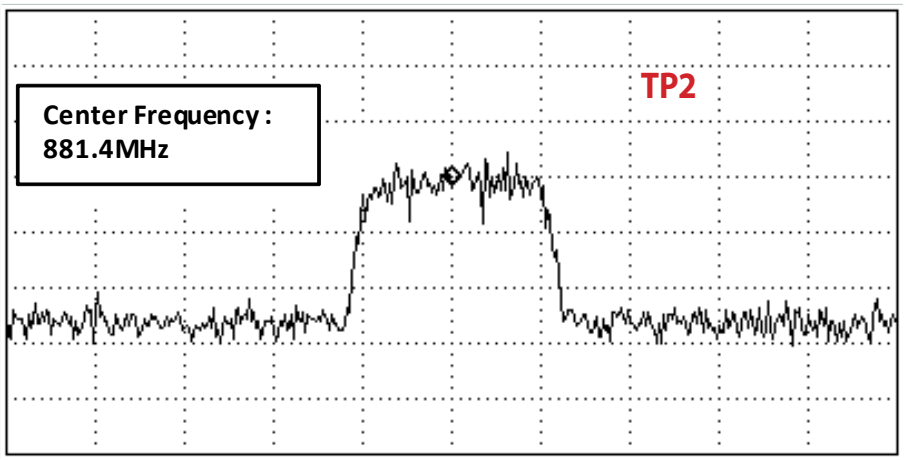

Figure 3.1.1 (c)

Copyright © 2014 LG Electronics. Inc. All right reserved.
Only for training and service purposes

3.3.1.4 Checking RF Signal Path (Duplexer)

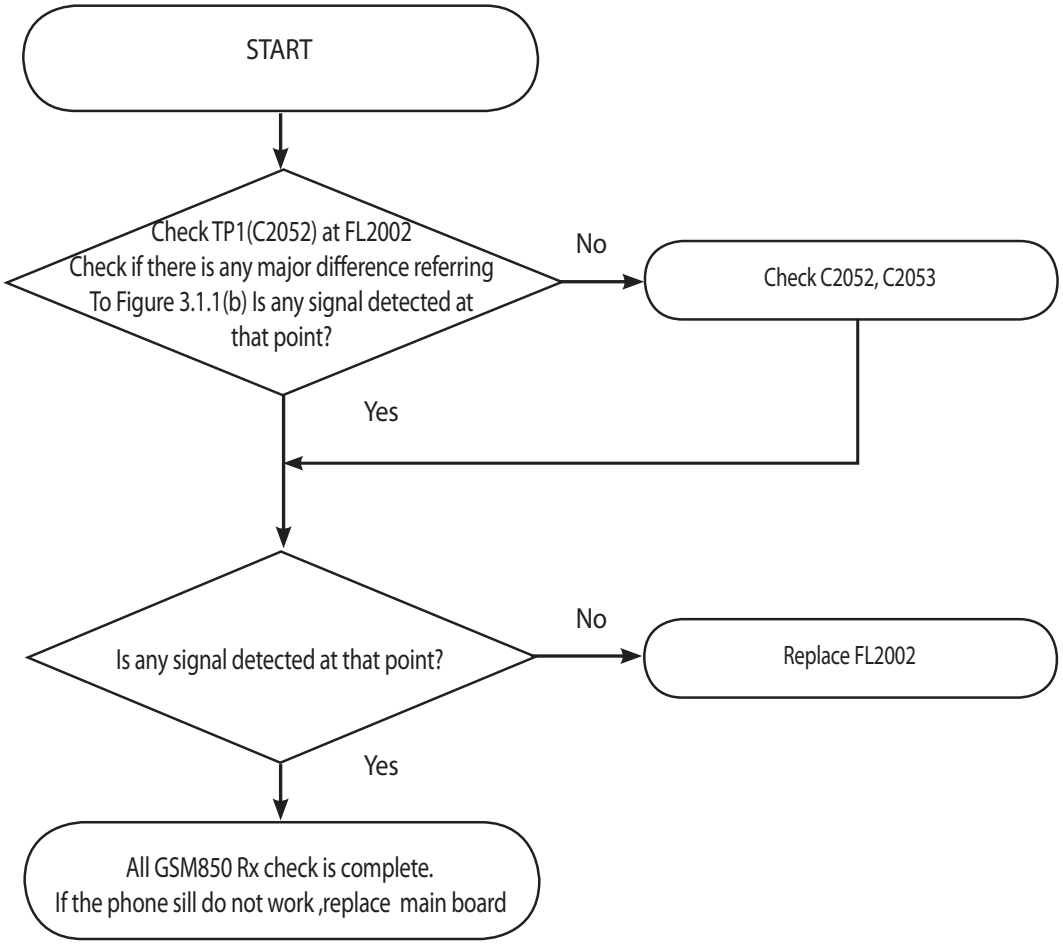

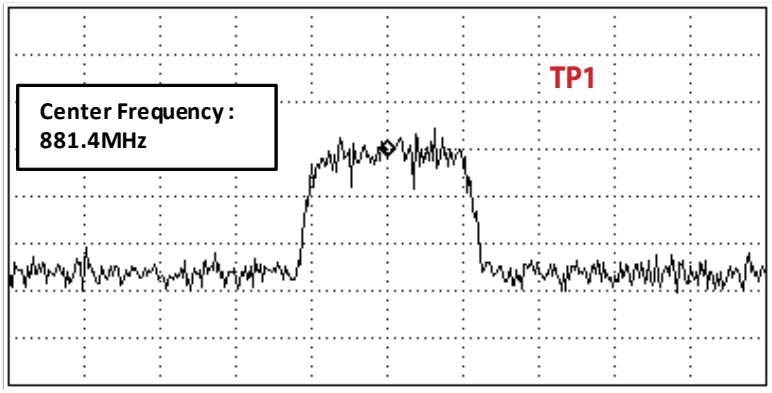

Figure 3.1.1 (b)

Copyright © 2014 LG Electronics. Inc. All right reserved.
Only for training and service purposes

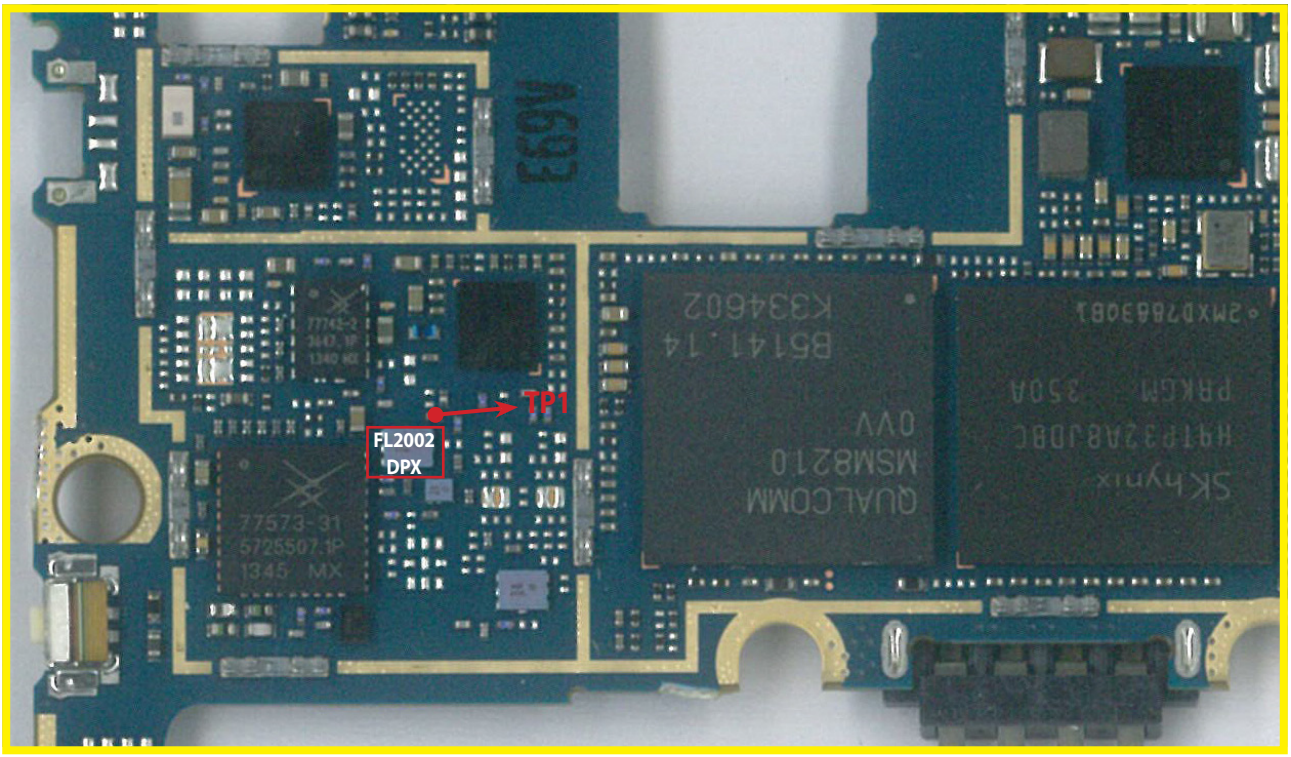

<Main Top>

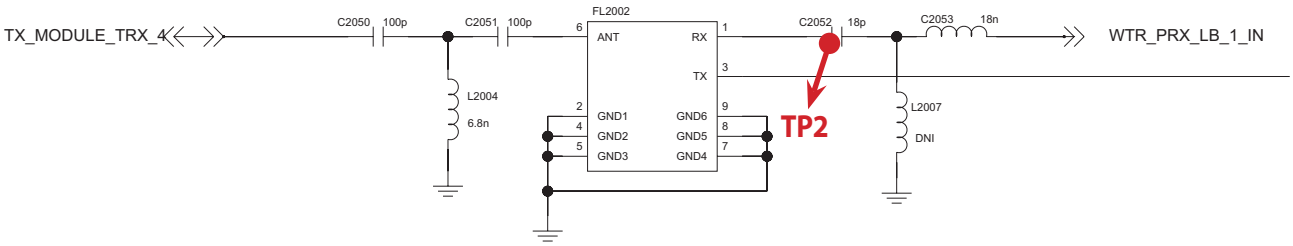

Copyright © 2014 LG Electronics. Inc. All right reserved.
Only for training and service purposes

3.3.2 GSM900 Rx

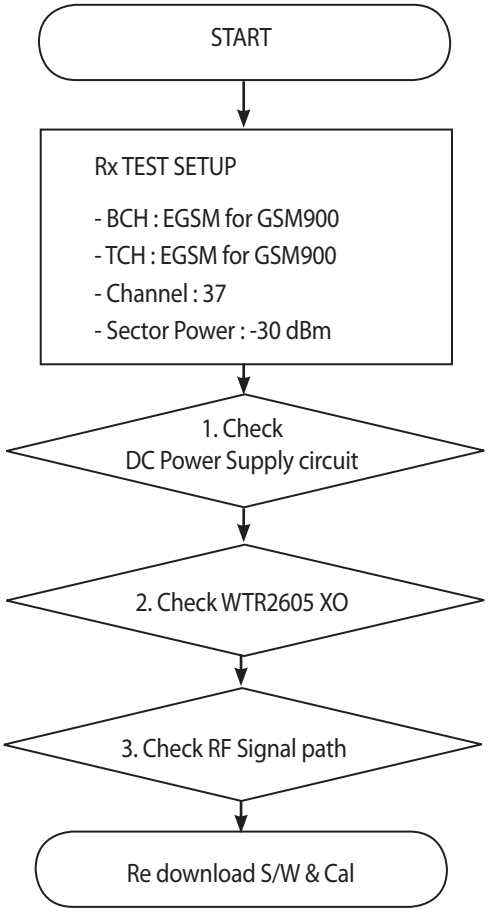

* There are no Test Points on the IQ Data Line. So It is impossible to check the IQ Data Wave form

Copyright © 2014 LG Electronics. Inc. All right reserved.
Only for training and service purposes

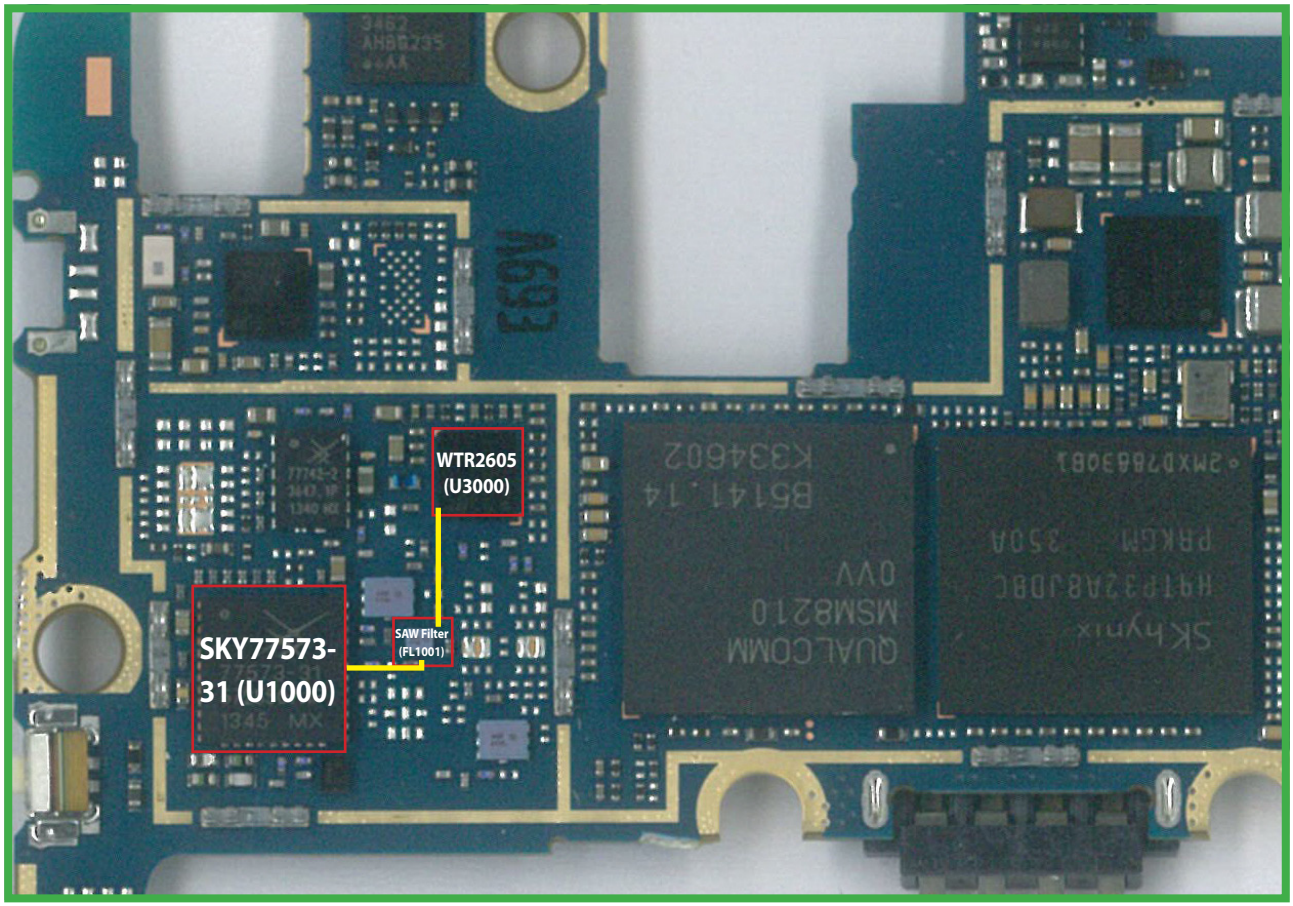

<Main Top>

Copyright © 2014 LG Electronics. Inc. All right reserved.
Only for training and service purposes

3.3.2.1 Checking DC Power supply circuit

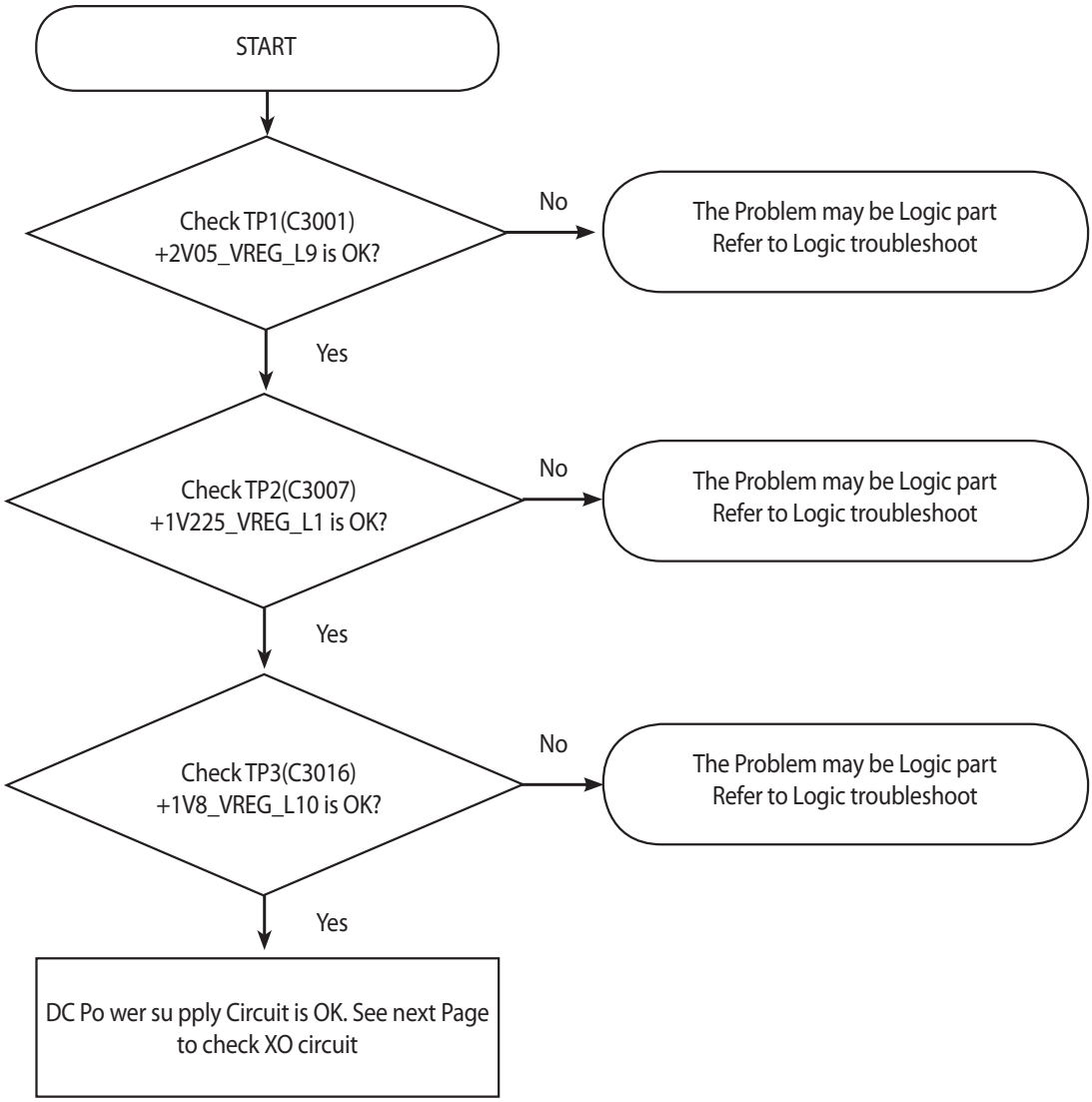

Copyright © 2014 LG Electronics. Inc. All right reserved.
Only for training and service purposes

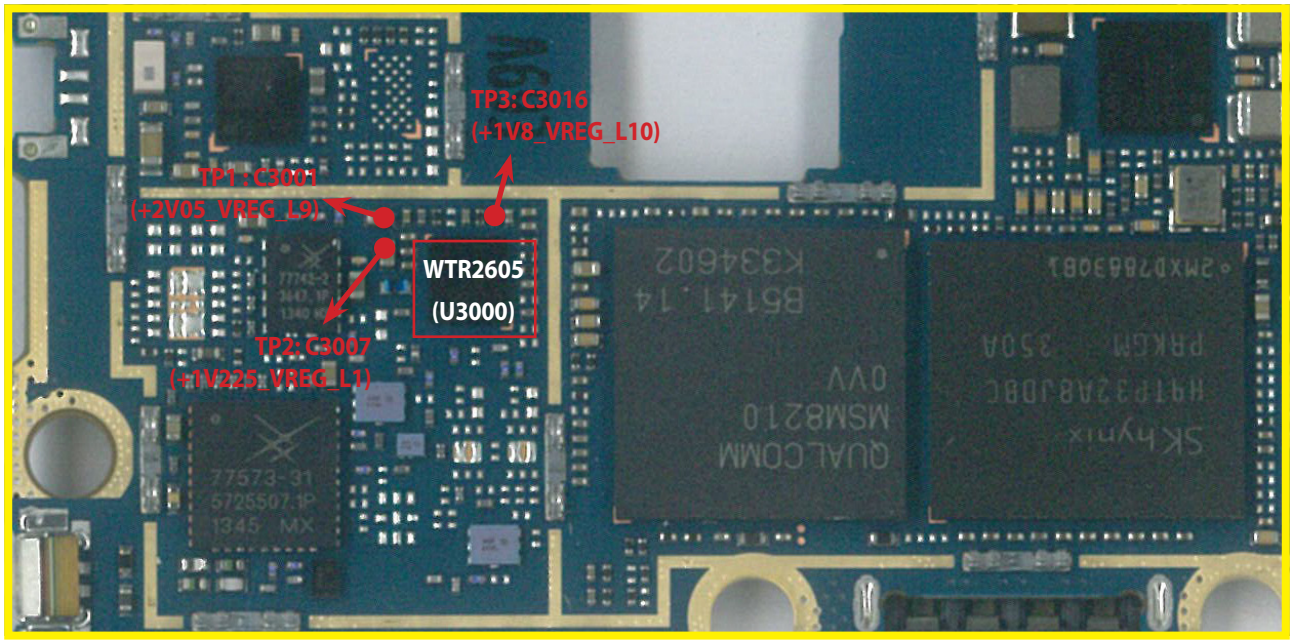

<Main Top>

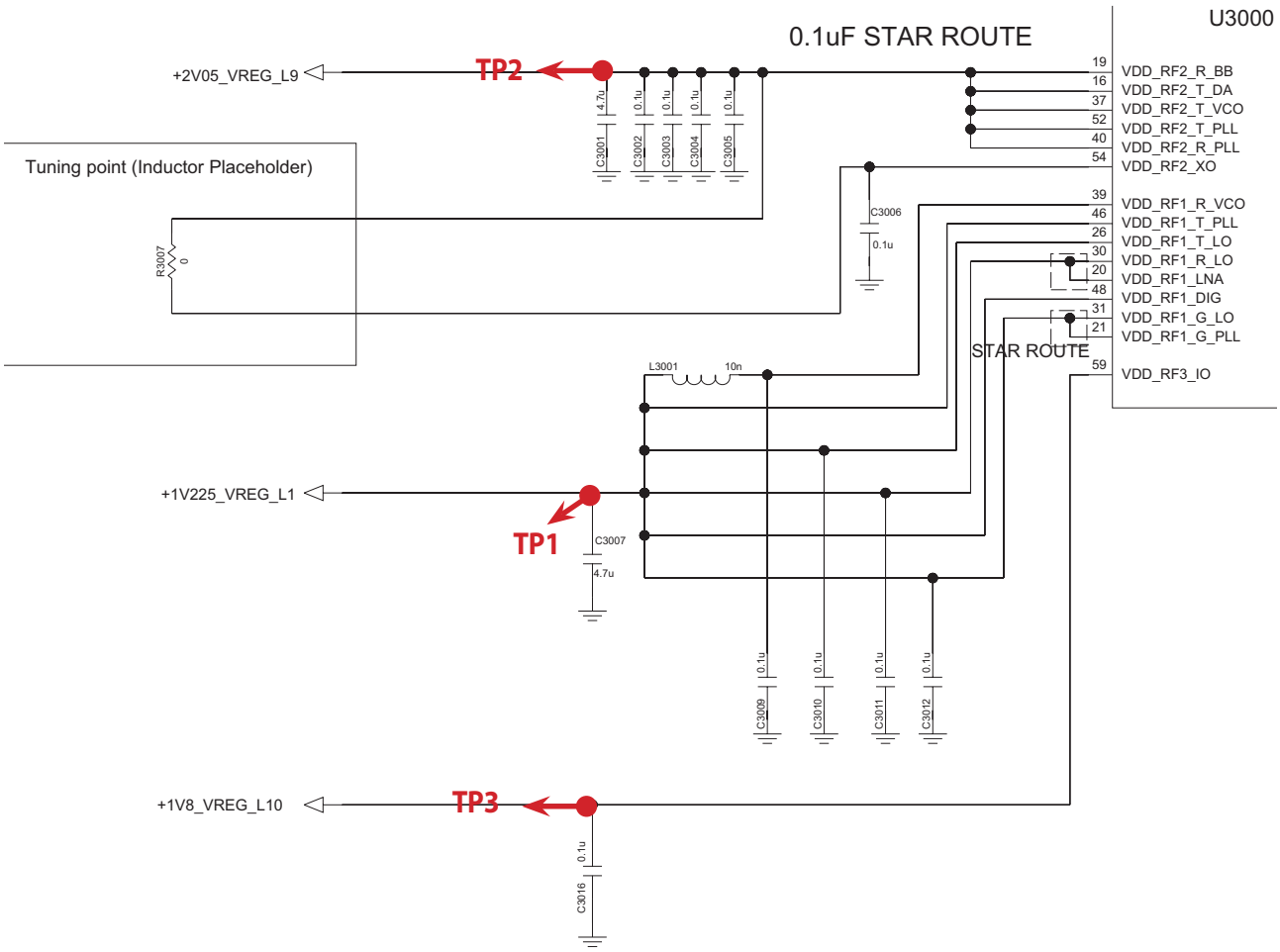

Copyright © 2014 LG Electronics. Inc. All right reserved.
Only for training and service purposes

3.3.2.2 Checking WTR2605 XO circuit

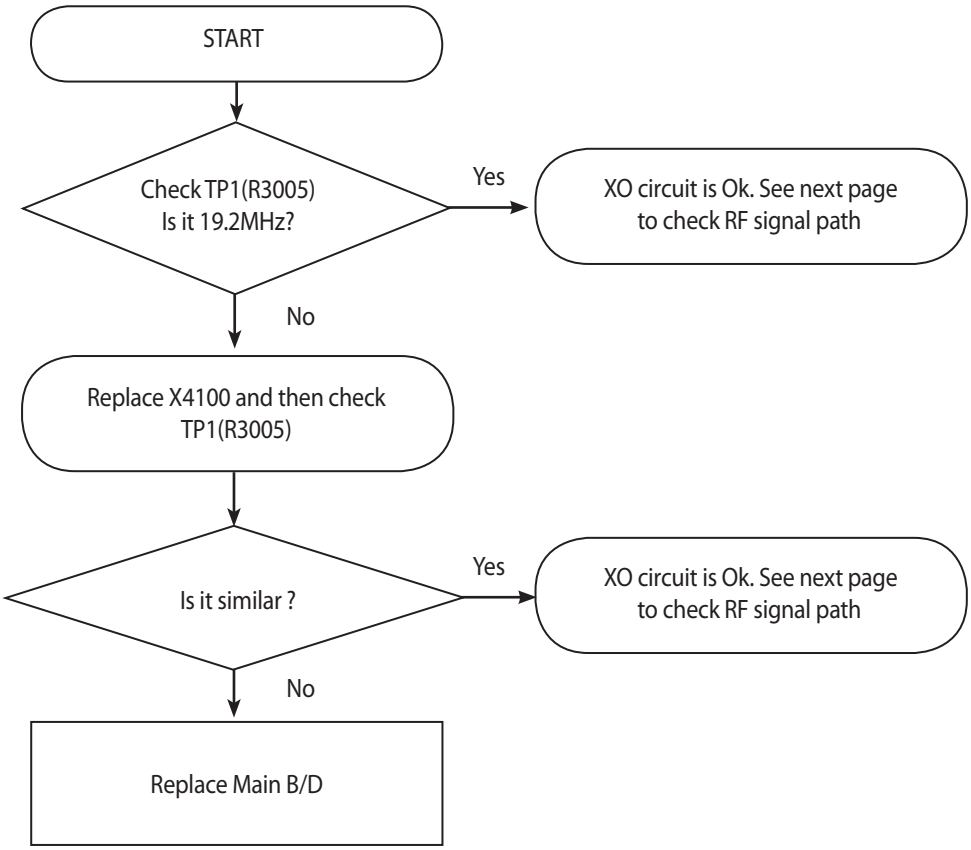

Copyright © 2014 LG Electronics. Inc. All right reserved.
Only for training and service purposes

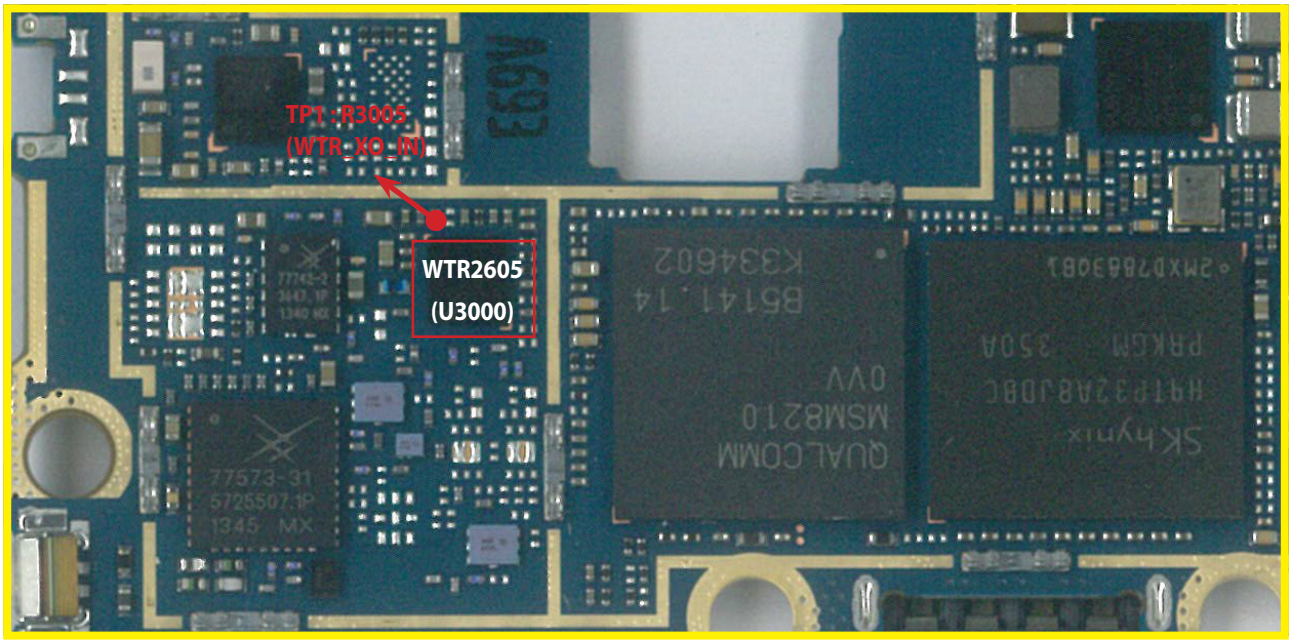

<Main Top>

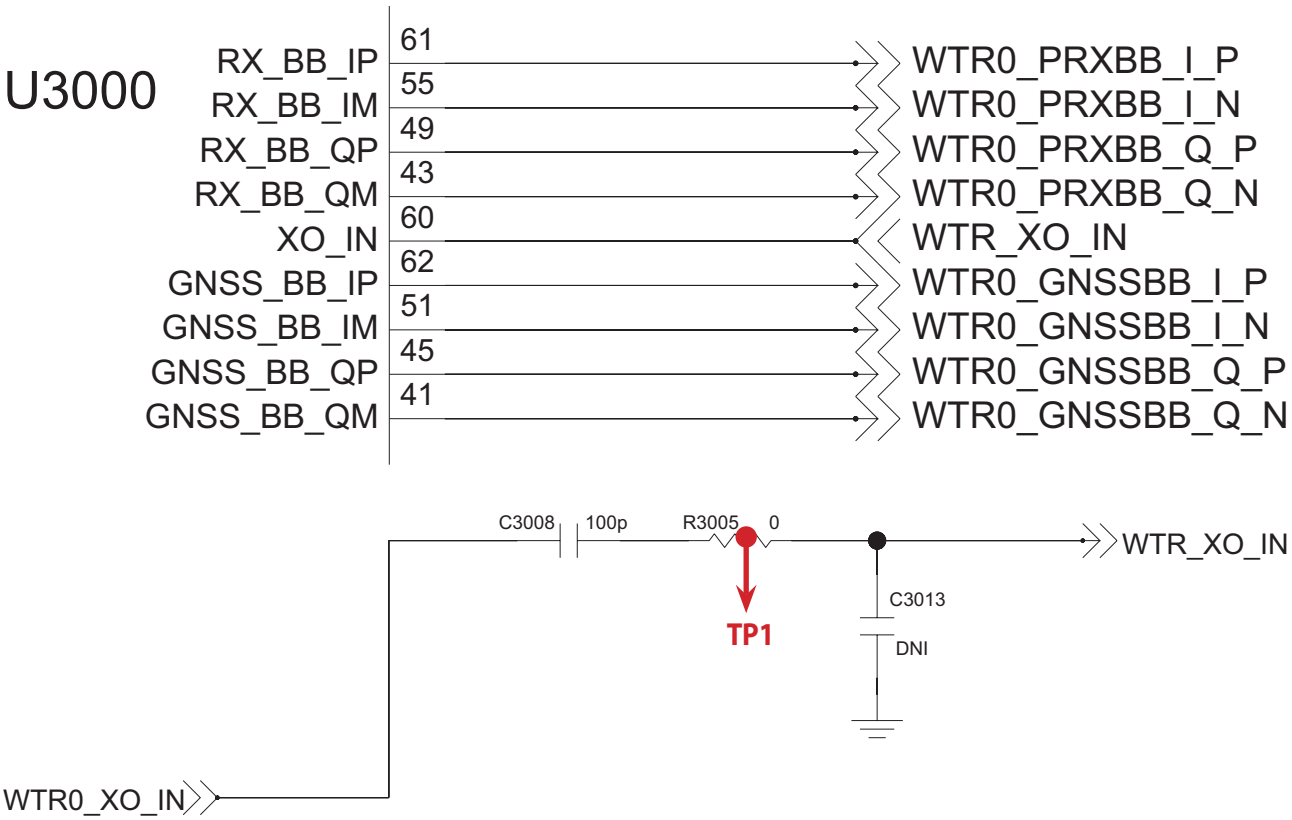

Copyright © 2014 LG Electronics. Inc. All right reserved.
Only for training and service purposes

3.3.2.3 Checking RF Signal Path (Tx Module)

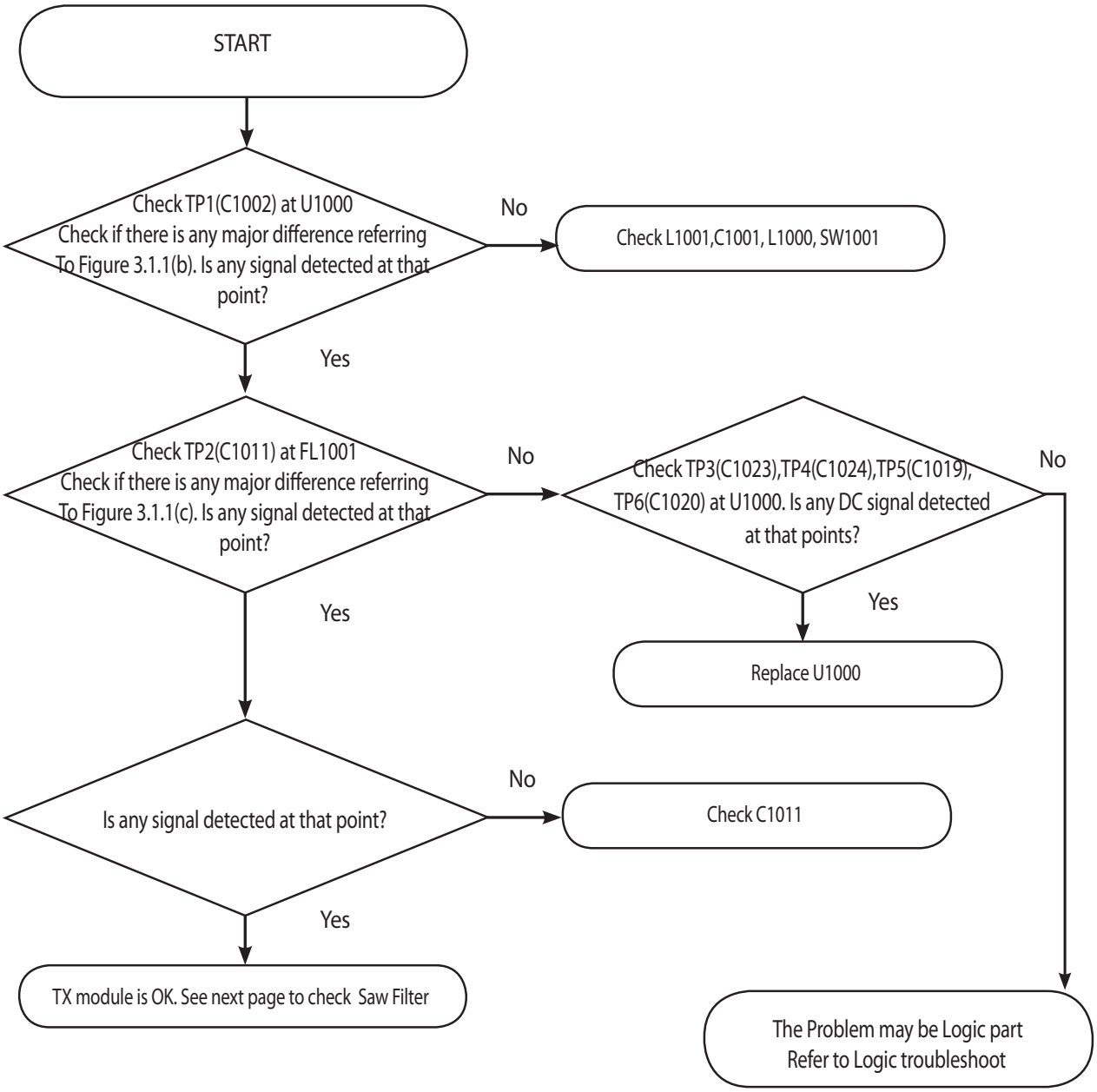

Copyright © 2014 LG Electronics. Inc. All right reserved.
Only for training and service purposes

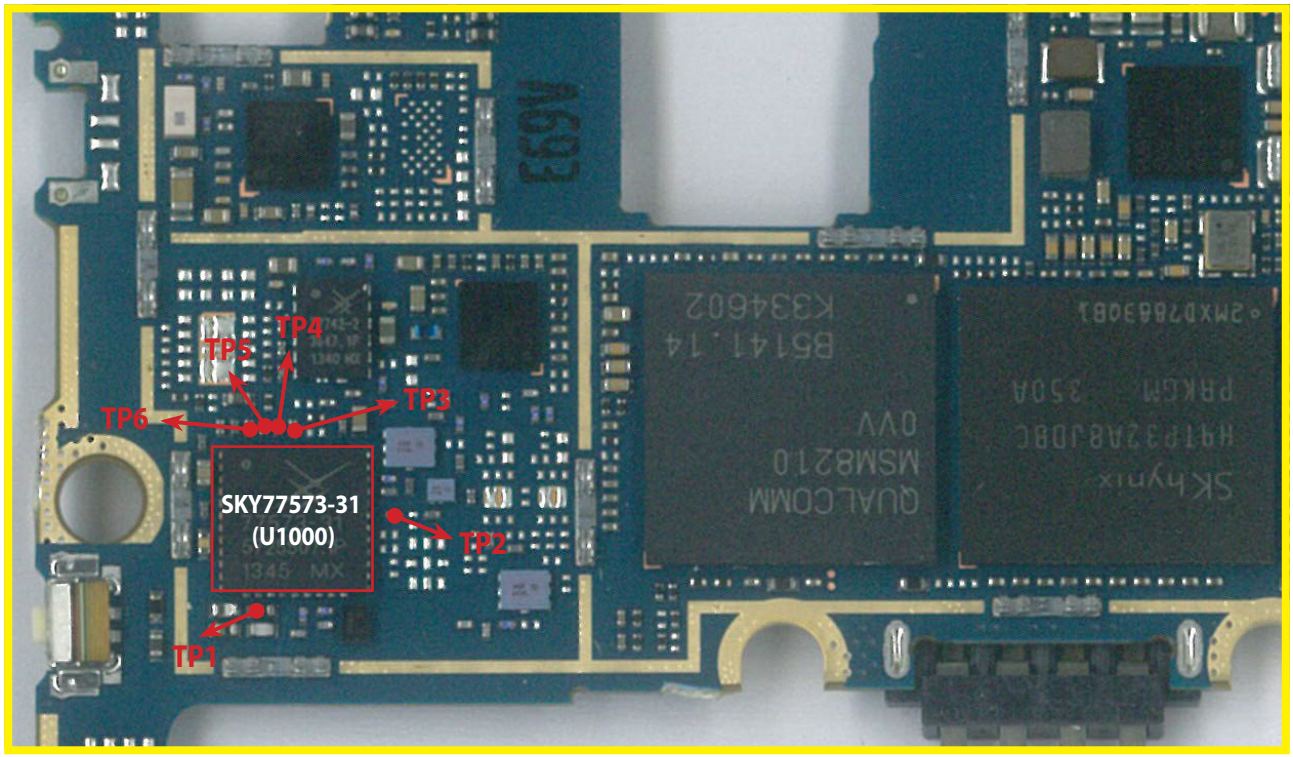

<Main Top>

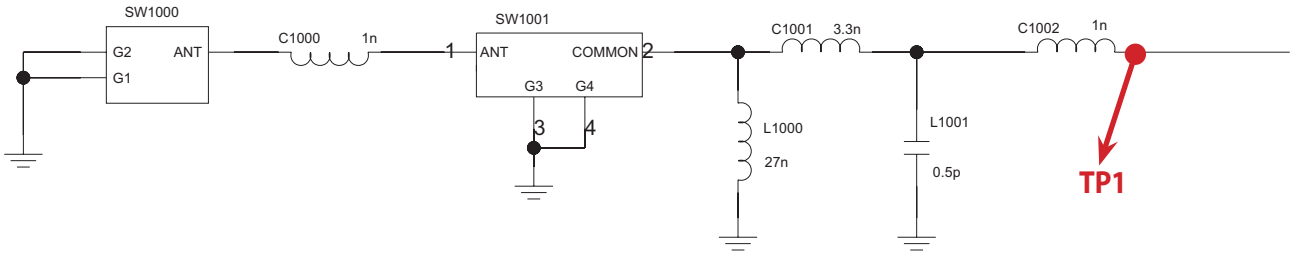

Copyright © 2014 LG Electronics. Inc. All right reserved.
Only for training and service purposes

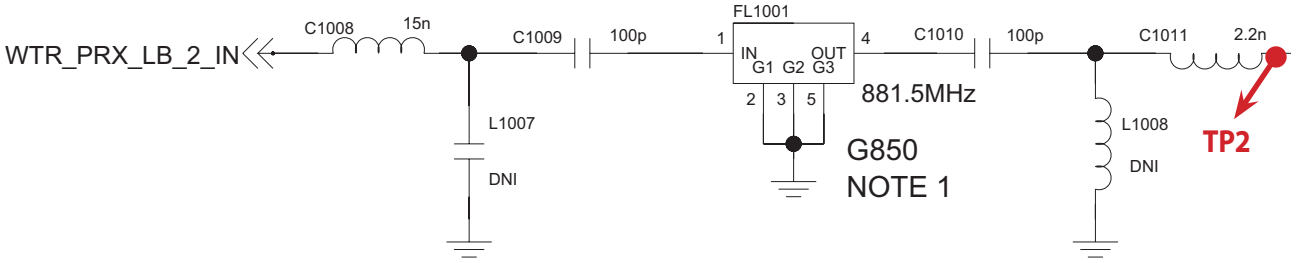

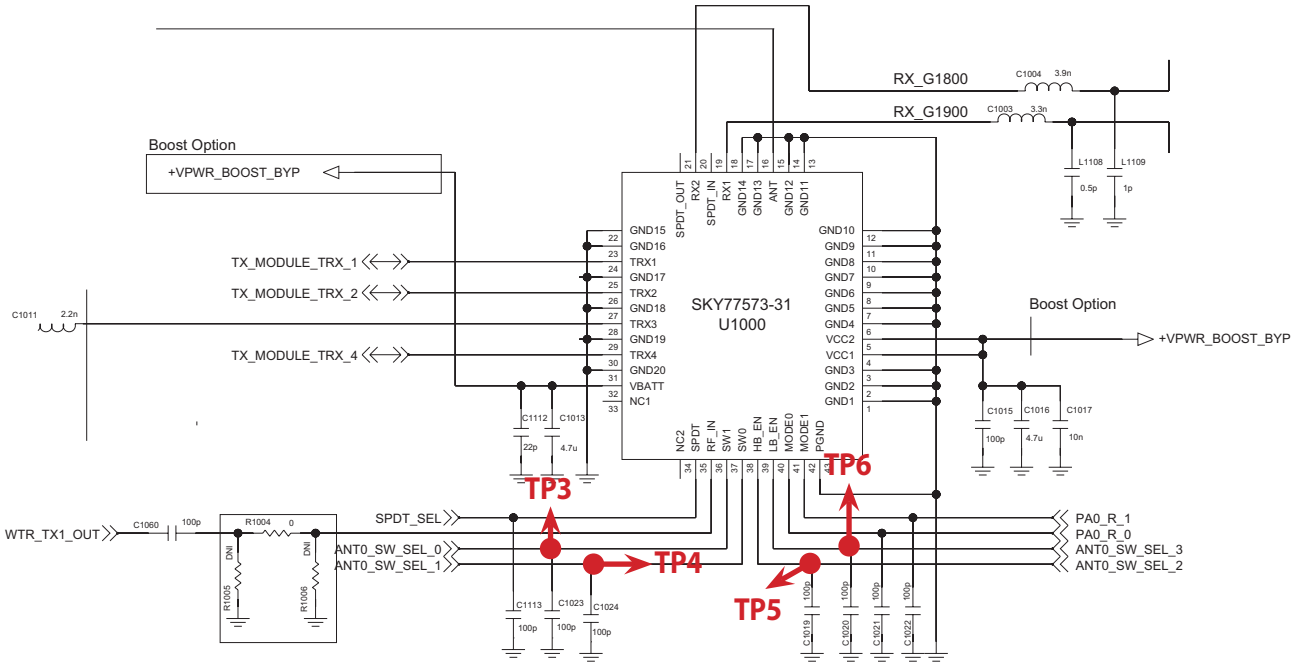

Copyright © 2014 LG Electronics. Inc. All right reserved.
Only for training and service purposes

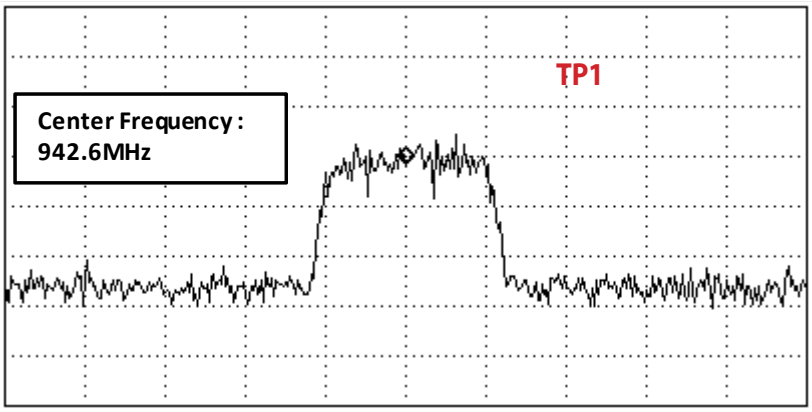

Figure 3.1.1 (b)

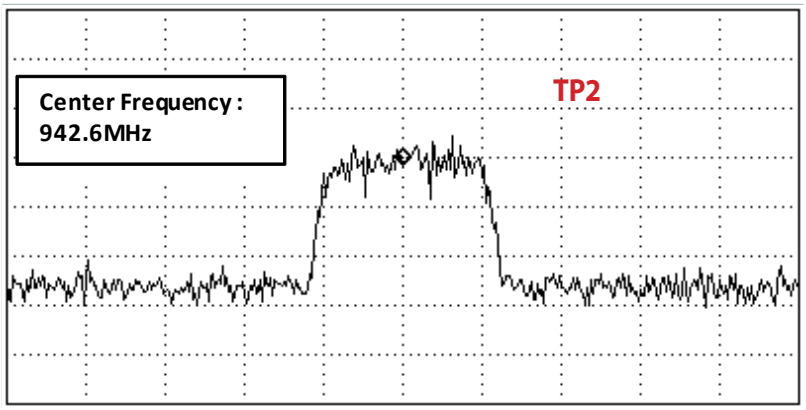

Figure 3.1.1 (c)

Copyright © 2014 LG Electronics. Inc. All right reserved.
Only for training and service purposes

3.3.2.4 Checking RF Signal Path (Saw Filter)

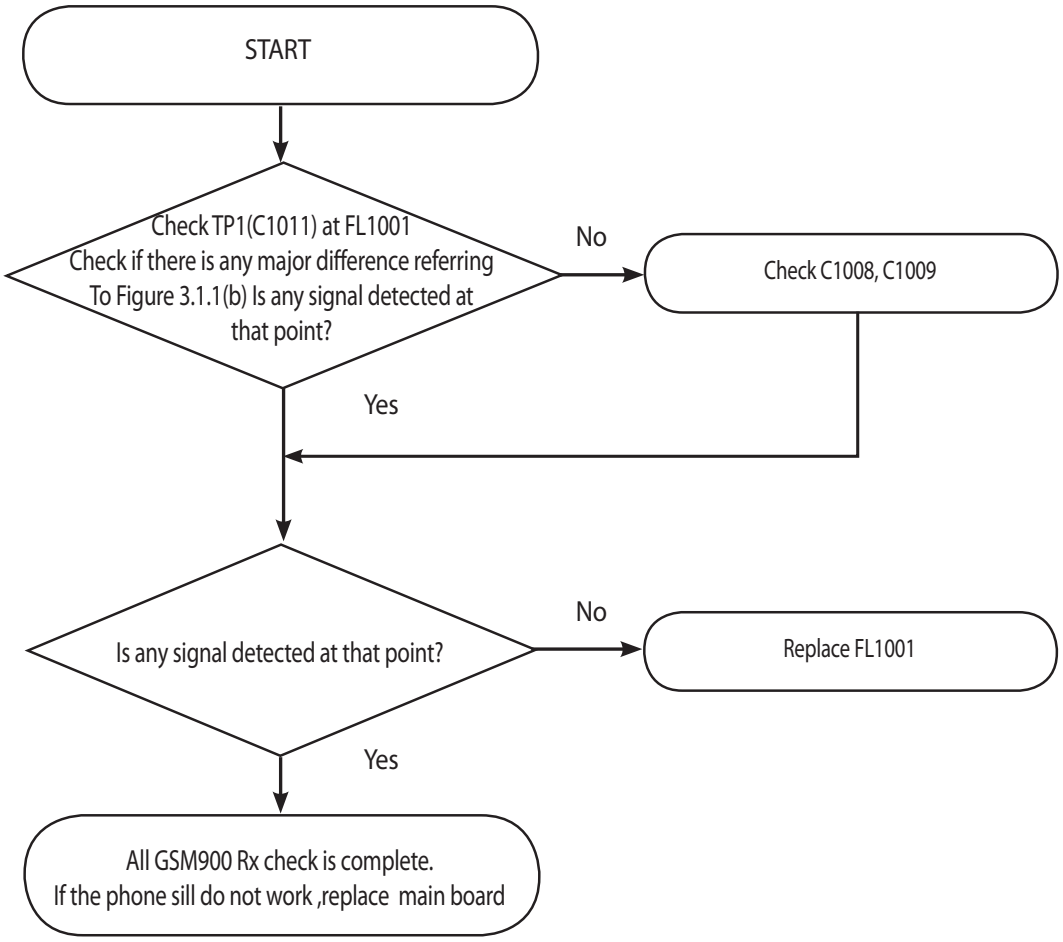

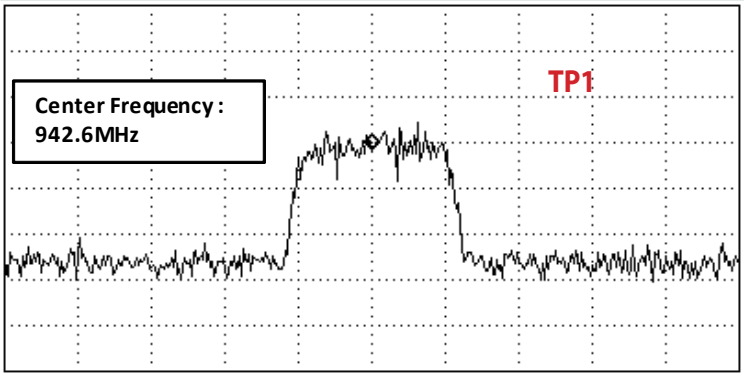

Figure 3.1.1 (b)

Copyright © 2014 LG Electronics. Inc. All right reserved.
Only for training and service purposes

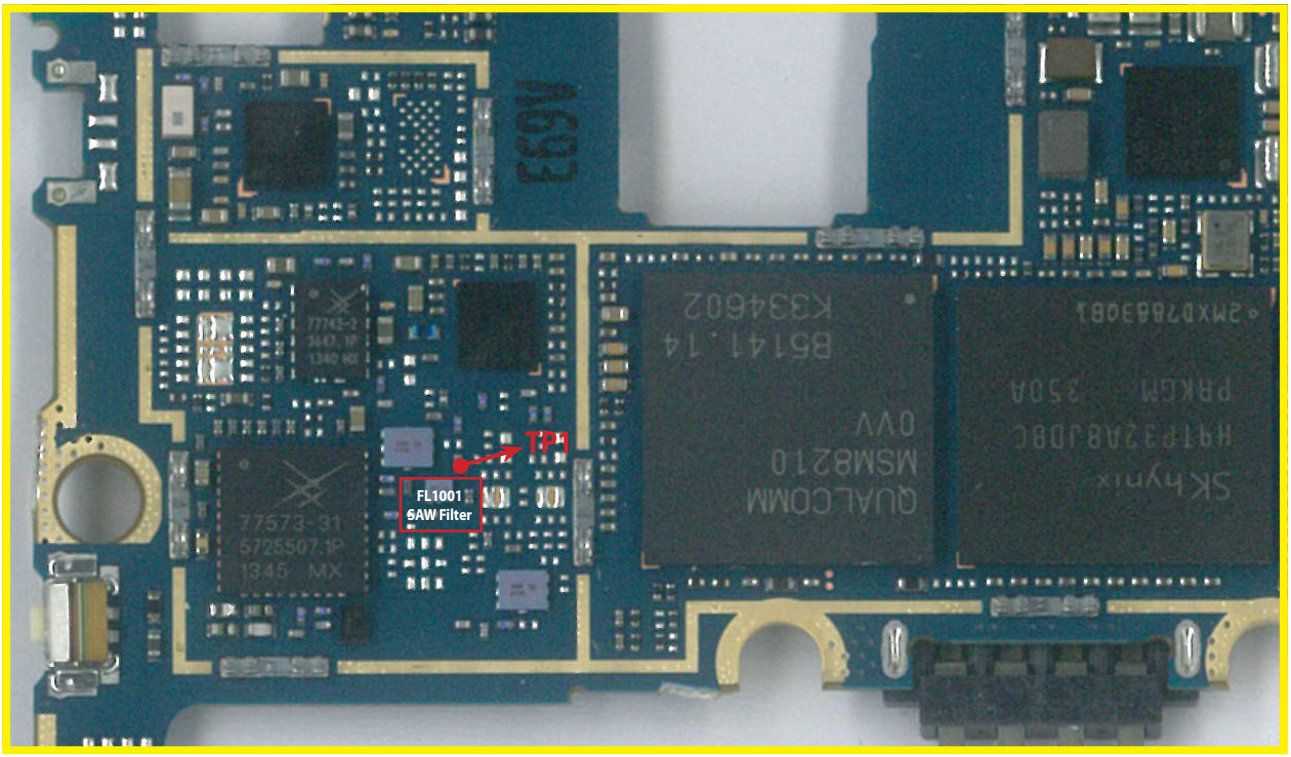

<Main Top>

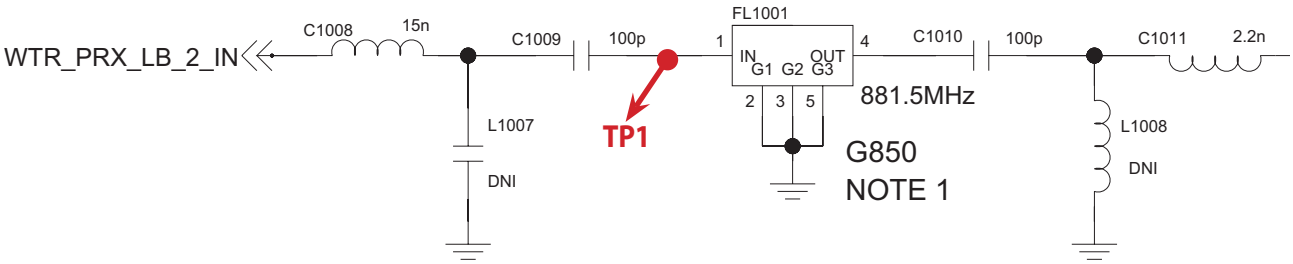

Copyright © 2014 LG Electronics. Inc. All right reserved.
Only for training and service purposes

3.3.3 GSM1800/1900 Rx

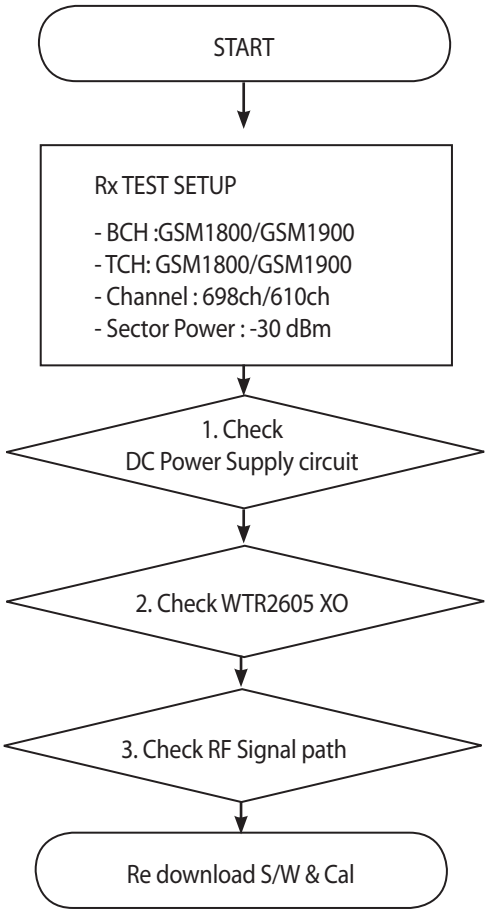

* There are no Test Points on the IQ Data Line. So It is impossible to check the IQ Data Wave form

Copyright © 2014 LG Electronics. Inc. All right reserved.
Only for training and service purposes

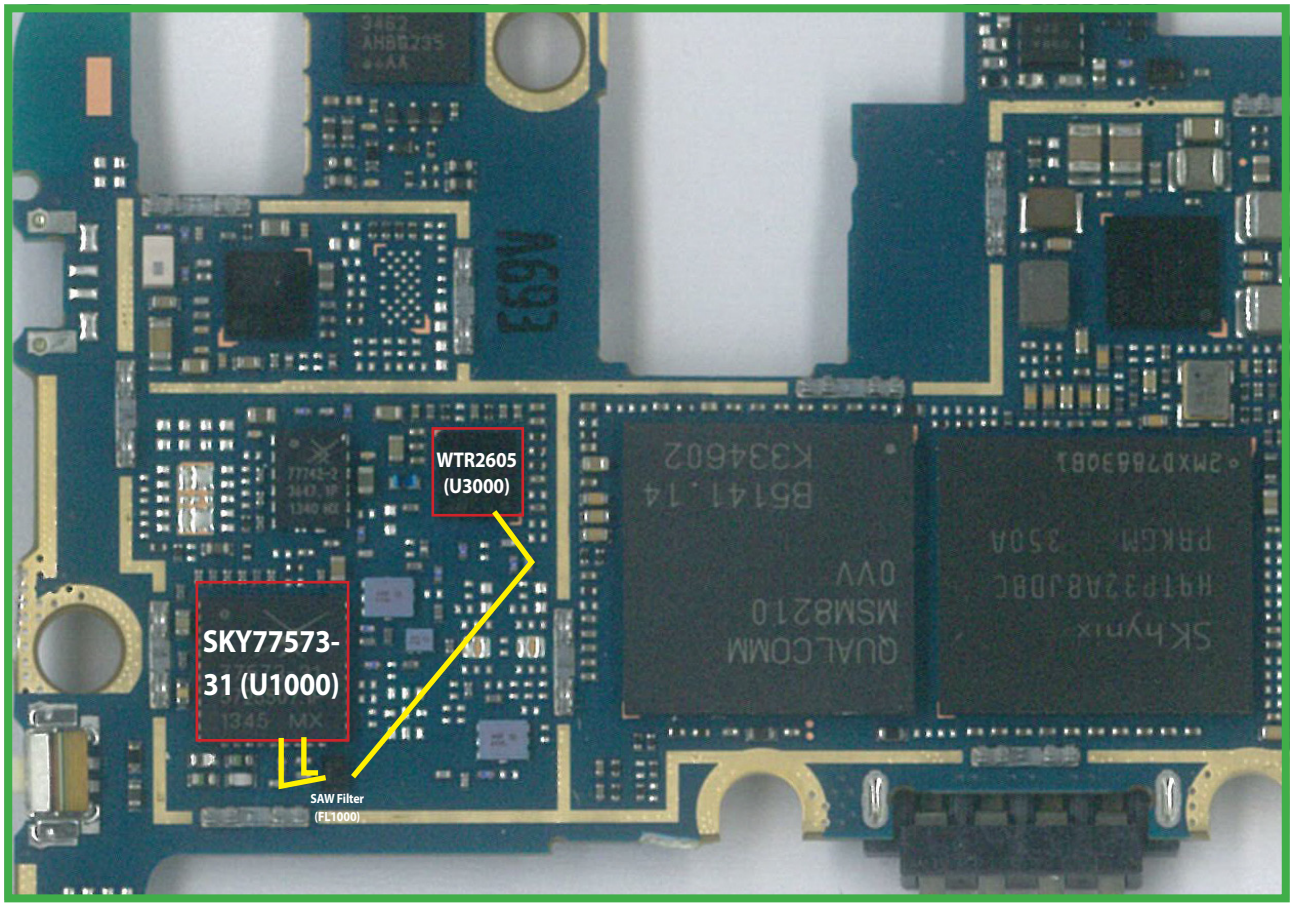

<Main Top>

Copyright © 2014 LG Electronics. Inc. All right reserved.
Only for training and service purposes

3.3.3.1 Checking DC Power supply circuit

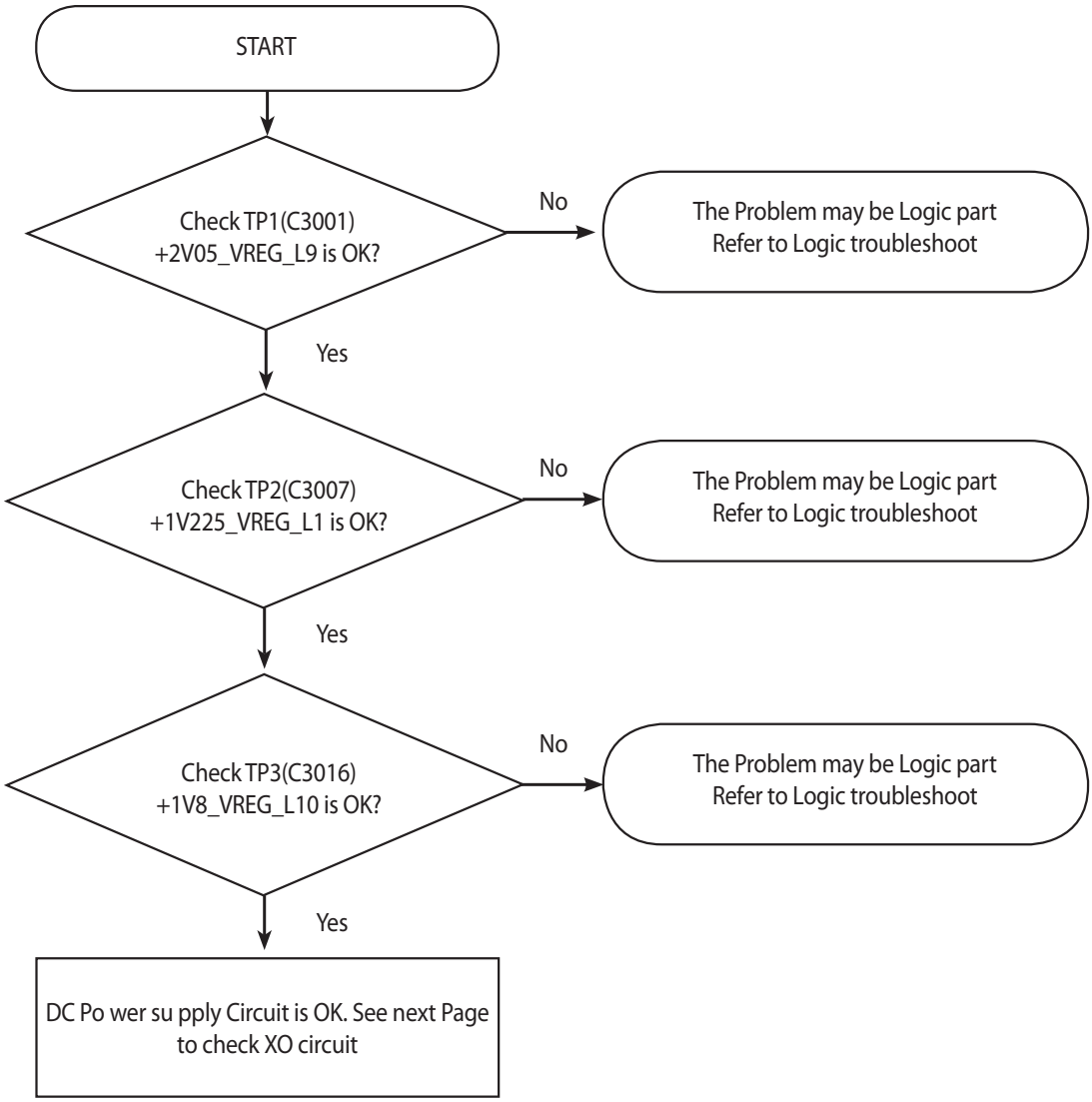

Copyright © 2014 LG Electronics. Inc. All right reserved.
Only for training and service purposes

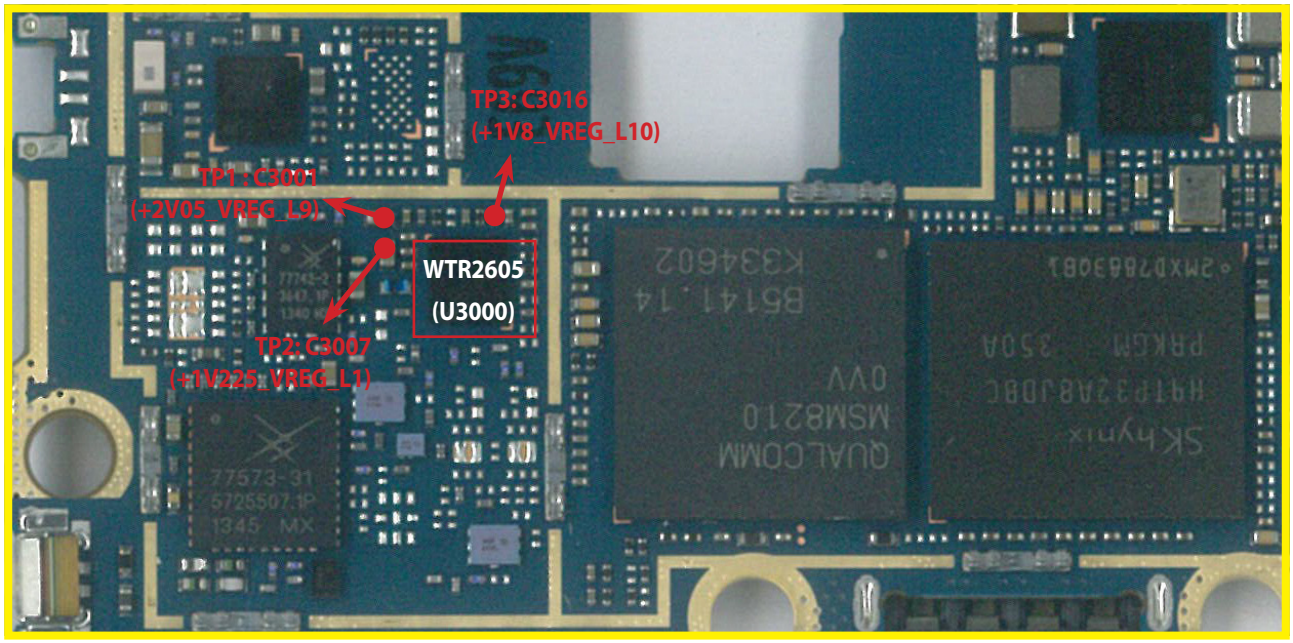

<Main Top>

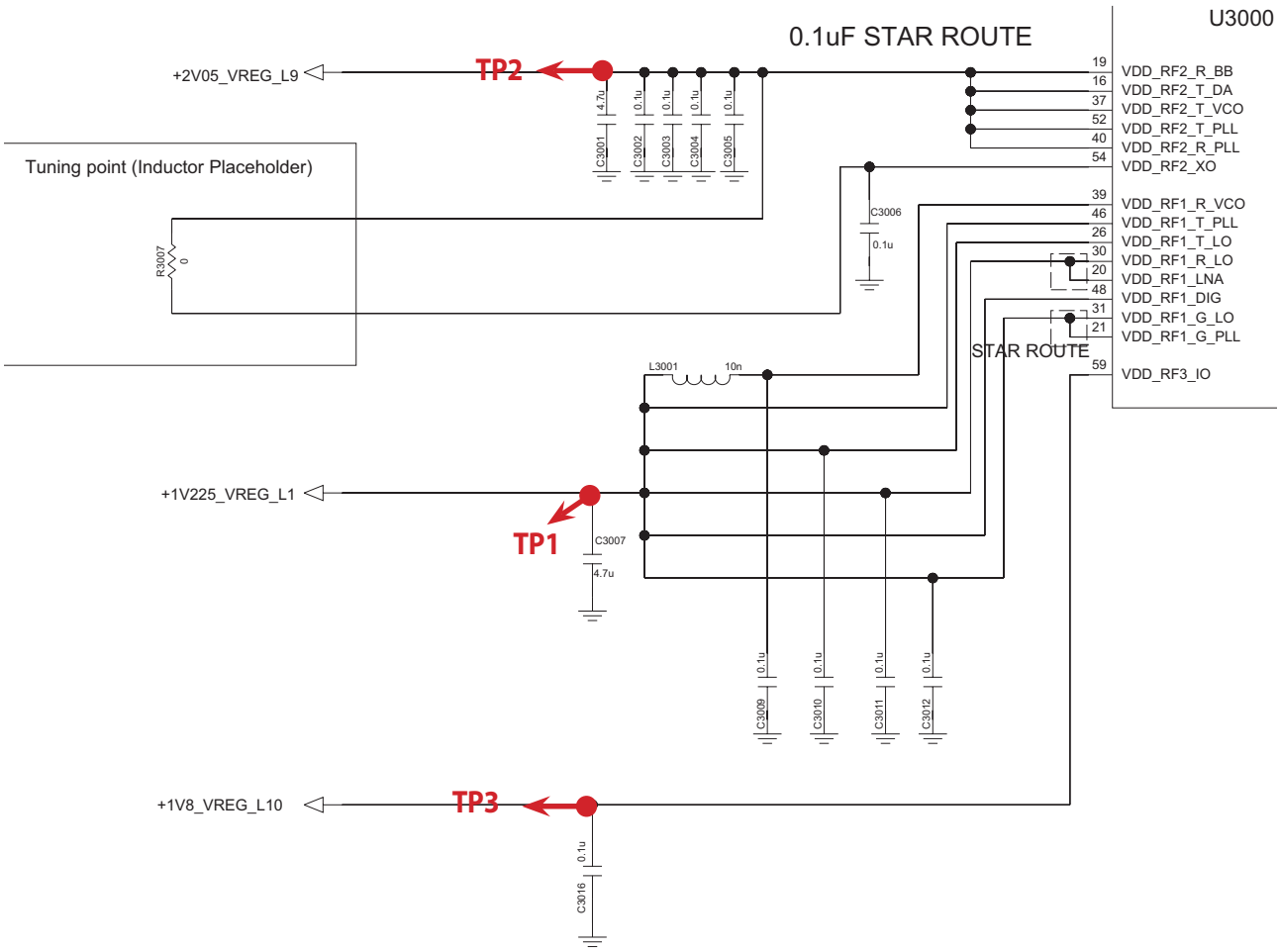

Copyright © 2014 LG Electronics. Inc. All right reserved.
Only for training and service purposes

3.3.3.2 Checking WTR2605 XO circuit

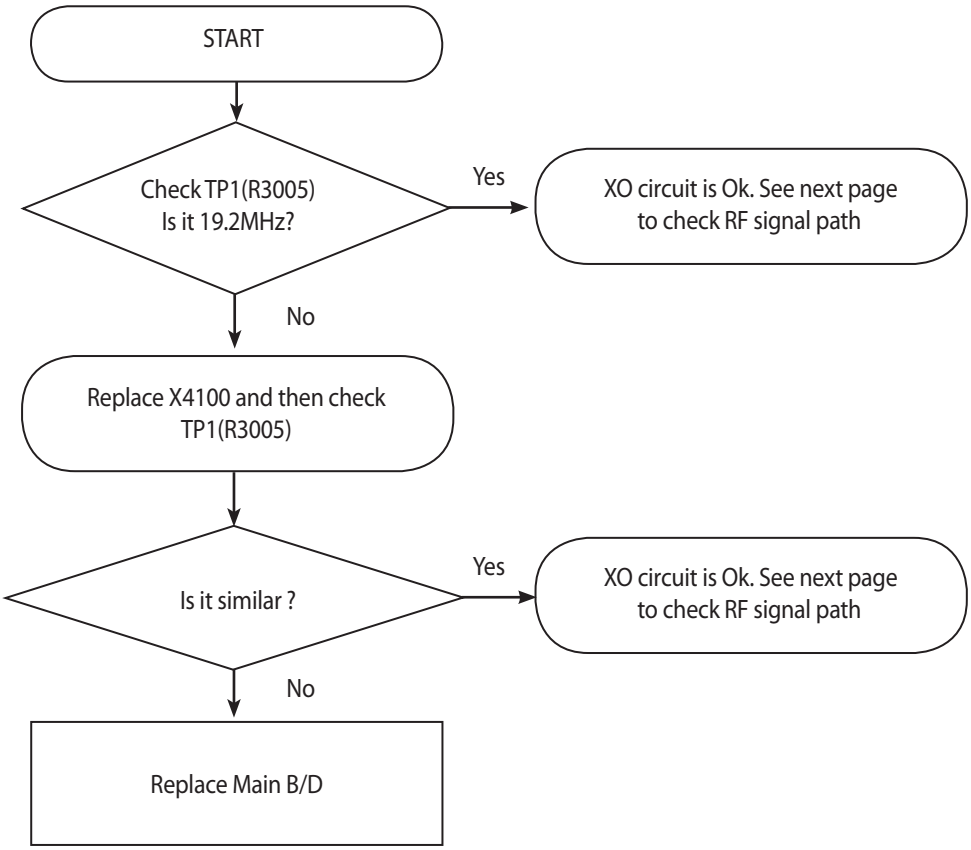

Copyright © 2014 LG Electronics. Inc. All right reserved.
Only for training and service purposes

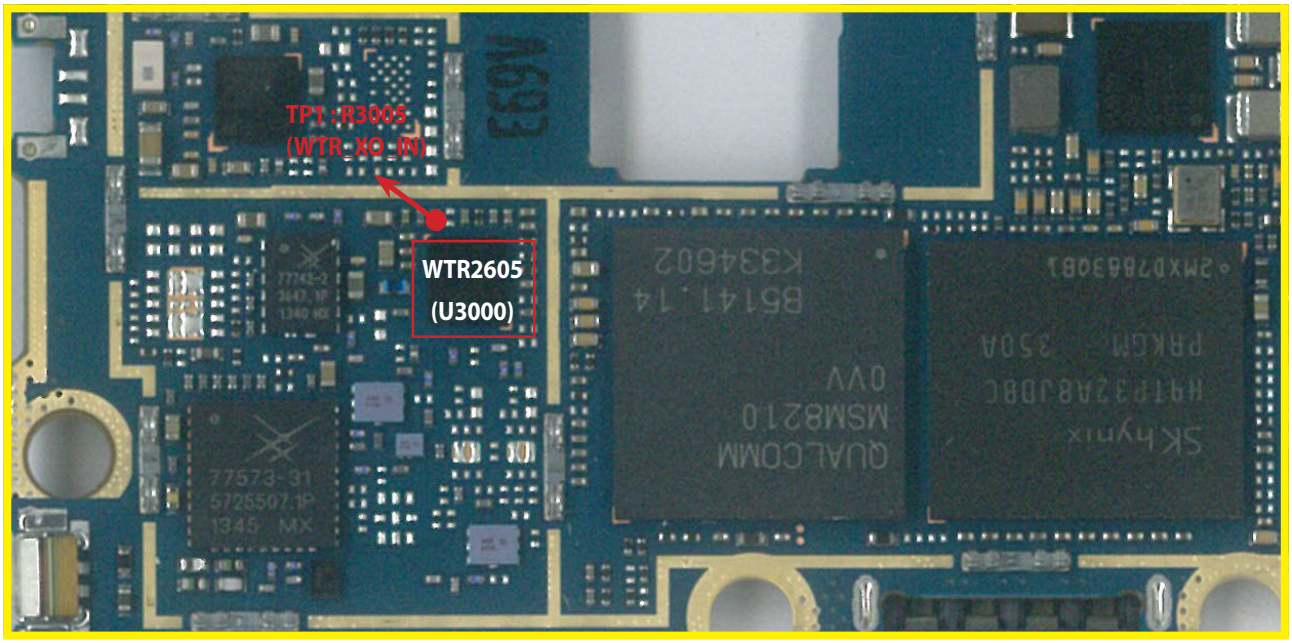

<Main Top>

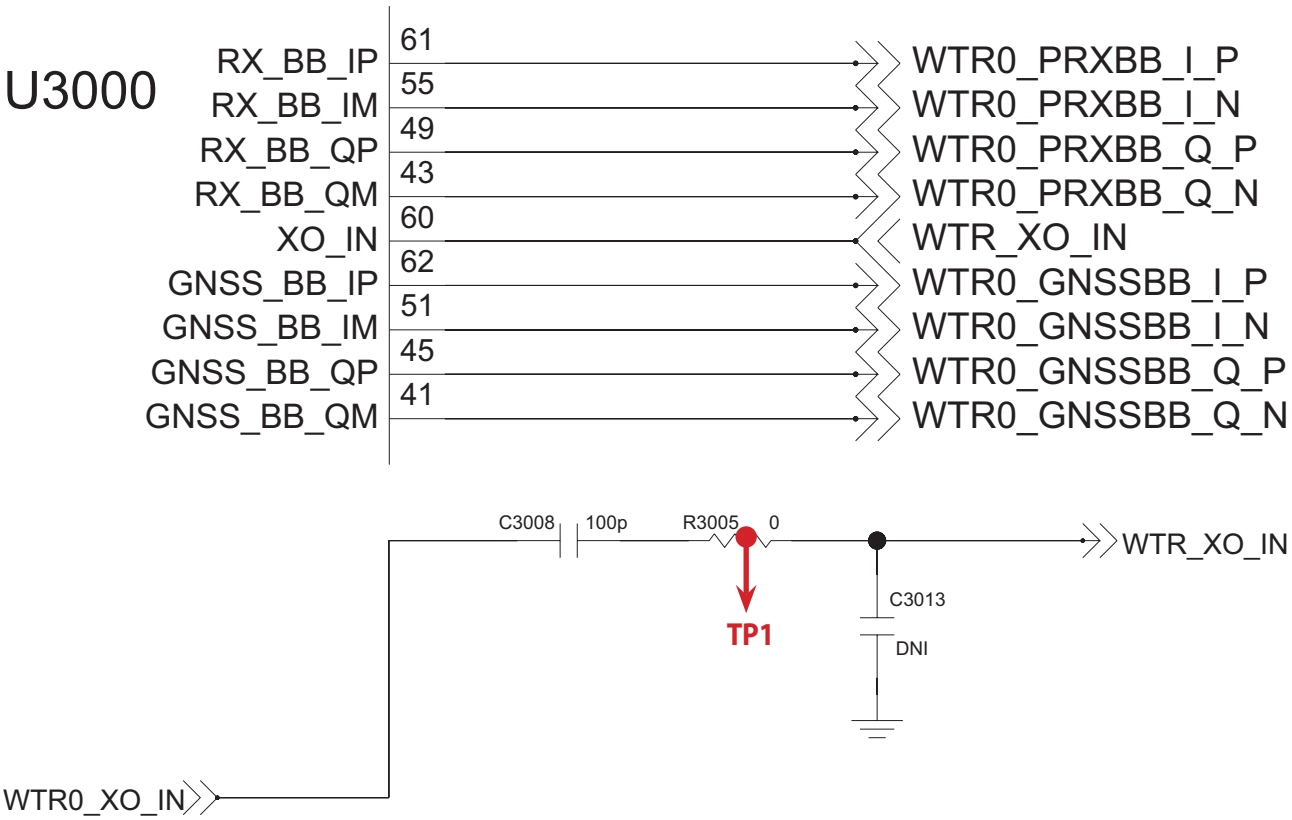

Copyright © 2014 LG Electronics. Inc. All right reserved.
Only for training and service purposes

3.3.3.3 Checking RF Signal Path (Tx Module)

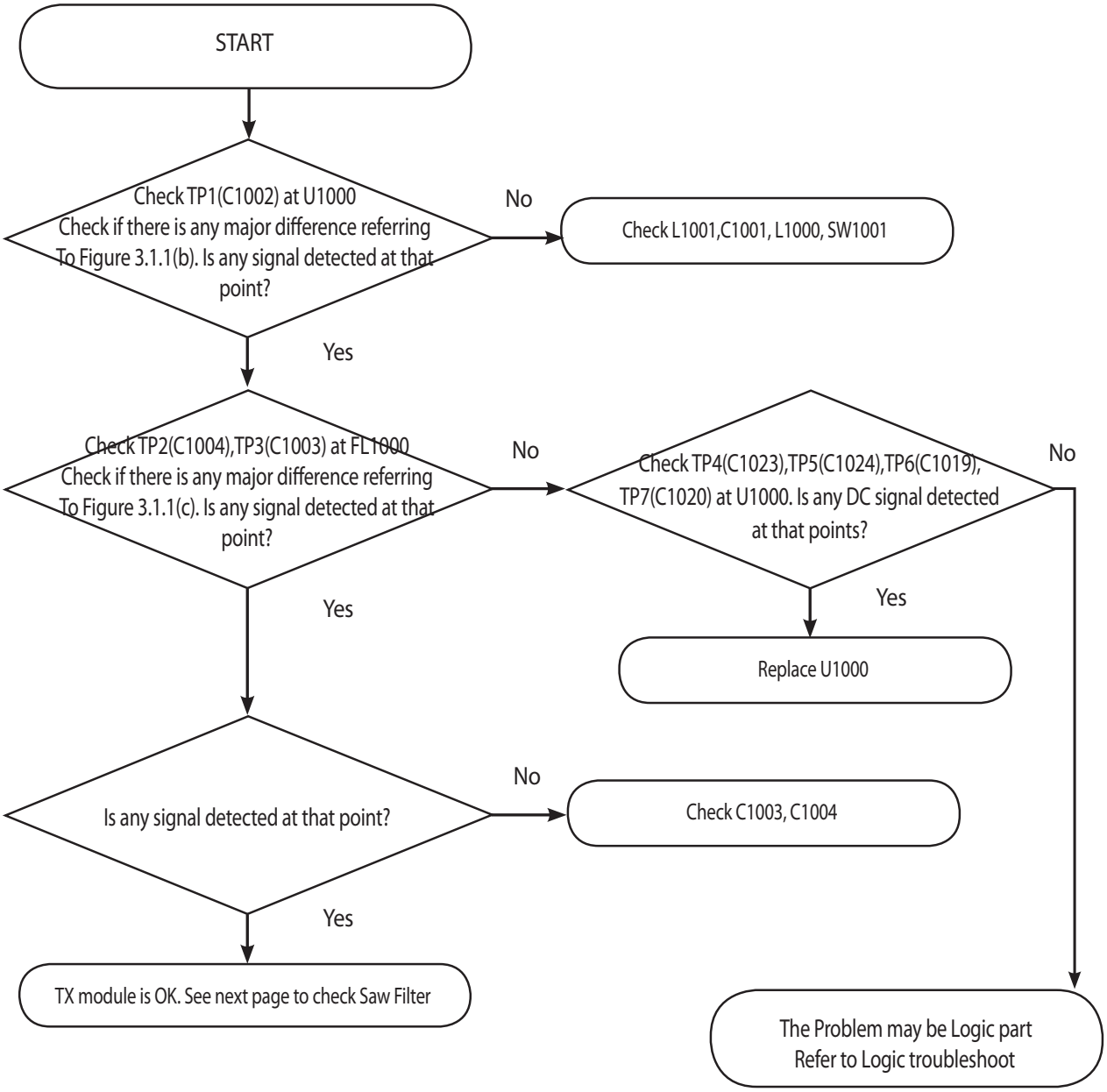

Copyright © 2014 LG Electronics. Inc. All right reserved.
Only for training and service purposes

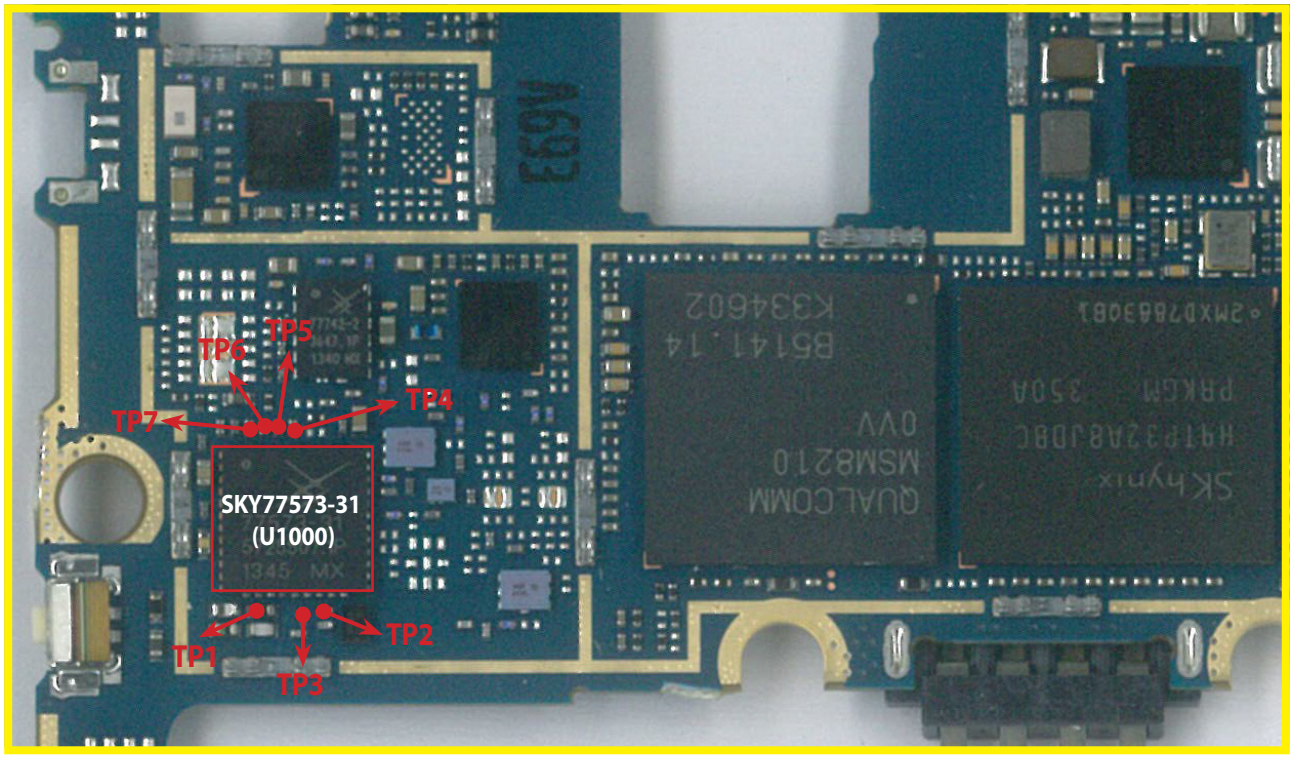

<Main Top>

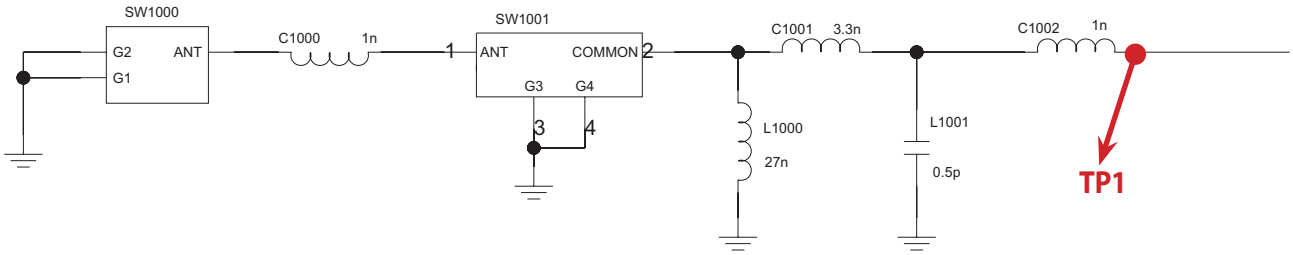

Copyright © 2014 LG Electronics. Inc. All right reserved.
Only for training and service purposes

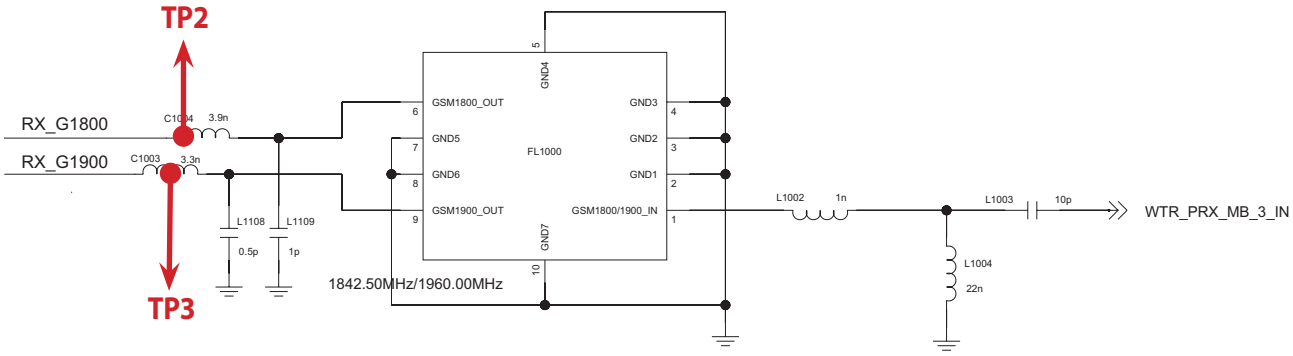

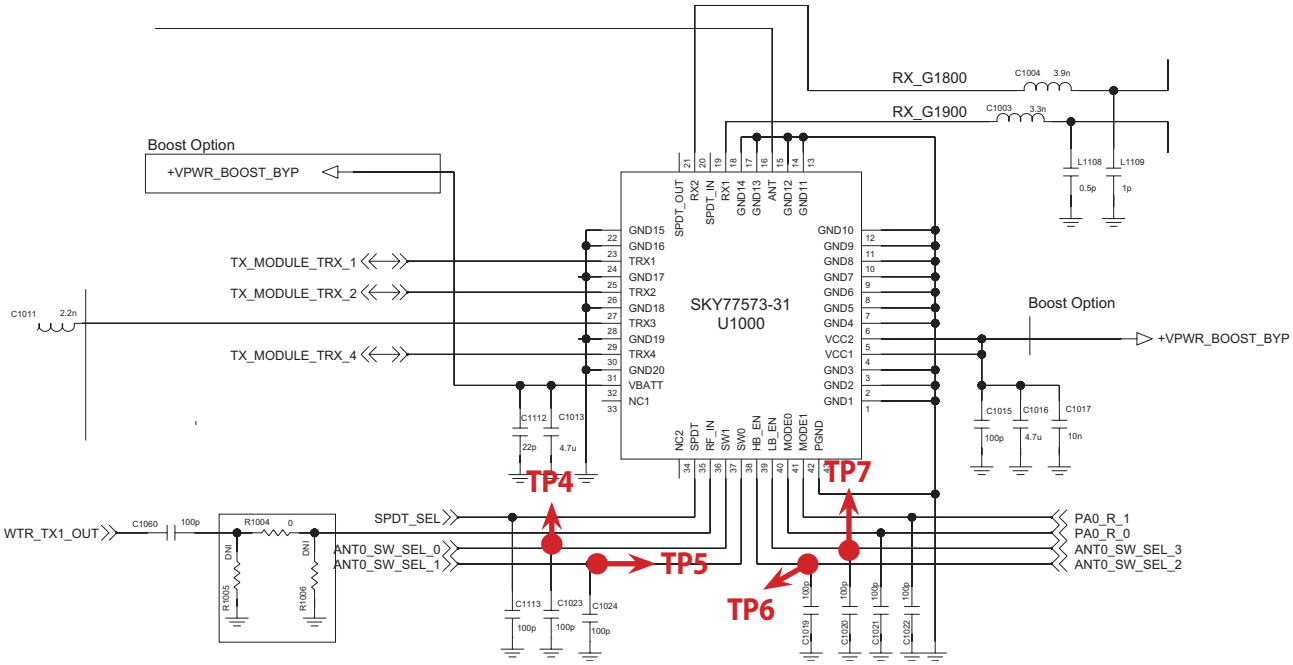

Copyright © 2014 LG Electronics. Inc. All right reserved.
Only for training and service purposes

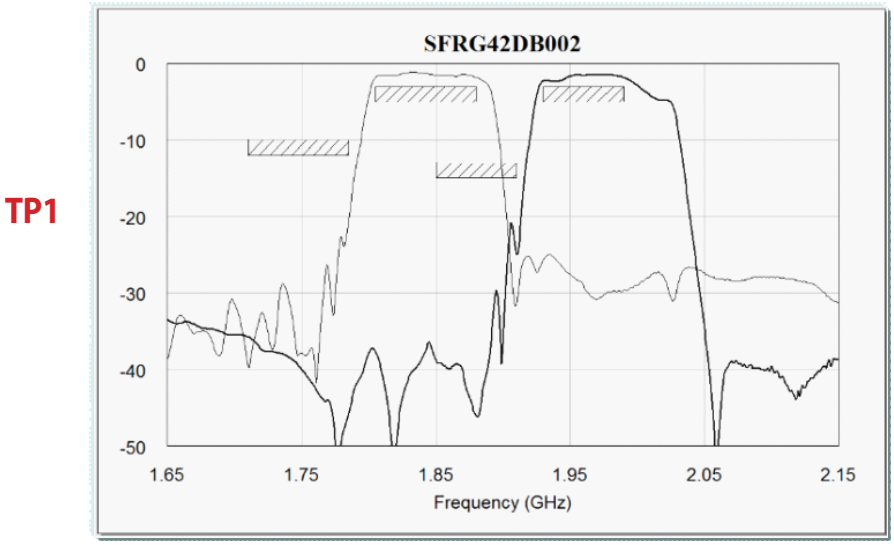

Figure 3.1.1 (b)

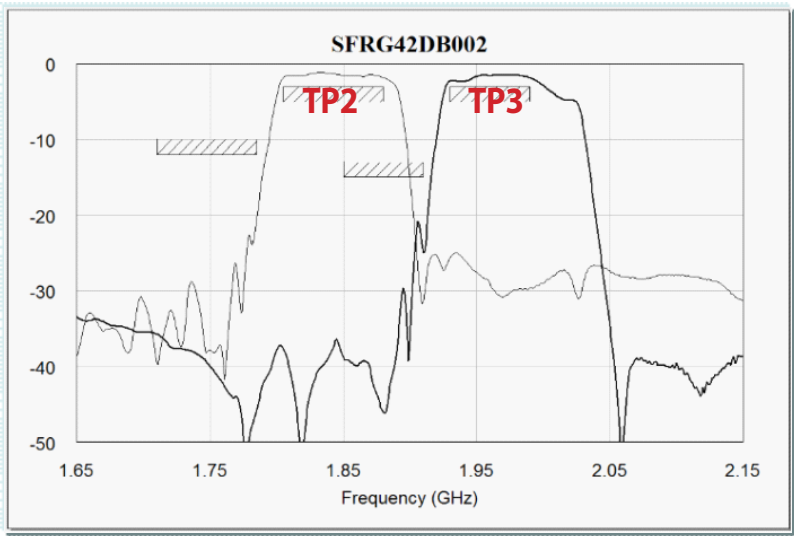

Figure 3.1.1 (c)

Copyright © 2014 LG Electronics. Inc. All right reserved.
Only for training and service purposes

3.3.3.4 Checking RF Flow(SAW filter)

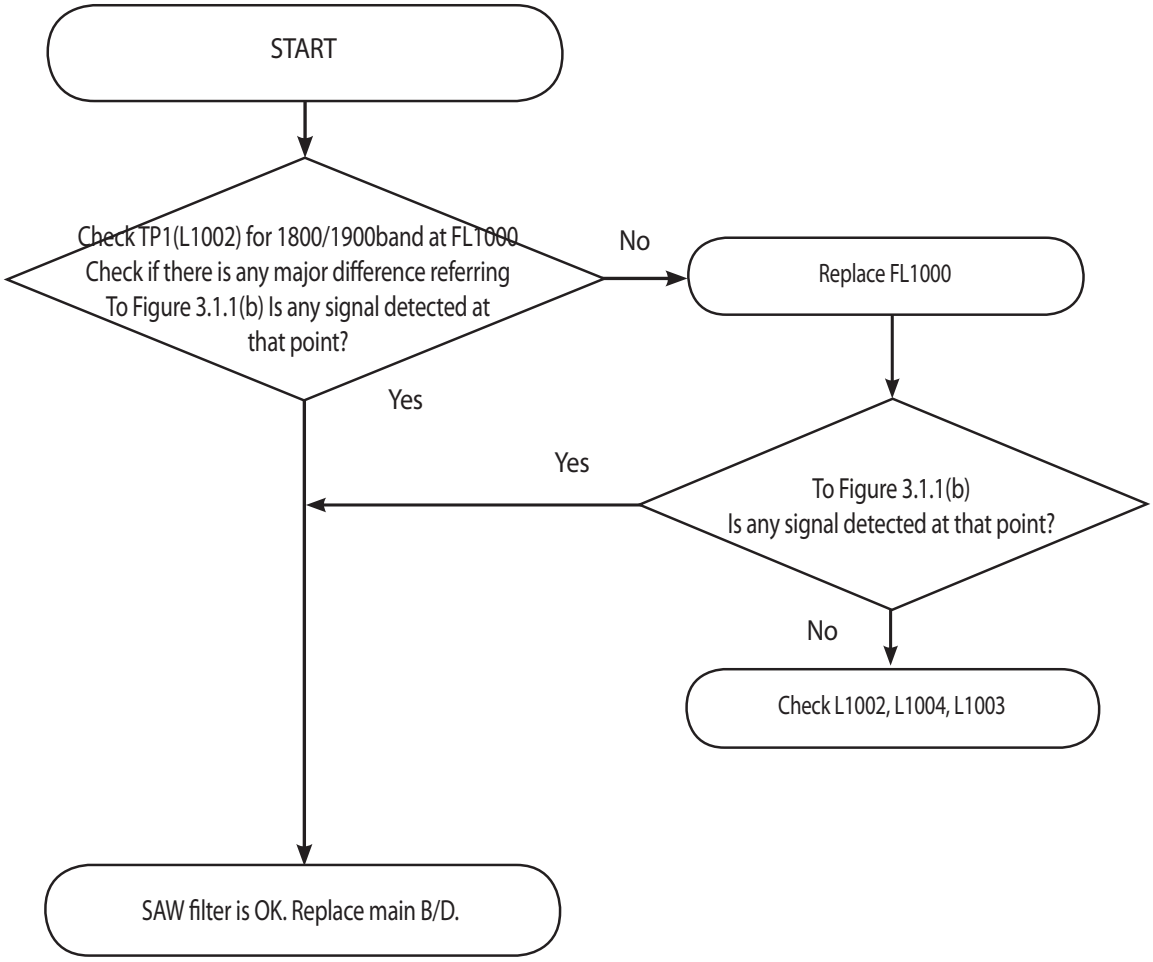

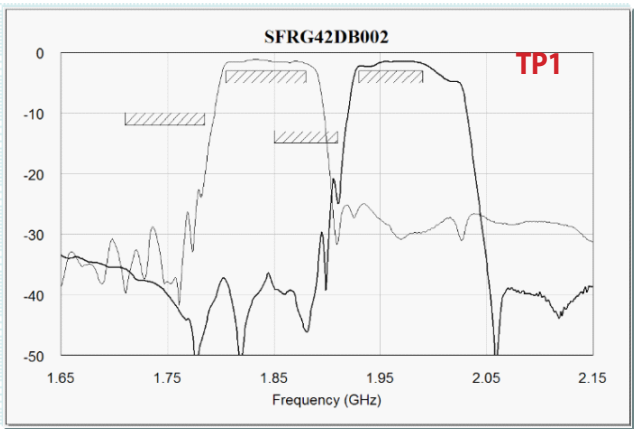

Figure 3.1.1 (b)

Copyright © 2014 LG Electronics. Inc. All right reserved.
Only for training and service purposes

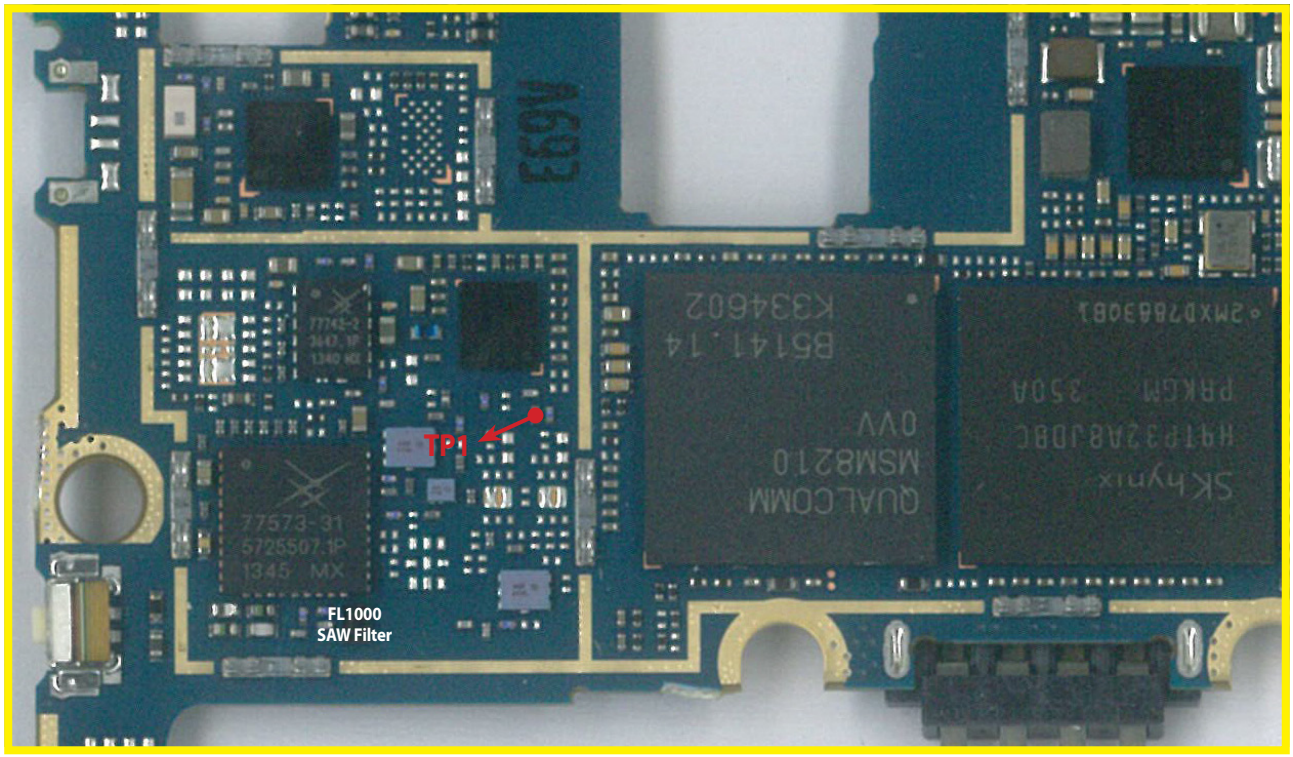

<Main Top>

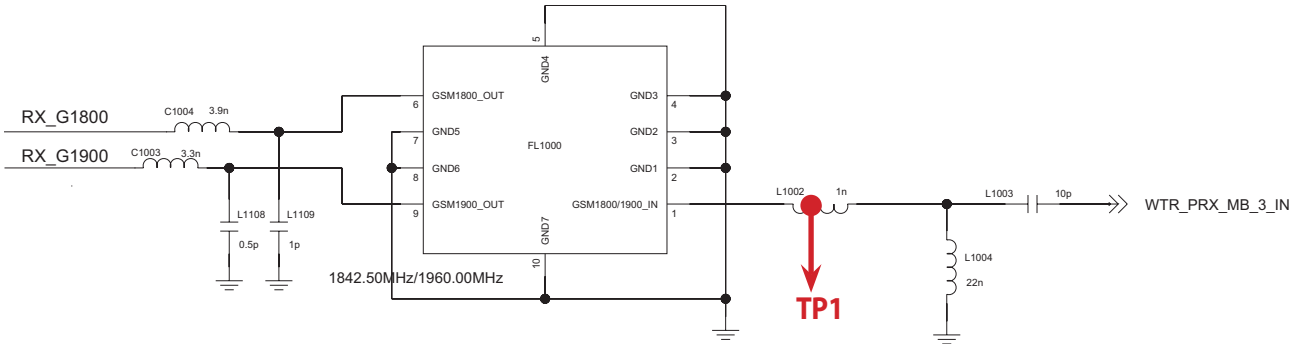

Copyright © 2014 LG Electronics. Inc. All right reserved.
Only for training and service purposes

3.4 GSM Tx Part Troubleshooting

3.4.1 GSM850/900/1800/1900 Tx

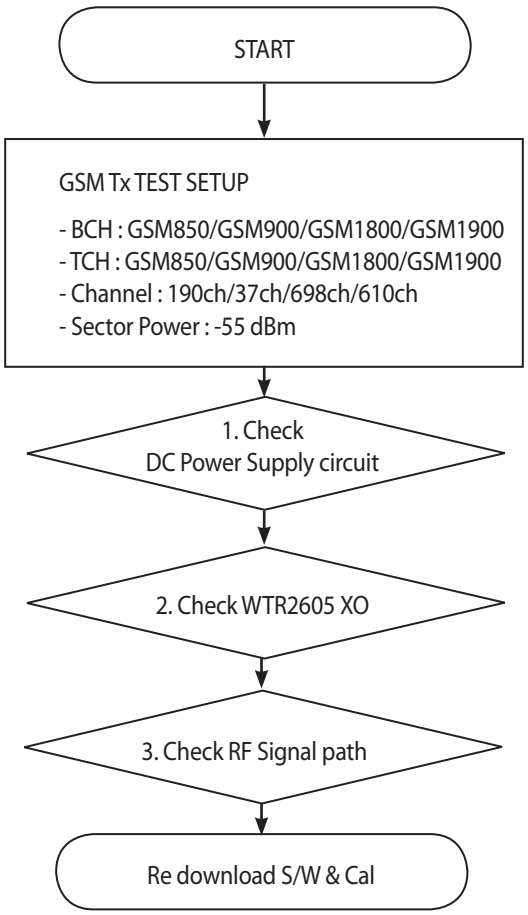

* There are no Test Points on the IQ Data Line. So It is impossible to check the IQ Data Wave form

Copyright © 2014 LG Electronics. Inc. All right reserved.
Only for training and service purposes

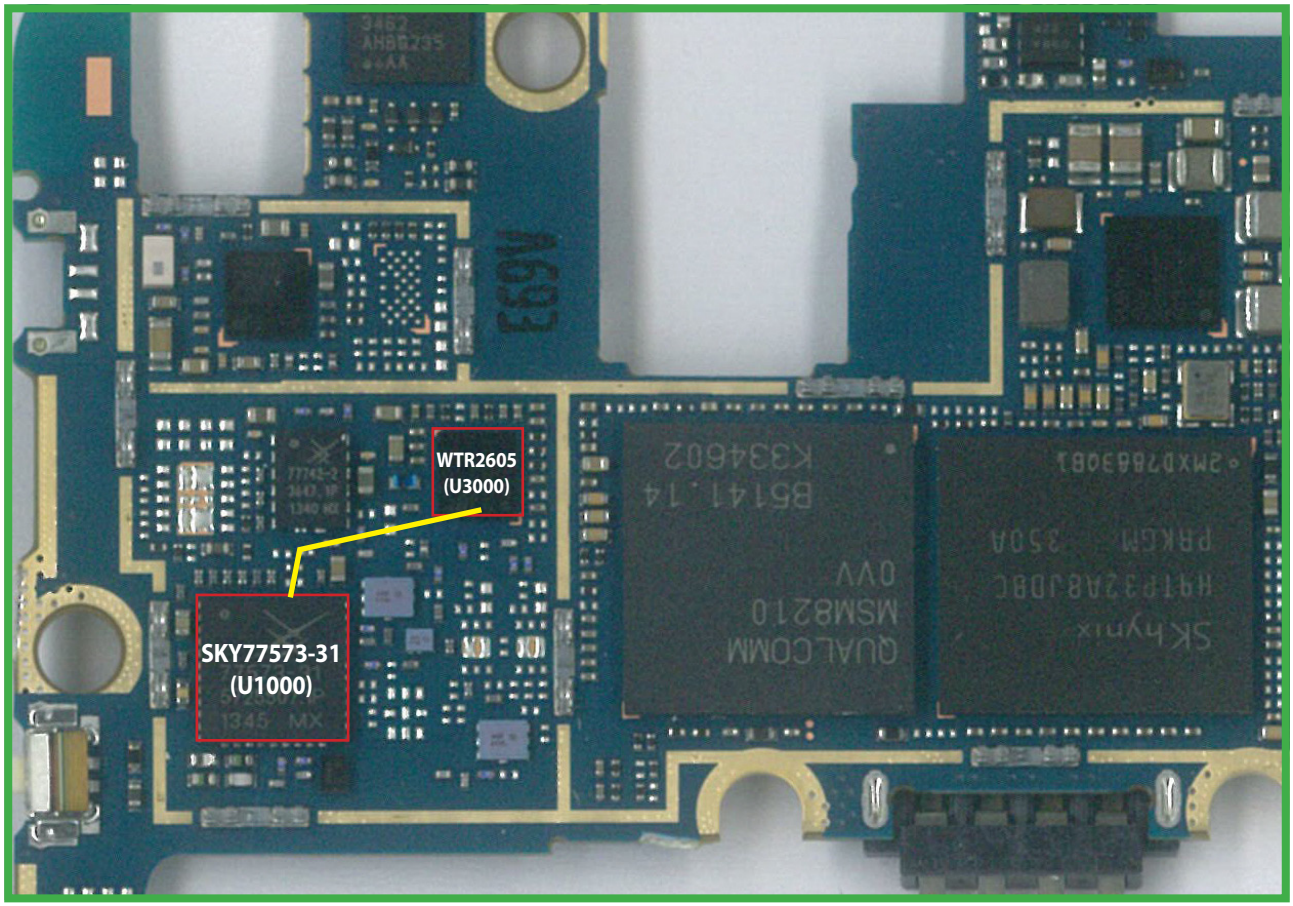

<Main Top>

Copyright © 2014 LG Electronics. Inc. All right reserved.
Only for training and service purposes

3.4.1.1 Checking DC Power supply circuit

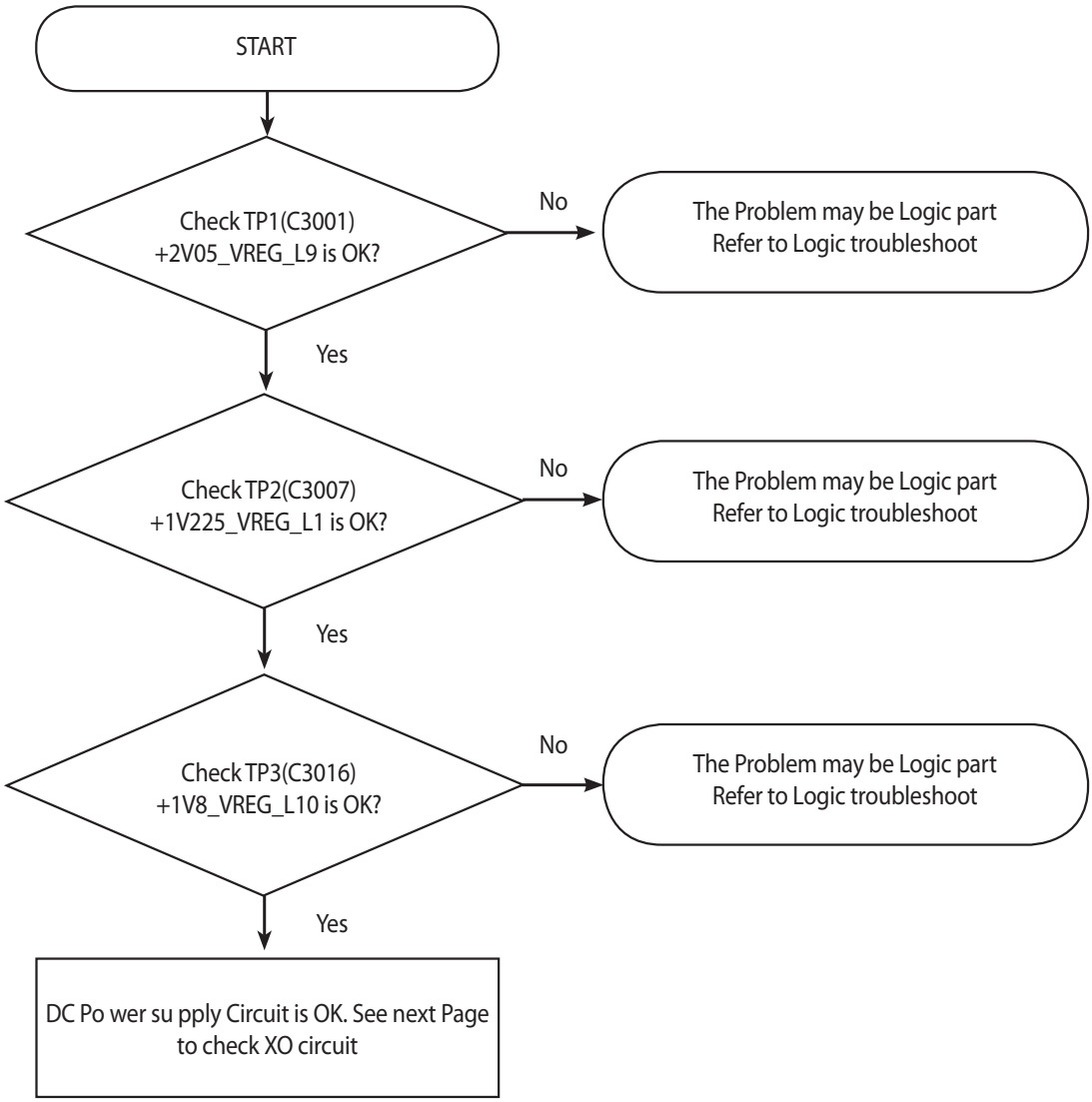

Copyright © 2014 LG Electronics. Inc. All right reserved.
Only for training and service purposes

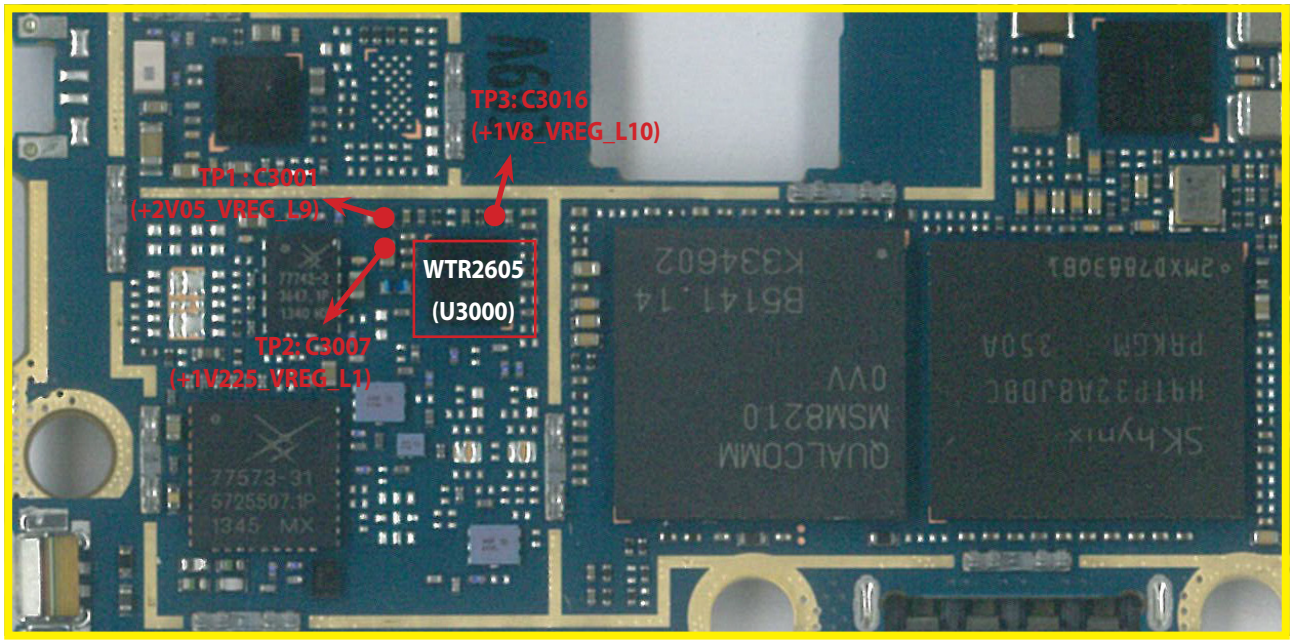

<Main Top>

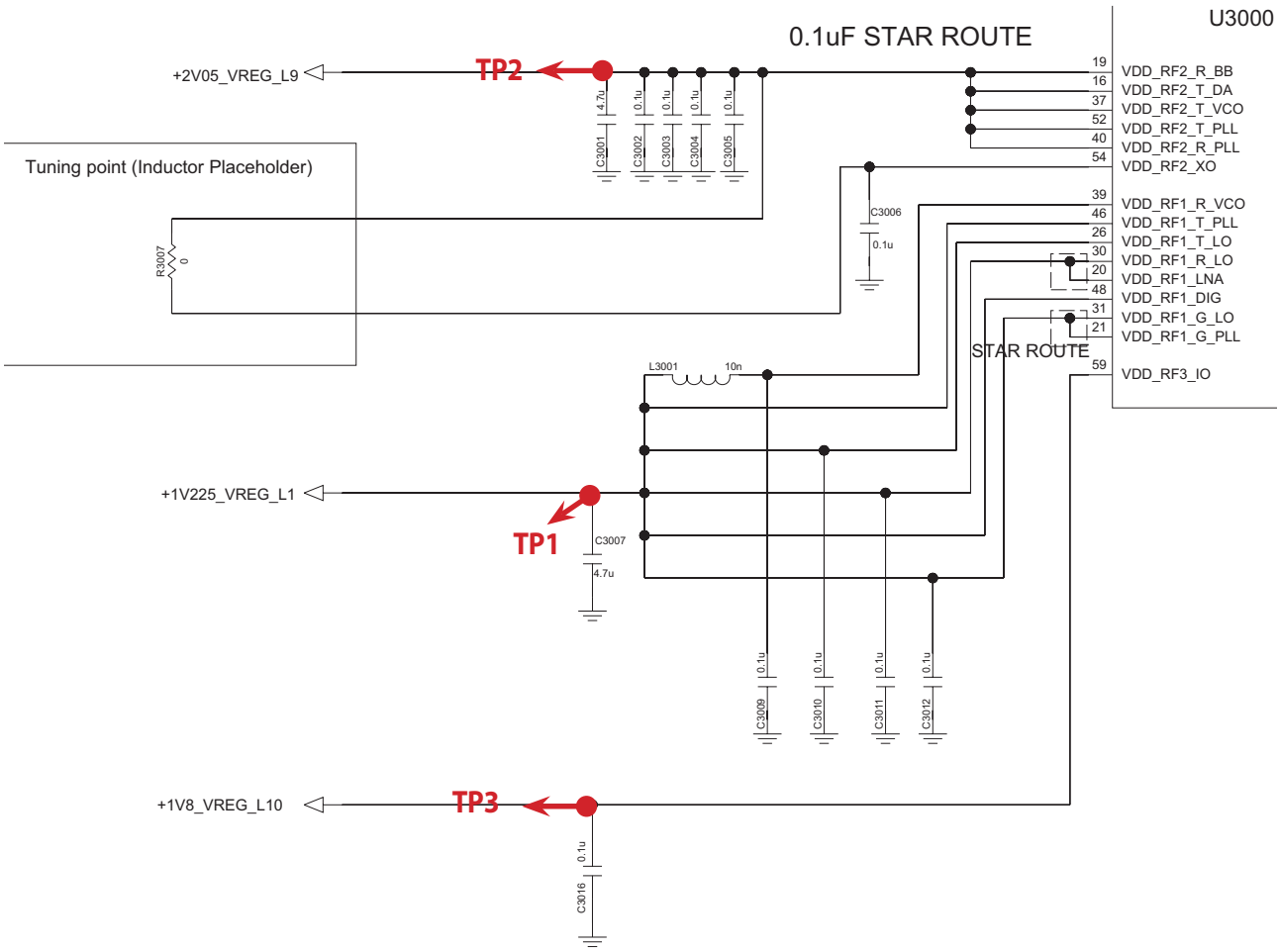

Copyright © 2014 LG Electronics. Inc. All right reserved.
Only for training and service purposes

3.4.1.2 Checking WTR2605 XO circuit

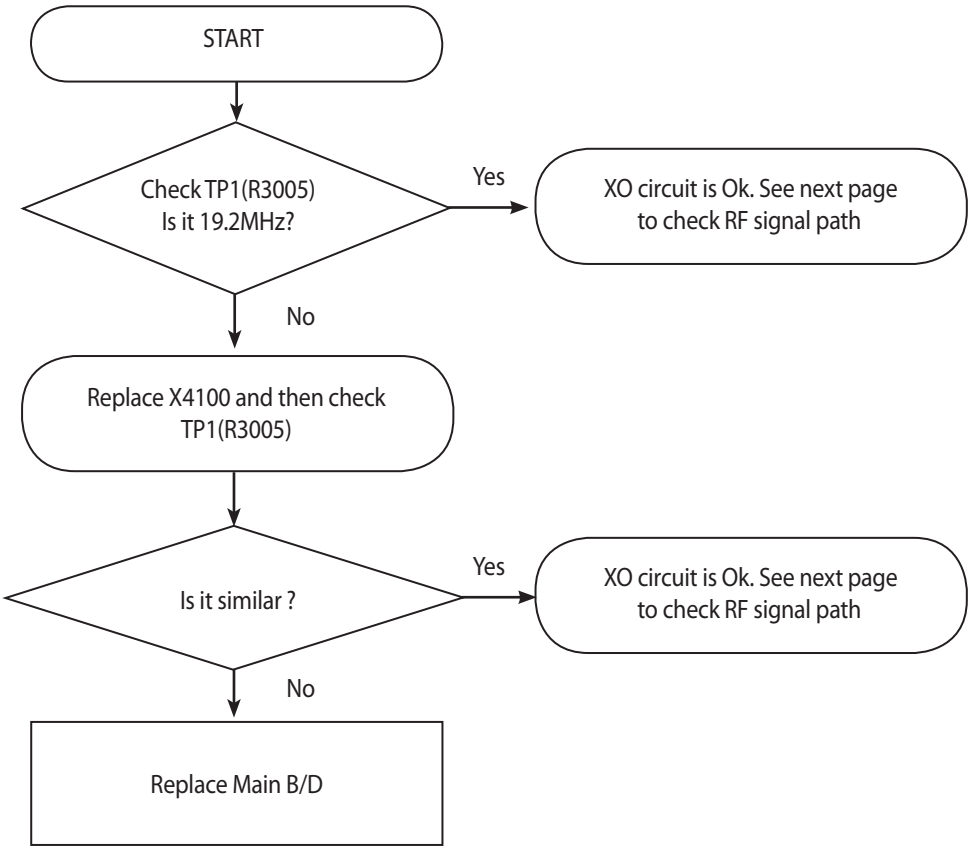

Copyright © 2014 LG Electronics. Inc. All right reserved.
Only for training and service purposes

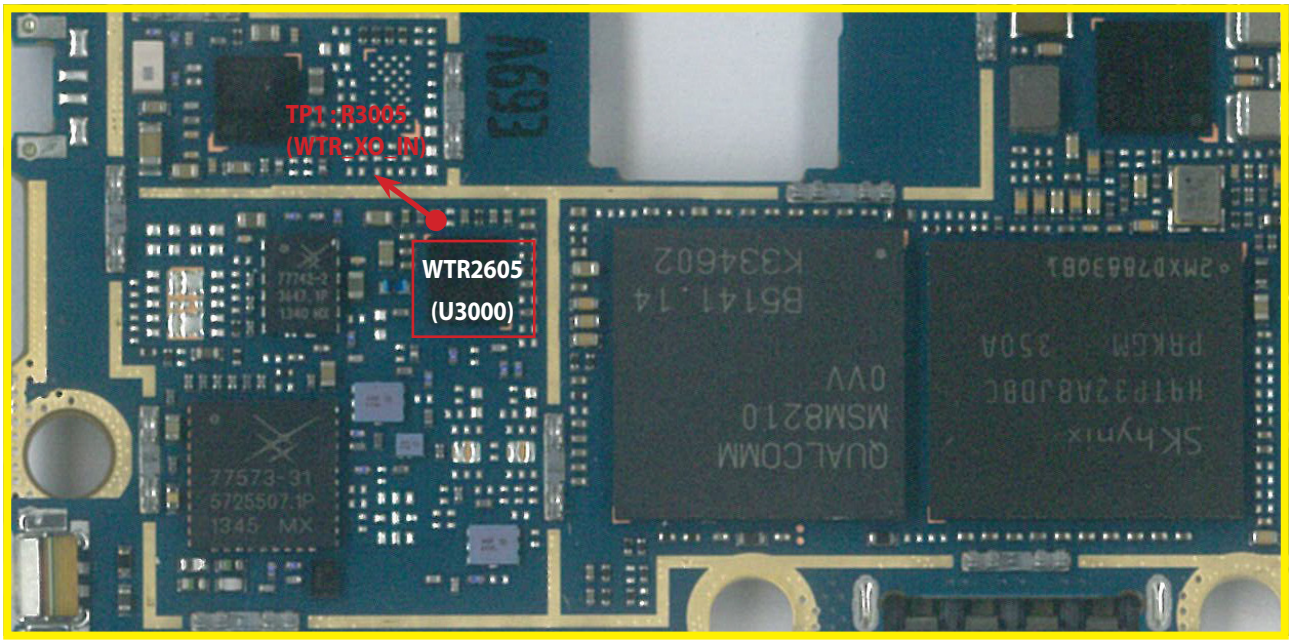

<Main Top>

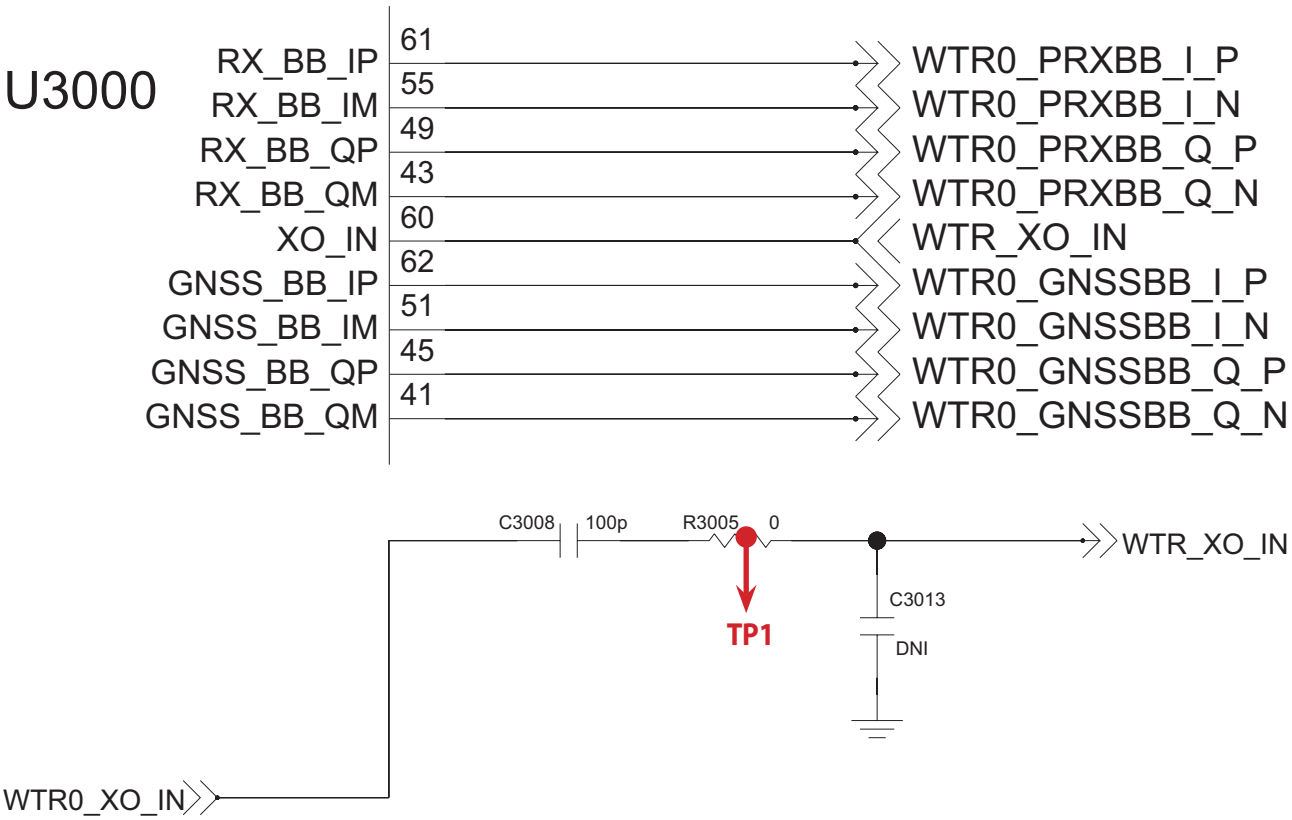

Copyright © 2014 LG Electronics. Inc. All right reserved.
Only for training and service purposes

3.4.1.3 Checking RF signal path (Tx Module)

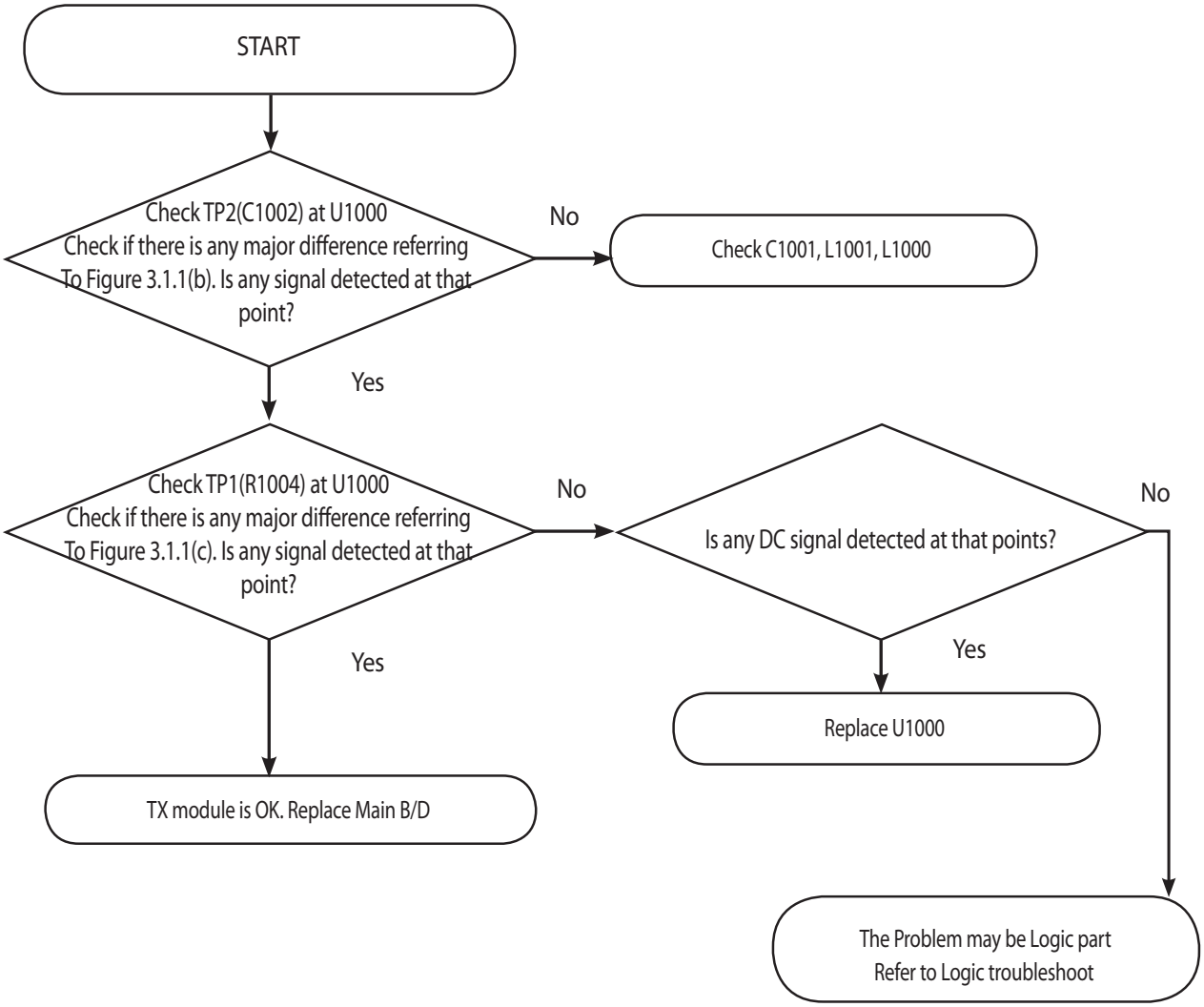

Copyright © 2014 LG Electronics. Inc. All right reserved.
Only for training and service purposes

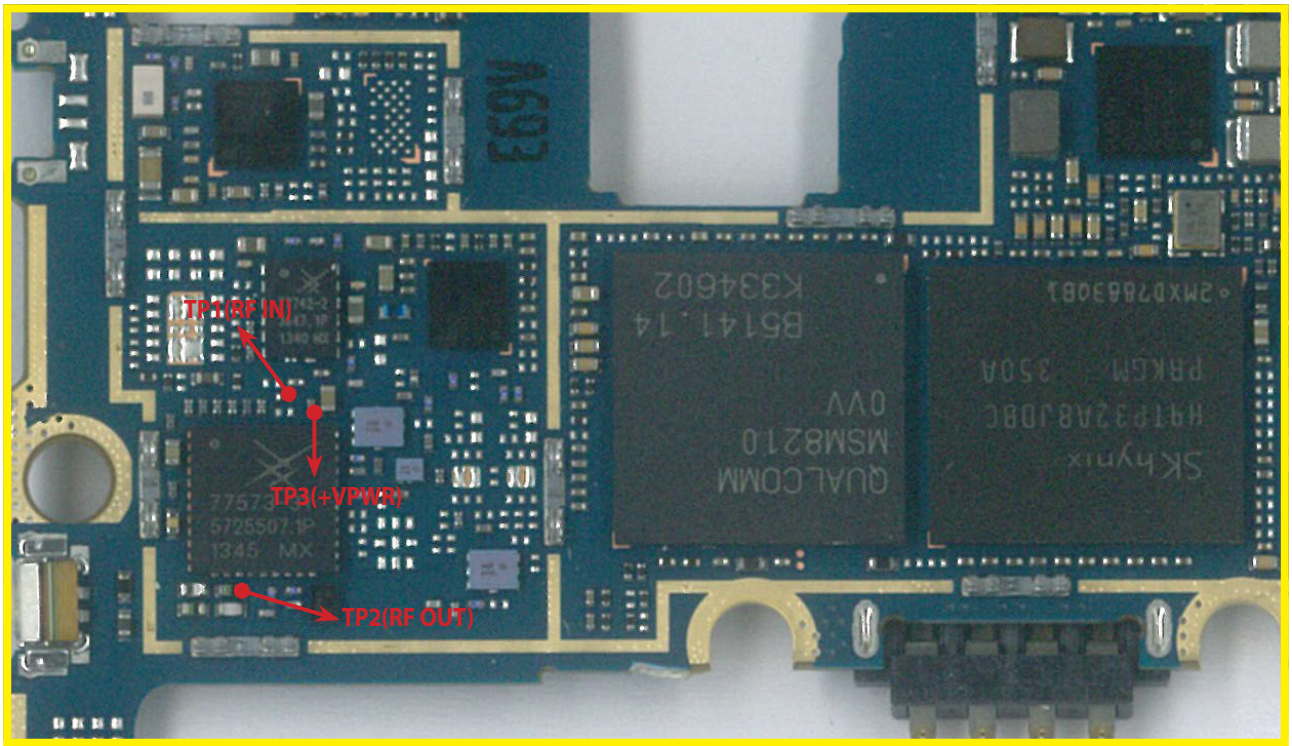

<Main Top>

Copyright © 2014 LG Electronics. Inc. All right reserved.
Only for training and service purposes

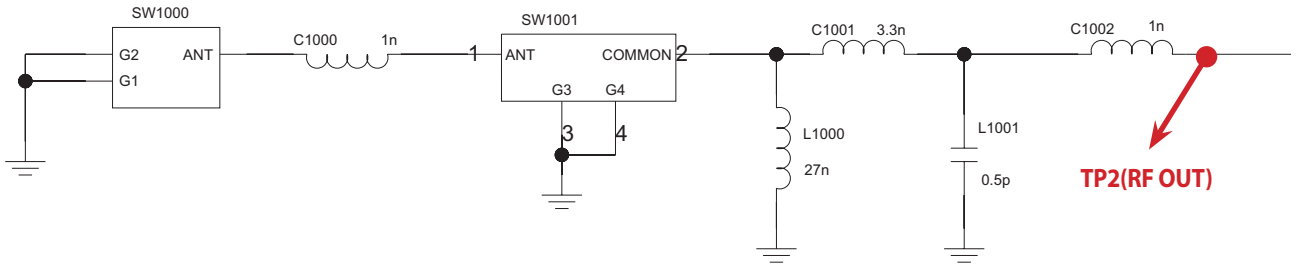

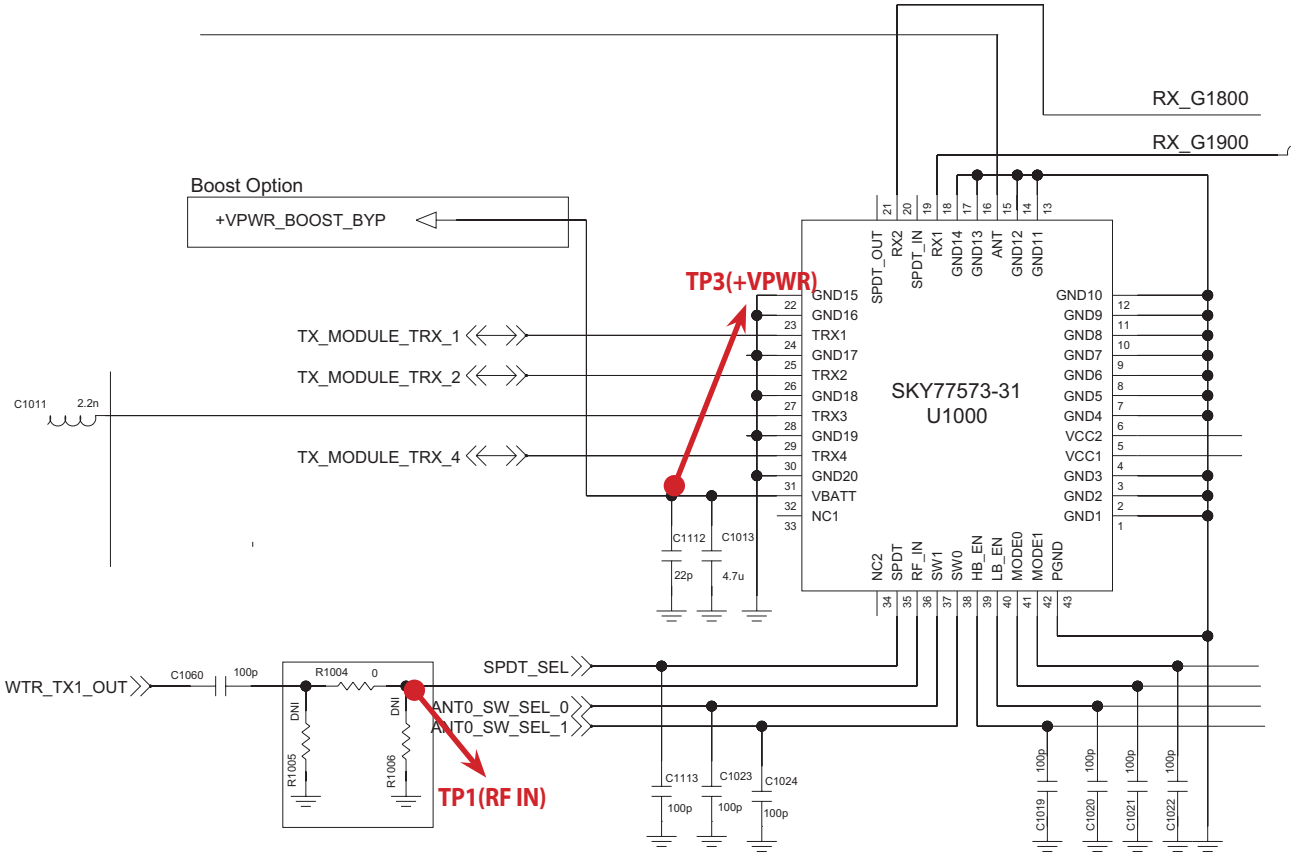

Copyright © 2014 LG Electronics. Inc. All right reserved.
Only for training and service purposes

3.5 Power

The main power source of D325 is provided by1 chip which is PM8110.

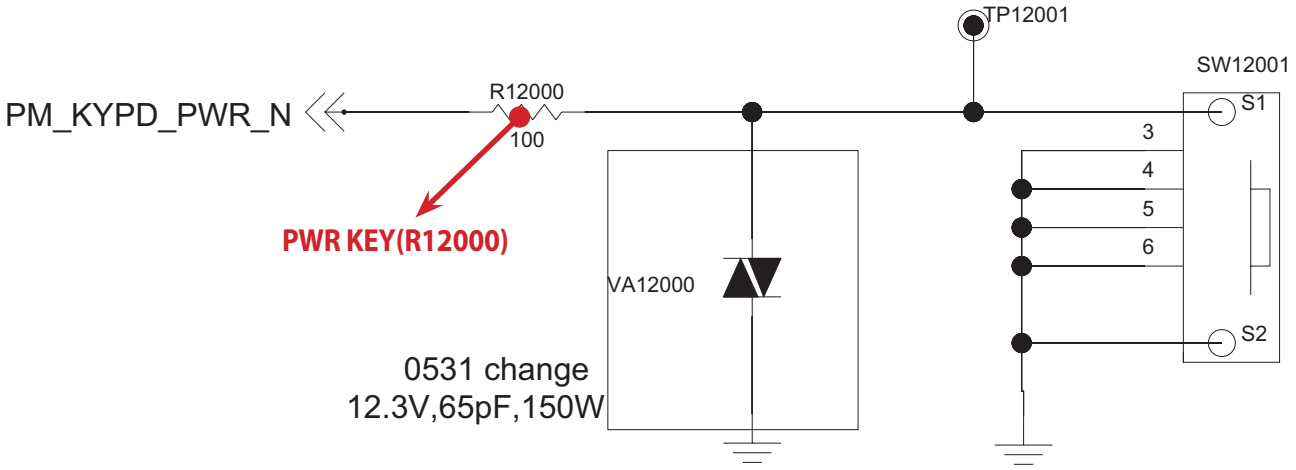

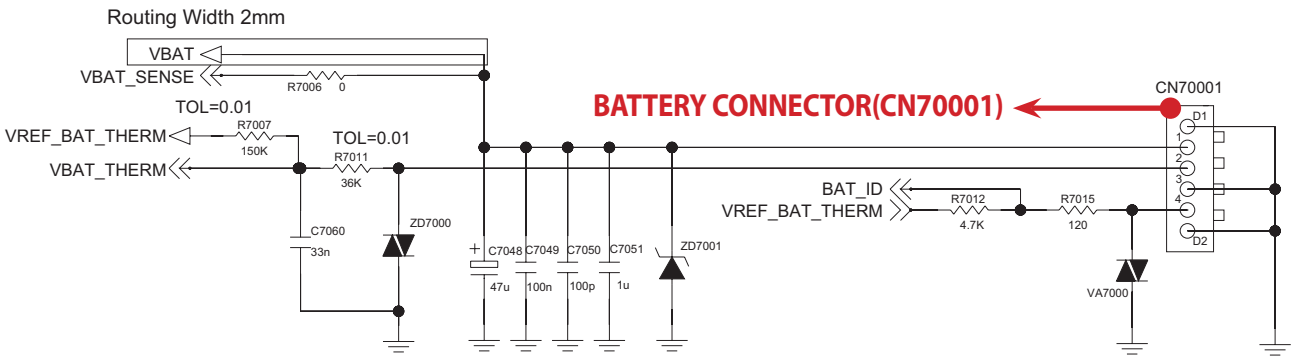

Copyright © 2014 LG Electronics. Inc. All right reserved.
Only for training and service purposes

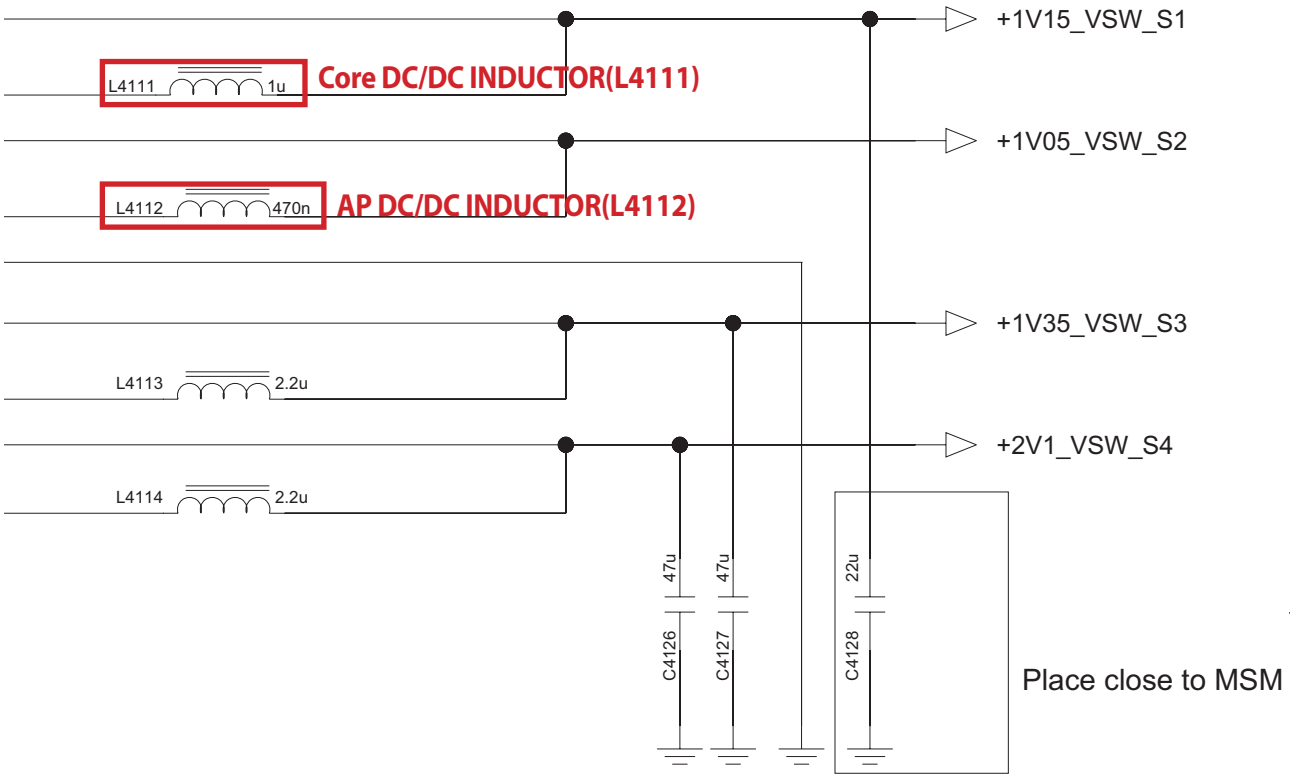

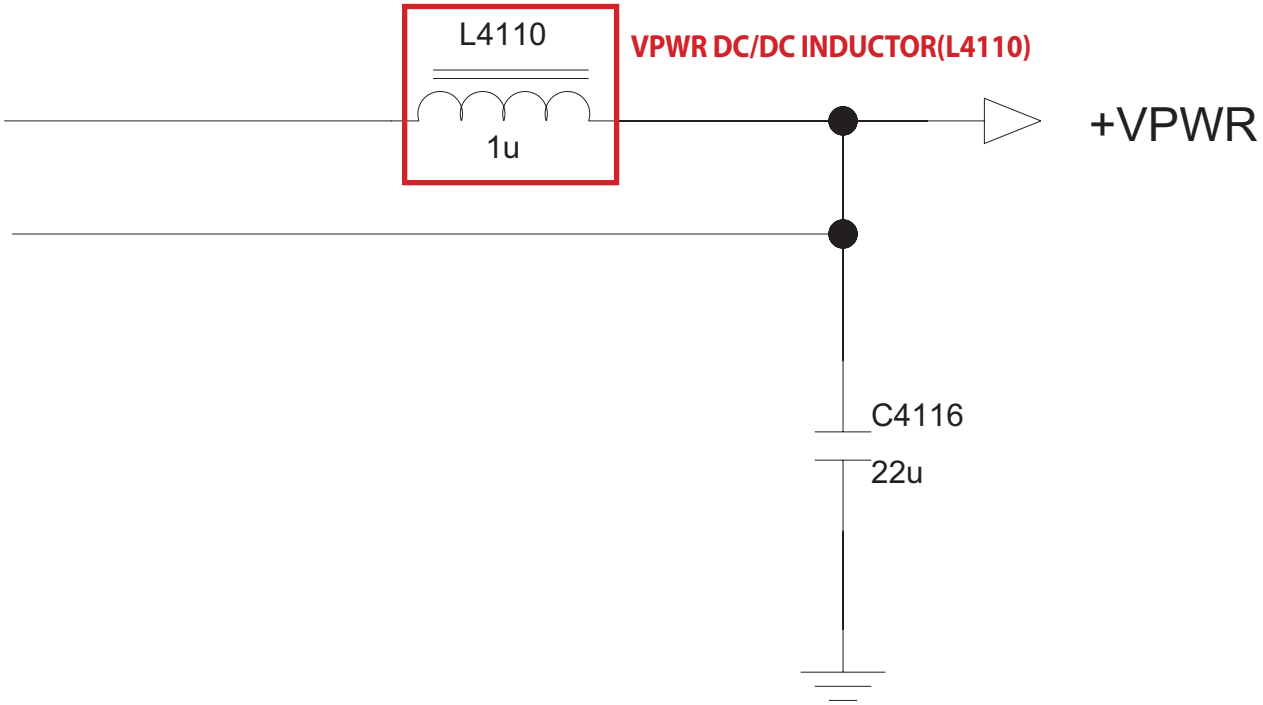

Copyright © 2014 LG Electronics. Inc. All right reserved.
Only for training and service purposes

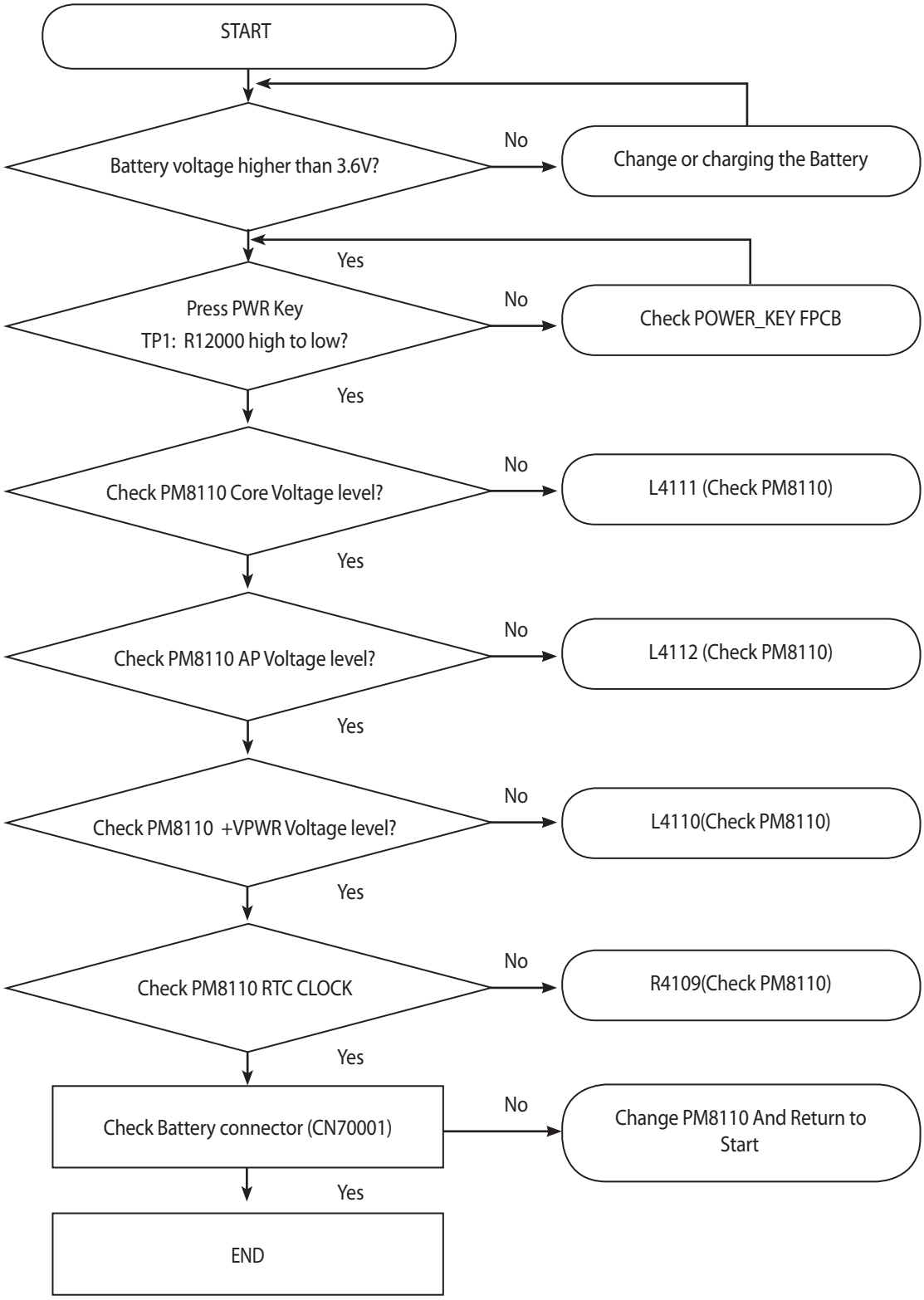

Copyright © 2014 LG Electronics. Inc. All right reserved.
Only for training and service purposes

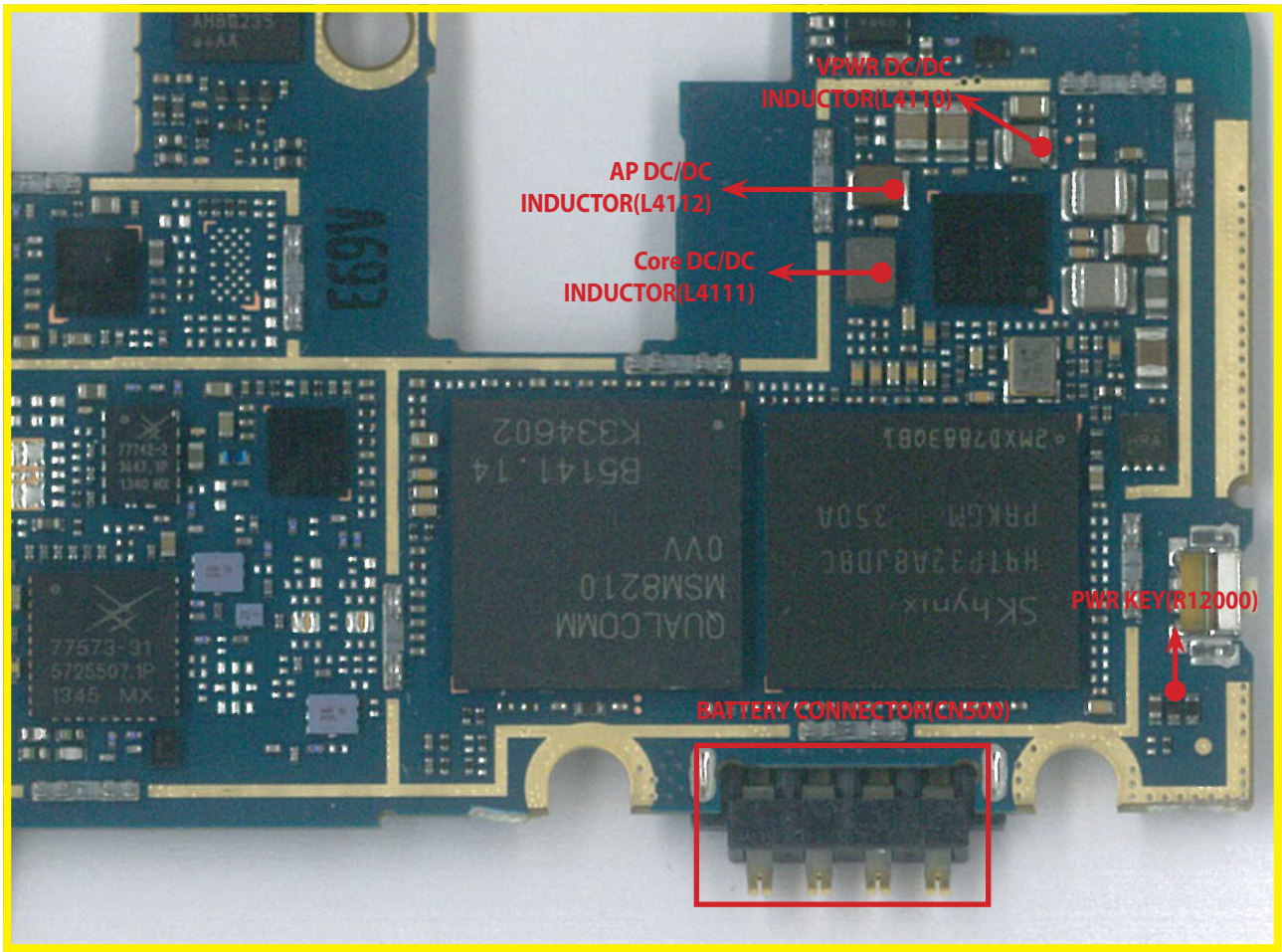

<Main Top>

Copyright © 2014 LG Electronics. Inc. All right reserved.
Only for training and service purposes

3.6 Charging

D325 uses PMIC for charging control. The PMIC circuit includes the charging pass transistor detects the VDD and VBAT voltages, and its control driver. The PMIC maximum charging current is set around 700mA.

Charging Procedure

- Supply the VCHG use a TA or u-USB cable
- The Chager IC control the charging current
- Charging current flows into the main battery

Troubleshooting Check Point

- Connection of the TA or u-USB cable
- Main battery

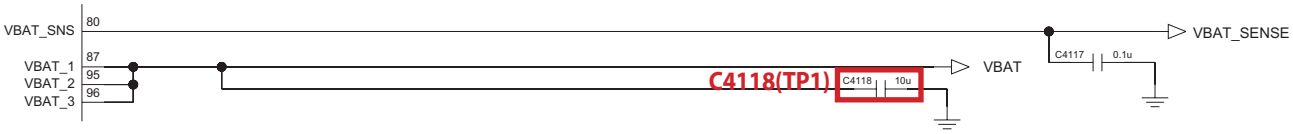

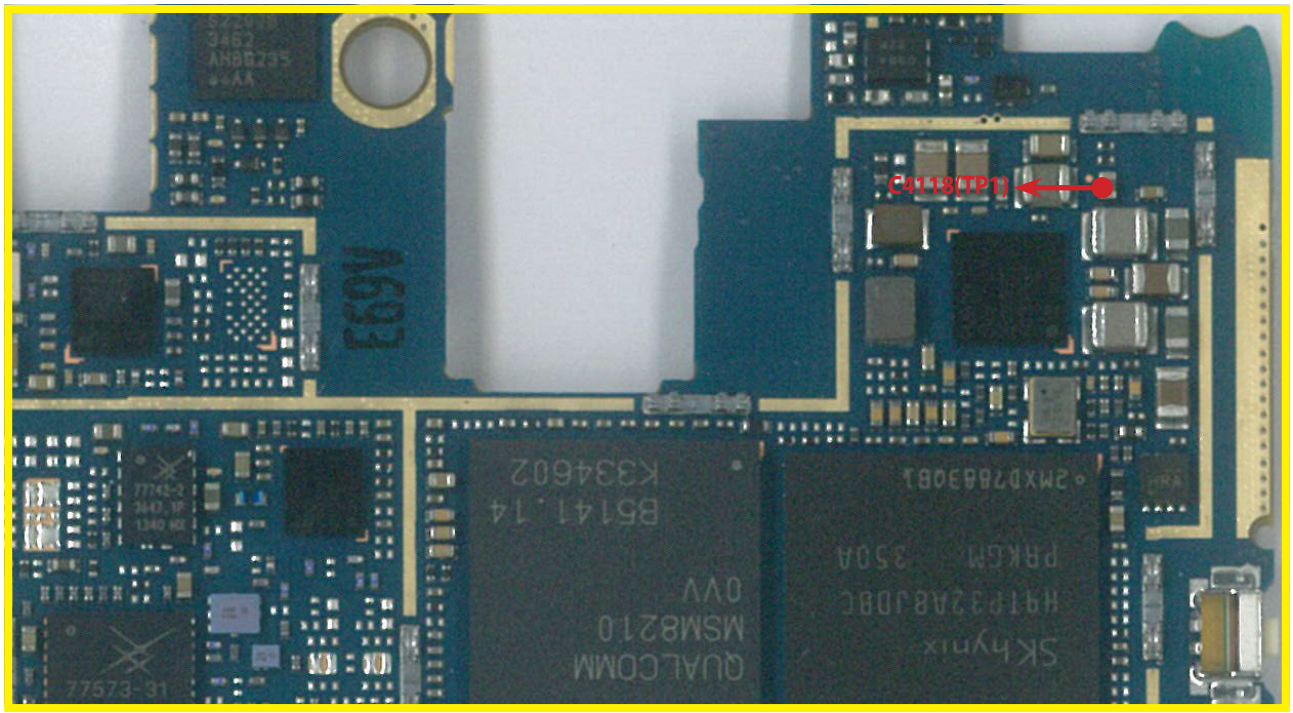

<Main Top>

Copyright © 2014 LG Electronics. Inc. All right reserved.
Only for training and service purposes

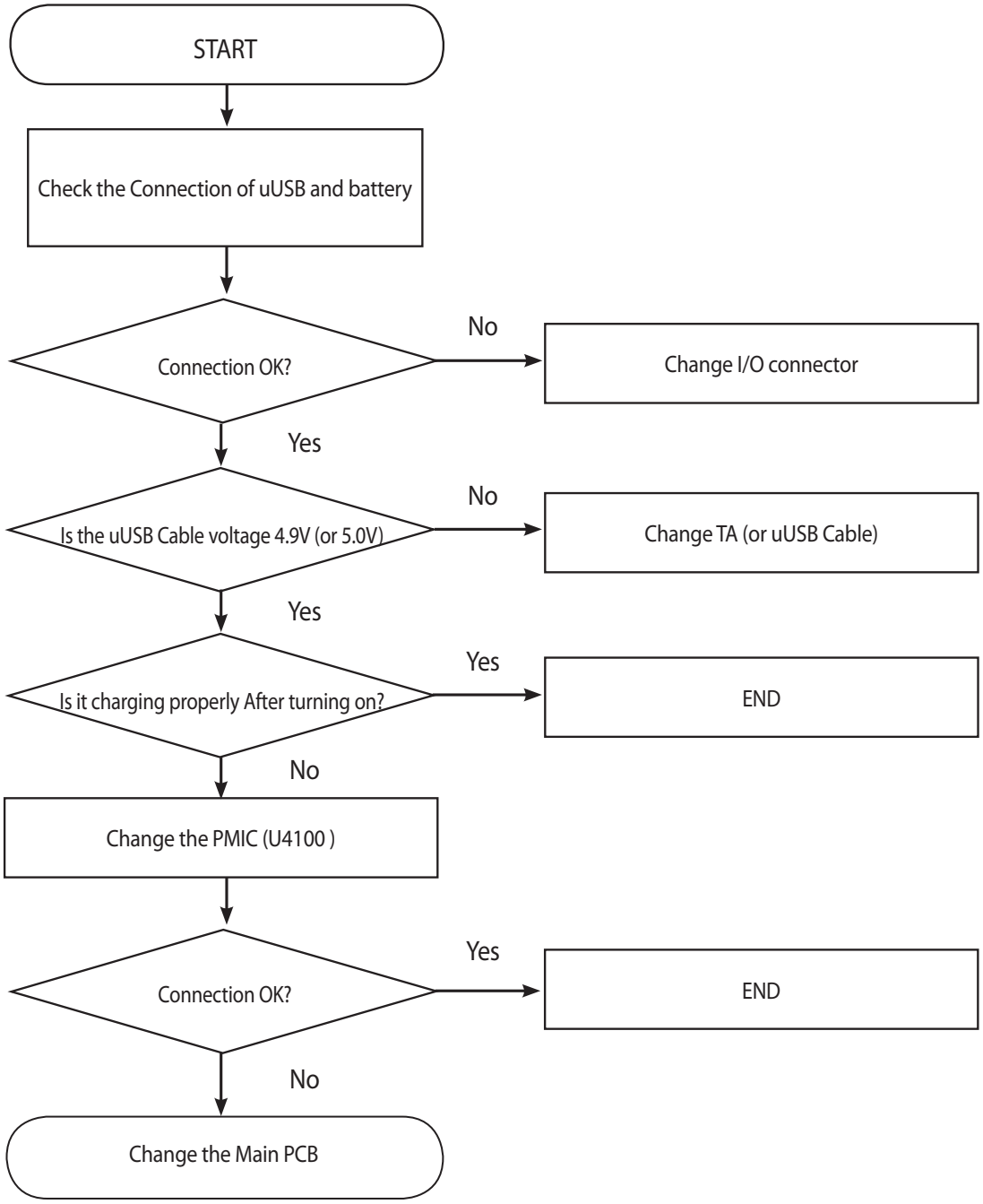

Copyright © 2014 LG Electronics. Inc. All right reserved.
Only for training and service purposes

3.7 USB TS

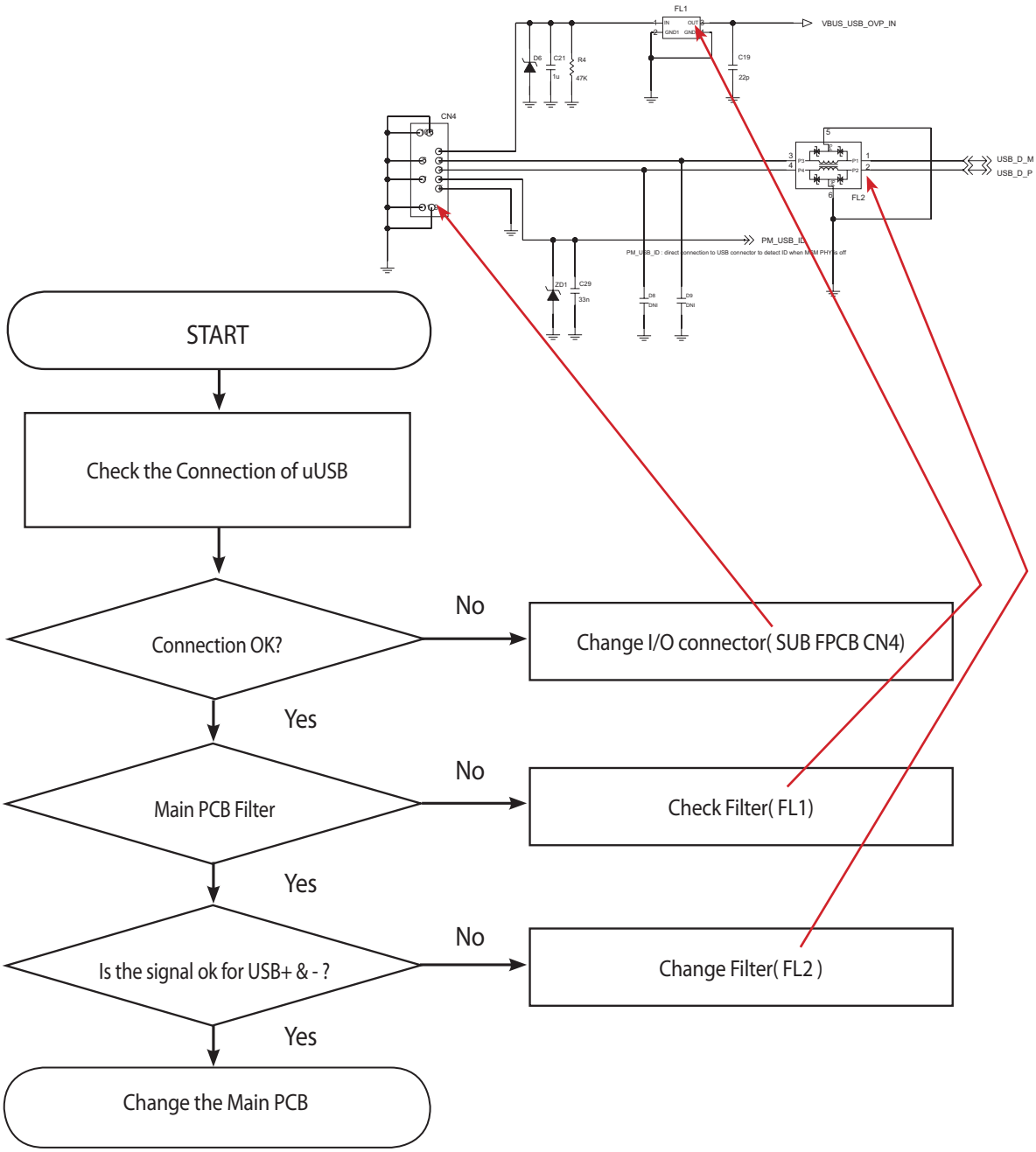

Copyright © 2014 LG Electronics. Inc. All right reserved.
Only for training and service purposes

3.8 Audio

3.8.1 Overview

Audio Block Diagram

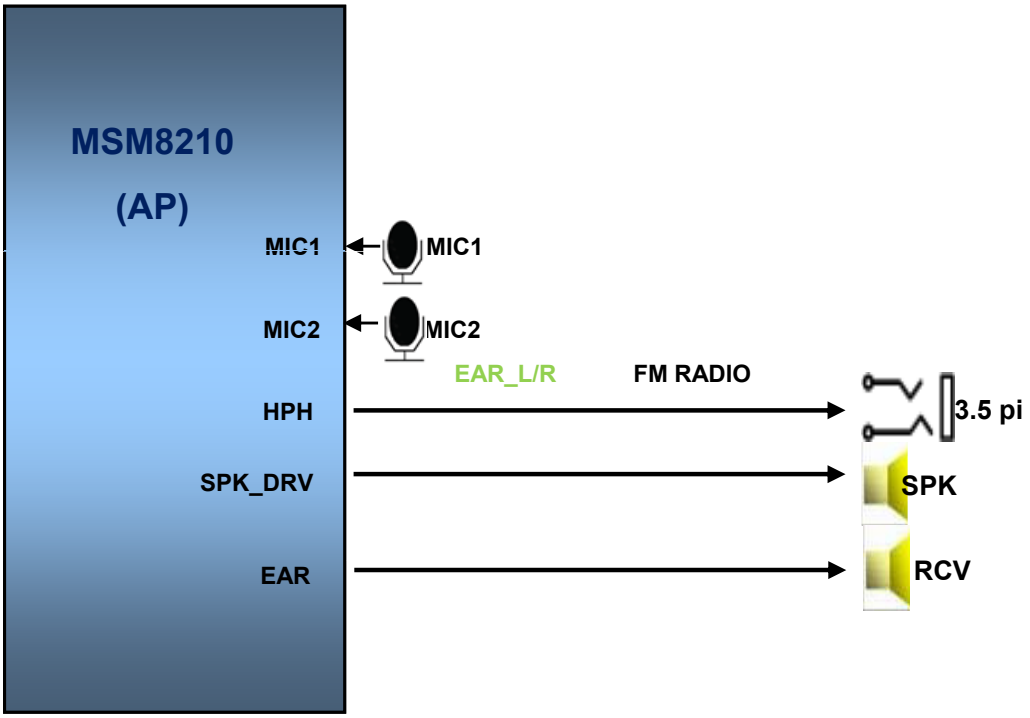

Copyright © 2014 LG Electronics. Inc. All right reserved.
Only for training and service purposes

3.8.2 Speaker

It's trouble shooting guide for no sound case.
Speaker control signals are generate by MSM8210(U2100)
If low level volume or breaking the sound, change speaker module

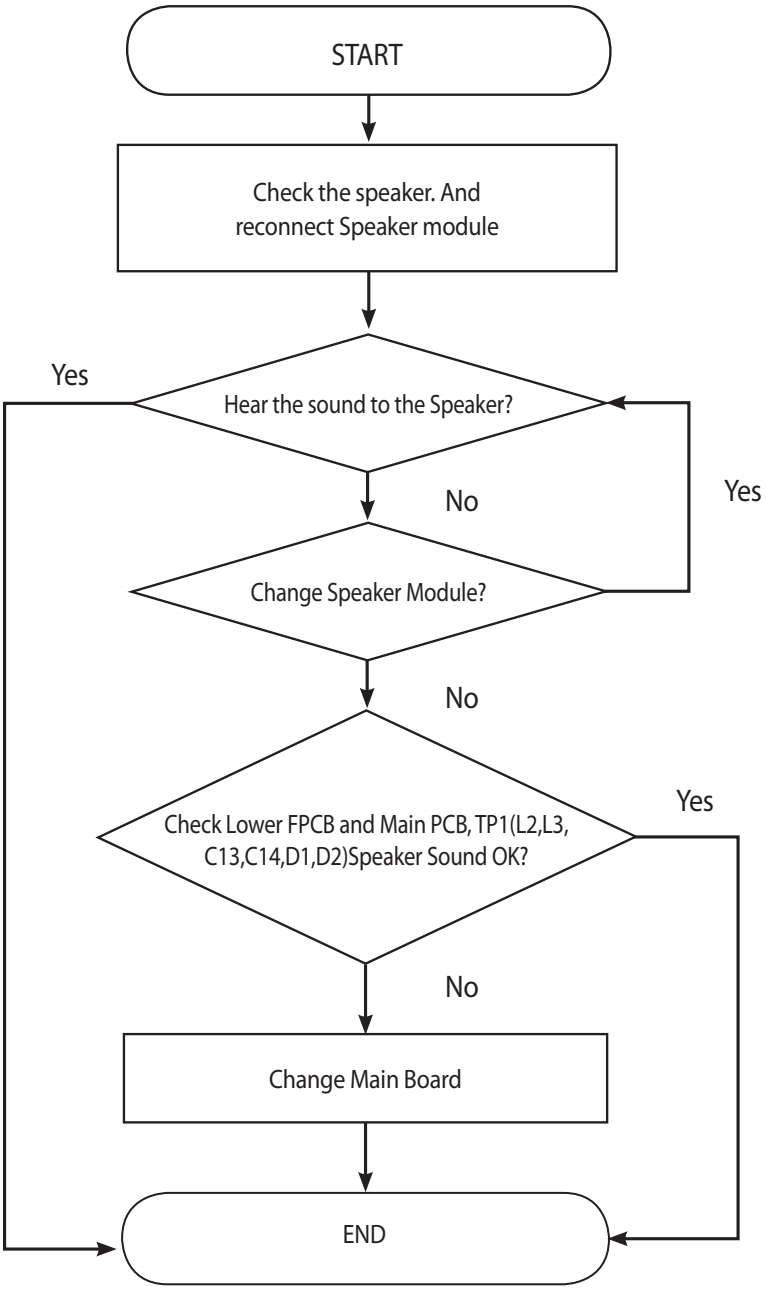

Copyright © 2014 LG Electronics. Inc. All right reserved.
Only for training and service purposes

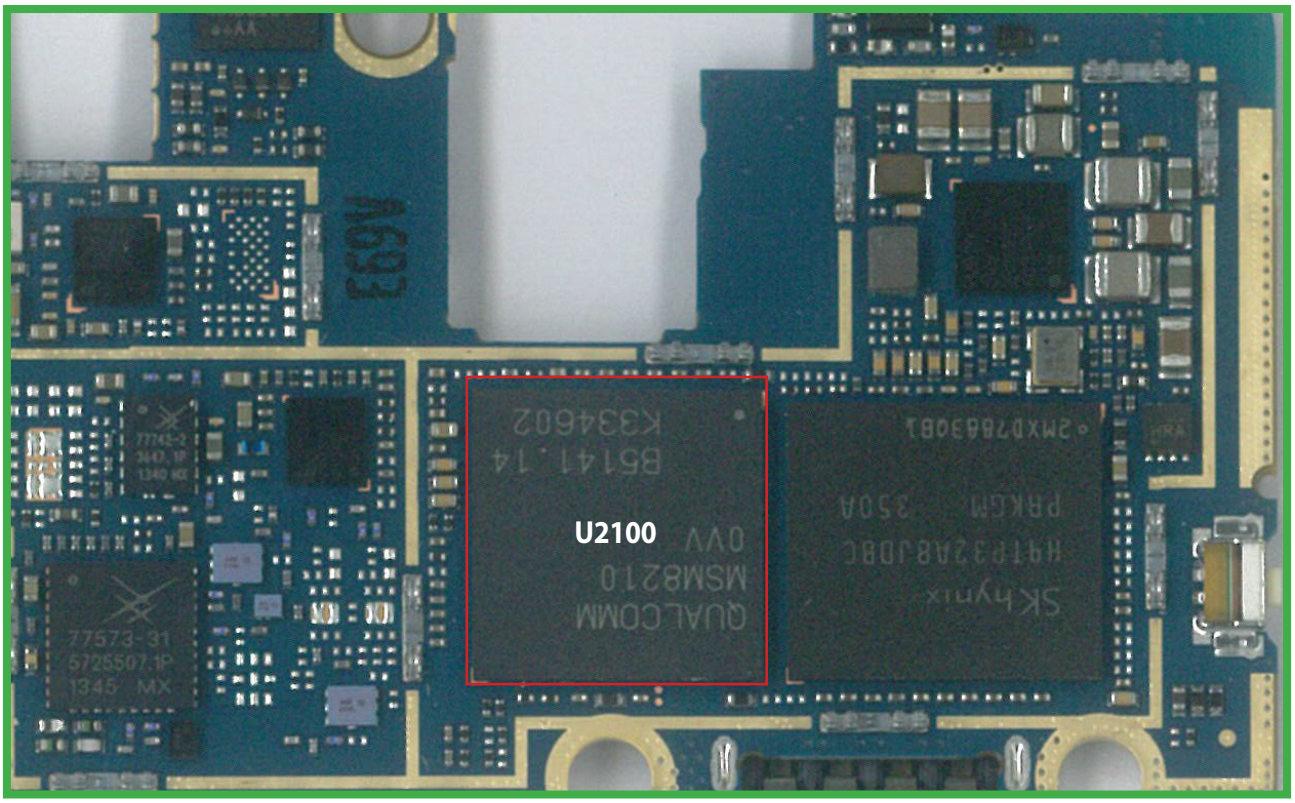

<Main Top>

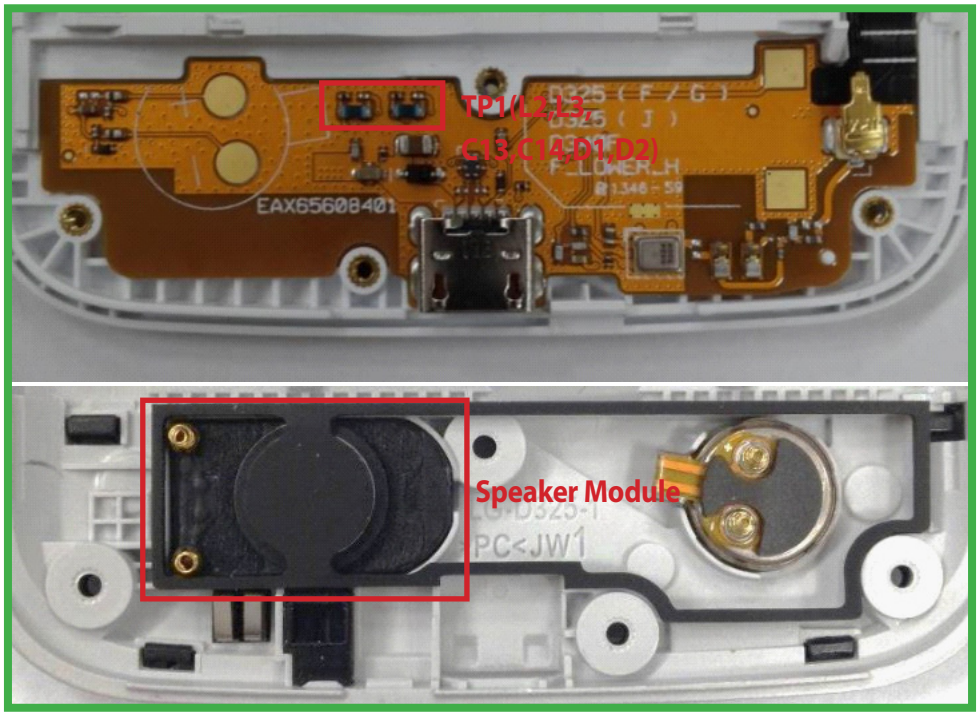

Copyright © 2014 LG Electronics. Inc. All right reserved.
Only for training and service purposes

Main TO-lower FPCB CONNECTOR

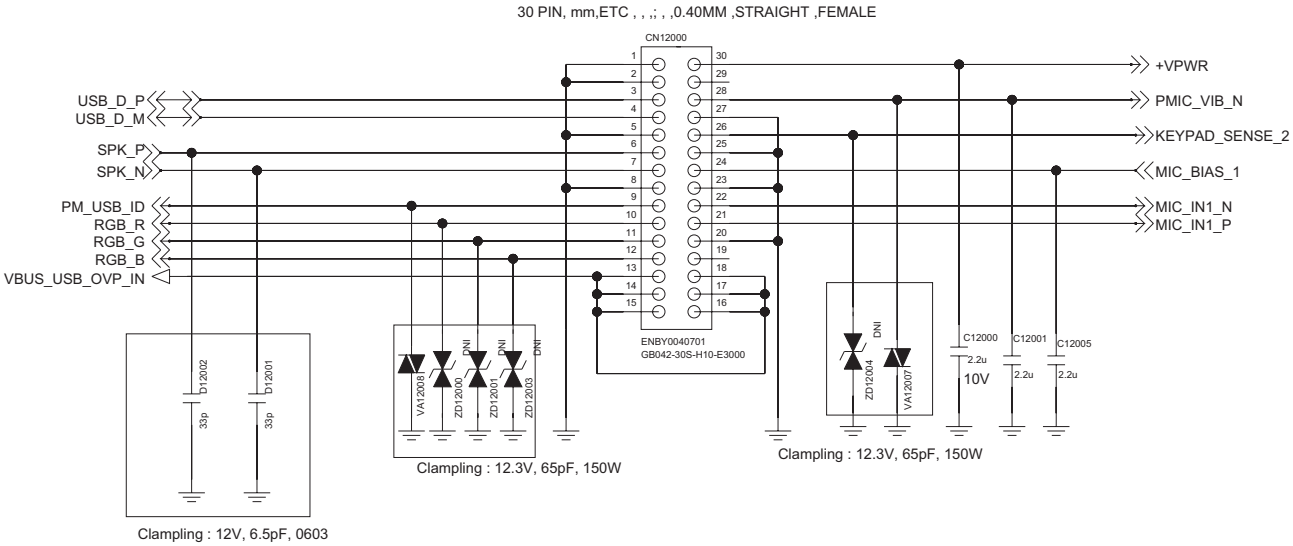

FPCB

SPEAKER

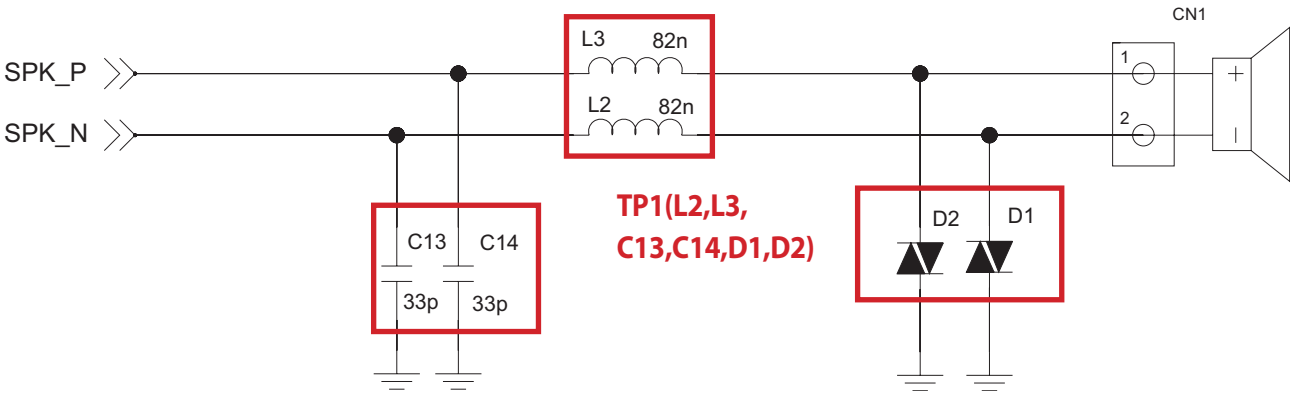

Copyright © 2014 LG Electronics. Inc. All right reserved.
Only for training and service purposes

3.8.3 Receiver

Receiver control signals are generate by MSM8210(U2100)

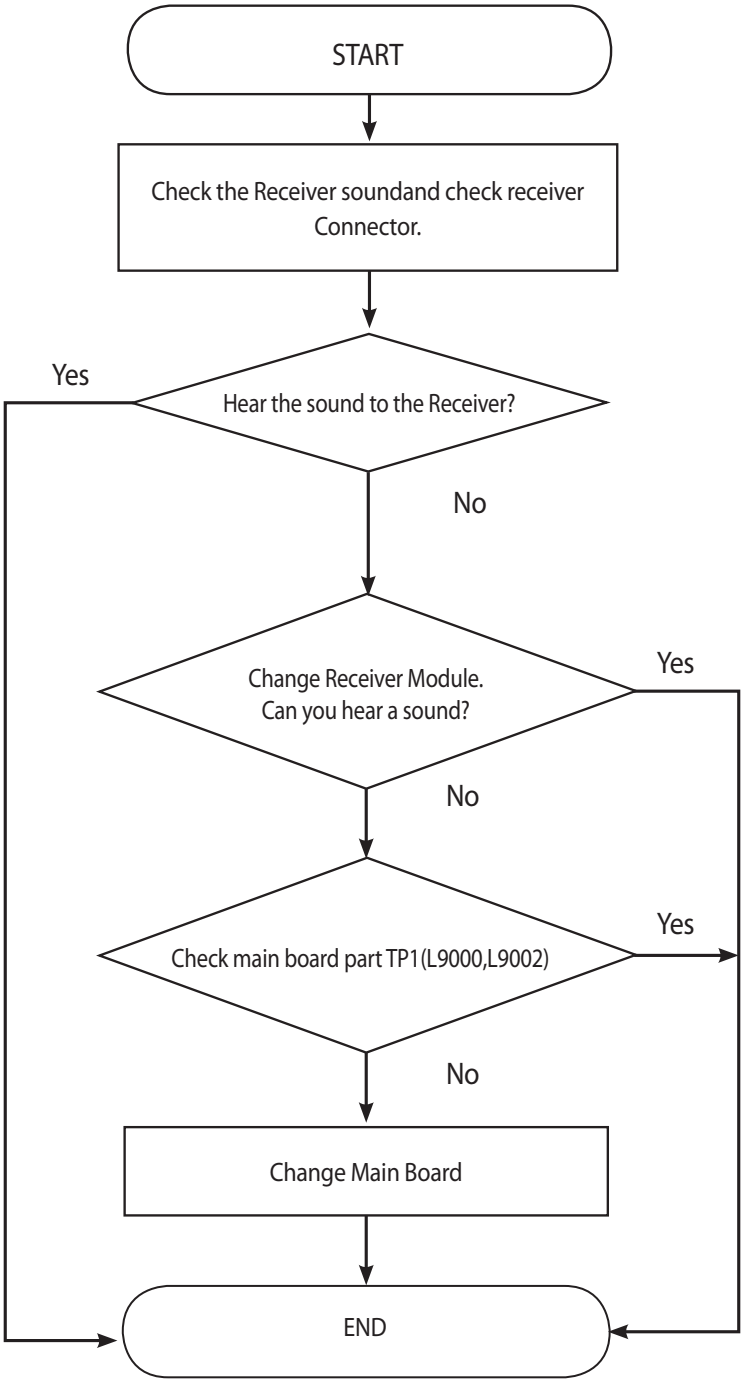

Copyright © 2014 LG Electronics. Inc. All right reserved.
Only for training and service purposes

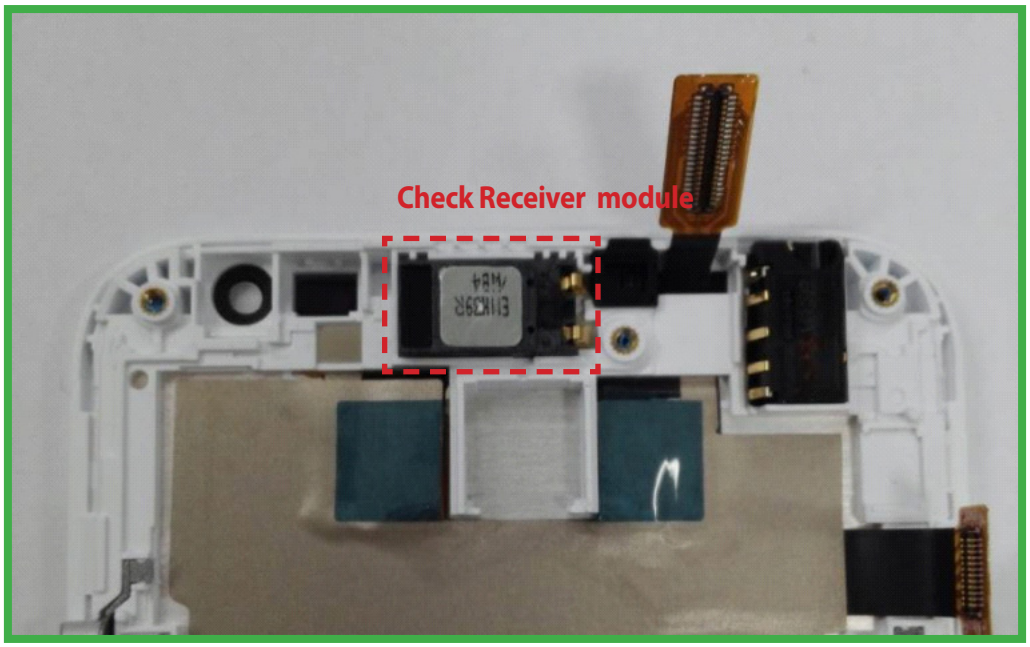

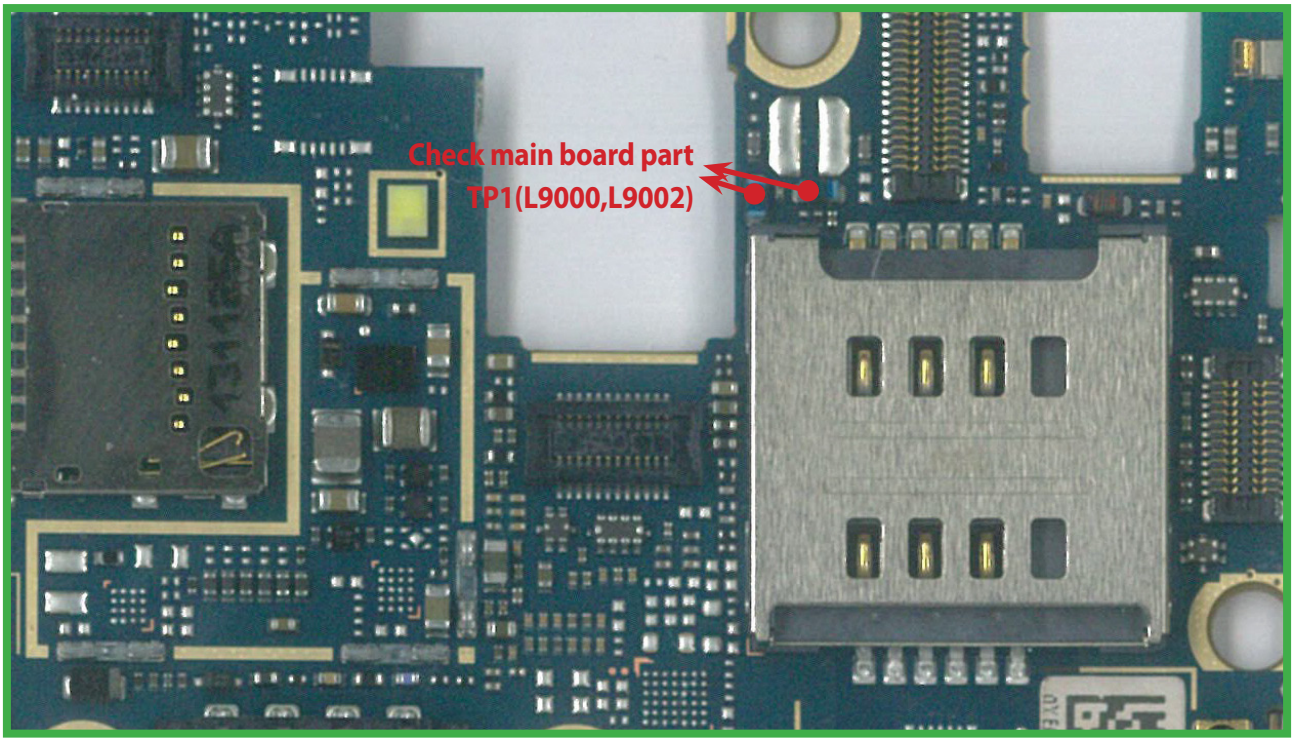

<Main Bot>

In case of No Receiver sound, not only Receiver fault but Mic fault.

You must check first voice recording test. After voice recording you can hear a recording sound, receiver path or parts is something wrong.

Copyright © 2014 LG Electronics. Inc. All right reserved.
Only for training and service purposes

3.8.4 Main Mic

Main Mic located on Lower FPCB.

It's operating voice call(except speakerphone), voice recording, camcorder recording

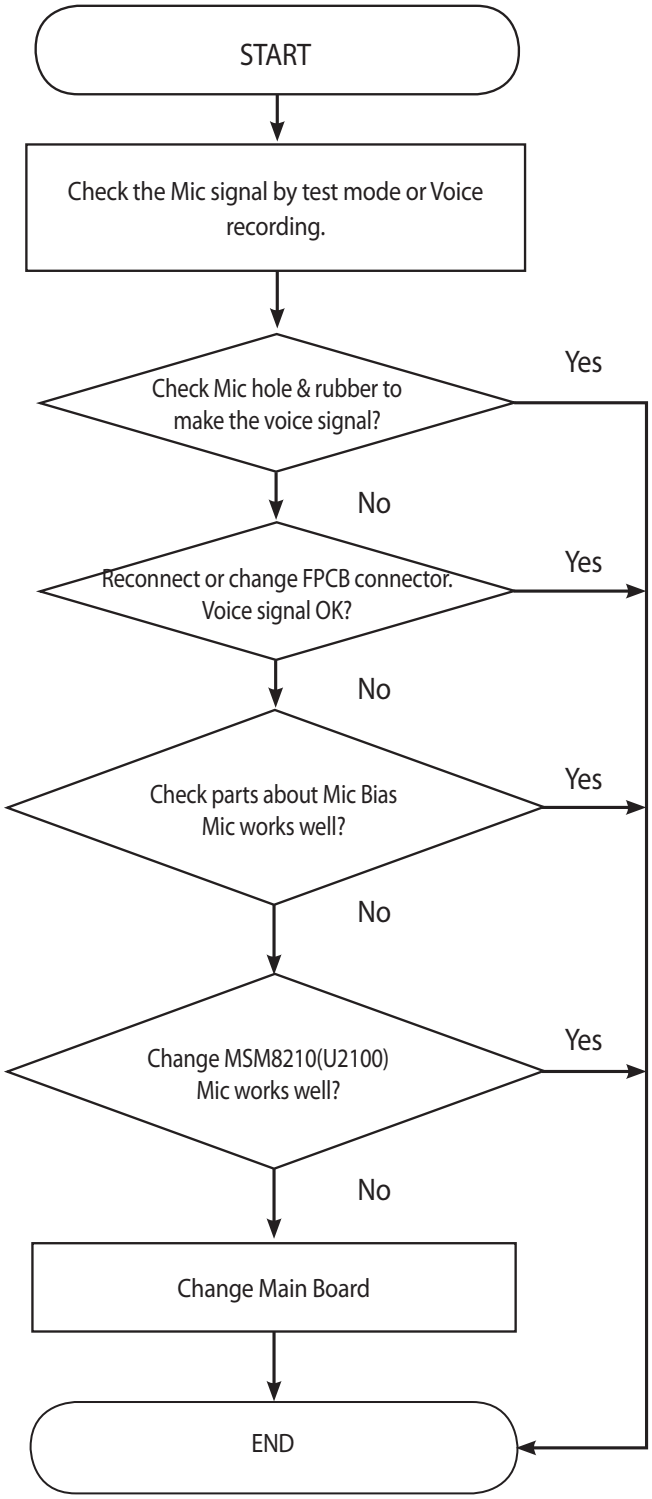

Copyright © 2014 LG Electronics. Inc. All right reserved.
Only for training and service purposes

Check Main Mic hole.

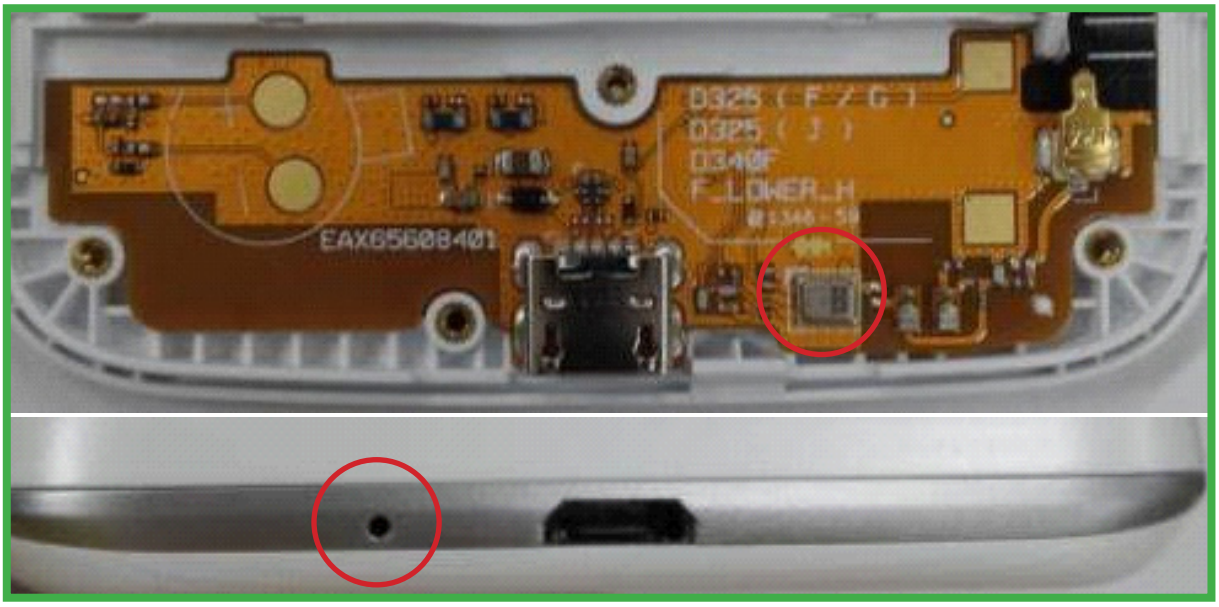

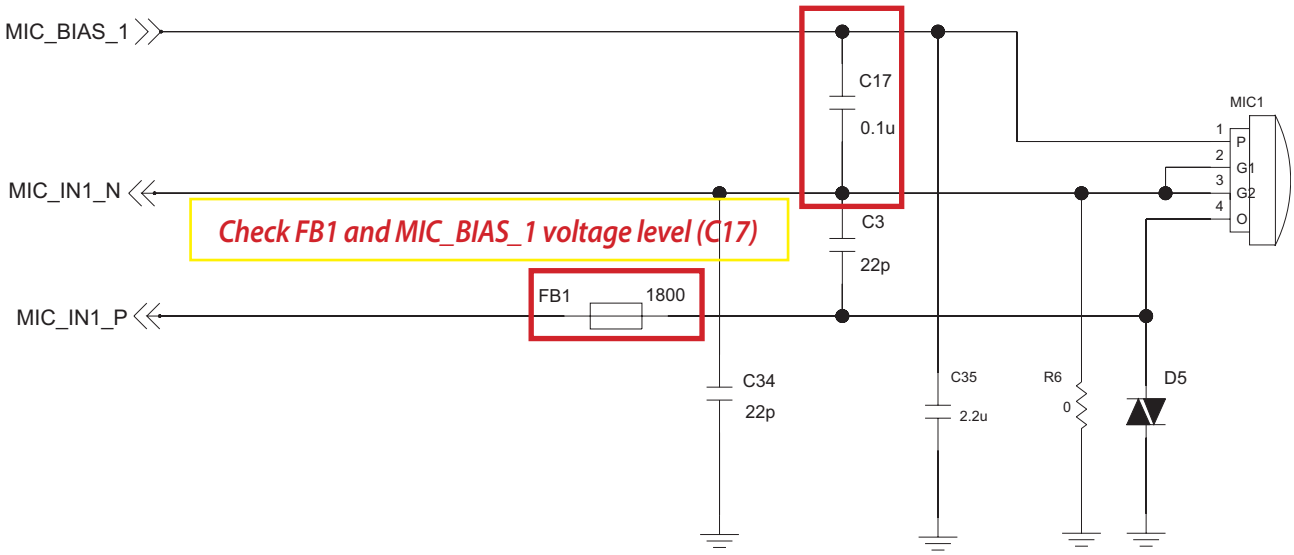

Check FB1 and MIC_BIAS_1 voltage level (C17)

Copyright © 2014 LG Electronics. Inc. All right reserved.
Only for training and service purposes

3.8.5 2nd Mic

2nd Mic located on Main PCB Top Side.

It's operating handset voice call and speakerphone.

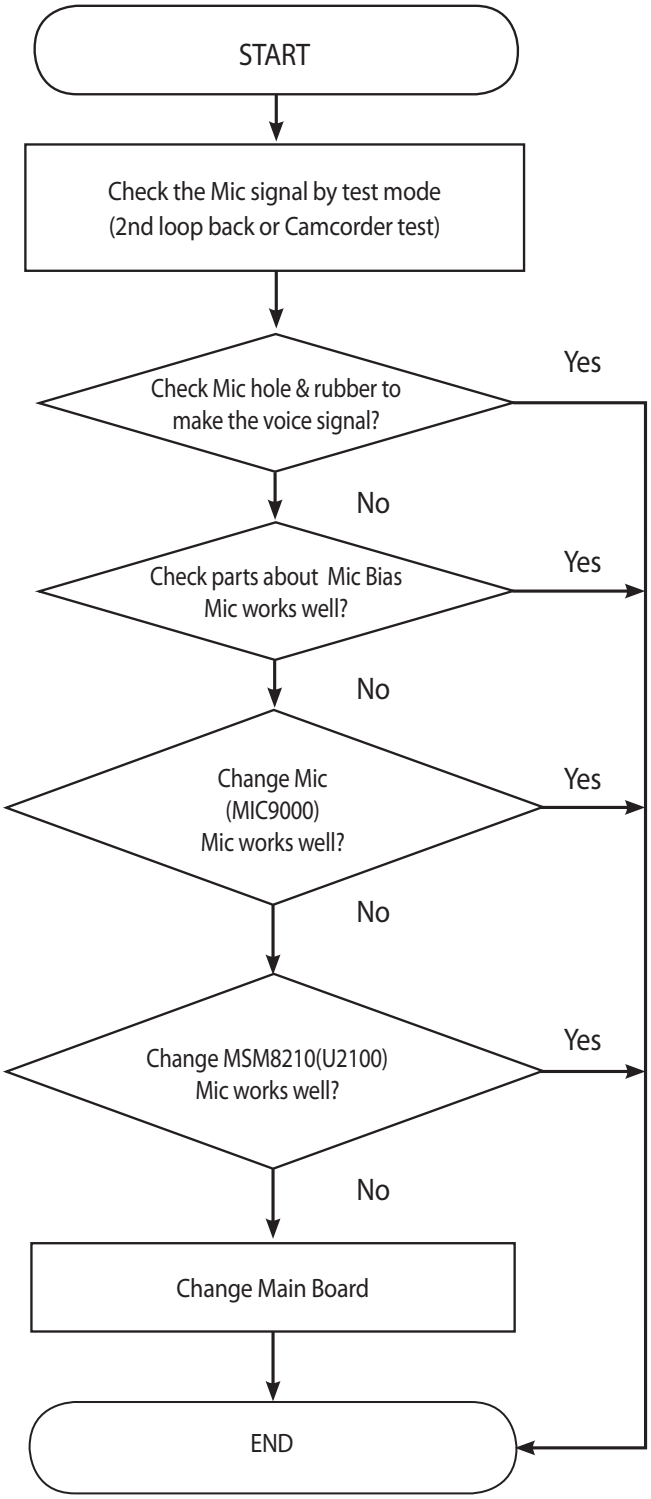

Copyright © 2014 LG Electronics. Inc. All right reserved.
Only for training and service purposes

2nd Mic Hole located on Main PCB Top Side..
It's operating handset voice call and speakerphone
In case of Test menu, loopback 2nd Mic test and Camcorder recording.

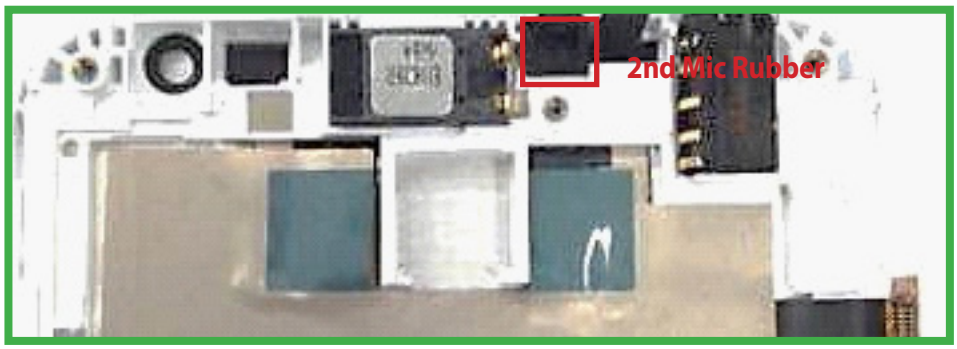

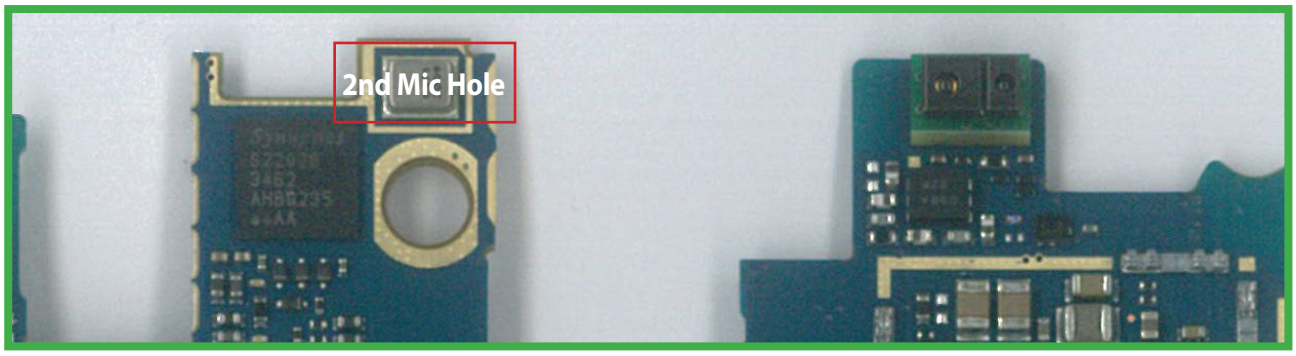

<Main Top>

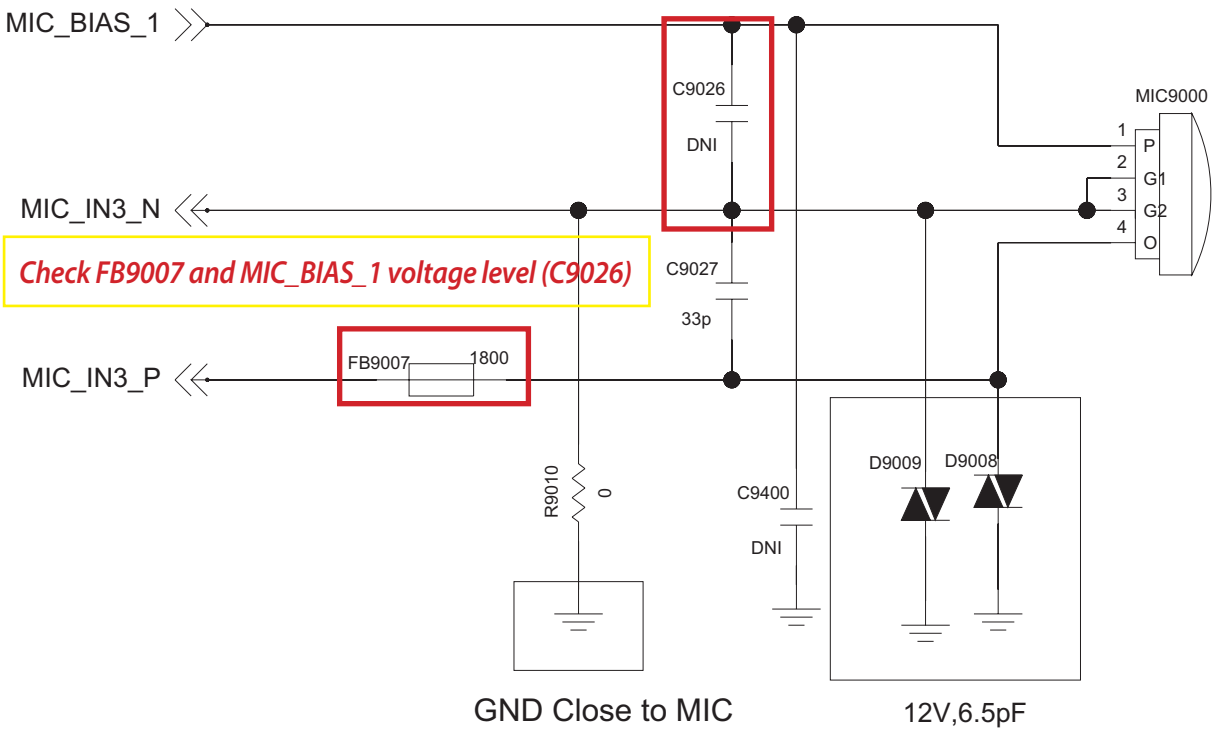

Copyright © 2014 LG Electronics. Inc. All right reserved.
Only for training and service purposes

3.8.6 Ear-Mic Trouble Shooting

Ear MIC control signals are generate by MSM8210(U2100)

Case A. Disable detected headset insert.

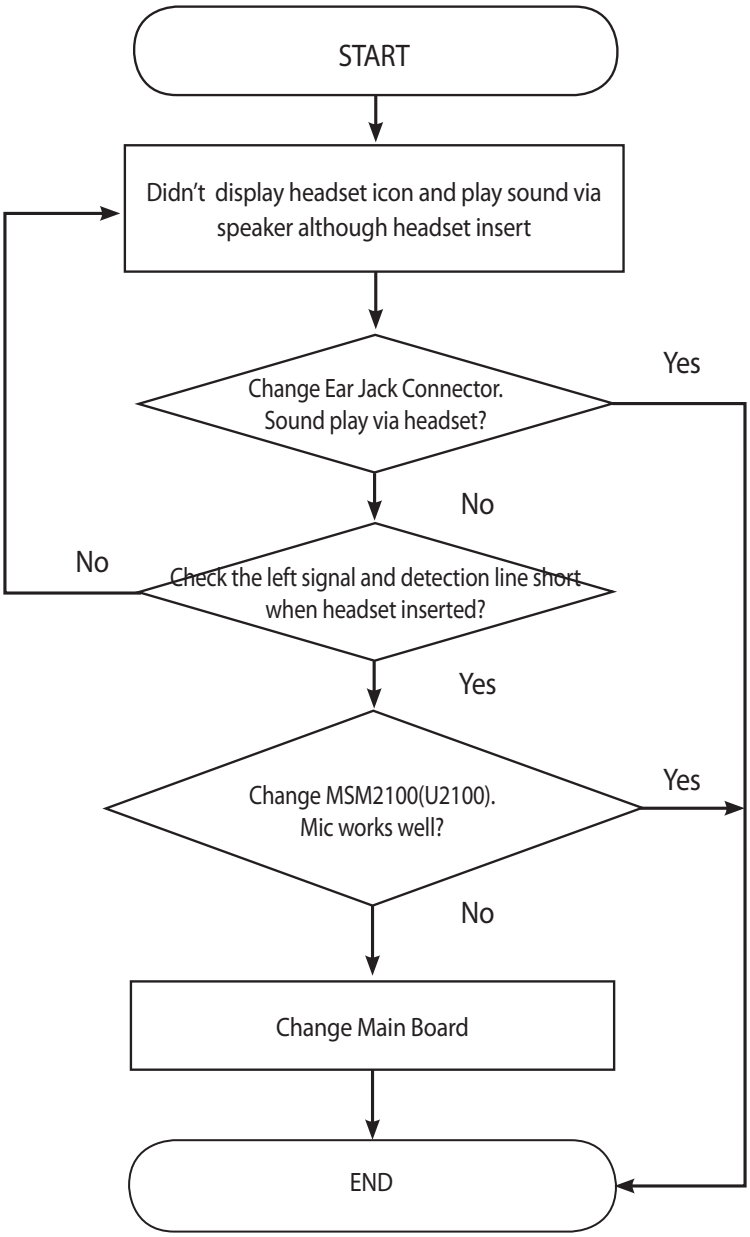

Copyright © 2014 LG Electronics. Inc. All right reserved.
Only for training and service purposes

Case A. Disable detected headset insert.

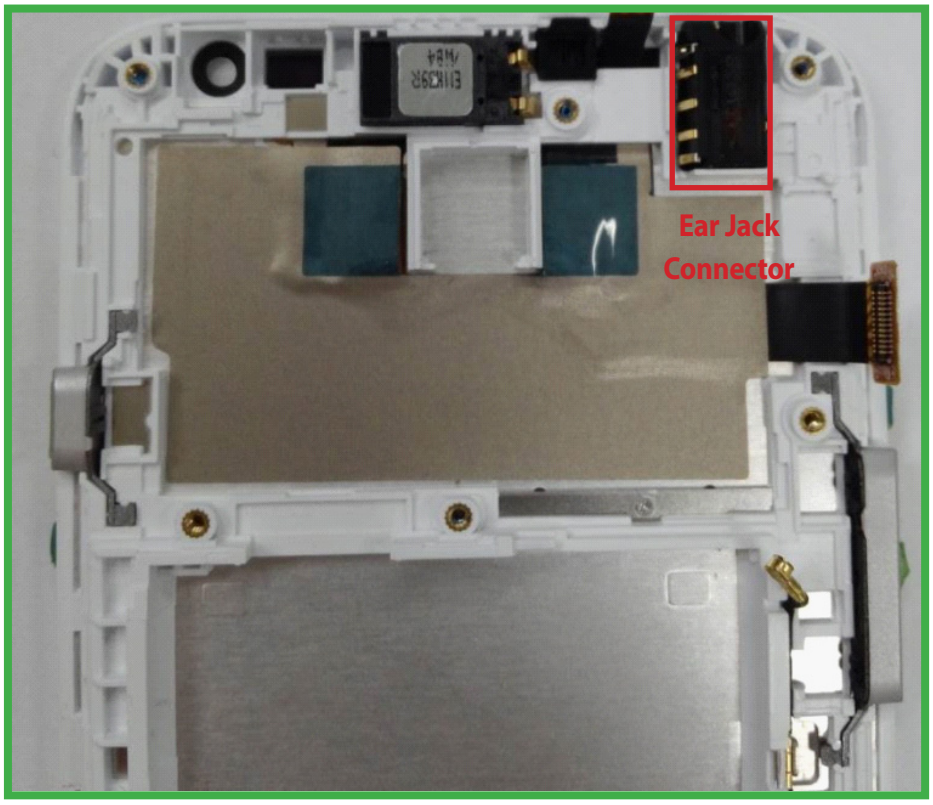

< 6-6-1_Earjack >

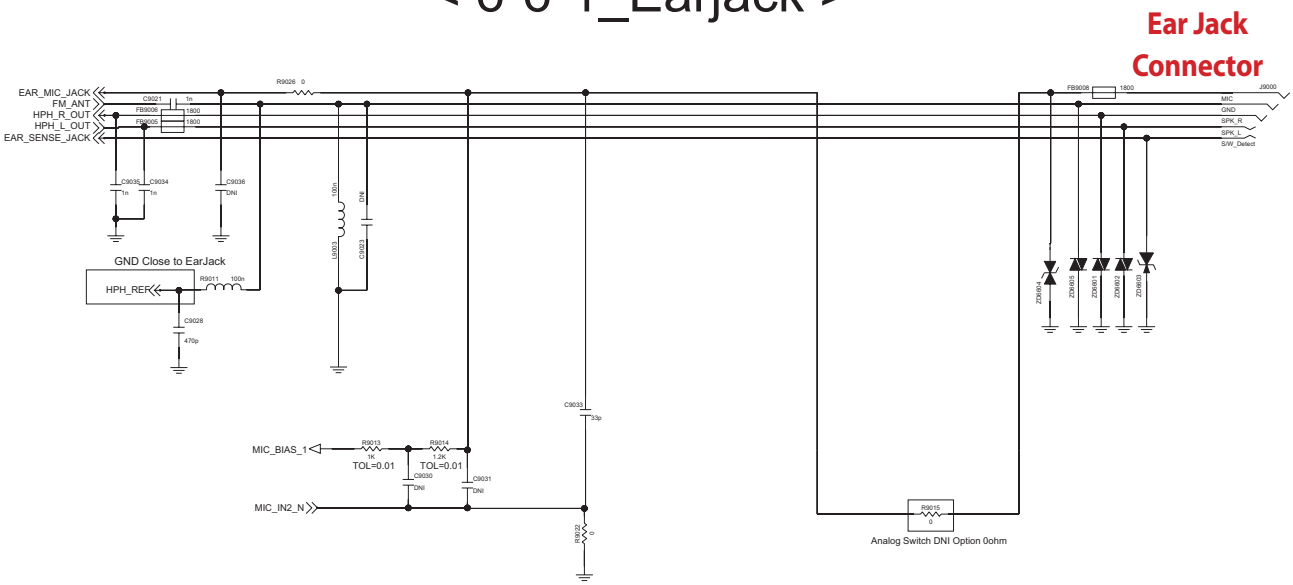

Copyright © 2014 LG Electronics. Inc. All right reserved.
Only for training and service purposes

Case B. No Sound from Headset

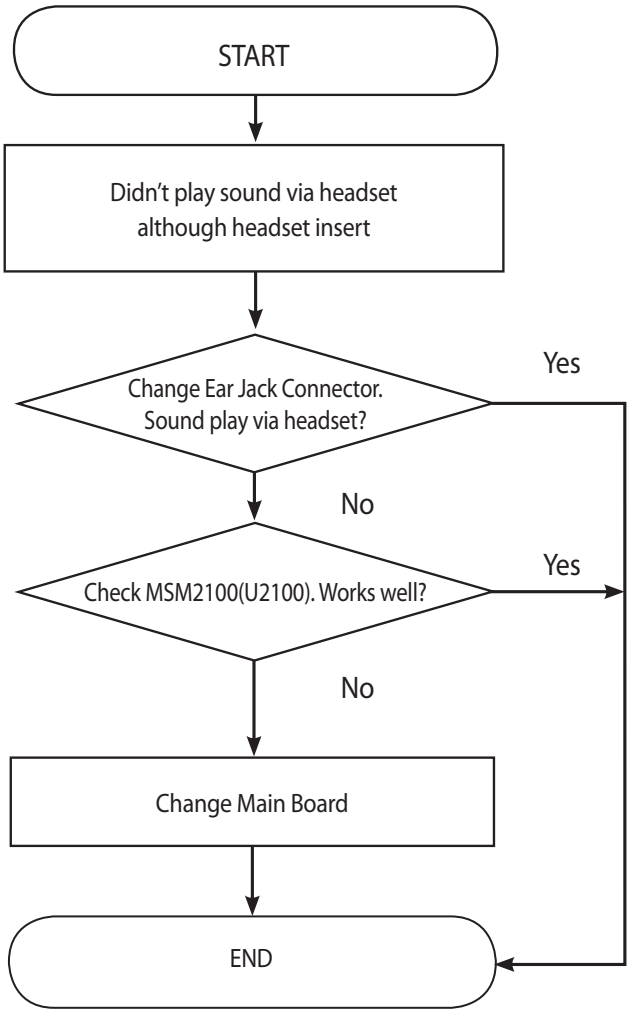

Copyright © 2014 LG Electronics. Inc. All right reserved.
Only for training and service purposes

Case B. No Sound from Headset

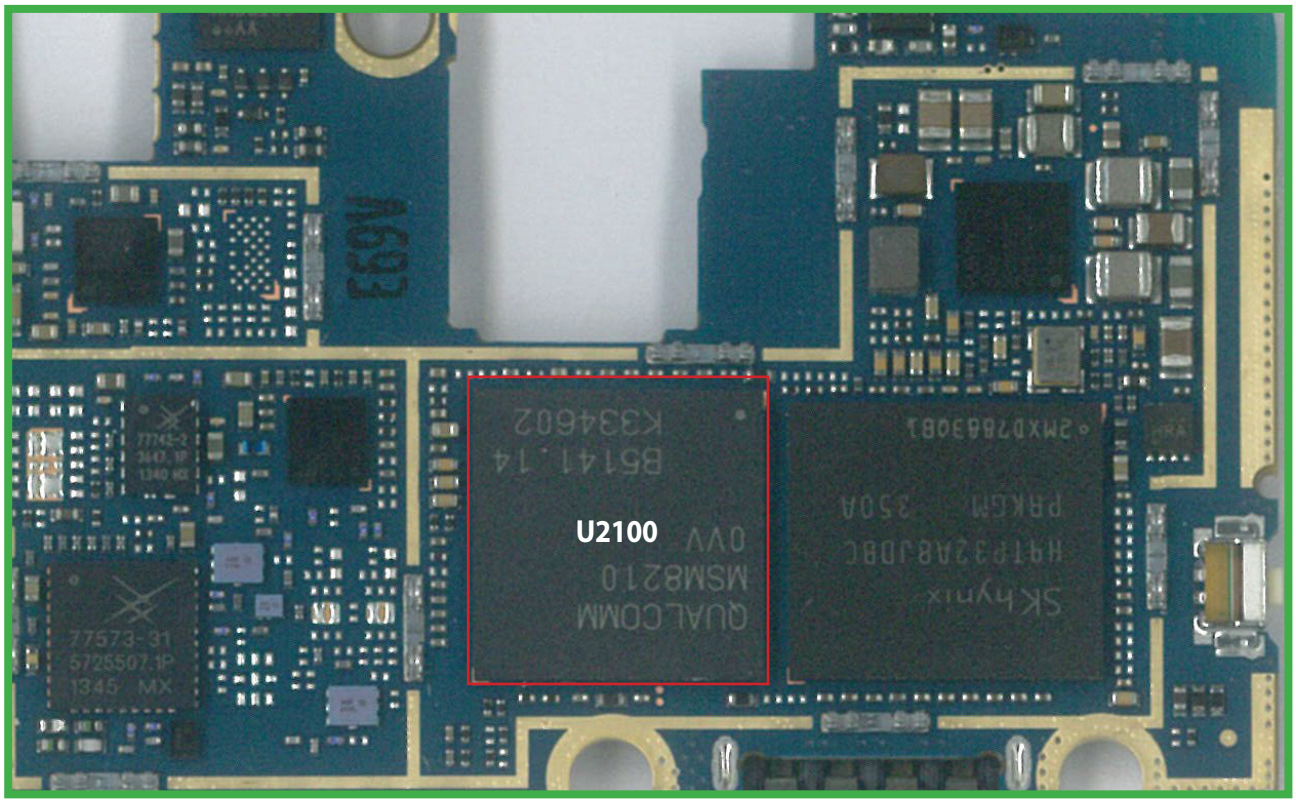

<Main Top>

Copyright © 2014 LG Electronics. Inc. All right reserved.
Only for training and service purposes

3.9 3 AXIS Sensor

The 3 AXIS sensor is calibrated by the sensor data using SW algorithm.
Therefore sensor error makes the compass sensor malfunction.

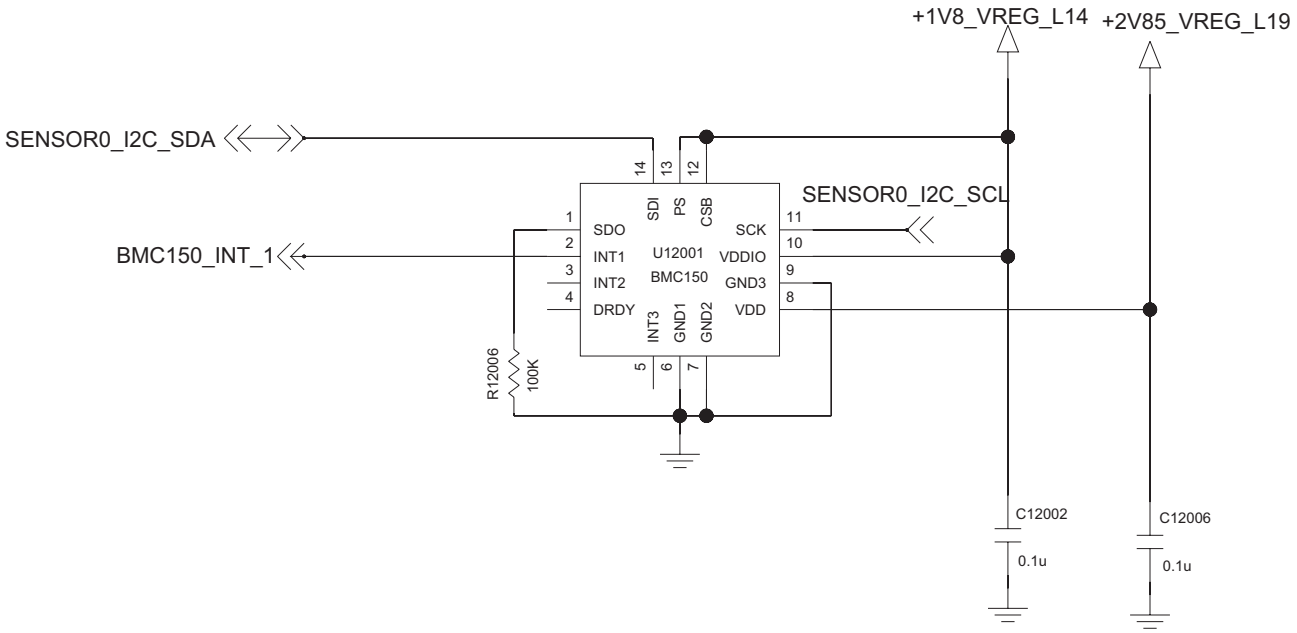

3 AXIS Sensor

Copyright © 2014 LG Electronics. Inc. All right reserved.
Only for training and service purposes

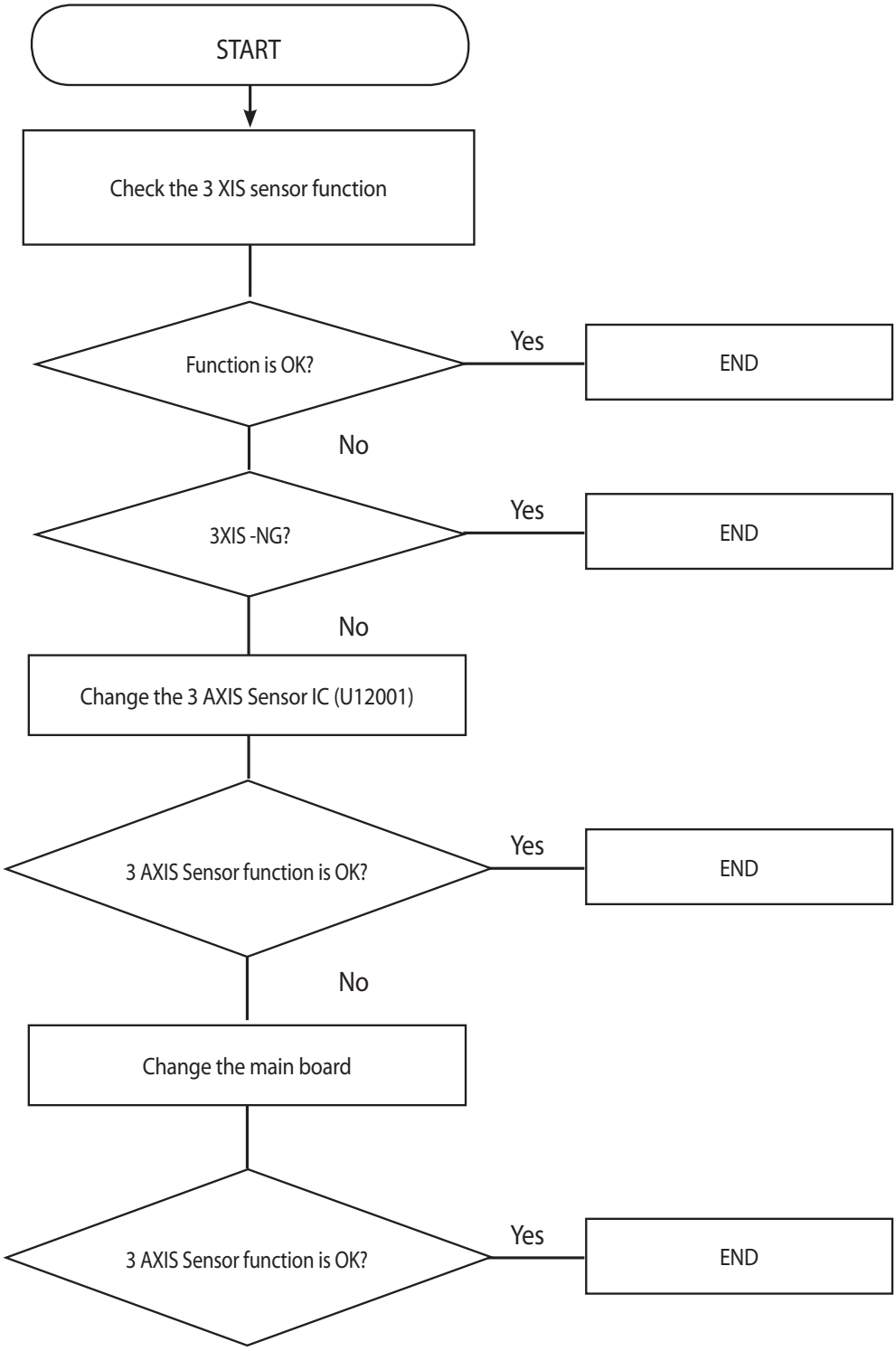

Copyright © 2014 LG Electronics. Inc. All right reserved.
Only for training and service purposes

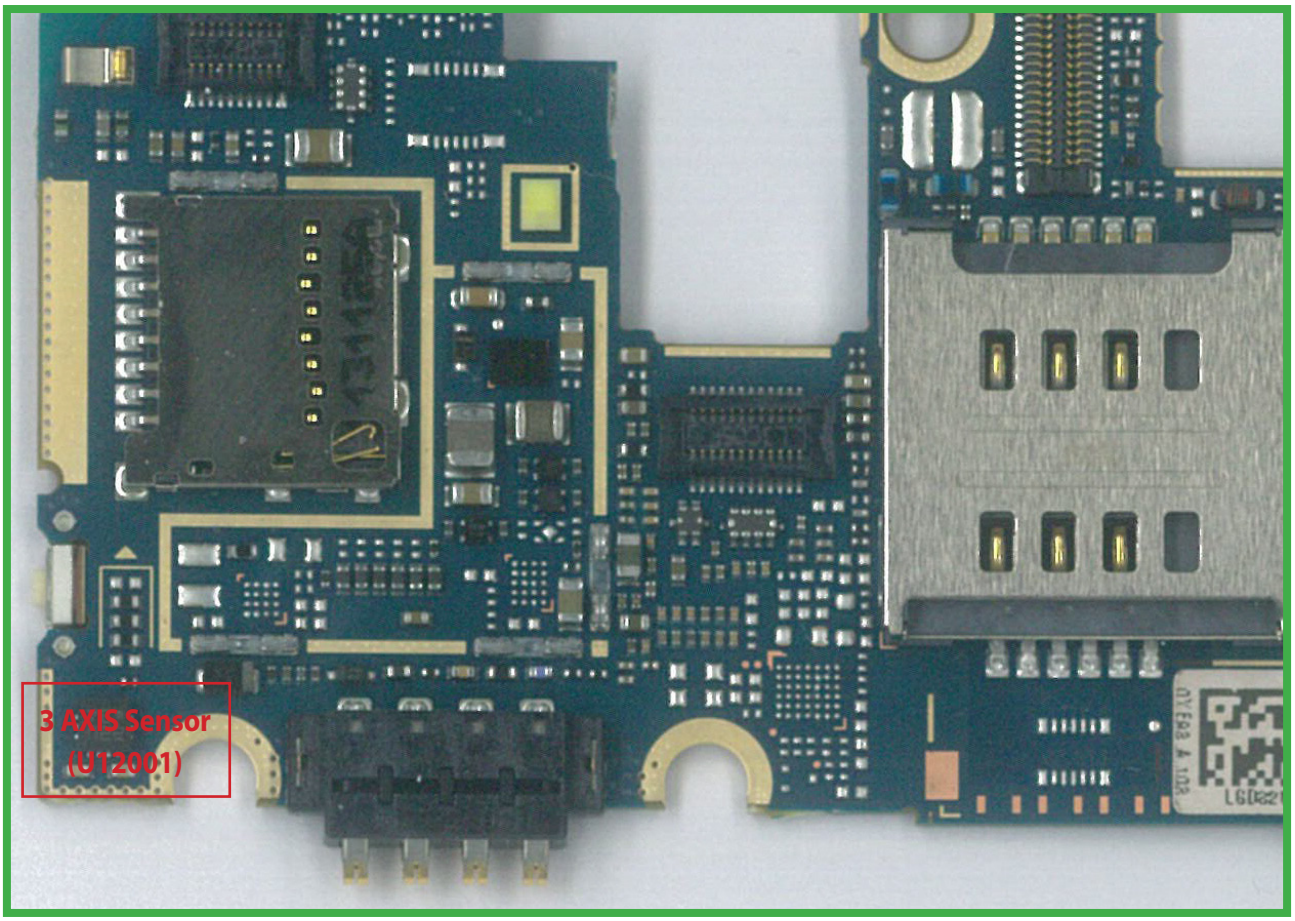

<Main Bot>

Copyright © 2014 LG Electronics. Inc. All right reserved.
Only for training and service purposes

3.10 Proximity Sensor

Proximity Sensor is worked as below:

Send Key click -> Phone number click -> Call connected -> Object moved at the sensor -> Control the screen's on/off operation automatically

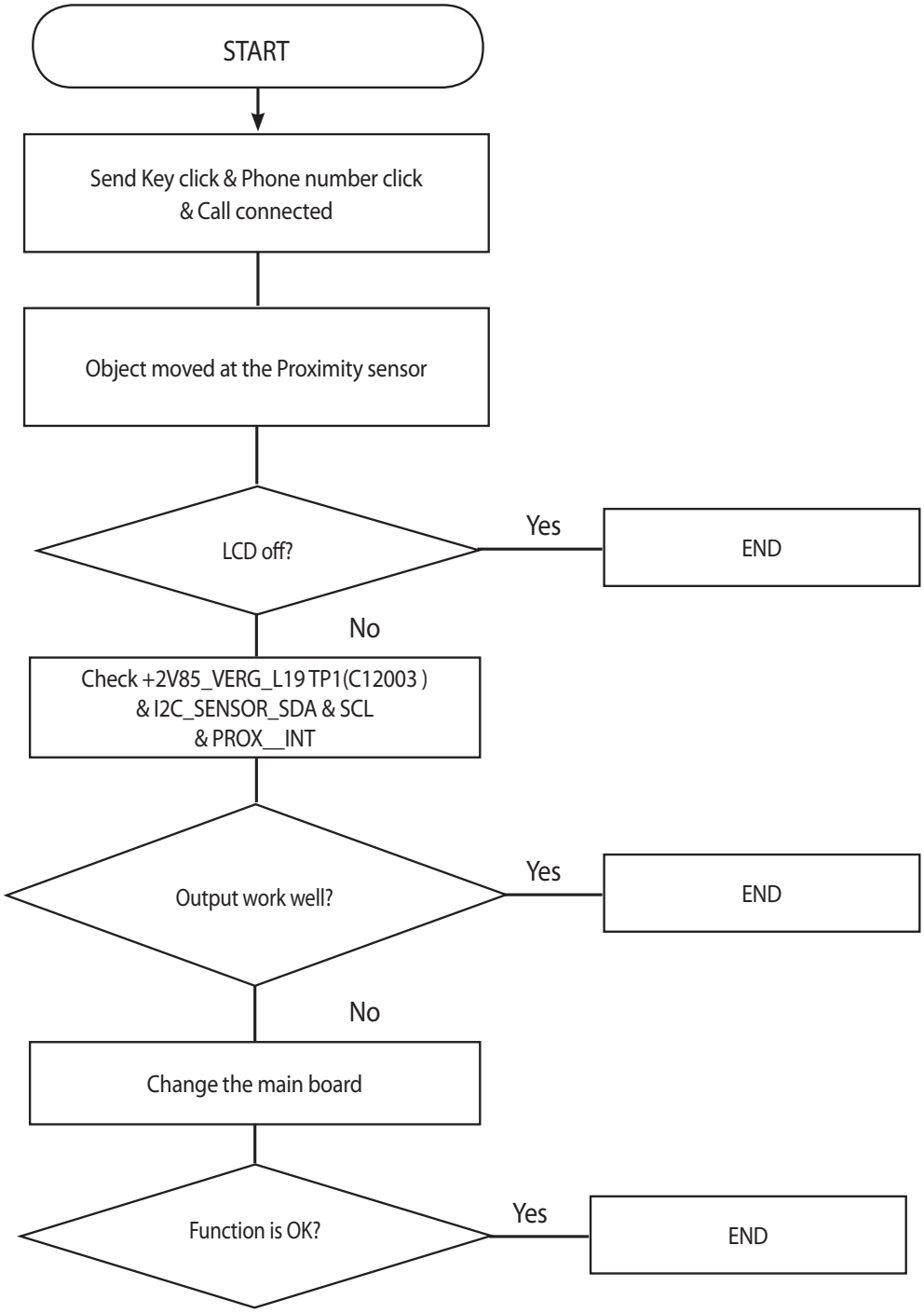

Copyright © 2014 LG Electronics. Inc. All right reserved.
Only for training and service purposes

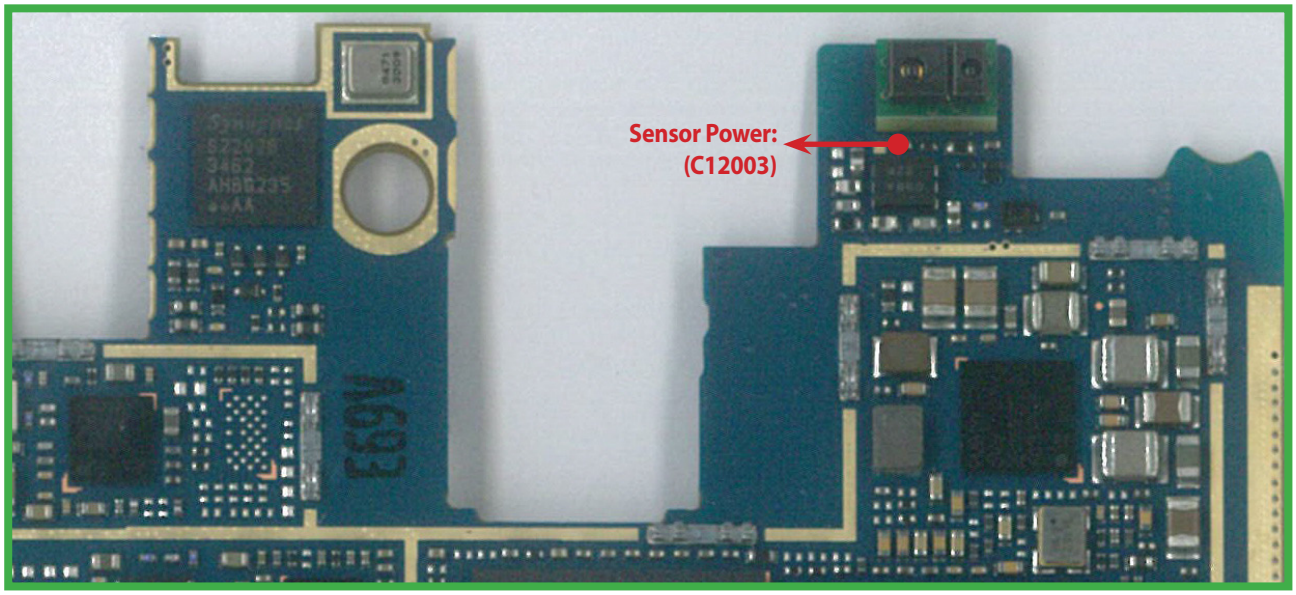

<Main Top>

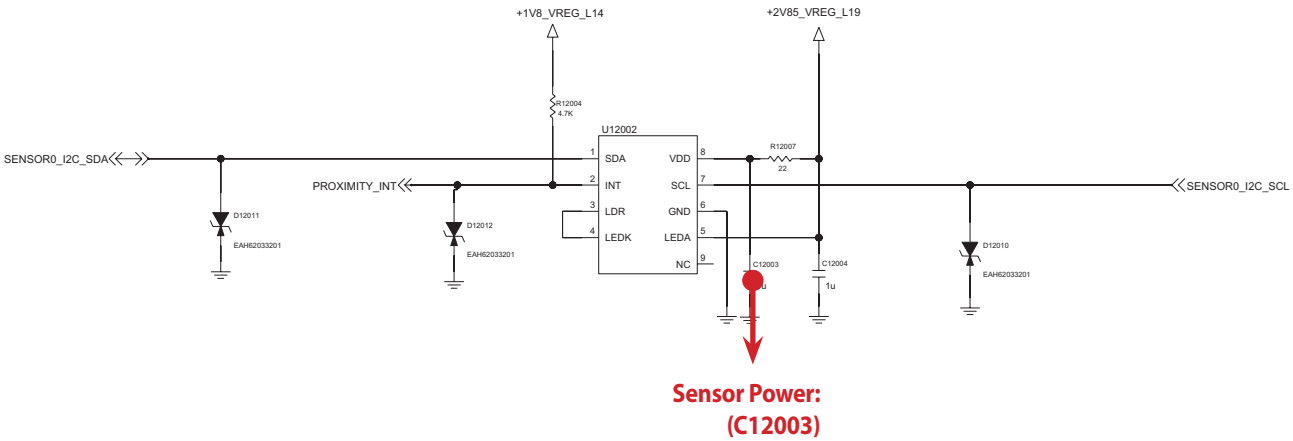

Copyright © 2014 LG Electronics. Inc. All right reserved.
Only for training and service purposes

3.11 Touch Sensor Trouble Shooting

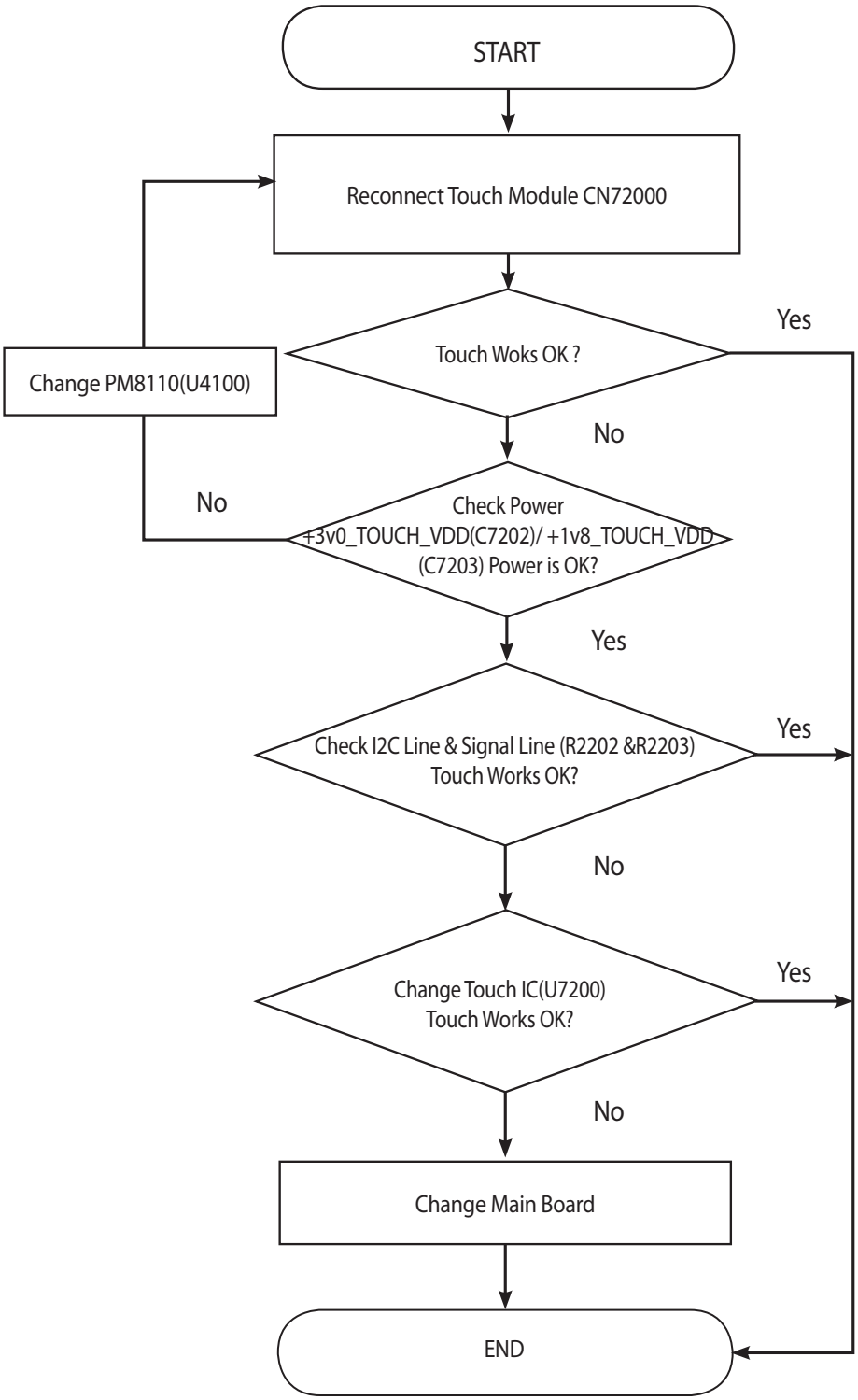

Copyright © 2014 LG Electronics. Inc. All right reserved.
Only for training and service purposes

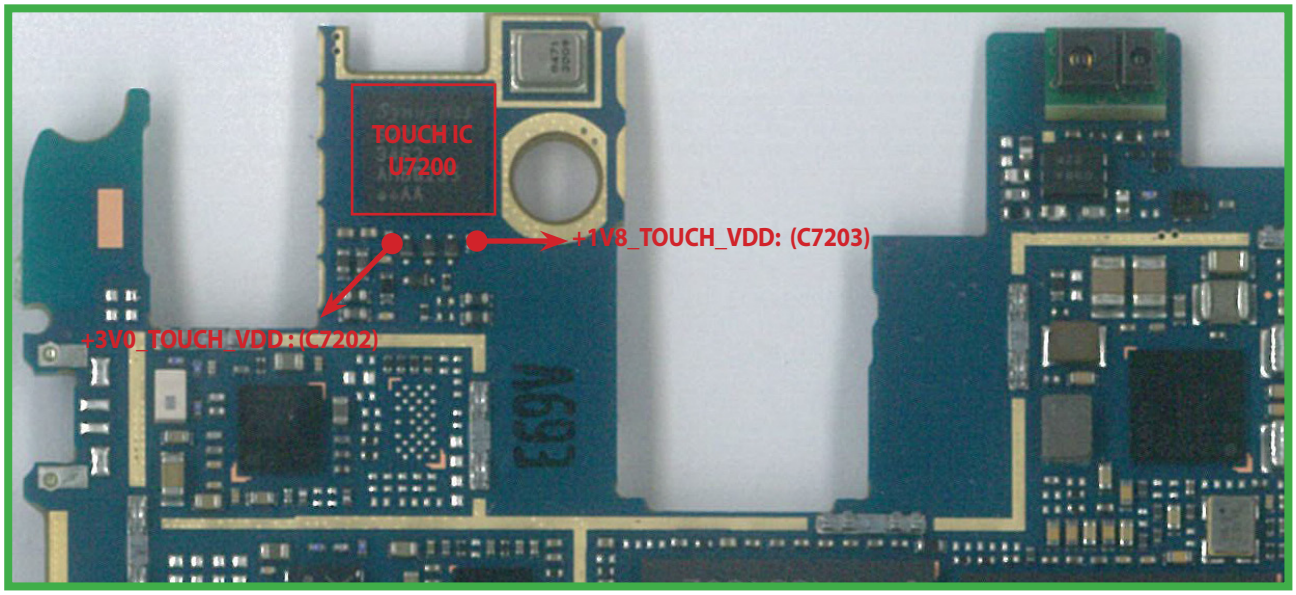

<Main Top>

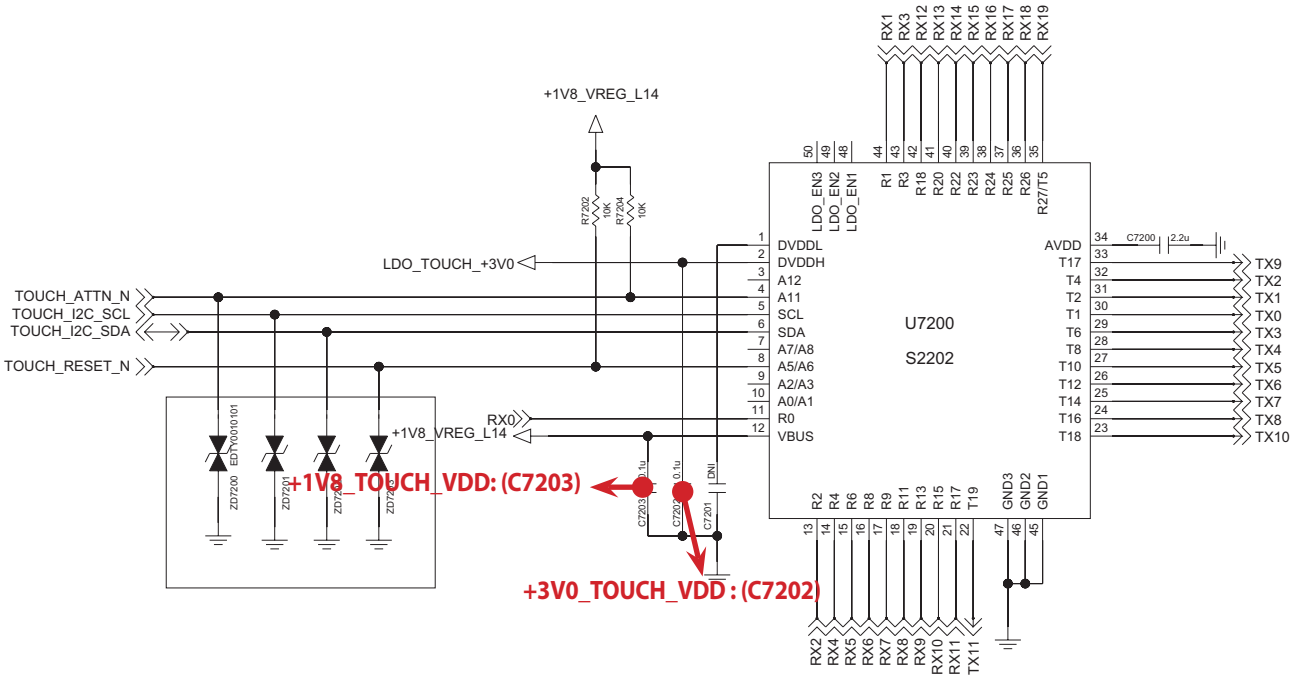

Copyright © 2014 LG Electronics. Inc. All right reserved.
Only for training and service purposes

3.12 Vibrator Trouble Shooting

Vibrator signal path is PM8110(U4100) -> Vibrator. Motor Type is DC Motor

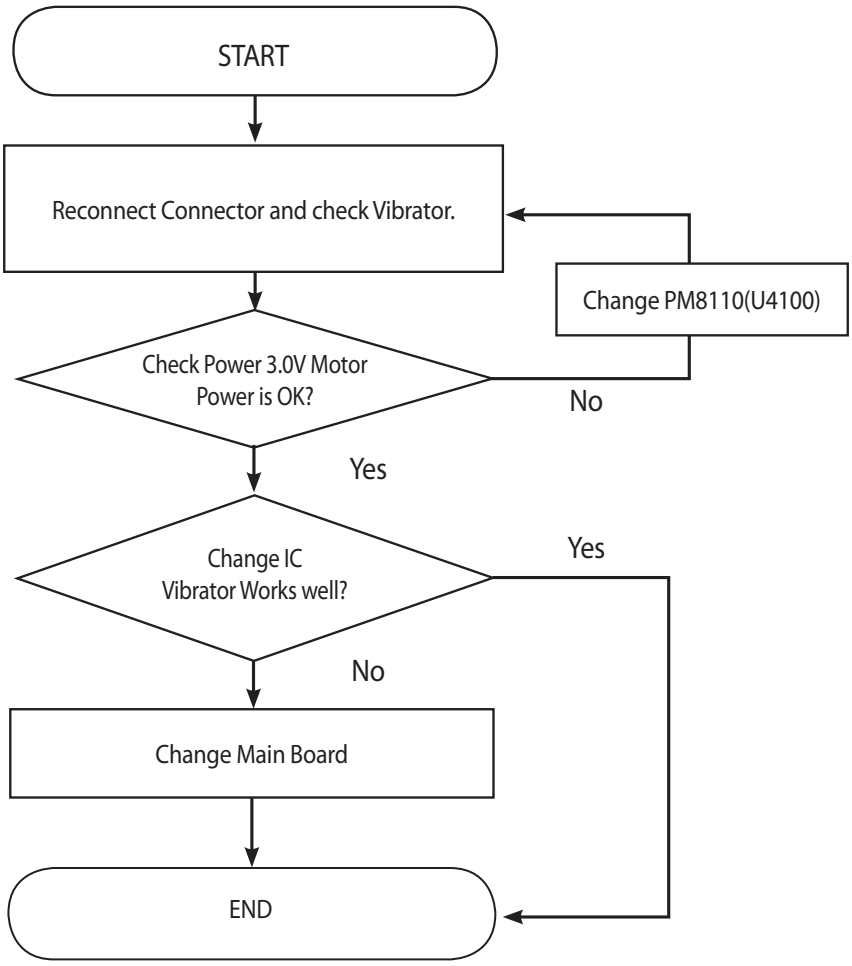

Copyright © 2014 LG Electronics. Inc. All right reserved.
Only for training and service purposes

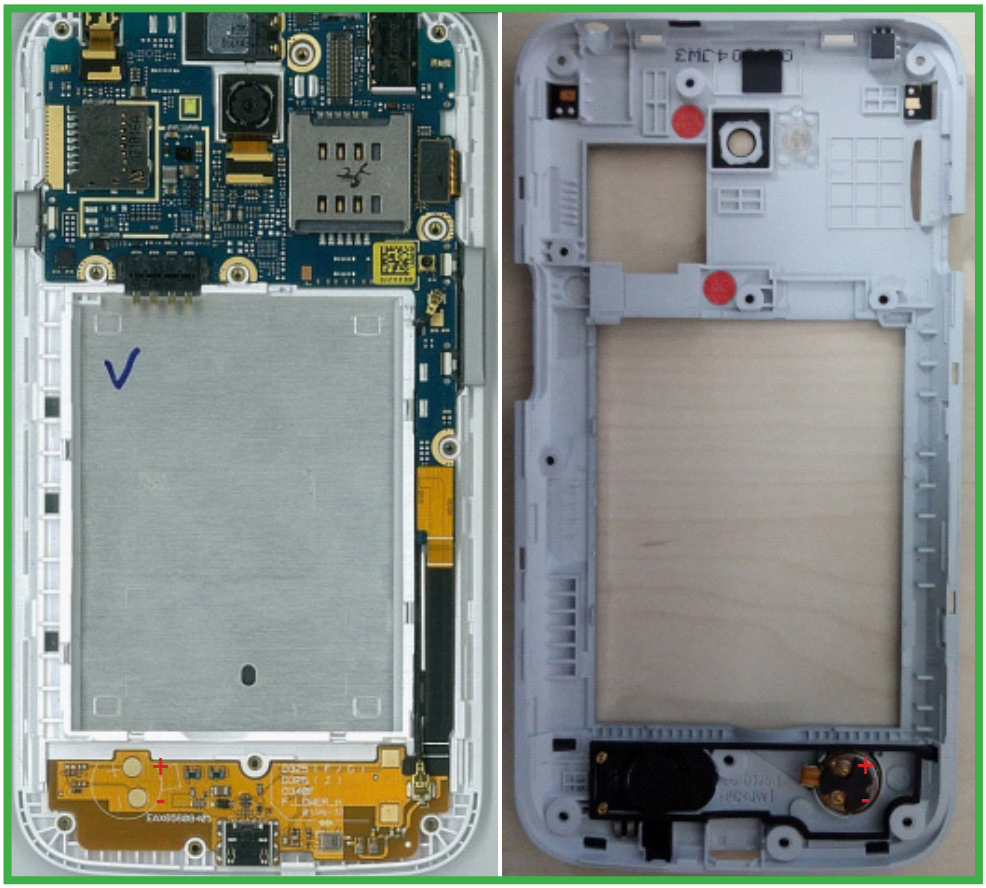

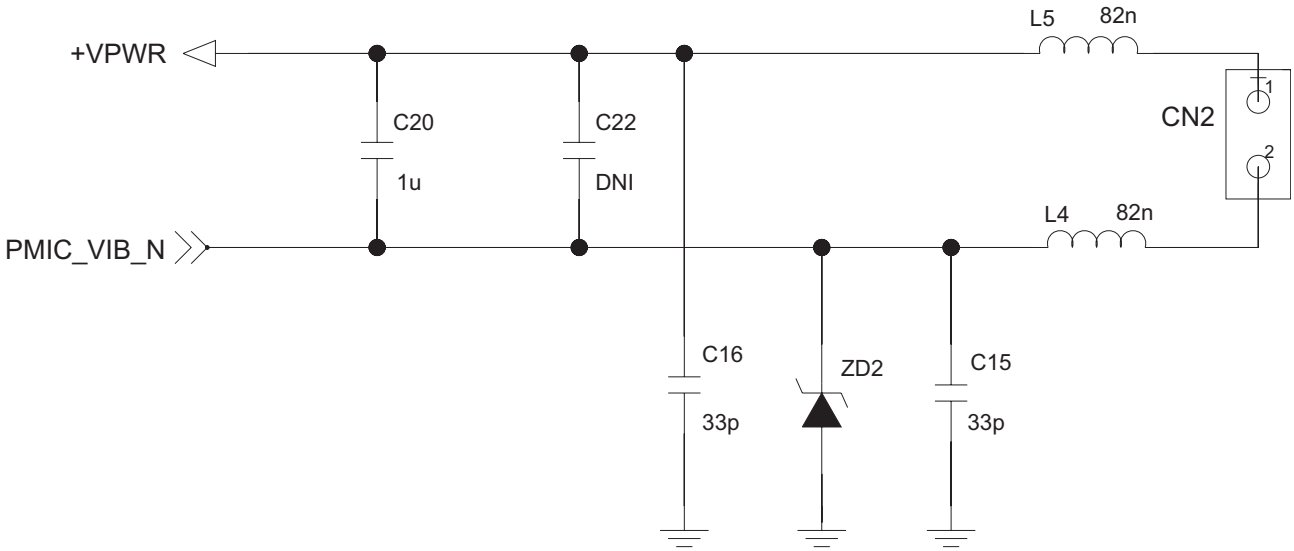

Motor

Copyright © 2014 LG Electronics. Inc. All right reserved.
Only for training and service purposes

3.13 5M Main Camera TS

5M camera control signals are generated by voltage regulator (U4136 : LDO) and powered by PM8110(U4100 : Main Chipset).

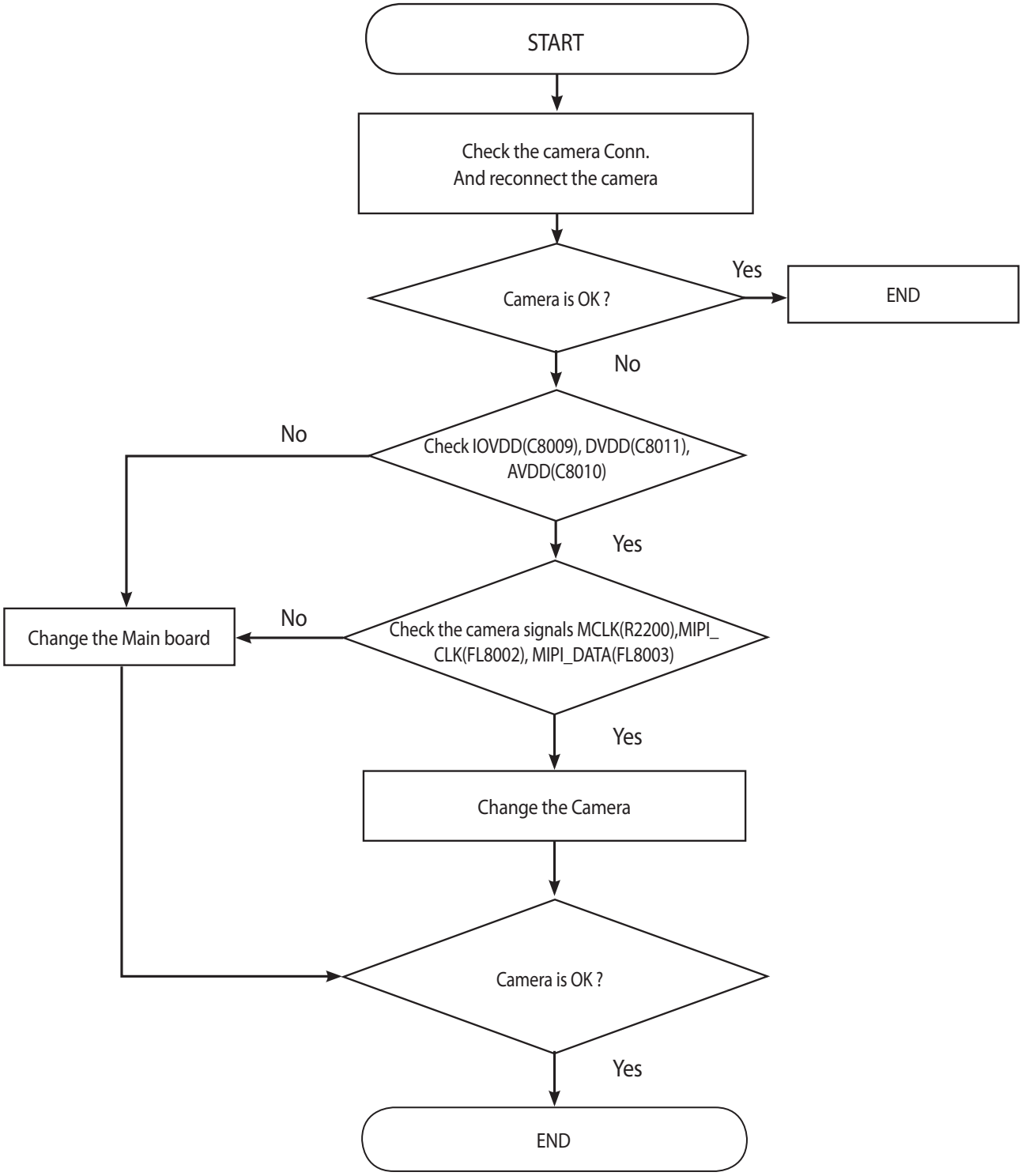

Copyright © 2014 LG Electronics. Inc. All right reserved.
Only for training and service purposes

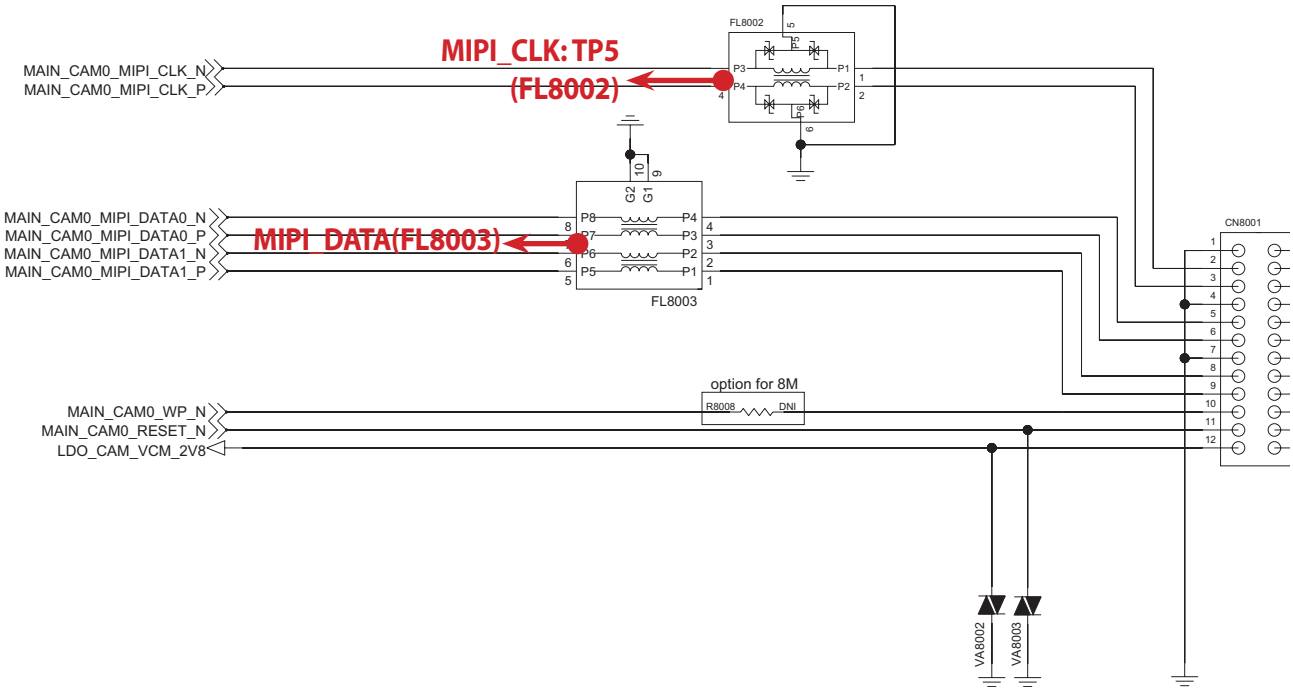

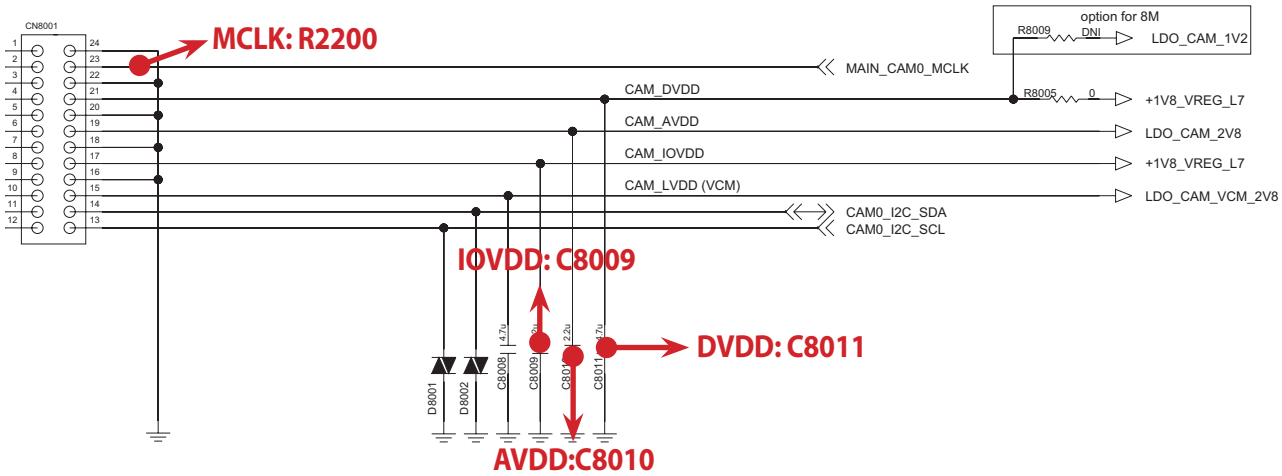

Copyright © 2014 LG Electronics. Inc. All right reserved.
Only for training and service purposes

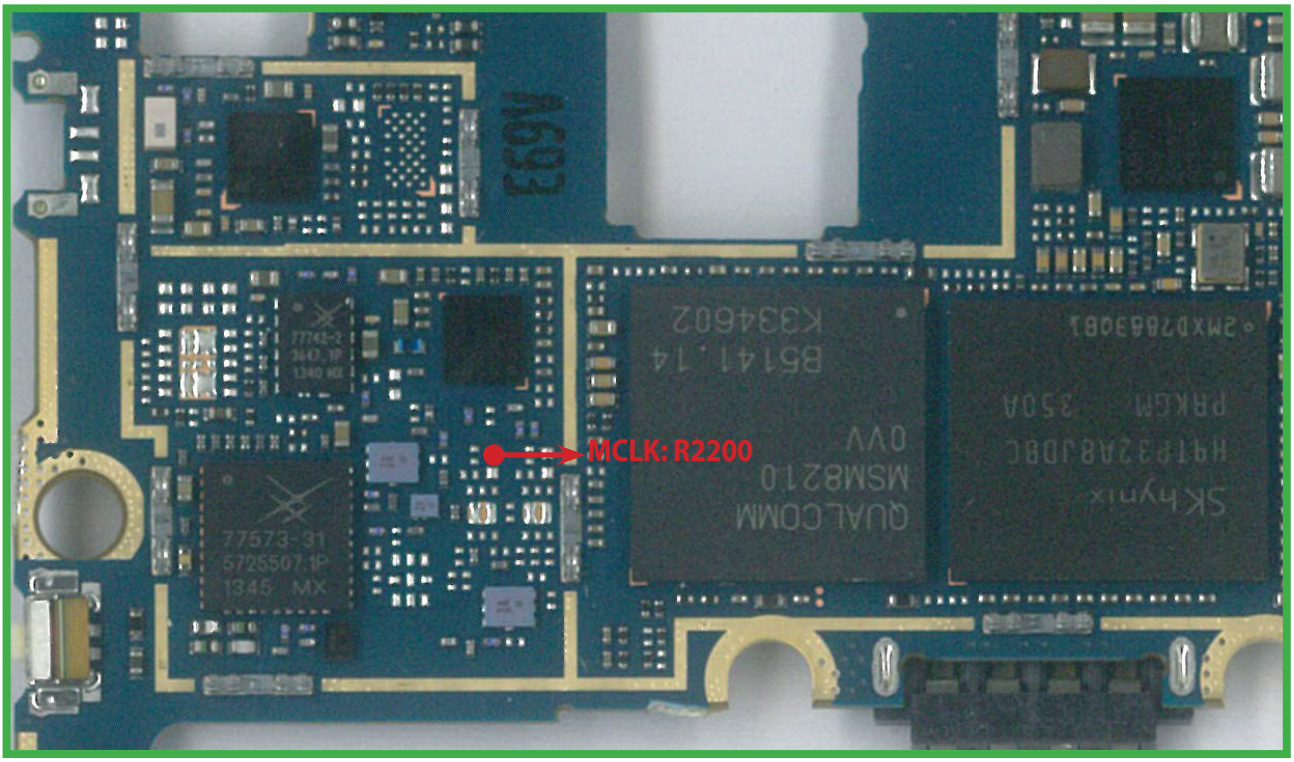

<Main Top>

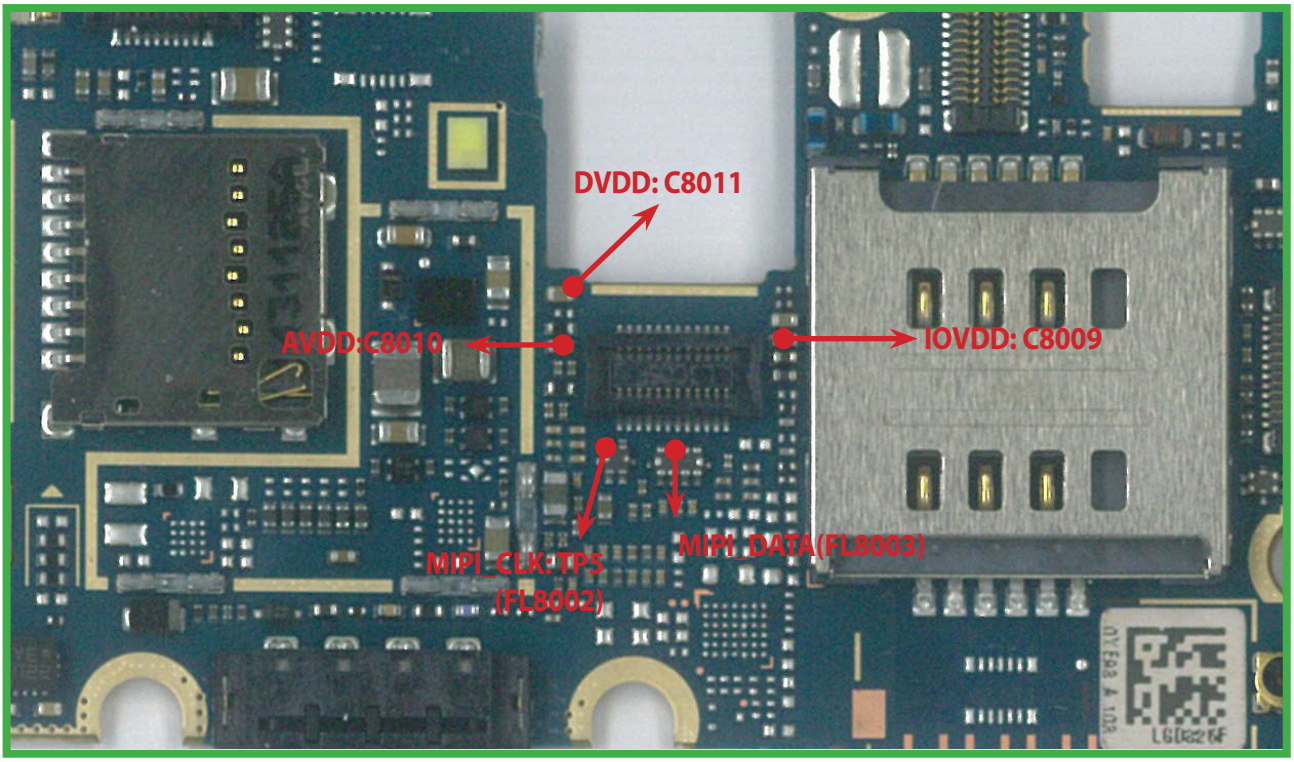

<Main Bot>

Copyright © 2014 LG Electronics. Inc. All right reserved.
Only for training and service purposes

3.14 Main LCD TS

The LCD control signals are generated by MSM8210. It needs two external powers like +1.8V_VREG_L14 and +2.85V_VREG_L19. And its interface is MIPI having two data lanes and one clock lane.

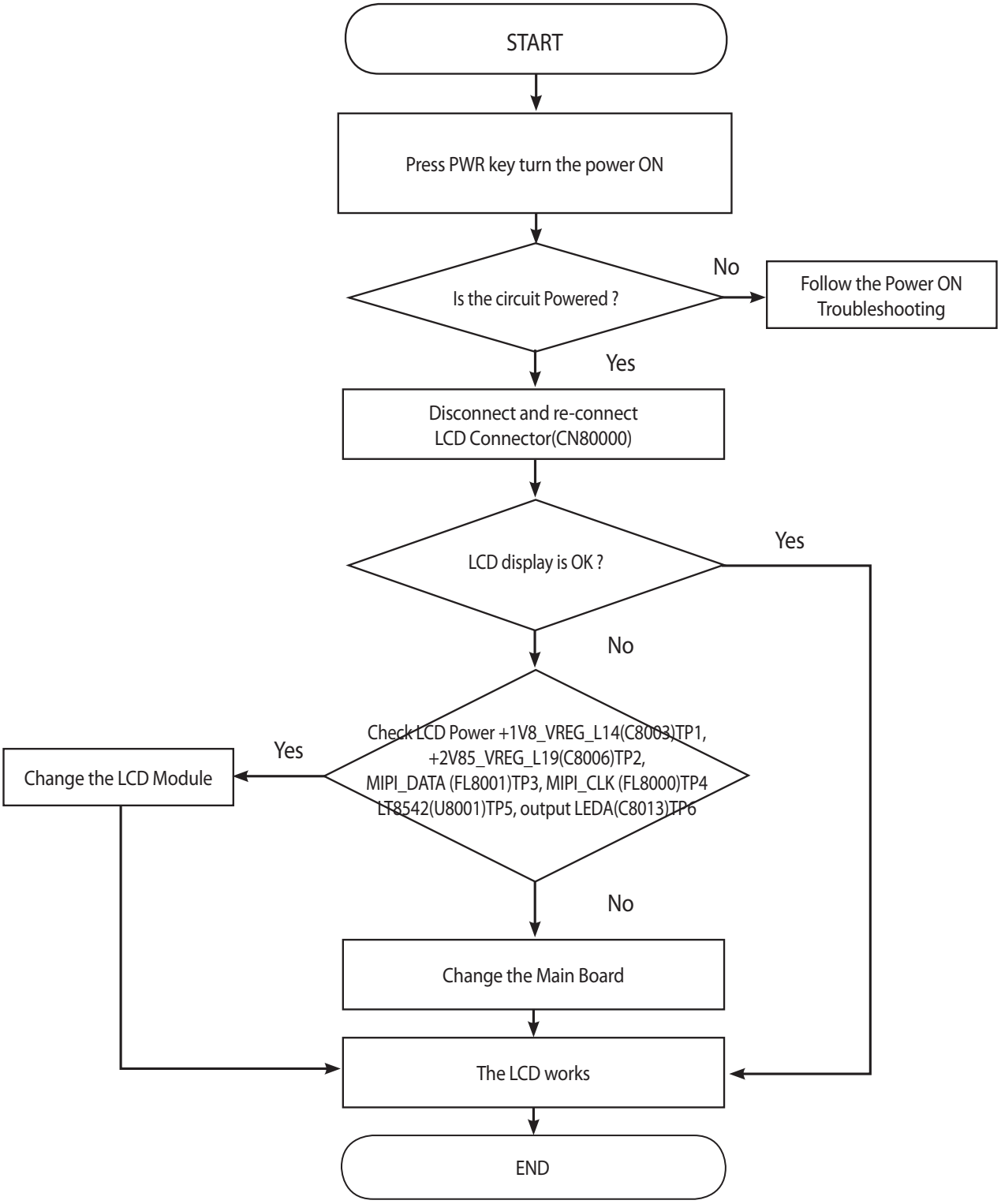

Copyright © 2014 LG Electronics. Inc. All right reserved.
Only for training and service purposes

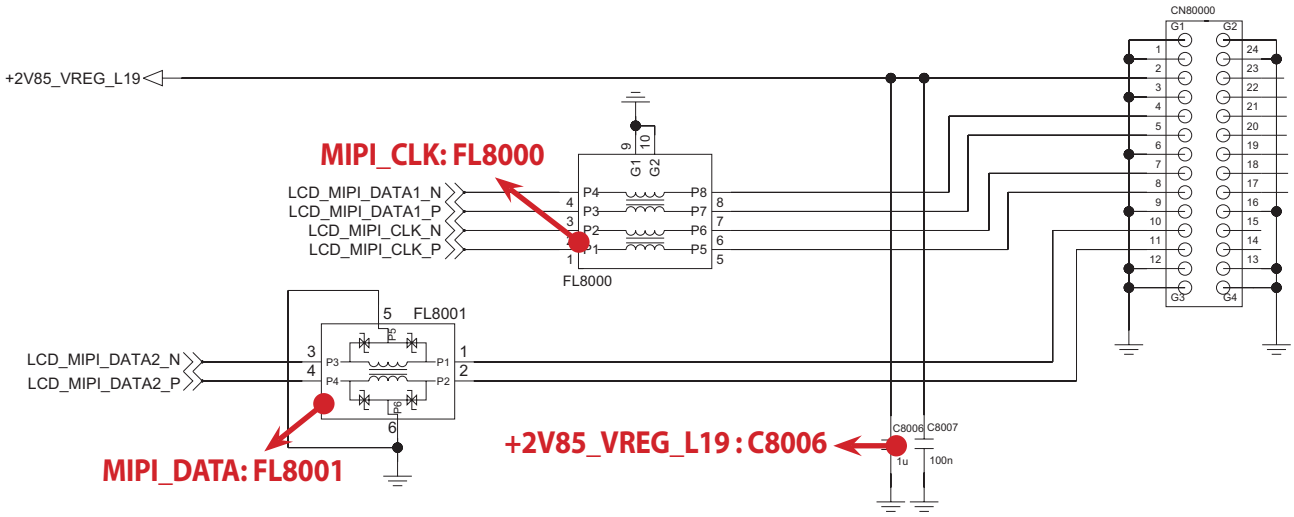

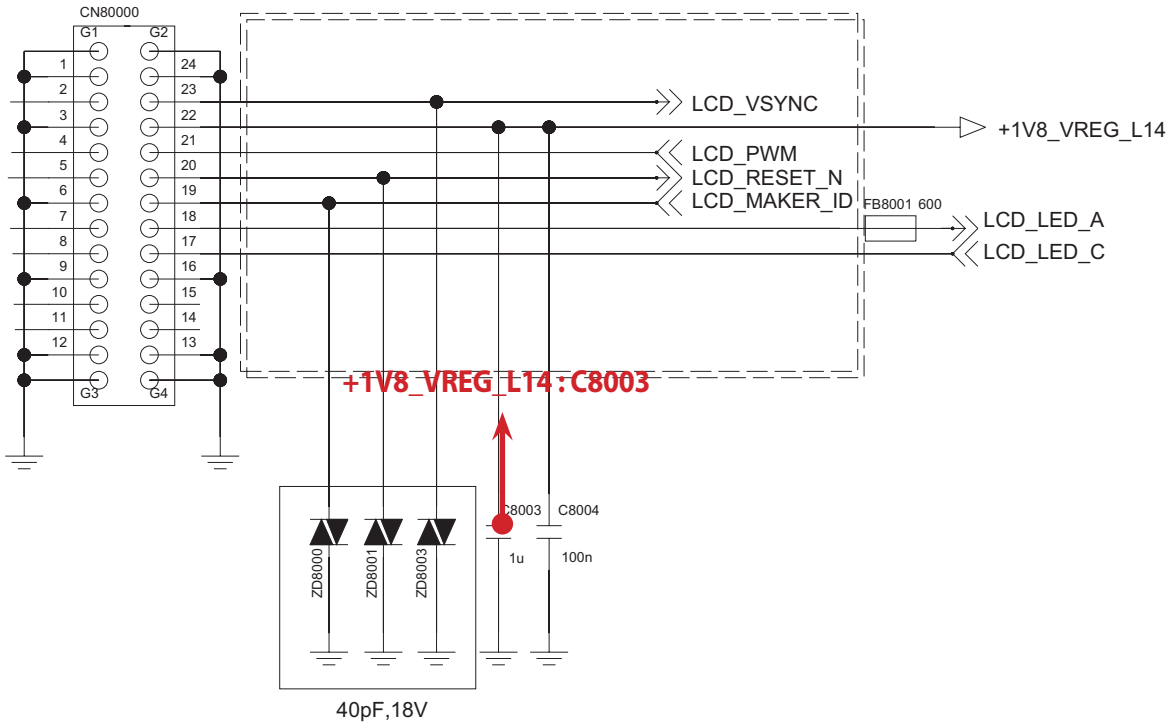

Copyright © 2014 LG Electronics. Inc. All right reserved.
Only for training and service purposes

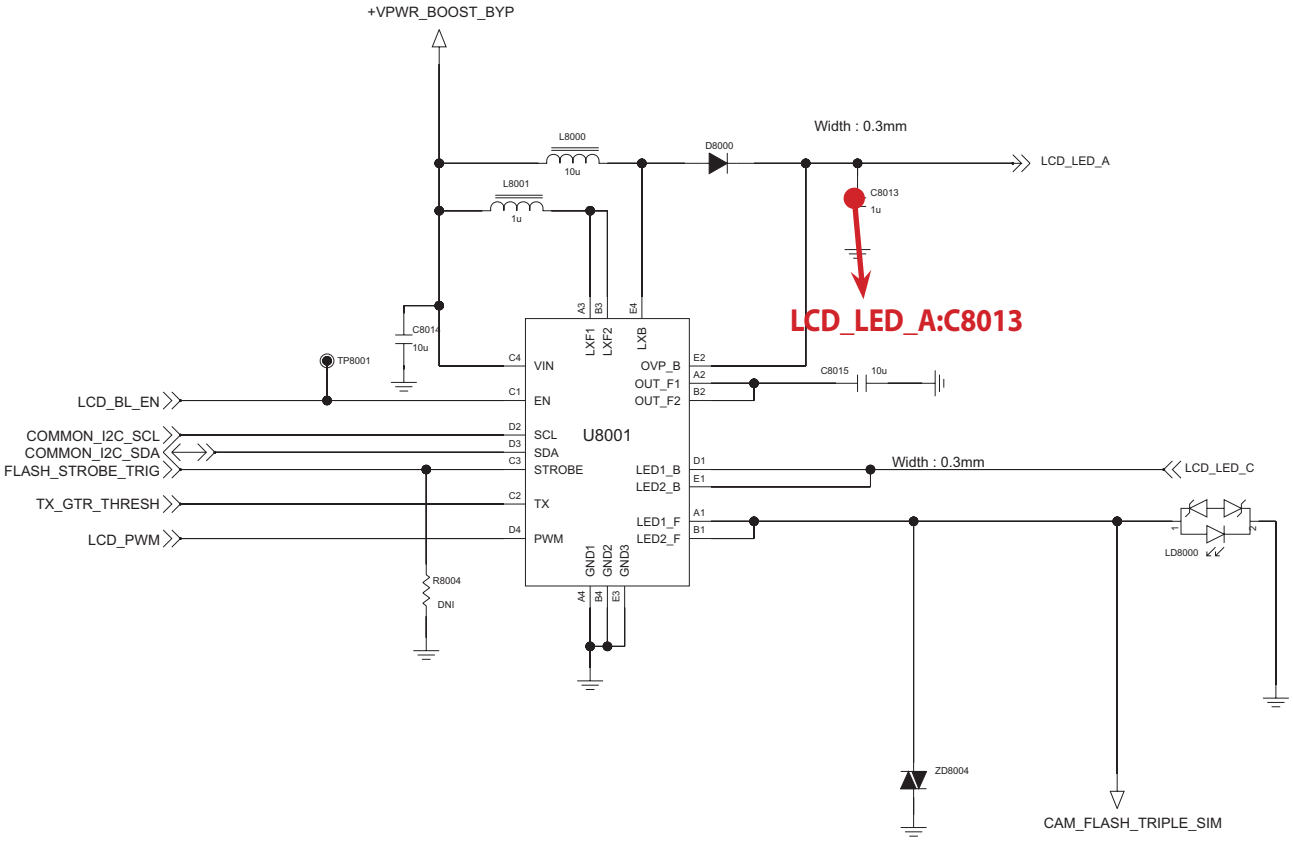

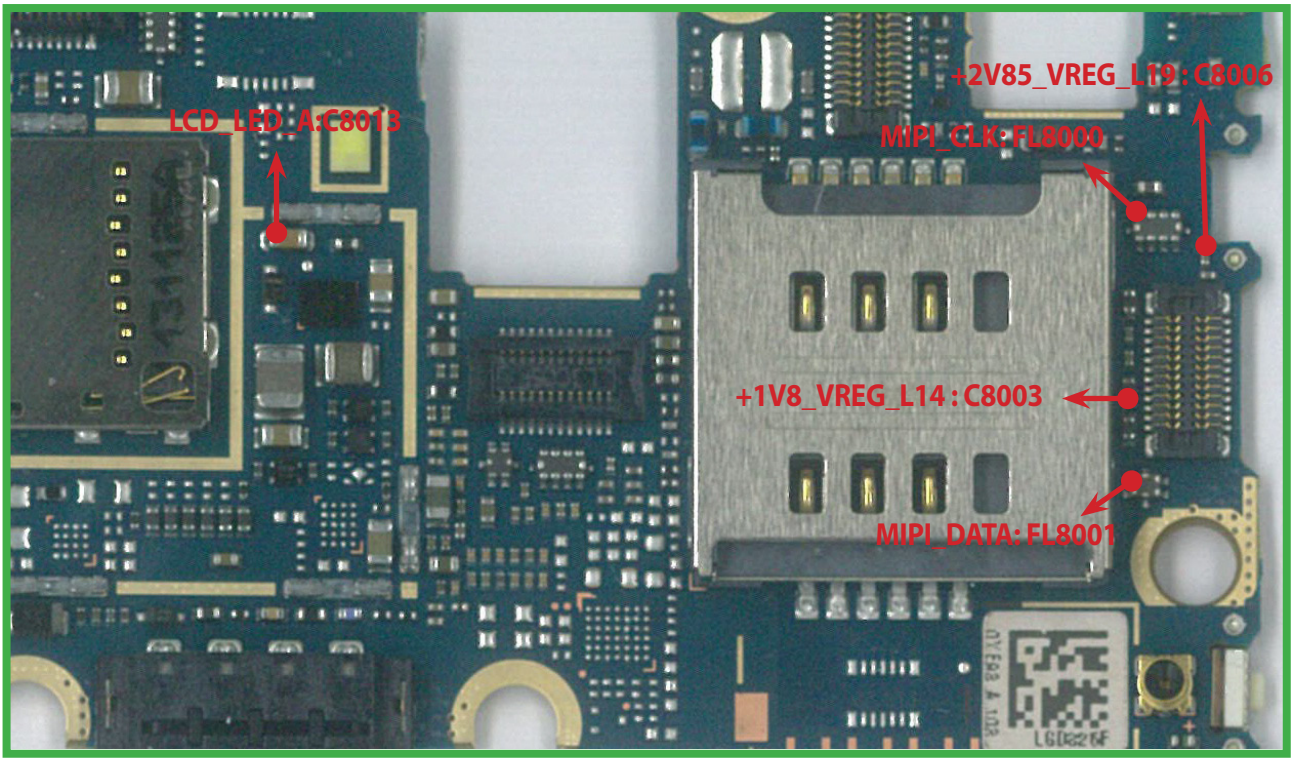

<Main Bot>

Copyright © 2014 LG Electronics. Inc. All right reserved.
Only for training and service purposes

3.15 BT/Wifi TS

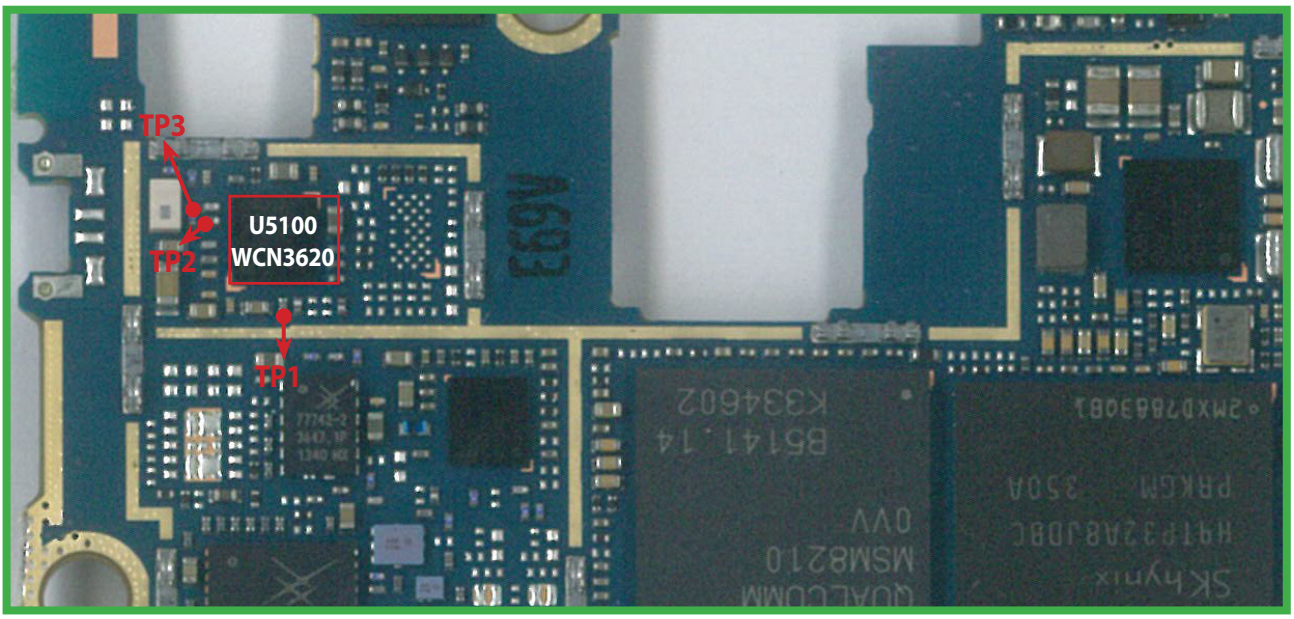

<Main Top>

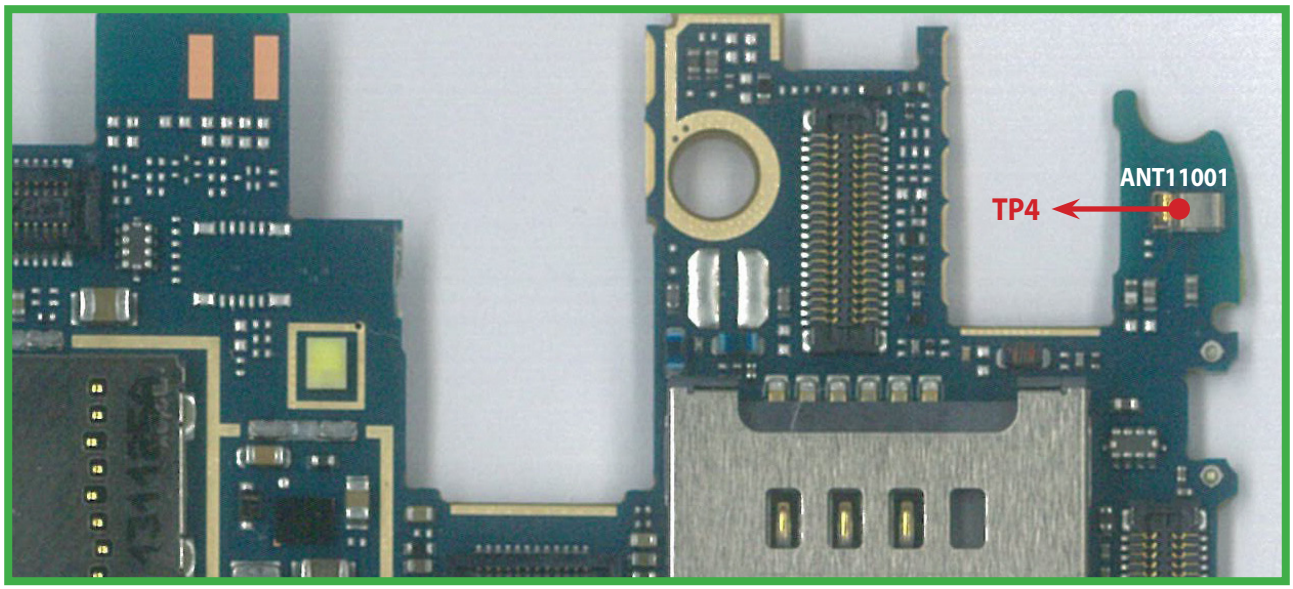

<Main Bot>

Copyright © 2014 LG Electronics. Inc. All right reserved.
Only for training and service purposes

RF Filter

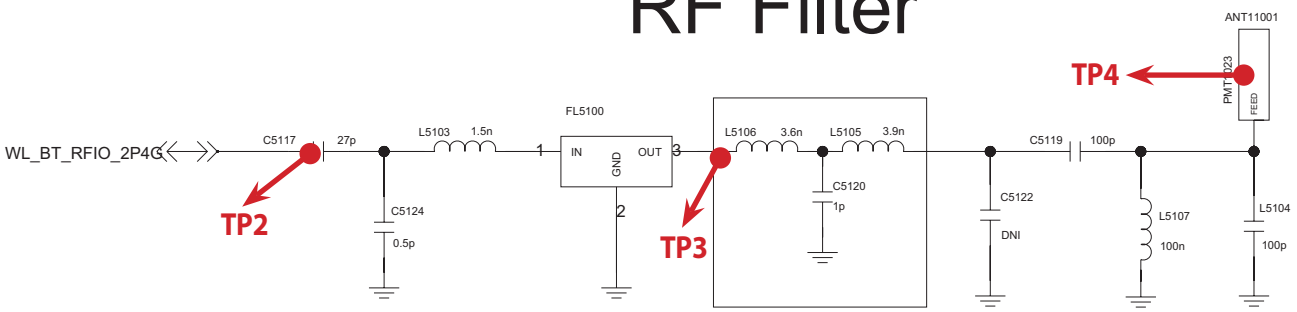

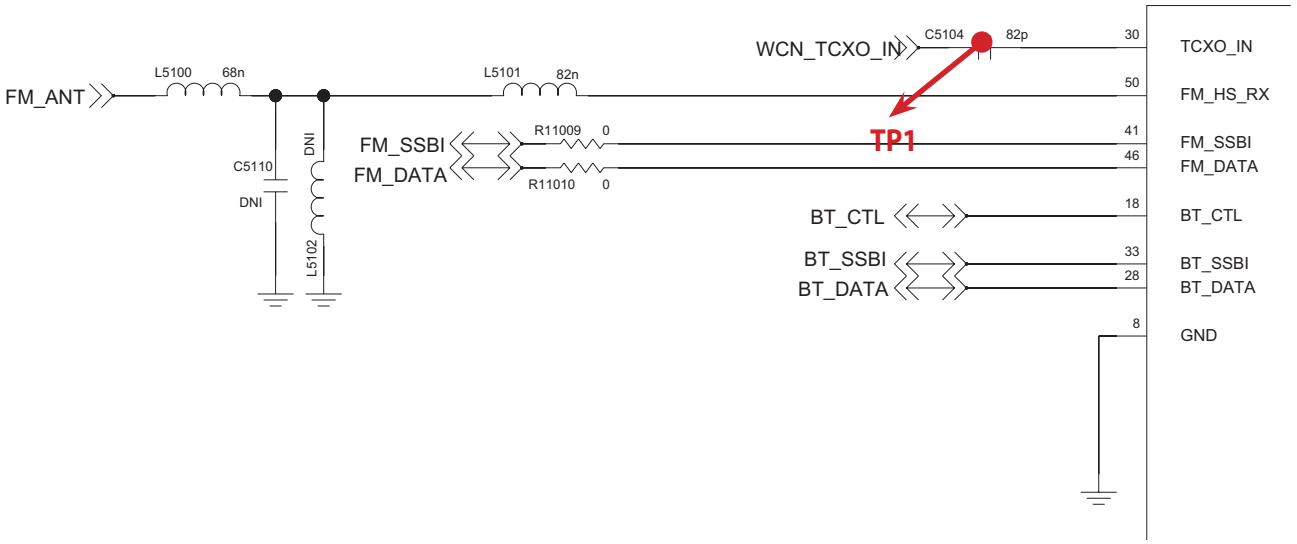

Copyright © 2014 LG Electronics. Inc. All right reserved.
Only for training and service purposes

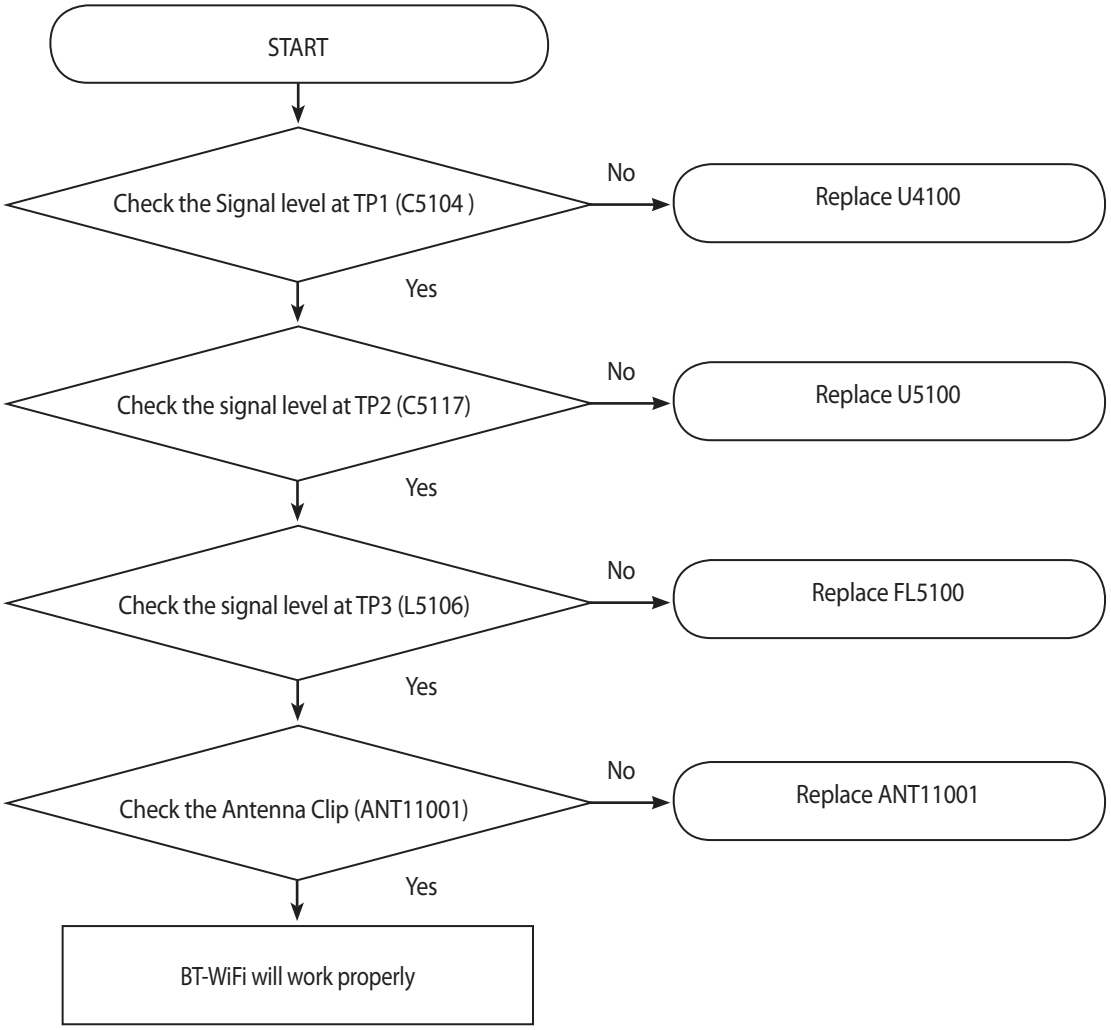

Copyright © 2014 LG Electronics. Inc. All right reserved.
Only for training and service purposes

3.16 GPS TS

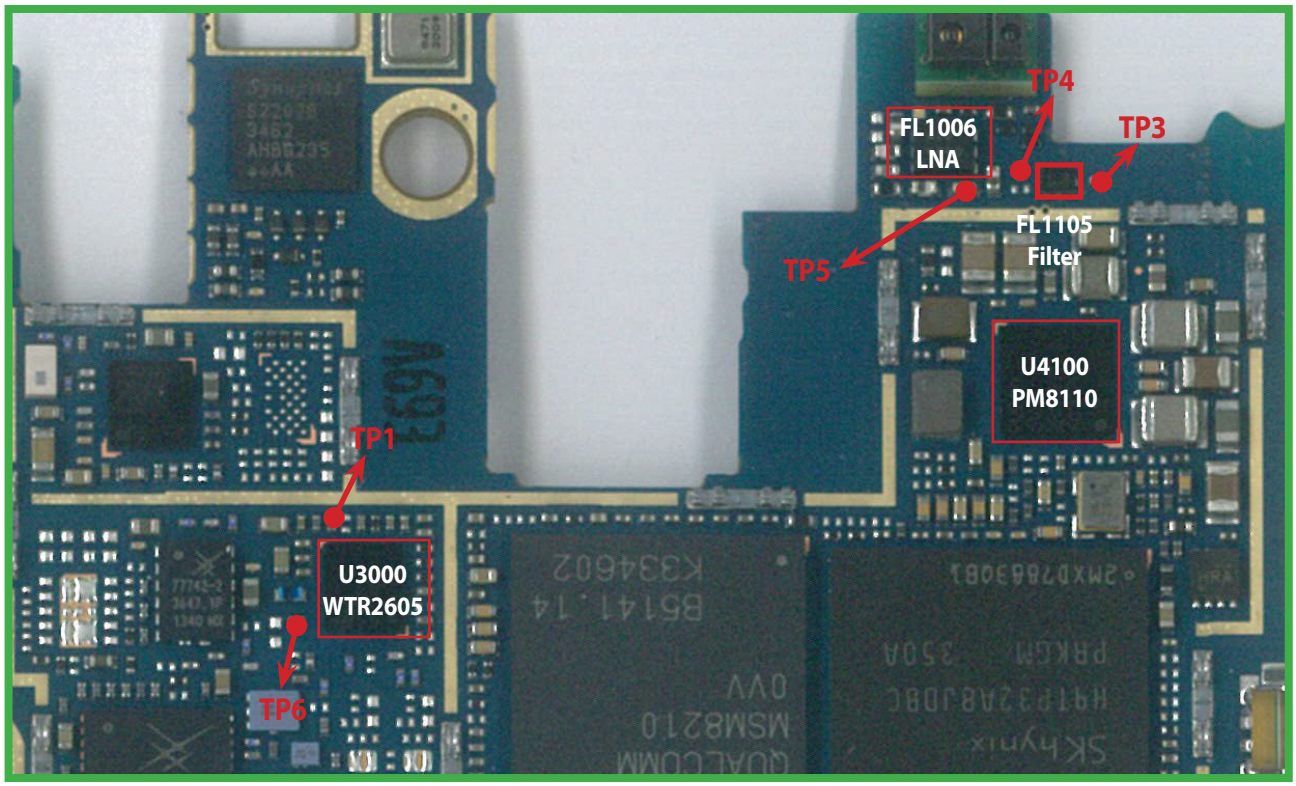

<Main Top>

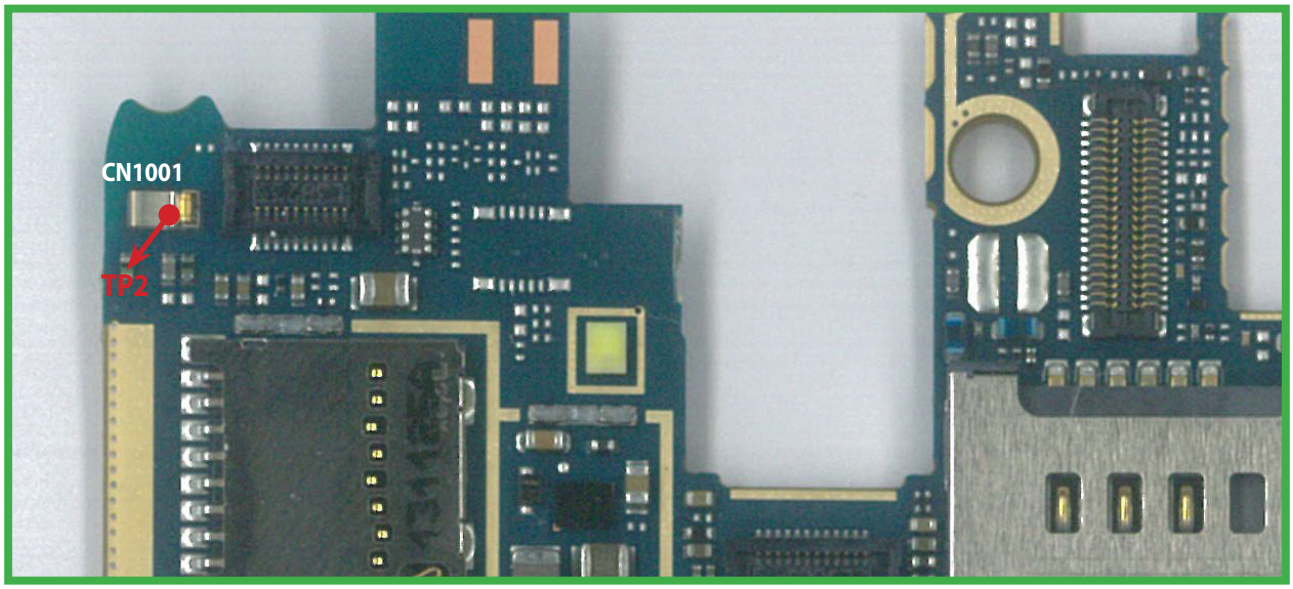

<Main Bot>

Copyright © 2014 LG Electronics. Inc. All right reserved.
Only for training and service purposes

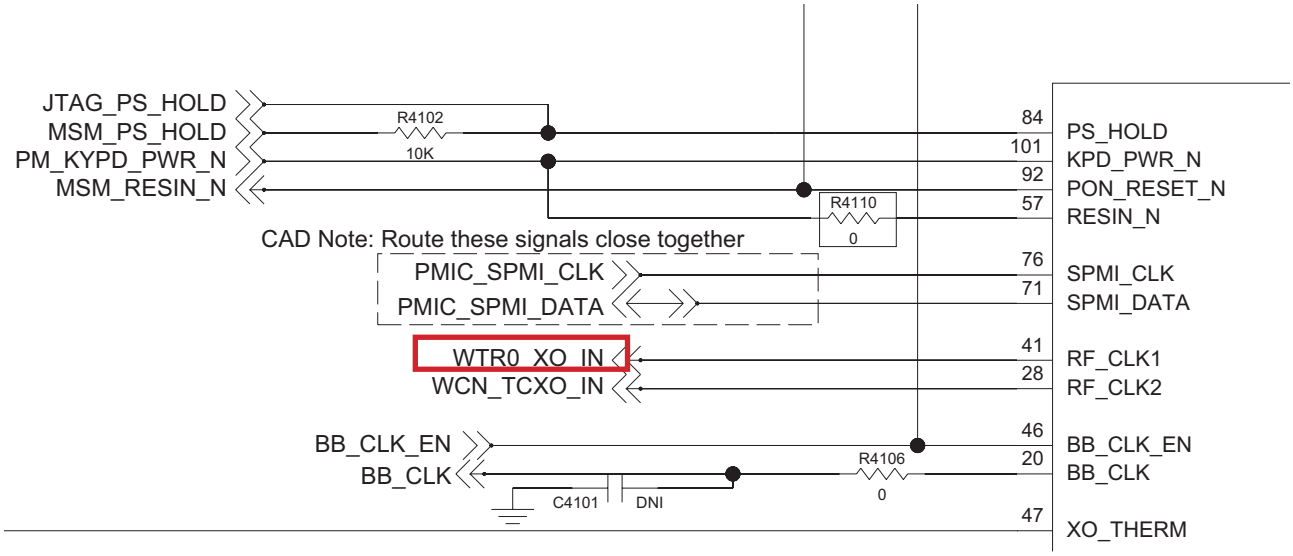

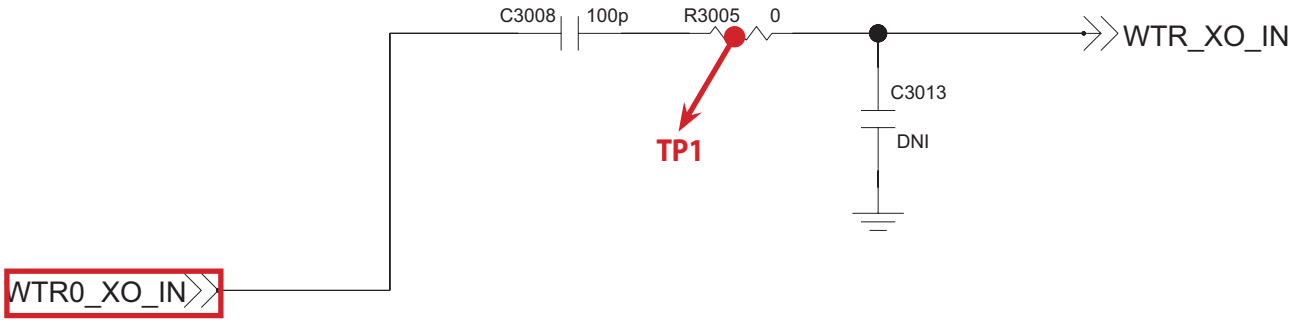

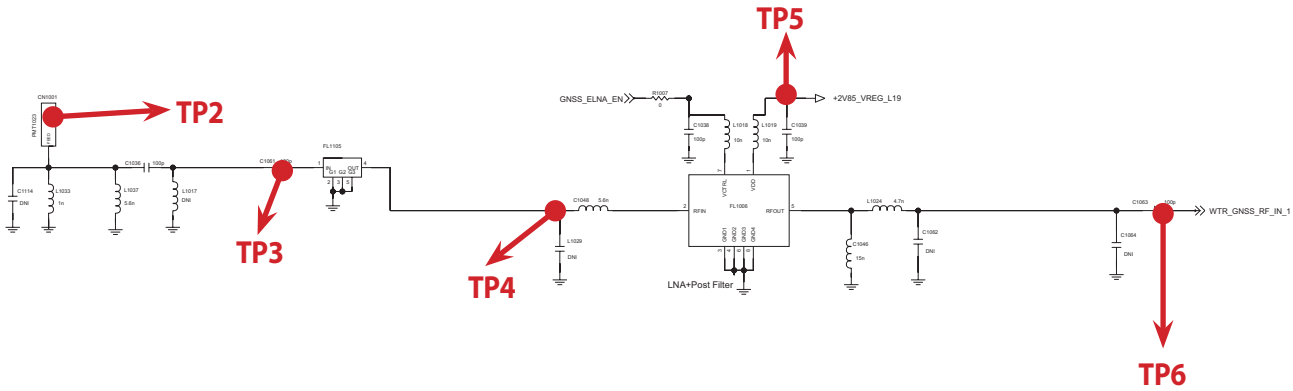

Copyright © 2014 LG Electronics. Inc. All right reserved.
Only for training and service purposes

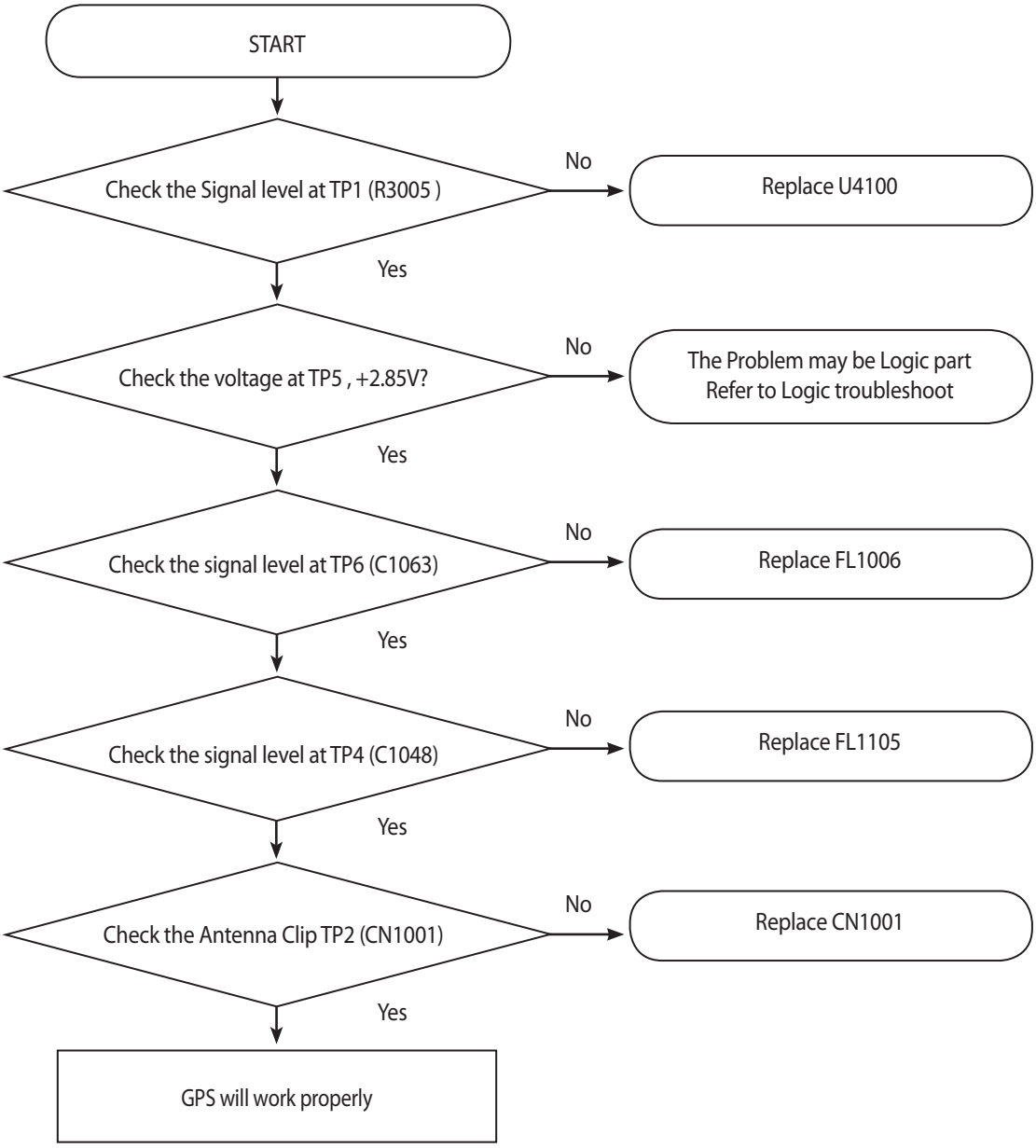

Copyright © 2014 LG Electronics. Inc. All right reserved.
Only for training and service purposes

3.17 FM TS

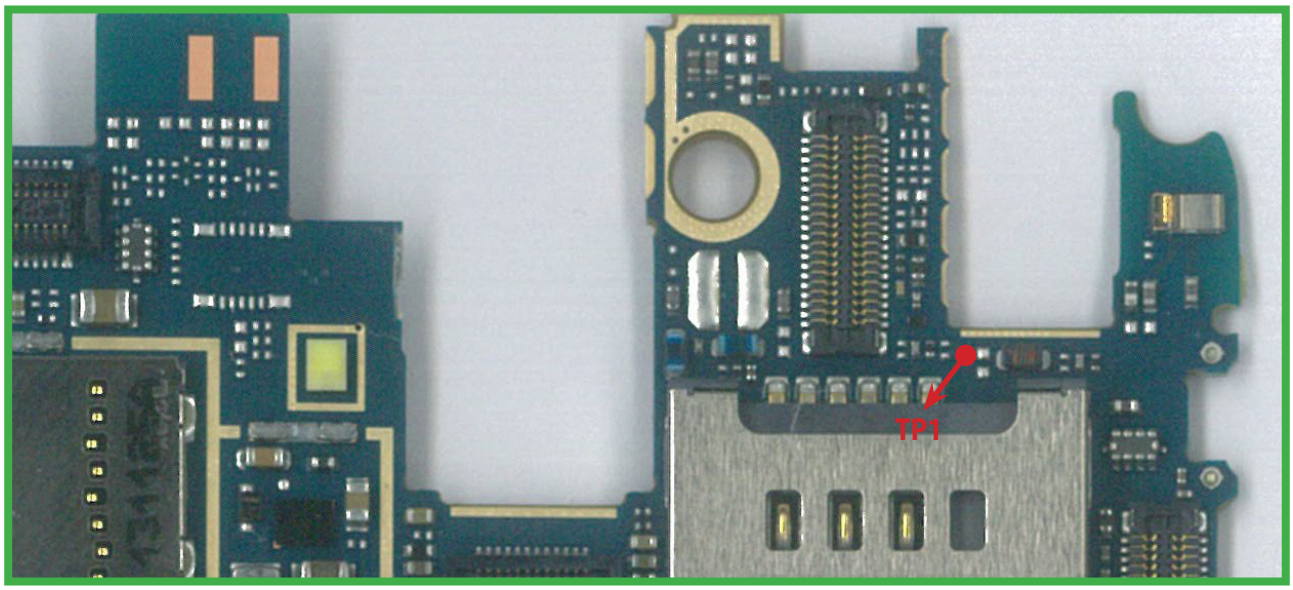

<Main Bot>

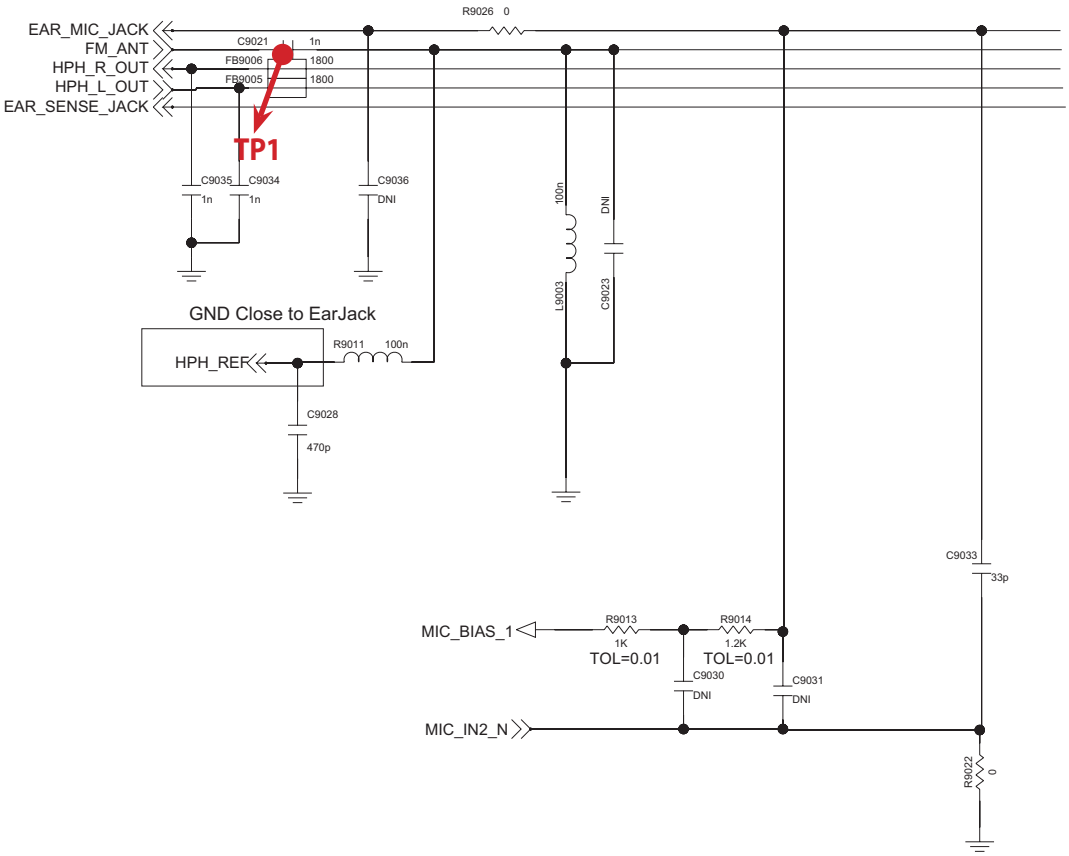

Copyright © 2014 LG Electronics. Inc. All right reserved.
Only for training and service purposes

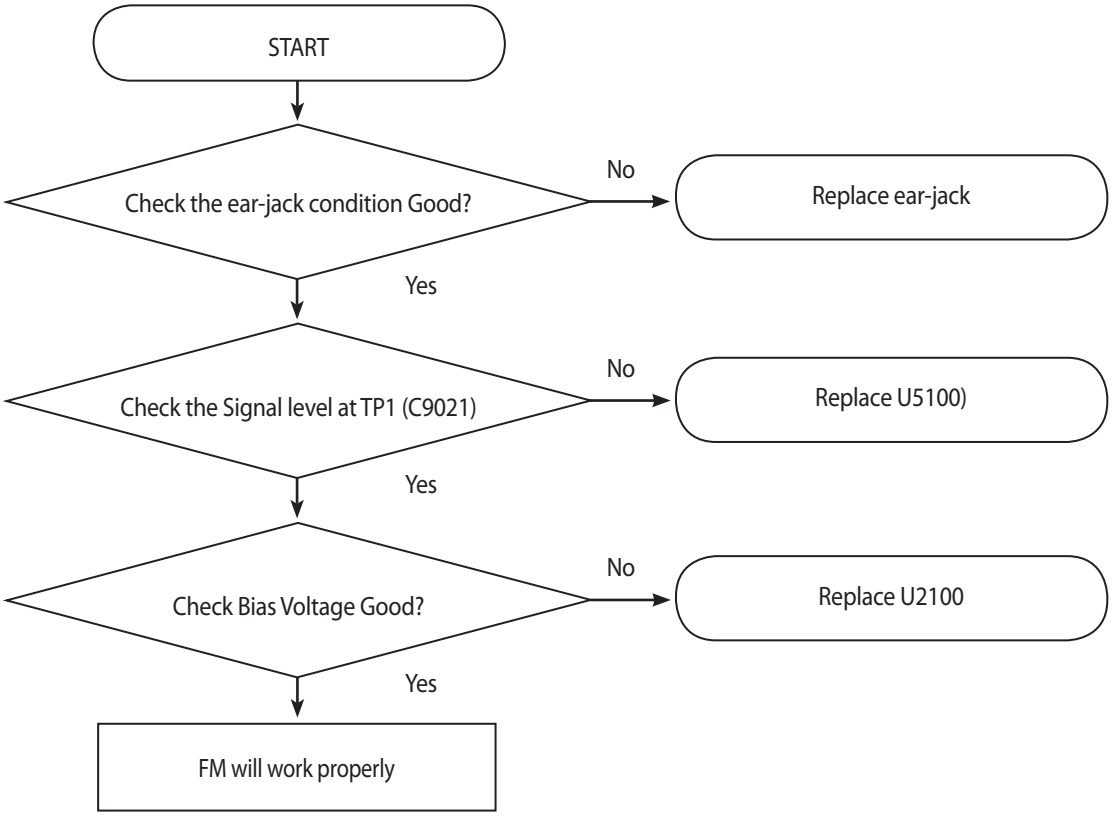

Copyright © 2014 LG Electronics. Inc. All right reserved.
Only for training and service purposes

4. DOWNLOAD

TOOL INFORMATION			
TOOL VERSION	DLL NAME	USB DRIVER	
LGFLASHv160	LGD325_20140311_LGFLASHv160_Download	LGUnitedMobileDriver_S4981MAN38AP22_ML_WHQL_Ver_3.8.1	
Please Check the Version to "B2B"			
H/W			
	Name	Part No.	SW
D/L Cable	Micro 5P (56-open-910K) USB DLC	RAD32167835	TOT

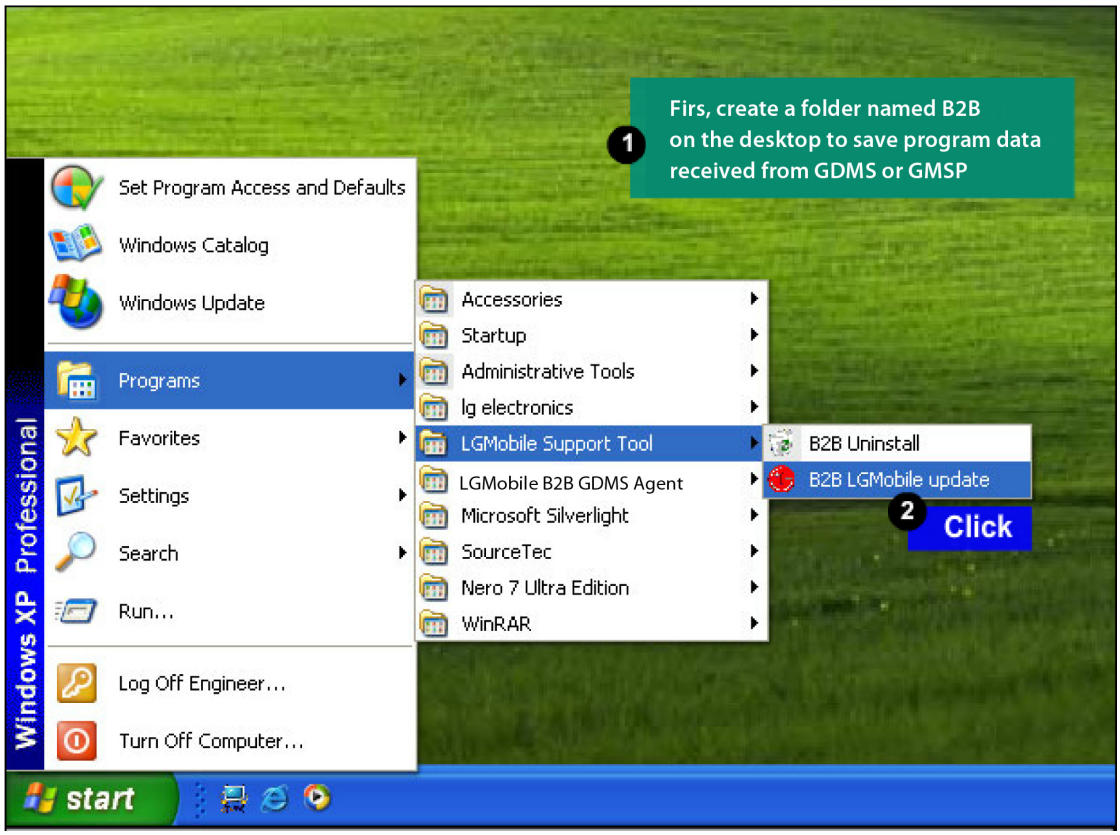

Copyright © 2014 LG Electronics. Inc. All right reserved.
Only for training and service purposes

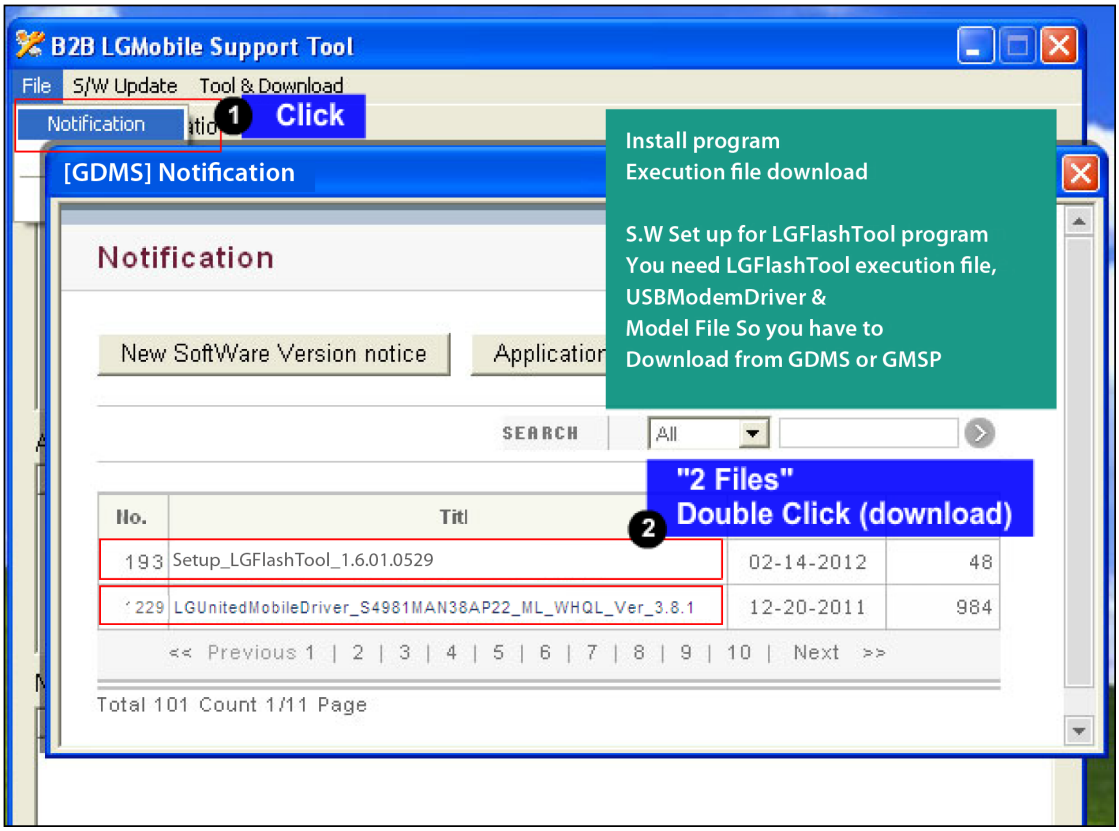

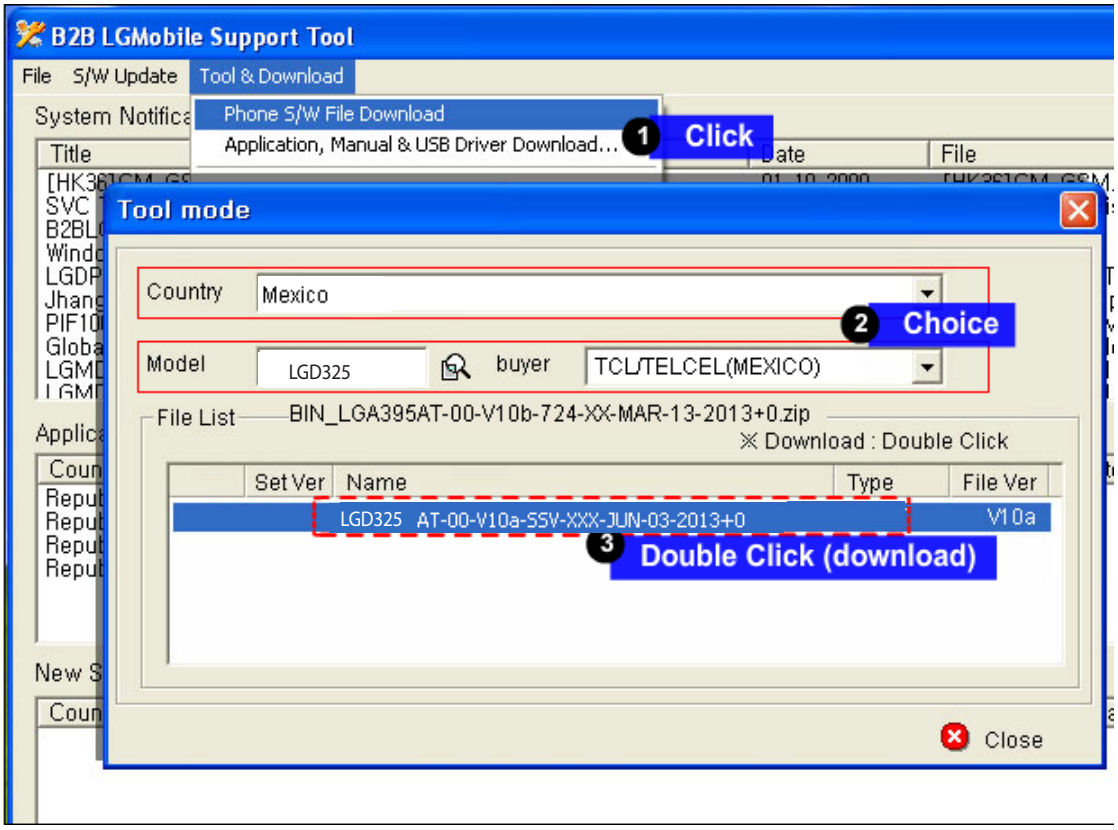

Copyright © 2014 LG Electronics. Inc. All right reserved.
Only for training and service purposes

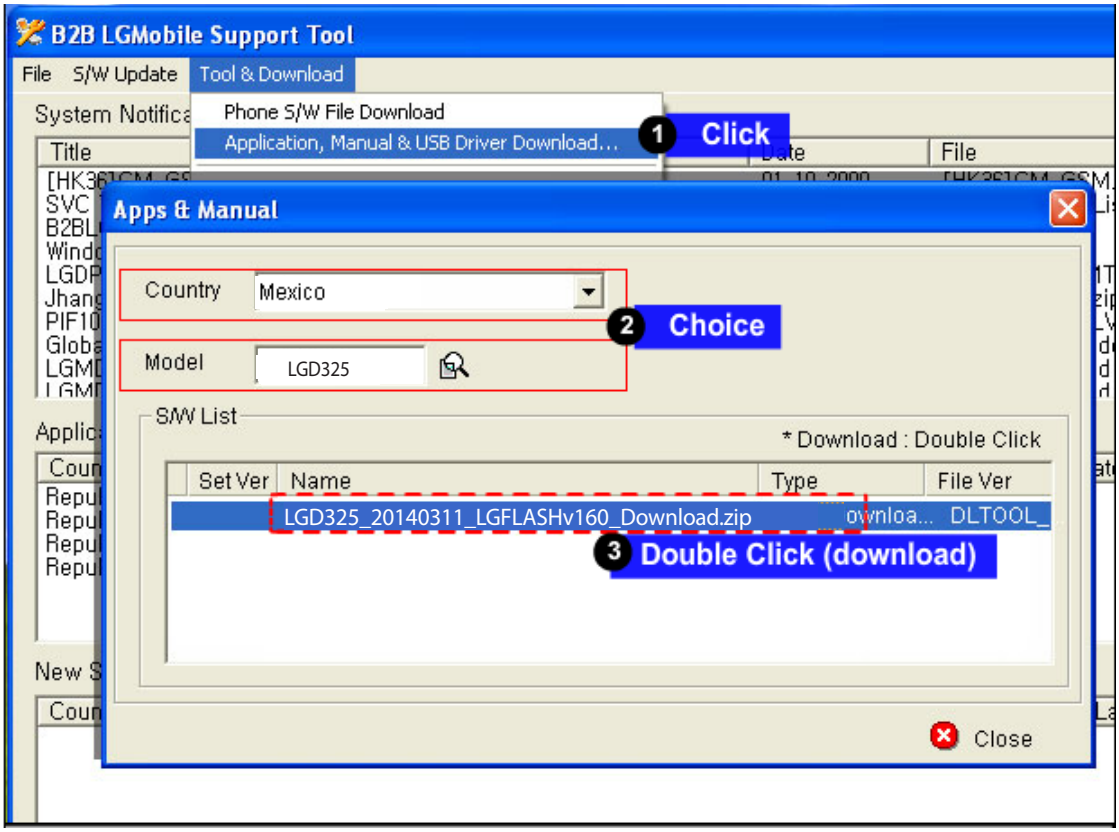

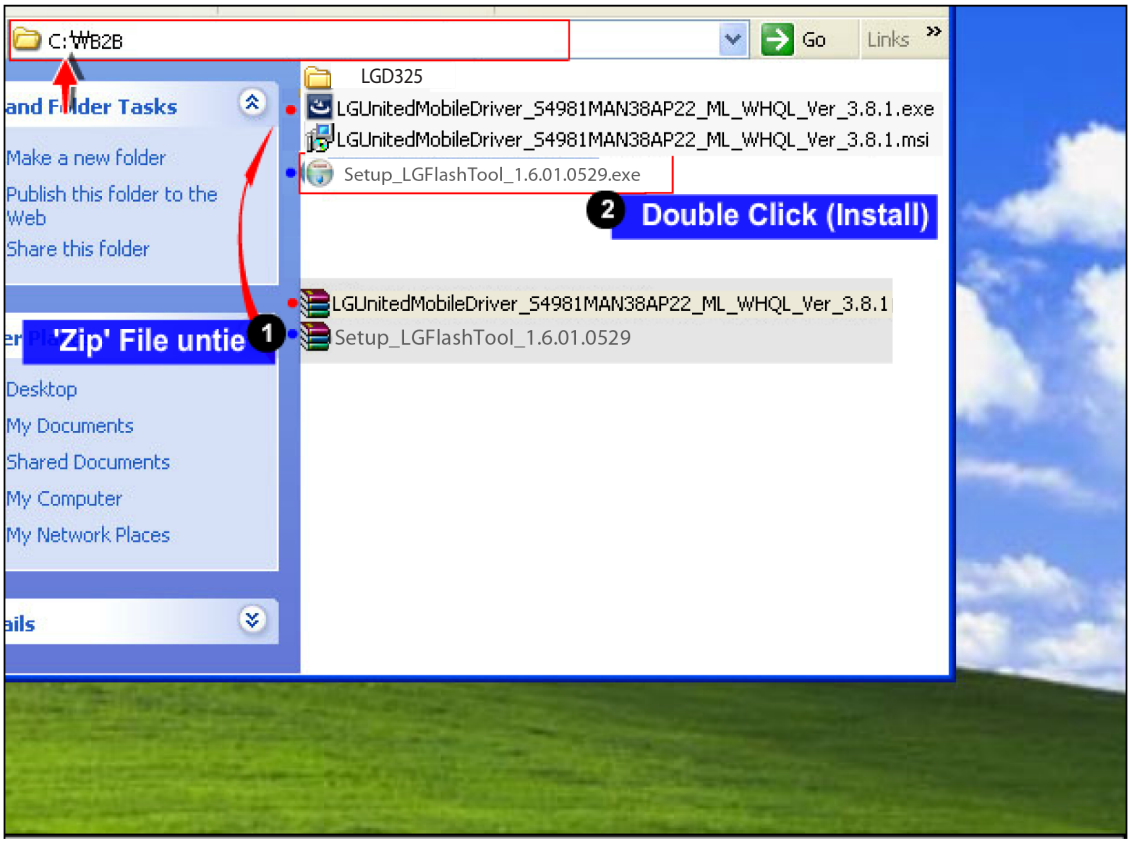

Copyright © 2014 LG Electronics. Inc. All right reserved.
Only for training and service purposes

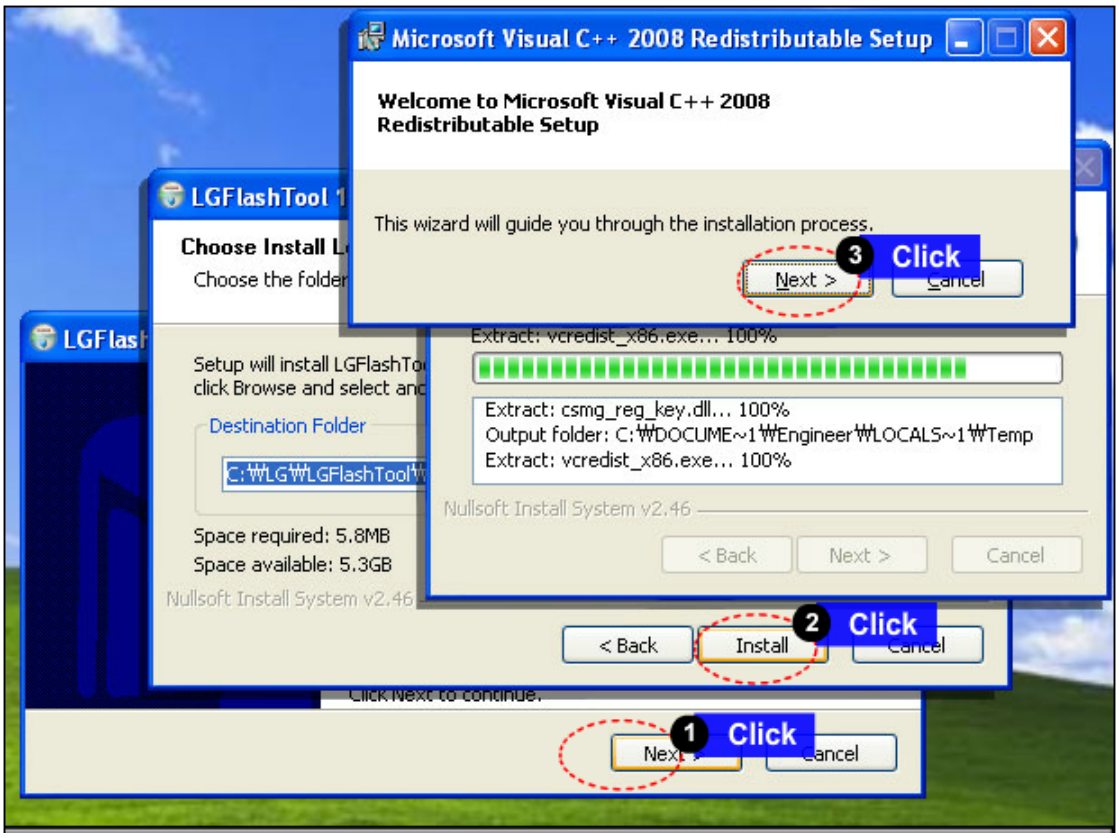

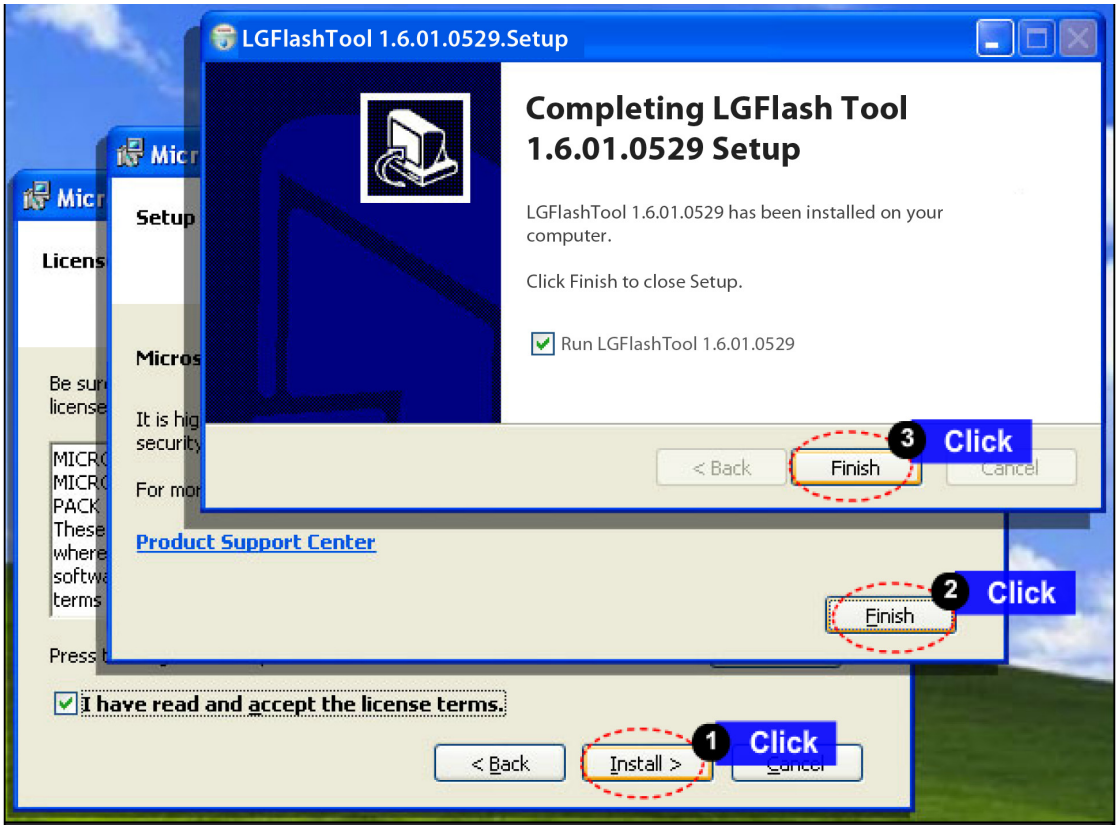

Copyright © 2014 LG Electronics. Inc. All right reserved.
Only for training and service purposes

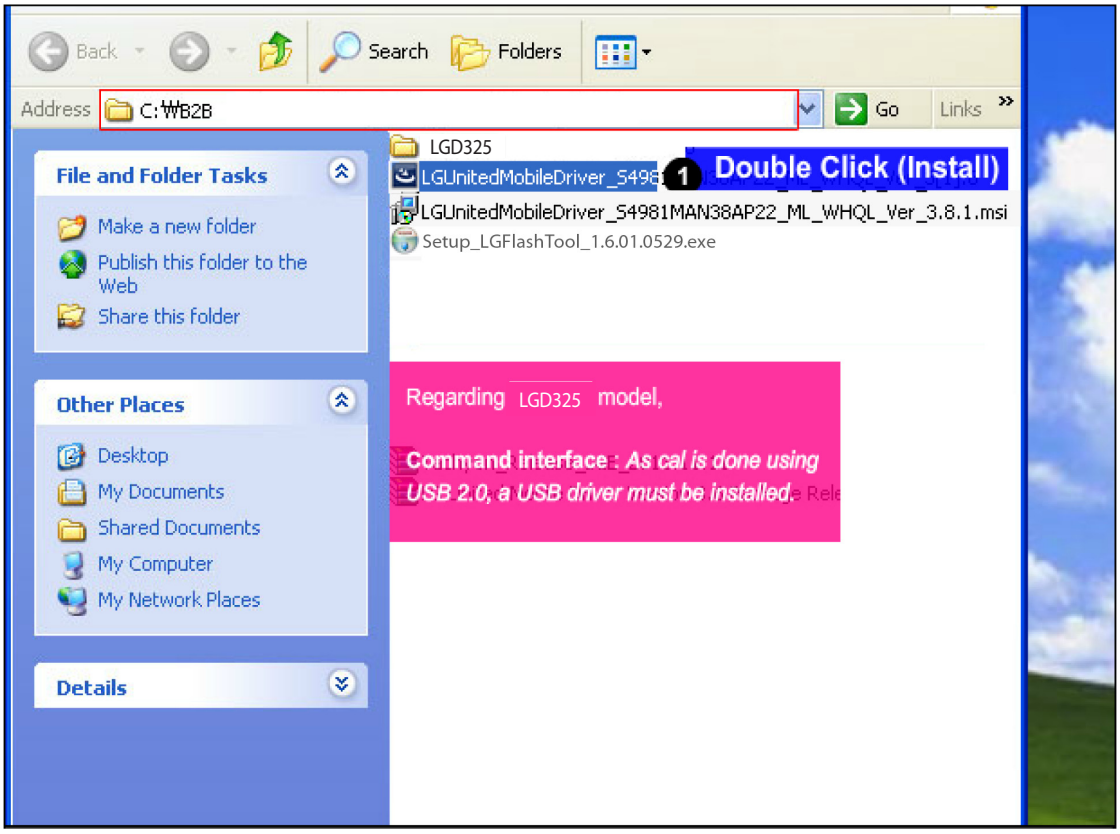

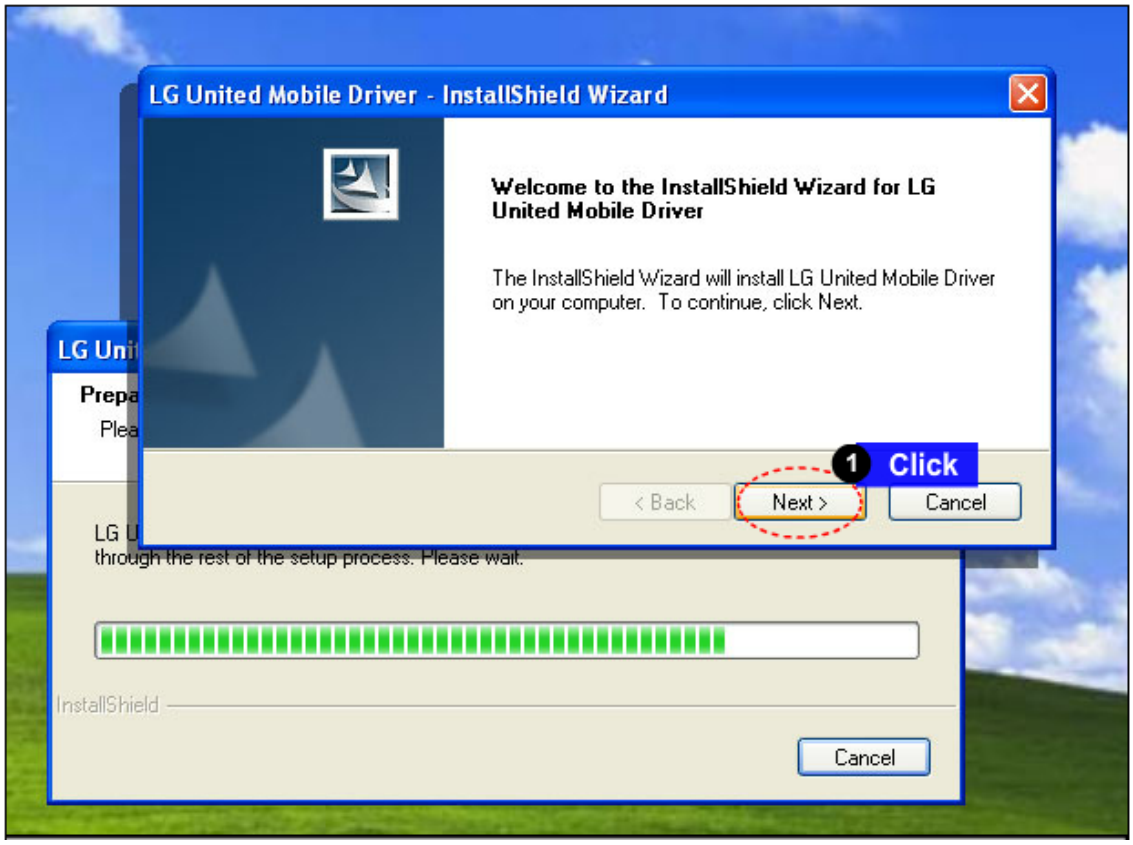

Copyright © 2014 LG Electronics. Inc. All right reserved.
Only for training and service purposes

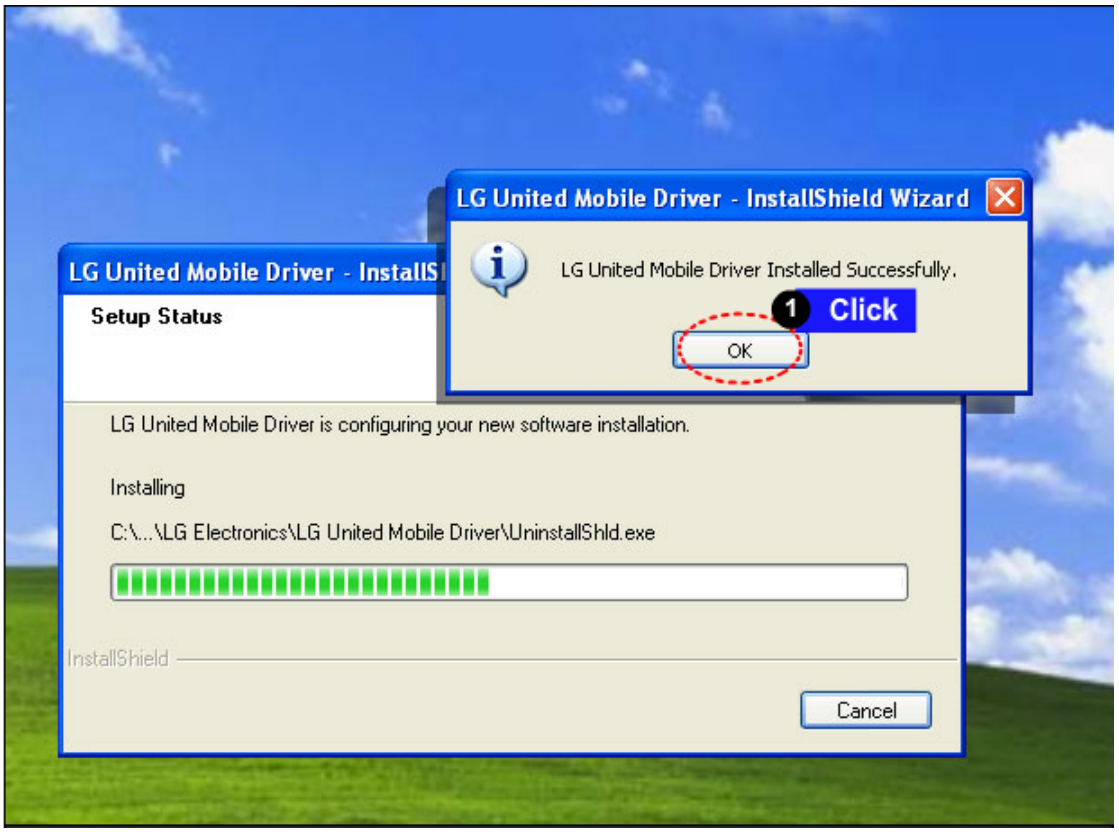

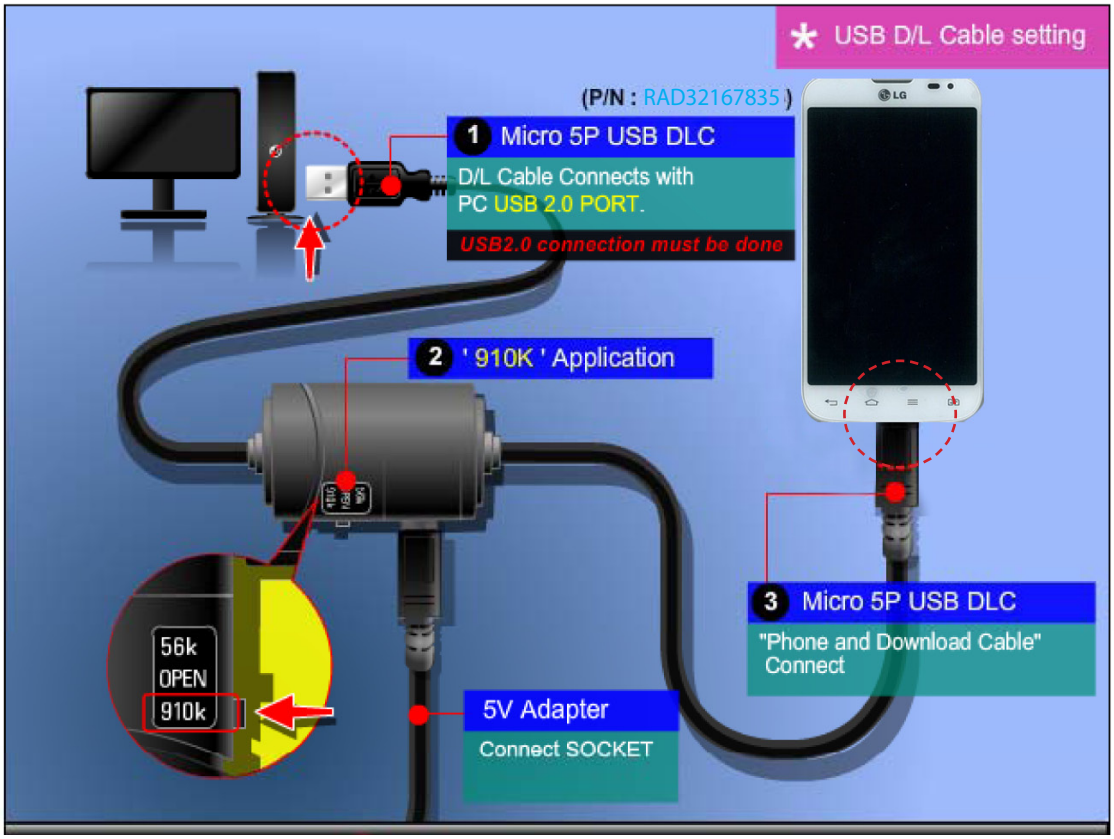

Copyright © 2014 LG Electronics. Inc. All right reserved.
Only for training and service purposes

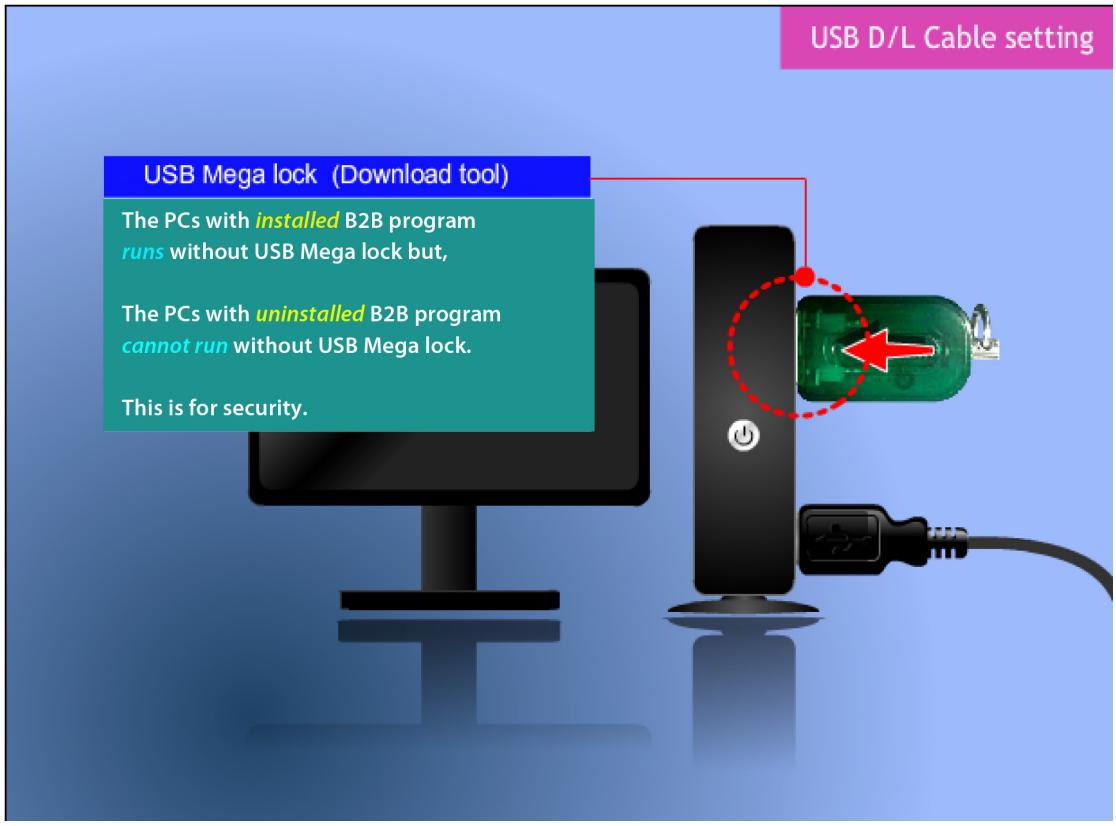

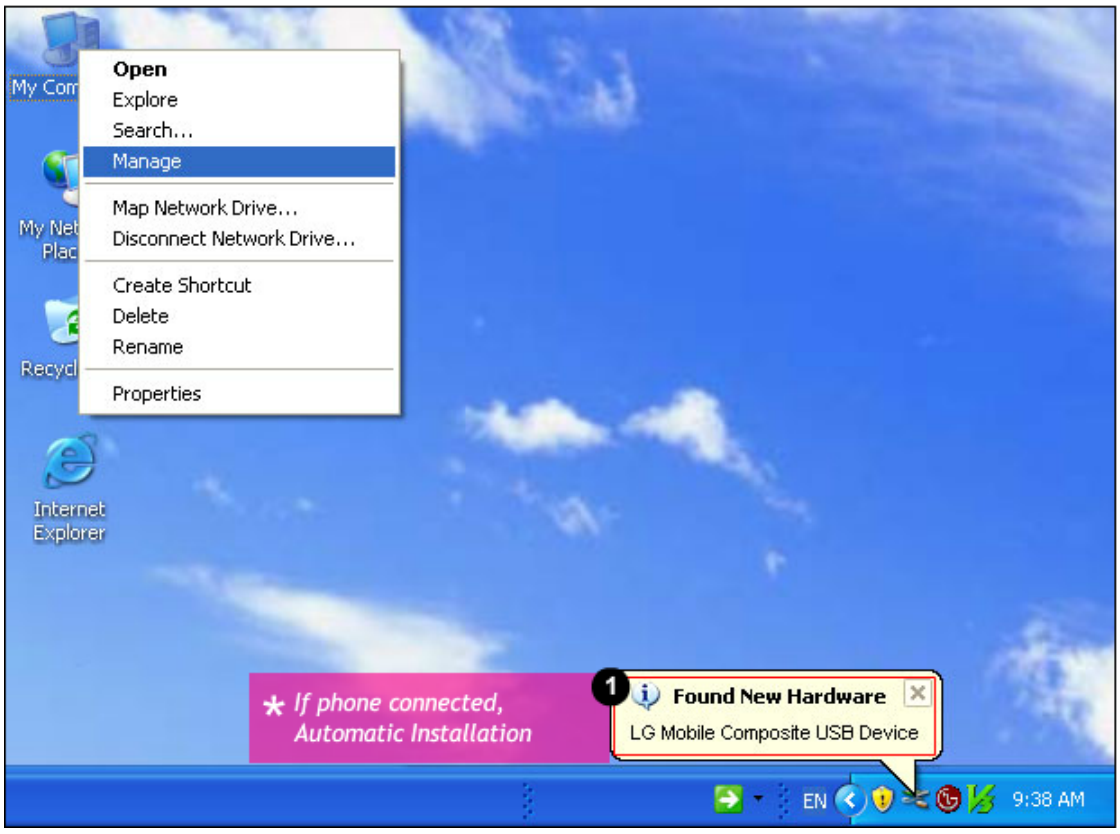

Copyright © 2014 LG Electronics. Inc. All right reserved.
Only for training and service purposes

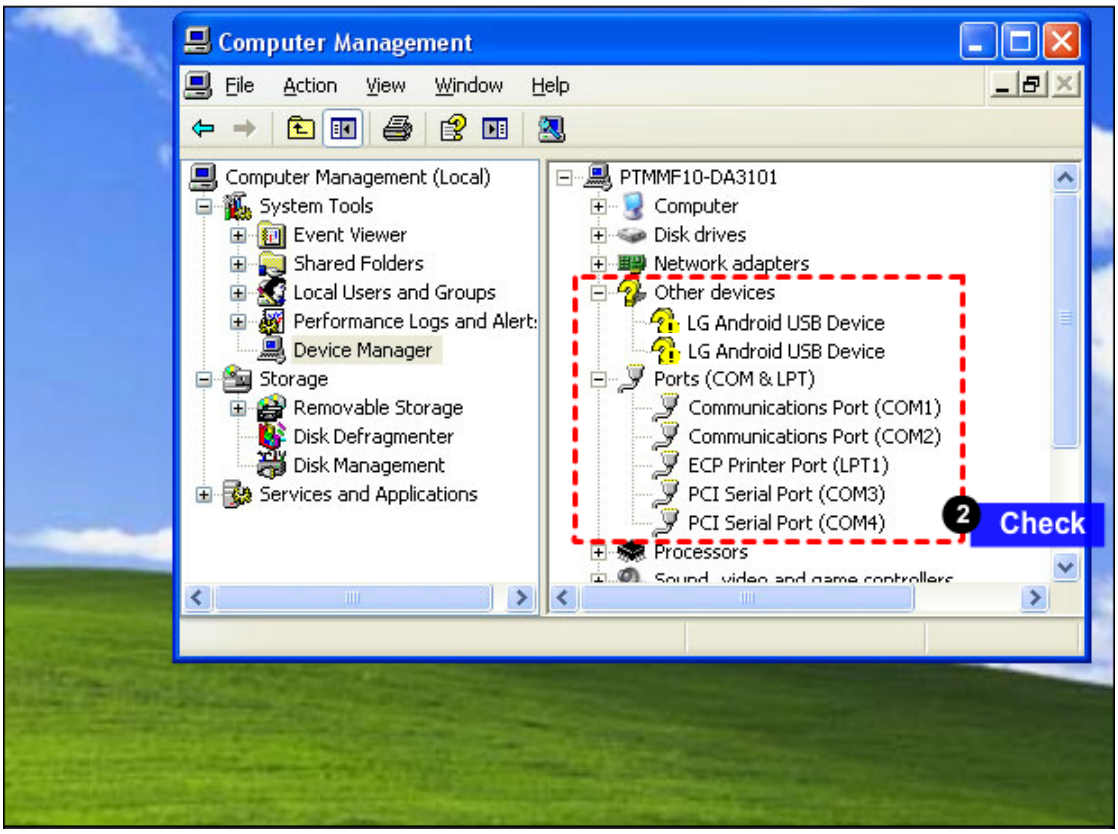

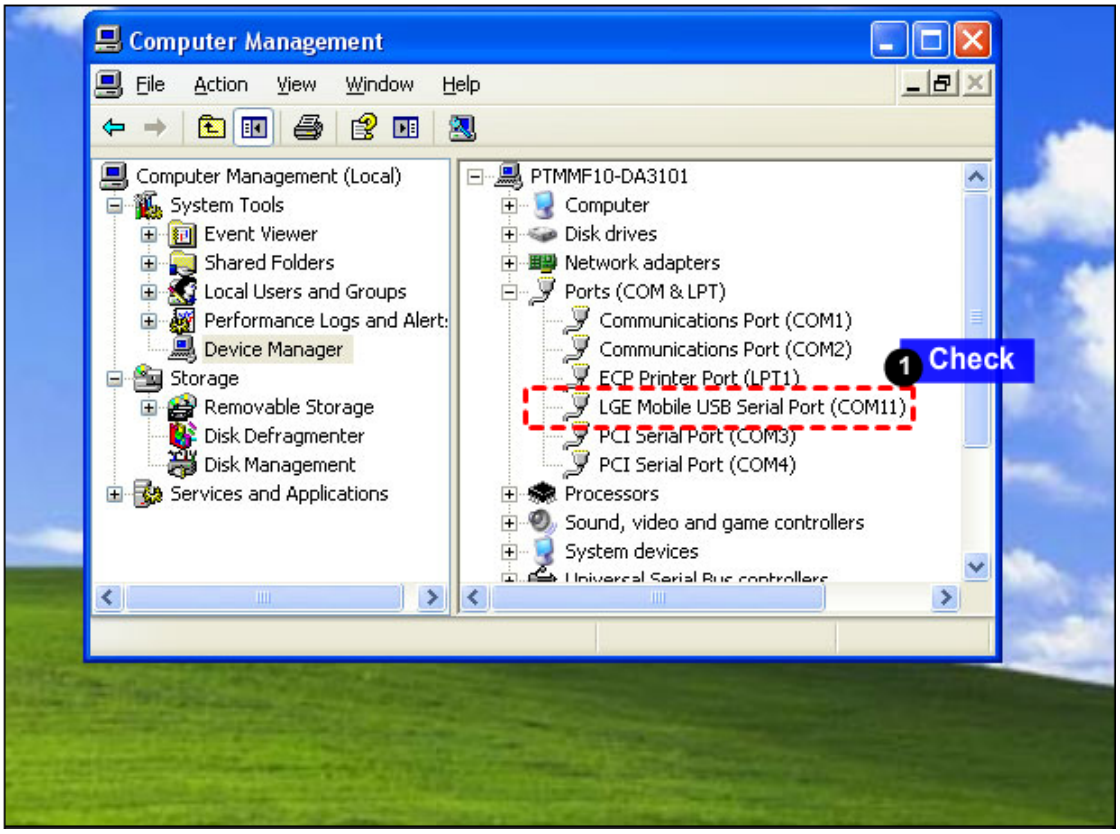

Copyright © 2014 LG Electronics. Inc. All right reserved.
Only for training and service purposes

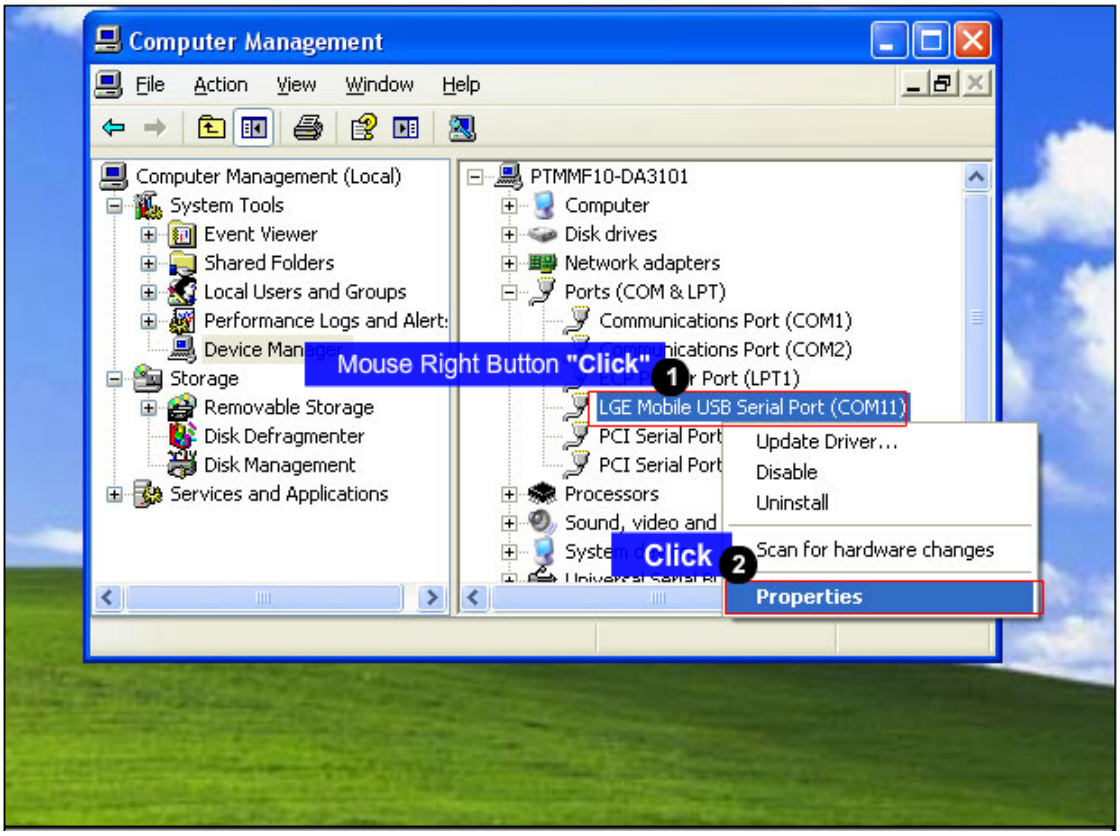

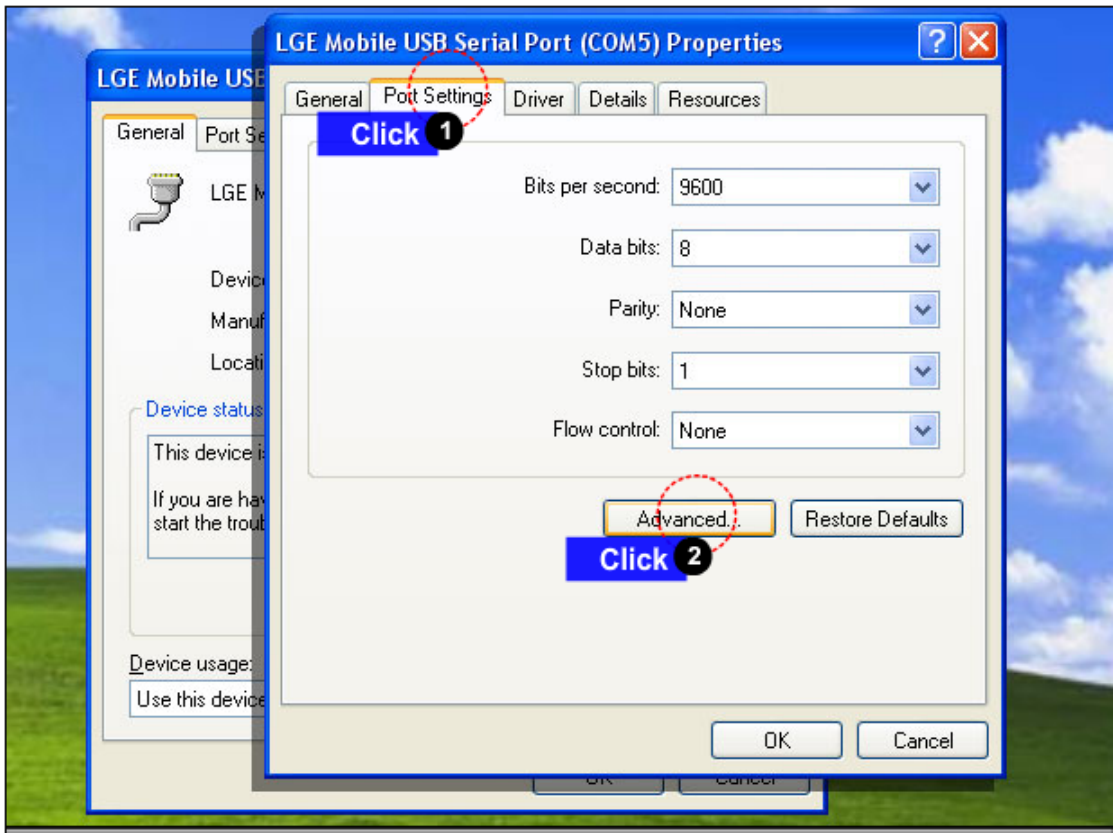

Copyright © 2014 LG Electronics. Inc. All right reserved.
Only for training and service purposes

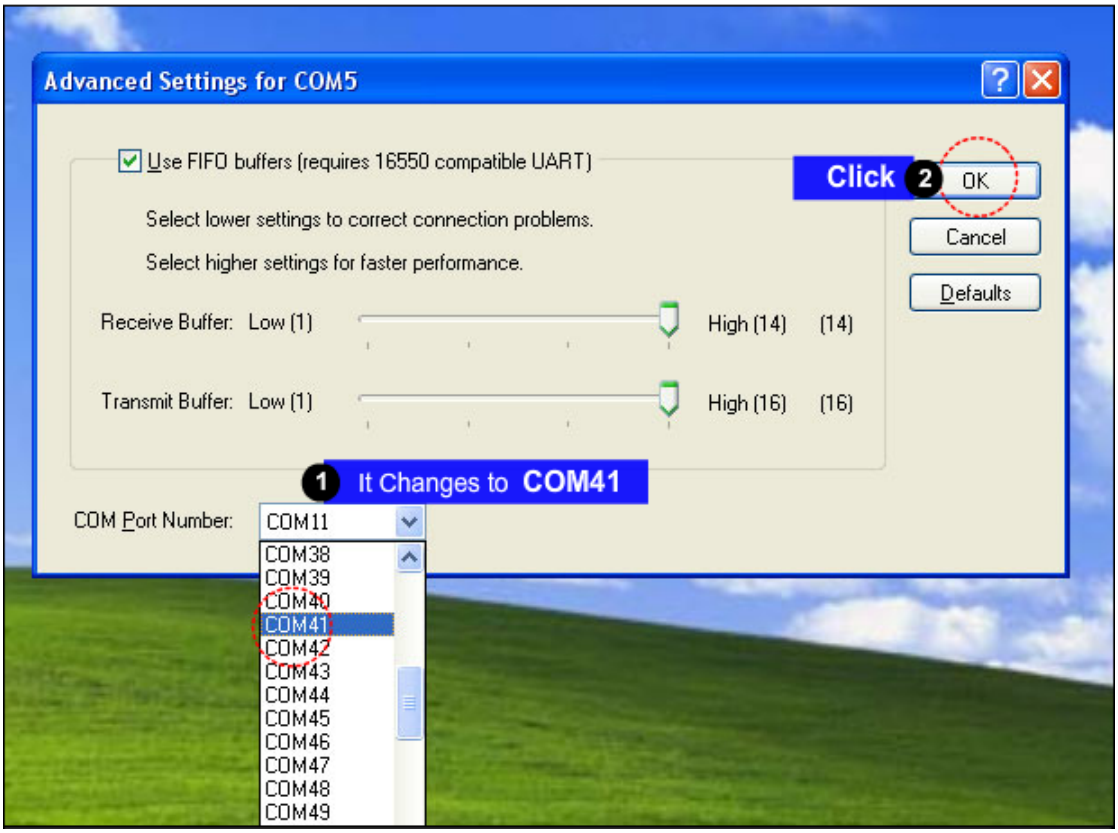

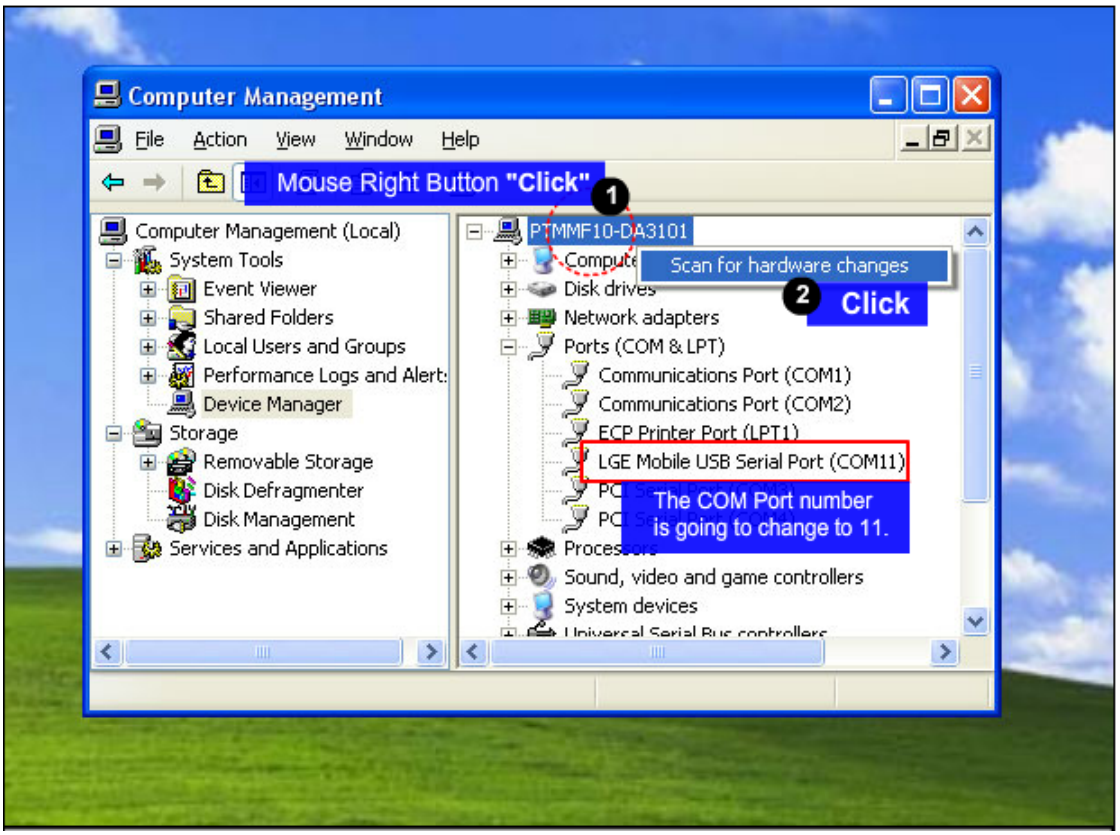

Copyright © 2014 LG Electronics. Inc. All right reserved.
Only for training and service purposes

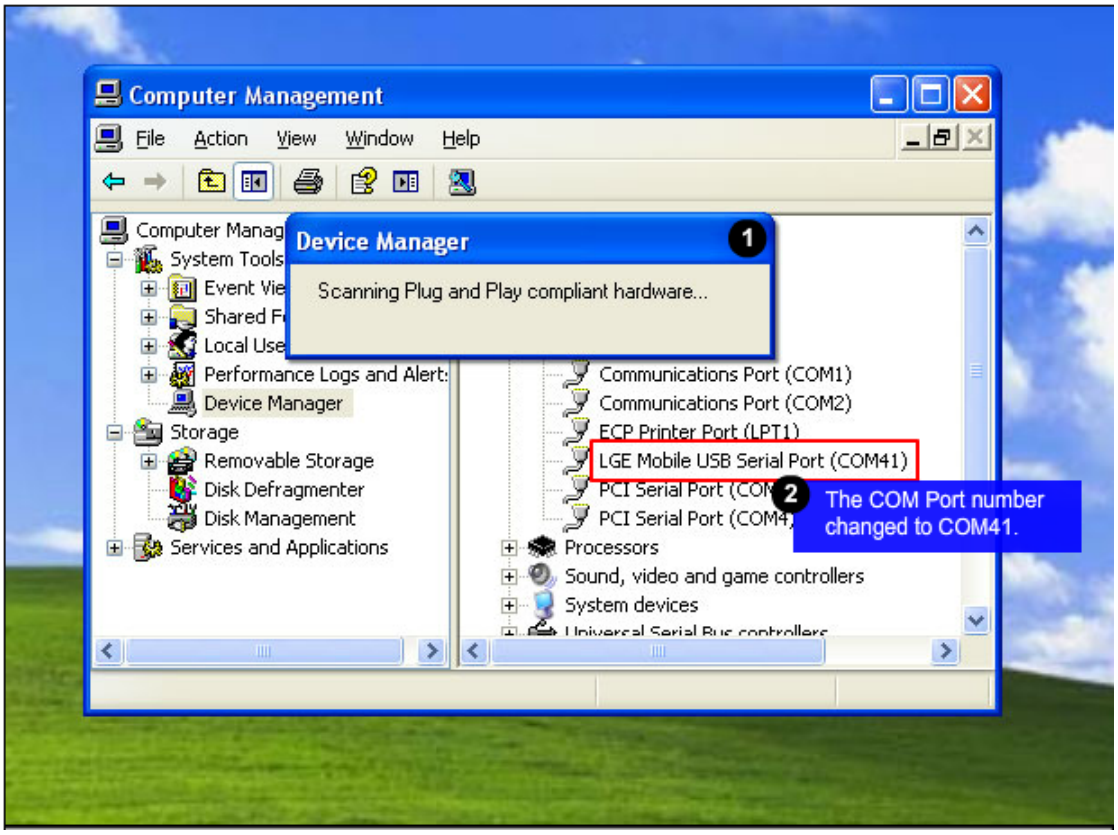

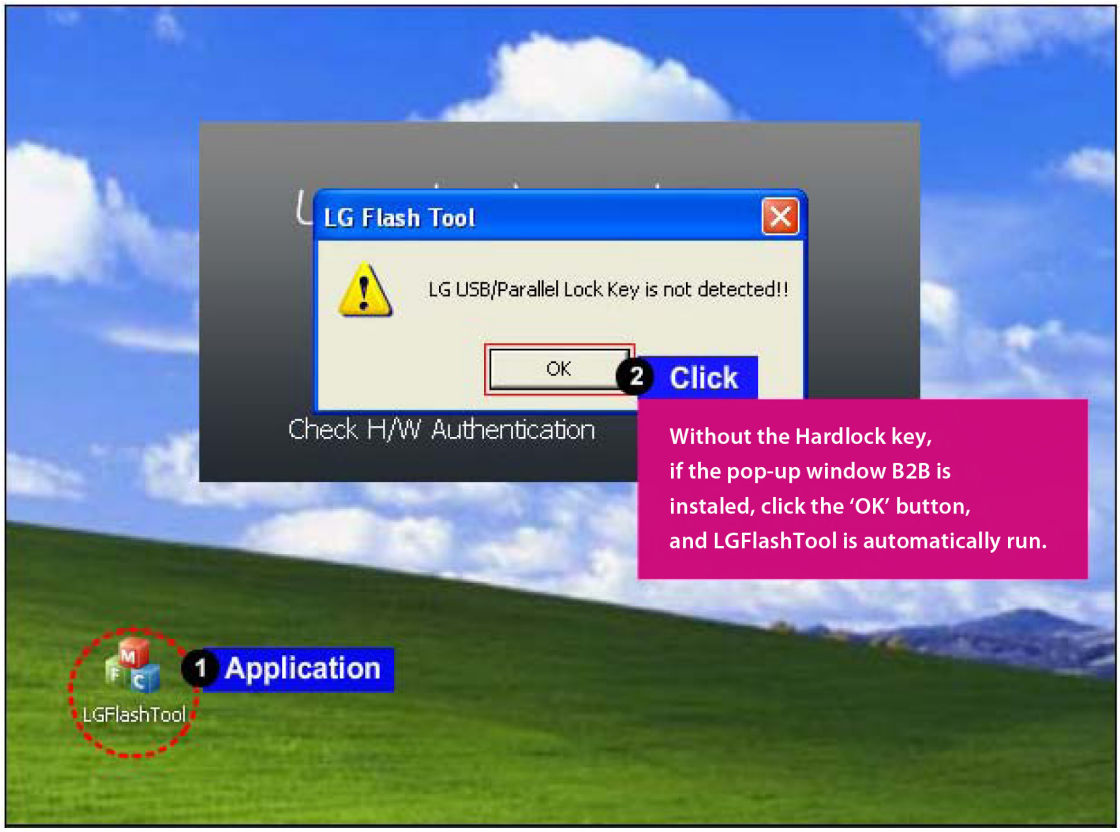

Copyright © 2014 LG Electronics. Inc. All right reserved.
Only for training and service purposes

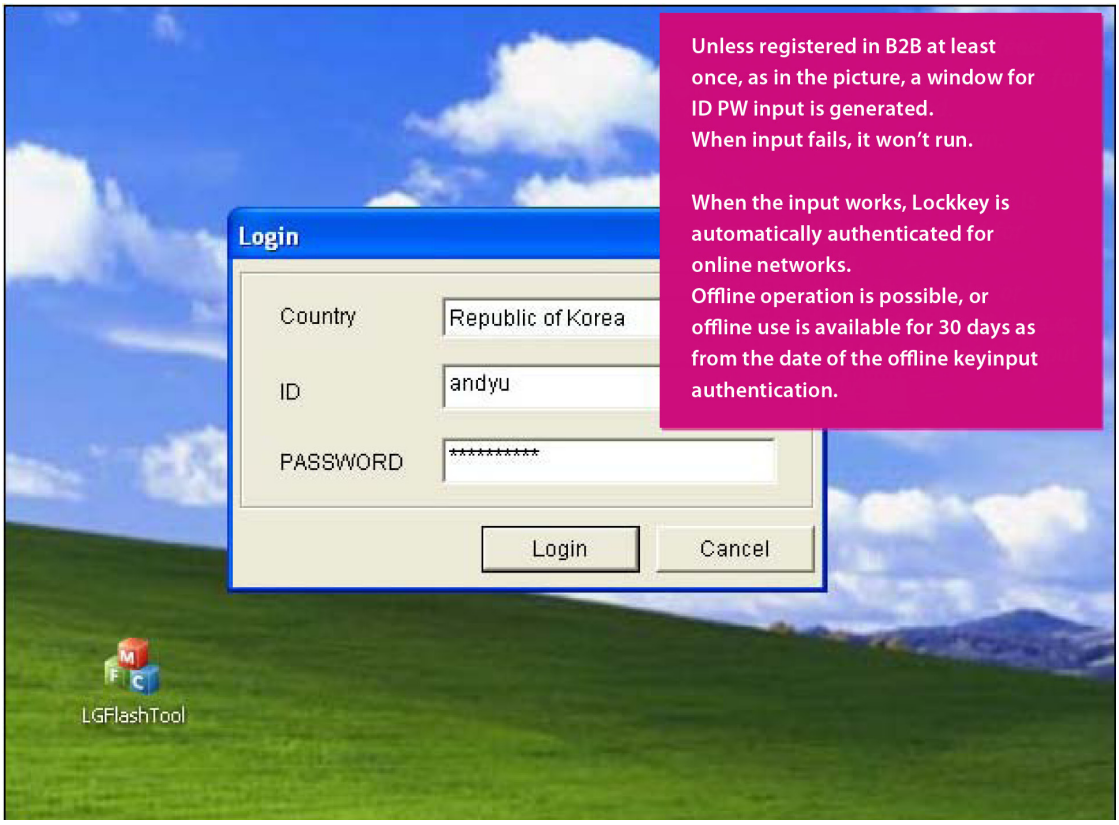

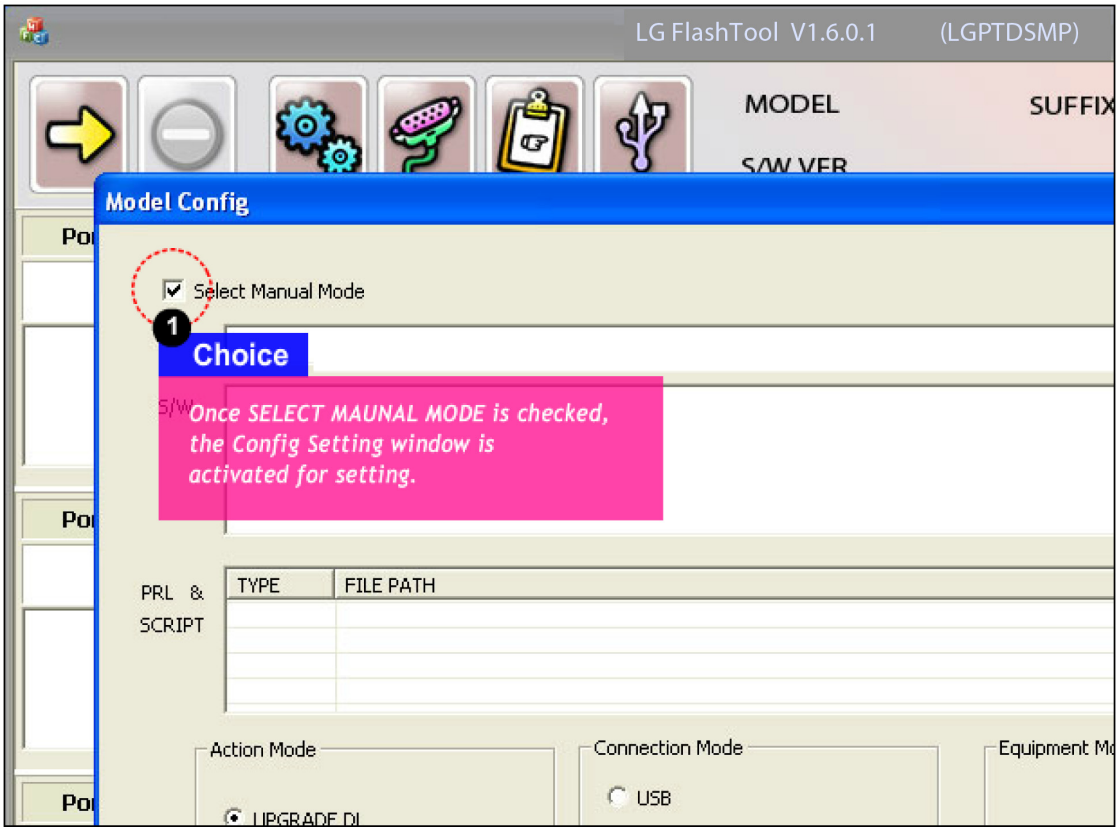

Copyright © 2014 LG Electronics. Inc. All right reserved.
Only for training and service purposes

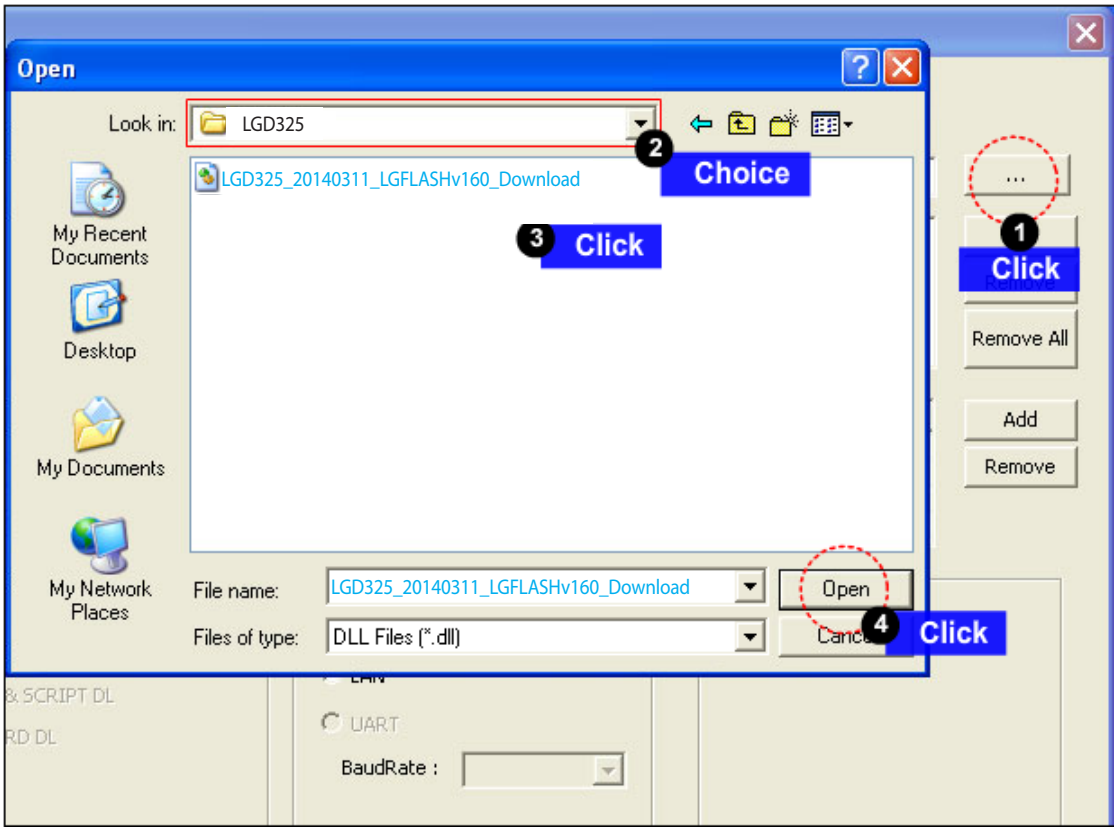

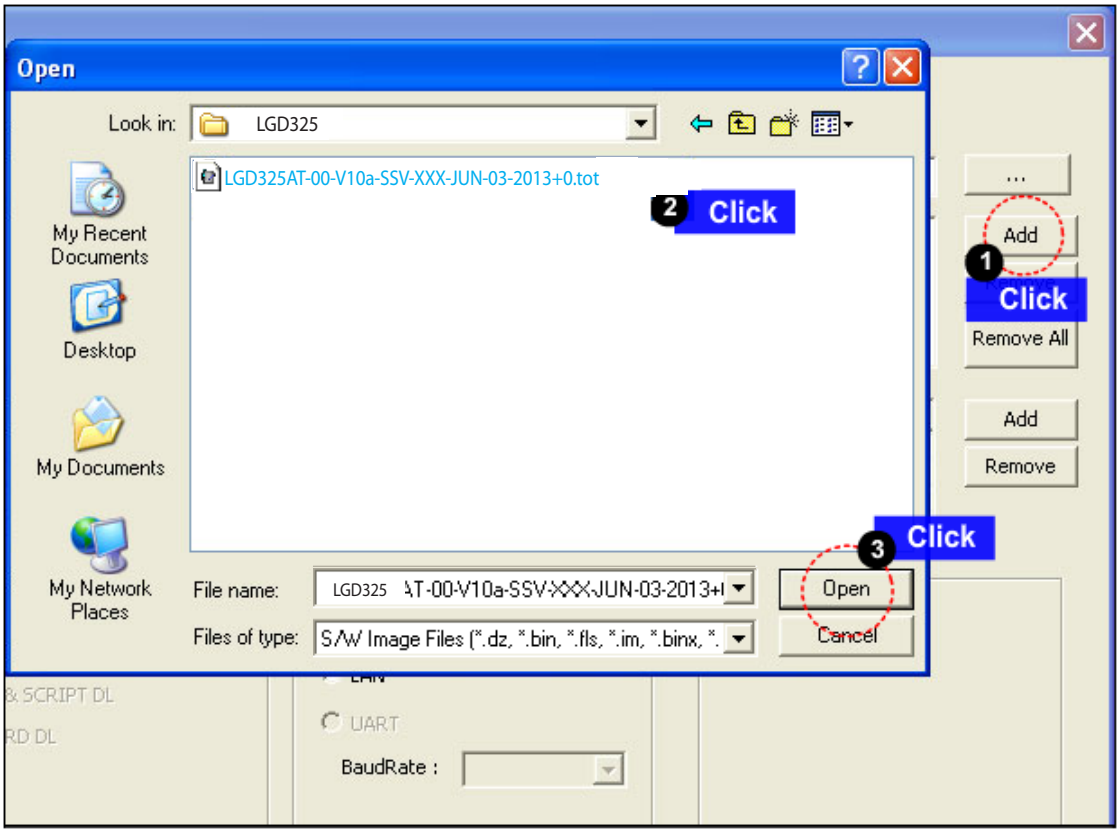

Copyright © 2014 LG Electronics. Inc. All right reserved.
Only for training and service purposes

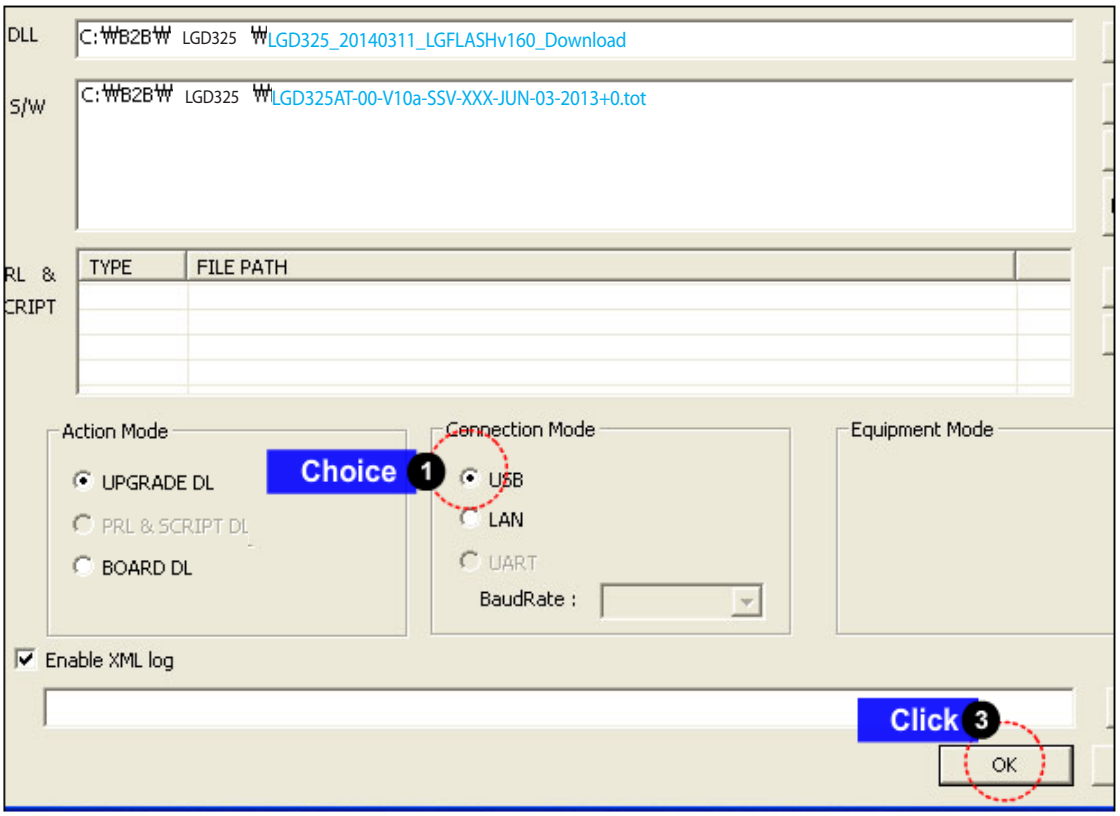

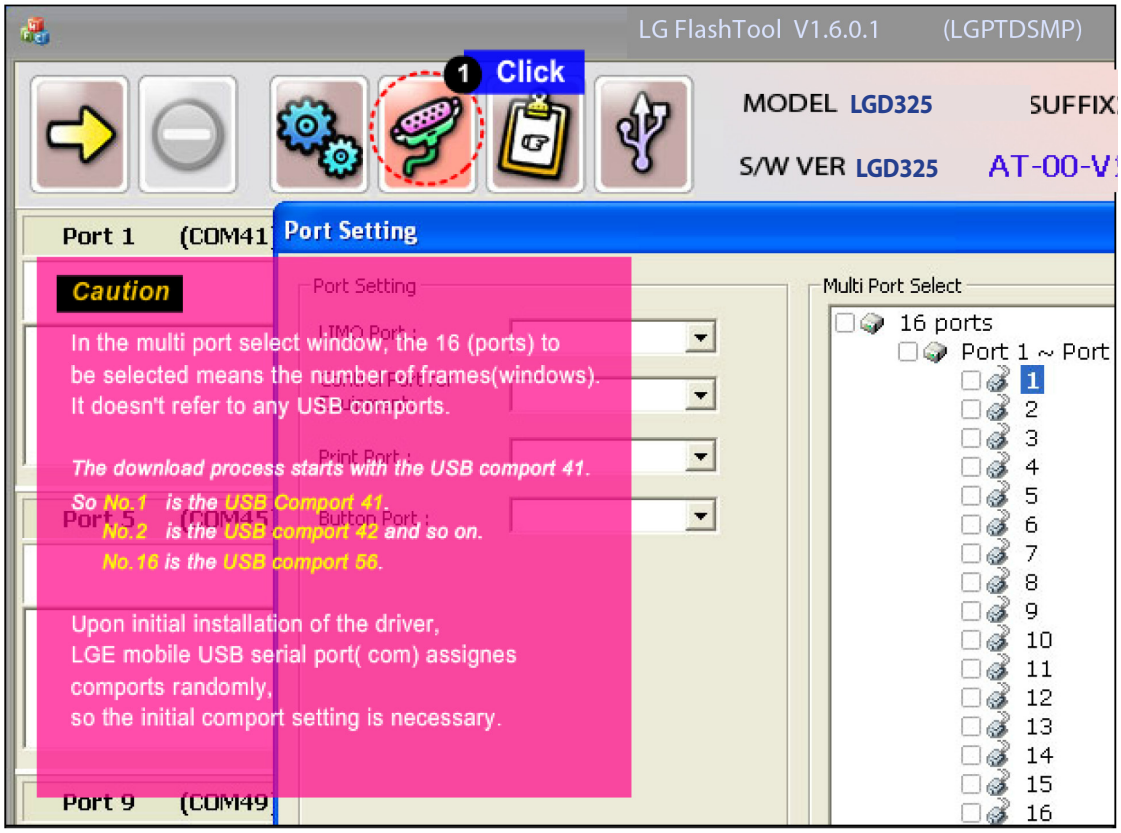

Copyright © 2014 LG Electronics. Inc. All right reserved.
Only for training and service purposes

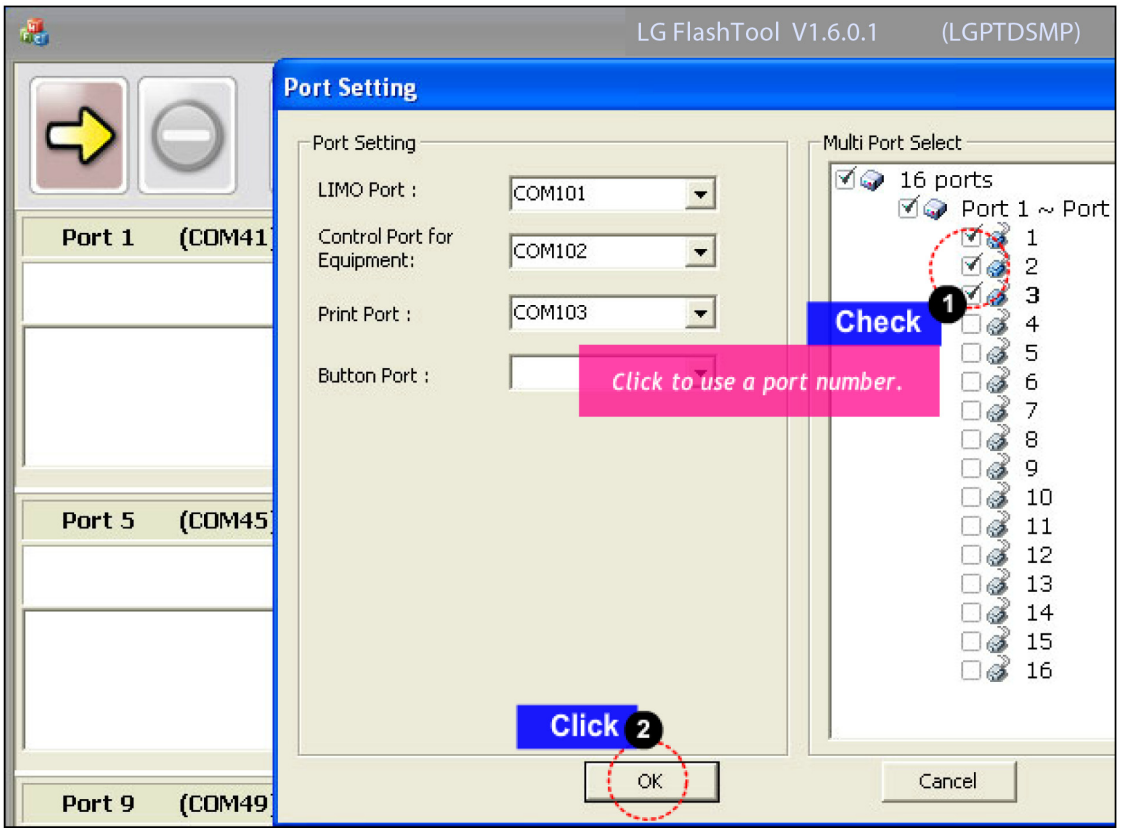

Copyright © 2014 LG Electronics. Inc. All right reserved.
Only for training and service purposes

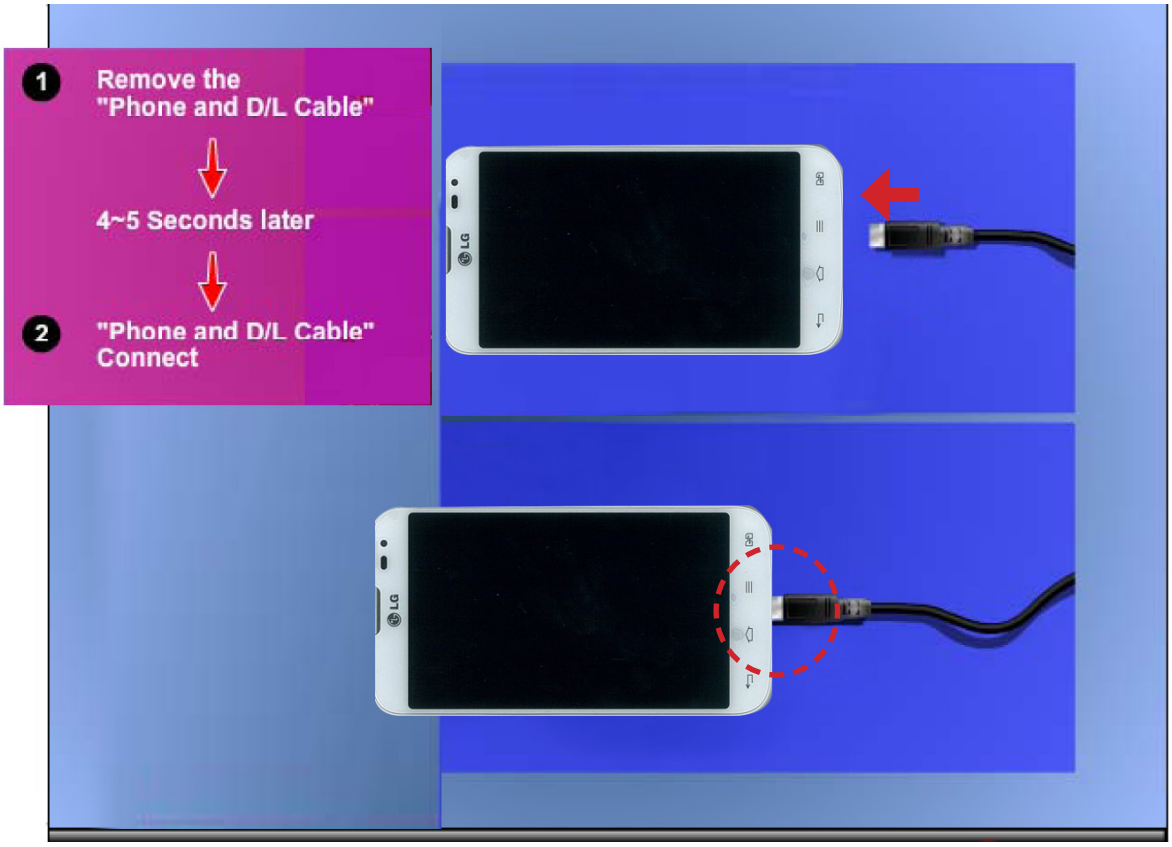

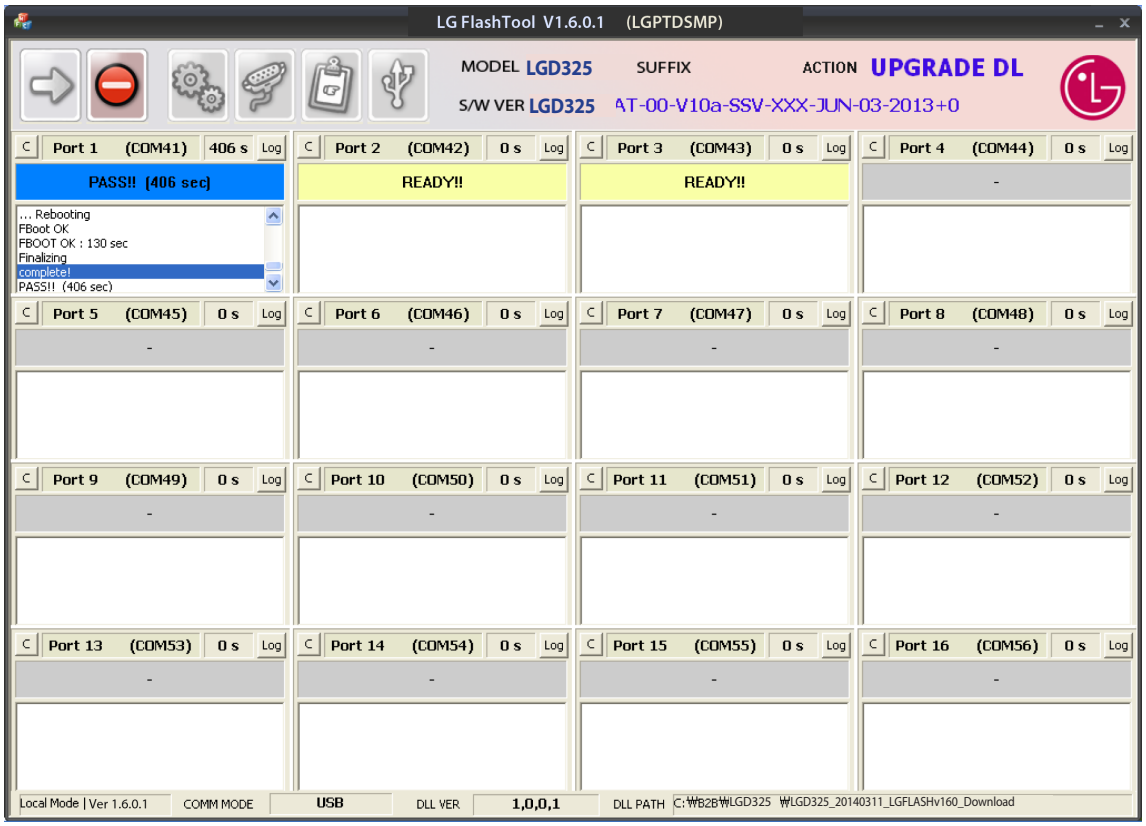

Copyright © 2014 LG Electronics. Inc. All right reserved.
Only for training and service purposes

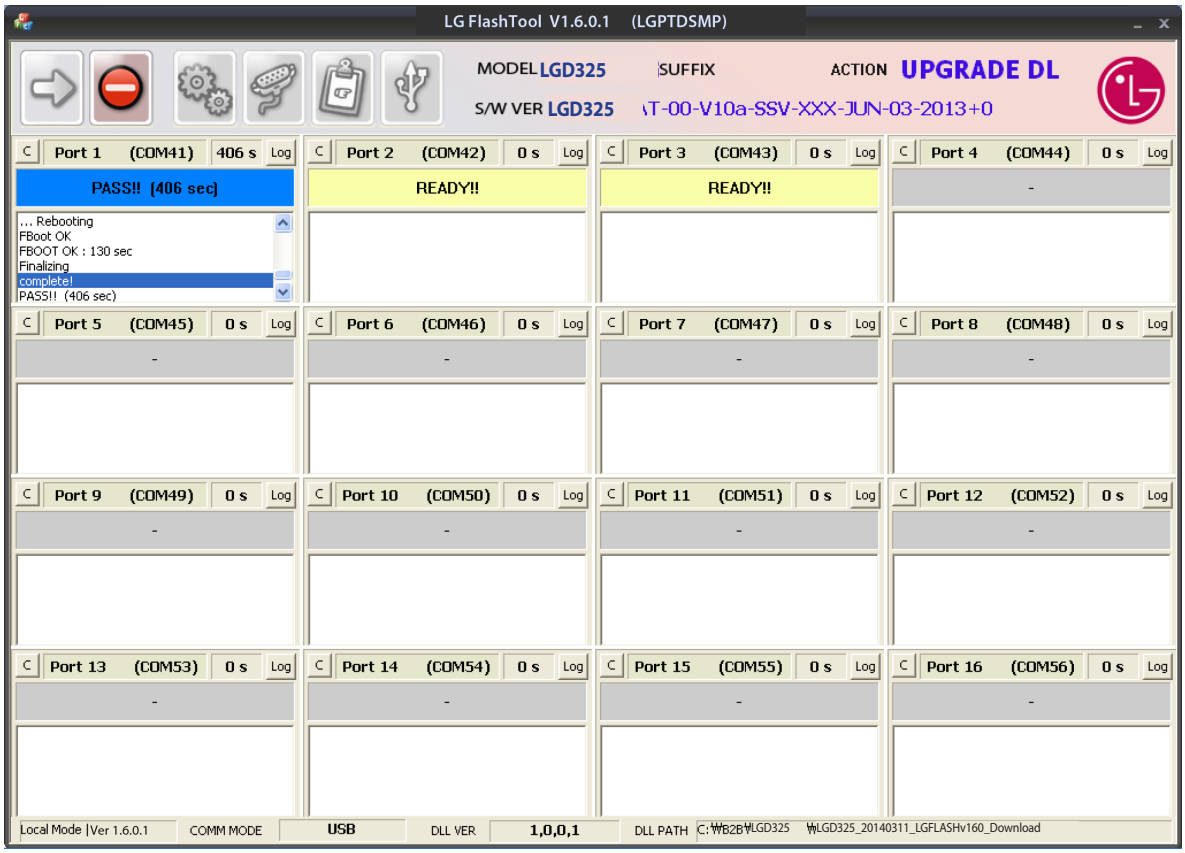

Copyright © 2014 LG Electronics. Inc. All right reserved.
Only for training and service purposes

5. BLOCK DIAGRAM

[D325] Total Block Diagram

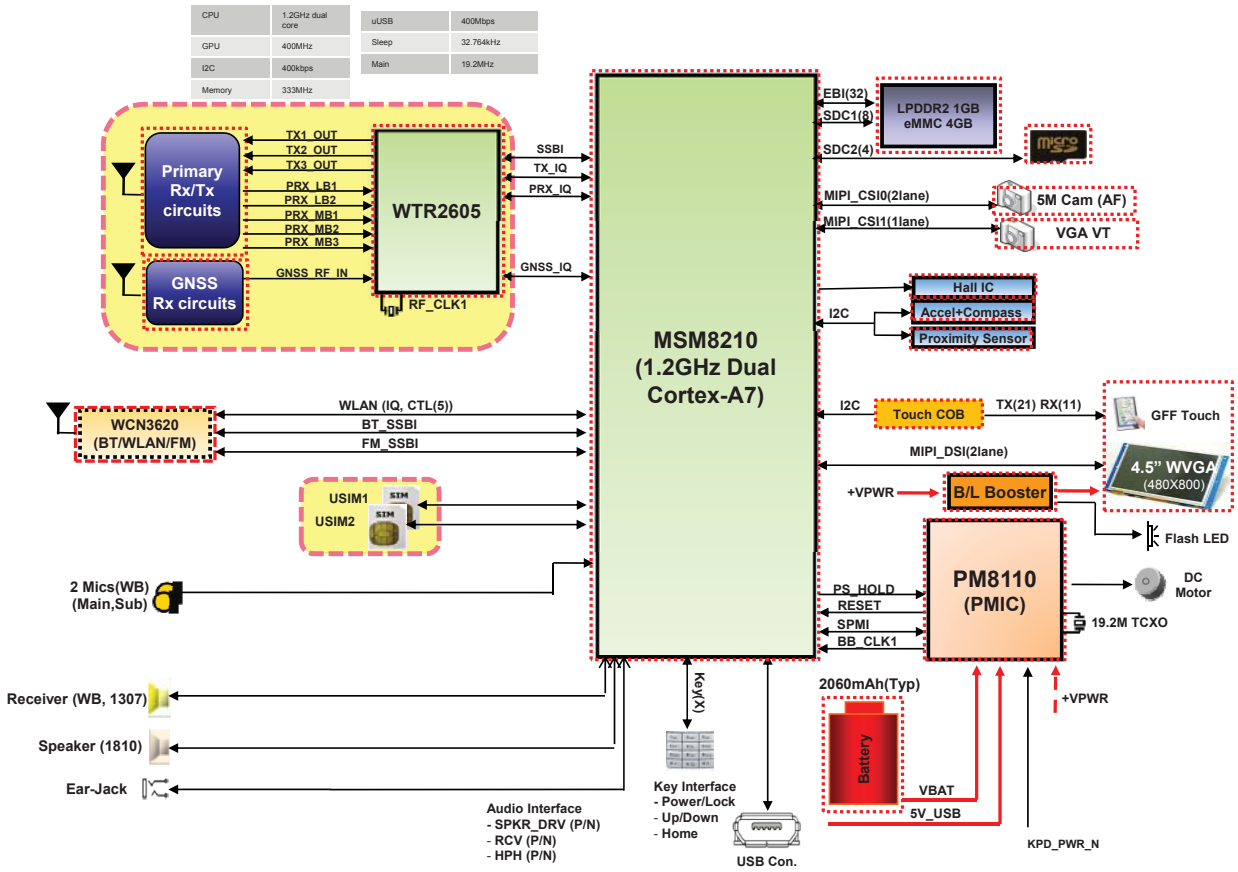

Copyright © 2014 LG Electronics. Inc. All right reserved.
Only for training and service purposes

[D325] RF Block Diagram

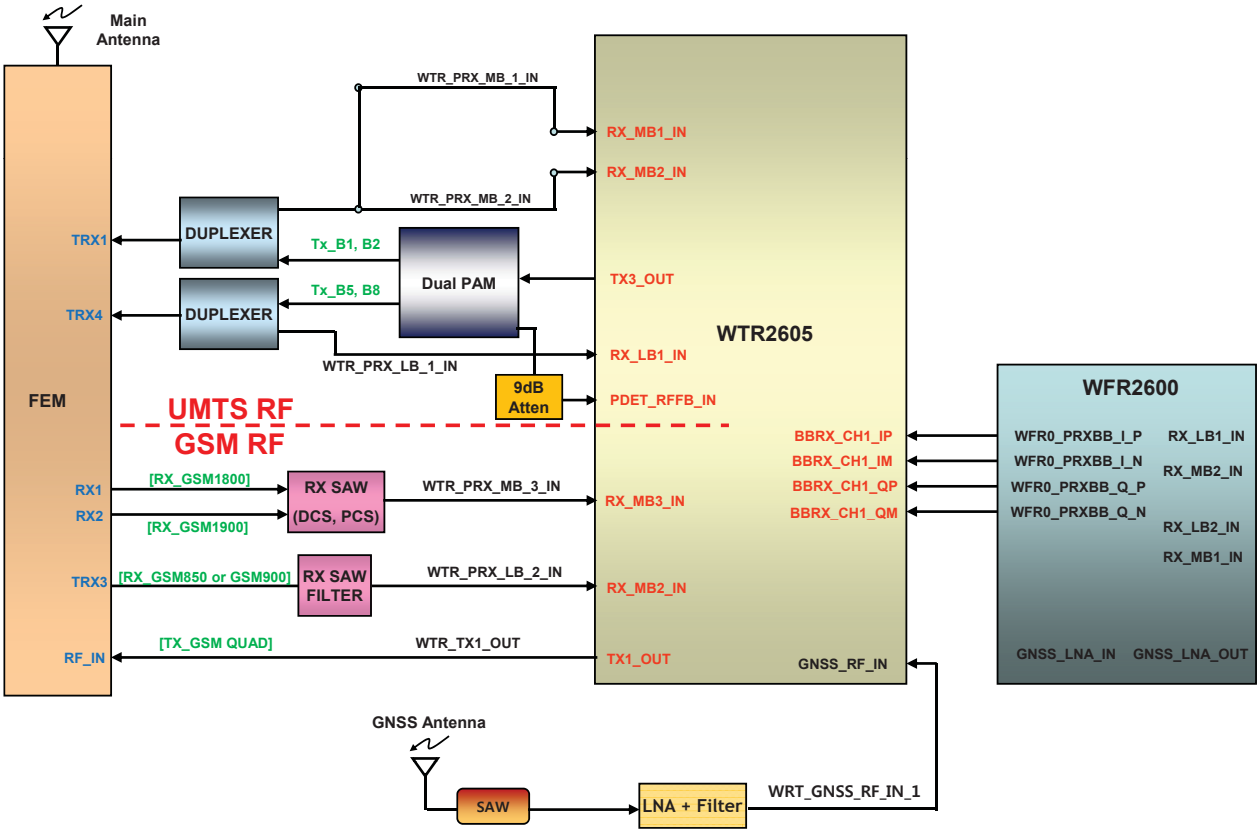

Copyright © 2014 LG Electronics. Inc. All right reserved.
Only for training and service purposes

[D325] RF(GSM)

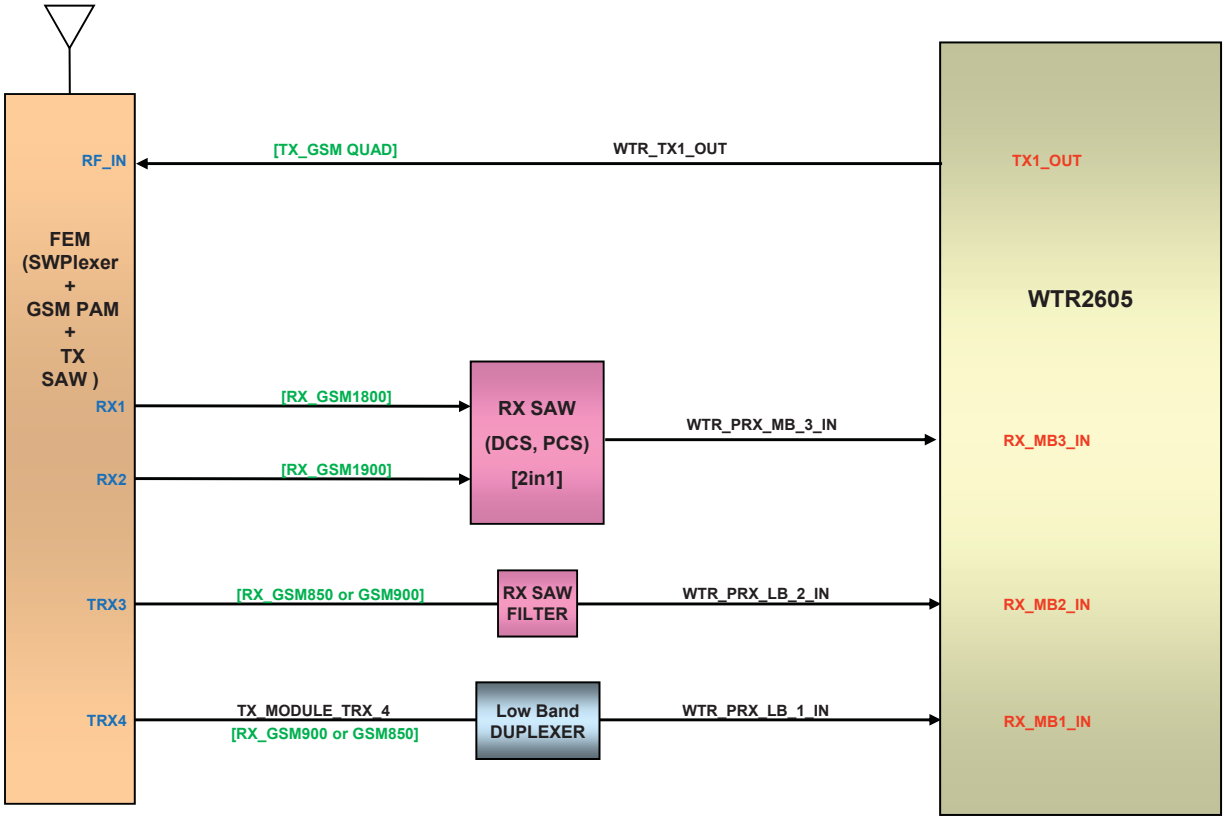

Copyright © 2014 LG Electronics. Inc. All right reserved.
Only for training and service purposes

[D325] RF(WCDMA)

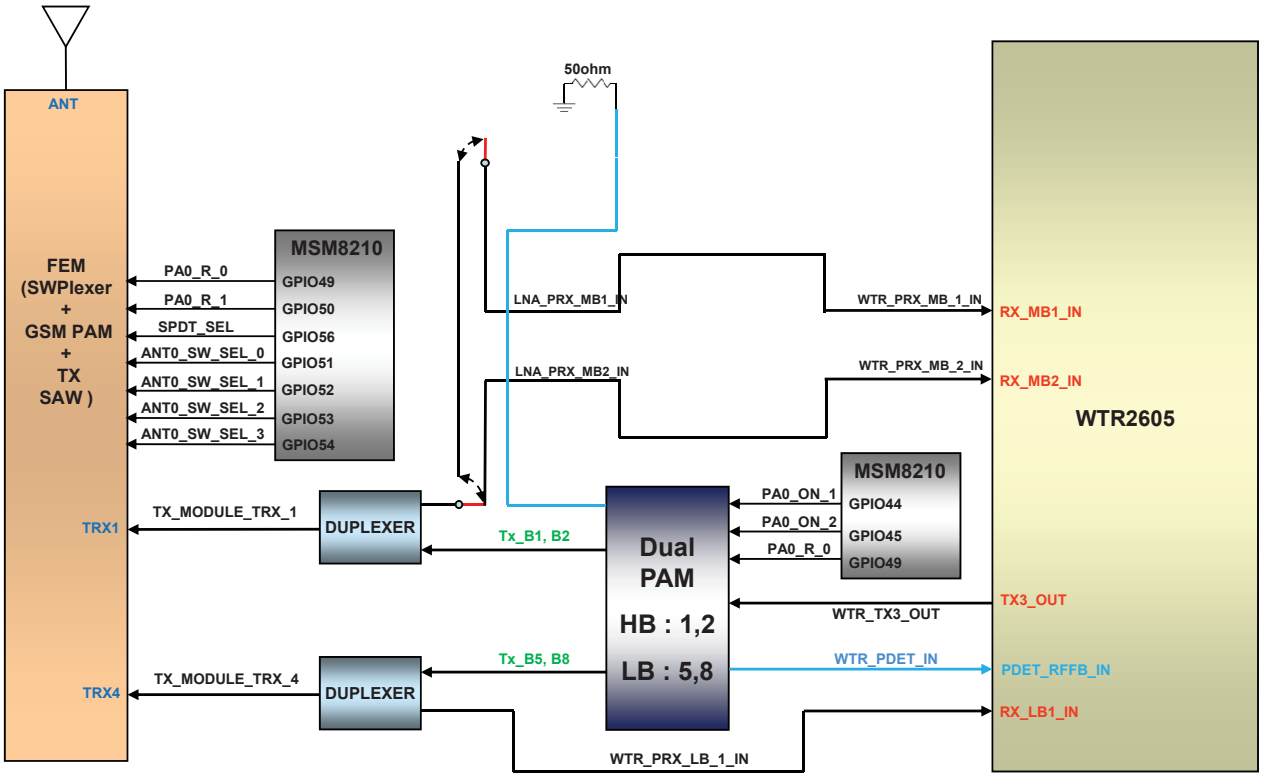

Copyright © 2014 LG Electronics. Inc. All right reserved.
Only for training and service purposes

[D325] BT/Wifi

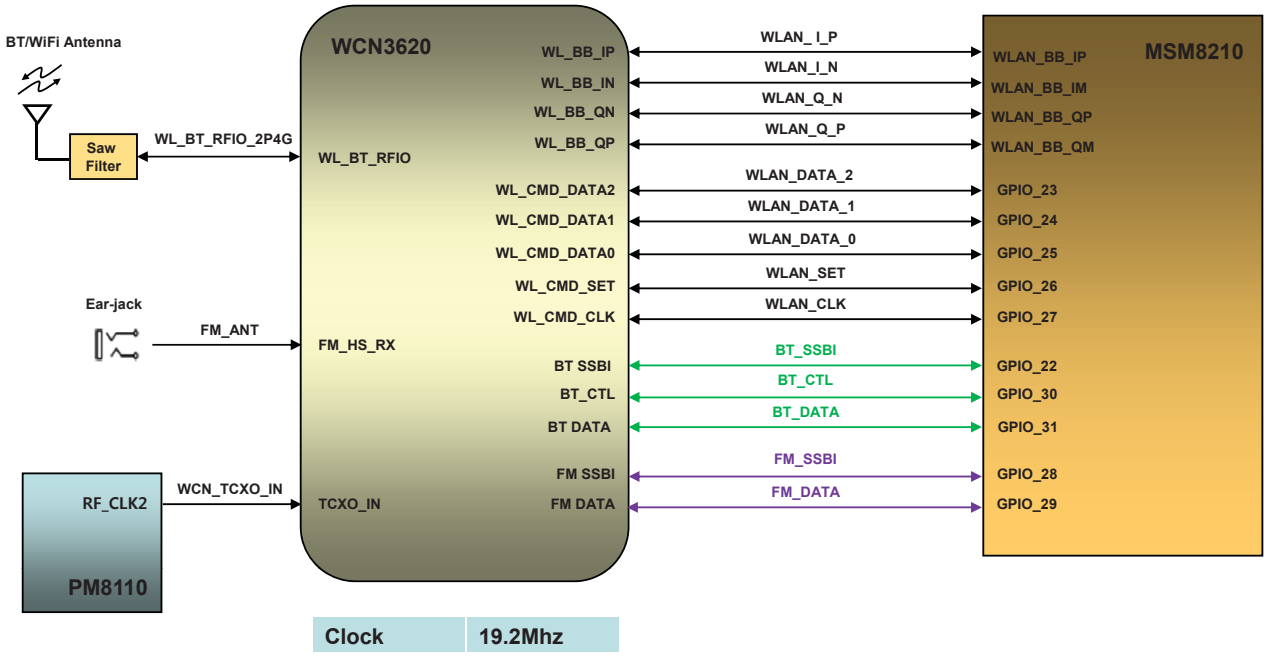

Copyright © 2014 LG Electronics. Inc. All right reserved.
Only for training and service purposes

[D325] Power

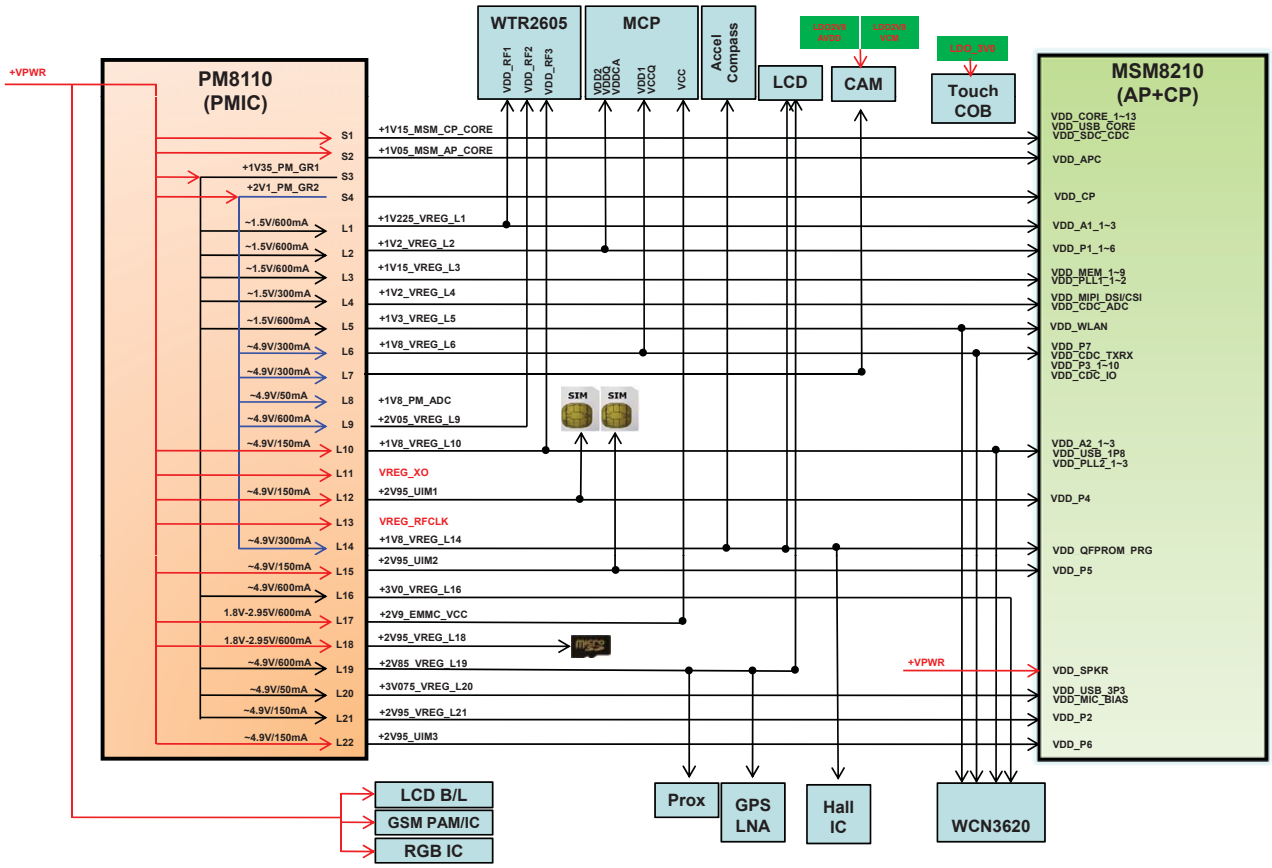

Copyright © 2014 LG Electronics. Inc. All right reserved.
Only for training and service purposes

[L70_D325] Clock

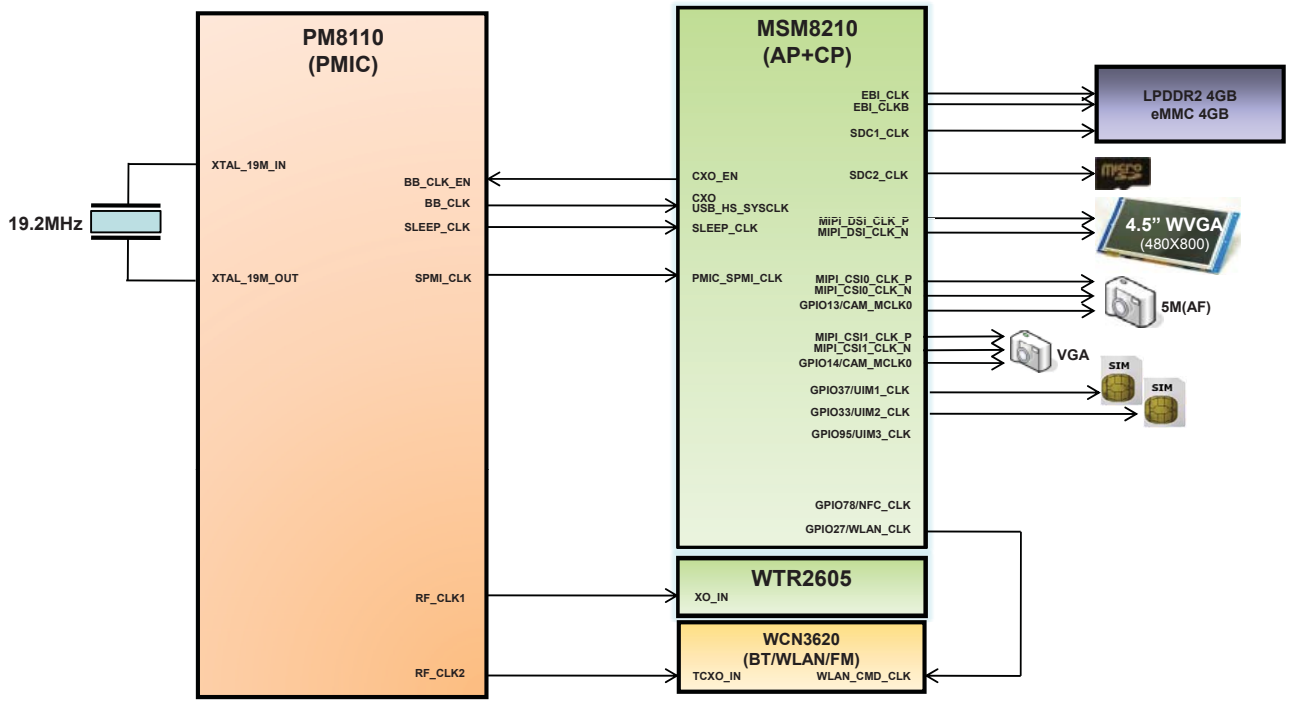

Copyright © 2014 LG Electronics. Inc. All right reserved.
Only for training and service purposes

[D325] Audio

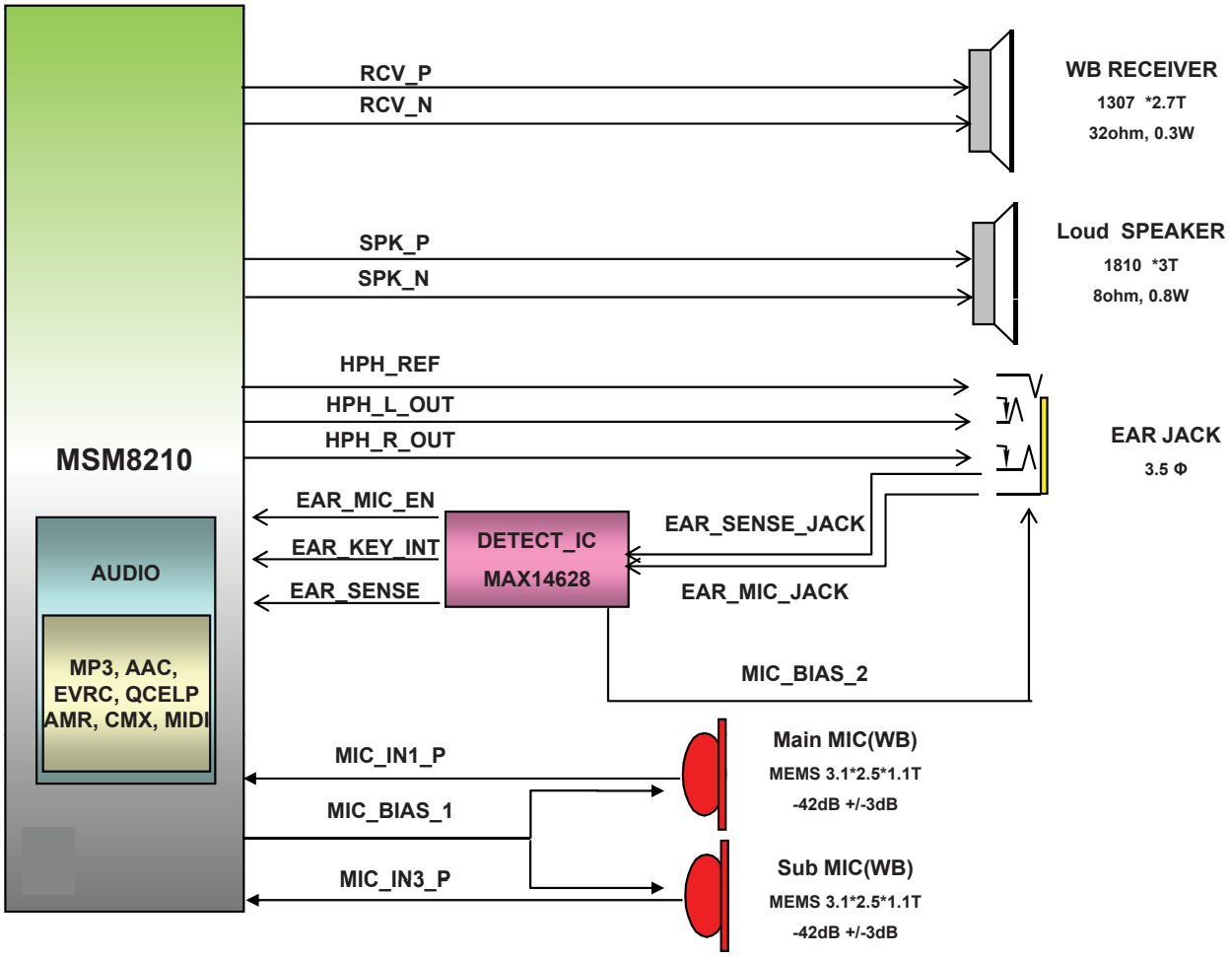

Copyright © 2014 LG Electronics. Inc. All right reserved.
Only for training and service purposes

[D325] LCD/Camera

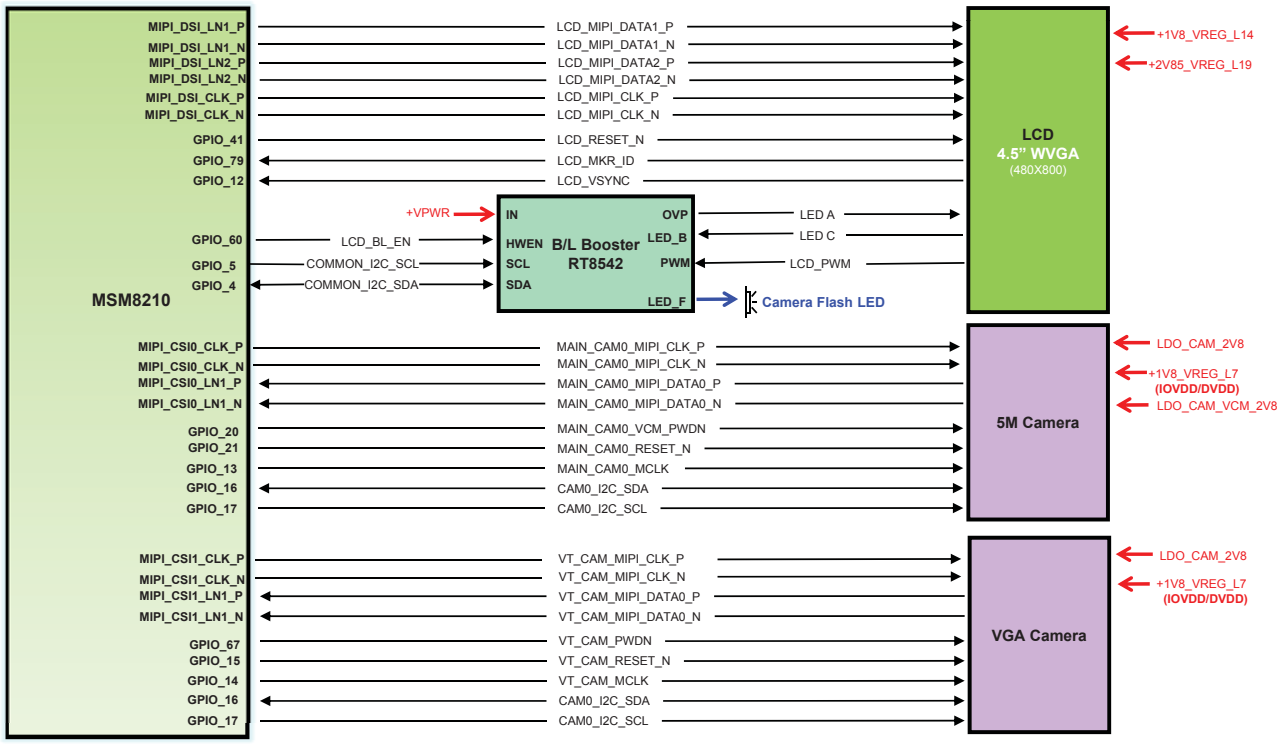

Copyright © 2014 LG Electronics. Inc. All right reserved.
Only for training and service purposes

[D325] MCP/Peripherals

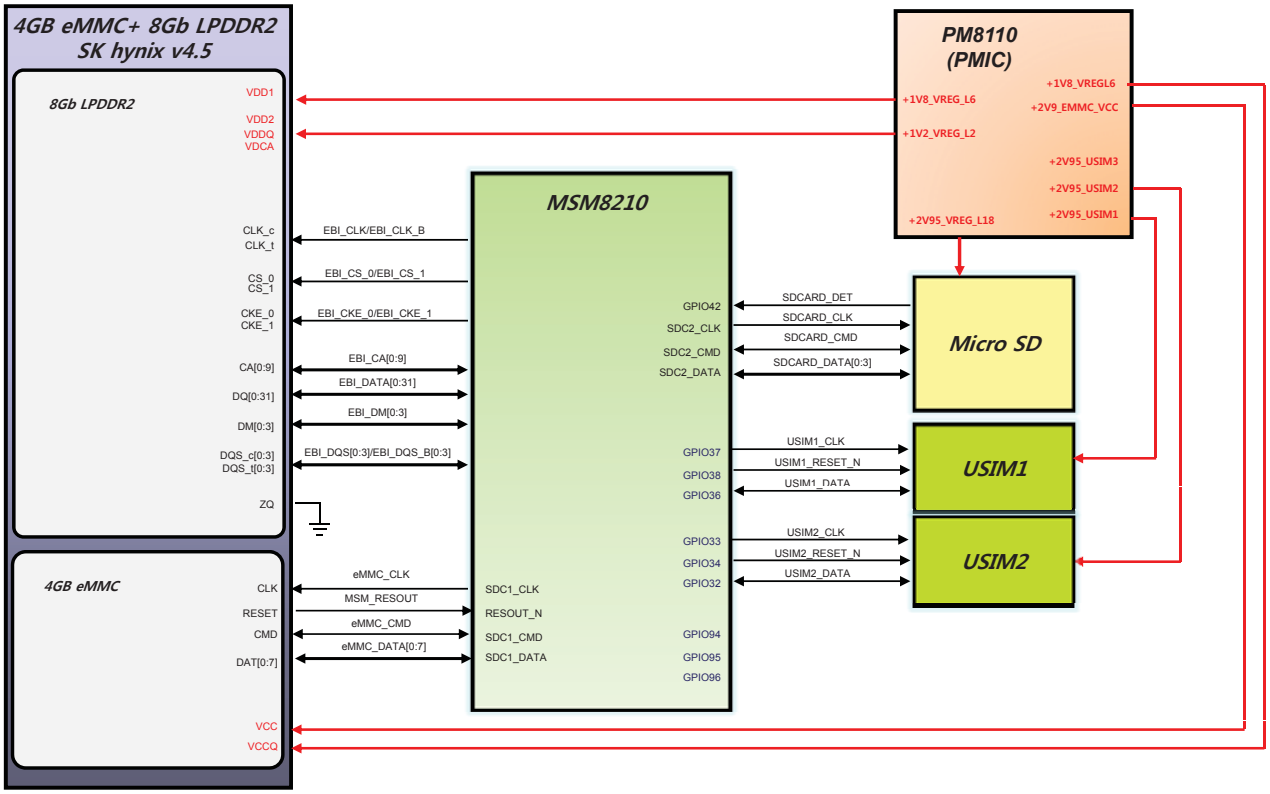

Copyright © 2014 LG Electronics. Inc. All right reserved.
Only for training and service purposes

[D325] Sensors

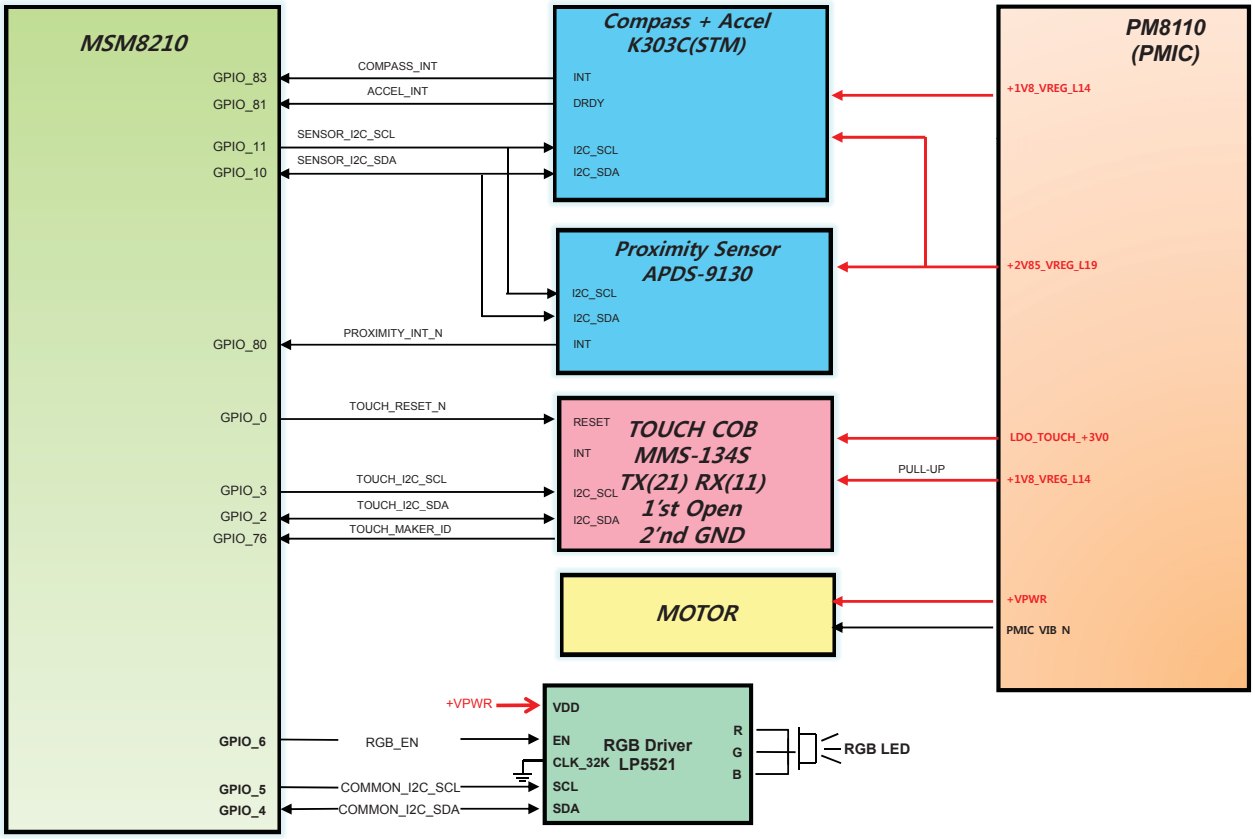

Copyright © 2014 LG Electronics. Inc. All right reserved.
Only for training and service purposes

6. CIRCUIT DIAGRAM

< 1-1-1-1_ANT_WCDMA_DUAL_DRX >

ANT1 (GSM Quad / WCDMA B1, B2, B4, B5, B8)

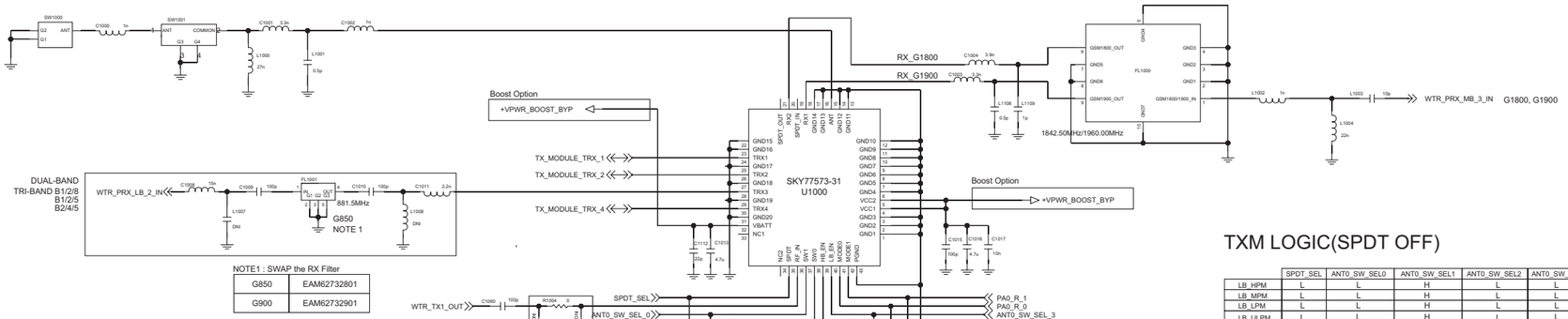

if your TxM GSM PA gain is not much greater than SKY77573 GSM PA gain. Can remove

NOTE1 : SWAP the RX Filter

G850	EAM62732801
G900	EAM62732901

TRX_MODULE_TRX1	B1,B2	B1
TRX_MODULE_TRX2	B1,B4	B4
WTR_PRX_LB_2_IN	G850 RX, G900 RX	G900 RX
TRX_MODULE_TRX4	B5,B8	B5

TXM LOGIC(SPDT OFF)

	SPDT_SEL	ANT0_SW_SEL0	ANT0_SW_SEL1	ANT0_SW_SEL2	ANT0_SW_SEL3	PA0_R0	PA0_R1
LB_HPM	L	L	H	L	L	L	L
LB_MPM	L	L	H	L	L	L	H
LB_LPM	L	L	H	L	L	H	L
LB_ULPM	L	L	H	L	L	H	H
HB_HPM	L	H	L	L	L	L	L
HB_MPM	L	H	L	L	L	L	H
HB_LPM	L	H	L	L	L	H	L
HB_ULPM	L	H	L	L	L	H	H
TRX1	H	L	L	L	L	-	-
TRX2	H	L	L	H	L	-	-
TRX3	H	L	H	L	L	-	-
TRX4	H	L	H	H	L	-	-
RX1	H	H	H	H	L	-	-
RX2	H	H	H	H	H	-	-

ANT3 (GNSS)

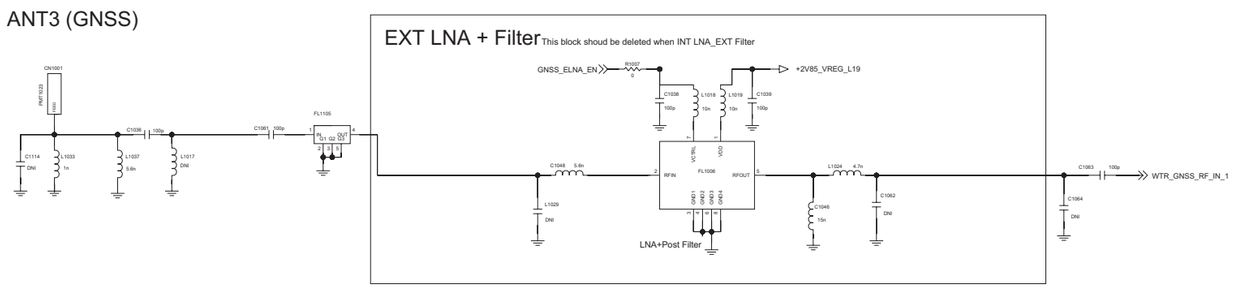

Copyright © 2014 LG Electronics. Inc. All right reserved.
Only for training and service purposes

< 1-1-3-1_RFIC_WTR2605 >

Rev_0.4

WCDMA							
WTR2605	B2, B4, B5	B1, B2, B5	B1, B2, B8	B1, B5, B8	B2, B5	B1, B5	B1, B8
TX1_OUT	GSM	GSM	GSM	GSM	GSM	GSM	GSM
TX2_OUT	B4	B1	B1	B5			
TX3_OUT	B2, B5	B2, B5	B2, B8	B1, B8	B2, B5	B1, B5	B1, B8
RX_LB1_IN	B5(G850)	B5(G850)	B8(G900)	B8(G900)	B5(G850)	B5(G850)	B8(G900)
RX_LB2_IN	G900	G900	G850	B5(G850)	G900	G900	G850
RX_MB1_IN	B4	B1	B1	B1			B1
RX_MB2_IN	B2	B2	B2		B2	B2	
RX_MB3_IN	G1800,G1900	G1800,G1900	G1800,G1900	G1800,G1900	G1800,G1900	G1800,G1900	G1800,G1900

CDMA			
WTR2605	VZW	SPCS	Metro PCS
TX1_OUT			
TX2_OUT	BC0(BC10)	BC0(BC10)	BC0(BC10),BC15
TX3_OUT	BC1	BC1	BC1
RX_LB1_IN	BC0(BC10)	BC0(BC10)	BC0(BC10)
RX_LB2_IN			
RX_MB1_IN			BC15
RX_MB2_IN	BC1	BC1	BC1
RX_MB3_IN			

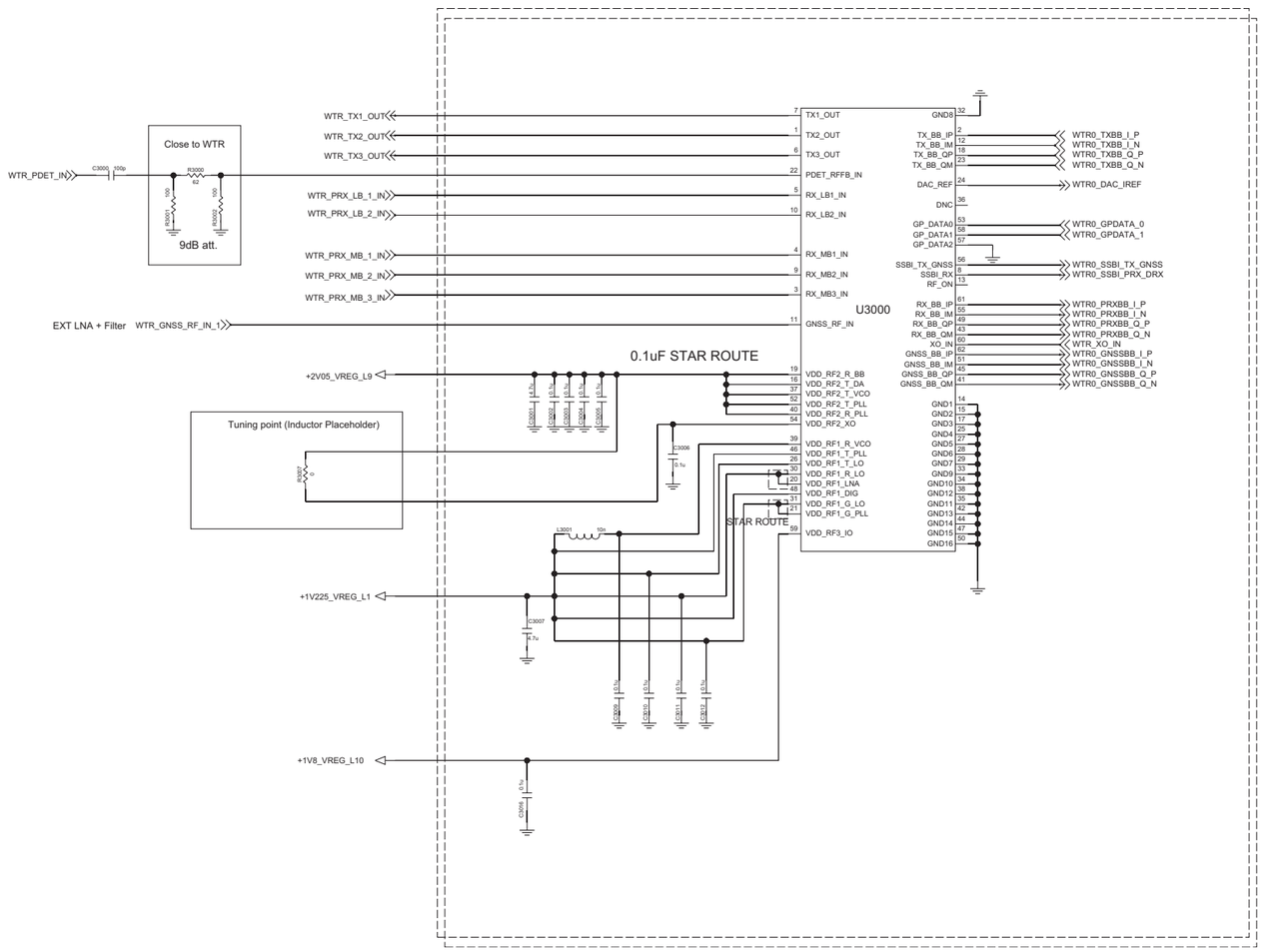

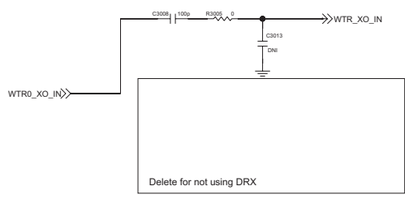

Copyright © 2014 LG Electronics. Inc. All right reserved.
Only for training and service purposes

< 1-1-4-1 TRX_WCDMA_B1_B2_B4_B5_B8 TRIPLE > Rev 0.4

Band	B1	B2	B1	B4
				B2
	B5	B5	B8	B5
C2003	DNI	DNI	DNI	100pF
C2037	100pF	DNI	100pF	DNI
C2063	DNI	33pF	DNI	33pF

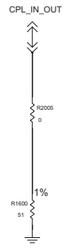

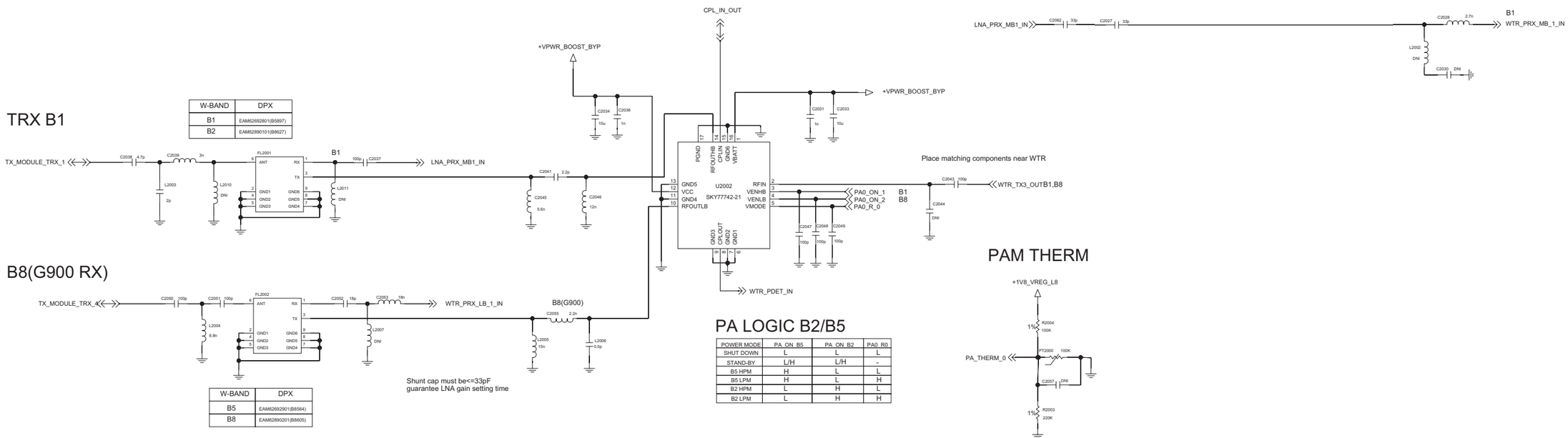

Copyright © 2014 LG Electronics. Inc. All right reserved.
Only for training and service purposes

<2-1-4-1-1_MSM8210_CONTROL> REV.0.4

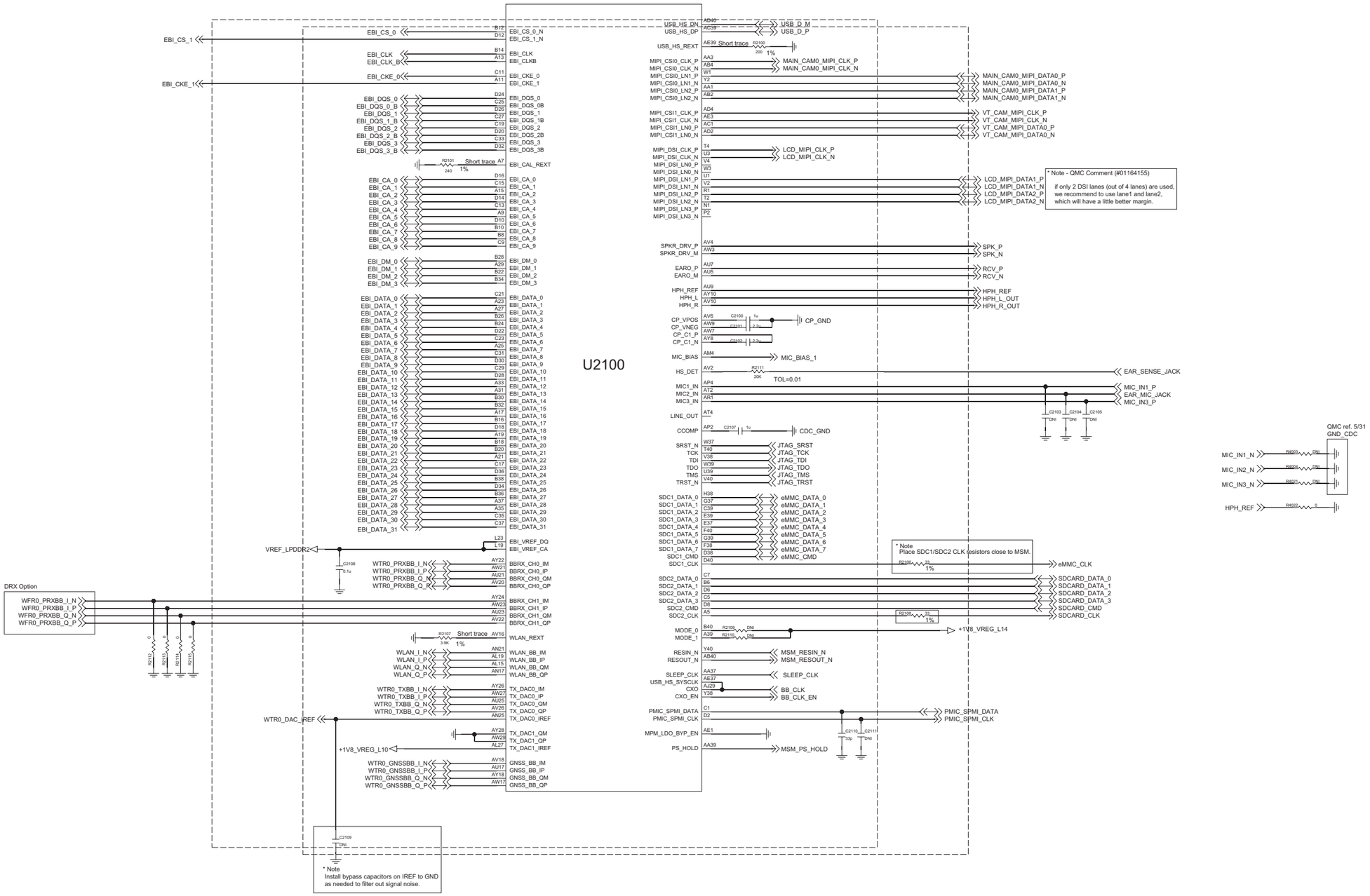

Copyright © 2014 LG Electronics. Inc. All right reserved.
Only for training and service purposes

<2-1-4-1-2_MSM8210_GPIO> REV.0.4

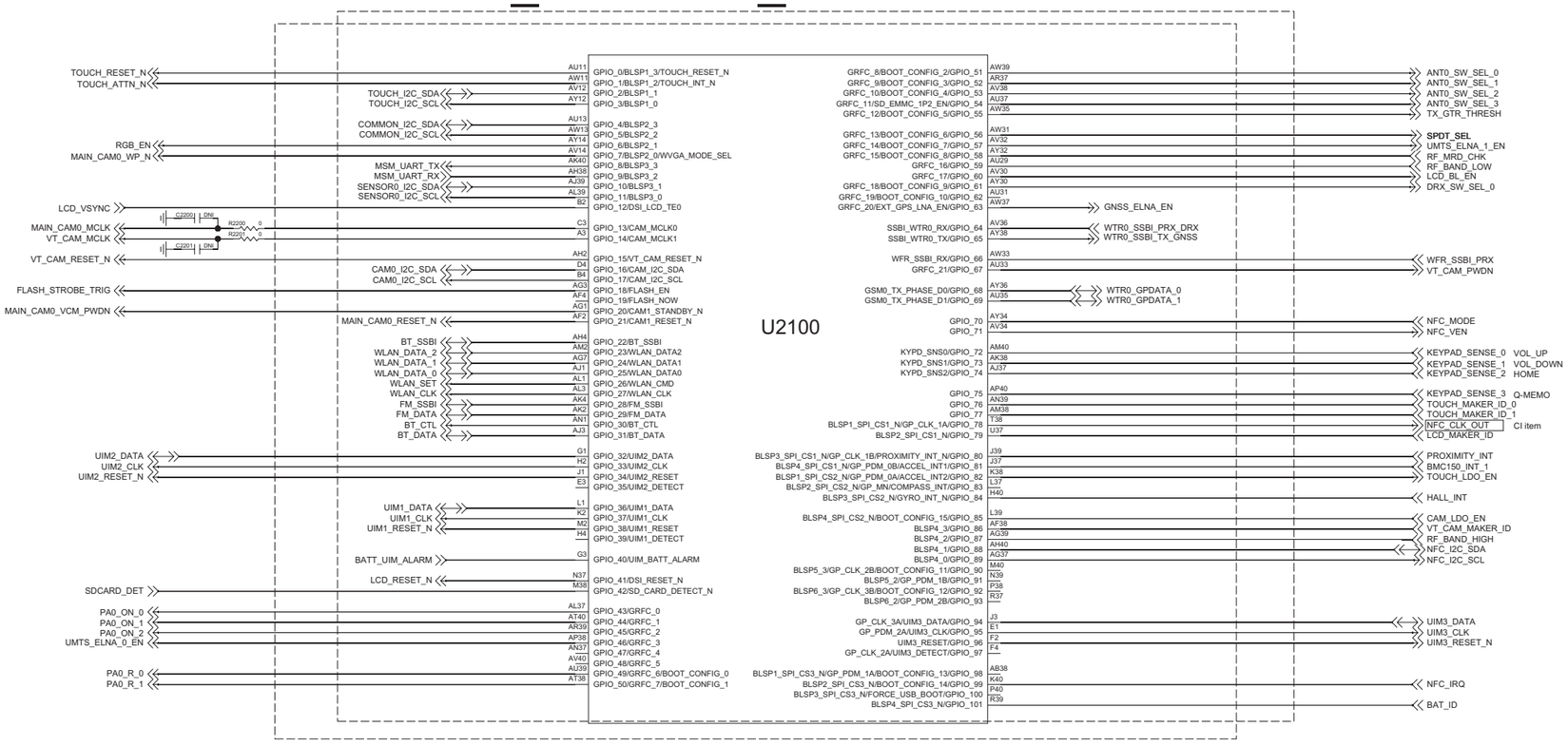

I2C Pull-up

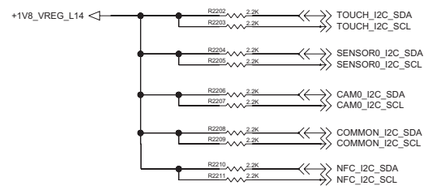

RF BAND Check

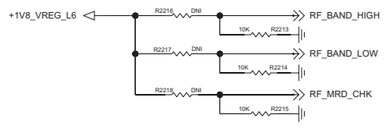

	LOW	HIGH	MRD
GPIO	59	87	58
EU_1_8	L	L	L
F_1_5	L	L	H
G_2_5	L	H	H
F_1_5+8M	H	L	H
G_2_5+8M	H	H	H
J_2_8+8M	L	H	L
EU_MRD	H	L	L
NO_FM Radio	H	H	L

Copyright © 2014 LG Electronics. Inc. All right reserved.
Only for training and service purposes

<2-1-4-1-3_MSM8210_POWER> REV.0.4

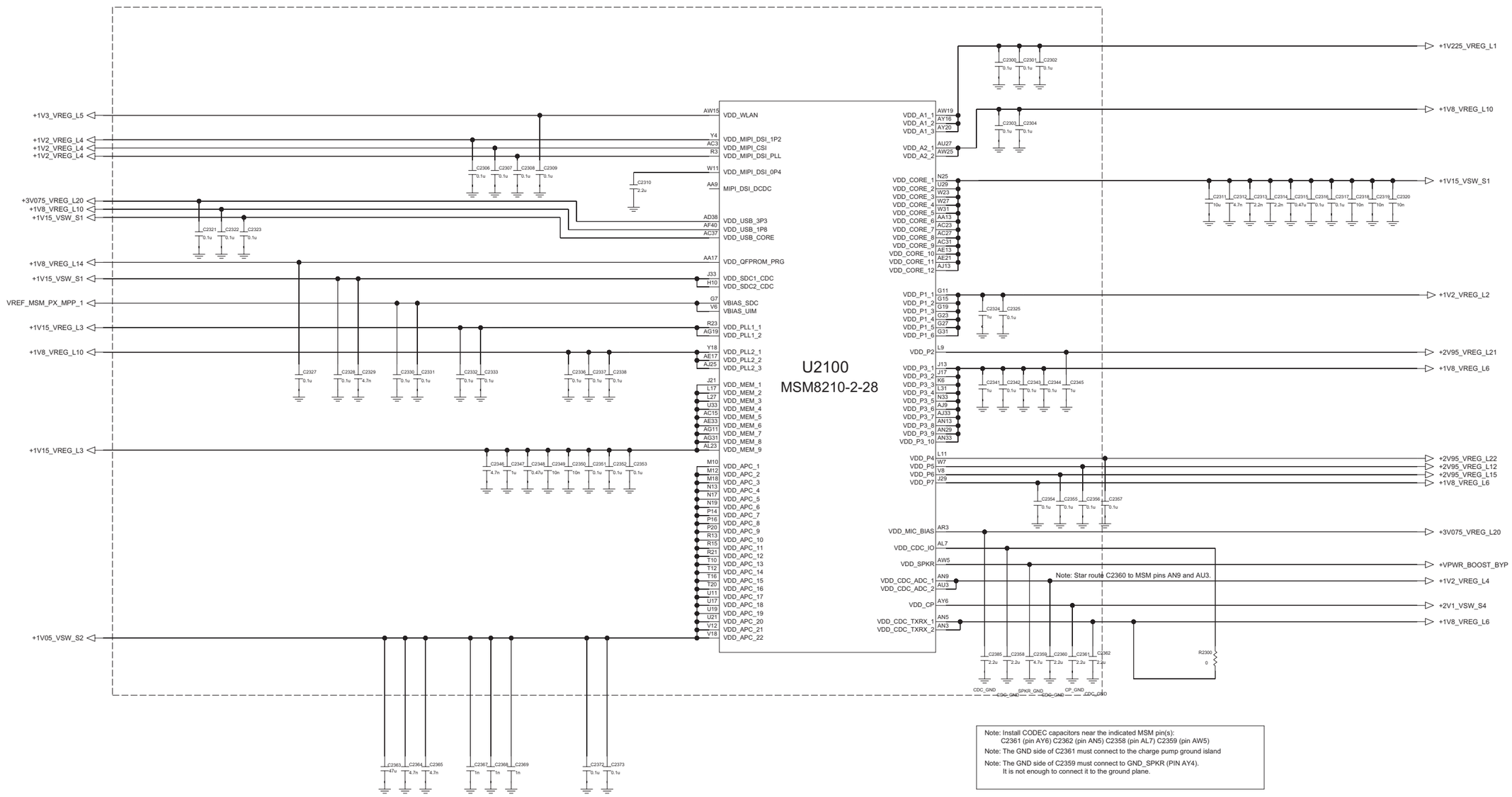

Copyright © 2014 LG Electronics. Inc. All right reserved.
Only for training and service purposes

<2-1-4-1-4_MSM8210_GND/NC>
REV.0.4

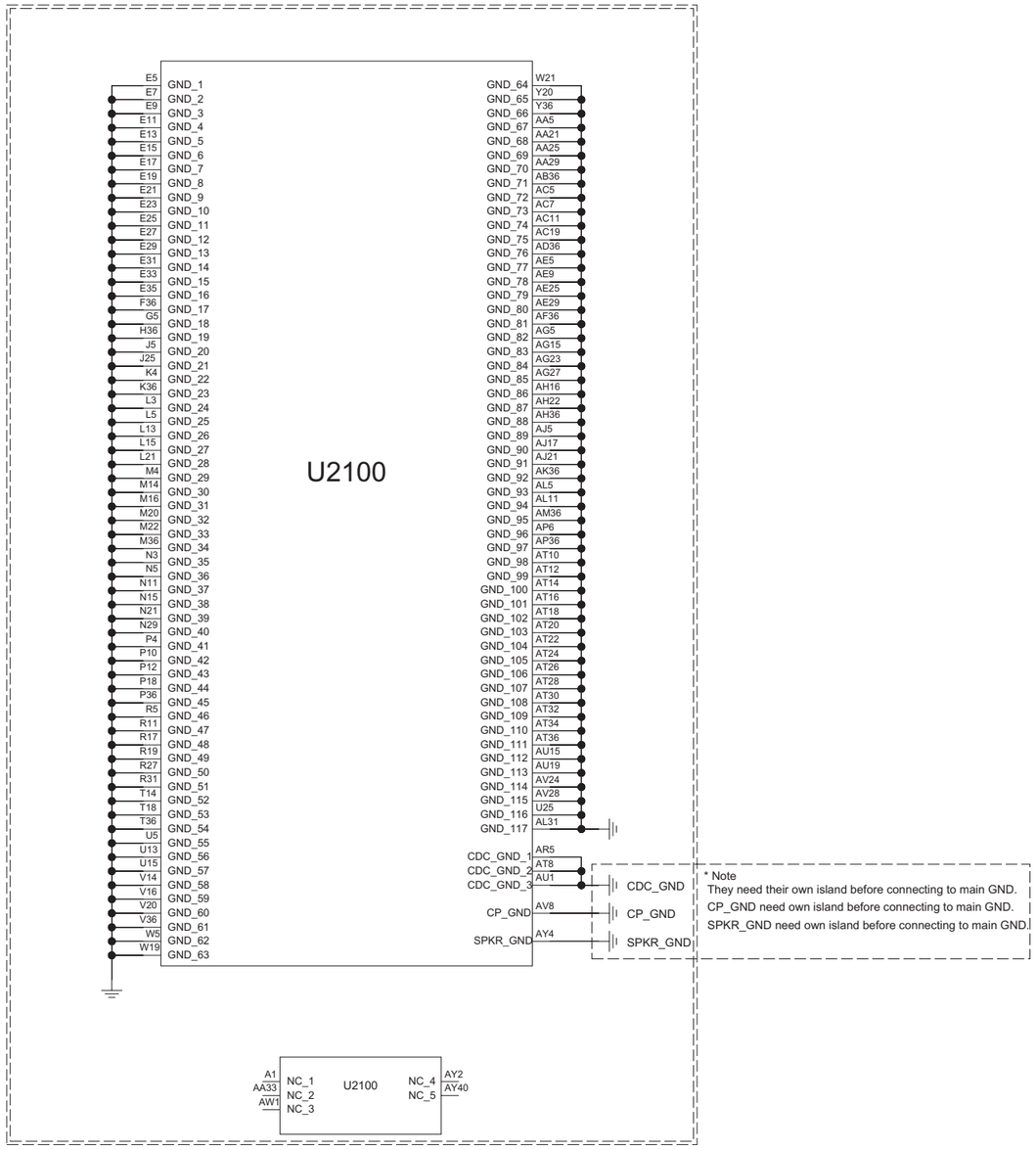

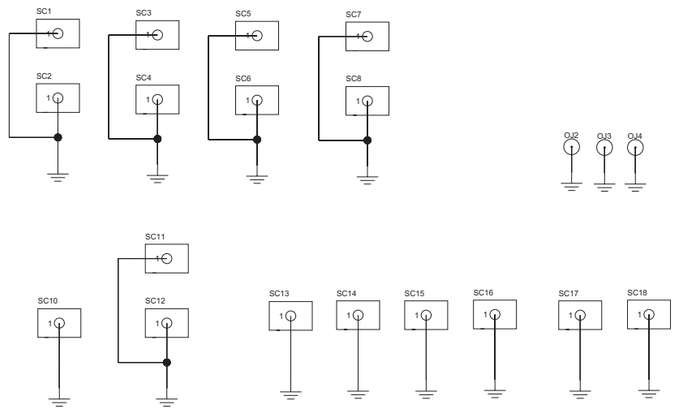

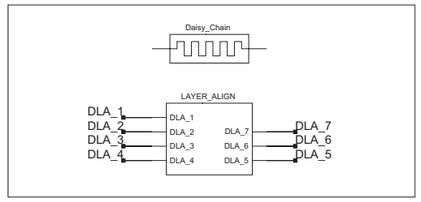

Copyright © 2014 LG Electronics. Inc. All right reserved.
Only for training and service purposes

3_3_2_3_5_MCP_eMMC_v4_5_4G_DDR2_8G_SK_Hynix REV.0.4

eMMC 4.5

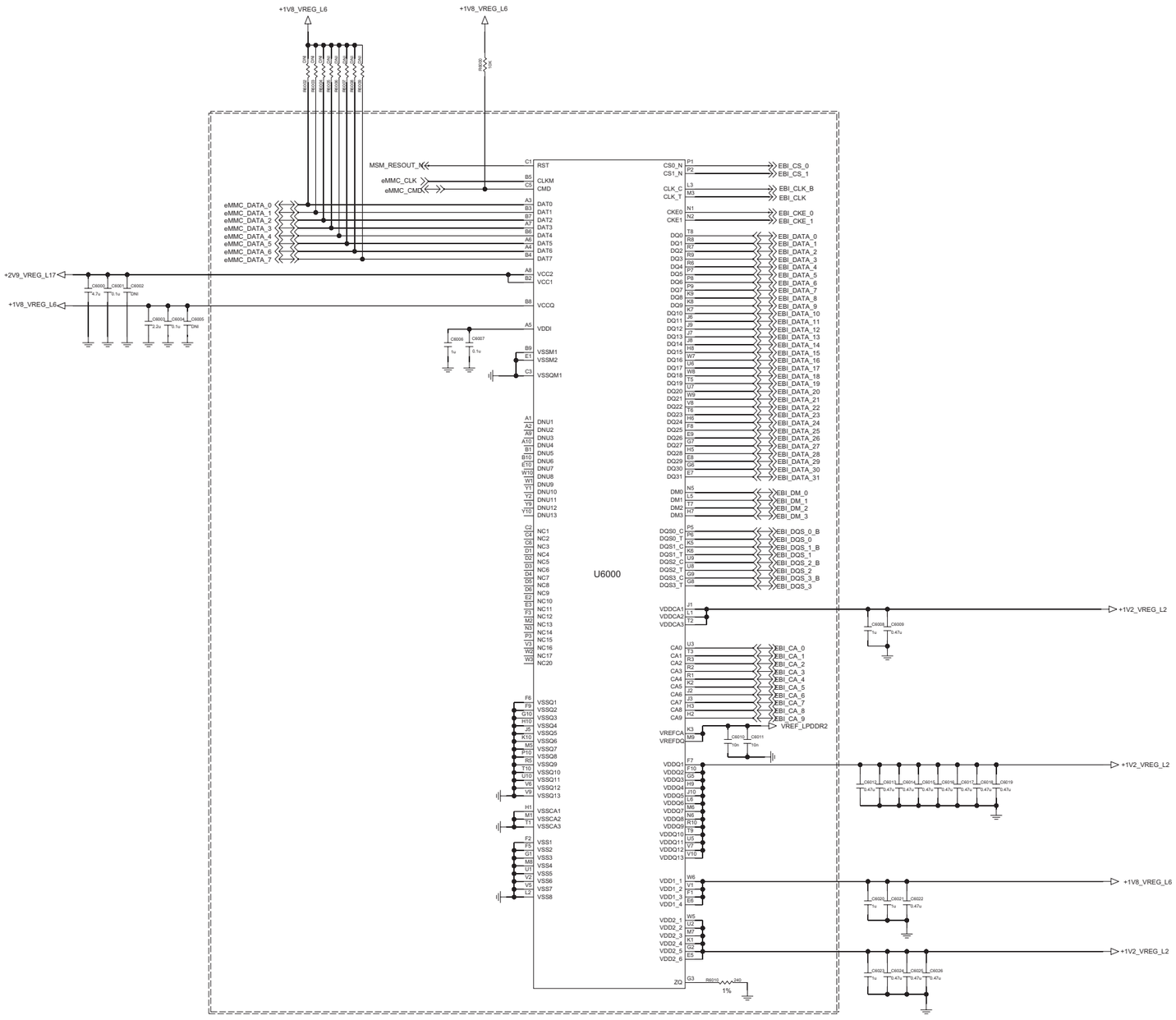

Copyright © 2014 LG Electronics. Inc. All right reserved.
Only for training and service purposes

<4-1-4-1_PMIC_PM8110_DATA>
REV.0.4

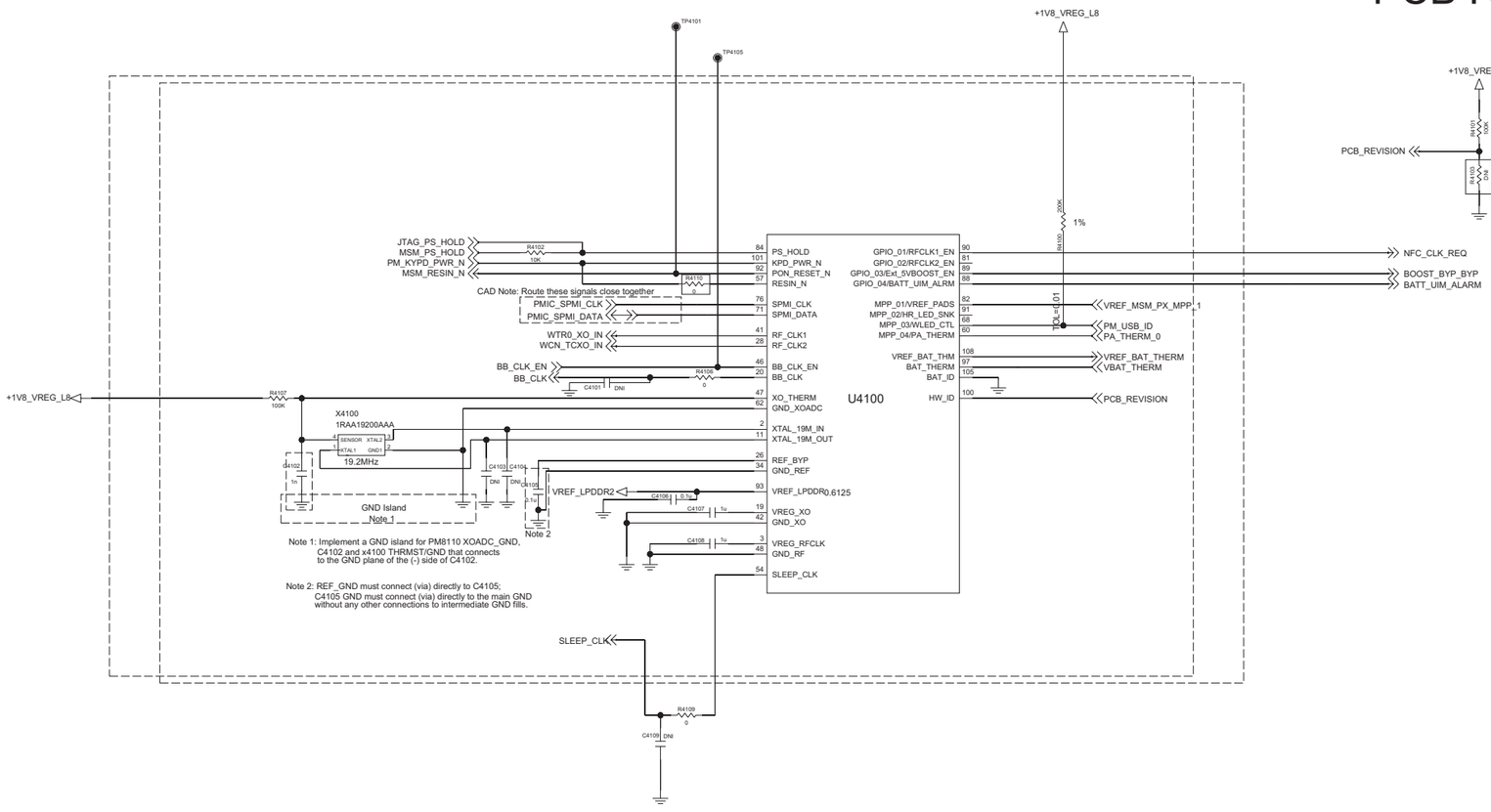

PCB REVISION

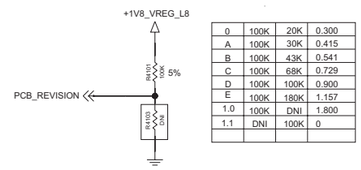

0	100K	20K	0.300
A	100K	30K	0.415
B	100K	43K	0.541
C	100K	68K	0.729
D	100K	100K	0.900
E	100K	180K	1.157
1.0	100K	DNI	1.800
1.1	DNI	100K	0

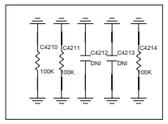

RF_BAND_SEL

	1	2	4	8	16
	C4214	C4213	C4210	C4211	C4212
D320n					
D320nr	O				
D320		O			
D320f	O	O			
D320g			O		
D320f8	O		O		
D320g8		O	O		
D320j8	O	O	O		
D320TR				O	
Canada	O			O	
MS323		O		O	
D321	O	O		O	
L42G			O	O	
D325	O		O	O	
D325f		O	O	O	
D325g	O	O	O	O	
D340f8					O
D325f8	O				O
D325g8		O			O
	O	O			O
			O		O

Copyright © 2014 LG Electronics. Inc. All right reserved.
Only for training and service purposes

<4-1-4-2_PMIC_PM8110_POWER> REV.0.4

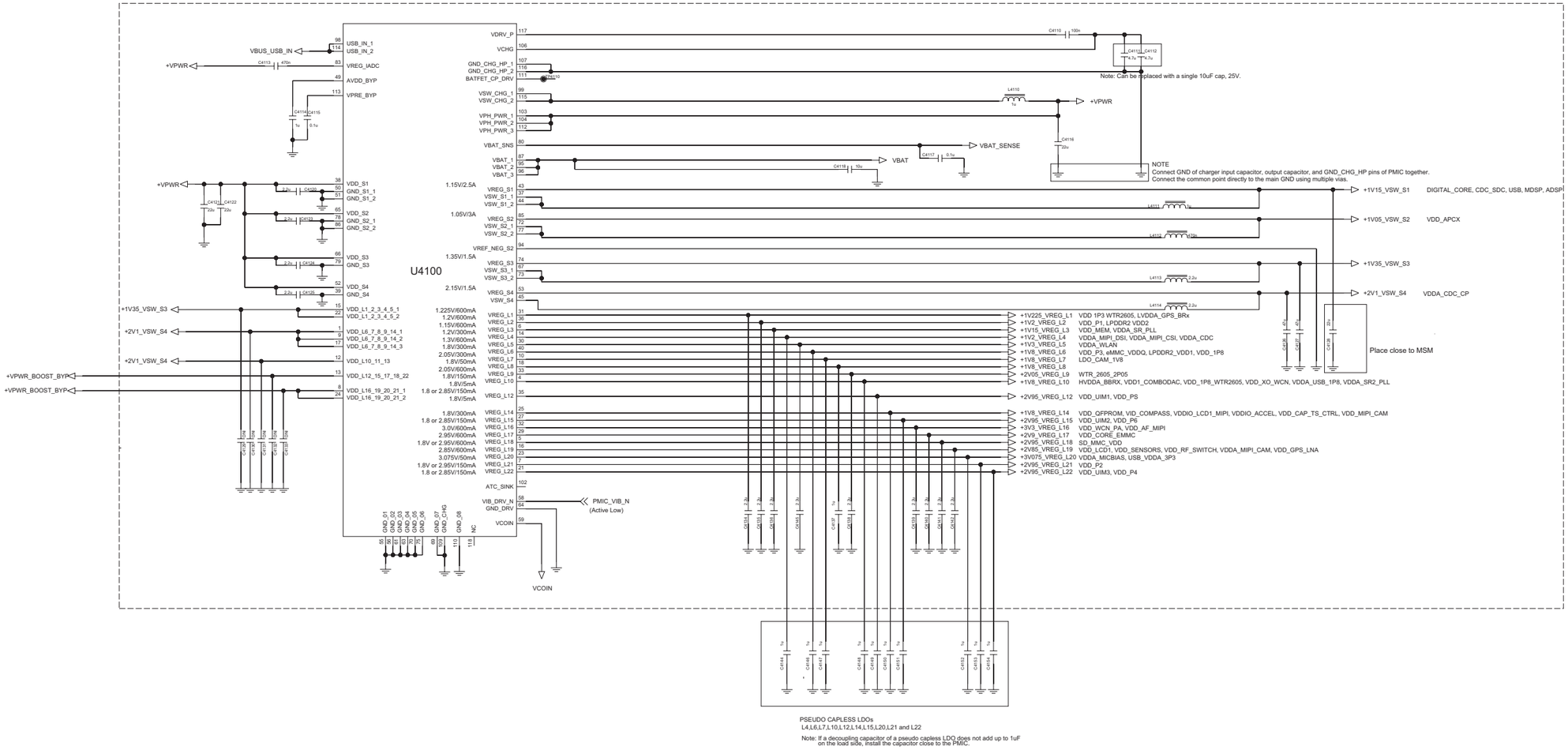

BACKUP BATT

Copyright © 2014 LG Electronics. Inc. All right reserved.
Only for training and service purposes

<4-3-2_OVP_MAX14528> REV.0.4

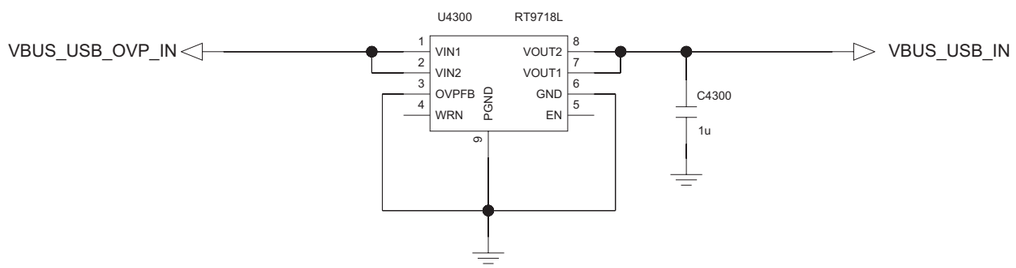

<4-4-3_LCD_Backlight_IC_RT8542> REV_0.3

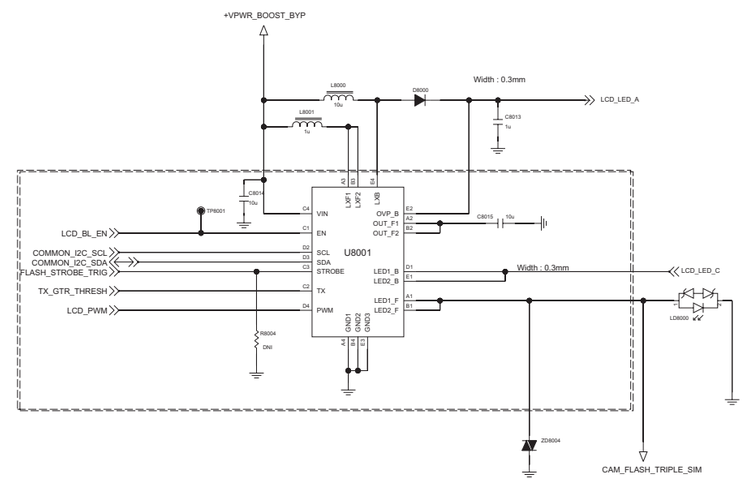

< 4-9-1-4-1_Bypass_Boost_TPS61282 > Rev_0.4

TPS61281 and TPS61281 pin to pin version must be changed to TPS61282

+VPWR_BOOST_BYP	For TMUS
+VPWR	Others

EN	BYP_N	VSEL	Vout
0	X	X	Boost bypass disabled
1	1	0	For Vin < 3.3V, Vout = 3.3V (Boost mode) For Vin > = 3.3V, Vout = Vin(bypass mode)
1	1	1	For Vin < 3.5V, Vout = 3.5V (Boost mode) For Vin > = 3.5V, Vout = Vin (bypass mode)
1	0	X	Vout = Vin (forced bypass mode)

Copyright © 2014 LG Electronics. Inc. All right reserved.
Only for training and service purposes

<5-1-1-4> BT/WiFi Combo_WCN3620 REV.0.4

RF Filter

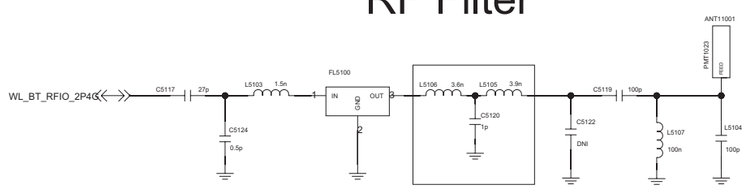

POWER/GND

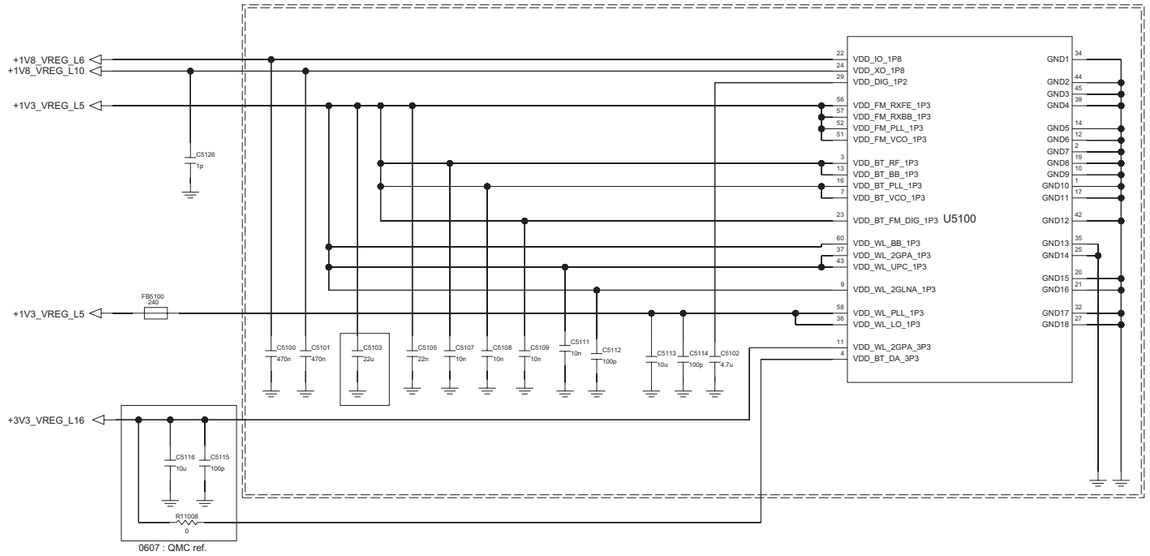

RF/CONTROL

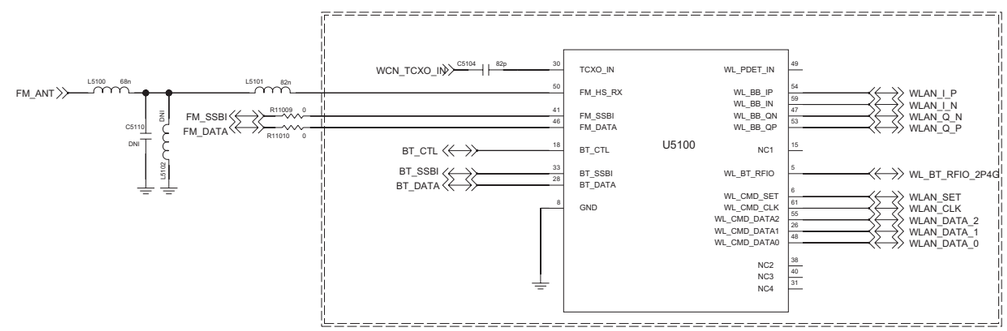

Copyright © 2014 LG Electronics. Inc. All right reserved.
Only for training and service purposes

< 6-6-1_Earjack > Rev_0.4

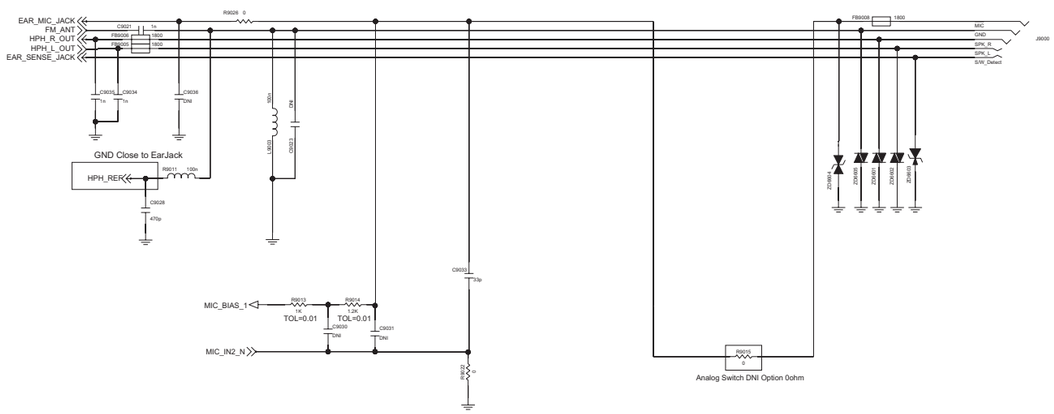

< 6-8-1_Receiver_Only > Rev_0.4

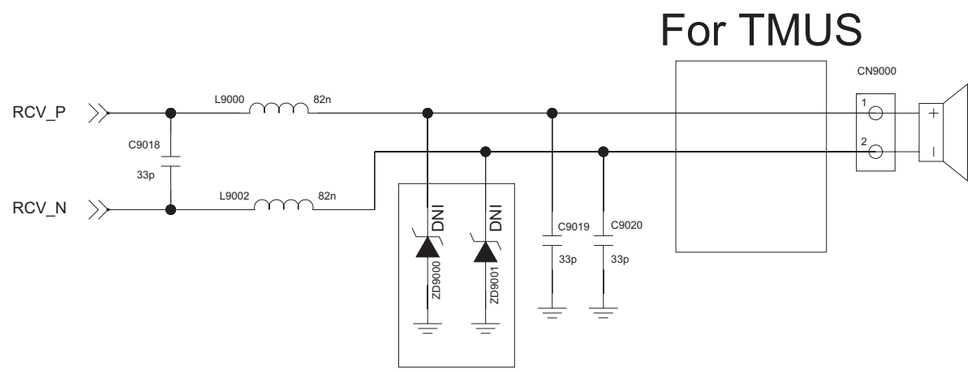

< 6-9-2_2MIC > Rev_0.4

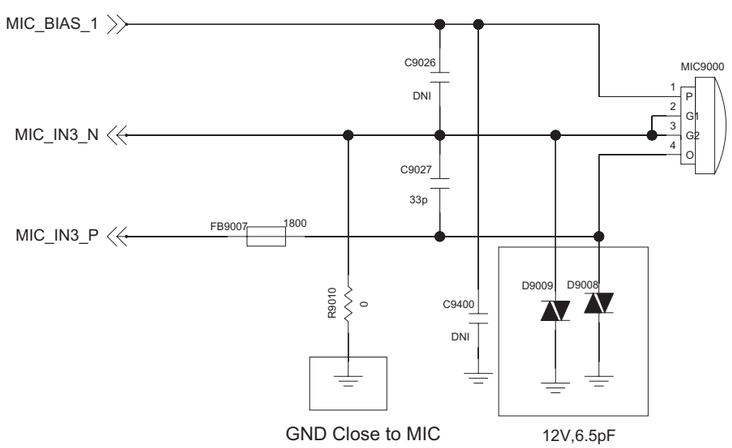

< 7-1-5-3-1 LCD_4_5inch WVGA > Rev_0.3

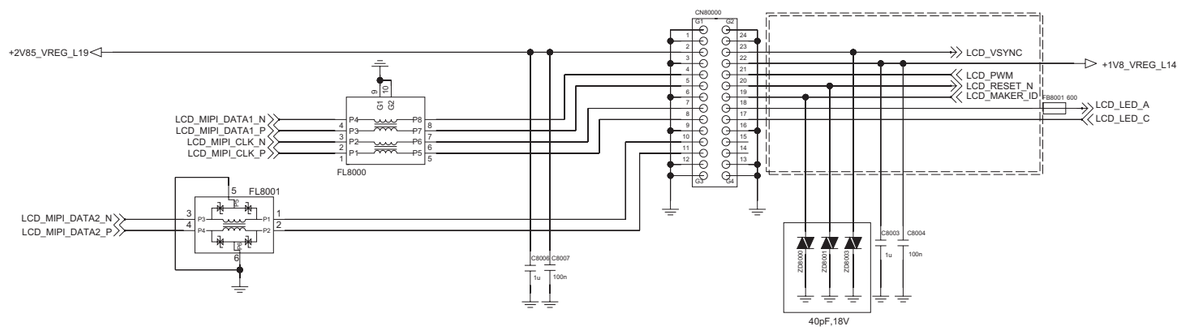

Copyright © 2014 LG Electronics. Inc. All right reserved.
Only for training and service purposes

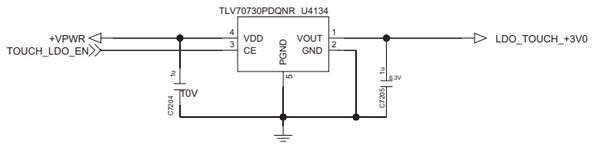

TOUCH COB

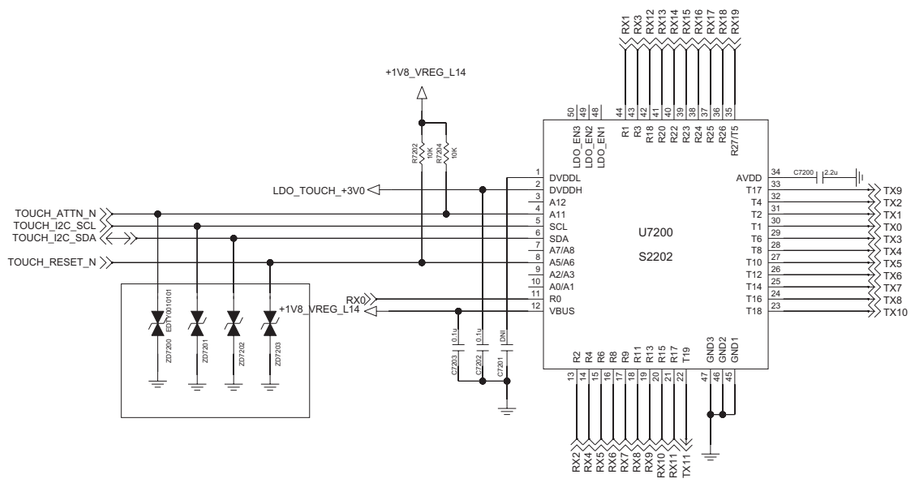

< 7-2-1-1_Touch_Connector >

Touch Connector

(B to B type)

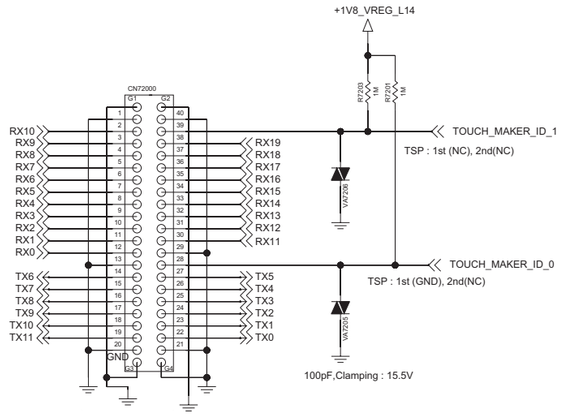

Copyright © 2014 LG Electronics. Inc. All right reserved.
Only for training and service purposes

< 7-3-2_Main_Camera_24pin_5M_8M >
Rev_0.3

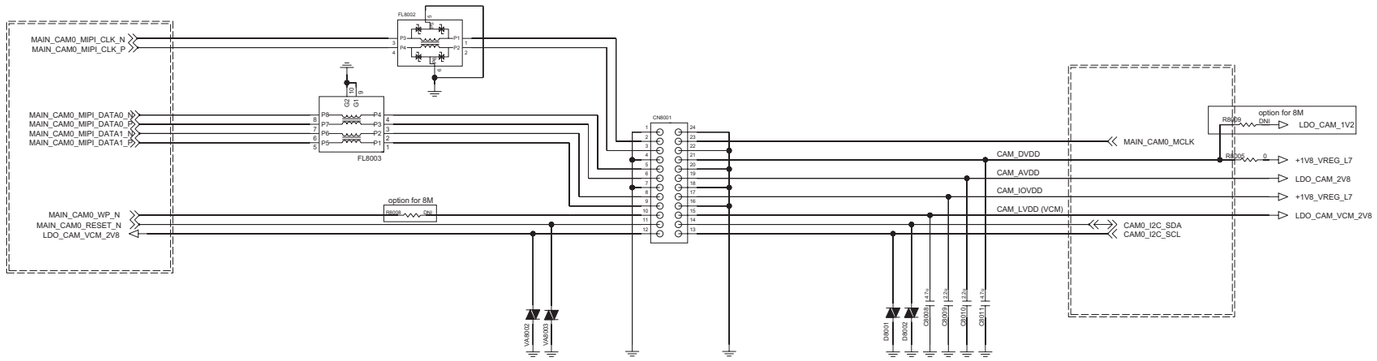

0607 : LDO for VCM

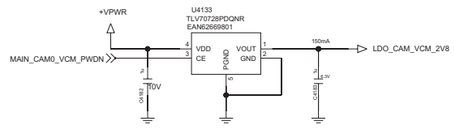

5M Camera P/N : EBP61721801

8M Camera P/N : EBP61601902

Camera LDO

option for 8M

< 7-4-1_VT_Camera_20pin_VGA_1.26M_1.3M_2.4M>
Rev_0.4

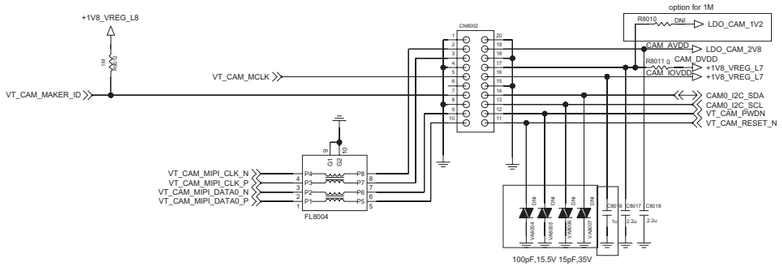

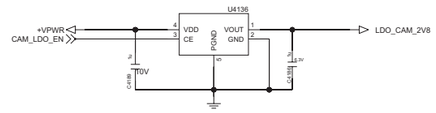

VGA Camera P/N : EBP61941701

Copyright © 2014 LG Electronics. Inc. All right reserved.
Only for training and service purposes

<8-1-2-1_Accel_Compass_BMC150> REV.0.3

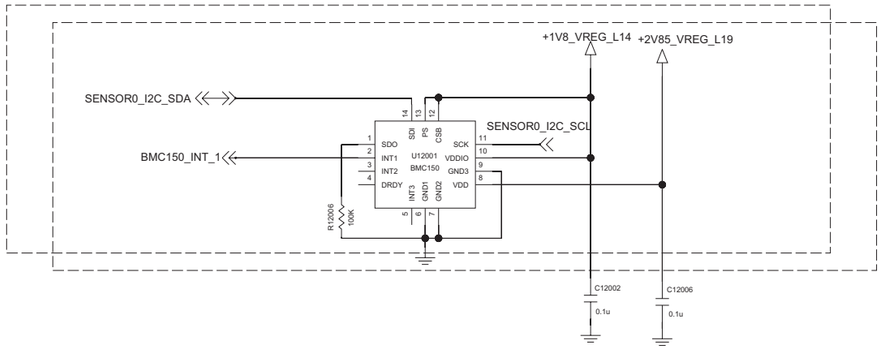

<8-4-1-1_Proximity_APDS-9130> REV.0.3

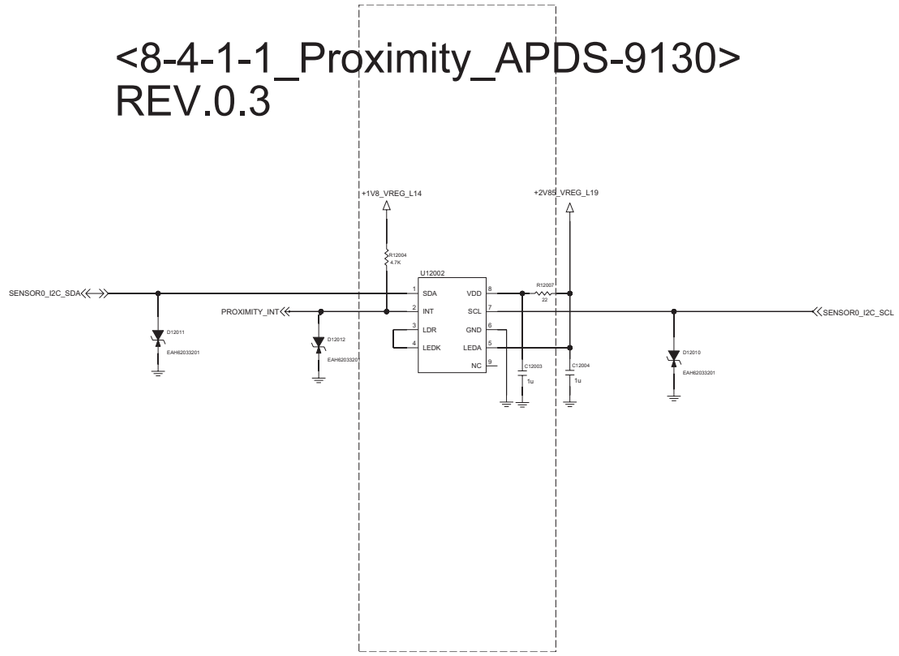

<8-7-1-1_Hall IC_BU52061NVX> Rev_0.3

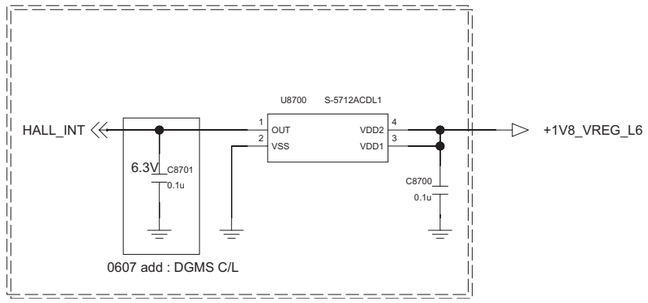

<9-1-2_Battery_CNT_4P> REV.0.4

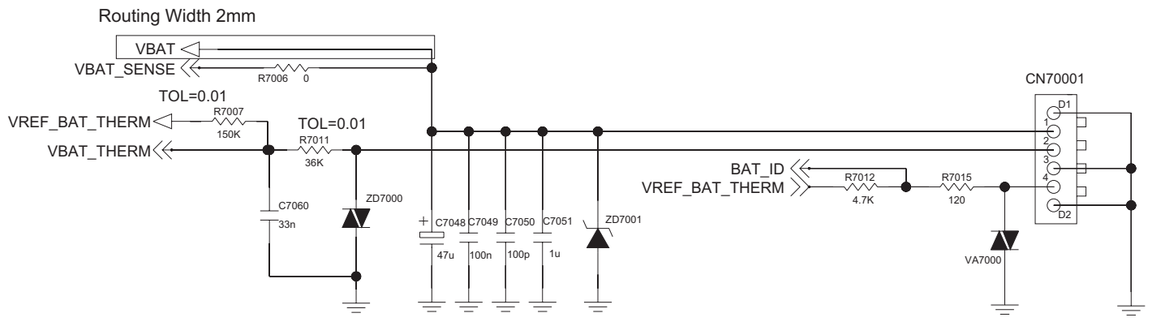

Copyright © 2014 LG Electronics. Inc. All right reserved.
Only for training and service purposes

EMBY0053201
same as all W/X series

< 9-3-1_JTAG >
Rev_0.4

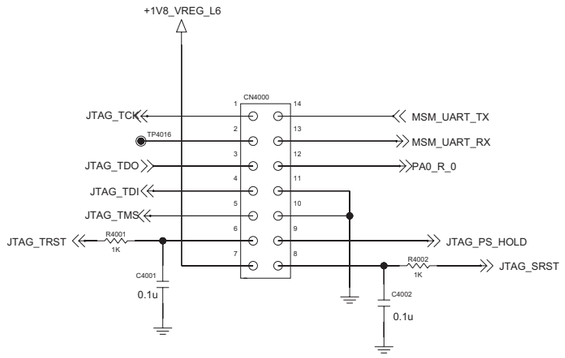

<9-5-1-1_Single_SIM_6P> REV.0.3
<9-5-1-2_Dual_SIM_Socket_12P> REV.0.3

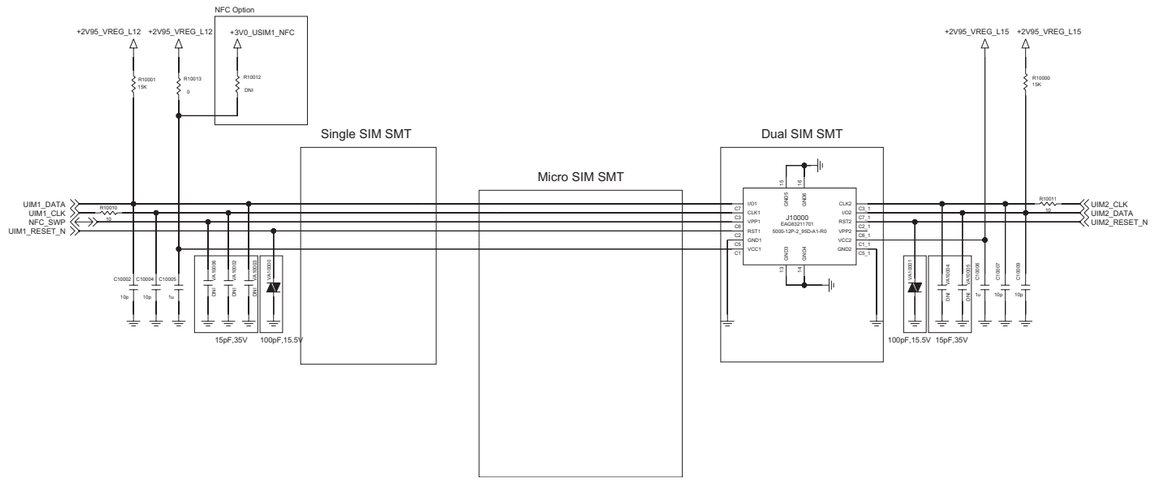

Copyright © 2014 LG Electronics. Inc. All right reserved.
Only for training and service purposes

< 9-7-1_Power_Lock_Volume_Key > Rev_0.4

POWER & LOCK KEY

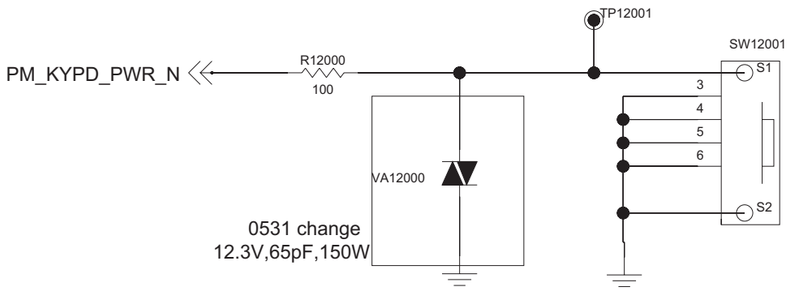

Vol. UP/DOWN

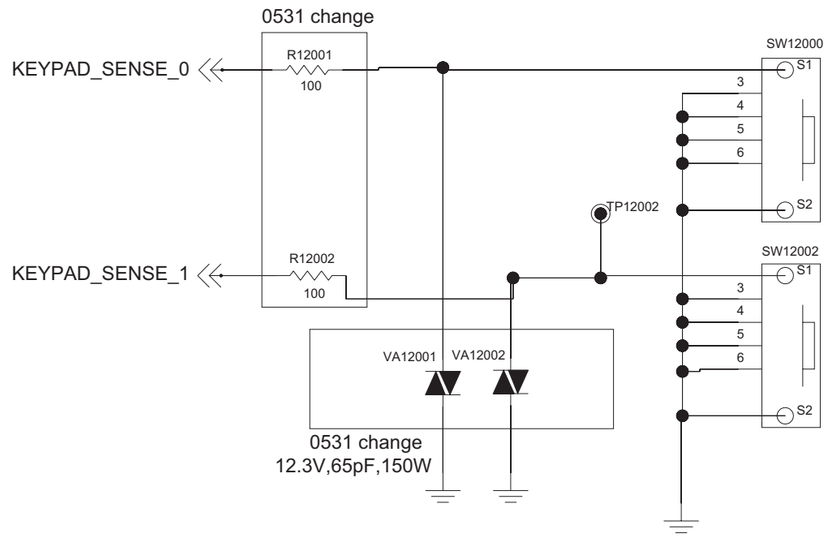

Copyright © 2014 LG Electronics. Inc. All right reserved.
Only for training and service purposes

<9-6-1_Socket_Micro_SD>
Rev_0.3

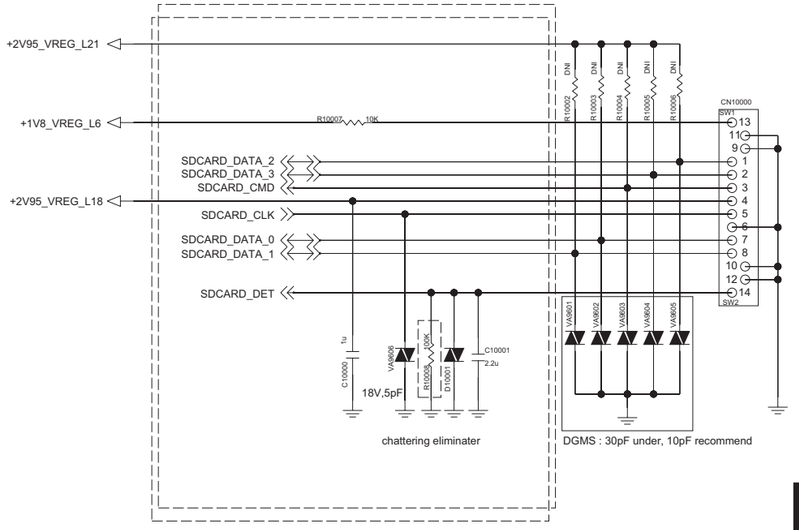

Card Detect	SW1 SW2	SD_CARD_DET
Card Installed		1.8V
Card Not Installed		GND

MAIN-TO-lower FPCB CONNECTOR

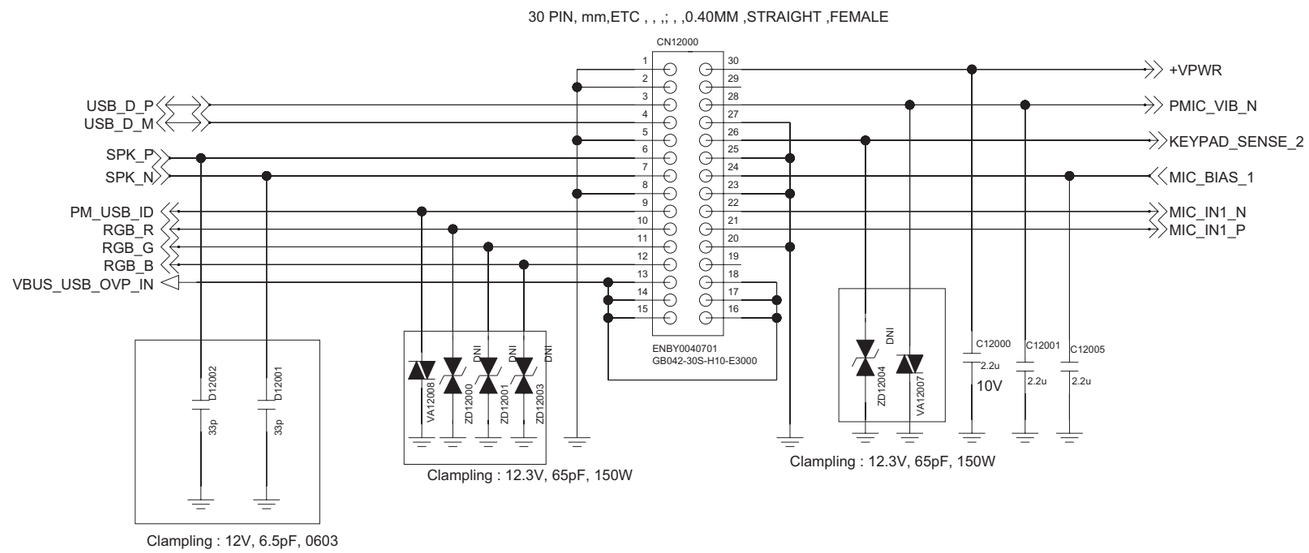

Copyright © 2014 LG Electronics. Inc. All right reserved.
Only for training and service purposes

< W5 Dual Lower FPCB >

FPCB_LOWER_ CONNECTOR

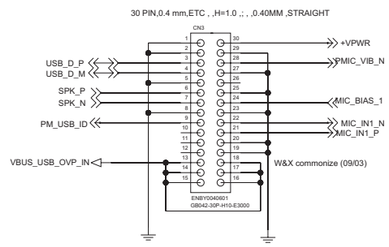

ANT1_PAD

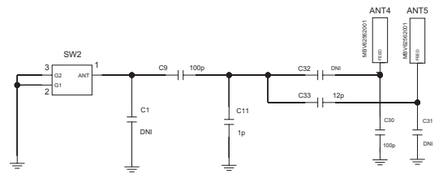

5PIN_MICRO_USB

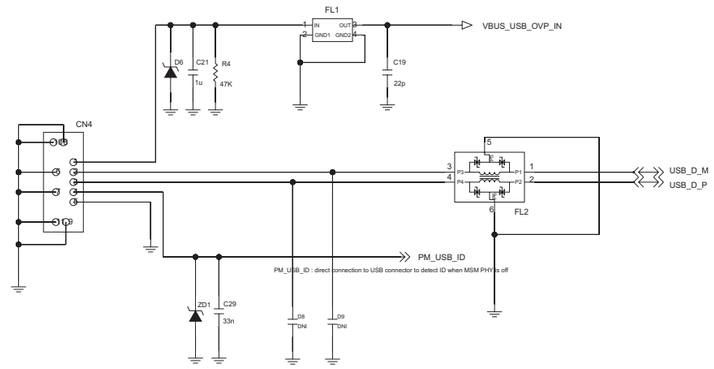

MOTOR

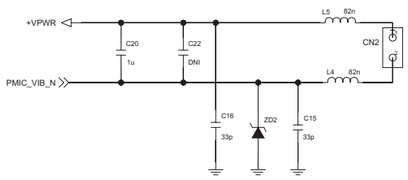

MAIN_MIC

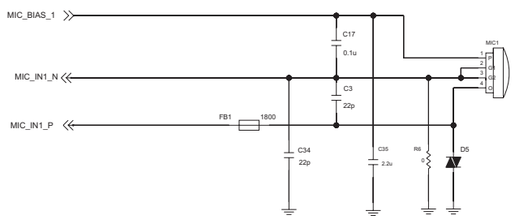

SPEAKER

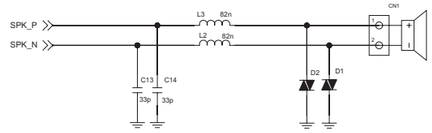

Copyright © 2014 LG Electronics. Inc. All right reserved.
Only for training and service purposes

7. BGA PIN MAP

U3000 WTR2605

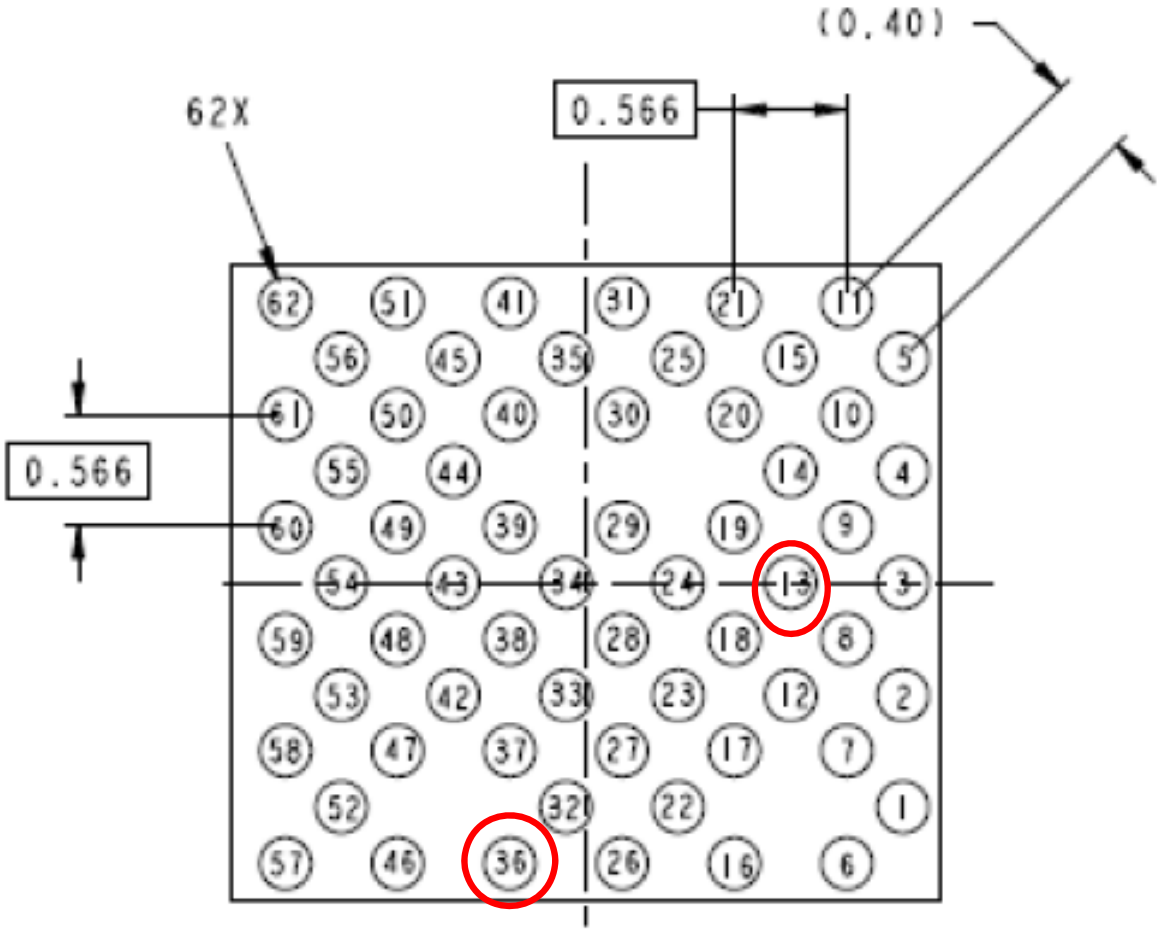

Not Used

Copyright © 2014 LG Electronics. Inc. All right reserved.
Only for training and service purposes

U4100 PM8110

	1 VDD _L6_7 8 9 14		2 XTAL_ 19M_IN		3 VREG _RFCLK		4 VREG _L10		5 VREG _L18		6 VREG _L3		7 VREG _L21		8 VDD _L16_19 20 21
9 VDD _L6_7 8 9 14		10 VREG _L7		11 XTAL_ 19M_OUT		12 VDD _L10_11 13		13 VDD _L12_15_ 17 18 22		14 VREG _L4		15 VDD _L1_2_ 3 4 5		16 VREG _L19	
	17 VDD _L6_7 8 9 14		18 VREG _L8		19 VREG _XO		20 BB_ CLK		21 VREG _L22		22 VDD _L1_2_ 3 4 5		23 VREG _L20		24 VDD _L16_19 20 21
25 VREG _L14		26 REF _BYP		27 VREG _L15		28 RF_ CLK2		29 VREG _L17		30 VREG _L5		31 VREG _L1		32 VREG _L16	
	33 VREG _L9		34 GND _REF				35 VREG _L12				36 VREG _L2		37 VSW _S1		38 VDD _S1
39 GND _S4		40 VREG _L6		41 RF_ CLK1						42 GND _XO		43 VREG _S1		44 VSW _S1	
	45 VSW _S4		46 BB_ CLK_EN		47 XO_ THERM				48 GND _RF		49 AVDD _BYP		50 GND _S1		51 GND _S1
52 VDD _S4		53 VREG _S4		54 SLEEP _CLK				55 GND		56 GND		57 RESIN _N		58 VIB_ DRV_N	
	59 VCOIN		60 MPP _04		61 GND		62 GND_ XOADC		63 GND				64 GND _DRV		65 VDD _S2
66 VDD _S3		67 VSW _S3		68 MPP _03				69 GND		70 GND		71 SPMI _DATA		72 VSW _S2	
	73 VSW _S3		74 VREG _S3						75 GND		76 SPMI _CLK		77 VSW _S2		78 GND _S2
79 GND _S3		80 VBAT _SNS		81 GPIO _02		82 MPP _01		83 VREG _IADC		84 PS_ HOLD		85 VREG _S2		86 GND _S2	
	87 VBAT		88 GPIO _04		89 GPIO _03		90 GPIO _01		91 MPP _02		92 PON_ RST_N		93 VREF _LPDDR		94 VREF_ NEG_S2
95 VBAT		96 VBAT		97 BAT_ THERM		98 USB _IN		99 VSW _CHG		100 HW_ID		101 KPD_ PWR_N		102 ATC_ SINK	
	103 VPH _PWR		104 VPH _PWR		105 BAT _ID		106 VCHG		107 GND_ CHG_HP		108 VREF_ BAT_THM		109 GND _CHG		110 GND
111 BATFET _CP_DRV		112 VPH _PWR		113 VPRE _BYP		114 USB _IN		115 VSW _CHG		116 GND_ CHG_HP		117 VDRV_P		118 NC	

INPUT PWR MGT | OUTPUT PWR MGT | GEN HK | USER I/F | IC I/F | GPIO or MPP | Power | Ground

Not Used

Copyright © 2014 LG Electronics. Inc. All right reserved.
Only for training and service purposes

U2100 MSM8210

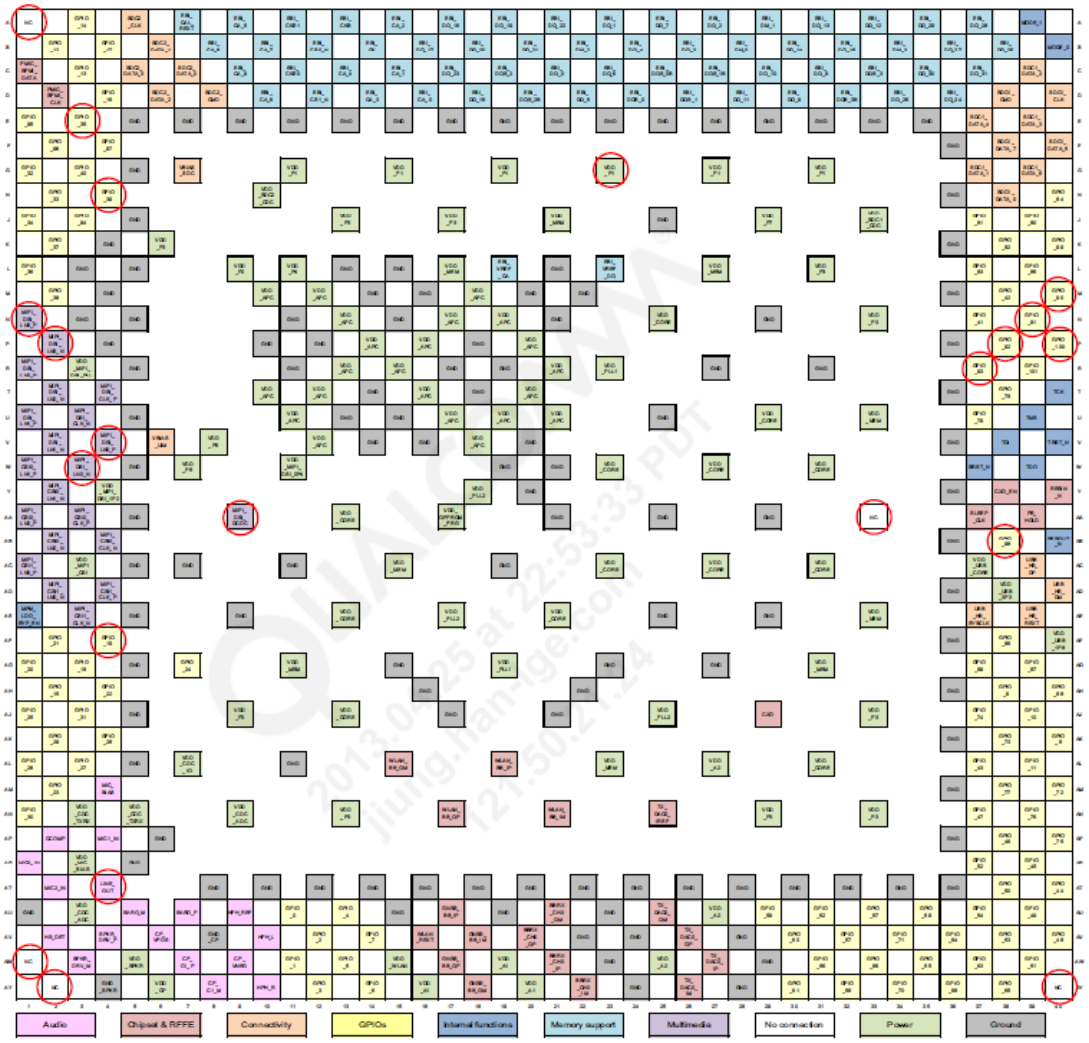

Not Used

Copyright © 2014 LG Electronics. Inc. All right reserved.
Only for training and service purposes

U5100 WCN3620

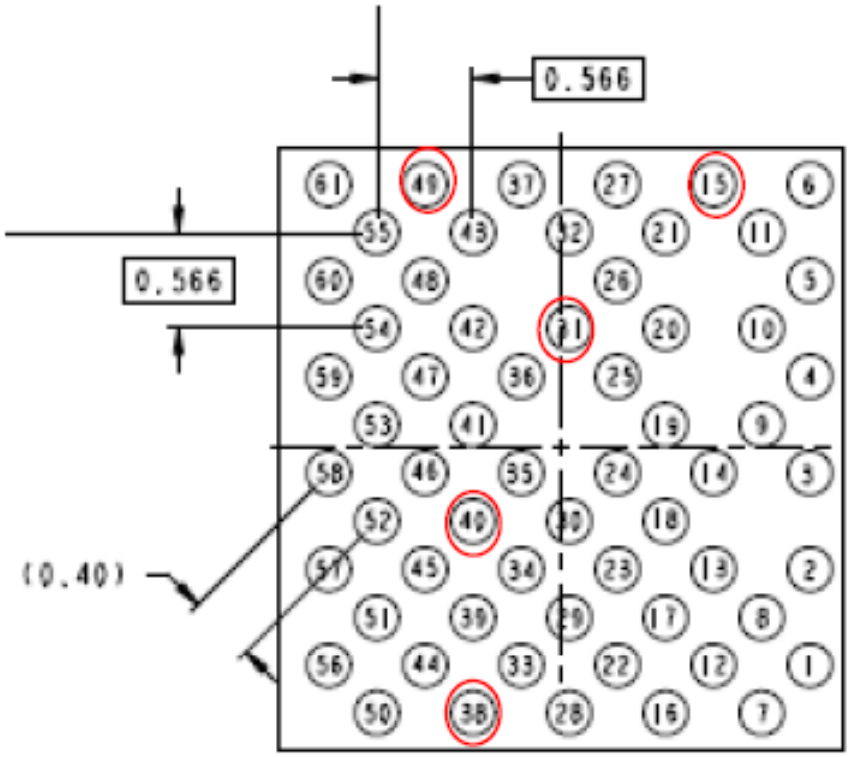

Not Used

Copyright © 2014 LG Electronics. Inc. All right reserved.
Only for training and service purposes

U6000 H9TP32A8JDBCPR-KGM

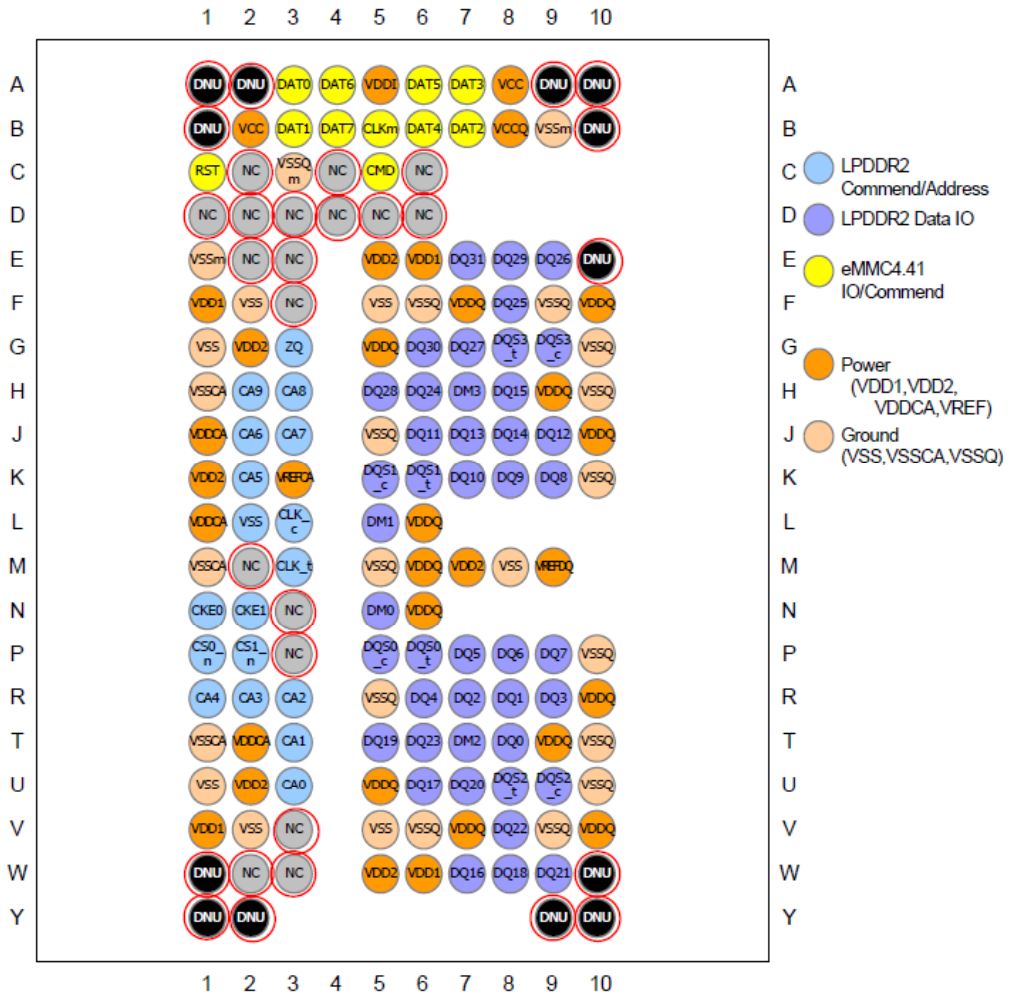

Not Used

Copyright © 2014 LG Electronics. Inc. All right reserved.
Only for training and service purposes

U8001 RT8542

(TOP VIEW)

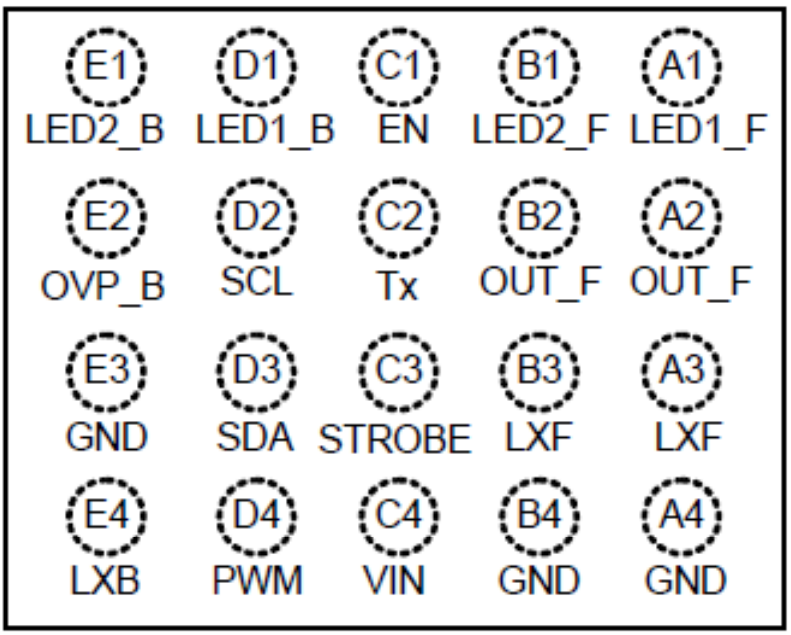

WL-CSP-20B 1.85x2.35 (BSC)

ALL USED PIN

Copyright © 2014 LG Electronics. Inc. All right reserved.
Only for training and service purposes

8. PCB LAYOUT

Model name : S17OT423-001(MIC9000)
Function : MIC
- no voice sound

Model name : MMS-134S (U7200)
Function : Touch Sensor
- no Touch

Model name : WCN3620 (U5100)
Function : WIFI & BT
- no WiFi & BT

Model name : SKY77742-21 (U2002)
Function : 3G PAM
- no Service

Model name : SKY77573-31 (U1000)
Function : TX Module
- no Service

Model name : WTR2605 (U3000)
Function : RF transceiver
- no Booting,
- no Service

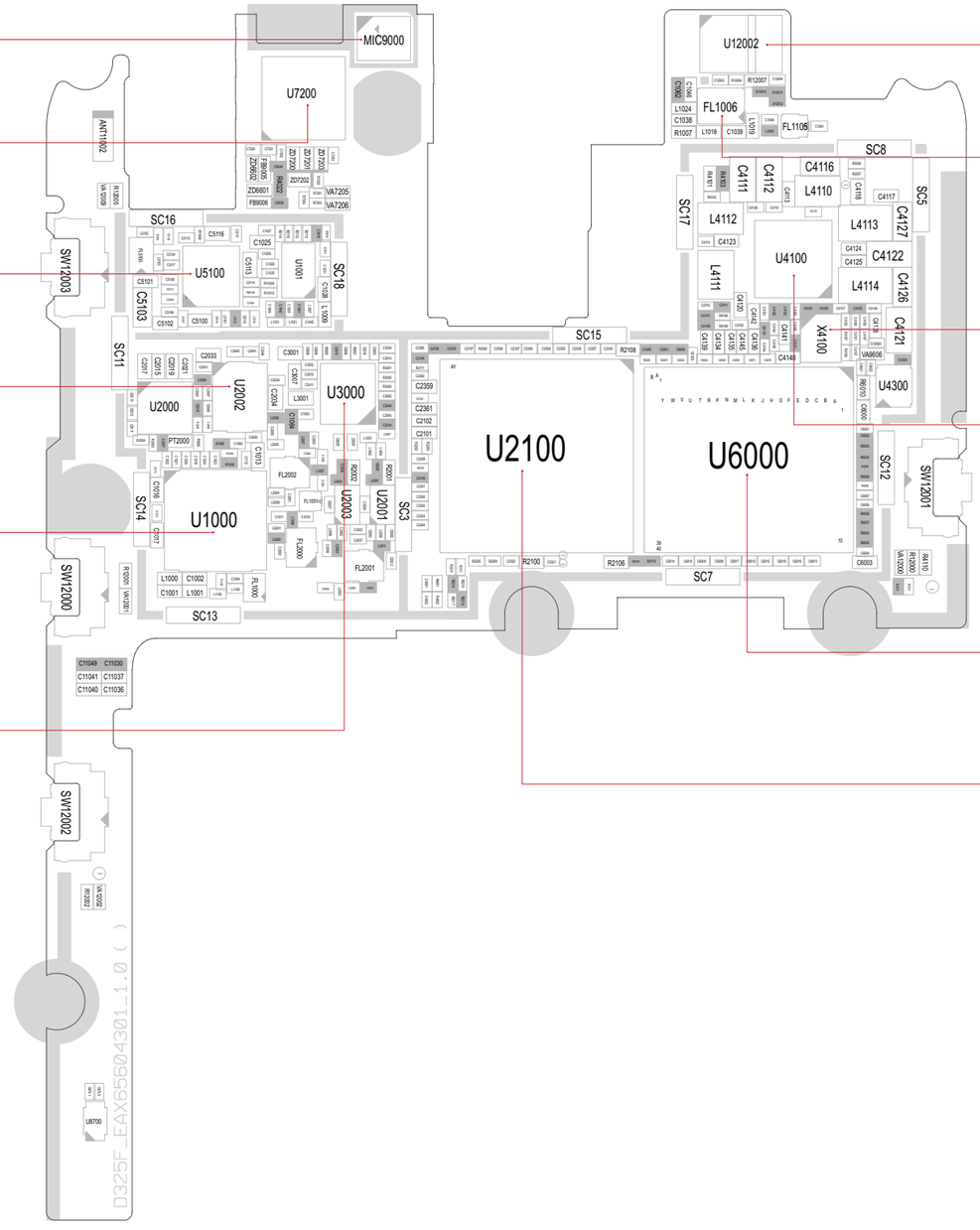

Model name : APDS-9130-200 (U12002)
Function : Proximity sensor
- no proximity

Model name : SFMG2BAD001 (FL1006)
Function : GPS
- no GPS

Model name : 1RAA19200AAA (X4100)
Function : 19.2MHz Clock
- no booting,
- no RF

Model name : PM8110(U4100)
Function : PMIC
- no booting
- no touch
- no camera
- no LCD
- no RF

Model name : H9TP32A8JDBCPR-KGM(U6000)
Function : Memory
- no Booting

Model name : MSM8210 (U2100)
Function : Baseband
- no booting
- no function

LG-D325_MAIN_EAX65604301_1.0_TOP

Copyright © 2014 LG Electronics. Inc. All right reserved.
Only for training and service purposes

Model name : CN9000
Function : Receiver
- no sound

Model name : CN8002
Function : VT camera
- no VT Camera

Model name : CN1001
Function : GPS Antenna
- no GPS

Model name : LD8000
Function : Flash LED
- no Flash

Model name : CN10000
Function : SD socket
- no sd card detect

Model name : BMC150 (U12001)
Function : 3 axis
- no 3 axis sensor

Model name : CN70001
Function : Battery connector
- no boot,
- no charging

Model name : RT8542 (U8001)
Function : DC/DC Converter
- no LCD
- no flash

Model name : CN8001
Function : camera
- no 5M Camera

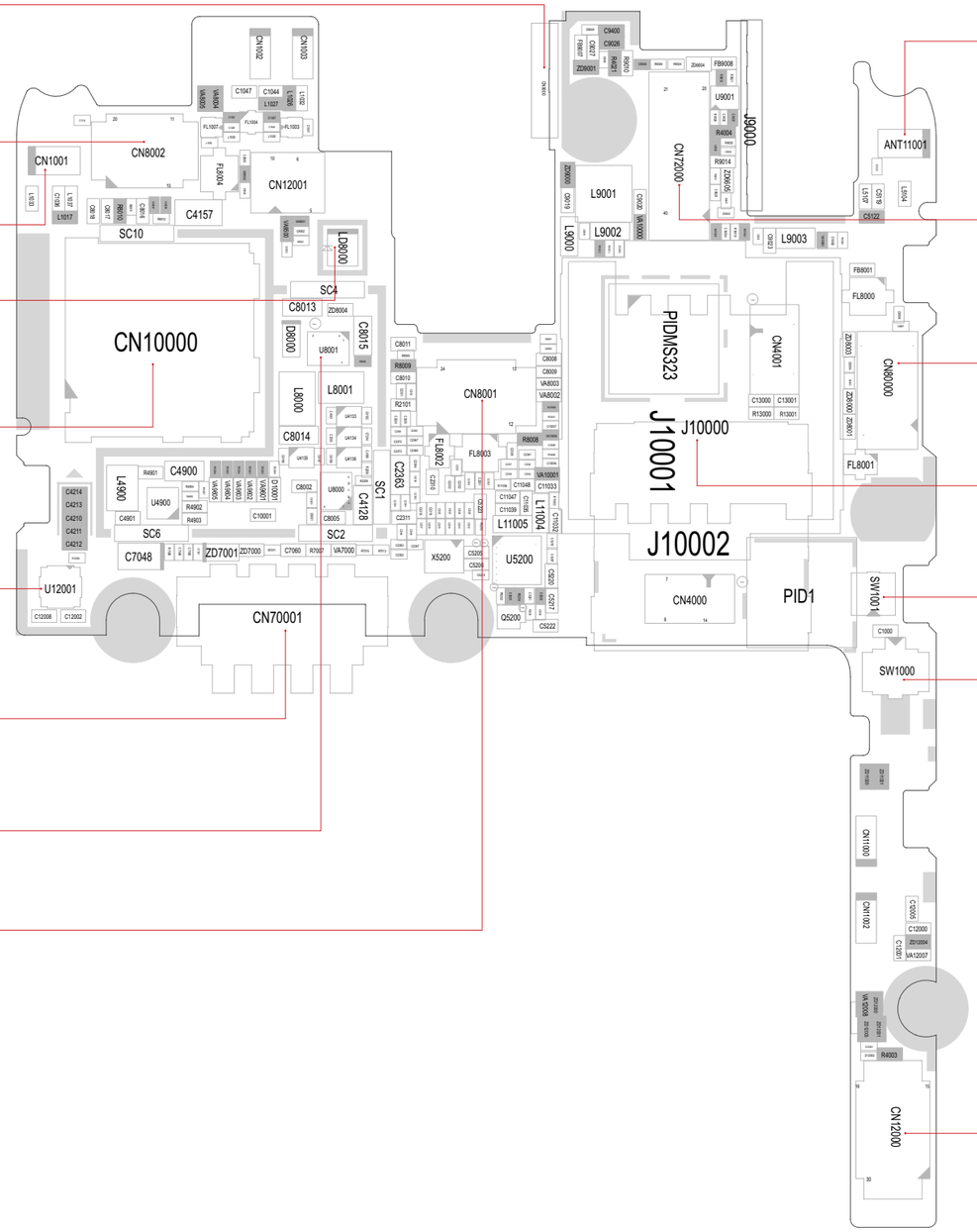

Model name : ANT11001
Function : WIFI & BT Antenna
- no WiFi & BT

Model name : CN72000
Function : Touch
- no Touch

Model name : CN80000
Function : LCD
- no LCD

Model name : J10000
Function : SIM
- no SIM detect

Model name : SW1001
Function : RF TEST
- no Connect with equipment for call

Model name : SW1000
Function : RF CABLE connector
- no RF

Model name : CN12000
Function : SUB FPCB connector
- no speaker
- no Download
- no voice
- no Motor

LG-D325_MAIN_EAX65604301_1.0_BOT

Copyright © 2014 LG Electronics. Inc. All right reserved.
Only for training and service purposes

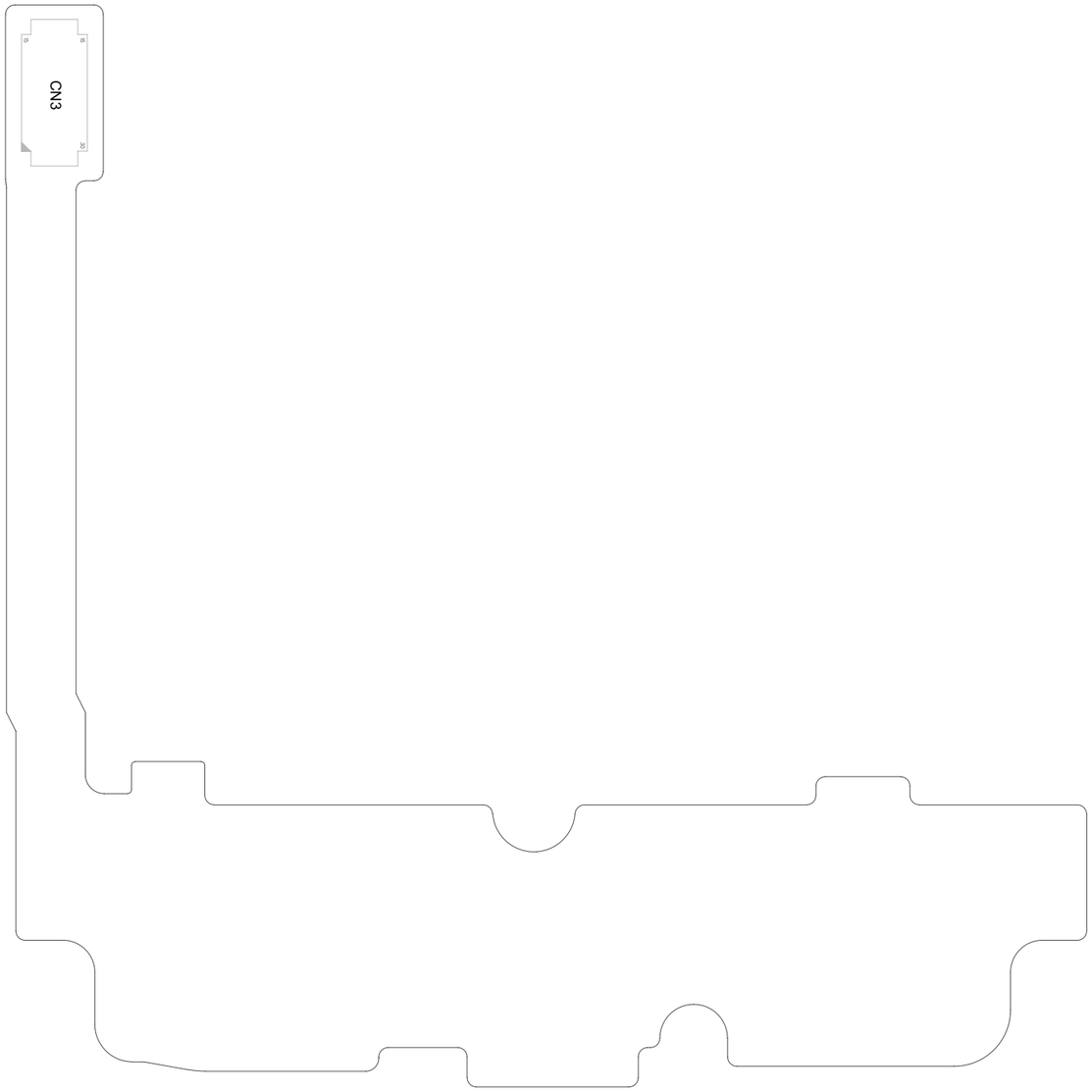

LG-D325_F_LOWER_EAX65608401_1.0_BOT

Copyright © 2014 LG Electronics. Inc. All right reserved.
Only for training and service purposes

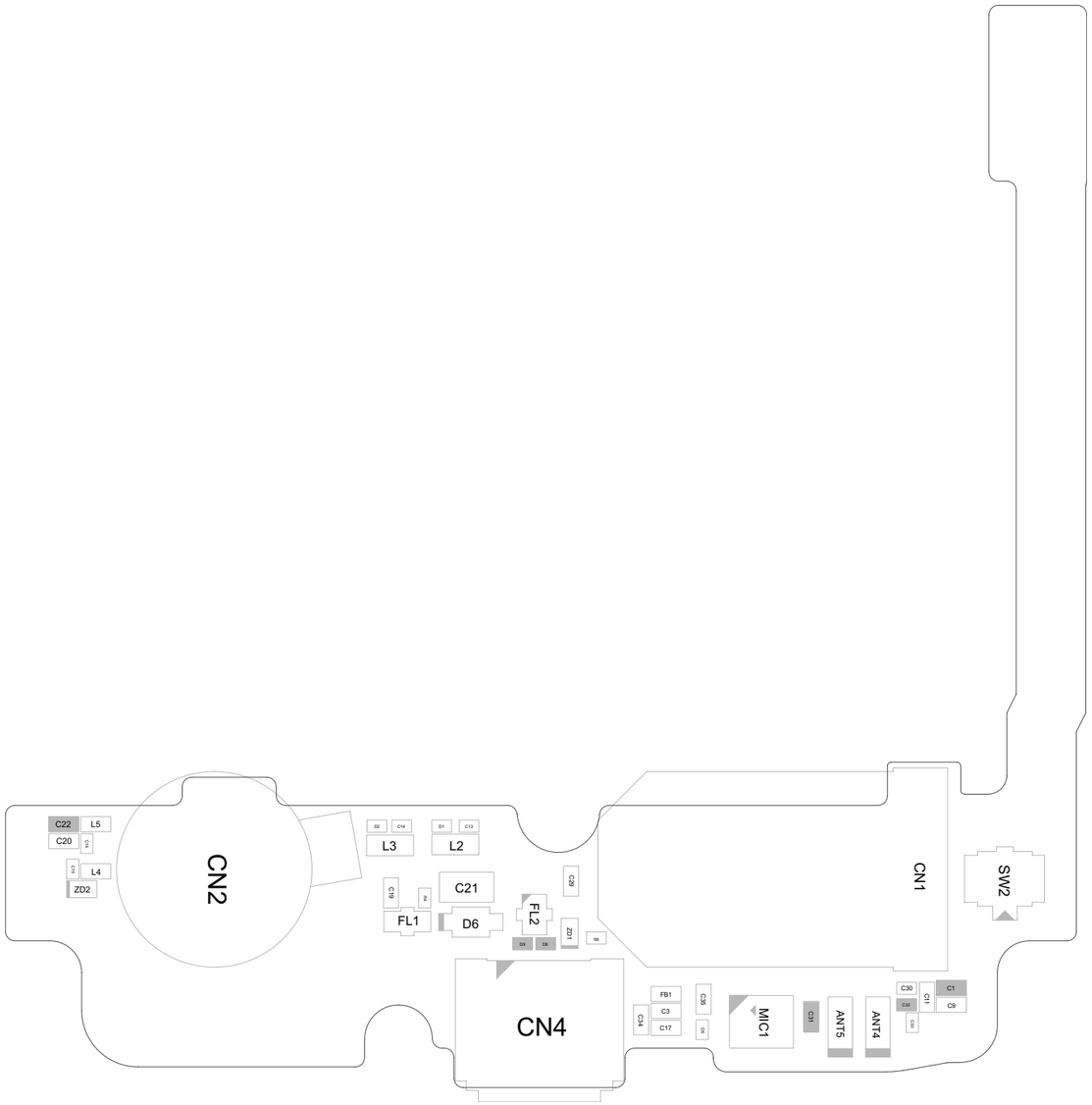

LG-D325_F_LOWER_EAX65608401_1.0_BOT

Copyright © 2014 LG Electronics. Inc. All right reserved.
Only for training and service purposes

9. CALIBRATION

CAL INFORMATION		
S/W VERSION		
[TachyonV48] LGD325 20140226 ALL File Calibration		
Please Check the Version to "B2B"		
H/W		
	Name	**Part No.**
PIF	PIF200(All Type)	BJAY0024021
USB Cable	USB Cable	RAD32247898
Power Cable	DC Power Cable	RAD32247878
I/O Cable	5P E-SATA_DC_Plug	RAD32167861
RF Cable_Main	MS-156C	BJAY0024004
Power Supply_PIF	Power Supply 5.3V	
Power Supply_Phone	Power Supply 5.0V	
RF Test Equipment	E5515C(8960)	
NOTICE	1. Use the dummy Battery (Refer to Attached image) 1) Phone states: Power off 2) If do not use the dummy battery, GSM TX fails. 2. Port Setting (Refer to Attached image) 1) Uart Port2 : Use the "LGE CDMA USB Serial Port"	

Copyright © 2014 LG Electronics. Inc. All right reserved.
Only for training and service purposes

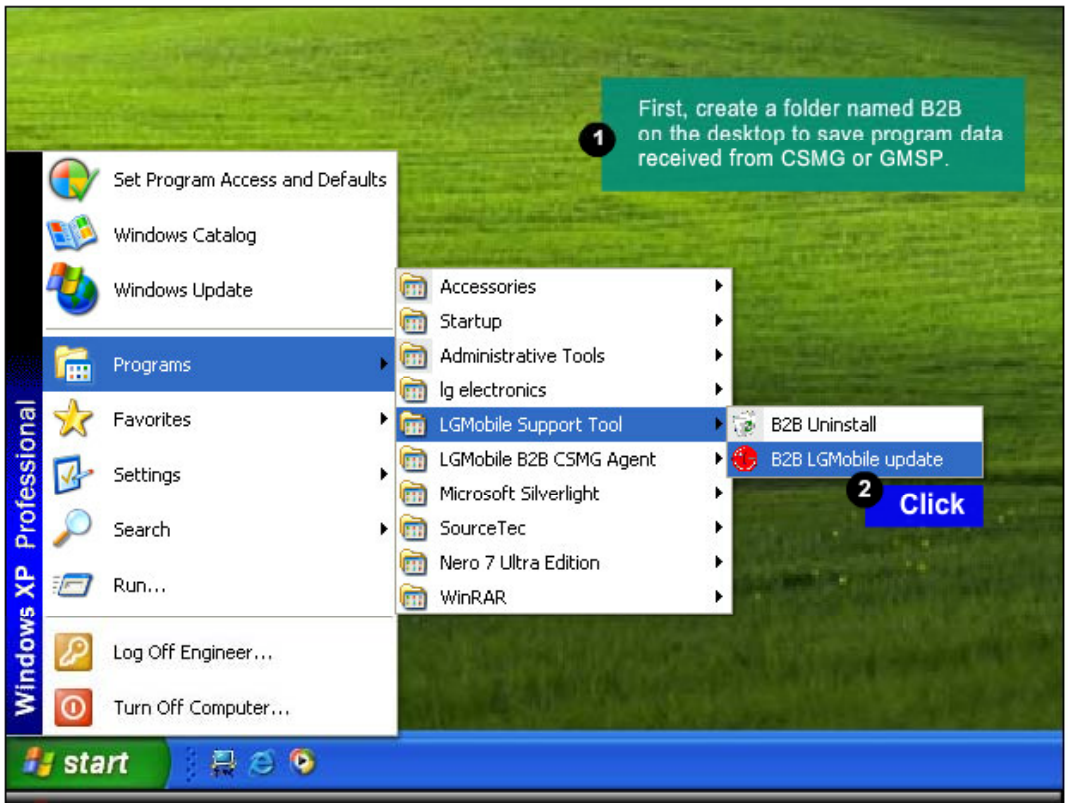

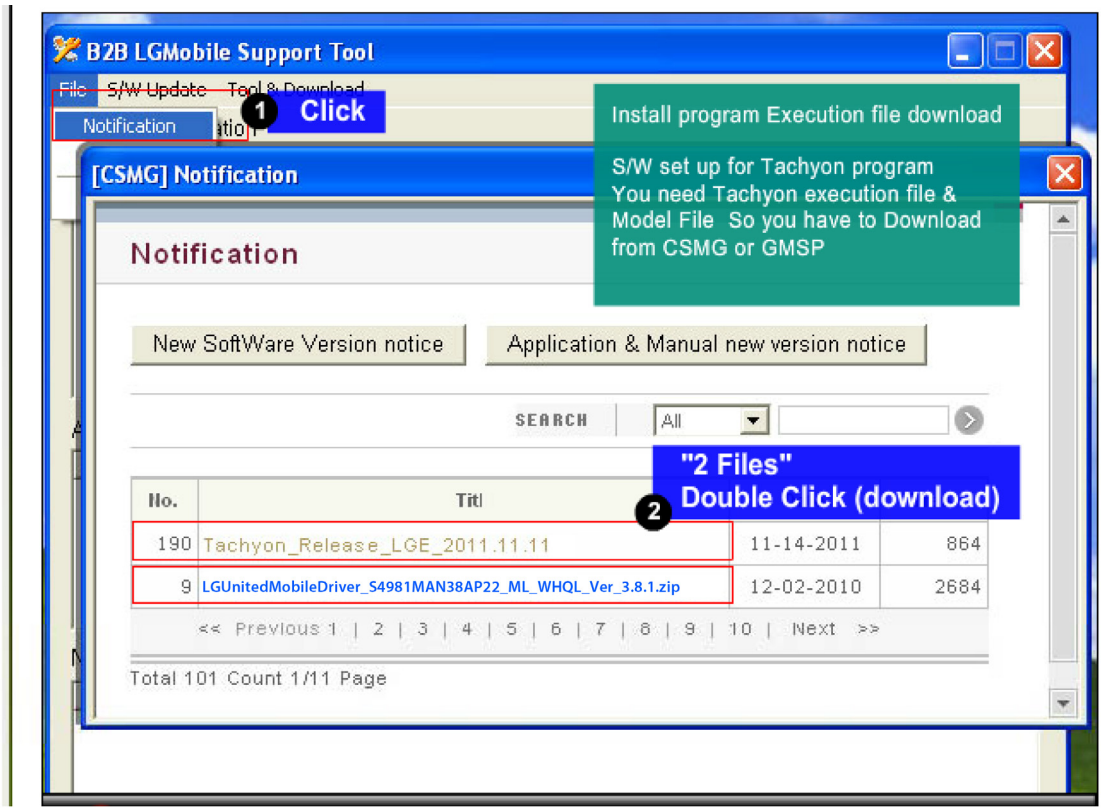

Copyright © 2014 LG Electronics. Inc. All right reserved.
Only for training and service purposes

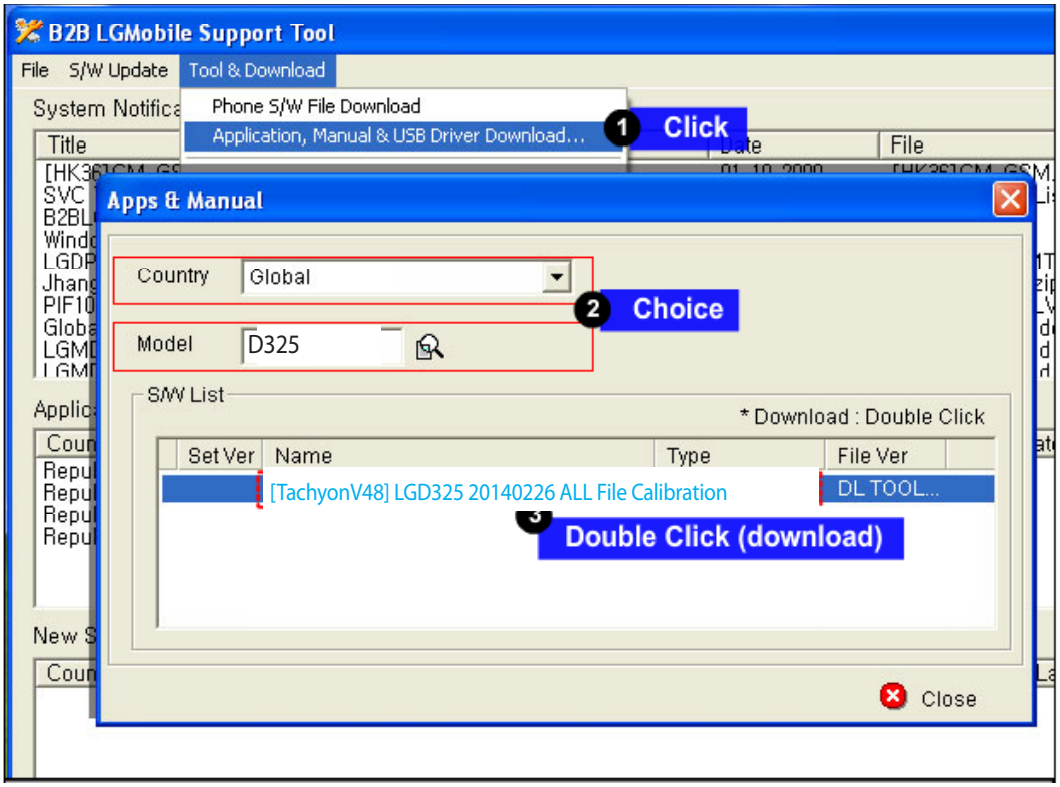

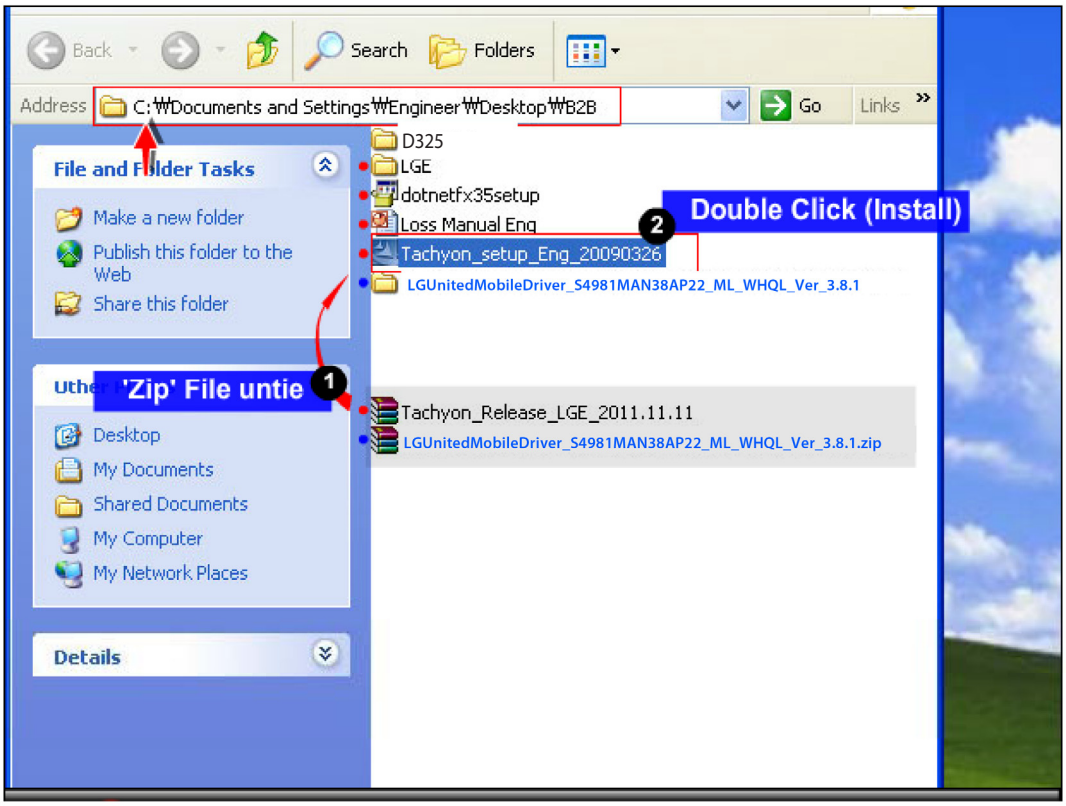

Copyright © 2014 LG Electronics. Inc. All right reserved.
Only for training and service purposes

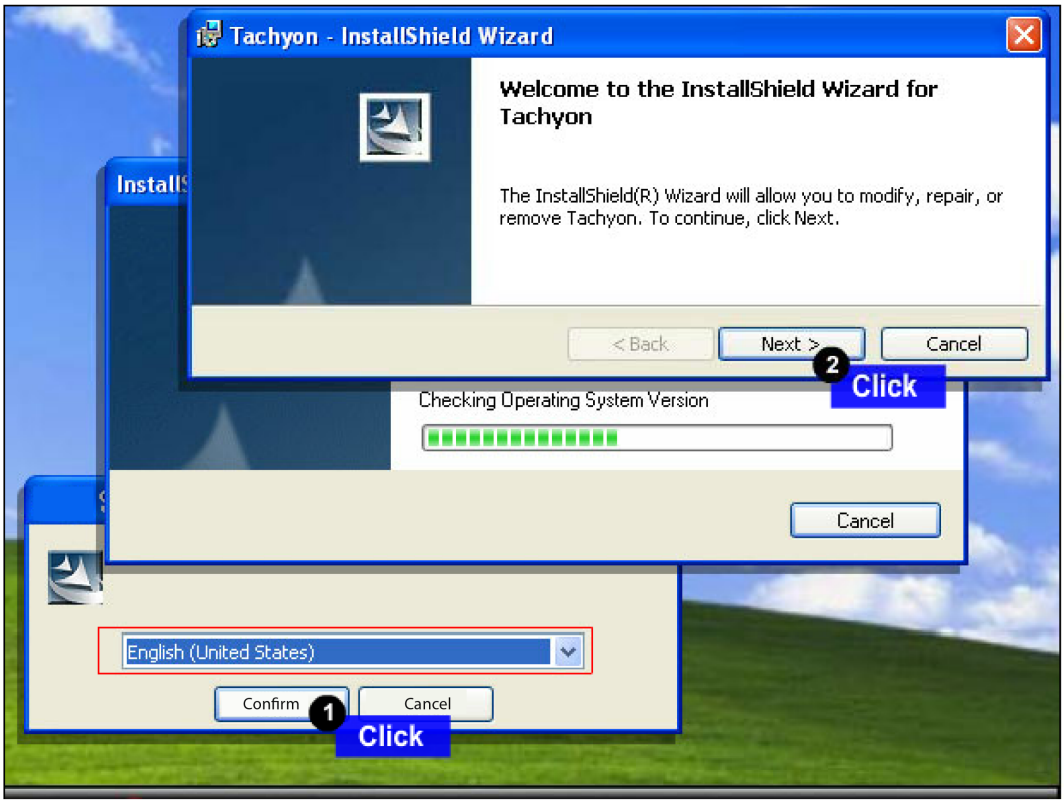

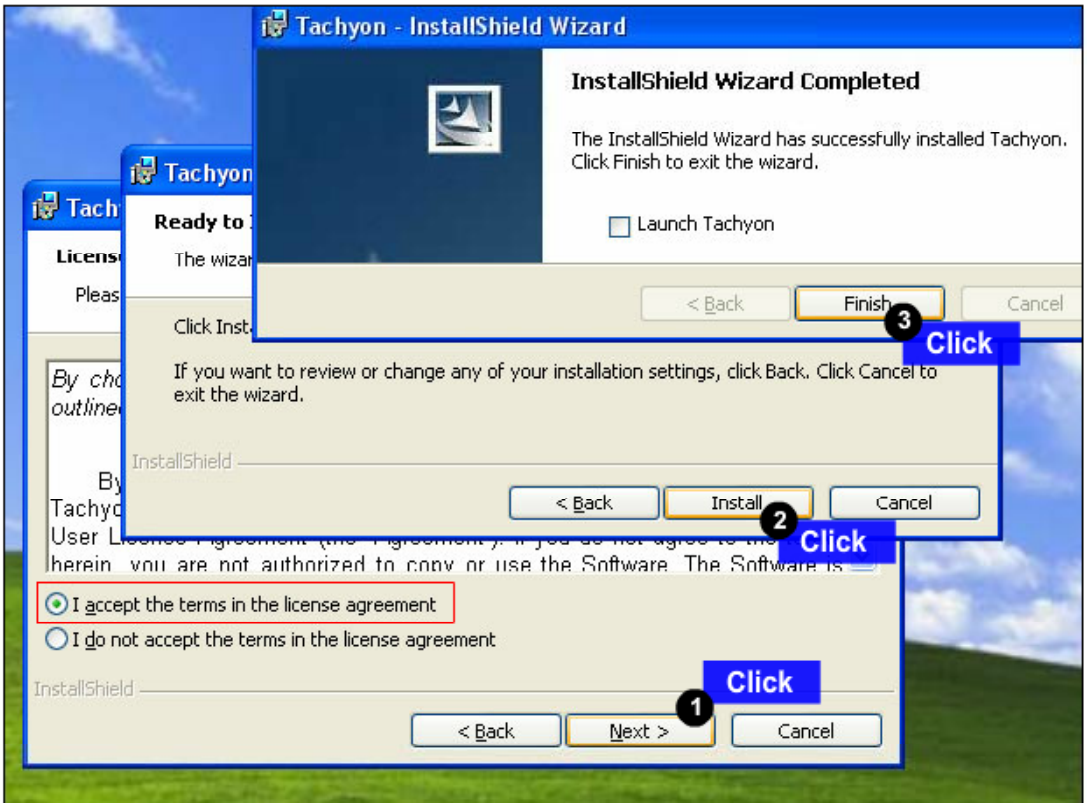

Copyright © 2014 LG Electronics. Inc. All right reserved.
Only for training and service purposes

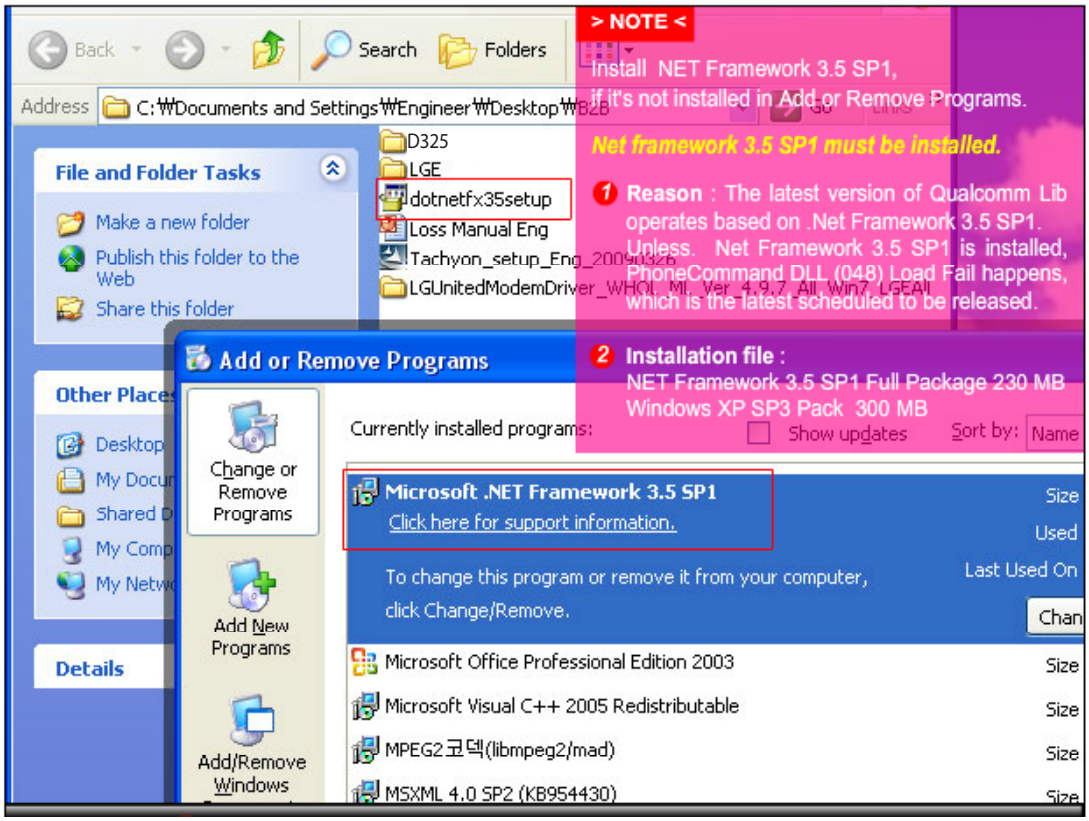

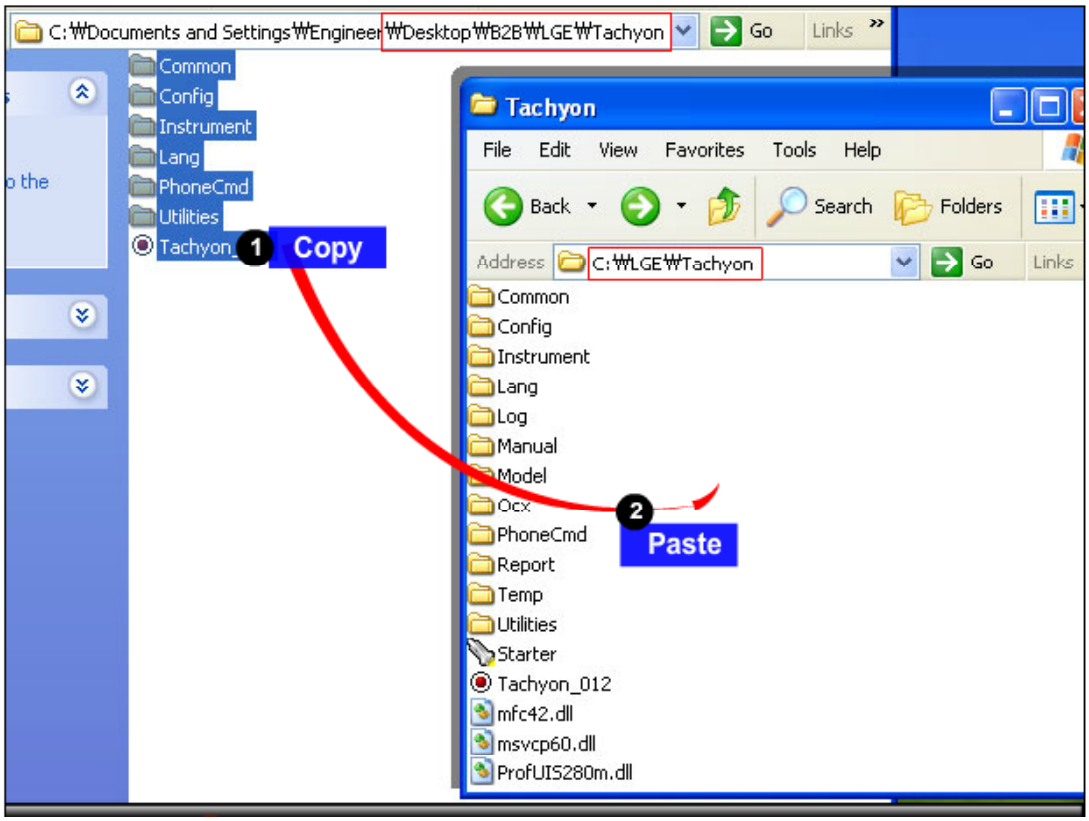

Copyright © 2014 LG Electronics. Inc. All right reserved.
Only for training and service purposes

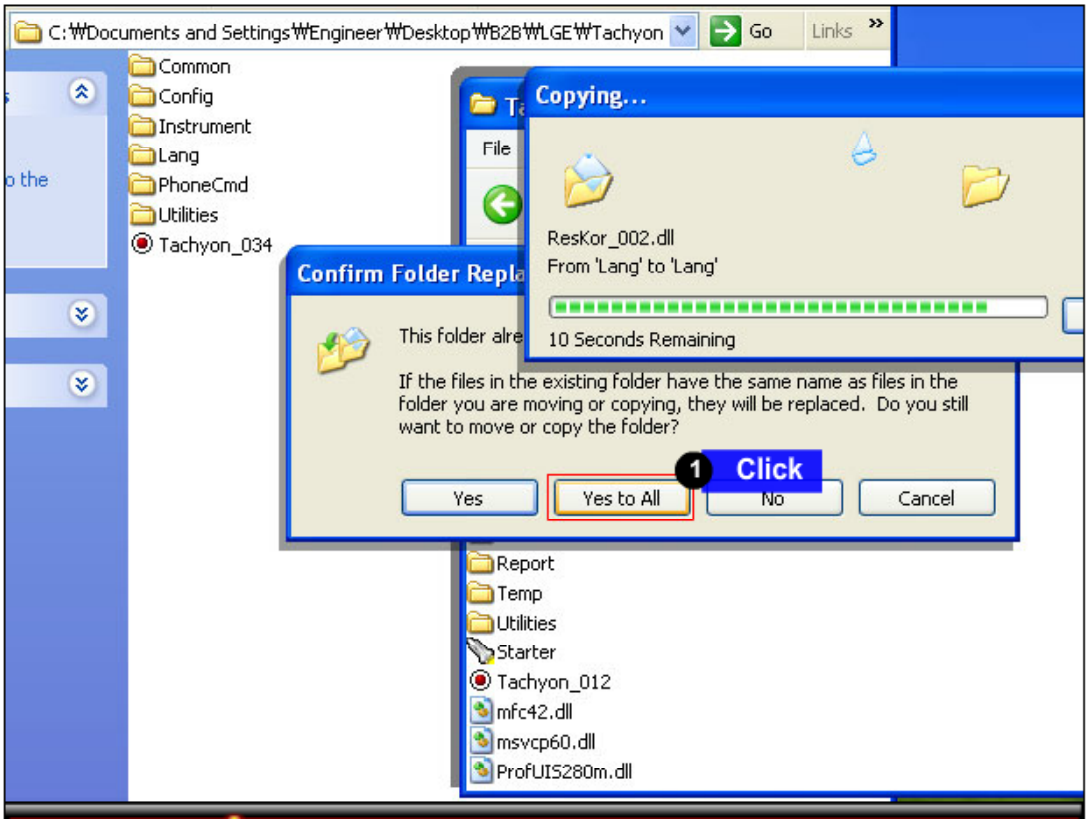

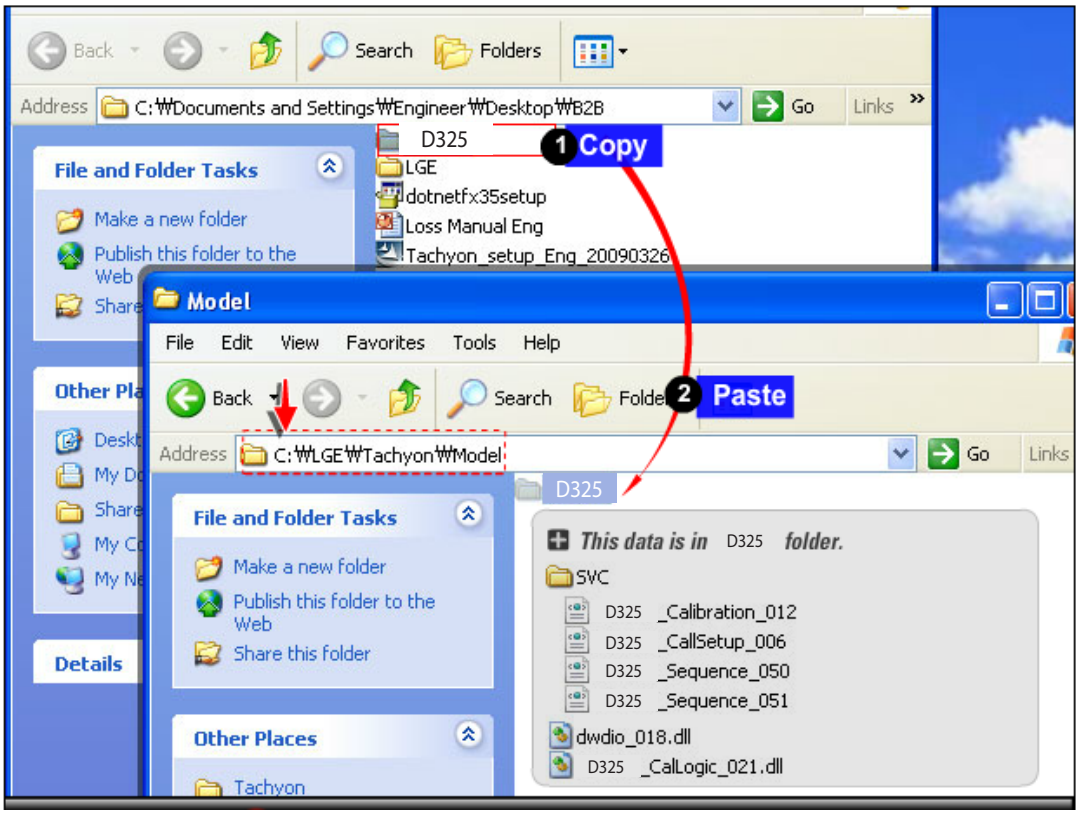

Copyright © 2014 LG Electronics. Inc. All right reserved.
Only for training and service purposes

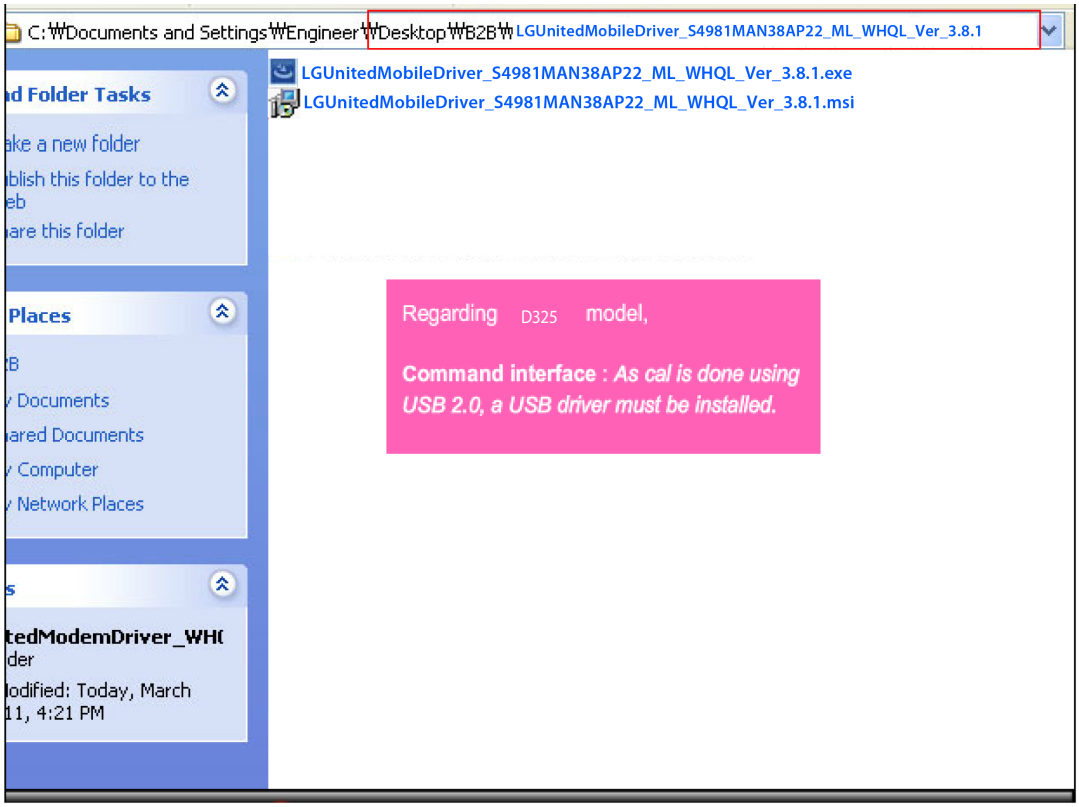

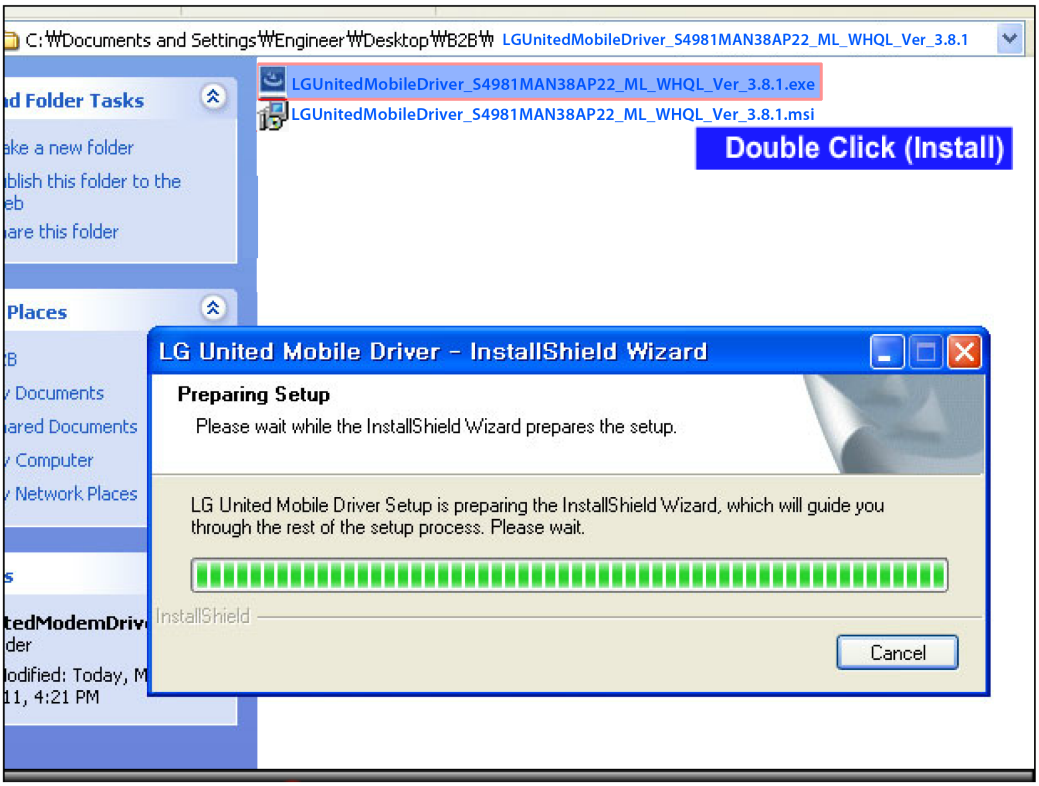

Copyright © 2014 LG Electronics. Inc. All right reserved.
Only for training and service purposes

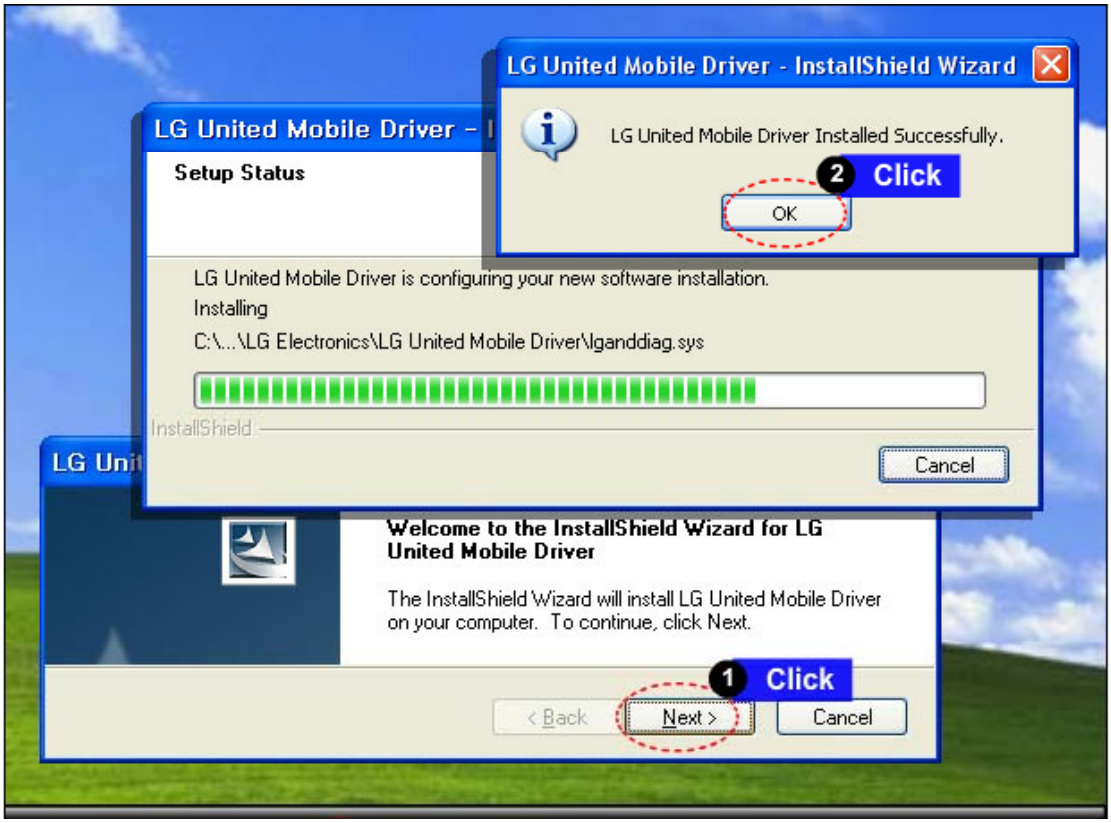

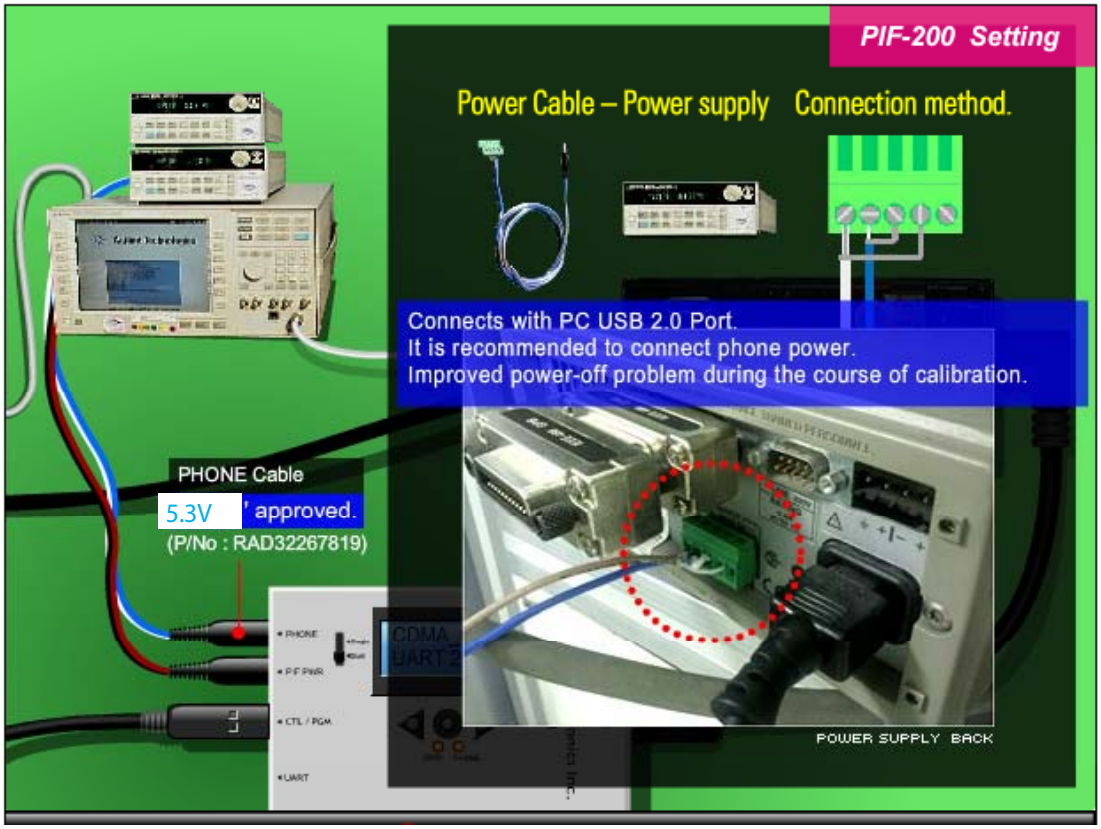

Copyright © 2014 LG Electronics. Inc. All right reserved.
Only for training and service purposes

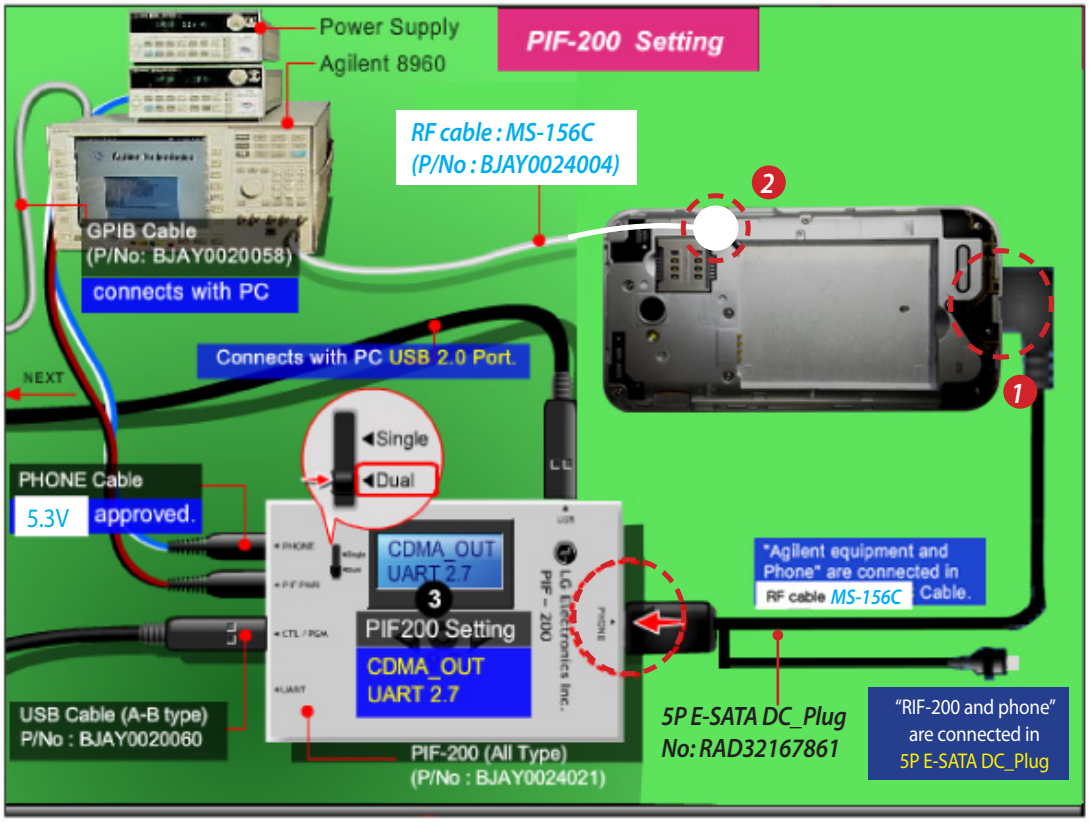

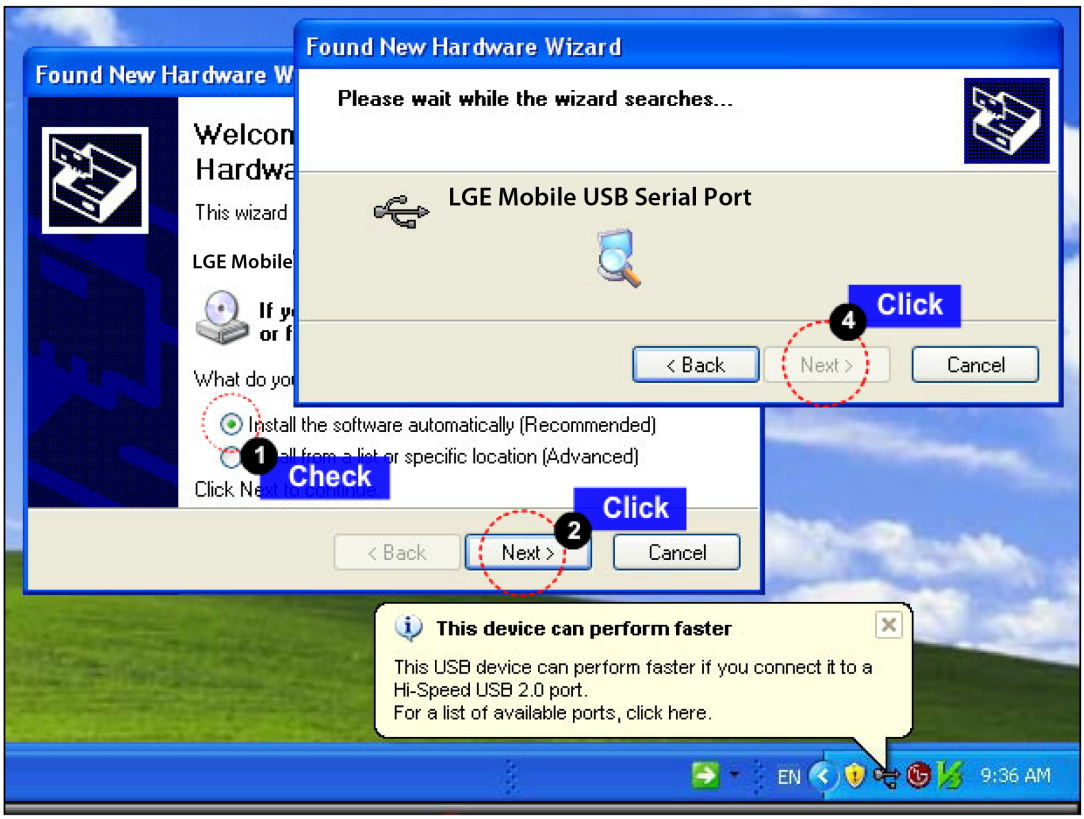

Copyright © 2014 LG Electronics. Inc. All right reserved.
Only for training and service purposes

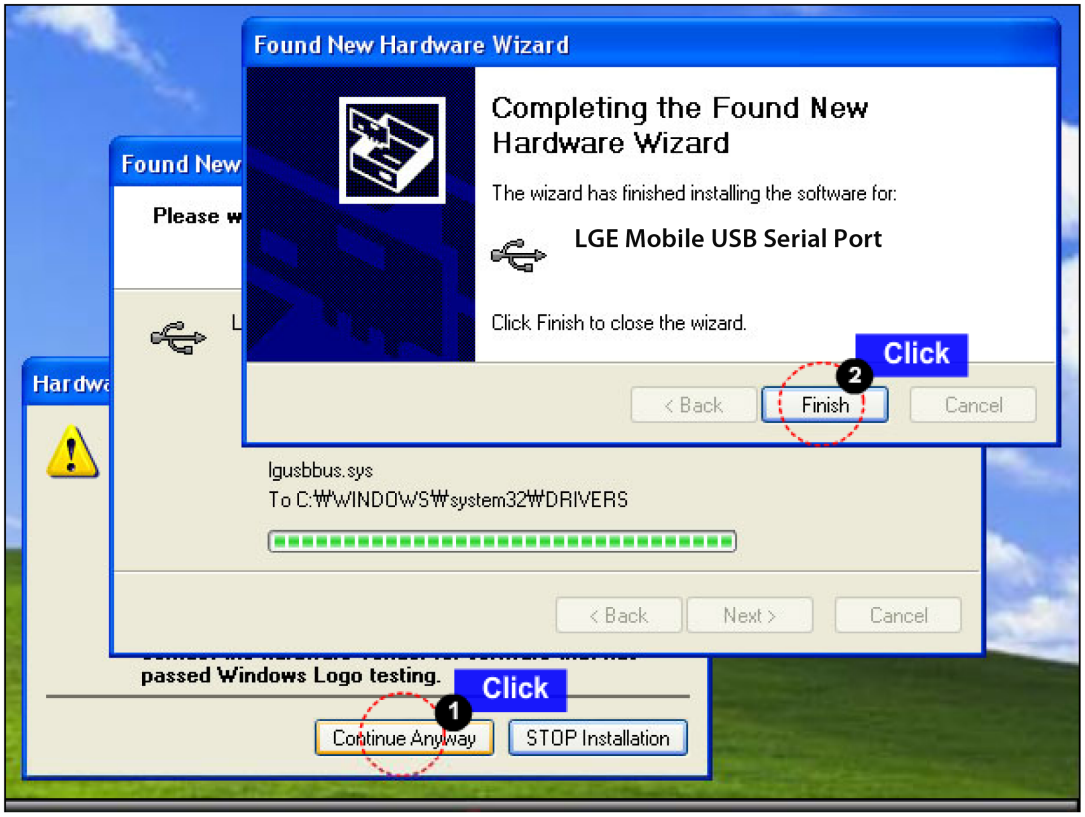

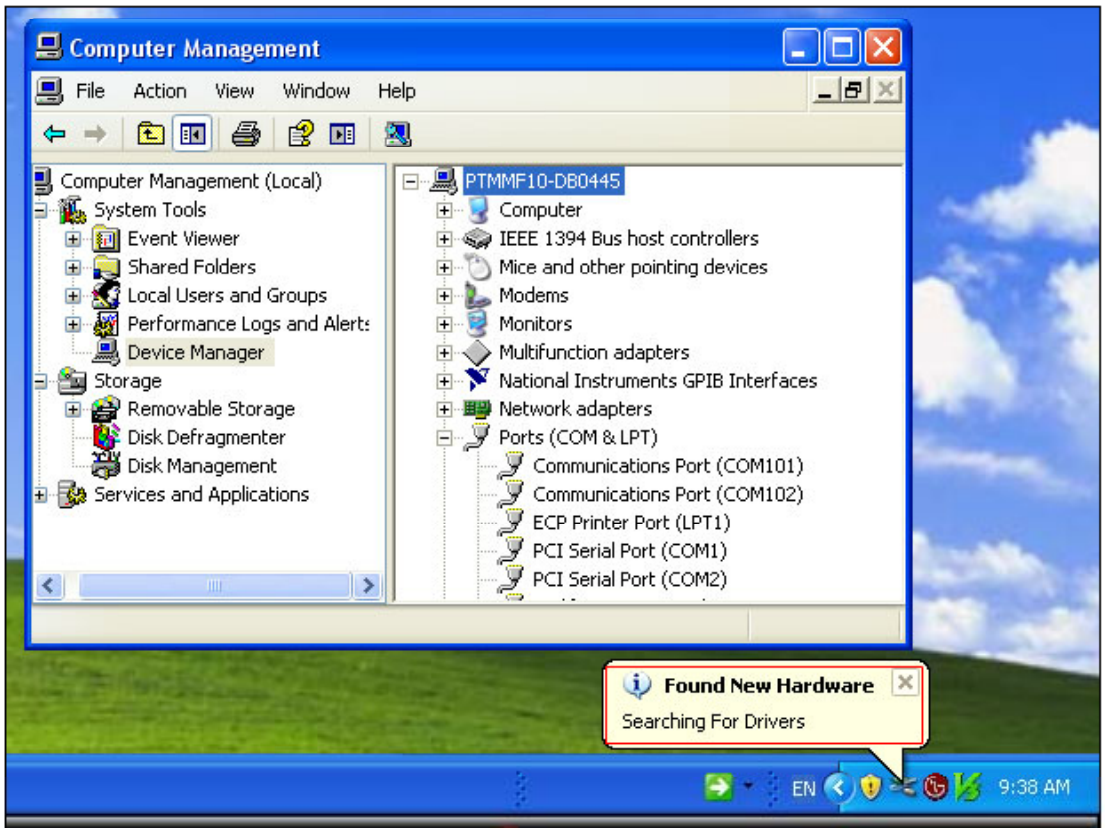

Copyright © 2014 LG Electronics. Inc. All right reserved.
Only for training and service purposes

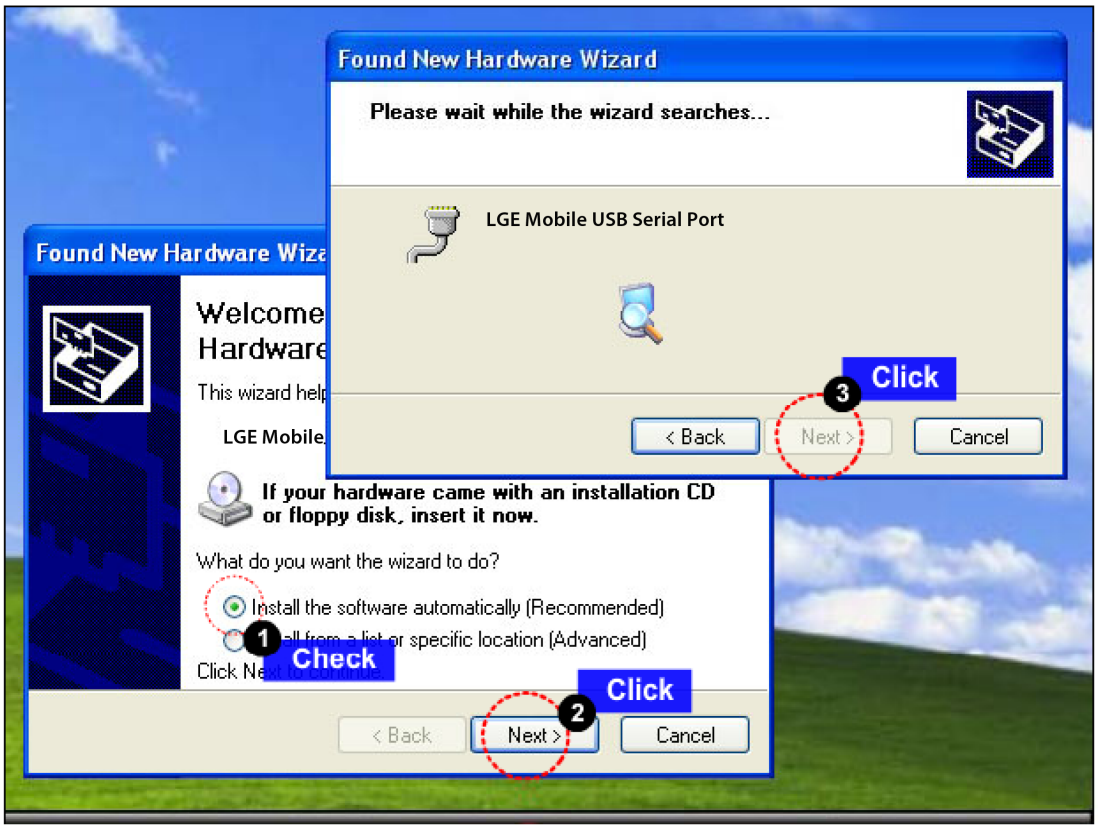

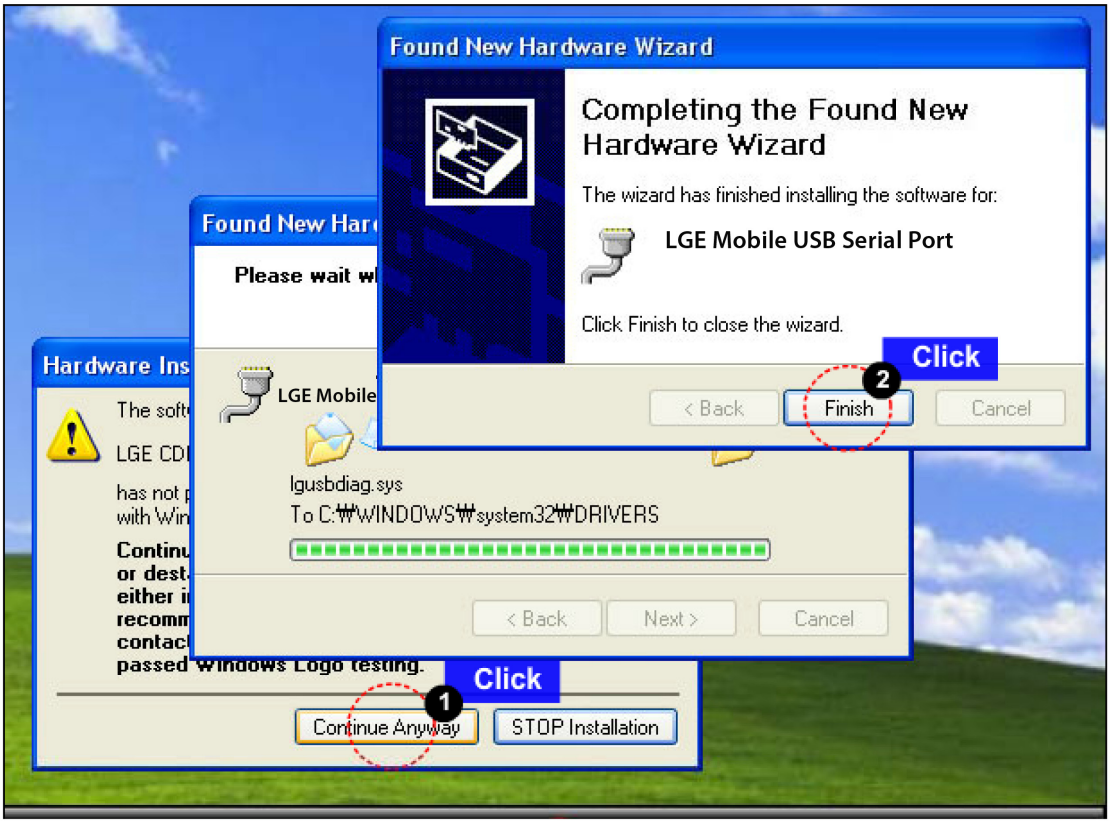

Copyright © 2014 LG Electronics. Inc. All right reserved.
Only for training and service purposes

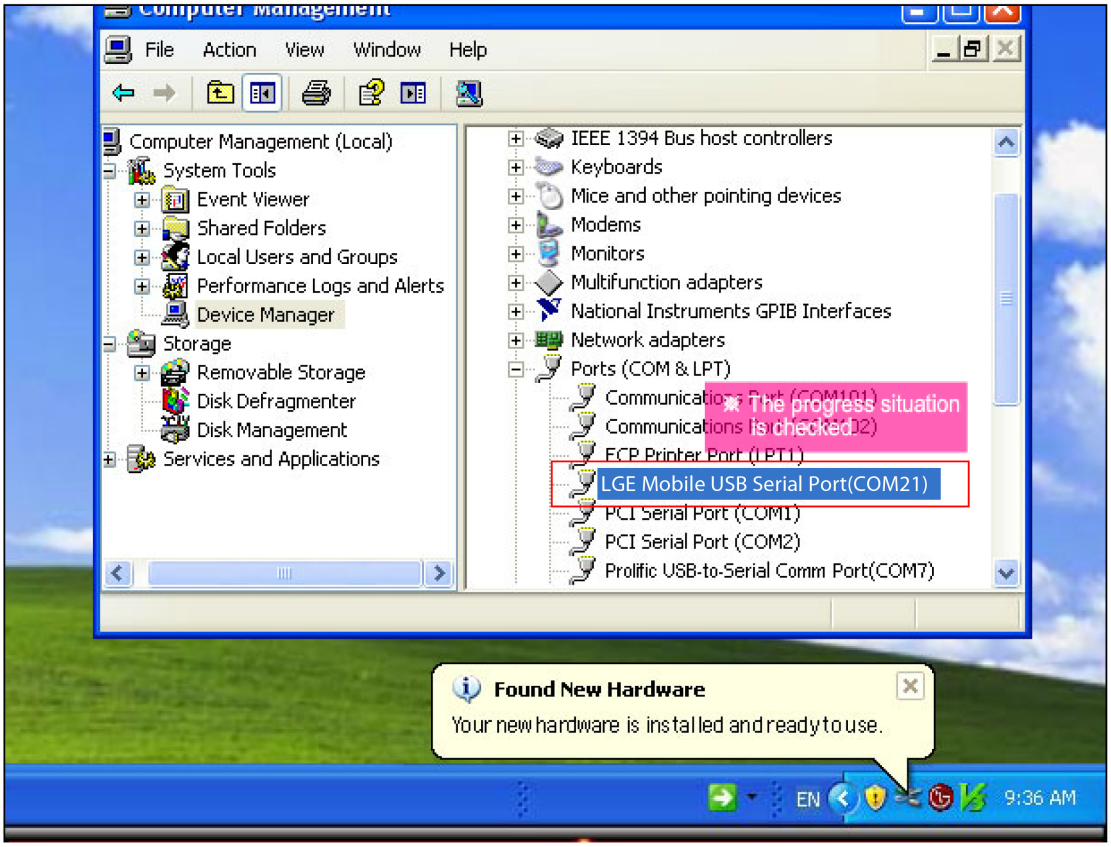

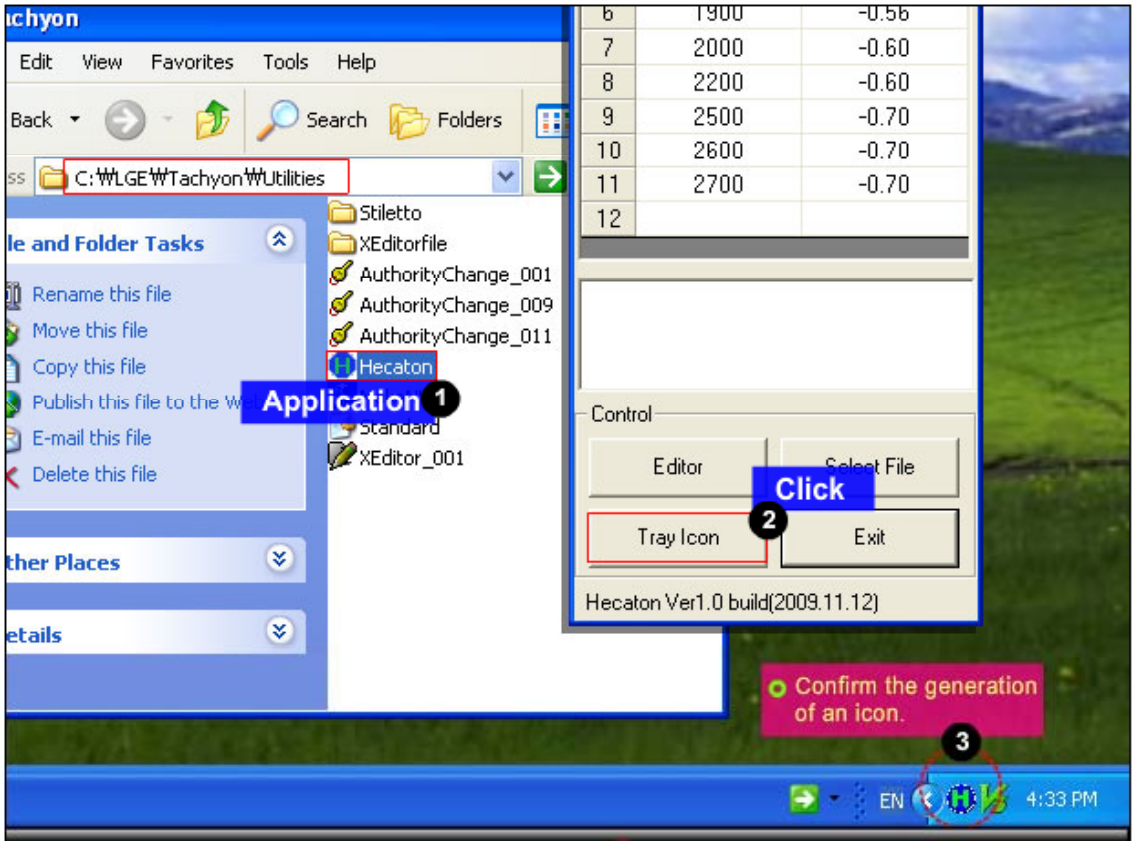

Copyright © 2014 LG Electronics. Inc. All right reserved.
Only for training and service purposes

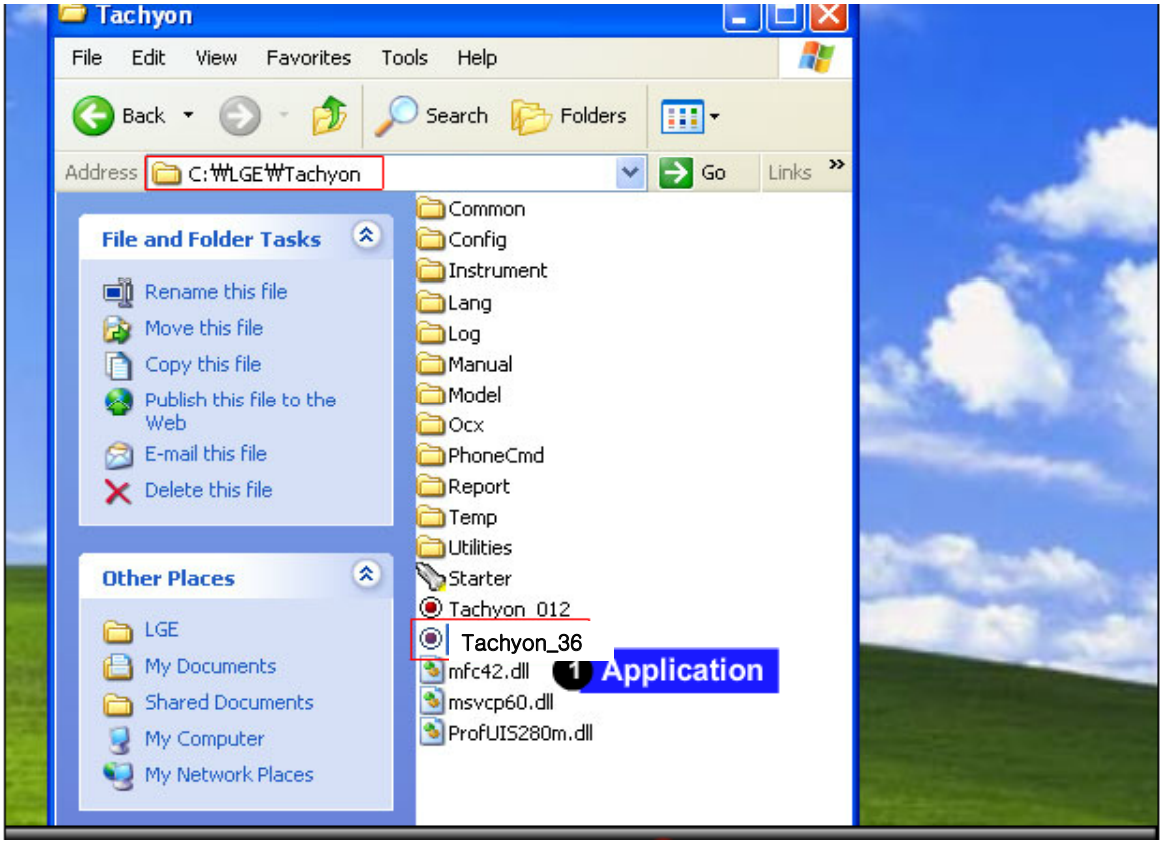

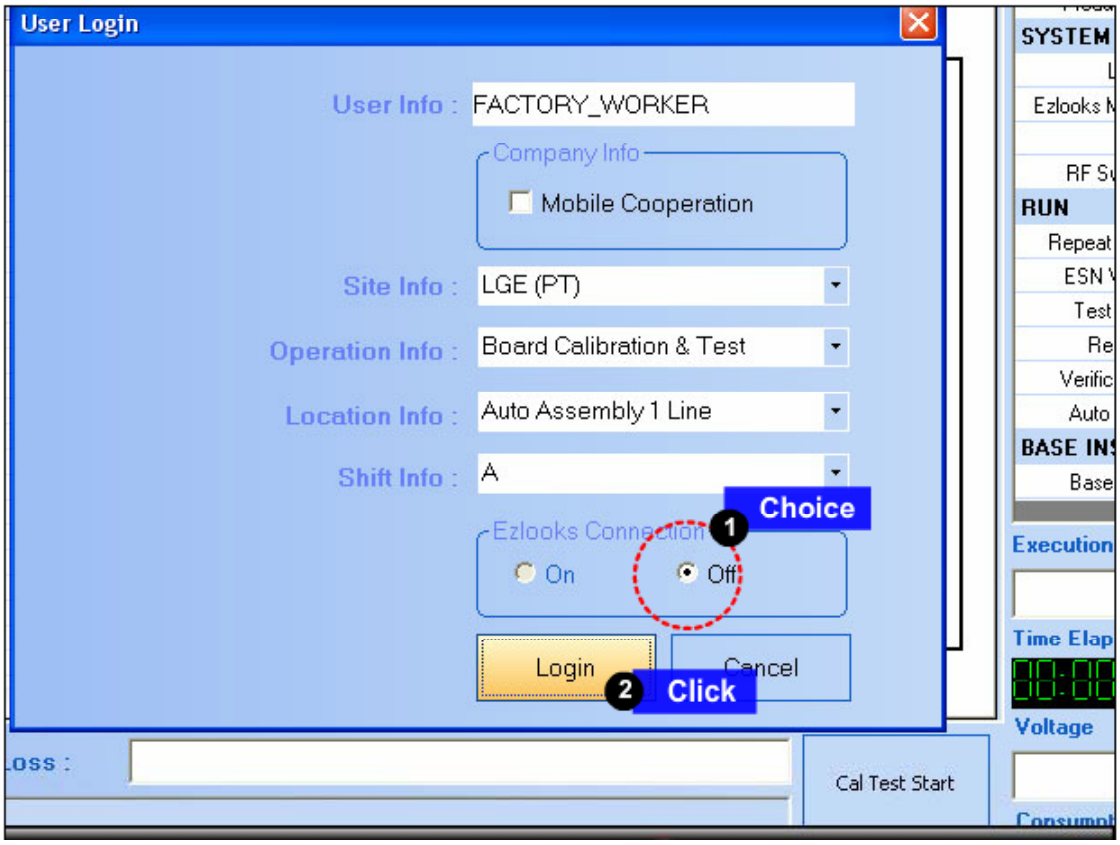

Copyright © 2014 LG Electronics. Inc. All right reserved.
Only for training and service purposes

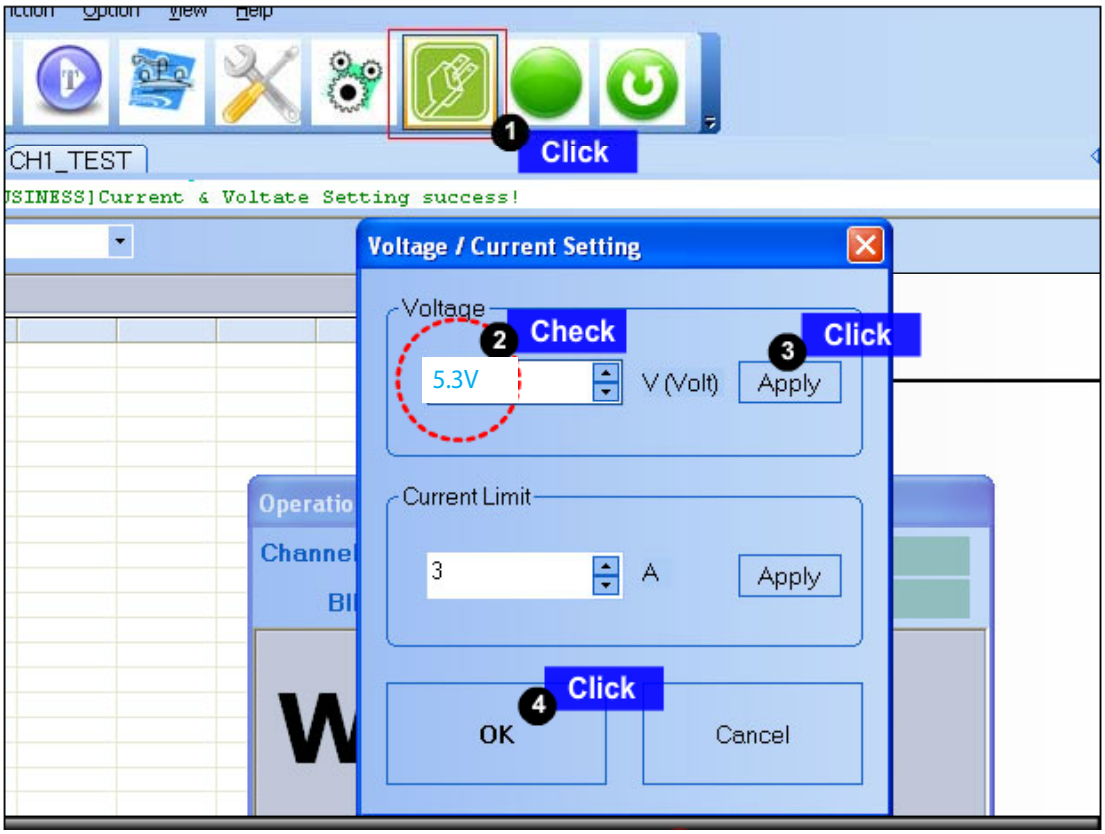

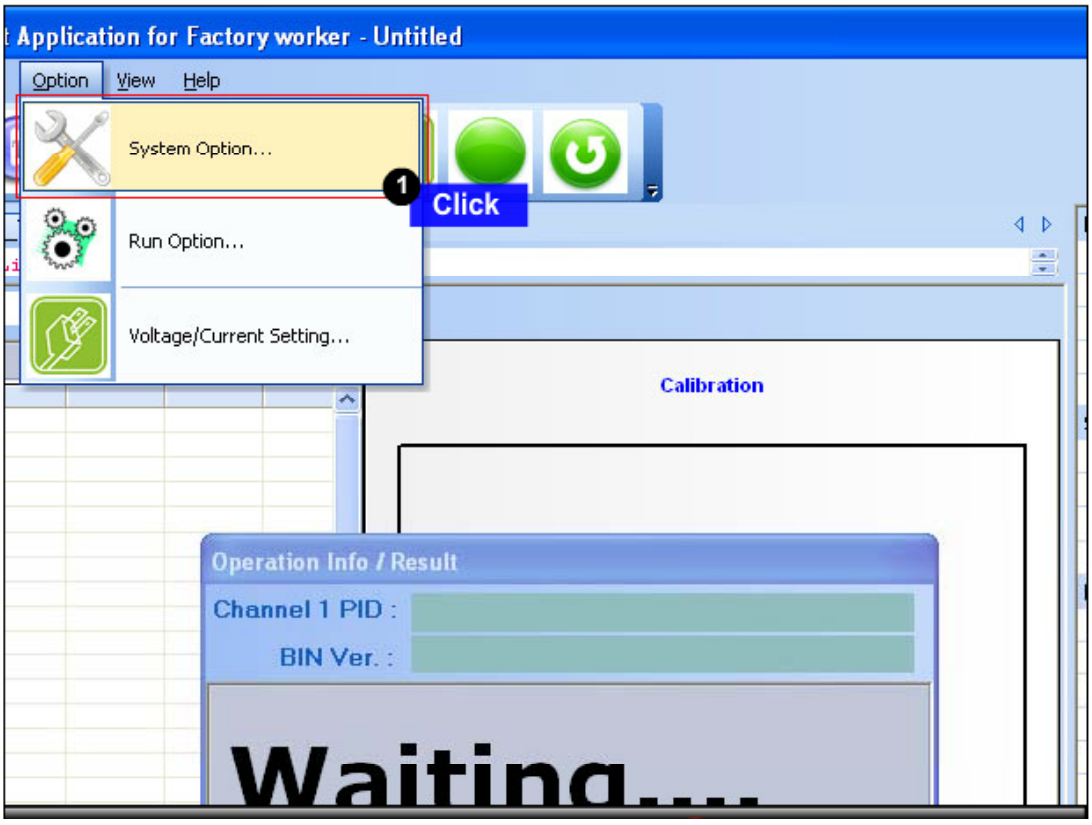

Copyright © 2014 LG Electronics. Inc. All right reserved.
Only for training and service purposes

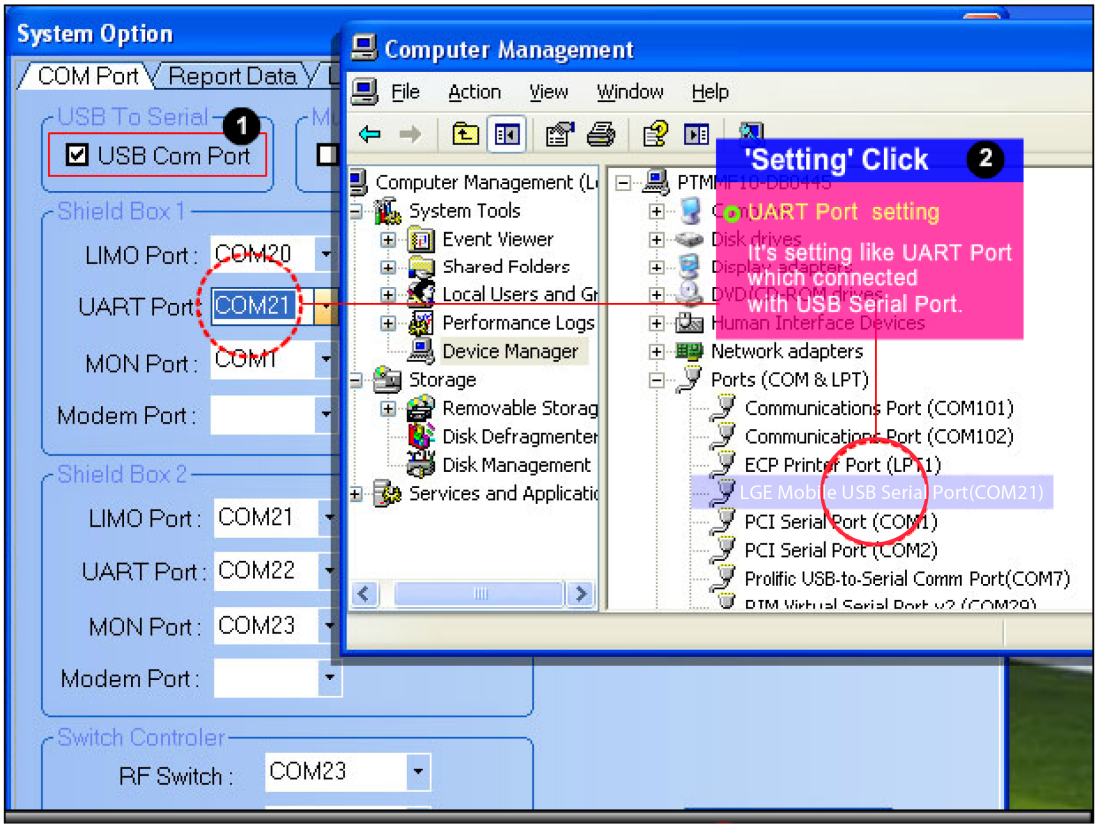

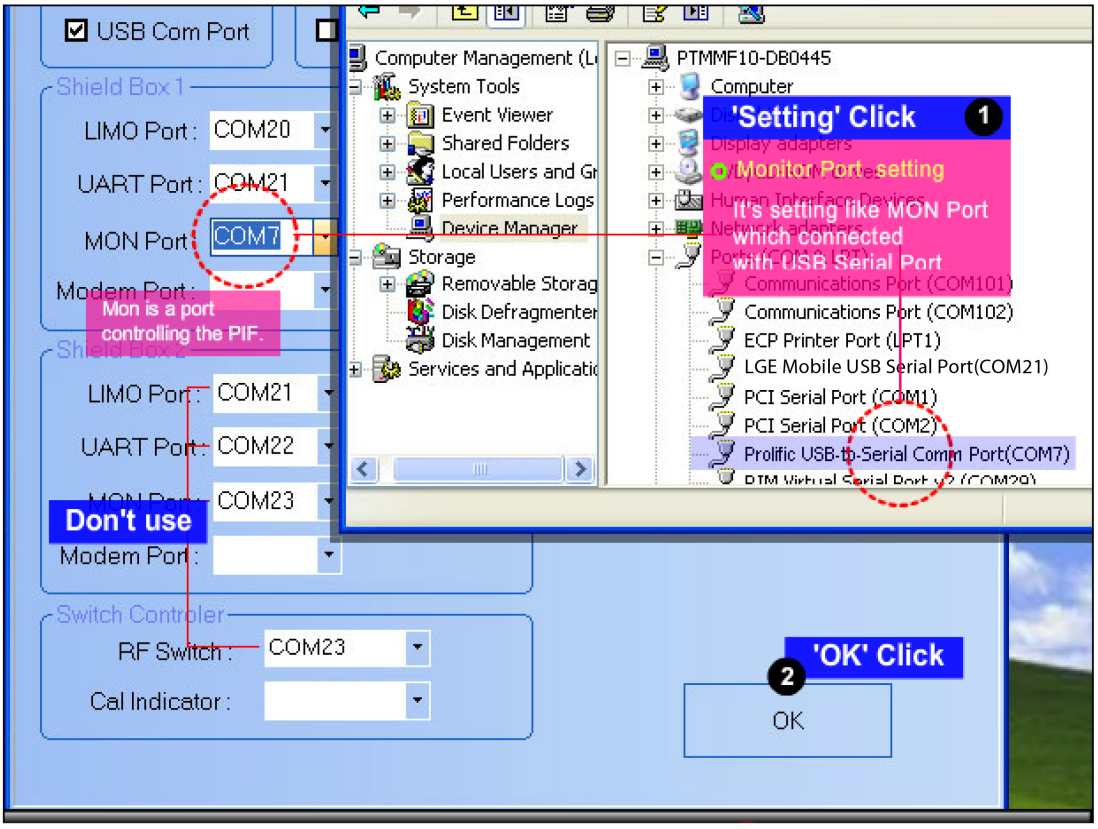

Copyright © 2014 LG Electronics. Inc. All right reserved.
Only for training and service purposes

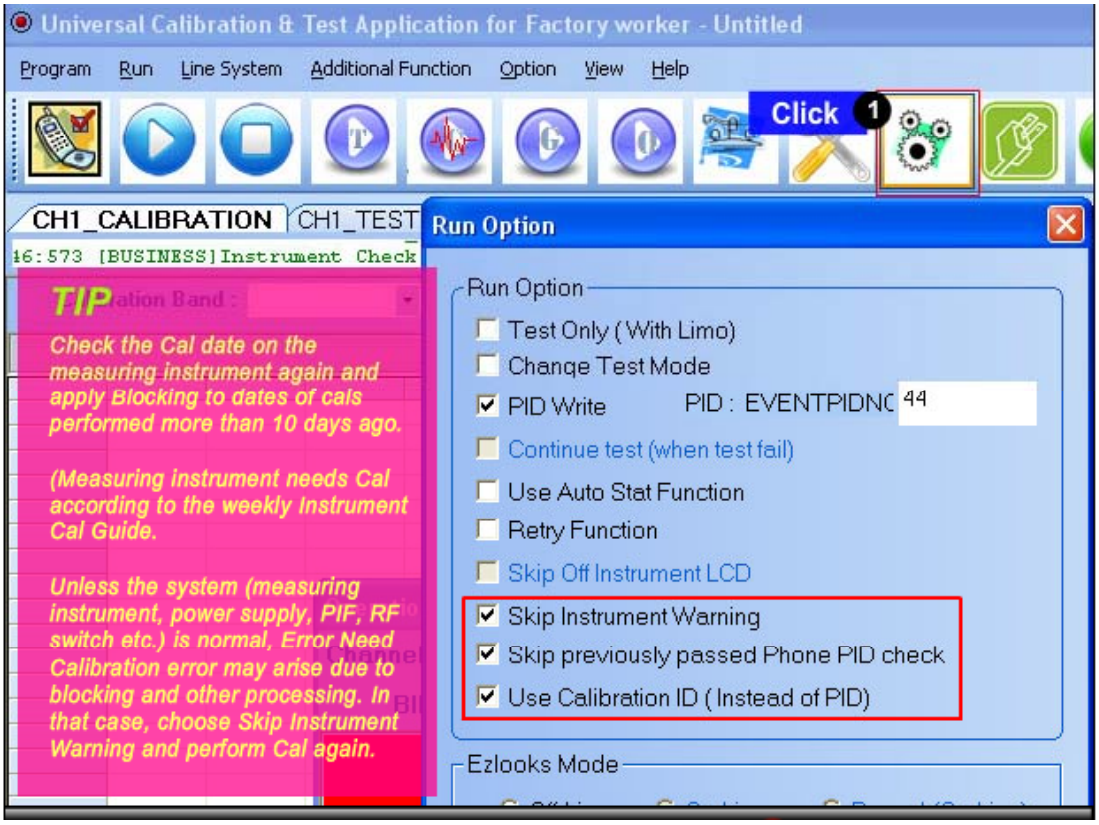

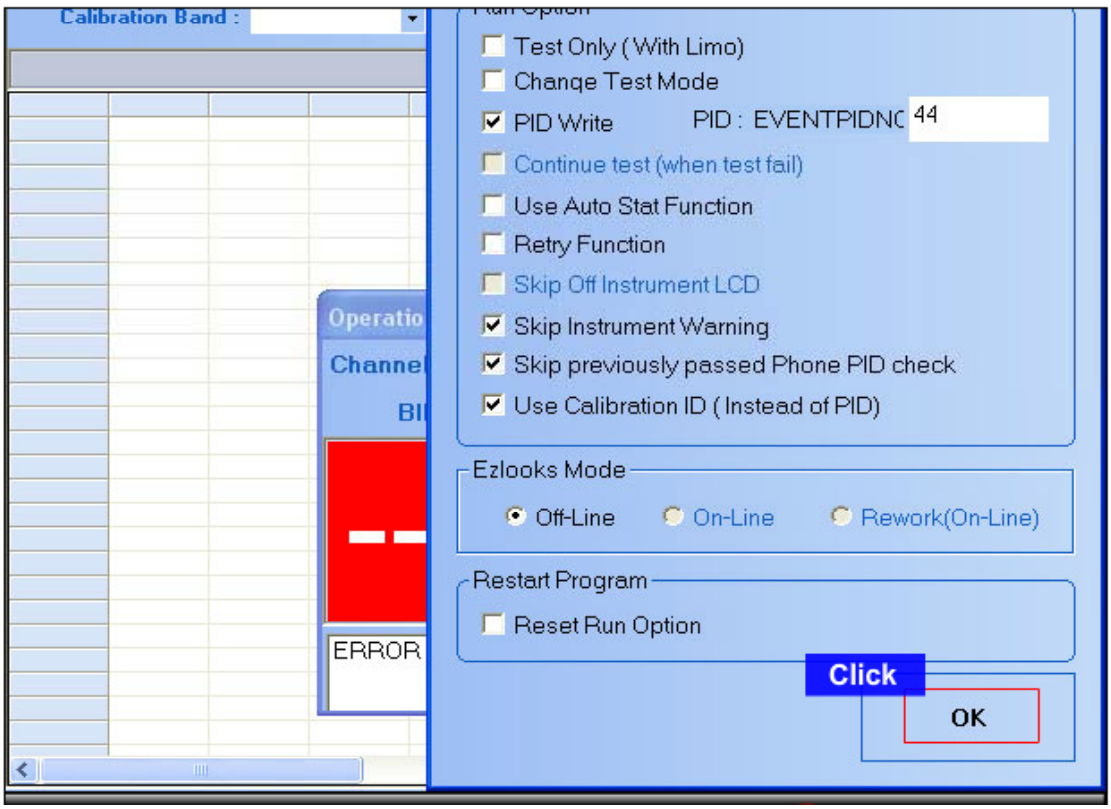

Copyright © 2014 LG Electronics. Inc. All right reserved.
Only for training and service purposes

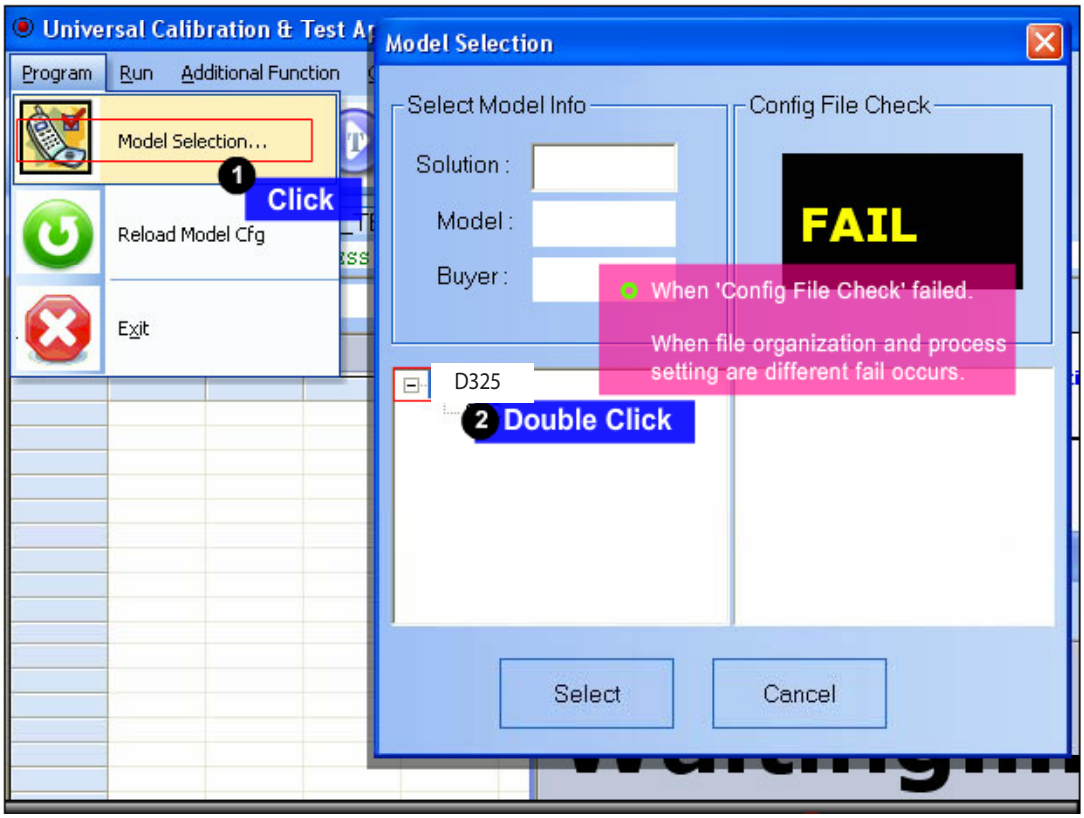

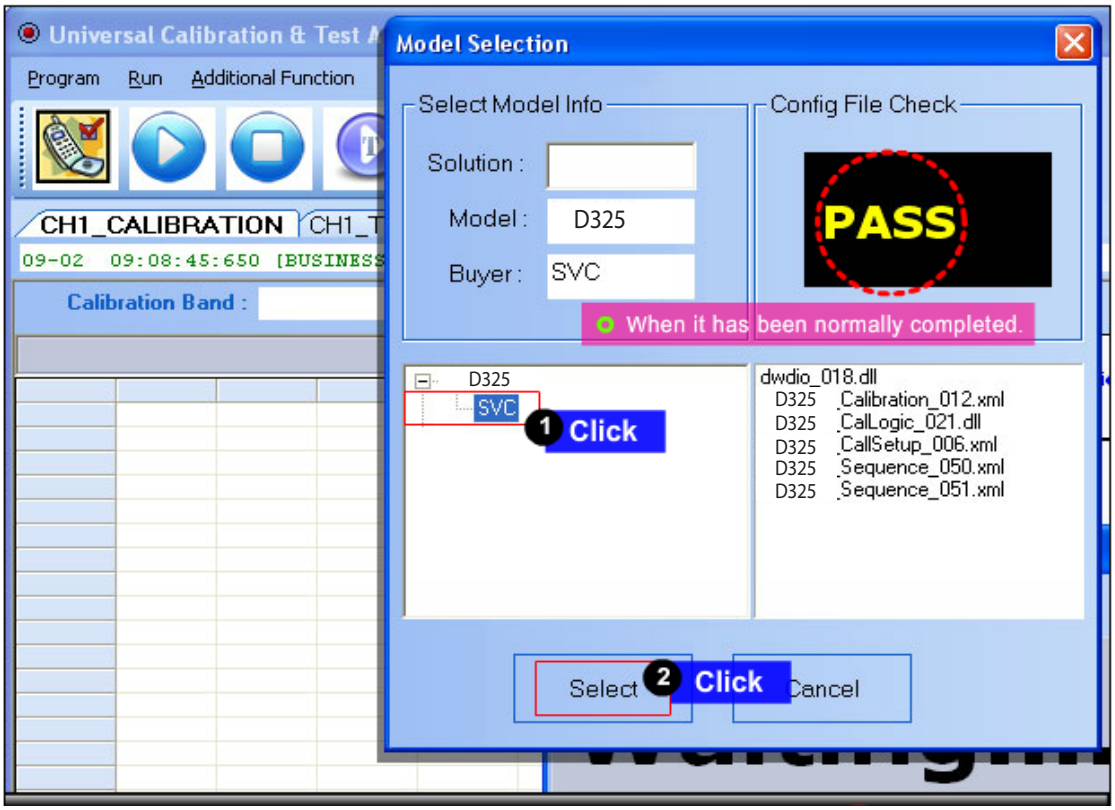

Copyright © 2014 LG Electronics. Inc. All right reserved.
Only for training and service purposes

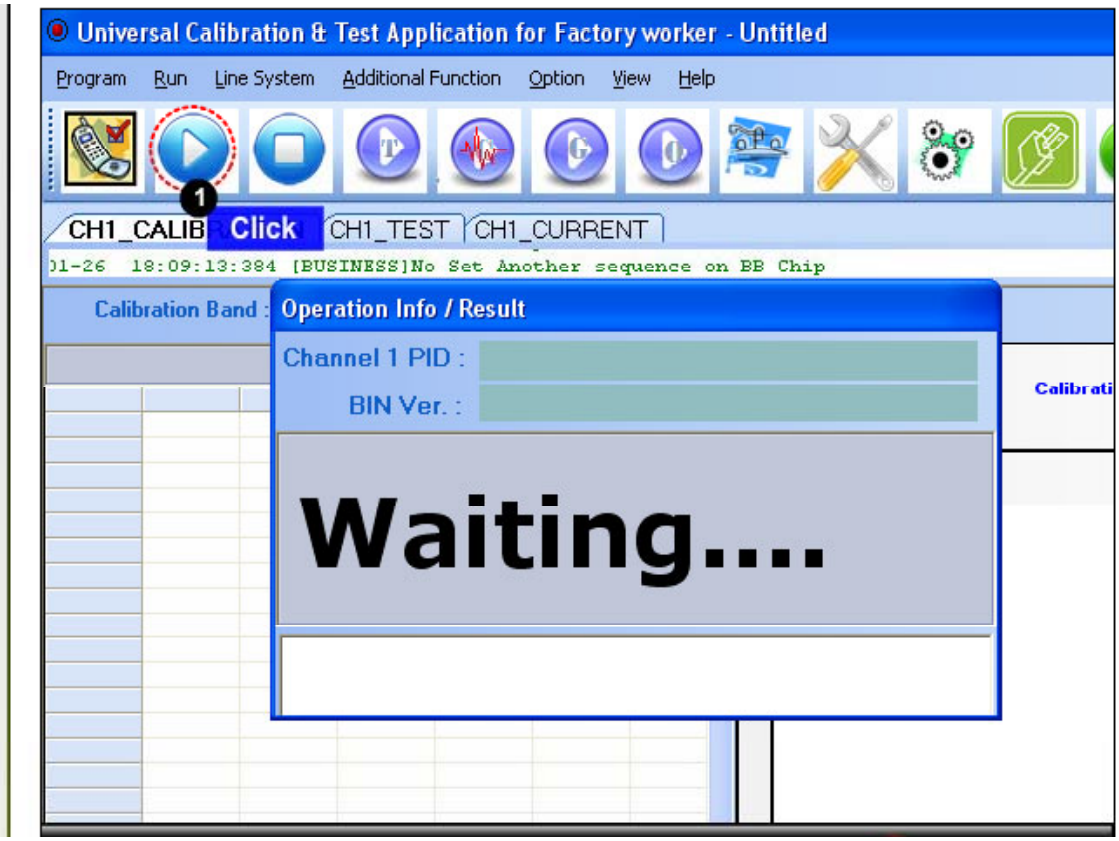

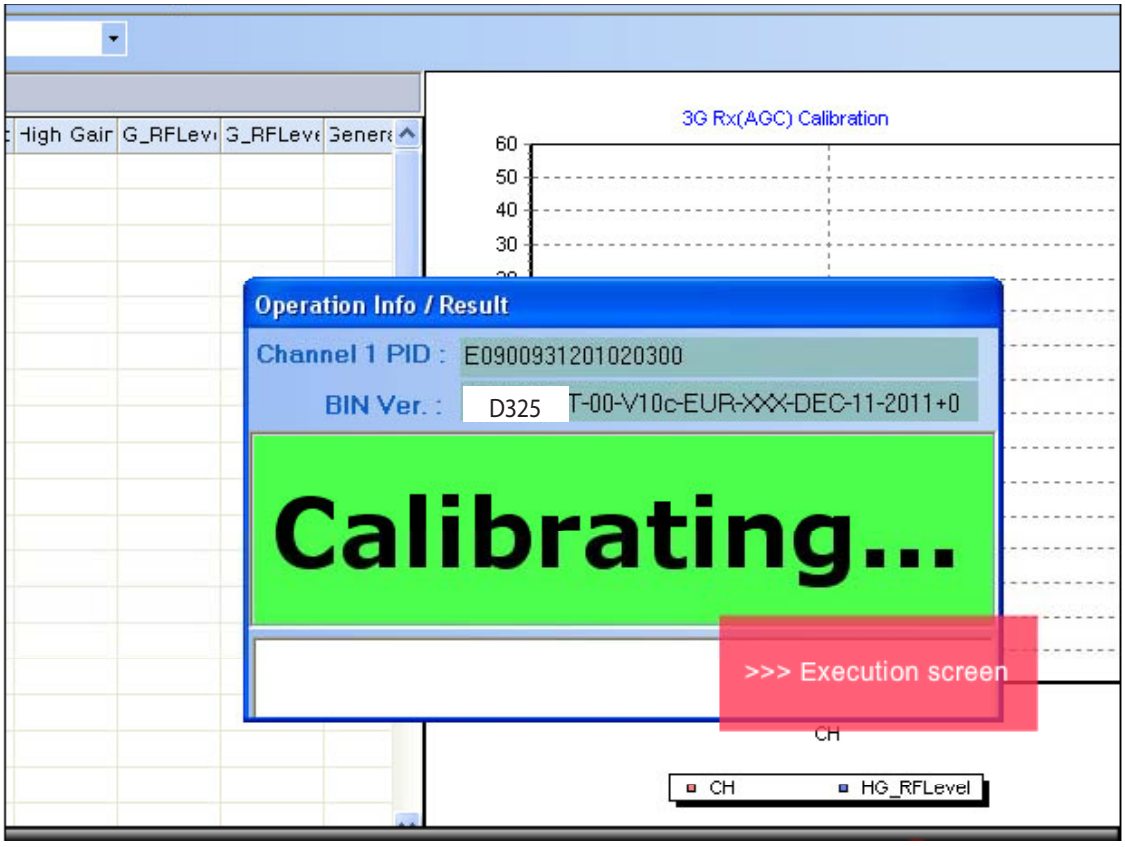

Copyright © 2014 LG Electronics. Inc. All right reserved.
Only for training and service purposes

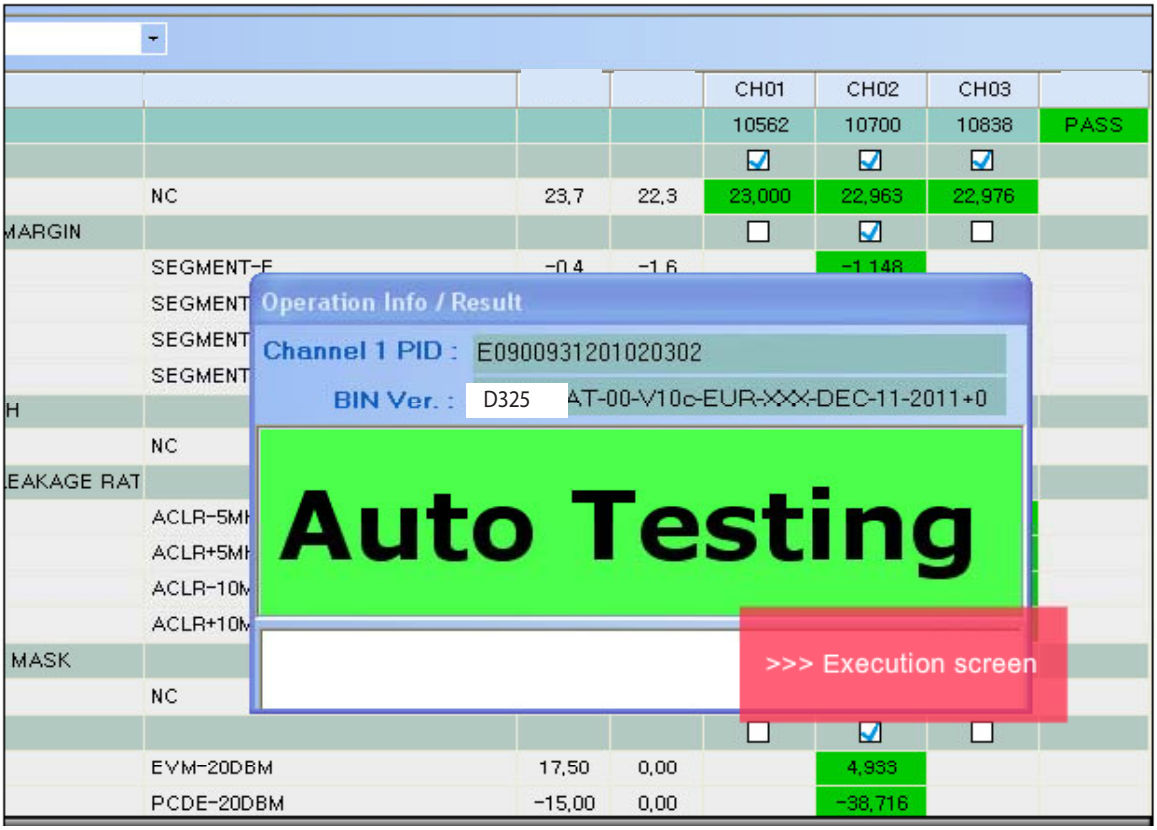

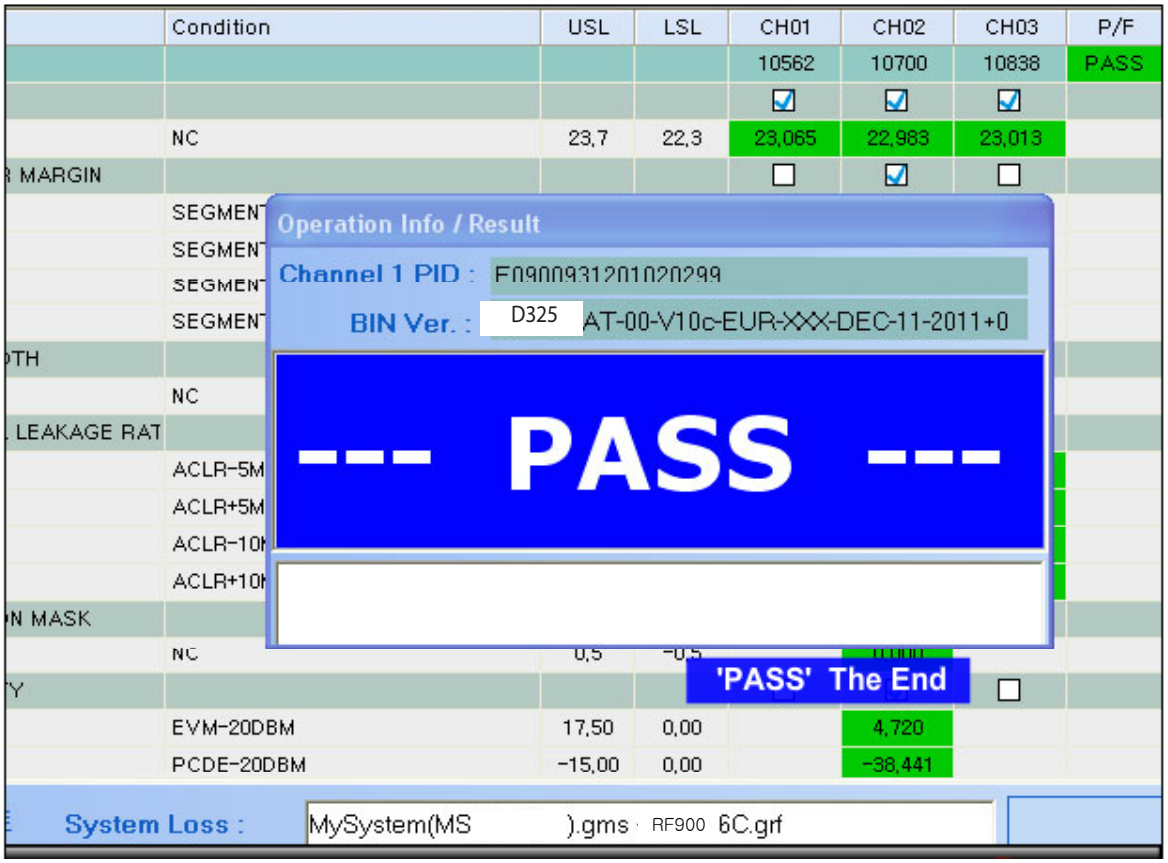

Copyright © 2014 LG Electronics. Inc. All right reserved.
Only for training and service purposes

10. HIDDEN MENU

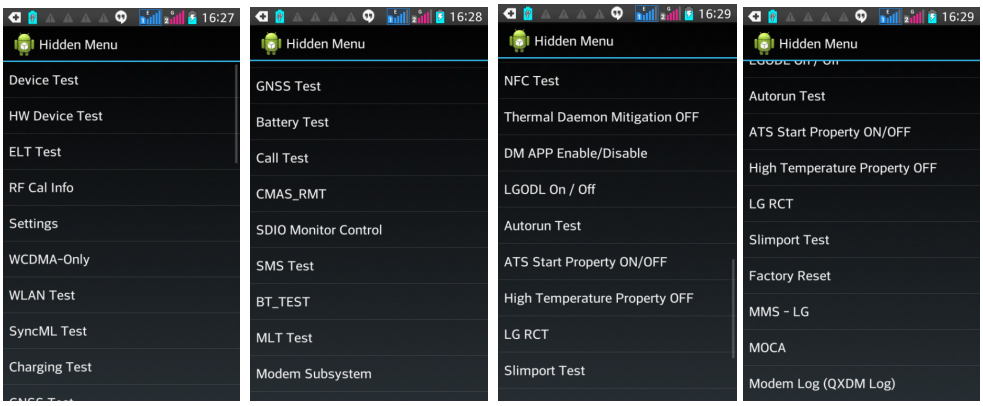

Hidden Menu Start

Start shortcut keys:3845#*325#

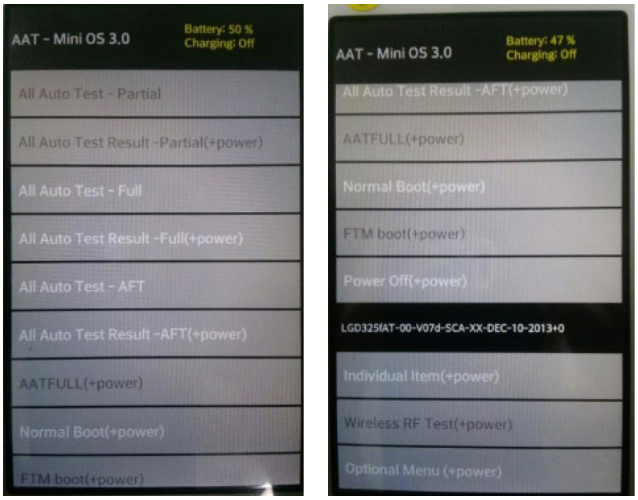

All Auto Test

1. All Auto Test – Partial
2. All Auto Test Result– Partial(+power)
3. All Auto Test – Full
4. All Auto Test Result– Full(+power)
5. All Auto Test – AFT
6. All Auto Test Result– AFT(+power)
7. AATFULL (+power)
8. Normal Boot (+power key)
9. FTM Boot (+power key)
10. Power Off (+power key)
11. Version Name
12. Individual Item(+power)
13. Wireless RF Test(+power)
14. Optional Menu(+power)

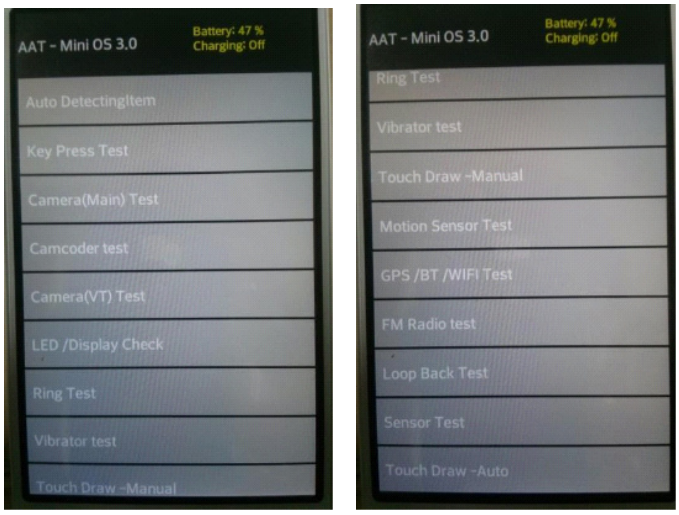

Individual Item List:

1. Auto DetectingItem
2. Key Press Test
3. Camera(Main) test
4. Camcorder Test
5. Camera(VT) test
6. LED / Display check Test
7. Ring Test
8. Vibrator Test
9. Touch Draw-Manual
10. Motion Sensor Test
11. GPS BT WIFI Test
12. FM Radio Test
13. Loopback Test
14. Sensor Test
15. Touch Draw-Auto

Copyright © 2014 LG Electronics. Inc. All right reserved.
Only for training and service purposes

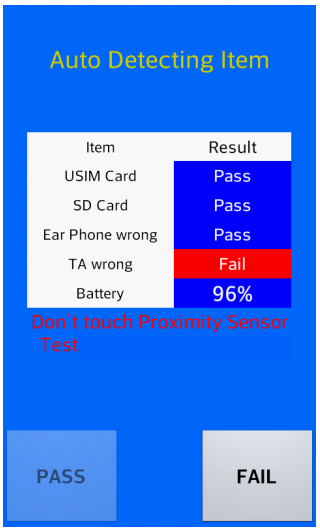	**Auto Detecting Test** : USIM, SD card, Ear jack, TA, Battery • Check the SIM card • Check the SD card • Check Ear phone(jack) • Check TA • Check Battery - Ejected TA is normal - Ejected ear jack is normal
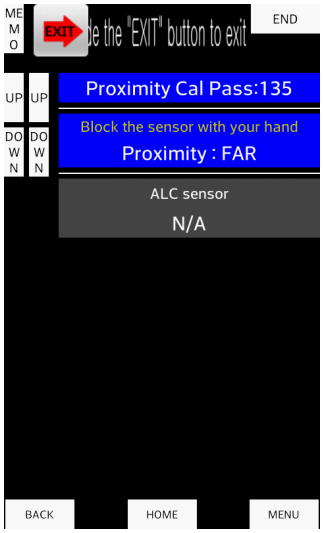	**Key/Compass Test** Memo key : Check Recognition Up/Down key : Check Recognition Menu key : Check Recognition Home key : Check Recognition Back key : Check Recognition End key : Check Recognition Phone contact with your fingers in the top of the sensor determine the sensor response - Far - Near
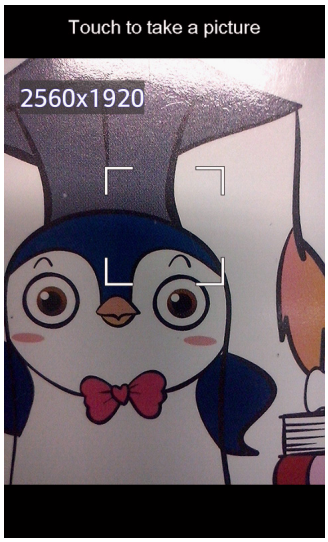	**Camera Test 1** Main Camera Preview

Copyright © 2014 LG Electronics. Inc. All right reserved.
Only for training and service purposes

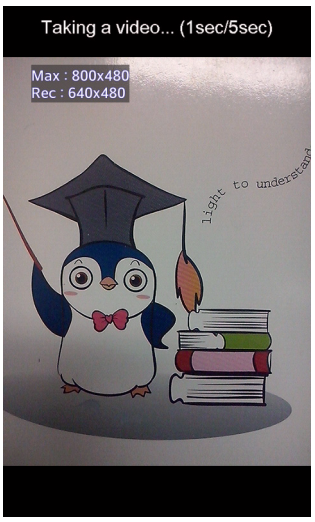	**Camera Test 2** Camcorder Preview
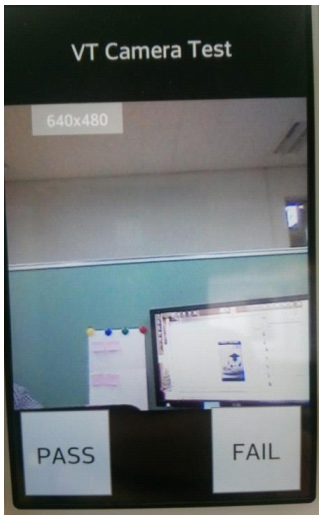	**Camera Test 1** VT Camera Preview
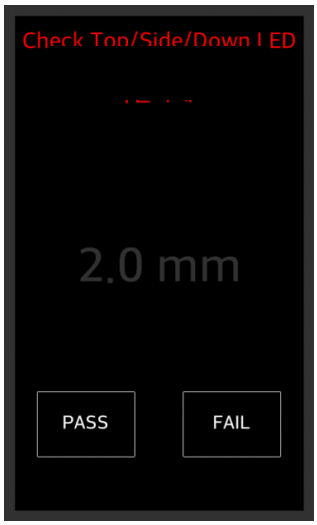 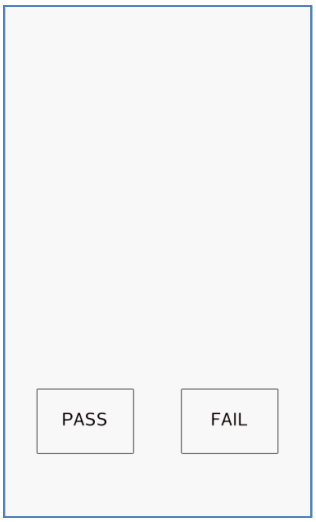	**LED / Display check Test** : LCD Black & White test, LED test, MURA 2.0 mm test • Check the Black display • Check the White display • Check the Home key LED • Check MURA 2.0 mm

Copyright © 2014 LG Electronics. Inc. All right reserved.
Only for training and service purposes

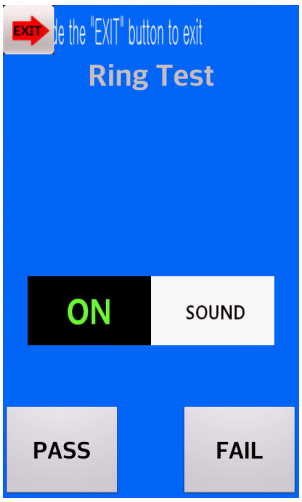	Ring Test : Check sound • Check the sound
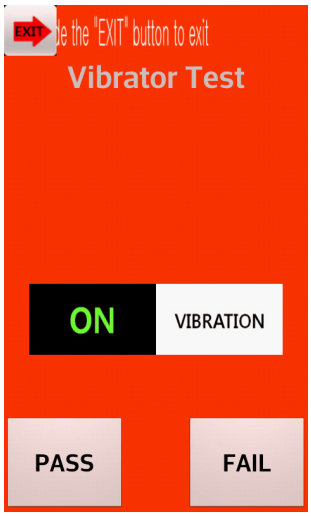	**Vibrator test** A case-by-state vibration tests
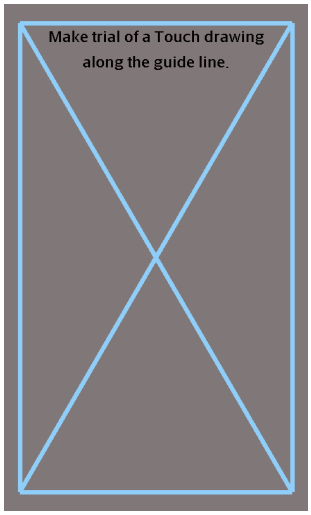	**Touch window test** Write with finger

Copyright © 2014 LG Electronics. Inc. All right reserved.
Only for training and service purposes

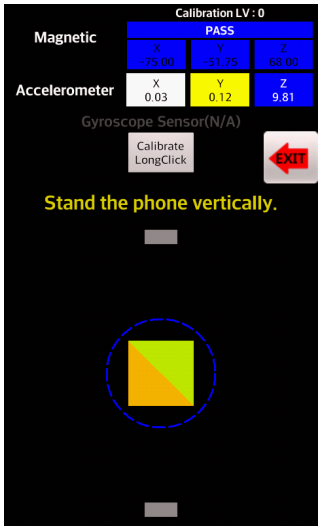	**Accelerometer Test** : Magnetic sensor test, Accelerometer sensor test • Check the magnetic sensor • Check the accelerometer sensor
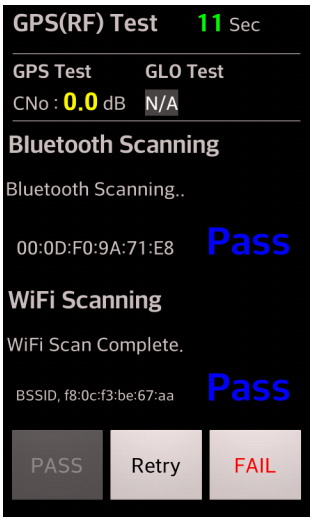	**GPS BT WI-FI Test** • Check the GPS scanning • Check the GLONASS : N/A • Check the WIFI scanning • Check the BT scanning
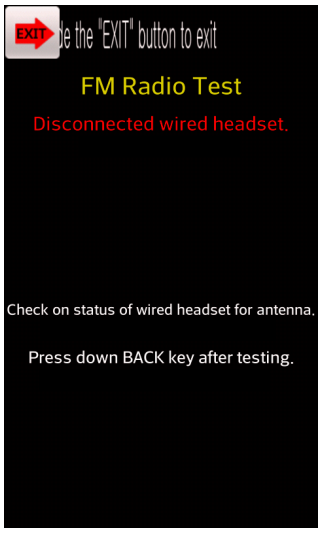	**FM Radio Test** • Check the FM Radio

Copyright © 2014 LG Electronics. Inc. All right reserved.
Only for training and service purposes

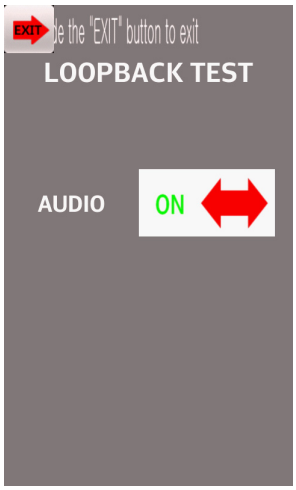	**Audio Loopback Test** • Check the Receiver loopback • Check the speaker loopback
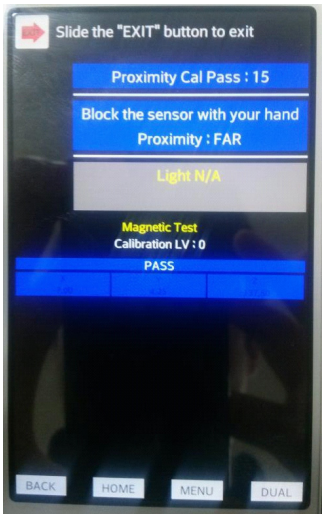	**Sensor Test**
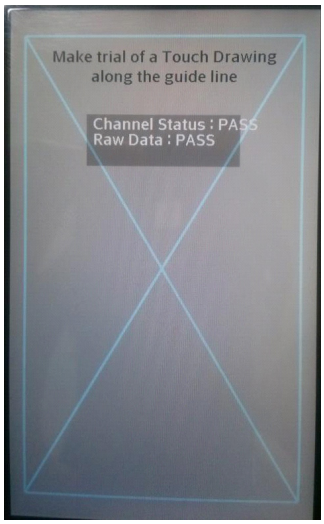	**Touch Draw -Auto**

Copyright © 2014 LG Electronics. Inc. All right reserved.
Only for training and service purposes

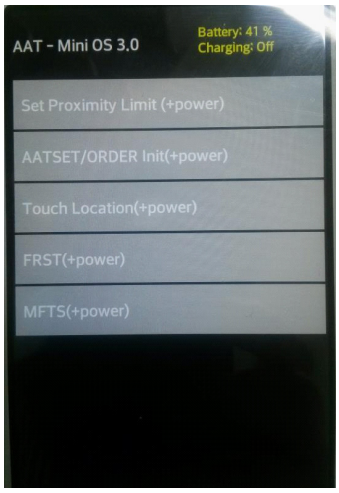	**Optional Menu List:** 1. Set Proximity Limit(+power) 2. AATSET/ORDER init (+power) 3. Touch Location (+power) 4. FRST (+power) 5. MFTS (+power)
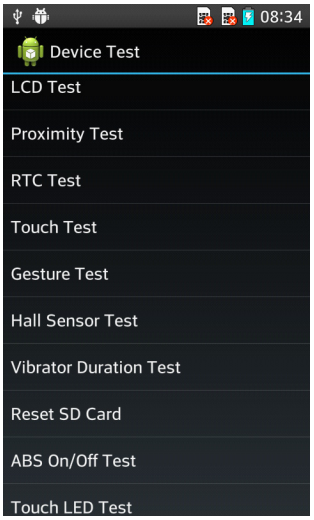	**HW Device Test** 1. LCD 2. Proximity 3. RTC 4. Touch 5. Gesture 6. Hall Sensor 7. Vibrator Dutation 8. Reset SD Card 9. ABS On/Off Test 10. Touch LED Test(Not Implemented)
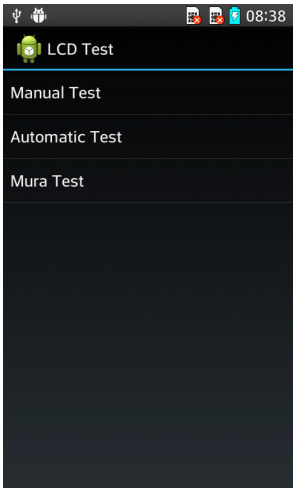	**LCD list** - Manual Test - Automatic Test - Mura Test

Copyright © 2014 LG Electronics. Inc. All right reserved.
Only for training and service purposes

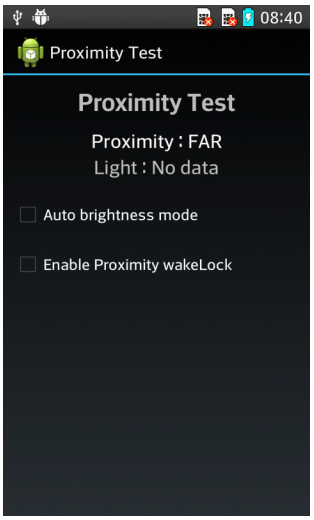	**Proximity**
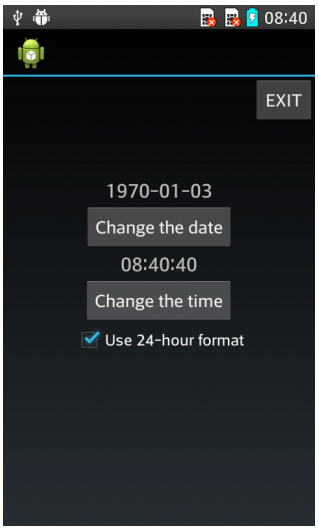	**RTC**
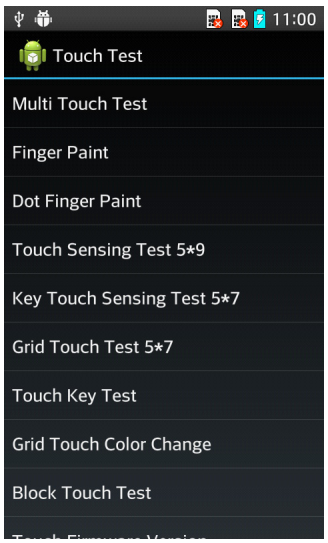	**Touch list** - Multi Touch Test - Finger Paint - Dot Finger Paint - Touch Sensing Test 5*9 - key Touch Sensing Test 5*7 - Grid Touch Test 5*7 - Touch Key Test - Grid Touch Color change - Block Touch Test - Touch Firmware Version - Touch Firmware Upgrade - Check Touch Panel

Copyright © 2014 LG Electronics. Inc. All right reserved.
Only for training and service purposes

	**Gesture**
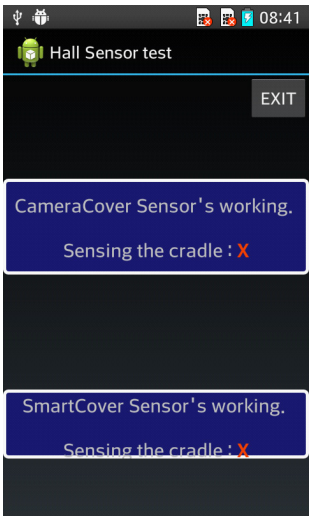	**Hall Sensor**
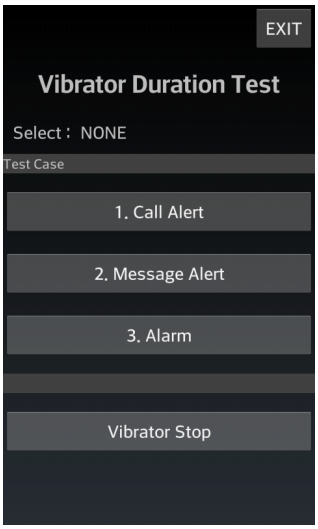	**Vibrator Duration**

Copyright © 2014 LG Electronics. Inc. All right reserved.
Only for training and service purposes

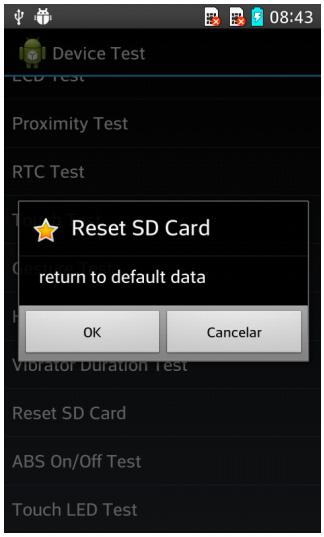	**Reset SD Card**
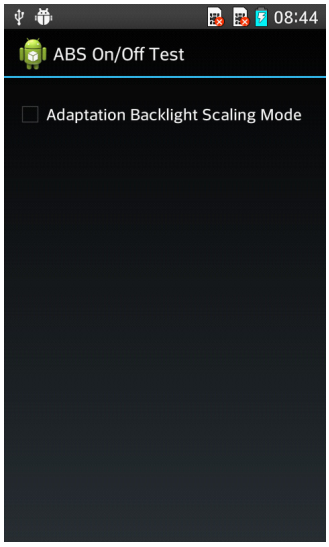	**ABS On/Off Test**
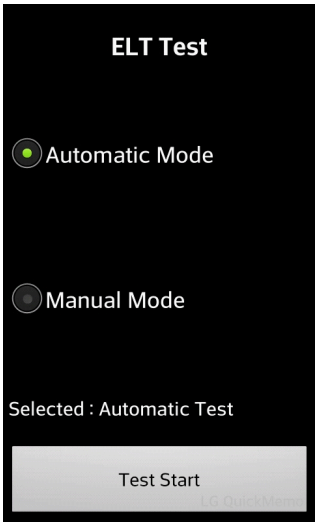	**ELT Test** Automatic Mode -> Test Automatically Manual Mode : Test selectivity

Copyright © 2014 LG Electronics. Inc. All right reserved.
Only for training and service purposes

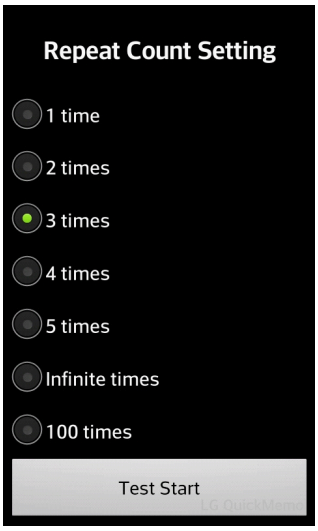	**ELT Test** Automatic Mode : LCD Automatic on/off test -> time setting
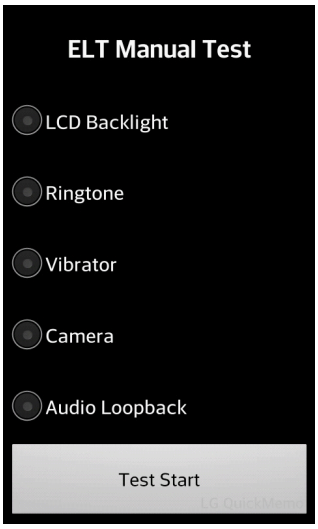	**ELT Manual Test** - LCD Backlight - Ringtone - Vibrator - Camera - Audio Loopback -> test on the device is working (The ability to use plant)
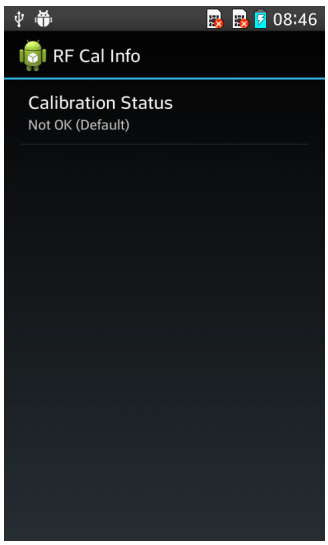	**RF Cal Info**

Copyright © 2014 LG Electronics. Inc. All right reserved.
Only for training and service purposes

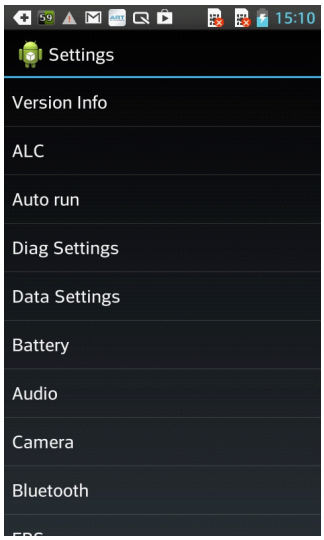	**Settings** - Version Info - ALC - Diag Settings - Data Settings - Battery - Audio - Camera - ERS - ETC - LCD Always On - Auto Answer - Upsell URL - ATS Start Property On - Update Touch Firmware - APN Delete - FastDormancy Mode
	**Version Info** (Classified Information representation) - SW Version Info - Firmware Version - Baseband Version -Kernel Version - HW Version - Factory Version - Touch Firmware Version - Build finger print

Copyright © 2014 LG Electronics. Inc. All right reserved.
Only for training and service purposes

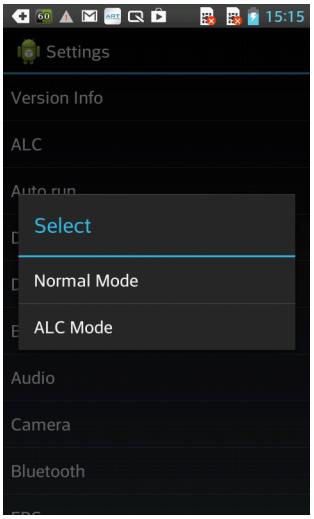	**ALC** Normal Mode : Change to Normal Mode ALC Mode : Change to ALC Mode
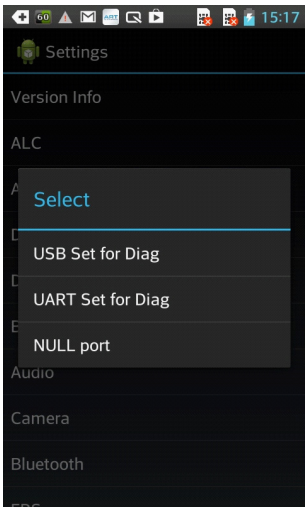	**Diag Settings** - USB Set for Diag - UART Set for Diag - Null port
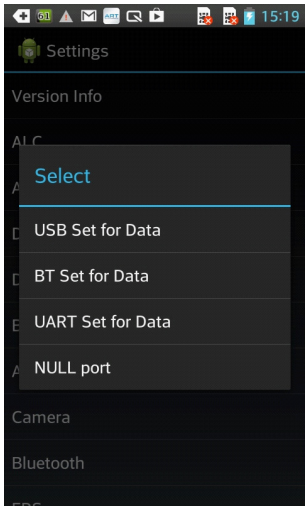	**Data Settings** - USB Set for Data - BT Set for Data - UART Set for Data - Null port

Copyright © 2014 LG Electronics. Inc. All right reserved.
Only for training and service purposes

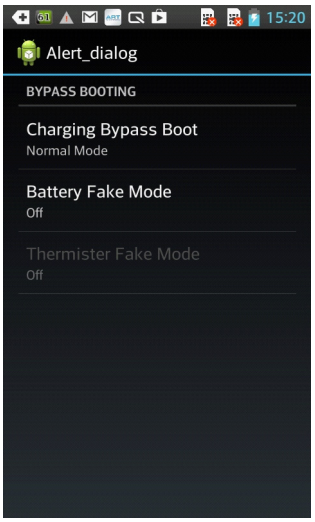	**Battery** Charging Bypass Boot -> Change to Pseudo LT Mode/Normal Mode - Battery Fake Mode(On/Off)
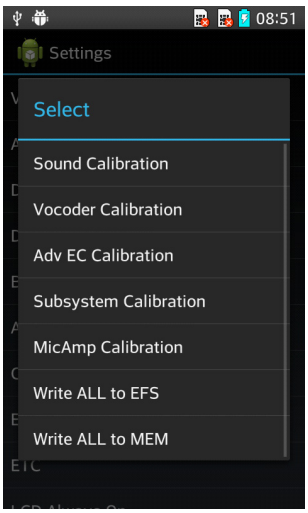	**Audio** - Sound Calibration - Vocoder Calibration - Adv EC Calibration - Subsystem Calibration - MicAmp Calibration - Write All to EFS - Write All to MEM
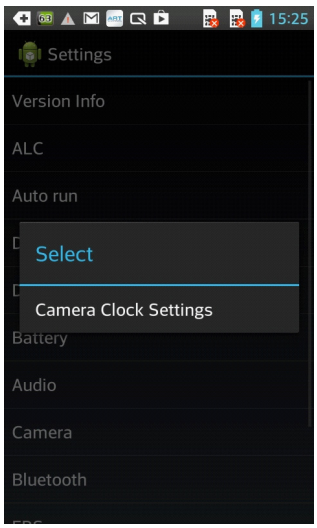	**Camera** Camera Clock Settings

Copyright © 2014 LG Electronics. Inc. All right reserved.
Only for training and service purposes

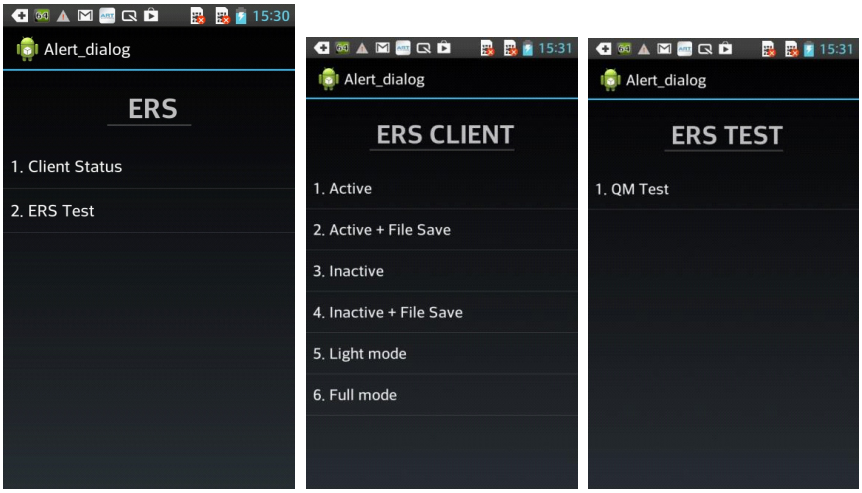

ERS Settings

- Client Status
- ERS Test

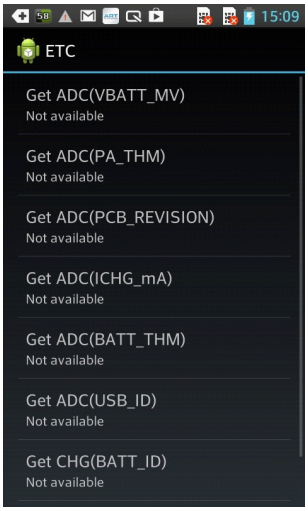

ETC

ADC Info

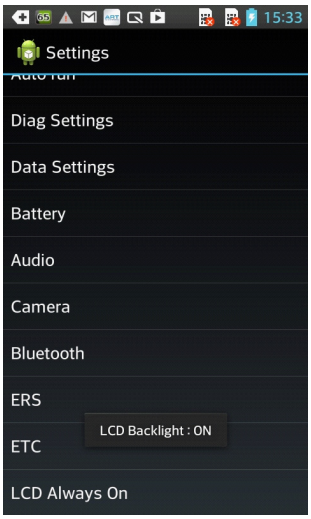

LCD Always On

Switch to LCD Backlight ON/OFF

Copyright © 2014 LG Electronics. Inc. All right reserved.
Only for training and service purposes

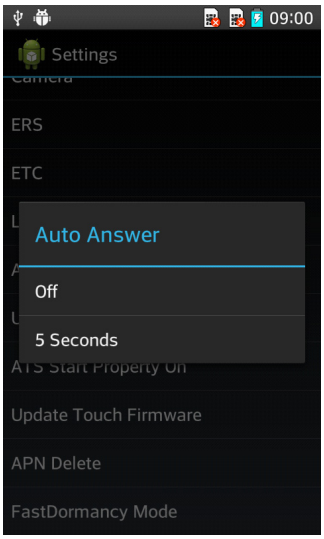	**Auto Answer**
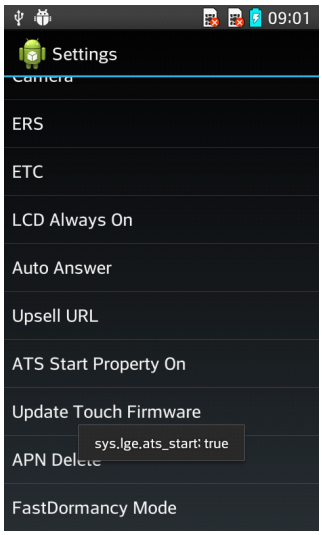	**ATS Start Property On**
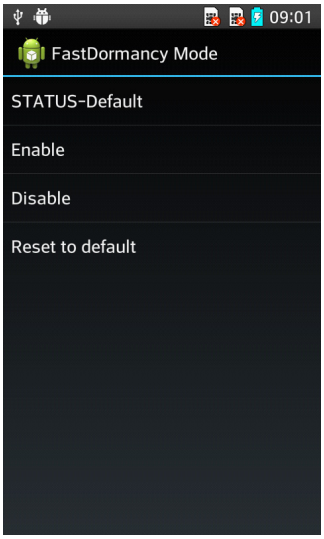	**FastDormancy Mode**

Copyright © 2014 LG Electronics. Inc. All right reserved.
Only for training and service purposes

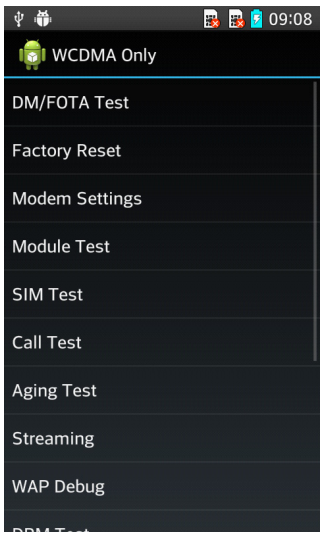	**WCDMA Only test list** - DM/FOTA Test(Not Implemented) - Factory Reset - Modem Settings - Module Test - SIM Test(Not Implemented) - Call Test - Aging Test - Streaming - WAP Debug - DRM Test - Contacts Test - Log service - Fake Language - Mms Test - Flex test
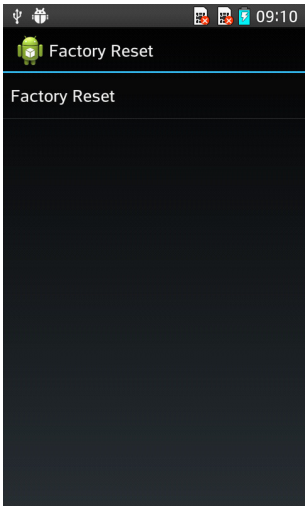	**Factory Reset:** - Factory Rest :Changing the Factory

Copyright © 2014 LG Electronics. Inc. All right reserved.
Only for training and service purposes

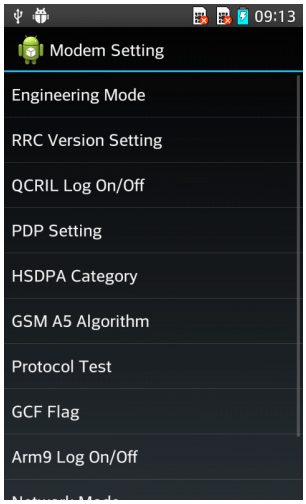	**Modem Settings** - Engineering Mode - RRC Version Setting - QCRIL Log On/Off - PDP Setting - HSDPA Category - GSM A5 Algorithm - Protocol Test - GCF Flag - Arm9 Log On/Off - Network Mode - RAT Selection
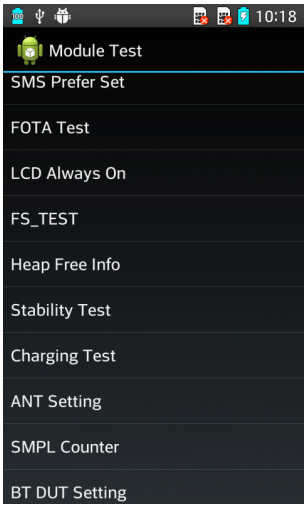	**Module Test list:** - SMS Prefer Set - FOTA Test - LCD Always On - FS_TEST - Heap Free Info - Stability Test - Charging Test - ANT Setting - SMPL Counter - BT DUT Setting
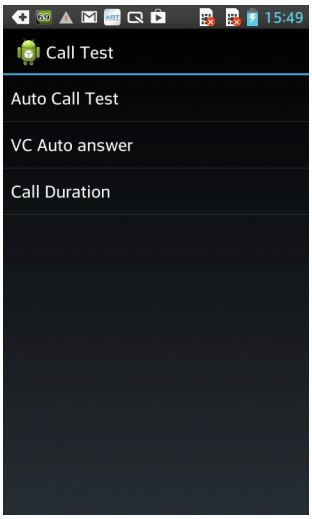	**Call Test** - Auto Call Test - VC Auto answer - Call Duration

Copyright © 2014 LG Electronics. Inc. All right reserved.
Only for training and service purposes

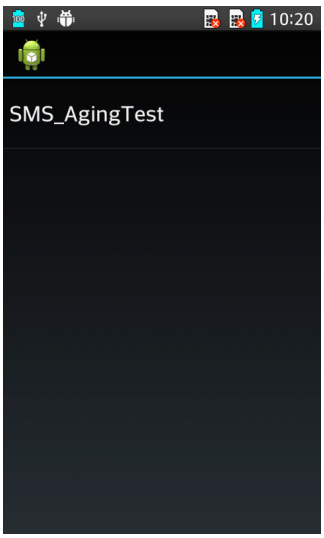	**Aging Test**
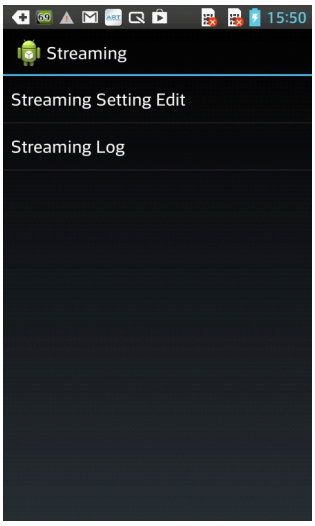	**Streaming** Streaming Setting Edit -> Edit Enable or not Streaming Log -> Log Enable or not
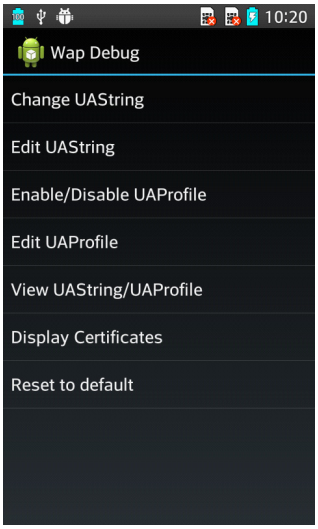	**Wap Debug** -Change UAString - Edit UAString - Enable/Disable UAProfile - Edit UAProfile - View UASting/UAProfile - Display Certificates - Reset to default

Copyright © 2014 LG Electronics. Inc. All right reserved.
Only for training and service purposes

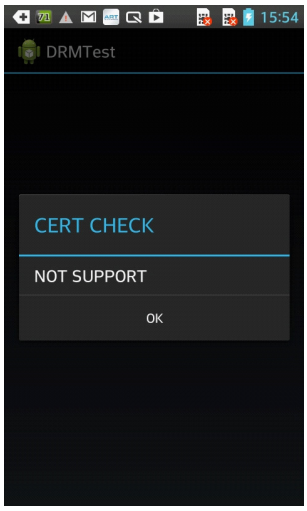	**DRM Test**
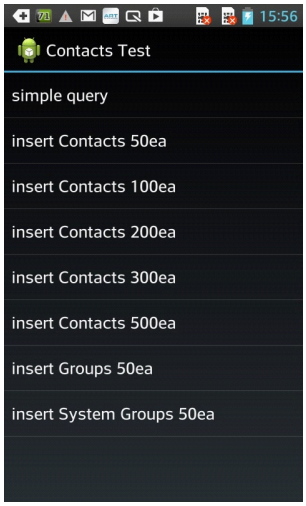	**Contacts Test** Insert specific number of contact info
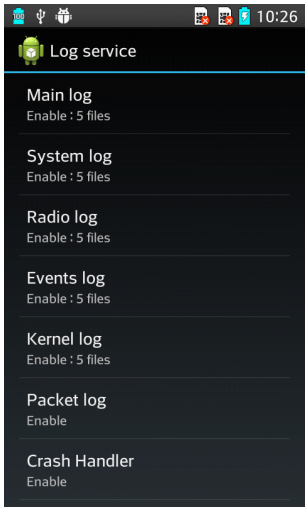	**Log service** **Enable of disable creating below log files.** - Maing log - System log - Radio log - Events log - Kernel log - Packet log

Copyright © 2014 LG Electronics. Inc. All right reserved.
Only for training and service purposes

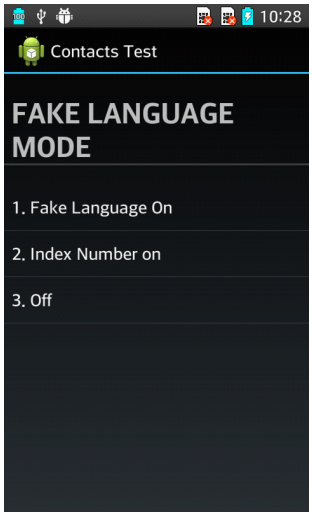	**Fake Language**
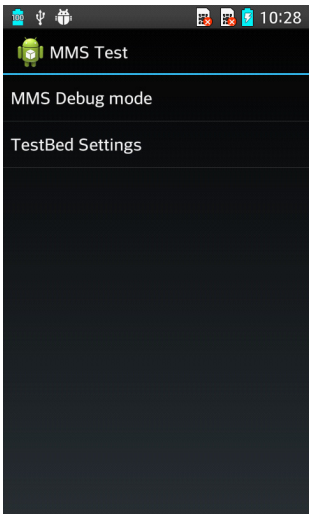	**MMS test**
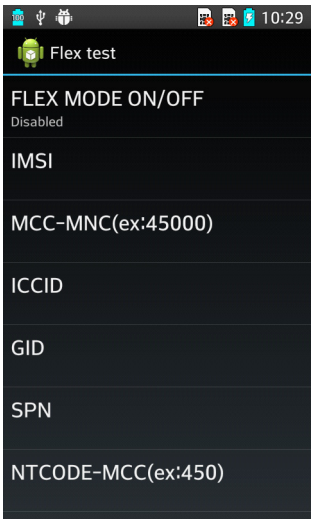	**Flex Test**

Copyright © 2014 LG Electronics. Inc. All right reserved.
Only for training and service purposes

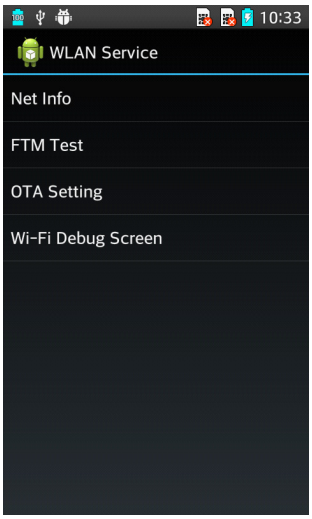	**WLAN Test** WLAN performance on SW
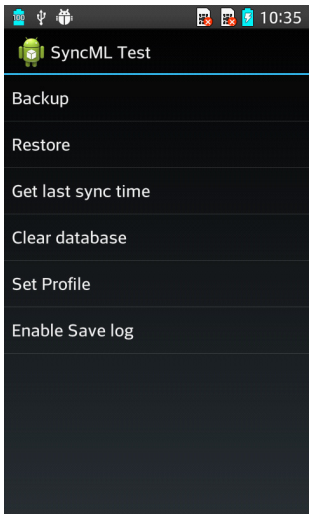	**SyncML Test**
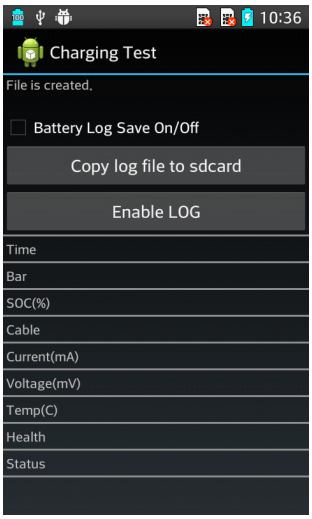	**Charging Test**

Copyright © 2014 LG Electronics. Inc. All right reserved.
Only for training and service purposes

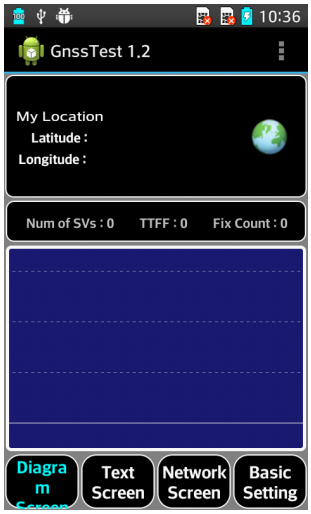	**Gnss Test**
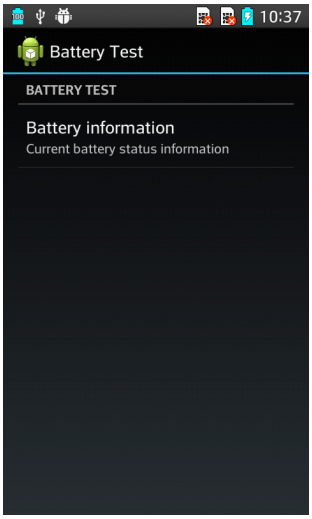	**Battery Test**
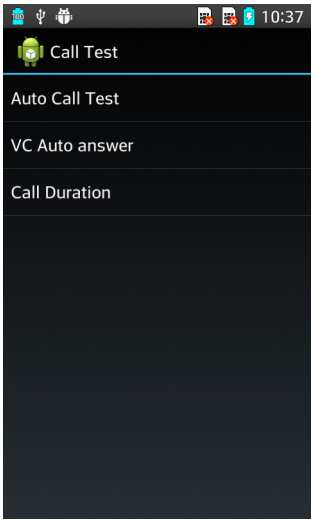	**Call Test**

Copyright © 2014 LG Electronics. Inc. All right reserved.
Only for training and service purposes

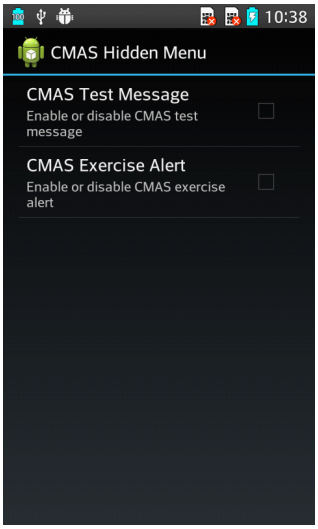	**CMAS_RMT**
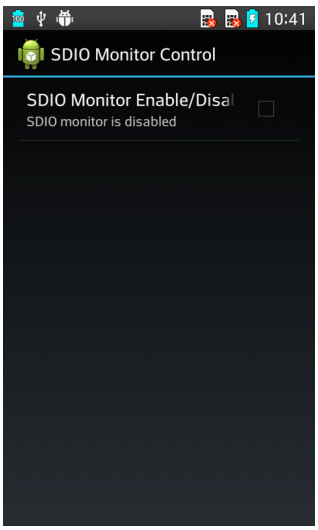	**SDIO Monitor Contorl**
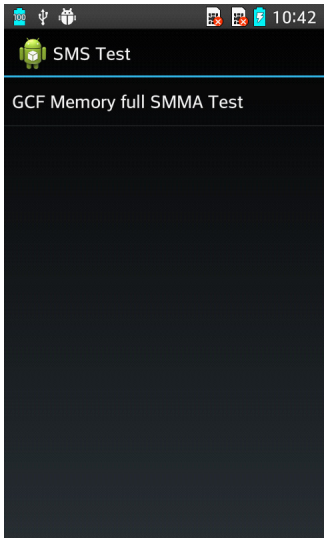	**SMS Test**

Copyright © 2014 LG Electronics. Inc. All right reserved.
Only for training and service purposes

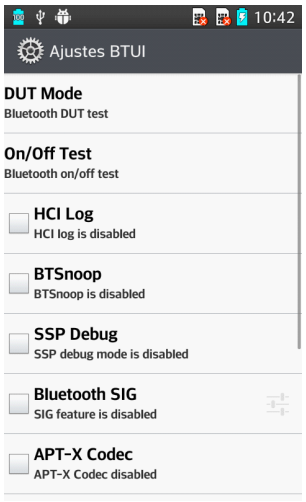	**BT_TEST**
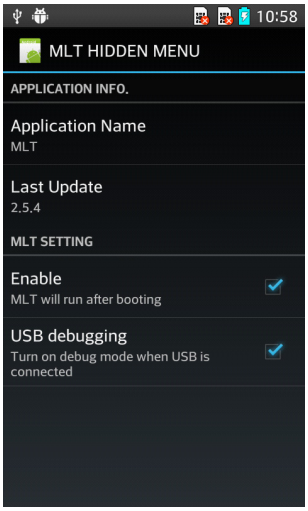	**MLT Test**
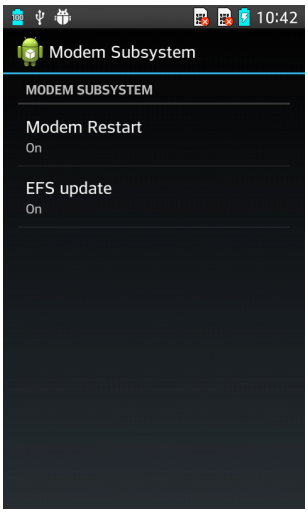	**Modem Subsystem**

Copyright © 2014 LG Electronics. Inc. All right reserved.
Only for training and service purposes

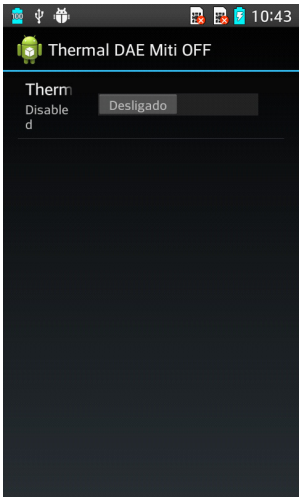	**Thermal Daemon Mitigation OFF**
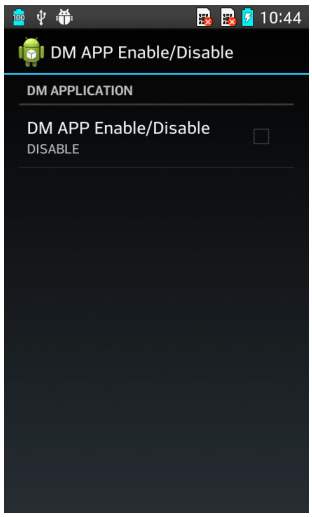	**DM APP Enable/Disable**
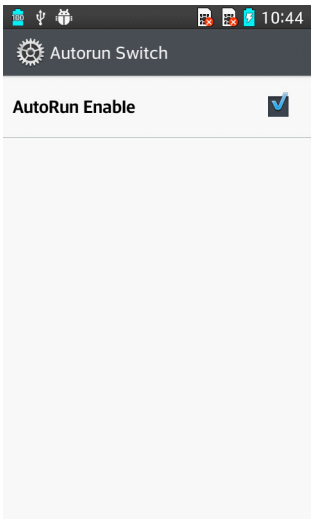	**Autorun Test**

Copyright © 2014 LG Electronics. Inc. All right reserved.
Only for training and service purposes

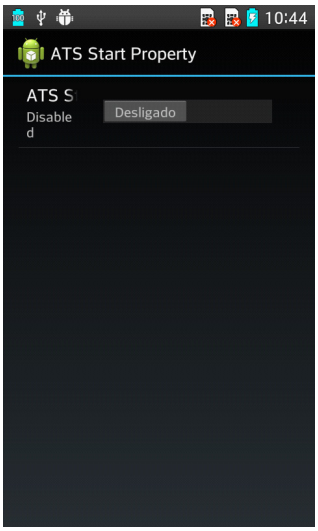	**ATS Start Property ON/OFF**
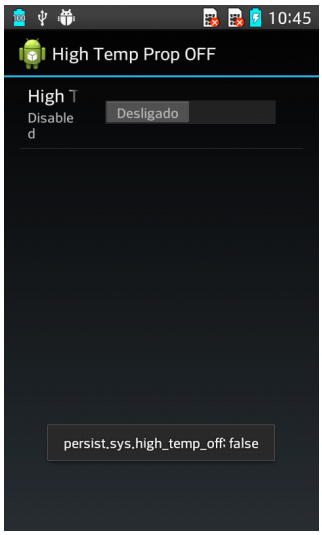	**Hiht Temperature Perperty OFF**
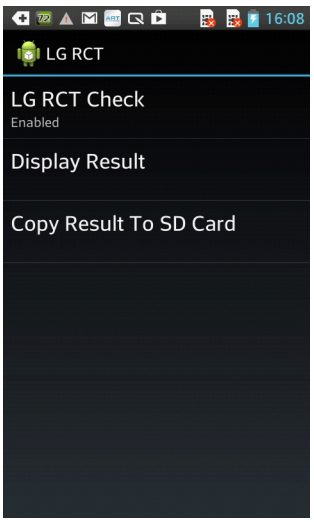	**LG RCT Test**

Copyright © 2014 LG Electronics. Inc. All right reserved.
Only for training and service purposes

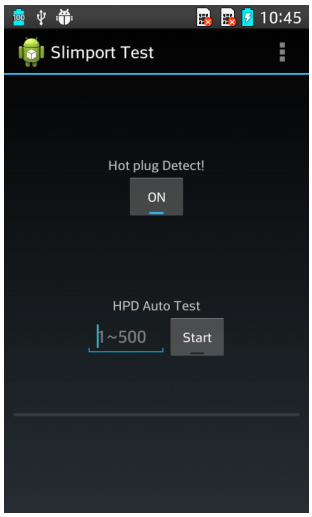	**Slimport Test**
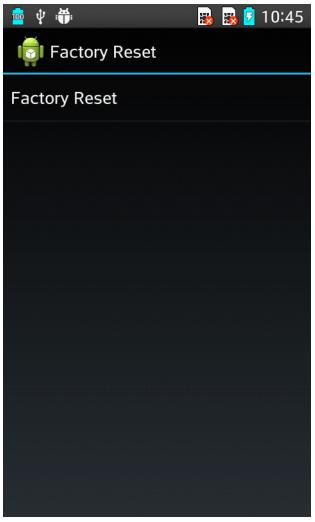	**Facroty Reset**
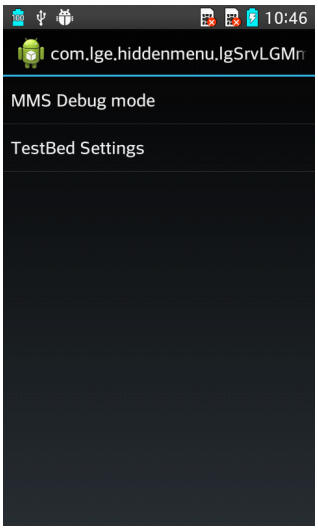	**MMS ? LG**

Copyright © 2014 LG Electronics. Inc. All right reserved.
Only for training and service purposes

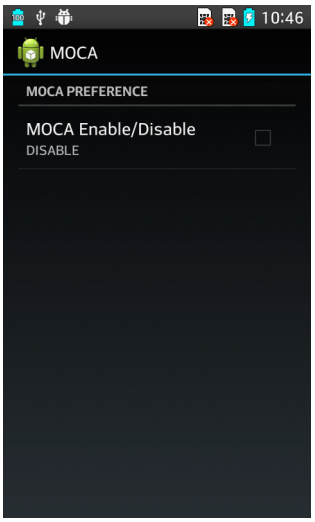	**MOCA**
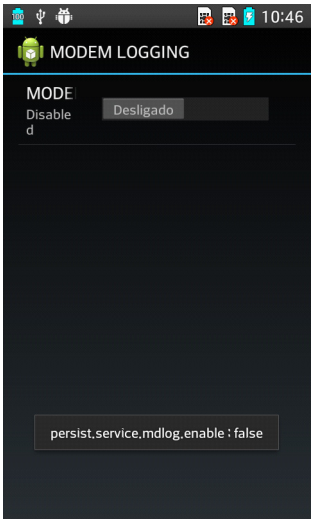	**Modem Log (QXDM Log)**

Copyright © 2014 LG Electronics. Inc. All right reserved.
Only for training and service purposes

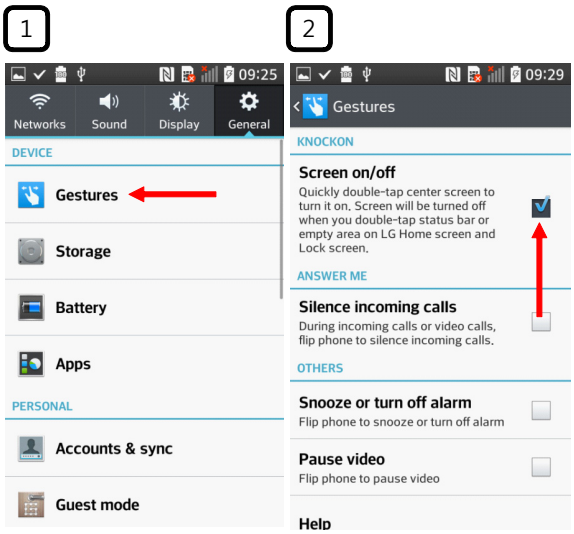

1. Knock On/Off Setting

Knock On Setting sequence :

1 -> 2

1. Execute 'System Settings' and Select 'General -> Gestures'
2. Check with 'Screen on/off' Item

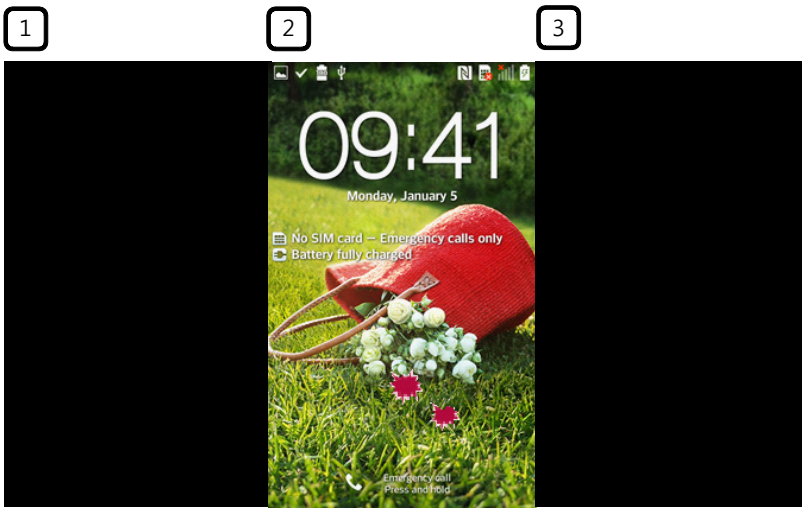

2. Knock On / Off

Knock On sequence :

1 -> 2 -> 3

1. Double-tab to phone to turn screen on regardless of tapping position and context
2. Double-tap Lock screen to turn screen off or empty area including status bar area on LG Home screen

** 'Screen off' is not working with 'talkback' or 'touch zoom'

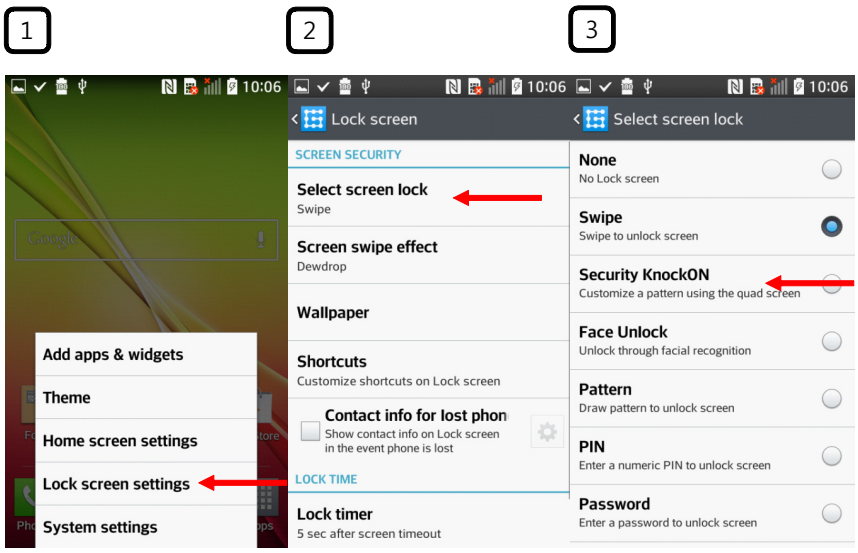

3. Knock Code Setting

Knock Code Setting sequence :

1 -> 2 ->3 -> 4 -> 5 -> 6

Through the following sequence, User can input customized pattern of quadrant screen

Copyright © 2014 LG Electronics. Inc. All right reserved.
Only for training and service purposes

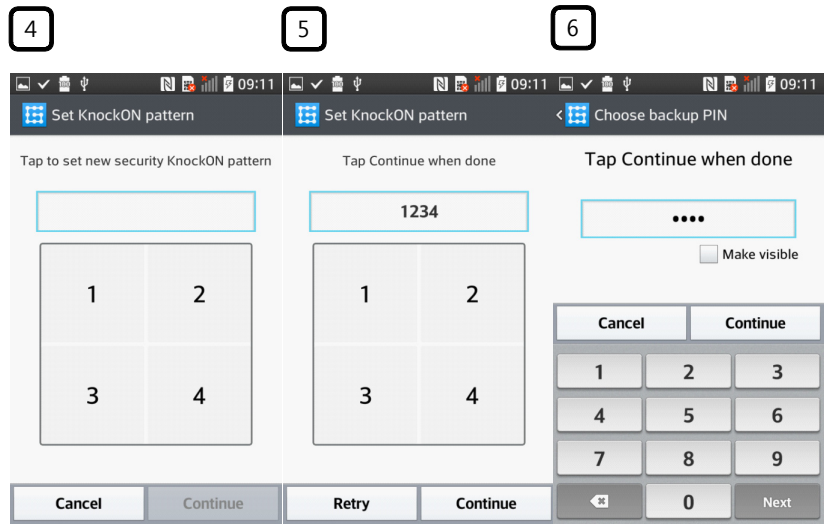

3. Knock Code Setting

Knock Code Setting sequence :

1 -> 2 -> 3 -> 4 -> 5 -> 6

Through the following sequence, User can input customized pattern of quadrant screen

** If user forgot Knock Code, User have to insert customized PIN Code. So step 6 is needed

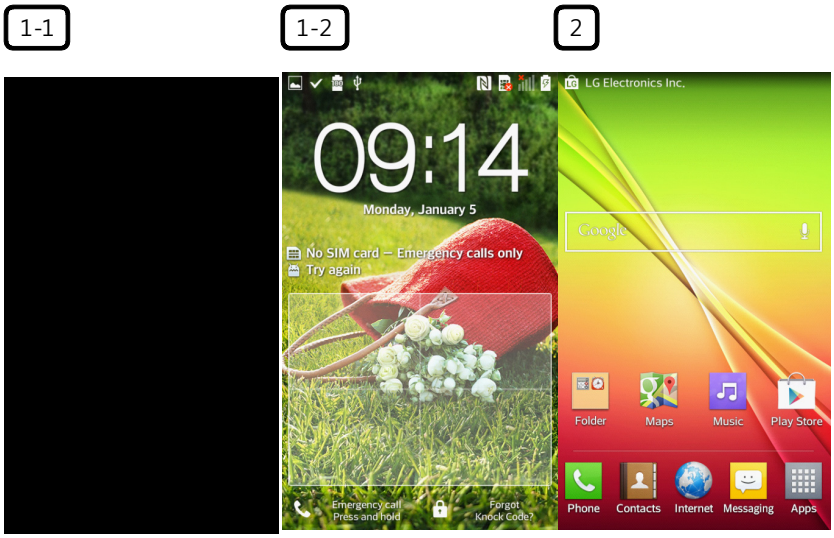

4. Knock Code

Knock Code sequence :

1-1 or 1-2 -> 2

User can wake up and unlock their device with customized pattern of quadrant screen.

** If user forgot Knock Code, User can unlock their device withcustomized PIN Code.

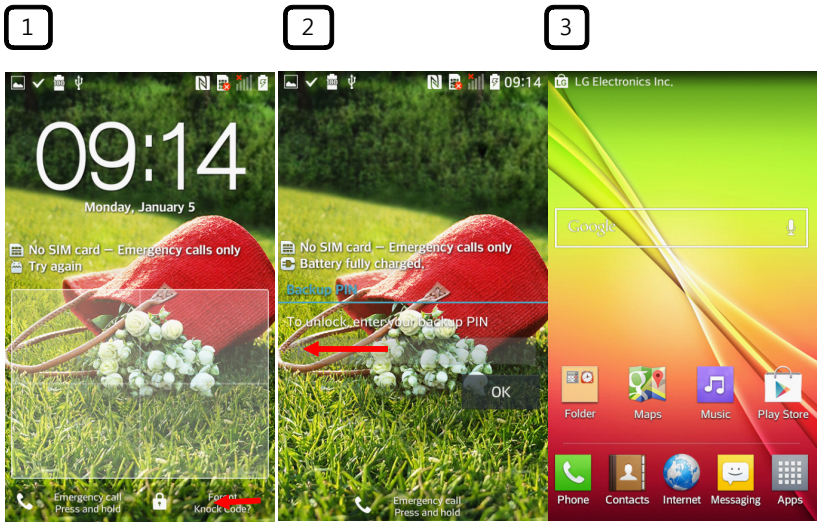

5. Knock Code : backup PIN

Knock Code PIN sequence :

1 -> 2 -> 3

If user forgot Knock Code, User can unlock their device with customized backup PIN Code.

Copyright © 2014 LG Electronics. Inc. All right reserved.
Only for training and service purposes

11. DISASSEMBLE GUIDE

1. Disassemble Battery Cover , Rear

Disassemble sequence :

1 -> 2 -> 3 -> 4

1

2

3

Copyright © 2014 LG Electronics. Inc. All right reserved.
Only for training and service purposes

4

1. Remove Battery Cover
2. Remove 11 Screws from Rear
3. Remove Rear Cover

2. Disassemble PCB

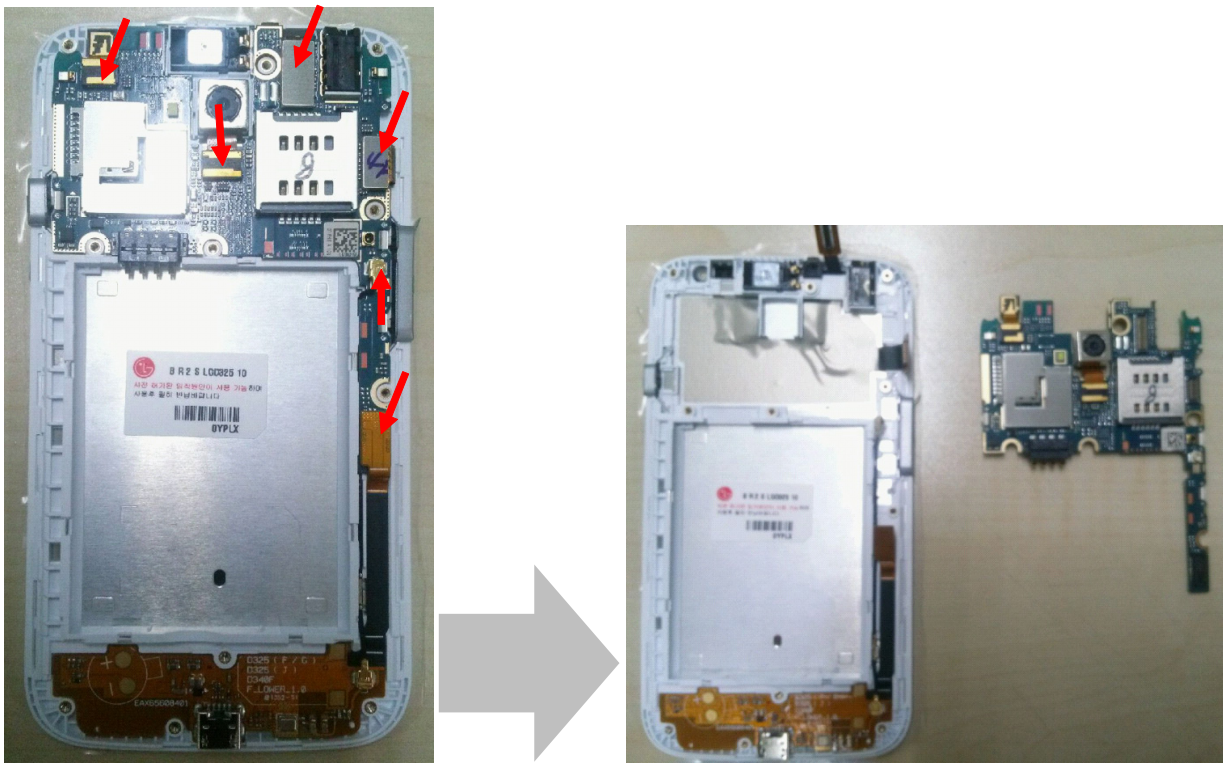

1. Remove Touch, LCD, FPCB, Camera Connector from PCB
2. Remove Coaxial Cable from PCB
3. Remove PCB

Copyright © 2014 LG Electronics. Inc. All right reserved.
Only for training and service purposes

3. Disassemble Camera, Key, Rubber

1. Remove Camera, Earjack
2. Remove Mic Top Rubber from Frame
3. Remove Power, Volume, and Quick memo key from Frame
4. Remove Coaxial Cable and Screw from Lower FPCB

Copyright © 2014 LG Electronics. Inc. All right reserved.
Only for training and service purposes

4. Disassemble FPCB

Remove Sub FPCB from Frame

5. Disassemble Touch Window

Copyright © 2014 LG Electronics. Inc. All right reserved.
Only for training and service purposes

1. Keep 50oC Chamber for 10 min.
2. Remove Window by using Window disassemble Jig.

6. Disassemble LCD

Copyright © 2014 LG Electronics. Inc. All right reserved.
Only for training and service purposes

12. EXPLODED VIEW & REPLACEMENT PART LIST

12.1 EXPLODED VIEW(SBOM)

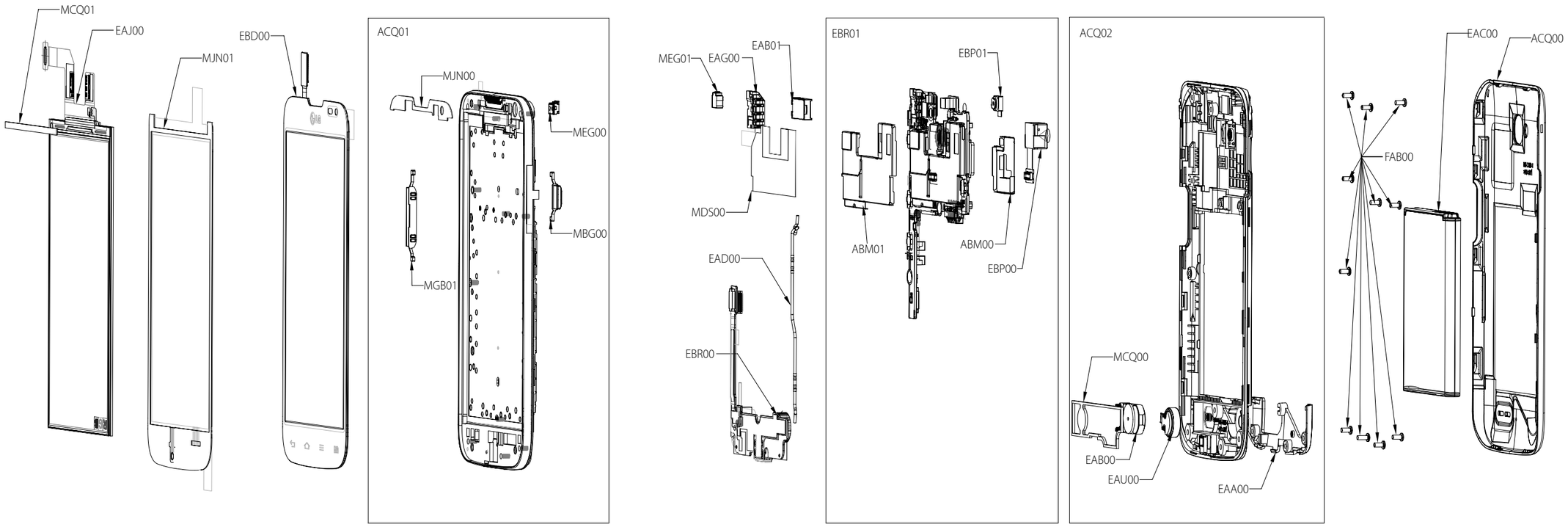

Location	Description	Location	Description
ACQ02	Cover Assembly,Rear	MJN00	Tape,Window
MCQ00	Damper	MEG00	Holder
EAU00	Motor,DC	MCQ01	Damper,LCD
EAB00	Speaker,Dual Mode	MDS00	Gasket
EAA00	PIFA Antenna,Multiple	MEG01	Holder
EAJ00	LCD,Module-TFT	MJN01	Tape,Window
EAG00	Jack,Phone	FAB00	Screw,Machine
EAD00	Cable,Assembly	EBR01	PCB Assembly,Main
EAB01	Receiver	ABM00	Can Assembly,Shield
EBD00	Touch Window Assembly	ABM01	Can Assembly,Shield
EBR00	PCB Assembly,Flexible	EBP00	Camera Module
ACQ01	Cover Assembly,Front	EBP01	Camera Module
MBG00	Button,Side	EAC00	Rechargeable Battery,Lithium Ion
MBG01	Button,Side	ACQ00	Cover Assembly,Battery

Copyright © 2014 LG Electronics. Inc. All right reserved.
Only for training and service purposes

12.2 Replacement Parts <Mechanic component>

Note: This Chapterisused for reference,Part order is ordered by SBOM standard on GCSC

Level	Location No.	Description	PartNumber	Spec	Remark
1	AGQ000000	Phone Assembly	AGQ87566102	LGD325.ACISBK BK:Black -	
2	MEZ002100	Label,Approval	MEZ65548701	COMPLEX LGD325.ACISWH ZZ:Without Color -	
2	ACQ100400	Cover Assembly,EMS	ACQ87168402	LGD325.ACISBK BK:Black -	
3	ACQ02	Cover Assembly,Rear	ACQ86840702	LGD325.ACISBK BK:BLACK BLACK D325_Rear_BK	
4	ACQ105800	Cover Assembly Rear(SVC)	ACQ86840802	LGD325.ACISBK BK:Black D325_Rear_BK	
5	MKC009400	Window,Camera	MKC64778901	CUTTING ACRYL LGD325F.ABRAWH BK:BLACK BLACK MR58 0.5T	
5	MJN089300	Tape,Window	MJN68632201	COMPLEX LGD325F.ABRAWH ZZ:Without Color Tape, Window, Camera	
5	MFB029600	Lens,Flash	MFB63272901	MOLD PC LGD325F.ABRAWH ZZ:Without Color PCSABIC	
5	MEZ000900	Label,After Service	MEZ64319901	COMPLEX LGF120L.ALGTWA ZZ:Without Color F120l AS Label	
5	MEG000000	Holder	MEG63540201	MOLD RUBBER LGD325F.ABRAWH ZZ:Without Color Cap, Mic_Main	
5	MCQ074200	Damper,Speaker	MCQ67525801	COMPLEX LGD325F.ABRAWH ZZ:Without Color -	
5	MCQ000000	Damper	MCQ67525701	COMPLEX LGD325F.ABRAWH ZZ:Without Color Pad, Receiver	
5	MCQ049800	Damper,Motor	MCQ67525601	COMPLEX LGD325F.ABRAWH ZZ:Without Color Pad, Motor	
5	MCQ009400	Damper,Camera	MCQ67487401	COMPLEX LGD325F.ABRAWH ZZ:Without Color Pad, Camera_Main	
5	MCK063300	Cover,Rear	MCK67928701	MOLD PC LGD325F.ABRAWH WH:WHITE WHITE -	

Copyright © 2014 LG Electronics. Inc. All right reserved.
Only for training and service purposes

Level	Location No.	Description	PartNumber	Spec	Remark
5	MDJ000000	Filter	MDJ63804902	COMPLEX LGD325.ACISBK ZZ:Without Color Grill, Speaker	
4	MCQ00	Damper	MCQ67525901	COMPLEX LGD325F.ABRAWH ZZ:Without Color Pad, Sealing, Speaker	
3	ACQ003400	Cover Assembly,Bar	ACQ86855202	LGD325.ACISBK BK:Black D325 BK Bar Assy	
7	ANT4,ANT5	Clip	MBV62562001	PRESS BECU 1.4 LGF300L.ALGTWH ZZ:Without Color -	
6	MJN000000	Tape	MJN68632301	COMPLEX LGD325F.ABRAWH ZZ:Without Color Tape, FPCB_Lower, Top	
6	MJN000001	Tape	MJN68670201	COMPLEX LGD325F.ABRAWH ZZ:Without Color Tape, FPCB_Lower, Left	
4	MEZ000000	Label	MLAZ0038301	COMPLEX LG-VX6000 ZZ:Without Color PID Label 4 Array PRINTING,	
4	ACQ01	Cover Assembly,Front	ACQ86840402	LGD325.ACISBK WH:WHITE WHITE -	
5	MJN020800	Tape,Decor	MJN68669101	COMPLEX LGD325F.ABRAWH ZZ:Without Color Tape, Deco_Receiver	
5	MJN000000	Tape	MJN68631901	COMPLEX LGD325F.ABRAWH ZZ:Without Color Tape, Earjack	
5	MJN000001	Tape	MJN68669301	COMPLEX LGD325F.ABRAWH ZZ:Without Color Tape, LCD FPCB	
5	MJN000002	Tape	MJN68728701	COMPLEX LGD325F.ABRAWH ZZ:Without Color -	
5	ACQ033200	Cover Assembly Front(Sub)	ACQ86855302	LGD325.ACISBK BK:Black -	
6	ADV076900	Frame Assembly,Sub	ADV74666201	LGD325F.ABRAWH ZY:Color Unfixed -	
7	MCK032701	Cover,Front	MCK67928801	PRESS STS 0.4 LGD325F.ABRAWH ZZ:Without Color Insert,SUS_Frame_1	
7	MCK032700	Cover,Front	MCK67912901	PRESS AL 0.5 LGD325F.ABRAWH ZZ:Without Color Insert,AL_Frame	
7	MJB000000	Stopper	MJB63369901	COMPLEX LGD325F.ABRAWH ZZ:Without Color sts304 rivet	

Copyright © 2014 LG Electronics. Inc. All right reserved.
Only for training and service purposes

Level	Location No.	Description	PartNumber	Spec	Remark
6	MCK032700	Cover,Front	MCK67912702	MOLD PC LGD325.ACISBK BK:Black PC_GF10	
6	MET099500	Insert,Nut	MICE0016904	COMPLEX MECH_COMMON ZZ:Without Color -	
5	MBG00	Button,Side	MBG64964301	COMPLEX LGD325F.ABRAWH WH:WHITE WHITE Button, Side_Power	
5	MBG01	Button,Side	MBG64964401	COMPLEX LGD325F.ABRAWH WH:WHITE WHITE Button, Side_Volume	
5	MCQ000000	Damper	MCQ67487301	COMPLEX LGD325F.ABRAWH ZZ:Without Color Pad, Receiver_Bracket	
5	MCQ000001	Damper	MCQ67589001	COMPLEX LGD325F.ABRAWH ZZ:Without Color -	
5	MCQ000002	Damper	MCQ67744301	COMPLEX LGD325.ACISWH ZZ:Without Color -	
5	MCR000000	Decor	MCR65267301	MOLD PC LGD325F.ABRAWH WH:WHITE WHITE -	
5	MCR000001	Decor	MCR65268201	COMPLEX LGD325F.ABRAWH WA:White -	
5	MJN00	Tape,Window	MJN68631801	COMPLEX LGD325F.ABRAWH ZZ:Without Color Tape, Window, Main_Top	
5	MEV000000	Insulator	MEV64715501	COMPLEX LGD325F.ABRAWH ZZ:Without Color -	
5	MEG00	Holder	MEG63540301	MOLD RUBBER LGD325F.ABRAWH ZZ:Without Color Cap, Sensor	
4	MCQ01	Damper,LCD	MCQ67487501	COMPLEX LGD325F.ABRAWH ZZ:Without Color Pad, LCD_D/IC	
4	MDS00	Gasket	MDS64431801	COMPLEX LGD325F.ABRAWH ZZ:Without Color Gasket, FPCB_LCD	
4	MEG01	Holder	MEG63540101	MOLD RUBBER LGD325F.ABRAWH ZZ:Without Color Cap, Mic_Sub	
4	MJN01	Tape,Window	MJN68669901	COMPLEX LGD325F.ABRAWH ZZ:Without Color Tape, Window, Main_Bottom	
4	MJN107400	Tape,USP Film	MJN68670001	COMPLEX LGD325F.ABRAWH ZY:Color Unfixed -	

Copyright © 2014 LG Electronics. Inc. All right reserved.
Only for training and service purposes

Level	Location No.	Description	PartNumber	Spec	Remark
4	MJN061100	Tape,Protect	MJN68670101	COMPLEX LGD325F.ABRAWH ZZ:Without Color Tape, Protection, Bar	
3	FAB00	Screw,Machine	FAB32119401	BH + 1.4M 3.7M SWCH18A WHITE N -	
6	SC1 SC10 SC2 SC4 SC6	Clip	MBV62321701	PRESS STS 301 0.15 LGLU6200.ALGTBK BK:Black -	
6	SC1 SC10 SC2 SC4 SC6	Clip	MBV62321701	PRESS STS 301 0.15 LGLU6200.ALGTBK BK:Black -	
5	PID1	Label	MEZ65049701	COMPLEX LGLS720.ASPRTS ZZ:Without Color PID label	
5	ABM00	Can Assembly,Shield	ABM74136501	LGD325F.ABRAWH ZZ:Without Color Can Assembly, Shield, BTM	
6	MBK070300	Can,Shield	MBK63632901	PRESS STS304 0.15 LGD325F.ABRAWH ZZ:Without Color Can, Shield_BTM	
6	MEV000000	Insulator	MEV64612401	COMPLEX LGD325F.ABRAWH ZZ:Without Color Can, Shield_BTM	
5	ABM01	Can Assembly,Shield	ABM74136401	LGD325F.ABRAWH ZZ:Without Color Can Assembly, Shield, Top	
6	MBK070300	Can,Shield	MBK63652501	PRESS SUS304 0.15 LGD325F.ABRAWH ZZ:Without Color STS304 1/2H	
6	MEV000000	Insulator	MEV64612301	COMPLEX LGD325F.ABRAWH ZZ:Without Color Can, Shield_Top	
5	MDS000000	Gasket	MDS64672001	COMPLEX LGD325.ACISWH ZZ:Without Color -	
1	AAD000000	Addition Assembly	AAD86709402	LGD325.ACISBK BK:Black -	
2	MEZ002100	Label,Approval	MEZ65228301	COMPLEX LGE988.ACISBK ZZ:Without Color E988_CIS_label	
2	ACQ00	Cover Assembly,Battery	ACQ87208302	LGD325.ACISBK BK:Black D325_Battery Cover_BK	
3	MCK004100	Cover,Battery	MCK68126702	MOLD PC LGD325.ACISBK BK:Black D325_Cover Battery_BK	

Copyright © 2014 LG Electronics. Inc. All right reserved.
Only for training and service purposes

Level	Location No.	Description	PartNumber	Spec	Remark
1	AGF000000	Package Assembly	AGF77219001	LGD325.ACISWH ZZ:Without Color D325 CIS(S6-1H/Pallet_480ea)	
2	MAF086500	Bag,Vinyl	MAF63267402	COMPLEX LGE615.ACISBK ZZ:Without Color HDPE Phone Bag_add CIS Mark_85X200	
2	MAY084000	Box,Unit	MAY66331603	COMPLEX LGD325.ACISWH ZZ:Without Color -	
2	AGJ000000	Pallet Assembly	AGJ73458304	LGE510.ACISBK ZZ:Without Color S6T Type_CIS Body+Cap+AL(1200x800x800)_480EA	
3	MAY010800	Box,Carton	MBEC0004405	COMPLEX LGE730.ACISBK ZZ:Without Color S6T-CIS Body(480EA/h:800 under/1200*800)	
3	MBL007000	Cap,Box	MCCL0002604	COMPLEX LGE730.ANLDKT ZZ:Without Color S6T-STD Cap(800EA/1200*800)	
3	MCQ000000	Damper	MCQ66486911	COMPLEX LGE730.ACISBK ZZ:Without Color S6T-CIS Dead Space Sleeve(480EA/1200*800)	
3	MGA000000	Pallet	MPCY0012403	COMPLEX KG800 FRABK DB:DARK BLUE -	
2	MEZ000000	Label	MLAZ0050901	COMPLEX KU990.AGBRBK ZZ:Without Color Battery Warning Label (Lithium ion Battery Label)	
2	MAY047100	Box,Master	MBEE0061004	COMPLEX LGE730.ANLDKT ZZ:Without Color S6T_STD Master Box(10EA)	
2	MEZ084100	Label,Unit Box	MEZ64571201	COMPLEX LGP725.ACISBK WW:SNOW WHITE Seal Label_CIS For Only	
2	MEZ084101	Label,Unit Box	MEZ64686921	COMPLEX LGP880.ACISBK ZZ:Without Color Unit Box Label_CIS Peel Cutting Label_40X20, 4EA	
2	MEZ003500	Label,Barcode	MLAC0004541	PRINTING HB620 KPNBK ZZ:Without Color GSM standard_unit box label_90*40	
2	MEZ047200	Label,Master Box	MLAJ0004402	PRINTING CG300 CGR DG ZZ:Without Color LABEL MASTER BOX(for CGR TDR 2VER. mbox_label) GSM standard_master box label	

Copyright © 2014 LG Electronics. Inc. All right reserved.
Only for training and service purposes

12.2 Replacement Parts <Main component>

Note: This Chapterisused for reference, Part order is ordered by SBOM standard on GCSC

Level	Location No.	Description	PartNumber	Spec	Remark
5	EAA030100	PIFA Antenna,Multiple	EAA63187101	LS01-I-13094-A0 MULTI -5DB 5:1 FPCB Type - WLAN+BT Tape LS Mtron Ltd.	
5	EAA030101	PIFA Antenna,GPS	EAA63187201	LS01-I-13093-A0 SINGLE -5DB 5:1 FPCB Type - GPS Tape LS Mtron Ltd.	
4	EAU00	Motor,DC	EAU62303401	TLE-1030MF 3V 100mA 0A 12KRPM 0RPM 0SEC 0GF.CM 34OHM	
4	EAB00	Speaker,Dual Mode	EAB62653201	EMS1810TPB8P Nd-Fe-B 700mW 8OHM 90DB 850HZ 18.0 X 10.0 X 3.0T SPRING EM-TECH	
4	EAA00	PIFA Antenna,Multiple	EAA63405701	BMI14A008 MULTI -5DB 5:1 IMA Type - Main Carrier AT&C CO.,LTD	
4	EAJ00	LCD,Module-TFT	EAJ62590001	LM450MN1A WVGA 4.5INCH 480X800 450CD COLOR 70% 15/9 Typ 1000:1 60Hz Inverter N LED 2D - TOVIS	
4	EAG00	Jack,Phone	EAG63515401	HG05-AB3555 5P 4P STRAIGHT R/TP 3.5M BLACK 5P - HYUPJIN I&C CO.,LTD.	
4	EAD00	Cable,Assembly	EAD62671801	80409-202B-74L-1 UFL-LP-066 UFL-LP-066 0.06M 1 BLACK N N I-PEX CO., LTD	
4	EAB01	Receiver	EAB62888201	EMR1307SWB4 30mW 32OHM 107DB 300HZTO7KHZ PIN - EM-TECH	
4	EBD00	Touch Window Assembly	EBD61726302	TSMC-B408B CAPACITIVE TOUCH GFF 305 Stack Up Melfas 134S 4.5 B to B Black Color LG INNOTEK.,LTD.	
4	EBR00	PCB Assembly,Flexible	EBR77978001	LGD325F.ABRAWH 1.0 Flexible	
5	EBR070400	PCB Assembly Flexible,SMT	EBR77978101	LGD325F.ABRAWH 1.0 Flexible	
6	EBR070300	PCB Assembly Flexible,SMT Top	EBR78021001	LGD325F.ABRAWH 1.0 Flexible	
7	EAX010700	PCB,Flexible	EAX65608401	LGD325.ACISWH 1.1 POLYI Multi 6 0.45 Flexible	

Copyright © 2014 LG Electronics. Inc. All right reserved.
Only for training and service purposes

Level	Location No.	Description	PartNumber	Spec	Remark
7	CN3	Connector,BtoB	ENBY0040601	GB042-30P-H10-E3000 - 0.40MM STRAIGHT MALE SMD R/TP - - LS Mtron Ltd.	
6	EBR070200	PCB Assembly Flexible,SMT Bottom	EBR78038201	LGD325F.ABRAWH 1.1 Flexible	
7	L2,L3	Resistor,Chip	ERHZ0000701	MCR03EZP5J000 0OHM 5% 1/10W 1608 R/TP - ROHM.	
7	C33	Capacitor(High Frequency),Ceramic,Chip	EAE62946901	GRM0335C1E8R2B_H 8.2pF 0.1PF 25V C0G - 55TO+125C 0603 R/TP 0.3+-0.03 L:0.6+-0.03 W:0.3+-0.03 T:0.3+-0.03 MURATA MANUFACTURING CO.,LTD.	
7	C21	Capacitor Ceramic,Chip	ECCH0017401	CL21B105KBFNNNE 1uF 10% 50V X7R - 55TO+125C 2012 R/TP 1.25MM - SAMSUNG ELECTRO-MECHANICS CO., LTD.	
7	C19 C3 C34	Capacitor Ceramic,Chip	ECCH0000115	MCH155A220JK 22pF 5% 50V NP0 -55TO+125C 1005 R/TP - ROHM Semiconductor KOREA CORPORATION	
7	FB1	Filter,Bead	SFBH0008102	BLM15HD182SN1D 1800 ohm 1.0X0.5X0.5 25% 2.2 ohm 0.2A SMD R/TP 2P 0 MURATA MANUFACTURING CO.,LTD.	
7	C15 C16	Capacitor Ceramic,Chip	ECZH0025916	GRM0335C1E330J 33pF 5% 25V NP0 - 55TO+125C 0603 R/TP - MURATA MANUFACTURING CO.,LTD.	
7	CN4	Connector,I/O	EAG63090001	04-5161-005-100-868 7P 0.90MM ANGLE RECEPTACLE DIP R/TP Normal New IO Connector KYOCERA ELCO KOREA SALES CO.,LTD.	
7	C29	Capacitor Ceramic,Chip	ECCH0000161	MCH153CN333KK 33nF 10% 16V X7R - 55TO+125C 1005 R/TP - - ROHM Semiconductor KOREA CORPORATION	
7	ZD1 ZD2	Diode,TVS	EDTY0009101	ESD9X5.0ST5G 5V 6.2 12.3V 8.7A 107W SOD528 R/TP 2P 1 ON SEMICONDUCTOR	
7	D1 D2	Varistor	SEVY0008101	EVLC5S01033 EVLC5S01033 EVLC5S01033,5.5 V, ,SMD ,Vdc 5.5, Vb 10~15.6, Cp 17.9 at 1MHz, 0.6*0.3*0.33 , ,5.5 , ,23.1~42.9 ,0.6*0.3*0.33 ,[empty] ,SMD ,R/TP AMOTECH CO., LTD. AMOTECH CO., LTD.	
7	FL2	Filter,EMI/Power	EAM62272401	ICMEF112P500MFR COMMON MODE NOISE FILTER 0HZ 0.0000000000001F 0H SMD R/TP - INNOCHIPS TECHNOLOGY	

Copyright © 2014 LG Electronics. Inc. All right reserved.
Only for training and service purposes

Level	Location No.	Description	PartNumber	Spec	Remark
7	FL1	Filter,EMI/Power	EAM62790301	NFM18PC225B1A3D_ EMI - 0.0000022F 0H SMD R/TP size : 1.6x0.8x0.6 (3 terminal cap) MURATA MANUFACTURING CO.,LTD.	
7	D6	Diode,TVS	EAH61872601	PESD12VS1UA 12V 13.3V min. 19V 22.5A 360mW SOD323 R/TP 2P 1 NXP Semiconductors	
7	L4,L5	Inductor Multilayer,Chip	ELCH0001425	LL1005-FHL82NJ 82NH 5% - 150mA 1.9OHM 1.15GHZ 10 SHIELD NONE 1.0X0.5X0.5MM R/TP TOKO, INC.	
7	D5	Varistor	SEVY0008102	EVLC5S01015 5.5V 0% 15pF 0.6*0.3*0.33 NONE SMD R/TP AMOTECH CO., LTD.	
7	SW2	Connector,RF	ENWY0005501	20279-001E-01 NONE STRAIGHT SOCKET SMD R/TP AU 50OHM 400mDB I-PEX CO., LTD	
7	C13 C14 C30	Capacitor Ceramic,Chip	ECCH0009103	C0603C0G1H101JT00NN 100pF 5% 50V C0G - 55TO+125C 0603 R/TP - - TDK CORPORATION	
7	MIC1	Microphone Condenser	EAB62911301	S17OT423-001 -42DB 150OHM OMNI 1.5 TO 3.6V 3.10 * 2.5 * 1.1T SMD GoerTek Inc.	
7	R4	Resistor,Chip	ERHY0009527	MCR006YZPJ473 47KOHM 5% 1/20W 0603 R/TP - ROHM.	
7	C20	Capacitor Ceramic,Chip	EAE62685301	CL05A105KA5NQNC 1uF 10% 25V X5R - 55TO+85C 1005 R/TP 0.6T max. Samsung(1.0+-0.1 0.5+-0.1 0.5+-0.1) Murata (1.0+-0.05 0.5+-0.05 0.5+-0.05) SAMSUNG ELECTRO-MECHANICS CO., LTD.	
7	C11	Capacitor(High Frequency),Ceramic,Chip	EAE62882601	GRM1555C1H1R0C_H 1pF 0.25PF 50V C0G - 55TO+125C 1005 R/TP 0.5+/-0.05 L:1.0+-0.05 W:0.5+-0.05 T:0.5+-0.05 MURATA MANUFACTURING CO.,LTD.	
7	C17	Capacitor Ceramic,Chip	ECCH0002001	C1005JB0J104KT000F 0.1uF 10% 6.3V X5R - 30TO+85C 1005 R/TP - - TDK CORPORATION	
7	C9	Capacitor Ceramic,Chip	ECZH0000813	C1005C0G1H101JT 100pF 5% 50V C0G - 55TO+125C 1005 R/TP - TDK KOREA COOPERATION	
7	C35	Capacitor Ceramic,Chip	ECCH0007804	CL05A225MP5NSNC 2.2uF 20% 10V X5R - 55TO+85C 1005 R/TP 0.5MM - SAMSUNG ELECTRO-MECHANICS CO., LTD.	

Copyright © 2014 LG Electronics. Inc. All right reserved.
Only for training and service purposes

Level	Location No.	Description	PartNumber	Spec	Remark
5	EBR070100	PCB Assembly Flexible,Insert	EBR78736701	LGD325F.ABRAWH 1.0 Flexible	
3	EBR01	PCB Assembly,Main	EBR78721201	LGD325.ACISWH 1.0 Main	
4	EBR071800	PCB Assembly Main,SMT	EBR78721301	LGD325.ACISWH 1.0 Main	
5	EBR071600	PCB Assembly Main,SMT Bottom	EBR78730101	LGD325.ACISWH 1.1 Main	
6	C4210 C4211 C4214	Resistor,Chip	ERHZ0000406	MCR01MZP5J104 100KOHM 5% 1/16W 1005 R/TP - ROHM.	
6	C1000 L1033	Inductor Multilayer,Chip	ELCH0003831	LQG15HS1N0S02D 1NH 0.3NH - 300mA - - 0.07OHM 10GHZ 8 SHIELD NONE 1.0X0.5X0.5MM R/TP MURATA MANUFACTURING CO.,LTD.	
6	ZD8000 ZD8001 ZD8003	Varistor	SEVY0004401	ICVL0518400V500FR 18V 0% 40pF 1.0*0.5*0.55 NONE SMD R/TP INNOCHIPS TECHNOLOGY	
6	C2108 C2316 C2317 C2323 C2325 C2327 C2328 C2330 C2331 C2332 C2333 C2336 C2337 C2338 C2342 C2343 C2344 C2351 C2352 C2353 C2354 C2372 C2373	Capacitor Ceramic,Chip	ECCH0009101	C0603X5R0J104KT00NN 0.1uF 10% 6.3V X5R - 55TO+85C 0603 R/TP - TDK CORPORATION	
6	C1047 R4003 R4901 R9010	Resistor,Chip	ERHZ0000401	MCR01MZSJ000 0OHM 5% 1/16W 1005 R/TP - ROHM.	

Copyright © 2014 LG Electronics. Inc. All right reserved.
Only for training and service purposes

Level	Location No.	Description	PartNumber	Spec	Remark
6	C10002 C10004 C10007 C10009	Capacitor(High Frequency),Ceramic,Chip	EAE62947001	GRM0335C1E100J_H 10pF 5% 25V C0G -55TO+125C 0603 R/TP 0.3+-0.03 :0.6+-0.03 W:0.3+-0.03 T:0.3+-0.03 MURATA MANUFACTURING CO.,LTD.	
6	CN12000	Connector,BtoB	ENBY0040701	GB042-30S-H10-E3000 30P 0.4MM STRAIGHT FEMALE SMD R/TP 1M - LS Mtron Ltd.	
6	C10001 C2310 C8009 C8010 C8017 C8018	Capacitor Ceramic,Chip	ECCH0000198	CL05A225MQ5NSNC 2.2uF 20% 6.3V X5R -55TO+85C 1005 R/TP . SAMSUNG ELECTRO-MECHANICS CO., LTD.	
6	FL8000 FL8003 FL8004	Filter,EMI/Power	SFEY0015901	ICMEF214P101MFR ICMEF214P101MFR ICMEF214P101MFR,SMD ,ESD Common mode Filter INNOCHIPS TECHNOLOGY INNOCHIPS TECHNOLOGY	
6	R7012	Resistor,Chip	ERHY0009526	MCR006YZPJ472 4.7KOHM 5% 1/20W 0603 R/TP - ROHM.	
6	R9014	Resistor,Chip	ERHZ0000211	MCR01MZP5F1201 1.2KOHM 1% 1/16W 1005 R/TP - ROHM.	
6	C4182 C4189 C7051 C7204 C8003 C8006	Capacitor Ceramic,Chip	EAE62762301	CL03A105MP3NSNC 1uF 20% 10V X5R -55TO+85C 0603 R/TP 0.33 MM - SAMSUNG ELECTRO-MECHANICS CO., LTD.	
6	C2318 C2319 C2320 C2349 C2350	Capacitor Ceramic,Chip	ECCH0009106	C0603X7R1C103KT 10nF 10% 10V X7R -55TO+125C 0603 R/TP - TDK CORPORATION	
6	R10008	Resistor,Chip	ERHY0009506	MCR006YZPJ104 100KOHM 5% 1/20W 0603 R/TP - ROHM.	
6	C2367 C2368 C2369 C9021	Capacitor Ceramic,Chip	EAE62282201	GRM033R71E102KA01D 0.000000001F 10% 25V X7R -55TO+125C 0603 R/TP 0.3+/-0.03 MM - MURATA MANUFACTURING CO.,LTD.	
6	D5	Varistor	SEVY0008102	EVLC5S01015 5.5V 0% 15pF 0.6*0.3*0.33 NONE SMD R/TP AMOTECH CO., LTD.	

Copyright © 2014 LG Electronics. Inc. All right reserved.
Only for training and service purposes

Level	Location No.	Description	PartNumber	Spec	Remark
6	C10005 C10006 C2324 C2341 C2347 C4183 C4186 C7205	Capacitor Ceramic,Chip	ECCH0017301	CL03A105MQ3CSNH 0.000001F 20% 6.3V X5R -45TO+85C 0603 R/TP - SAMSUNG ELECTRO-MECHANICS CO., LTD.	
6	U4134	IC,LDO Voltage Regulator	EAN62512901	TLV70730PDQNR V2 to V5.5 V3.0 0W QFN R/TP 4P EUSY0373901 RP103K301D-TR. RICHO PIN TO PIN TEXAS INSTRUMENTS KOREA LTD, HONGKONG BRANCH.	
6	C15,C16	Capacitor Ceramic,Chip	ECZH0025916	GRM0335C1E330J 33pF 5% 25V NP0 -55TO+125C 0603 R/TP - MURATA MANUFACTURING CO.,LTD.	
6	D10001	Varistor	SEVY0007901	ICVS0505481FR 5.6V 0% 480F 1.0*0.5*0.55 NONE SMD R/TP INNOCHIPS TECHNOLOGY	
6	C8016	Capacitor Ceramic,Chip	ECCH0004904	GRM155R60J105K 1uF 10% 6.3V X5R -55TO+85C 1005 R/TP - MURATA MANUFACTURING CO.,LTD.	
6	L9000 L9002	Inductor,Wire Wound,Chip	ELCH0003806	LQW18AN82NG00D 82NH 2% - 250mA 0.6OHM 2KHZ 34 NON SHIELD 1.6X0.8X0.8MM - R/TP MURATA MANUFACTURING CO.,LTD.	
6	VA12007 VA8002 VA8003 ZD8004	Varistor	SEVY0003601	ICVL0505101V150FR 5.6V 0% 100pF 1.0*0.5*0.55 NONE SMD R/TP INNOCHIPS TECHNOLOGY	
6	L8000	Inductor,Wire Wound,Chip	EAP62106301	1239AS-H-100N=P2 10UH 30% 30V 700mA 1 0.7 0.46OHM - - SHIELD 2.5X2.0X1.2MM NONE R/TP TOKO, INC.	
6	CN8002	Connector,BtoB	ENBY0039601	GB042-20S-H10-E3000 20P 0.4MM STRAIGHT SOCKET SMD R/TP 1M - LS Mtron Ltd.	
6	U4133 U4136	IC,LDO Voltage Regulator	EAN62669801	TLV70728PDQNR V2 to V5.5 V2.8 0W QFN R/TP 4P - TEXAS INSTRUMENTS KOREA LTD, HONGKONG BRANCH.	
6	L1037	Inductor Multilayer,Chip	ELCH0003836	LQG15HS5N6S02D 5.6NH 0.3NH - 300mA - - 0.2OHM 4.5GHZ 8 SHIELD NONE 1.0X0.5X0.5MM R/TP MURATA MANUFACTURING CO.,LTD.	

Copyright © 2014 LG Electronics. Inc. All right reserved.
Only for training and service purposes

Level	Location No.	Description	PartNumber	Spec	Remark
6	CN72000	Connector,BtoB	EAG63393001	BM10NB(0.8)-40DS-0.4V 40P 0.40MM STRAIGHT FEMALE SMD R/TP 800mM - HIROSE KOREA CO.,LTD	
6	C7048	Capacitor TA,Conformal	EAE62748401	F981A476MSAFZH 47uF 20% 10V 9.4UA - 55TO+125C 5OHM 2.2X1.25X0.9MM NONE SMD R/TP 0.9T max. UNITEL ELECTRONICS CO. LTD.	
6	R8012	Resistor,Chip	ERHY0009507	MCR006YZPJ105 1MOHM 5% 1/20W 0603 R/TP - ROHM.	
6	C2313 C2314	Capacitor Ceramic,Chip	ECCH0009230	GRM033R61A222K 2.2nF 10% 25V X5R - 55TO+85C 0603 R/TP - - MURATA MANUFACTURING CO.,LTD.	
6	C9	Capacitor Ceramic,Chip	ECZH0000813	C1005C0G1H101JT 100pF 5% 50V C0G - 55TO+125C 1005 R/TP - TDK KOREA COOPERATION	
6	C9019 C9020 C9027	Capacitor Ceramic,Chip	ECZH0000830	C1005C0G1H330JT000F 33pF 5% 50V NP0 - 55TO+125C 1005 R/TP - TDK KOREA COOPERATION	
6	VA9601 VA9602 VA9603 VA9604 VA9605	Varistor	SEVY0005101	ICVL0518050FR 18V 0% 5F 1.0*0.5*0.55 NONE SMD R/TP INNOCHIPS TECHNOLOGY	
6	R2208 R2209	Resistor,Chip	ERHY0009516	MCR006YZPJ222 2.2KOHM 5% 1/20W 0603 R/TP - ROHM.	
6	R12006	Resistor,Chip	ERHY0009536	MCR006YZPF1003 100KOHM 1% 1/20W 0603 R/TP - ROHM.	
6	C2312 C2329 C2346 C2364 C2365	Capacitor Ceramic,Chip	ECCH0009228	GRM033R61A472K 4700pF 10% 10V X5R - 55TO+85C 0603 R/TP - - MURATA MANUFACTURING CO.,LTD.	
6	R10000 R10001	Resistor,Chip	ERHY0042402	RC0201JR-0715KL 15KOHM 5% 1/20W 0603 R/TP - YAGEO CORPORATION	
6	C12000 C12001 C12005	Capacitor Ceramic,Chip	EAE62962301	GRM155R61A225KE95 2.2uF -10TO+10% 10V X5R -55TO+85C 1005 R/TP 0.5 L:1.0+-0.05 W:0.5+-0.05 T:0.5+-0.05 MURATA MANUFACTURING CO.,LTD.	
6	C13 C14 C30	Capacitor Ceramic,Chip	ECCH0009103	C0603C0G1H101JT00NN 100pF 5% 50V C0G - 55TO+125C 0603 R/TP - - TDK CORPORATION	

Copyright © 2014 LG Electronics. Inc. All right reserved.
Only for training and service purposes

Level	Location No.	Description	PartNumber	Spec	Remark
6	R2101	Resistor,Chip	ERHZ0000250	MCR01MZP5F2400 240OHM 1% 1/16W 1005 R/TP - ROHM.	
6	C8008 C8011	Capacitor Ceramic,Chip	ECCH0017601	CL05A475MQ5NRNC 4.7uF 20% 6.3V X5R -55TO+85C 1005 R/TP 0.5MM - SAMSUNG ELECTRO-MECHANICS CO., LTD.	
6	FB1	Filter,Bead	SFBH0008102	BLM15HD182SN1D 1800 ohm 1.0X0.5X0.5 25% 2.2 ohm 0.2A SMD R/TP 2P 0 MURATA MANUFACTURING CO.,LTD.	
6	LD8000	LED,Flash	EAV62175401	ELCH07-5565J6J7294010-N8(LM) WHITE 2.95~4.05V 1.5A(Pulse) 350mA(DC) 200lm(Min) 240lm(Typ) X(0.3084~0.3325) Y(0.3003~0.3967) 6W(Pulse Mode) 2016 R/TP 2P - EVERLIGHT ELECTRONICS CO., LTD.	
6	C2315 C2348	Capacitor Ceramic,Chip	ECCH0034801	CL03A474MQ3NNNH 0.47uF -20TO20% 6.3V X5R -55TO+85C 0603 R/TP 0.3+-0.03 - SAMSUNG ELECTRO-MECHANICS CO., LTD.	
6	FL8001 FL8002	Filter,EMI/Power	SFEY0016301	ICMEF112P900M COMMON MODE NOISE FILTER 0HZ 0F 0H SMD R/TP INNOCHIPS TECHNOLOGY	
6	R10013 R7006 R8005 R8011 R9015 R9022 R9026	Resistor,Chip	ERHY0009501	MCR006YZPJ000 0OHM 5% 1/20W 0603 R/TP - ROHM.	
6	ANT11001 CN1001	C-Clip	EAG63670501	PMT1023 1P ANT TERMINAL STRAIGHT SMD T/REEL AU 3.0X1.5X1.3(LXWXH) SERVEONE CO., LTD.	
6	FB8001	Filter,Bead	SFBH0008101	BLM15AG601SN1D 600 ohm 1.0X0.5X0.5 25% 0.6 ohm 0.3A SMD R/TP 2P 0 MURATA MANUFACTURING CO.,LTD.	
6	ZD6603	Diode,TVS	EAH61693001	uClamp0541Z 5V 6V min 12V 2A 30W SLP0603P2X3 R/TP 2P 1 SEMTECH INTERNATIONAL AG	
6	R7007	Resistor,Chip	ERHZ0000222	MCR01MZP5F1503 150KOHM 1% 1/16W 1005 R/TP - ROHM.	
6	C2363	Capacitor Ceramic,Chip	EAE62927201	ADK107BBJ476MA 47uF -20TO20% 4V X5R -55TO+85C 1608 R/TP 0.8T +0.2 L:1.6+0.2 W:0.8+0.2 T:0.8+0.2 KOREA TAIYO YUDEN.CO., LTD.	

Copyright © 2014 LG Electronics. Inc. All right reserved.
Only for training and service purposes

Level	Location No.	Description	PartNumber	Spec	Remark
6	ZD6605	Varistor	SEVY0005201	EVLC5S02050 5.5V 0% 50F 1.0*0.5*0.6 - SMD R/TP AMOTECH CO., LTD.	
6	D12001 D12002	Capacitor Ceramic,Chip	ECCH0009104	C0603C0G1H330JT00NN 33pF 5% 50V C0G - 55TO+125C 0603 R/TP - TDK CORPORATION	
6	VA7000	Varistor	SEVY0010501	IECS0505C040FR 10V 0% 4E-12F 1.0x0.5x0.3 IEC61000-4-1 (ESD) level #4 SMD R/TP INNOCHIPS TECHNOLOGY	
6	C4128	Capacitor Ceramic,Chip	ECCH0017501	CL10A226MQ8NRNE 22uF 20% 6.3V X5R - 55TO+85C 1608 R/TP 0.8MM - SAMSUNG ELECTRO-MECHANICS CO., LTD.	
6	R10010 R10011	Resistor,Chip	ERHY0009502	MCR006YZPJ100 10OHM 5% 1/20W 0603 R/TP - ROHM.	
6	ZD7001	Diode,Zener	EDNY0013602	EDZVT2R5.1B 4.98V 4.98TO5.2V 80OHM 150mW EMD2 R/TP 2P 1 ROHM Semiconductor KOREA CORPORATION	
6	C8013	Capacitor Ceramic,Chip	EAE62505701	CL10A105KB8NNNC 1uF 10% 50V X5R - 55TO+85C 1608 R/TP 0.9T max. - SAMSUNG ELECTRO-MECHANICS CO., LTD.	
6	SW1001	Connector,RF	ENWY0008701	MS-156C NONE STRAIGHT SOCKET SMD T/REEL AU 50OHM 400mDB HIROSE KOREA CO.,LTD	
6	C9028	Capacitor Ceramic,Chip	ECCH0009231	GRM033R71C471K 470pF 10% 16V X7R - 55TO+125C 0603 R/TP - - MURATA MANUFACTURING CO.,LTD.	
6	C7049 C8004 C8007	Capacitor Ceramic,Chip	EAE62286801	CL03A104KP3NNNC 0.0000001F 10% 10V X5R - 55TO+85C 0603 R/TP 0.3 - SAMSUNG ELECTRO-MECHANICS CO., LTD.	
6	L5107	Inductor Multilayer,Chip	ELCH0004727	1005GC2TR10JLF 100NH 5% - 100mA 2.3OHM 600MHZ 8 SHIELD NONE 1.0X0.5X0.5MM R/TP PILKOR ELECTRONICS LTD.	
6	CN8001	Connector,BtoB	ENBY0034201	GB042-24S-H10-E3000 24P 0.40MM STRAIGHT SOCKET SMD R/TP 1M - LS Mtron Ltd.	
6	R7011	Resistor,Chip	EBC62235801	RC0603F363CS 36KOHM 1% 1/20W 0603 R/TP - SAMSUNG ELECTRO-MECHANICS CO., LTD.	
6	C4157	Capacitor Ceramic,Chip	ECCH0009603	CE JMK212 BJ476MG-T 47uF 20% 6.3V X5R - 55TO+85C 2012 R/TP 1.25mm - TAIYO YUDEN CO.,LTD	

Copyright © 2014 LG Electronics. Inc. All right reserved.
Only for training and service purposes

Level	Location No.	Description	PartNumber	Spec	Remark
6	R9013	Resistor,Chip	ERHY0009302	MCR006YZPF1001 1KOHM 1% 1/20W 0603 R/TP - ROHM.	
6	D8000	Diode,Schottky	EAH61992701	PMEG6002EB 600mV 60V 200mA 0SEC 20pF 0W SOD523 R/TP 2P 1 NXP Semiconductors	
6	R7015	Resistor,Chip	ERHY0009543	MCR006YZPJ121 120OHM 5% 1/20W 0603 R/TP - ROHM.	
6	U12001	IC,Acceleration Sensor	EAN62637201	BMC150 Accelerometer with Geomagnetic Sensor 2.2X2.2X1.0 LGA R/TP 14P Accelerometer with Geomagnetic Sensor BOSCH SENSORTEC GMBH	
6	C2311	Capacitor Ceramic,Chip	ECCH0007805	CL05A106MQ5NUNC 10uF 20% 6.3V X5R - 55TO+85C 1005 R/TP 0.5+-0.05 - SAMSUNG ELECTRO-MECHANICS CO., LTD.	
6	U8001	IC,DC,DC Converter	EAN62766201	RT8542 2.7 to 5.5V adj 0W CSP R/TP 20P - RICHTEK TECHNOLOGY CORP.	
6	C8014 C8015	Capacitor Ceramic,Chip	EAE62843001	CL10A106MO8NQNC 10uF -20TO20% 16V X5R - 55TO+85C 1608 R/TP 0.8+-0.15 - SAMSUNG ELECTRO-MECHANICS CO., LTD.	
6	R9011	Inductor Multilayer,Chip	EAP61866601	LG HK0603 R10J-T 100NH 5% - 60mA - - 3.74OHM 900MHZ 4 SHIELD 0 0.6X0.3X0.3MM R/TP TAIYO YUDEN CO.,LTD	
6	L9003	Inductor Multilayer,Chip	ELCH0010302	0603LS-101XJEC 100NH 5% - 1.4A 0.13OHM 1.15GHZ 12 NON SHIELD NONE 1.80X1.12X1.12MM R/TP COILCRAFT SINGAPORE PTE LTD.	
6	L8001	Inductor,Wire Wound,Chip	EAP62526501	TFM201610GHM-1R0MTAA 1UH 20% - 3A 3.6 3 0.06OHM - - SHIELD 2.0X1.6X1.0 MM - R/TP TDK KOREA COOPERATION	
6	C17	Capacitor Ceramic,Chip	ECCH0002001	C1005JB0J104KT000F 0.1uF 10% 6.3V X5R - 30TO+85C 1005 R/TP - - TDK CORPORATION	
6	C29	Capacitor Ceramic,Chip	ECCH0000161	MCH153CN333KK 33nF 10% 16V X7R - 55TO+125C 1005 R/TP - - ROHM Semiconductor KOREA CORPORATION	
6	CN80000	Connector,BtoB	EAG63232601	BM10NB(0.8)-24DS-0.4V(43) 24P 0.40MM STRAIGHT SOCKET SMD R/TP 800mM - HIROSE KOREA CO.,LTD	
6	R10007	Resistor,Chip	ERHY0009505	MCR006YZPJ103 10KOHM 5% 1/20W 0603 R/TP - ROHM.	

Copyright © 2014 LG Electronics. Inc. All right reserved.
Only for training and service purposes

Level	Location No.	Description	PartNumber	Spec	Remark
6	ZD6604	Diode,TVS	EDTY0012501	UCLAMP3311T.TCT 3.3V 3.5V min. 6.5V 5A - SLP1006P2T R/TP 2P 1 SEMTECH CORPORATION	
6	C2362	Capacitor Ceramic,Chip	EAE62726601	CL03A225MQ3CRNC 2.2uF -20TO20% 6.3V X5R - 55TO+85C 0603 R/TP 0.3T - SAMSUNG ELECTRO-MECHANICS CO., LTD.	
6	ZD7000	Varistor	SEVY0005402	ICVS0505500FR 5.6V 0% 50F 1.0*0.5*0.55 - SMD R/TP INNOCHIPS TECHNOLOGY	
6	CN70001	Connector Terminal Block	EAG63530401	KQ03L3-4R 4P 2.50MM STRAIGHT DIP T/REEL - HIROSE KOREA CO.,LTD	
6	J10000	Card Socket	EAG63211701	5000-12P-2.95D-A1-R0 SIM 12P STRAIGHT SMD T/REEL - HYUPJIN I&C CO.,LTD.	
6	SW2	Connector,RF	ENWY0005501	20279-001E-01 NONE STRAIGHT SOCKET SMD R/TP AU 50OHM 400mDB I-PEX CO., LTD	
6	CN10000	Socket,Card	EAG62830201	104031-0811 SD 8P ANGLE SMD R/TP 11.95x11.40x1.42t, Push-pull type MOLEX	
5	EBR071700	PCB Assembly Main,SMT Top	EBR78766401	LGD325.ACISWH 1.0 Main	
6	C2052	Capacitor Ceramic,Chip	ECCH0009504	MCH032A180JK 18pF 5% 25V NP0 -55TO+125C 0603 R/TP - ROHM.	
6	EAX010000	PCB,Main	EAX65604301	LGD325.ACISWH 1.1 FR-4 - 10 0.8 Main	
6	C1008 L2005	Inductor Multilayer,Chip	EAP62226601	LQP03TG15NJ02D 15NH 5% - 170mA - - 1.9OHM 3.1GHZ 11 SHIELD - 0.6X0.3X0.3MM R/TP MURATA MANUFACTURING CO.,LTD.	
6	C13 C14 C30	Capacitor Ceramic,Chip	ECCH0009103	C0603C0G1H101JT00NN 100pF 5% 50V C0G - 55TO+125C 0603 R/TP - - TDK CORPORATION	
6	C12000 C12001 C12005	Capacitor Ceramic,Chip	EAE62962301	GRM155R61A225KE95 2.2uF -10TO+10% 10V X5R -55TO+85C 1005 R/TP 0.5 L:1.0+-0.05 W:0.5+-0.05 T:0.5+-0.05 MURATA MANUFACTURING CO.,LTD.	
6	R2111	Resistor,Chip	ERHY0009554	MCR006YZPF2002 20KOHM 1% 1/20W 0603 R/TP - ROHM.	
6	C1001	Inductor Multilayer,Chip	ELCH0003826	LQG15HS3N3S02D 3.3NH 0.3NH - 300mA - - 0.17OHM 6GHZ 8 SHIELD NONE 1.0X0.5X0.5MM R/TP MURATA MANUFACTURING CO.,LTD.	

Copyright © 2014 LG Electronics. Inc. All right reserved.
Only for training and service purposes

Level	Location No.	Description	PartNumber	Spec	Remark
6	L2003	Capacitor(High Frequency),Ceramic,Chip	EAE62946101	GRM0335C1E2R0C_H 2pF 0.25PF 25V C0G -55TO+125C 0603 R/TP 0.3+-0.03 L:0.6+-0.03 W:0.3+-0.03 T:0.3+-0.03 MURATA MANUFACTURING CO.,LTD.	
6	C2108 C2316 C2317 C2323 C2325 C2327 C2328 C2330 C2331 C2332 C2333 C2336 C2337 C2338 C2342 C2343 C2344 C2351 C2352 C2353 C2354 C2372 C2373	Capacitor Ceramic,Chip	ECCH0009101	C0603X5R0J104KT00NN 0.1uF 10% 6.3V X5R -55TO+85C 0603 R/TP - TDK CORPORATION	
6	C1112	Capacitor Ceramic,Chip	ECCH0009216	GRM0335C1E220J 22pF 5% 25V X7R -55TO+125C 0603 R/TP - MURATA MANUFACTURING CO.,LTD.	
6	U4100	IC,PMIC	EAN62737301	PM8110 to 5.5V adj 0W CSP R/TP 118P SMBC, PWM, 19.2MHz XO QUALCOMM INCORPORATED.	
6	C2315 C2348	Capacitor Ceramic,Chip	ECCH0034801	CL03A474MQ3NNNH 0.47uF -20TO20% 6.3V X5R -55TO+85C 0603 R/TP 0.3+-0.03 - SAMSUNG ELECTRO-MECHANICS CO., LTD.	
6	L1018 L1019	Inductor Multilayer,Chip	ELCH0004706	1005GC2T10NJLF 10NH 5% - 250mA 0.42OHM 2.5GHZ 8 SHIELD NONE 1.0X0.5X0.5MM R/TP PILKOR ELECTRONICS LTD.	

Copyright © 2014 LG Electronics. Inc. All right reserved.
Only for training and service purposes

Level	Location No.	Description	PartNumber	Spec	Remark
6	C10005 C10006 C2324 C2341 C2347 C4183 C4186 C7205	Capacitor Ceramic,Chip	ECCH0017301	CL03A105MQ3CSNH 0.000001F 20% 6.3V X5R - 45TO+85C 0603 R/TP - SAMSUNG ELECTRO-MECHANICS CO., LTD.	
6	SW12000 SW12001 SW12002	Switch,Tact	EBF61974601	LS12P2E-T 1C1P 12VDC 0.02A HORIZONTAL 160GF R/TP Side Tact Switch (offset) CITIZEN	
6	R10013 R7006 R8005 R8011 R9015 R9022 R9026	Resistor,Chip	ERHY0009501	MCR006YZPJ000 0OHM 5% 1/20W 0603 R/TP - ROHM.	
6	C4121 C4122	Capacitor Ceramic,Chip	EAE62542701	CL21A226MPCLRNC 22uF 20% 10V X5R - 55TO+85C 2012 R/TP 0.95T max. - SAMSUNG ELECTRO-MECHANICS CO., LTD.	
6	R3001 R3002	Resistor,Chip	ERHY0009503	MCR006YZPJ101 100OHM 5% 1/20W 0603 R/TP - ROHM.	
6	C1013 C1016 C2359 C5102 C6000	Capacitor Ceramic,Chip	EAE62506501	CL05A475MP5NRNC 4.7uF 20% 10V X5R - 55TO+85C 1005 R/TP - - SAMSUNG ELECTRO-MECHANICS CO., LTD.	
6	R4001 R4002	Resistor,Chip	ERHY0009504	MCR006YZPJ102 1KOHM 5% 1/20W 0603 R/TP - ROHM.	
6	L4112	Inductor,Wire Wound,Chip	EAP62665901	VLS201610HBX-R47M 470NH 20% - 3.3A 3.4 3.3 0.043OHM - - SHIELD 2.0X1.6X1.0MM - R/TP TDK KOREA COOPERATION	
6	L8001	Inductor,Wire Wound,Chip	EAP62526501	TFM201610GHM-1R0MTAA 1UH 20% - 3A 3.6 3 0.06OHM - - SHIELD 2.0X1.6X1.0 MM - R/TP TDK KOREA COOPERATION	
6	U6000	IC,MCP,eMMC	EAN62825901	H9TP32A8JDBCPR-KGM NAND/4G SDRAM/4G(2G*2/ 32bit) 2.7VTO3.6V,1.7VTO1.95V,1.14VTO1.3V 11.5x13.0x1.0 TR 162P NAND+DDR SDRAM FBGA 4GB eMMC v4.5+8Gb LPDDR2 MCP (20nm 32Gb MLC+29nm 4Gb 533MHz LPDDR2) HYNIX SEMICONDUCTOR INC.	

Copyright © 2014 LG Electronics. Inc. All right reserved.
Only for training and service purposes

Level	Location No.	Description	PartNumber	Spec	Remark
6	C1017	Capacitor Ceramic,Chip	ECCH0000155	MCH153CN103KK 10nF 10% 16V X7R - 55TO+125C 1005 R/TP - ROHM Semiconductor KOREA CORPORATION	
6	C1048 C2045	Inductor Multilayer,Chip	EAP62226301	LQP03TG5N6J02D 5.6NH 5% - 250mA - - 0.88OHM 6GHZ 12 SHIELD - 0.6X0.3X0.3MM R/TP MURATA MANUFACTURING CO.,LTD.	
6	U8700	IC,Hall Effect Switch	EAN62357301	S-5712ACDL1 Hall IC 1.6X1.2 HVSOF R/TP 4P - SEIKO INSTRUMENTS INC.	
6	C2362	Capacitor Ceramic,Chip	EAE62726601	CL03A225MQ3CRNC 2.2uF -20TO20% 6.3V X5R - 55TO+85C 0603 R/TP 0.3T - SAMSUNG ELECTRO-MECHANICS CO., LTD.	
6	U12002	IC,Proximity	EAN62646301	APDS-9130-200 High T Proximity Sensor 3.36X4.94X3.45 COB R/TP 8P - AVAGO TECHNOLOGIES INTERNATIONAL SALES PTE. LIMITED	
6	C1046	Inductor Multilayer,Chip	ELCH0004710	1005GC2T15NJLF 15NH 5% - 250mA 0.53OHM 2GHZ 8 SHIELD NONE 1.0X0.5X0.5MM R/TP PILKOR ELECTRONICS LTD.	
6	C2318 C2319 C2320 C2349 C2350	Capacitor Ceramic,Chip	ECCH0009106	C0603X7R1C103KT 10nF 10% 10V X7R - 55TO+125C 0603 R/TP - TDK CORPORATION	
6	C2053	Inductor Multilayer,Chip	EAP61987001	HK0603 18NH-T 18NH 3% - 140mA - - 1.05OHM 2.3GHZ 21 SHIELD 0 0.6X0.3X0.3MM R/TP TAIYO YUDEN CO.,LTD	
6	R10007	Resistor,Chip	ERHY0009505	MCR006YZPJ103 10KOHM 5% 1/20W 0603 R/TP - ROHM.	
6	C15,C16	Capacitor Ceramic,Chip	ECZH0025916	GRM0335C1E330J 33pF 5% 25V NP0 - 55TO+125C 0603 R/TP - MURATA MANUFACTURING CO.,LTD.	
6	X4100	Crystal	EAW62063901	1RAA19200AAQ 19.2MHZ 10PPM 7pF 2520 SMD R/TP DAISHINKU CORPORATION.	
6	VA9601 VA9602 VA9603 VA9604 VA9605	Varistor	SEVY0005101	ICVL0518050FR 18V 0% 5F 1.0*0.5*0.55 NONE SMD R/TP INNOCHIPS TECHNOLOGY	

Copyright © 2014 LG Electronics. Inc. All right reserved.
Only for training and service purposes

Level	Location No.	Description	PartNumber	Spec	Remark
6	C4210 C4211 C4214	Resistor,Chip	ERHZ0000406	MCR01MZP5J104 100KOHM 5% 1/16W 1005 R/TP - ROHM.	
6	C2046	Inductor Multilayer,Chip	EAP62108401	LQP03TG12NJ02D 12NH 5% - 180mA - - 1.78OHM 3.7GHZ 11 SHIELD - 0.6X0.3X0.3MM R/TP MURATA MANUFACTURING CO.,LTD.	
6	PT2000	Thermistor,NTC	SETY0007301	NCP15WF104F03RC NTC,100000 ohm,SMD,4250K+/-1%,100K,1%,0.1mA,4250K+/-1%,SMD,R/TP MURATA MANUFACTURING CO.,LTD.	
6	L4113 L4114	Inductor,Wire Wound,Chip	ELCP0014201	1239AS-H-2R2N=P2 2.2UH 30% - 1.6A 2.2 1.6 0.108OHM - - SHIELD 2.5X2.0X1.2MM NONE R/TP TOKO, INC.	
6	C4116	Capacitor Ceramic,Chip	EAE62522101	CL10A226MP8NUNE 22uF 20% 10V X5R - 55TO+85C 1608 R/TP 1.05T max. - SAMSUNG ELECTRO-MECHANICS CO., LTD.	
6	C9	Capacitor Ceramic,Chip	ECZH0000813	C1005C0G1H101JT 100pF 5% 50V C0G - 55TO+125C 1005 R/TP - TDK KOREA COOPERATION	
6	U1000	Module,Tx Module	EAT62073401	SKY77573-31 0DBM 0DB 0% 0A 0A 0DB 0DBM 0DBM 42P 6.0x6.0x0.9MM WEDGE TxM for WTR2605, SP10T SKYWORKS SOLUTIONS INC.	
6	R12000 R12001 R12002	Resistor,Chip	ERHY0003301	MCR01MZP5J101 100OHM 5% 1/16W 1005 R/TP - ROHM.	
6	C1003	Inductor Multilayer,Chip	EAP62108201	LQP03TG3N3C02D 3.3NH 0.2NH - 400mA - - 0.32OHM 6GHZ 13 SHIELD - 0.6X0.3X0.3MM R/TP MURATA MANUFACTURING CO.,LTD.	
6	R7012	Resistor,Chip	ERHY0009526	MCR006YZPJ472 4.7KOHM 5% 1/20W 0603 R/TP - ROHM.	
6	R2208 R2209	Resistor,Chip	ERHY0009516	MCR006YZPJ222 2.2KOHM 5% 1/20W 0603 R/TP - ROHM.	
6	C2033 C2034 C4118 C5113 C5116	Capacitor Ceramic,Chip	EAE62502901	CL05A106MP5NUNC 10uF 20% 10V X5R - 55TO+85C 1005 R/TP 0.55T max. SAMSUNG ELECTRO-MECHANICS CO., LTD.	

Copyright © 2014 LG Electronics. Inc. All right reserved.
Only for training and service purposes

Level	Location No.	Description	PartNumber	Spec	Remark
6	VA12007 VA8002 VA8003 ZD8004	Varistor	SEVY0003601	ICVL0505101V150FR 5.6V 0% 100pF 1.0*0.5*0.55 NONE SMD R/TP INNOCHIPS TECHNOLOGY	
6	C8008 C8011	Capacitor Ceramic,Chip	ECCH0017601	CL05A475MQ5NRNC 4.7uF 20% 6.3V X5R - 55TO+85C 1005 R/TP 0.5MM - SAMSUNG ELECTRO-MECHANICS CO., LTD.	
6	R12006	Resistor,Chip	ERHY0009536	MCR006YZPF1003 100KOHM 1% 1/20W 0603 R/TP - ROHM.	
6	L1001	Capacitor(High Frequency),Ceramic,Chip	EAE62945301	GRM1555C1HR50B_H 0.5pF 0.1PF 50V C0G - 55TO+125C 1005 R/TP 0.5+/-0.05 L:1.0+-0.05 W:0.5+-0.05 T:0.5+-0.05 MURATA MANUFACTURING CO.,LTD.	
6	L1024	Inductor Multilayer,Chip	ELCH0004704	1005GC2T4N7SLF 4.7NH 0.3NH - 300mA 0.23OHM 3.5GHZ 8 SHIELD NONE 1.0X0.5X0.5MM R/TP PILKOR ELECTRONICS LTD.	
6	U7200	IC,Capacitive Touch Sensor	EAN62996101	S2202 Touch IC 5X5X0.4 LGA R/TP 44P - SYNAPTICS CO.	
6	C5104	Capacitor Ceramic,Chip	ECCH0009105	C0603C0G1H820JT00NN 82pF 5% 50V NP0 - 55TO+125C 0603 R/TP - - TDK CORPORATION	
6	L1004	Inductor Multilayer,Chip	EAP62108601	LQP03TG22NJ02D 22NH 5% - 140mA - - 2.85OHM 2.5GHZ 9 SHIELD - 0.6X0.3X0.3MM R/TP MURATA MANUFACTURING CO.,LTD.	
6	C5124 L1108 L2006	Capacitor Ceramic,Chip	ECCH0009208	GRM0335C1ER50C 0.5pF 0.25PF 25V X7R - 55TO+125C 0603 R/TP - MURATA MANUFACTURING CO.,LTD.	
6	ZD7200 ZD7201 ZD7202 ZD7203	Diode,TVS	EDTY0010101	ESD9B5.0ST5G 5V 5.8V min. 12.5V 1A - SOD-923 R/TP 2P 1 SCG HONG KONG SAR LTD.	
6	R8012	Resistor,Chip	ERHY0009507	MCR006YZPJ105 1MOHM 5% 1/20W 0603 R/TP - ROHM.	
6	ZD6605	Varistor	SEVY0005201	EVLC5S02050 5.5V 0% 50F 1.0*0.5*0.6 - SMD R/TP AMOTECH CO., LTD.	
6	L5100	Inductor Multilayer,Chip	EAP61767601	HK0603 68NJ-T 68NH 5% - 80mA - - 2.66OHM 1.1GHZ 4 SHIELD NONE 0.6X0.3X0.3MM R/TP TAIYO YUDEN CO.,LTD	

Copyright © 2014 LG Electronics. Inc. All right reserved.
Only for training and service purposes

Level	Location No.	Description	PartNumber	Spec	Remark
6	C4111 C4112	Capacitor Ceramic,Chip	ECCH0042302	CL21A475KACLRNC 4.7uF -10TO+10% 25V X5R -55TO+85C 2012 R/TP 0.85+-0.1 - SAMSUNG ELECTRO-MECHANICS CO., LTD.	
6	R2107	Resistor,Chip	EBC62581801	RC0603F392CS 3.9KOHM 1% 1/20W 0603 R/TP - SAMSUNG ELECTRO-MECHANICS CO., LTD.	
6	C1004 L5105	Inductor Multilayer,Chip	EAP62226101	LQP03TG3N9C02D 3.9NH 0.2NH - 350mA - - 0.35OHM 6GHZ 13 SHIELD - 0.6X0.3X0.3MM R/TP MURATA MANUFACTURING CO.,LTD.	
6	FL5100	Filter,Ceramic	EAM62250401	LFB212G45CG7D227 BPF 2.45KHZ 100Hz SMD R/TP 3P MURATA MANUFACTURING CO.,LTD.	
6	U4300	IC,Over Voltage Protection	EUSY0407301	RT9718L WDFN8,8,R/TP,Programmable OVP,IC,ChargerIC,Charger - - WDFN R/TP 8P - RICHTEK TECHNOLOGY CORP.	
6	L5106	Inductor Multilayer,Chip	EAP61747501	LQP03TN3N6B02D 3.6NH 0.1NH - 400mA - - 0.3OHM 6GHZ 14 SHIELD NONE 0.6X0.3X0.3MM R/TP MURATA MANUFACTURING CO.,LTD.	
6	C5100 C5101	Capacitor Ceramic,Chip	ECZH0001217	GRM155R60J474K 470nF 10% 6.3V X5R -25TO+70C 1005 BK-DUP - MURATA MANUFACTURING CO.,LTD.	
6	C1047 R4003 R4901 R9010	Resistor,Chip	ERHZ0000401	MCR01MZSJ000 0OHM 5% 1/16W 1005 R/TP - ROHM.	
6	U2002	IC,Power Amplifier	EAN62885901	SKY77742-21 3.2V to 4.35V 0 0 0W 0W 0 2 SMD R/TP 16P 3*4size, for WTR2605, single input dual output, Band1/2/5/8, with CPL, GPIO SKYWORKS SOLUTIONS INC.	
6	C2367 C2368 C2369 C9021	Capacitor Ceramic,Chip	EAE62282201	GRM033R71E102KA01D 0.000000001F 10% 25V X7R -55TO+125C 0603 R/TP 0.3+/-0.03 MM - MURATA MANUFACTURING CO.,LTD.	
6	FB1	Filter,Bead	SFBH0008102	BLM15HD182SN1D 1800 ohm 1.0X0.5X0.5 25% 2.2 ohm 0.2A SMD R/TP 2P 0 MURATA MANUFACTURING CO.,LTD.	
6	U5100	IC,WiFi	EAN62698901	WCN-3620-0-61WLNSP WiFi(11bgn)+BT4.0+FM IC for QMC 28nm BB, 3.32*3.55*0.63, 0.4pitch WLCSP R/TP 61P QUALCOMM INCORPORATED.	

Copyright © 2014 LG Electronics. Inc. All right reserved.
Only for training and service purposes

Level	Location No.	Description	PartNumber	Spec	Remark
6	C4113	Capacitor Ceramic,Chip	ECZH0001210	C1005Y5V1A474ZT000F 470nF -20TO+80% 10V Y5V -30TO+85C 1005 R/TP - TDK KOREA COOPERATION	
6	C2031 C2036 C9034 C9035	Capacitor Ceramic,Chip	ECZH0025920	GRM033R71C102K 1nF 10% 16V X7R - 55TO+125C 0603 R/TP - - MURATA MANUFACTURING CO.,LTD.	
6	C5120 C5126 L1109	Capacitor(High Frequency),Ceramic,Chip	EAE62945801	GRM0335C1E1R0C_H 1pF 0.25PF 25V C0G - 55TO+125C 0603 R/TP 0.3+-0.03 L:0.6+-0.03 W:0.3+-0.03 T:0.3+-0.03 MURATA MANUFACTURING CO.,LTD.	
6	FL1001	Filter,Saw	EAM62732801	B8808 881.5MHz 1.1x0.9x0.45t SMD R/TP 5P EPCOS PTE LTD.	
6	R2003	Resistor,Chip	EBC62316201	RC0603F224CS 220KOHM 1% 1/20W 0603 R/TP - SAMSUNG ELECTRO-MECHANICS CO., LTD.	
6	L2004	Inductor Multilayer,Chip	EAP62226401	LQP03TG6N8J02D 6.8NH 5% - 200mA - - 1.15OHM 5.4GHZ 12 SHIELD - 0.6X0.3X0.3MM R/TP MURATA MANUFACTURING CO.,LTD.	
6	U2100	IC,Digital Baseband Processor,3G	EAN62797001	MSM8210 Dual 1.2GHz A7, 1x300 LPDDR2, HSPA(7.2/5.8),CDMA, TD-SCDMA,DOrA,DSDS, qHD display@ 60fps, Adreno 302, 12x12mm NSP R/TP 488P QUALCOMM INCORPORATED.	
6	L4111	Inductor,Wire Wound,Chip	EAP62266501	MAMK2520T1R0M 1UH 20% - 2.7A 3.1 2.7 0.059OHM - - SHIELD 2.5X2.0X1.2MM - R/TP TAIYO YUDEN CO.,LTD	
6	R4100	Resistor,Chip	ERHY0009547	MCR006YZPF2003 200KOHM 1% 1/20W 0603 R/TP - ROHM.	
6	L1002	Inductor Multilayer,Chip	EAP62225901	LQP03TG1N0C02D 1NH 0.2NH - 600mA - - 0.15OHM 6GHZ 12 SHIELD - 0.6X0.3X0.3MM R/TP MURATA MANUFACTURING CO.,LTD.	
6	R1600	Resistor,Chip	ERHY0009311	MCR006YZPF51R0 51OHM 1% 1/20W 0603 R/TP - ROHM.	
6	C2363	Capacitor Ceramic,Chip	EAE62927201	ADK107BBJ476MA 47uF -20TO20% 4V X5R - 55TO+85C 1608 R/TP 0.8T +0.2 L:1.6+0.2 W:0.8+0.2 T:0.8+0.2 KOREA TAIYO YUDEN.CO., LTD.	

Copyright © 2014 LG Electronics. Inc. All right reserved.
Only for training and service purposes

Level	Location No.	Description	PartNumber	Spec	Remark
6	FL2001	Filter,Duplexer	EAM62692801	B8597 2140.0MHz 2112.4to2167.6MHz 1950.0MHz 1922.4to1977.6MHz 2.1typ/2.6max 1.6typ/2.0max 2.0x1.6x0.47t DUAL SMD R/TP 9P EPCOS PTE LTD.	
6	FB5100	Filter,Bead	EAM62471001	BLM03AX241SN1D 240 ohm 0.6X0.3X0.33 25% 0.38 ohm 0.35A SMD R/TP 2P 0 MURATA MANUFACTURING CO.,LTD.	
6	C2039	Inductor Multilayer,Chip	EAP61767701	LQP03TN3N0B02D 3NH 0.1NH - 450mA - - 0.25OHM 6GHZ 14 SHIELD NONE 0.6X0.3X0.3MM R/TP MURATA MANUFACTURING CO.,LTD.	
6	C2041	Capacitor(High Frequency),Ceramic,Chip	EAE62946201	GRM0335C1E2R2C_H 2.2pF 0.25PF 25V C0G - 55TO+125C 0603 R/TP 0.3+-0.03 L:0.6+-0.03 W:0.3+-0.03 T:0.3+-0.03 MURATA MANUFACTURING CO.,LTD.	
6	C4128	Capacitor Ceramic,Chip	ECCH0017501	CL10A226MQ8NRNE 22uF 20% 6.3V X5R - 55TO+85C 1608 R/TP 0.8MM - SAMSUNG ELECTRO-MECHANICS CO., LTD.	
6	C4117	Capacitor Ceramic,Chip	ECCH0000182	GRM155R61A104K 0.1uF 10% 10V X5R - 55TO+85C 1005 R/TP - MURATA MANUFACTURING CO.,LTD.	
6	C5117	Capacitor Ceramic,Chip	ECCH0009506	MCH032A270JK 27pF 5% 25V NP0 -55TO+125C 0603 R/TP - ROHM.	
6	R12007	Resistor,Chip	ERHZ0000441	MCR01MZP5J220 22OHM 5% 1/16W 1005 R/TP - ROHM.	
6	C5105	Capacitor Ceramic,Chip	ECCH0009110	C0603X7R0J223KT 22nF 10% 6.3V X7R - 55TO+125C 0603 R/TP - - TDK CORPORATION	
6	R2106 R2108	Resistor,Chip	ERHZ0000270	MCR01MZP5F33R0 33OHM 1% 1/16W 1005 R/TP - ROHM.	
6	FL1006	IC,RF Amplifier	EAN62826801	SFMG2BAD001 2.85 0 0 0W 0W 0 0 MOLD R/TP 8P - WISOL.CO.,LTD	
6	C1011 C2055	Inductor Multilayer,Chip	EAP62108001	LQP03TG2N2C02D 2.2NH 0.2NH - 450mA - - 0.25OHM 6GHZ 13 SHIELD - 0.6X0.3X0.3MM R/TP MURATA MANUFACTURING CO.,LTD.	
6	U3000	IC Assembly	EAN62686601	WTR2605 2G/3G, WCDMA, GSM, EDGE, CDMA and TDSCDMA Multi Mode QUALCOMM INCORPORATED.	

Copyright © 2014 LG Electronics. Inc. All right reserved.
Only for training and service purposes

Level	Location No.	Description	PartNumber	Spec	Remark
6	L1000	Inductor Multilayer,Chip	ELCH0004715	1005GC2T27NJLF 27NH 5% - 200mA - - 0.9OHM 1.4GHZ 8 SHIELD NONE 1.0X0.5X0.5MM R/TP PILKOR ELECTRONICS LTD.	
6	L5103	Inductor Multilayer,Chip	EAP62107901	LQP03TG1N5C02D 1.5NH 0.2NH - 600mA - - 0.15OHM 6GHZ 13 SHIELD - 0.6X0.3X0.3MM R/TP MURATA MANUFACTURING CO.,LTD.	
6	FL1000	Filter,Saw,Dual	EAM62792801	SFRG42DB002 1842.50MHz/1960.00MHz 1.5x1.1x0.60t SMD R/TP 10P WISOL.CO.,LTD	
6	L5101	Inductor Multilayer,Chip	EAP61866701	LG HK0603 82NJ-T 82NH 5% - 70mA - - 3.37OHM 1GHZ 4 SHIELD 0 0.6X0.3X0.3MM R/TP TAIYO YUDEN CO.,LTD	
6	C1000 L1033	Inductor Multilayer,Chip	ELCH0003831	LQG15HS1N0S02D 1NH 0.3NH - 300mA - - 0.07OHM 10GHZ 8 SHIELD NONE 1.0X0.5X0.5MM R/TP MURATA MANUFACTURING CO.,LTD.	
6	FL2002	Filter,Duplexer	EAM62890201	B8605 942.5MHz 925.0to960.0MHz 897.5MHz 880.0to915.0MHz 1.9/4.0dB 2.4/4/0dB 2.0x1.6x0.47t DUAL SMD R/TP 9P EPCOS PTE LTD.	
6	R2101	Resistor,Chip	ERHZ0000250	MCR01MZP5F2400 240OHM 1% 1/16W 1005 R/TP - ROHM.	
6	L1003	Capacitor(High Frequency),Ceramic,Chip	EAE62963701	GRM0335C1H100J_H 10pF -5 to +5% 50V C0G -55TO+125C 0603 R/TP 0.3+-0.03 L:0.6+-0.03 W:0.3+-0.03 T:0.3+-0.03 MURATA MANUFACTURING CO.,LTD.	
6	FL1105	Filter,Saw	EAM62633001	SFHG89DQ102 1575.42@GPS/1601.72@GLONASS 1.4x1.1x0.5t SMD R/TP 5P WISOL.CO.,LTD	
6	C2038	Capacitor(High Frequency),Ceramic,Chip	EAE62946601	GRM0335C1E4R7C_H 4.7pF 0.25PF 25V C0G -55TO+125C 0603 R/TP 0.3+-0.03 L:0.6+-0.03 W:0.3+-0.03 T:0.3+-0.03 MURATA MANUFACTURING CO.,LTD.	
6	C7049 C8004 C8007	Capacitor Ceramic,Chip	EAE62286801	CL03A104KP3NNNC 0.0000001F 10% 10V X5R -55TO+85C 0603 R/TP 0.3 - SAMSUNG ELECTRO-MECHANICS CO., LTD.	
6	MIC1	Microphone Condenser	EAB62911301	S17OT423-001 -42DB 150OHM OMNI 1.5 TO 3.6V 3.10 * 2.5 * 1.1T SMD GoerTek Inc.	

Copyright © 2014 LG Electronics. Inc. All right reserved.
Only for training and service purposes

Level	Location No.	Description	PartNumber	Spec	Remark
6	R3000	Resistor,Chip	ERHY0009531	MCR006YZPJ620 62OHM 5% 1/20W 0603 R/TP - ROHM.	
6	R2100	Resistor,Chip	ERHZ0000235	MCR01MZP5F2000 200OHM 1% 1/16W 1005 R/TP - ROHM.	
6	L3001	Inductor Multilayer,Chip	ELCH0012502	LQW15AN10NG00D 10NH 2% - 500mA 0.17OHM 5.5GHZ 25 NON SHIELD NONE 1.0X0.5X0.5MM R/TP MURATA MANUFACTURING CO.,LTD.	
6	C2028	Inductor Multilayer,Chip	EAP62266401	LQP03TN2N7B02D 2.7NH 0.1NH - 500mA - - 0.2OHM 6GHZ 14 SHIELD - 0.6X0.3X0.3MM R/TP MURATA MANUFACTURING CO.,LTD.	
5	SAD010000	Software,Mobile	SAD34403001	Android KK Base D32510a - WORLD WIDE QCT -	
4	EBR071500	PCB Assembly Main,Insert	EBR78792101	LGD325.ACISWH 1.1 Main	
5	EBP00	Camera Module	EBP61721801	CW5025-AF4C1 CW5025-AF4C1 5M AF Hynix Hi-543 1/4" 0deg, FPC 7mm, 8.5*8.5*4.95t COWELL ELECTRONICS CO.,LTD	
5	EBP01	Camera Module	EBP61941701	CW0373-ADDAC CW0373-ADDAC VGA Hynix 1/10 CNT Top COWELL ELECTRONICS CO.,LTD	
5	RAA050100	Resin,PC	BRAH0001301	UF2040 or 3075BHF . . NONE	
2	EAD010000	Cable,Assembly	EAD62377902	LG0108 USB USB 1.0M 4 BLACK UL N ningbo broad telecommunication co.,ltd	
1	SAF010100	Software Assembly Common	SAF30180001	LGD325.ACISWH KK -	
2	SAD010600	Software,OSP	SAD34367201	Windows Android KK - -	
2	SAD010500	Software,USB Driver	SAD34367301	Windows -	
2	SAD010100	Software Application	SAD34402901	Android KK - PCSuiteV - - WORLD WIDE QCT -	

Copyright © 2014 LG Electronics. Inc. All right reserved.
Only for training and service purposes

12.3 Accessory

Note: This Chapterisused for reference,Part order is ordered by SBOM standard onGCSC

Level	Location No.	Description	PartNumber	Spec	Remark
2	EAY060000	Adapters	SSAD0038307	STA-U17ER_EAC 90-264Vac 5.1V 700mA 50/60Hz CB,CE NONE DC PIN PLUG - SUNLIN ELECTRONICS CO.,LTD	
2	MFL053800	Manual,Operation	MFL68221201	PRINTING LGD325.ACISWH ZZ:Without Color Russian Federation ENGLISH+RUSSIAN+KAZAKH+UKRAINIAN -	
2	EAC00	Rechargeable Battery Lithium Ion	EAC62258201	BL-52UH_WW_LGC 3.8V 2.04AH 500mAH 47*59*5.2 47*62*5.5 BLACK Innerpack BL-52UH_WW_LGC_2040mAh_Innerpack LG Chem,LTD.	
2	AFN053800	Manual Assembly Operation	AFN76332401	LGD325.ACISWH ZZ:Without Color -	
3	MBM068900	Card,Service Guide	MBM64256801	PRINTING LGD325.ACISWH ZZ:Without Color -	
3	MBM087200	Card,Warranty	MCDF0011303	COMPLEX GD350 CISBK ZZ:Without Color -	

Copyright © 2014 LG Electronics. Inc. All right reserved.
Only for training and service purposes