Internal Use Only

LG

Service Manual

LG-D373EU

Date: May, 2014 / Issue 0.9

Table Of Contents

1. INTRODUCTION

1.1 Purpose

This manual provides the information necessary to repair, calibration, description and download the features of this model.

1.2 Regulatory Information

A. Security

Toll fraud, the unauthorized use of telecommunications system by an unauthorized part (for example, persons other than your company's employees, agents, subcontractors, or person working on your company's behalf) can result in substantial additional charges for your telecommunications services. System users are responsible for the security of own system. There are may be risks of toll fraud associated with your telecommunications system. System users are responsible for programming and configuring the equipment to prevent unauthorized use. The manufacturer does not warrant that this product is immune from the above case but will prevent unauthorized use of common carrier telecommunication service of facilities accessed through or connected to it. The manufacturer will not be responsible for any charges that result from such unauthorized use.

B. Incidence of Harm

If a telephone company determines that the equipment provided to customer is faulty and possibly causing harm or interruption in service to the telephone network, it should disconnect telephone service until repair can be done. A telephone company may temporarily disconnect service as long as repair is not done.

C. Changes in Service

A local telephone company may make changes in its communications facilities or procedure. If these changes could reasonably be expected to affect the use of the phones or compatibility with the net work, the telephone company is required to give advanced written notice to the user, allowing the user to take appropriate steps to maintain telephone service.

D. Maintenance Limitation

Maintenance limitations on the phones must be performed only by the manufacturer or its authorized agent. The user may not make any changes and/or repairs expect as specifically noted in this manual. Therefore, note that unauthorized alternations or repair may affect the regulatory status of the system and may void any remaining warranty.

E. Notice of Radiated Emission

This model complies with rules regarding radiation and radio frequency emission as defined by local regulatory agencies. In accordance with these agencies, you may be required to provide information such as the following to the end user.

F. Pictures

The pictures in this manual are for illustrative purposes only; your actual hardware may look slightly different.

G. Interference and Attenuation

A phone may interfere with sensitive laboratory equipment, medical equipment, etc. Interference from unsuppressed engines or electric motors may cause problems.

H. Electrostatic Sensitive Devices

ATTENTION

Boards, which contain Electrostatic Sensitive Device (ESD), are indicated by the sign. Following information is ESD handling:

- Service personnel should ground themselves by using a wrist strap when exchange system boards.
- When repairs are made to a system board, they should spread the floor with anti-static mat which is also grounded.
- Use a suitable, grounded soldering iron.
- Keep sensitive parts in these protective packages until these are used.
- When returning system boards or parts like EEPROM to the factory, use the protective package as described.

1.3 Specification

KEY FEATURES

- Android 4.4-(KitKat)
- 5" Touch Screen WVGA (480 x 800)
- 8MP AF with flash
- 3G Mobile Hotspot

ENHANCED USER EXPERIENCE

- Android 4.4
- Proximity Sensor – locks the touch screen and buttons while talking on the phone
- Motion Sensor – Electronic compass , Accelerometer and Gyroscope
- USB Charging via Computer
- Airplane Mode (RF Off)

DESIGN

- Sleek and Stylish Design
- 5" WVGA LCD Screen
- Capacitive Touch Screen – Glass with fast and accurate response
- Micro USB/Charging Port

CAMERA/VIDEO

- 8MP AF with flash (Optional 5MP : D380/D370)
- Camera Resolutions: 3264 X 2448 3200 X 1920 2560 x 1920 1280 X 960 Pixels
- Image Editor: zoom, rotate, crop images
- Brightness, ISO, White Balance,* Color Effects, Timer
- Cheese shutter – take photo with voice command.
- Video Resolutions: 800 X 480 640 x 480 320 x 240 176 x 144 Pixels

MULTIMEDIA

- Music Player for MP3, WMA, and Unprotected AAC
- Stereo Sound via Headset or *Bluetooth*
- Music Library – Organized by Artists, Albums, Songs, and Playlists
- Repeat and Shuffle Music Playback Modes

BLUETOOTH®

- Version: 4.0
- Supported Profiles: headset, hands-free, object push, advanced audio distribution (stereo), audio/video remote control, file transfer, phone book access, message access, serial port
- Listen to Music with Optional Stereo *Bluetooth* Headset**
- Send User-Generated Pictures (JPEG) and Videos via *Bluetooth* Wireless Technology

*Depends on available memory.

**Accessories sold separately.

VOICE/AUDIO

- One-Touch Speakerphone*
- Speaker-Independent Voice Commands
- Voice-Activated Dialing
- Text to Speech
- MP3 Music Ringer Support

OOLS & DATA

- Android Apps: Alarm/Clock, Browser, Calculator, Calendar (Corporate or Google), Camera, Contacts, Email, Gallery, Gmail, Google+, Maps, Messaging, Messenger, Music Player, Phone, Places, Play Books, Play Movies, Play Music, Play Store, Talk, Video Player, Voice Recorder, Youtube
- Navigation – spoken turn-by-turn directions showing real-time traffic
- Wi-Fi Connectivity – IEEE 802.11 b/g/n
- A-GPS Support for Enhanced Location Accuracy

SPECIFICATIONS

- Technology: GSM/WCMDA
- Frequencies: GSM 850,900,1800,1900
- WCDMA 2100, 850
- Data Transmission: WCMDA, GPRS
- Dimensions: 138.24 x 74.28 x 9.7 (mm)
- Display: 5" , WVGA (480 x 800) pixels
- Standard Battery: 2,540 [mAh]

ACCESSORIES

- Standard Battery
- Travel Adapter and USB Cable*
- Stereo Headset

2. PERFORMANCE

2.1 Product Name

LG-D373EU : WCDMA 850/900//2100+GSM850/EGSM/DCS/PCS (HSUPA 5.76Mbps(cat6)/HSDPA 21Mbps(cat14)/GPRS Class12/EDGE Class12)

2.2 Supporting Standard

Supporting Standard	WCDMA(FDD1,5,8)/EGSM/GSM850/DCS1800/PCS1900 with seamless handover Phase 2+(include AMR) SIM Toolkit : Class 1, 2, 3, C-E	
Frequency Range	WCDMA(FDD1) TX : 1920 – 1980 MHz WCDMA(FDD1) RX : 2110 – 2170 MHz WCDMA(FDD5) TX : 824 – 849 MHz WCDMA(FDD5) RX : 869 – 894 MHz WCDMA(FDD8) TX : 882 ~ 912 MHz WCDMA(FDD8) RX : 927 ~ 957 MHz EGSM TX : 880 – 915 MHz EGSM RX : 925 – 960 MHz GSM850 TX : 824 – 849 MHz GSM850 RX : 869 – 894 MHz GSM900 TX : 880 – 915 MHz GSM900 RX : 925 – 960 MHz DCS1800 TX :1710 – 1785 MHz DCS1800 RX : 1805 – 1880 MHz PCS1900 TX : 1850 – 1910 MHz PCS1900 RX : 1930 – 1990 MHz	
Application Standard		

2.3 Main Parts : GSM Solution

Item	Part Name	Comment
Digital Baseband	MSM8210 : Qualcomm	
Analog Baseband	PM8110 : Qualcomm	
RF Chip	WTR2605 : Qualcomm	

2.4 HW Features

List	Type / Spec.	
1. Phone Type	DOP Type	
2. Size	138.24 x 74.28 x 9.7 (mm)	
3. Weight	141g	
4. Battery	2,540mAh (typ.), 2,460mAh(min) (Li-Ion)	
5.Chipset	MSM8210	
6. Memory	8GB(EMMC) +8Gb(LPDDR2)	
7. LCD	Size	5 inch
	Dot	480(H) X 800(V)
	Color	16.7M colors
	Display Type	Active matrix TFT
	NTSC	Typ. 70%
	Contrast Ratio	Typ. 1000:1
	Pixel Pitch(mm)	0.1362mm X 0.1362mm (186PPI)
8. Main Camera (8M)	Type	CMOS image sensor
	Resolution	3280(H) X 2464(V) pixels.
	Frame Rate	2.5fps @ Full Size (3280 x 2464)
	View Angle	71.4°
	Image Scaling Down	8M,5M,3M,W3M,1M,W1M
	Pixel x size	1.1um x1.1um

10. Audio	1) MIDI	MIDI
	2) Mono	18 X 10 X 3T Speaker
	3) Receiver	13 X 07 X 2.7T Wideband Receiver
11. Bluetooth	Effective Distance	10M
	Distance	0 m ~ 10 m (depend on environment)
12. WLAN	standard	IEEE 802.11 b/g/n
	Throughput	Max 40Mbps (SDIO Driver performance)
	depend on environment	0 ~ 50m (depend on environment)
13. GPS	type	A-GPS, GNSS

2.5 HW SPEC

1) WCDMA transmitter specification

Item	Spec.	Min	Typ.	Max	Unit
Maximum Output Power	Power class Ⅲ	21.0	23	25.0	dBm/3.84MHz
Frequency Accuracy	-	-200	-	+200	Hz
Minimum Output Power	-	-	-	-50	dBm/3.84MHz
Occupied Bandwidth	-	-	-	4.6	MHz
Adjacent Channel Leakage Power Ratio	Δf = ± 5MHz	-	-	-33	dBm/3.84MHz
	Δf = ± 10MHz	-	-	-43	dBm/3.84MHz
Error Vector Magnitude(EVM)	-	-	-	17	%
Peak Code Domain Error	-	-	-	15	dBm/3.84MHz
Open Loop Output Power	Ior =-106.7dBm/3.84MHz	-46.7	-	-28.7	dBm/3.84MHz
	Ior =-65.7dBm/3.84MHz	-23.0	-	-5.0	dBm/3.84MHz
	Ior =-25.0dBm/3.84MHz	-0.0	-	14.0	dBm/3.84MHz
Transmit Off Power	-	-	-	-56	dBm/3.84MHz
Spectrum Emission Mask	Δf = 2.5~3.5MHz	-35-15 * (Δf-2.5)			dBc/30KHz
	Δf = 3.5~7.5MHz	-35-1 * (Δf-3.5)			dBc/1MHz

	Δf = 7.5~8.5MHz	-39 10 * (Δf-7.5)			dBc/1MHz
	Δf = 8.5~12.5MHz	-49			dBc/1MHz
Transmit Spurious Emission	9kHz ~ 150kHz			-36	dBm
	150kHz ~ 30MHz			-36	dBm
	30MHz ~ 1GHz			-36	dBm
	1GHz ~ 12.5GHz			-30	dBm

2) WCDMA receiver specification

Item	Specification
Receive Frequency	BD1: 2110 ~ 2170 MHz BD5: 869 MHz ~ 894 MHz BD8: 927 ~ 957 MHz
Reference Sensitivity Level <REF$\hat{I}_{or}$>	Band1 : BER < 0.001 when Îor = -106.7 dBm / 3.84 MHz Band5 : BER < 0.001 when Îor = -106.7 dBm / 3.84 MHz Band8 : BER < 0.001 when Îor = -104.7 dBm / 3.84 MHz
Maximum Input Level	BER < 0.001 when Îor = -25 dBm / 3.84 MHz
Adjacent Channel Selectivity (ACS)	ACS > 33 dB where BER < 0.001 when Îor = <REF$\hat{I}_{or}$> + 14 dB / 3.84 MHz & Ioac = –52 dBm / 3.84 MHz @ ±5 MHz
Blocking Characteristic	BER < 0.001 when Îor = <REF$\hat{I}_{or}$> + 3 dB / 3.84 MHz & Iblocking = -56 dBm / 3.84 MHz @ Fuw(offset) = ±10 MHz or Iblocking = -44 dBm / 3.84 MHz @ Fuw(offset) = ±15 MHz
Spurious Response	BER < 0.001 when Îor = <REF$\hat{I}_{or}$> + 3 dB / 3.84 MHz & Iblocking = -44 dBm
Intermodulation	BER < 0.001 when Îor= <REF$\hat{I}_{or}$> + 3 dB / 3.84 MHz & Iouw1 = -46 dBm @ Fuw1(offset) = ±10 MHz & Iouw2 = -46 dBm / 3.84 MHz @ Fuw2(offset) = ±20 MHz
Spurious Emissions	< -57 dBm / 100 kHz BW @ 9 kHz ≤ f < 1 GHz < -47 dBm / 1 MHz BW @ 1 GHz ≤ f ≤ 12.75 GHz
Inner Loop Power Control In Uplink	Adjust output(TPC command) cmd 1dB 2dB 3dB +1 +0.5/1.5 +1/3 +1.5/4 0 -0.5/+0.5 -0.5/+0.5 -0.5/+0.5 -1 -0.5/-1.5 -1/-3 -1.5/-4 group(10equal command group) +1 +8/+12 +16/+24

3) HSDPA transmitter specification

	Item	Spec.		Min	Typ.	Max	Unit
Trands mitter	5.2.A Maximum Output Power with HS-DPCCH	1/15 ≤ βc/βd ≤ 12/15 13/15 ≤ βc/βd ≤ 15/8 15/7 ≤ βc/βd ≤ 15/0		21.0 20 19	23 22.5 22.5	25.0 25 25	dBm/3.84MHz
	5.7A HS-DPCCH	MAX / 0dBm	Step 0	0 dBm +/- 1 dB			dB
			Step 1 – Step 0	6 dB +/- 2.3 dB			dB
			Step 2 – Step 3	1 dB +/- 0.6 dB			dB
			Step 5 – Step 4	0 dB +/- 0.6 dB			dB
			Step 6 – Step 7	5 dB +/- 2.3 dB			dB
	5.9A Spectrum Emission Mask with HS-DPCCH	Δf = 2.5~3.5MHz		-35-15 * (Δf-2.5)			dBc/30KHz
		Δf = 3.5~7.5MHz		-35-1 * (Δf-3.5)			dBc/1MHz
		Δf = 7.5~8.5MHz		-39 10 * (Δf-7.5)			dBc/1MHz
		Δf = 8.5~12.5MHz		-49			dBc/1MHz
	5.10A Adjacent Channel Leakage Power Ratio with HS-DPCCH	Δf = ± 5MHz		-	-	-33	dBm/3.84MHz
		Δf = ± 10MHz		-	-	-43	dBm/3.84MHz
	5.13.1A Error Vector Magnitude (EVM) with HS-DPCCH	MAX Power -20 dBm		-	-	17.5	%
Receiver	6.3A Maximum Input Level for HS-PDSCH Reception	Pin = -25dBm		-	-	10	BLER(%)

4) GSM specification

Item	Spec.
Phase Error	Rms : 5° Peak : 20 °
Frequency Error	GSM : 0.1 ppm DCS/PCS : 0.1 ppm
EMC(Radiated Spurious Emission Disturbance)	GSM/DCS : < -28dBm
Transmitter Output power and Burst Timing	GSM : 5dBm – 33dBm ± 3dB DCS/PCS : 0dBm – 30dBm ± 3dB
Burst Timing	<3.69us
Spectrum due to modulation out to less than 1800kHz offset	200kHz : -36dBm 600kHz : -51dBm/-56dBm
Spectrum due to modulation out to larger than 1800kHz offset to the edge of the transmit band	GSM : 1800-3000kHz :< -63dBc(-46dBm) 3000kHz-6000kHz : <-65dBc(-46dBm) 6000kHz < : < -71dBc(-46dBm) DCS : 1800-3000kHz :< -65dBc(-51dBm) 6000kHz < : < -73dBc(-51dBm)
Spectrum due to switching transient	400kHz : -19dBm/-22dBm(5/0), -23dBm 600kHz : -21dBm/-24dBm(5/0), -26dBm
Reference Sensitivity – TCH/FS	Class II(RBER) : -105dBm(2.439%)
Usable receiver input level range	0.012(-15 - -40dBm)
Intermodulation rejection – Speech channels	± 800kHz, ± 1600kHz : -98dBm/-96dBm (2.439%)
AM Suppression - GSM : -31dBm - DCS : -29dBm	-98dBm/-96dBm (2.439%)
Timing Advance	± 0.5T

5) Bluetooth transmitter specification

Item	Spec.		Min	Typ.	Max	Unit
Output Power	DH5 PRBS9	Power (Class I)	0	-	+20	dBm
Power Density	DH5 PRBS9	@100kHz RBW		-	+20	dBm
Power Control	DH1 PRBS9	Step size	2	-	8	dB
		Power(min)		-	4	dBm
Frequency Range	DH5 PRBS9	-30dBc @100kHz RBW	2400	-	2483.5	MHz
Tx Output Spectrum (20dB BW)	DH5 PRBS9	$\Delta f = f_H - f_L$		-	1	MHz
Tx Output Spectrum (Adjacent Output Power)	DH5 PRBS9	@M-N = 2		-	-20	dBm
		@M-N ≥ 3		-	-40	dBm
Modulation Index	DH5 11110000	$f1_{AVG}$	140	-	175	kHz
	DH5 10101010	$f2_{MAX}$	115	-		kHz
		$f2_{AVG}/f1_{AVG}$	0.8	-		
Initial Carrier Freq. Tolerance	DH5 PRBS9		-75	-	+75	kHz
Carrier Frequency Drift	DH1 10101010	Freq. Drift	-25	-	+25	kHz
		Drift Rate	-20	-	+20	kHz/50us
	DH3 10101010	Freq. Drift	-40	-	+40	kHz
		Drift Rate	-20	-	+20	kHz/50us
	DH5 10101010	Freq. Drift	-40	-	+40	kHz
		Drift Rate	-20	-	+20	kHz/50us

6) Bluetooth receiver specification

Item	Spec. BER=0.1%		Min	Typ.	Max	Unit
Sensitivity (Single Slot Packet)	DH1 PRBS9 Input power @BT_w	-		-	-70	dBm
Sensitivity (Multi Slot Packet)	DH5 PRBS9 Input power @BT_w	-		-	-70	dBm
C/I Performance*	DH1 PRBS9 Input power @BT_i	C/I@Co-Channel -60dBm @ BT		-	11	dB
		C/I @1MHz -60dBm@ BT		-	0	
		C/I @2MHz -60dBm@ BT		-	-30	
		C/I @≥3MHz -67dBm@ BT		-	-40	
		C/I @Image -67dBm@ BT		-	-9	
		C/I @ Image±1MHz -67dBm@ BT		-	-20	
Blocking Performance	DH1 PRBS9 Input power @CW	30M ~2 GHz -67dBm@ BT	-10	-		dBm
		2 ~ 2.4 GHz -67dBm@ BT	-27	-		
		2.5 ~ 3 GHz -67dBm@ BT	-27	-		
		3 ~ 12.75 GHz -67dBm@ BT	-10	-		
Intermodulation Performance	DH1 PRBS9 Input power @CW_i	Δf = +5MHz (CW_i) Δf = +10MHz (BT_i) -64dBm@ BT_w	-39	-		dBm
		Δf = -5MHz (CW_i) Δf = -10MHz (BT_i) -64dBm@ BT_w	-39	-		dBm
Maximum Input Level	DH1 PRBS9 Input power @BT_w	-	-20	-		dBm

7) WLAN 802.11b transceiver specification

Item	Specification
Transmit Frequency	2400 MHz ~ 2483.5 MHz (CH1~CH13)
Tx Power Level	≤ 20dBm under (Europe), ≤ 30dBm under (USA)
Frequency Tolerance	within ±25 PPM
Chip clock Frequency Tolerance	within ±25 PPM
Spectrum Mask	≤ -30 @ fc-22MHz< f <fc-11MHz and fc+11MHz< f <fc+22MHz ≤ -50 @ f < fc-22MHz and f > fc+22MHz
Power ramp on/off time	≤ 2us
Carrier Suppression	≤ -15dB
Modulation Accuracy (Peak EVM)	≤ 35%
Spurious Emissions	< -36 dBm @ 30MHz ~ 1GHz < -30 dBm above @ 1GHz ~ 12.75GHz < -47 dBm @ 1.8GHz ~ 1.9GHz < -47 dBm @ 5.15GHz ~ 5.3GHz
Rx Min input Sensitivity	≤ -76dBm(1Mbps,2Mbps,5.5Mbps,11Mbps) @ FER ≤ 8%
Rx Max input Sensitivity	≥ -10dBm(1Mbps,2Mbps,5.5Mbps,11Mbps) @ FER ≤ 8%
Rx Adjacent Channel Rejection	≥ 35dB @FER ≤ 8%, interference input signal -70dBm@fc±25MHz(11Mbps)

8) WLAN 802.11g transceiver specification

Item	Specification
Transmit Frequency	2400 MHz ~ 2483.5 MHz (CH1~CH13)
Tx Power Level	≤ 20dBm under (Europe), ≤ 30dBm under (USA)
Frequency Tolerance	within ±25 PPM
Chip clock Frequency Tolerance	within ±25 PPM
Spectrum Mask	≤ -20 @ ±11MHz offset (9Mhz ~ 11MHz) ≤ -28 @ ±20MHz offset (11MHz ~ 20Mhz) ≤ -40 @ ±30MHz offset (20MHz ~ 30Mhz)
Transmitter constellation error (rms EVM)	≤ -5dB
Spurious Emissions	< -36 dBm @ 30MHz ~ 1GHz < -30 dBm above @ 1GHz ~ 12.75GHz < -47 dBm @ 1.8GHz ~ 1.9GHz < -47 dBm @ 5.15GHz ~ 5.3GHz
Rx Min input Sensitivity	PER ≤ 10% -82dBm@6Mbps, -81dBm@9Mbps, -79dBm@12Mbps -77dBm@18Mbps, -74dBm@24Mbps, -70dBm@36Mbps -66dBm@48Mbps, -65dBm@54Mbps
Rx Max input Sensitivity	≥ -20dBm(6,9,12,18,24,36,48,54Mbps) @ PER ≤ 10%
Rx Adjacent Channel Rejection	PER ≤ 10%, ACR ≥ 16dB@6Mbps, ACR ≥ 15dB@9Mbps, ACR ≥ 13dB@12Mbps, ACR ≥ 11dB@18Mbps, ACR ≥ 8dB@24Mbps, ACR ≥ 4dB@36Mbps ACR ≥ 0dB@48Mbps, ACR ≥ -1dB@54Mbps ※ ACR shall be measured by setting the desired signal's strength 3 dB above the rate-dependent sensitivity specified in min input sensitivity

9) WLAN 802.11n transceiver specification

Item	Specification
Transmit Frequency	2400 MHz ~ 2483.5 MHz (CH1~CH13)
Tx Power Level	≤ 20dBm under (Europe), ≤ 30dBm under (USA)
Frequency Tolerance	within ±25 PPM
Chip clock Frequency Tolerance	within ±25 PPM
Spectrum Mask	≤ -20 @ ±11MHz offset (9Mhz ~ 11MHz) ≤ -28 @ ±20MHz offset (11MHz ~ 20Mhz) ≤ -45 @ ±30MHz offset (20MHz ~ 30Mhz)
Transmitter constellation error (rms EVM)	≤ -5dB@6.5Mbps, ≤ -10dB@13Mbps, ≤ -13dB@19.5Mbps, ≤ -16dB@26Mbps, ≤ -19dB@39Mbps, ≤ -22dB@52Mbps, ≤ -25dB@58.5Mbps, ≤ -28dB@65Mbps
Spurious Emissions	< -36 dBm @ 30MHz ~ 1GHz < -30 dBm above @ 1GHz ~ 12.75GHz < -47 dBm @ 1.8GHz ~ 1.9GHz < -47 dBm @ 5.15GHz ~ 5.3GHz
Rx Min input Sensitivity	PER ≤ 10% -82dBm@6.5Mbps, -79dBm@13Mbps, -77dBm@19.5Mbps -74dBm@26Mbps, -70dBm@39Mbps, -66dBm@52Mbps -65dBm@58.5Mbps, -64dBm@65Mbps
Rx Max input Sensitivity	≥ -20dBm(6.5,13,19.5,26,39,52,58.5,65Mbps) @ PER ≤ 10%
Rx Adjacent Channel Rejection	PER ≤ 10%, ACR ≥ 16dB@6.5Mbps, ACR ≥ 13dB@13Mbps, ACR ≥ 11dB@19.5Mbps, ACR ≥ 8dB@26Mbps, ACR ≥ 4dB@39Mbps, ACR ≥ 0dB@52Mbps ACR ≥ -1dB@58.5Mbps, ACR ≥ -2dB@65Mbps ※ ACR shall be measured by setting the desired signal's strength 3 dB above the rate-dependent sensitivity specified in min input sensitivity

10) GPS receiver specification

Item	Spec.
Sensitivity Test	Success rate ≥ 60% @ -154 dBm

11) Current consumption

** Test condition for Standby current consumption should be as below.

: Measurement time 1hr, with Agilent & CMT JIG

Item	Specification	
	WCDMA	GSM
1. Sleep Mode	Under 3.5mA	Under 3.5mA
2. Sleep : connector Ear jack	Under 4.5mA	Under 4.5mA
3. Current(Sleep & Idle AVG)	Under 4.5mA @ DRX 7	Under 4.5mA @ P.P 5
4. BT Connected idle	Under 6mA	Under 6mA
5. Talk Mode	- Max Pwr Under 600mA @ Avg - Tx 10dBm Under 400 mA @ Avg	GSM LVL 5 Under 400mA @ Avg.
6. No SVC Mode	Under 200mA	Under 200 mA
7. Power Off Mode	Under 300uA	Under 300uA

12) RSSI indicator (Based on Cell power)

BAR	WCDMA		GSM/DCS/PCS
	Based on RSCP	Based on Cell Power	
5→4	-89 ±2dBm	-86 ±2dBm	-90 ±2dBm
4→3	-94 ±2dBm	-91 ±2dBm	-95 ±2dBm
3→2	-100 ±2dBm	-97 ±2dBm	-98 ±2dBm
2→1	-104 ±2dBm	-101 ±2dBm	-102 ±2dBm
1→0	-110 ±2dBm	-107 ±2dBm	-104 ±2dBm

- measure RSSI 10sec. later after changing Cell power for Stability of Antenna Bar.

- For WCDMA, Uplink Parameters -> Maximum Uplink Transmit Power Level : 24dBm

13) Current consumption

Standby (WCDMA)	Over 520 Hours Under 4.5mA	DRX 7 @ BATT Capacity : 2540mAh

14) Charging hour

Under 5 hour (2540mAh battery, 850mA TA)

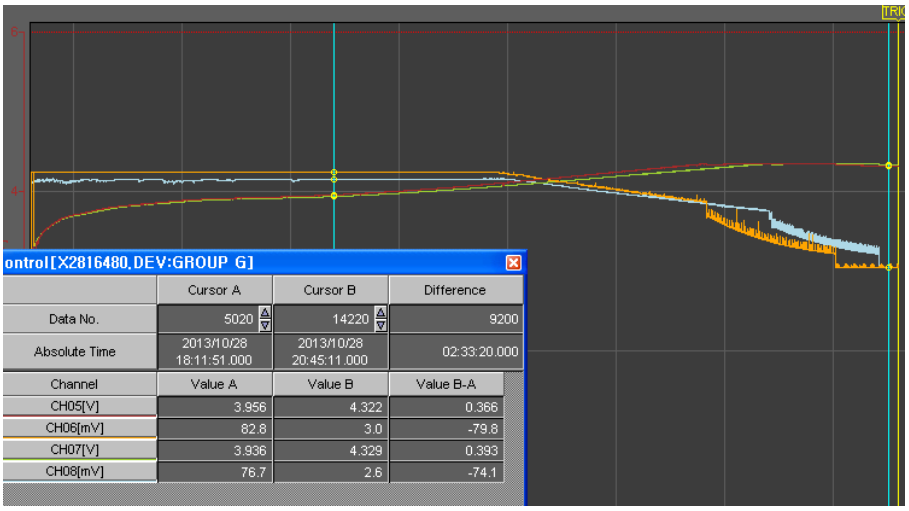

15) Battery indicator

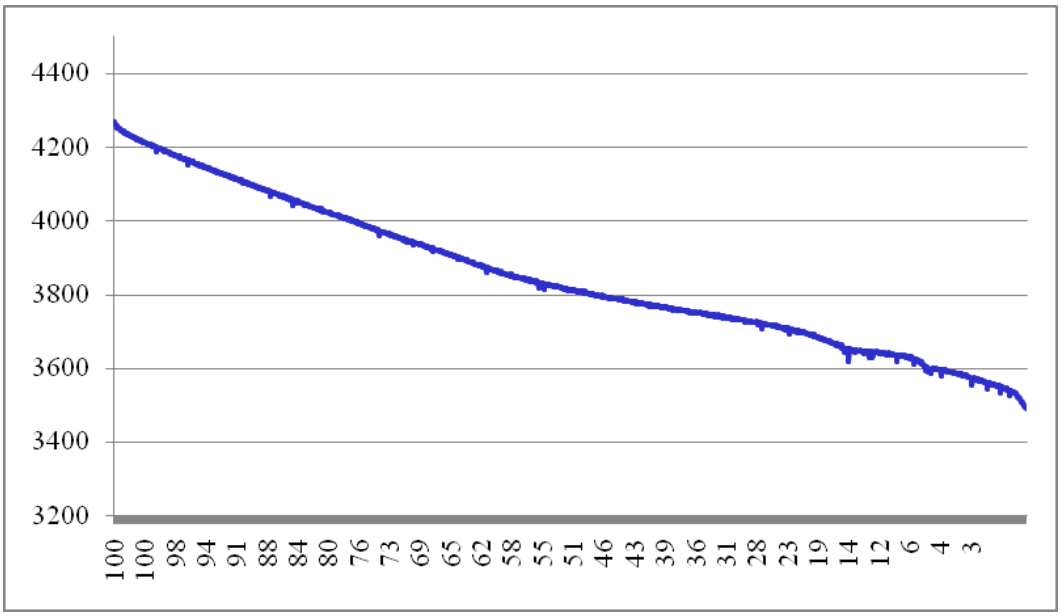

2.6 D373EU Figures

3. TROUBLE SHOOTING

3.1 WCDMA Rx Part Troubleshooting

3.1.1 WCDMA_B1 Rx

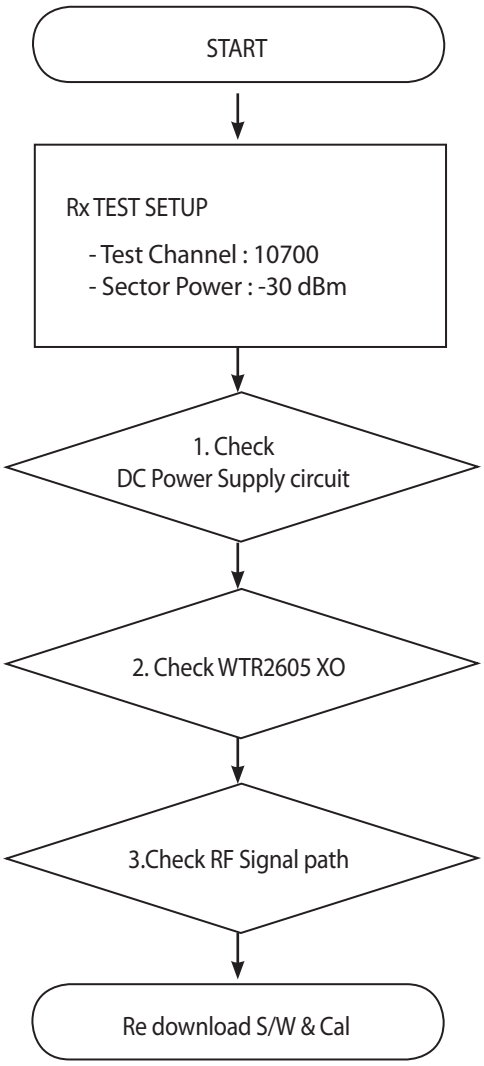

* There are no Test Points on the IQ Data Line. So It is impossible to check the IQ Data Wave form

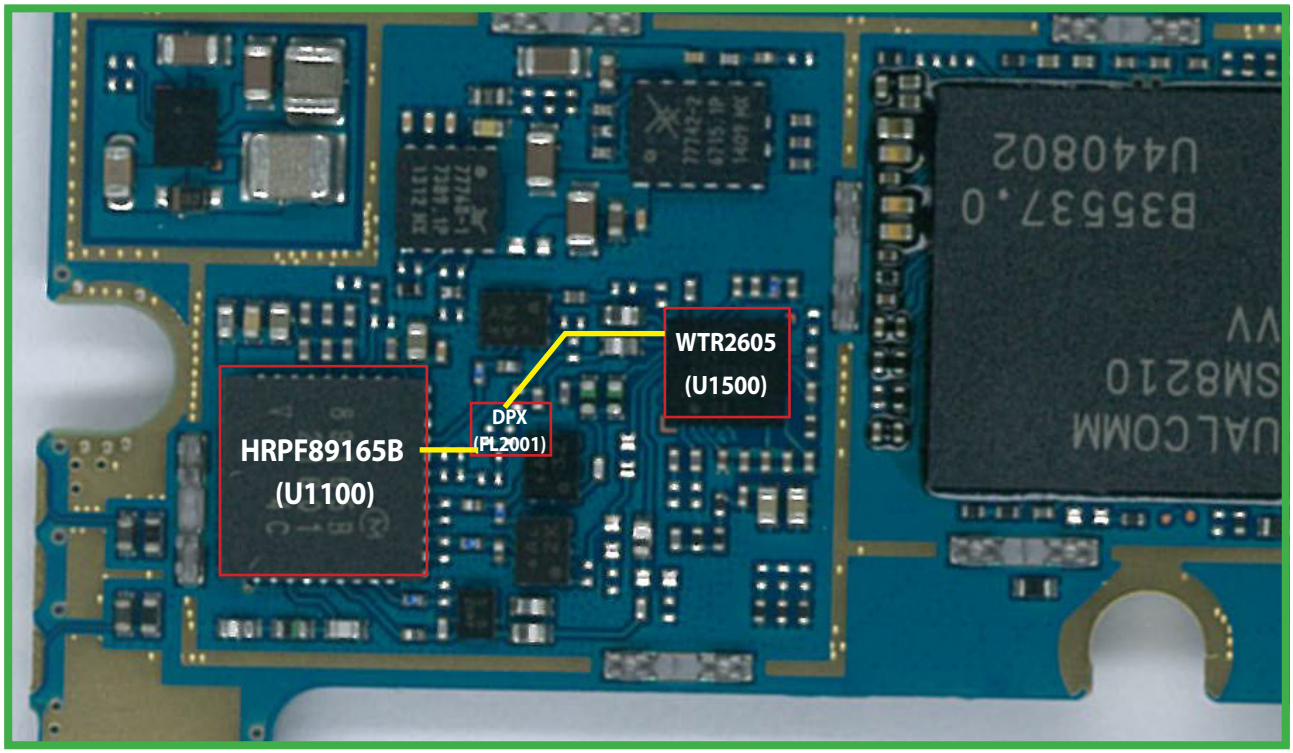

<Main Top>

3.1.1.1 Checking DC Power supply circuit

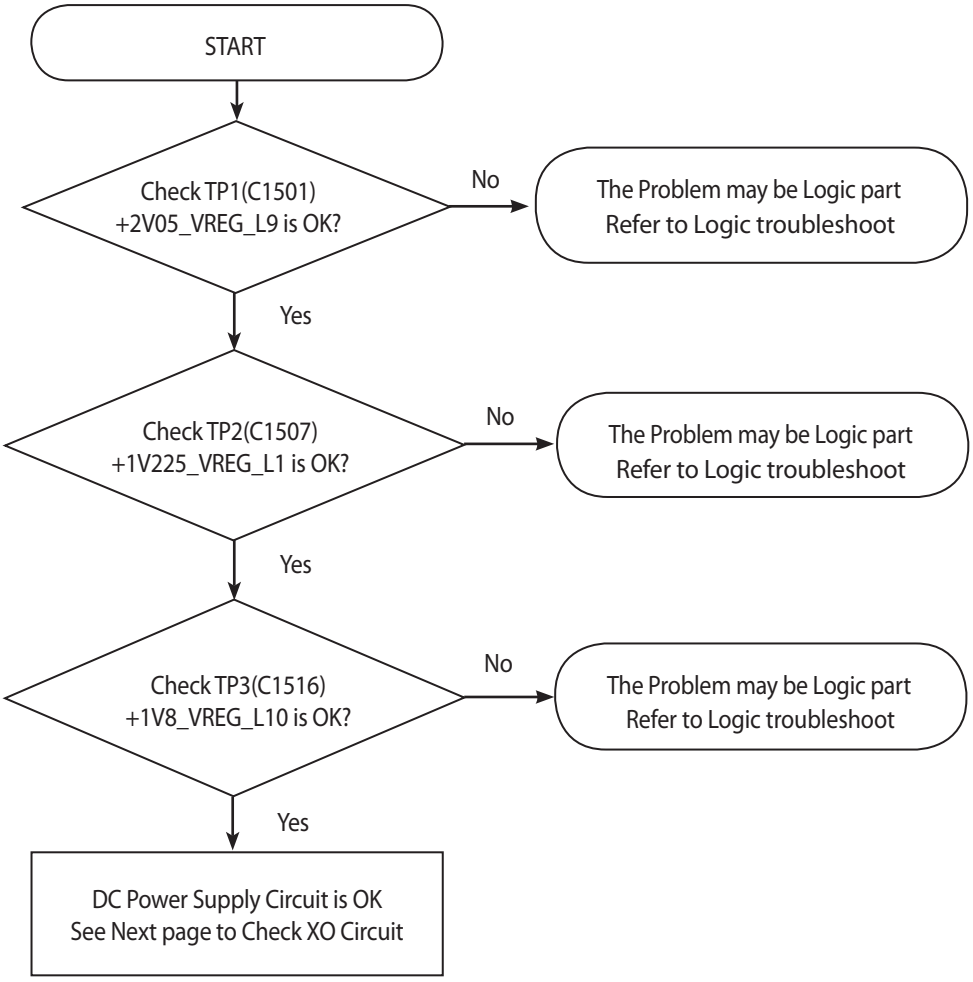

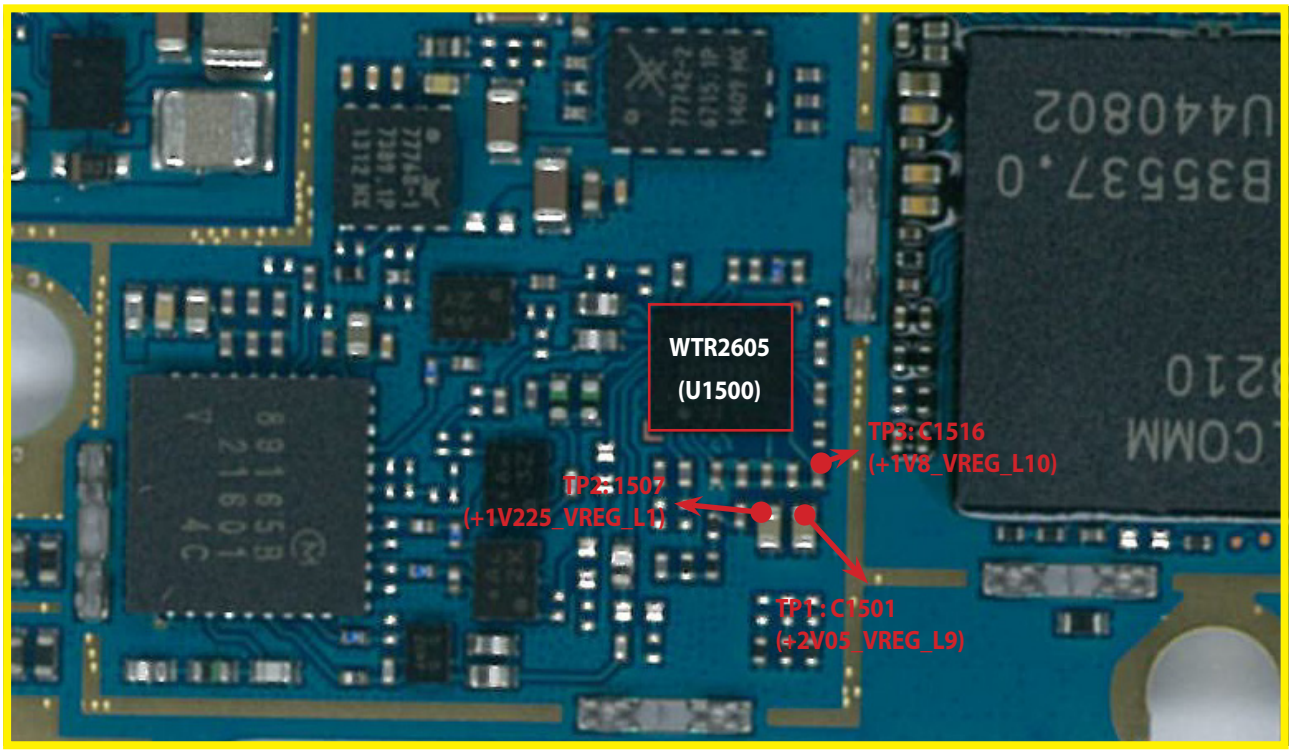

<Main Top>

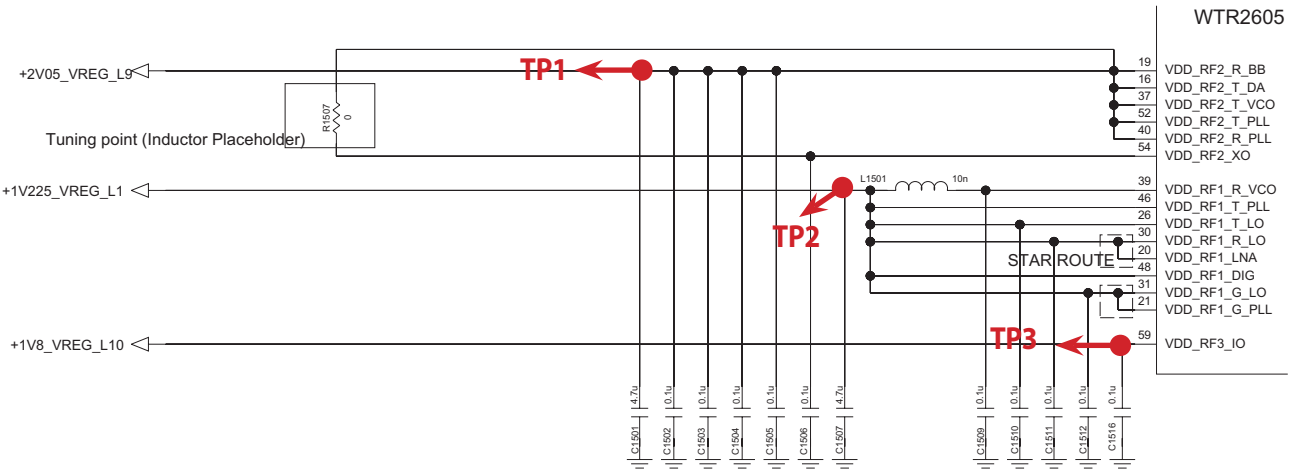

3.1.1.2 Checking WTR2605 XO circuit

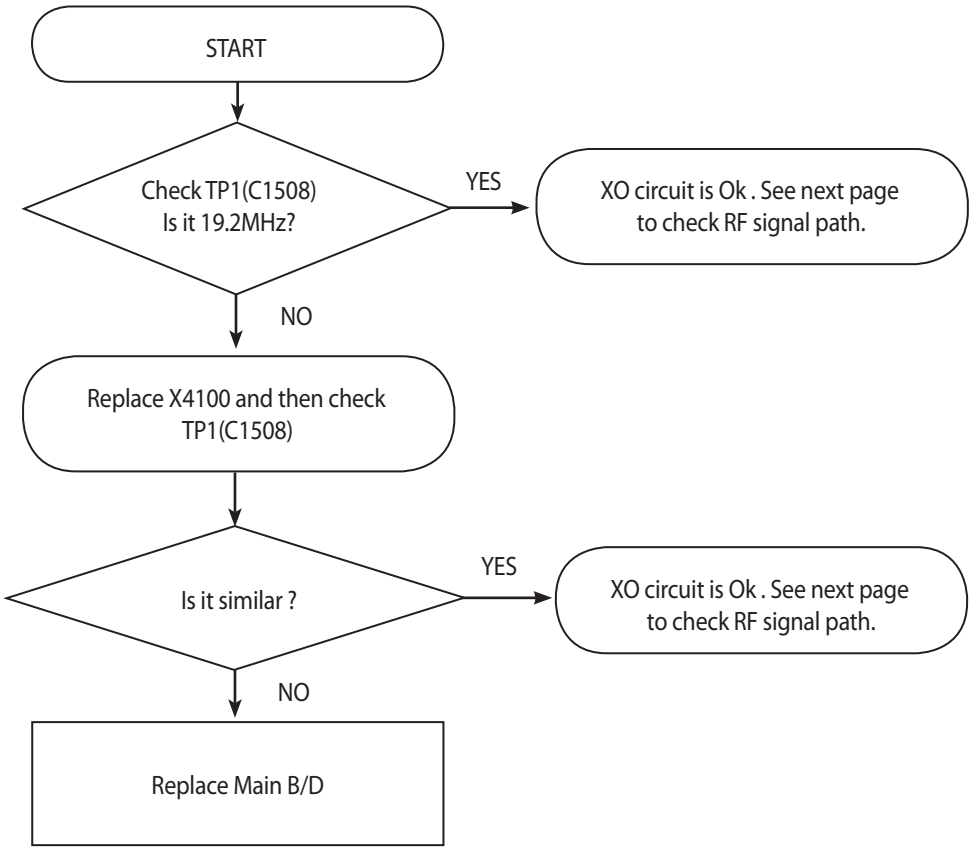

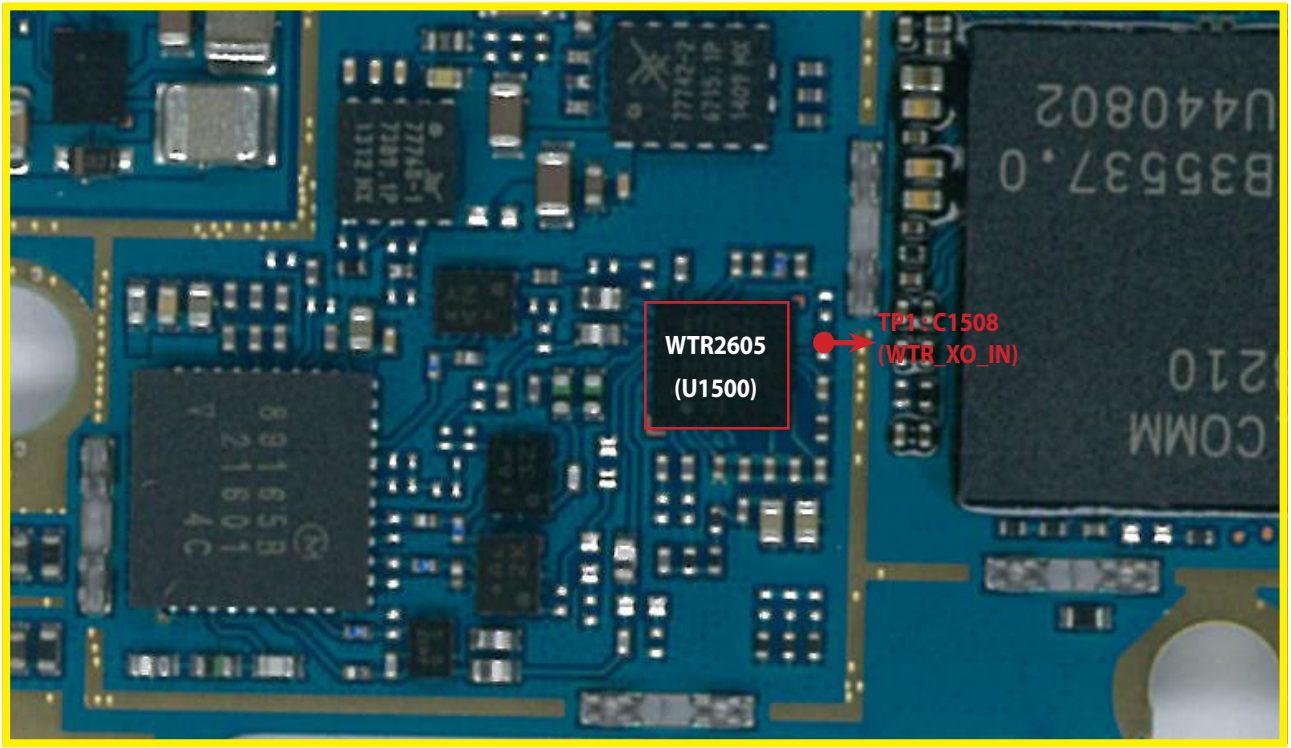

<Main Top>

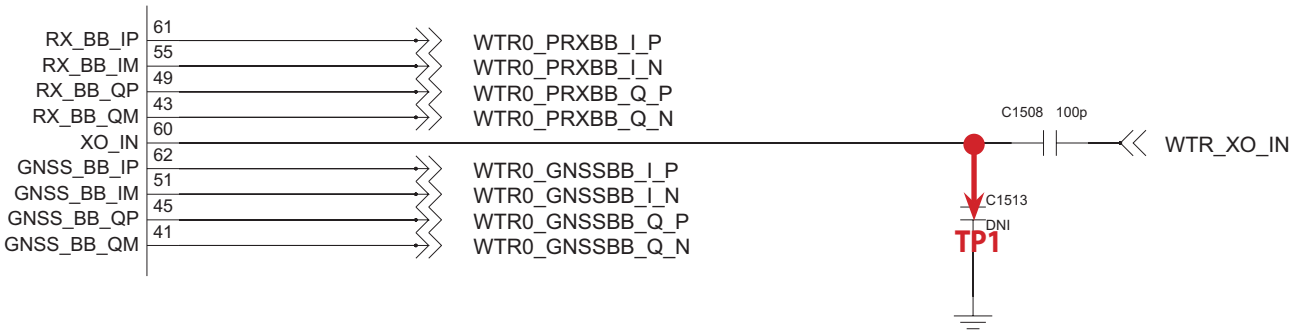

3.1.1.3 Checking RF signal path (TX Module)

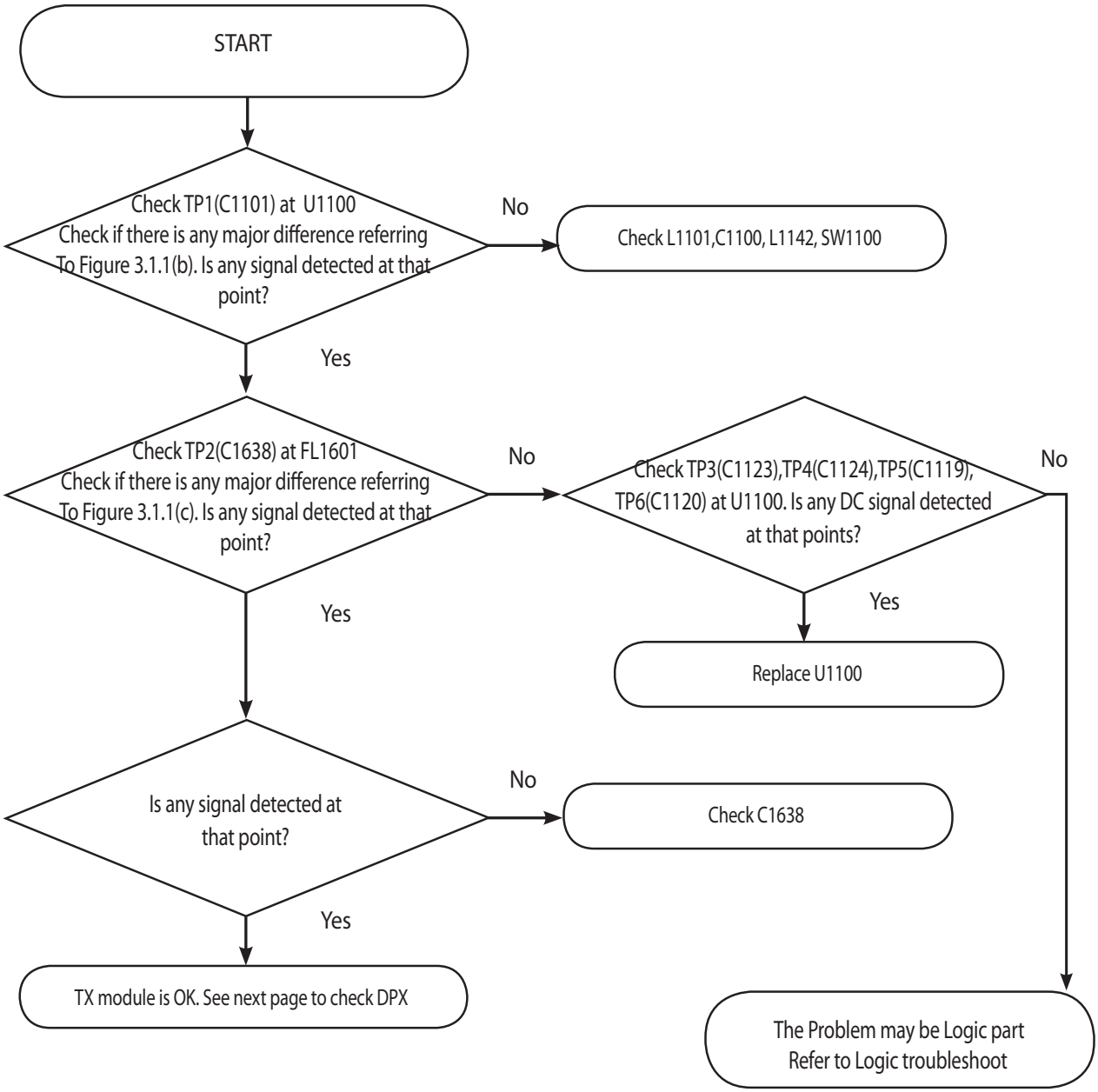

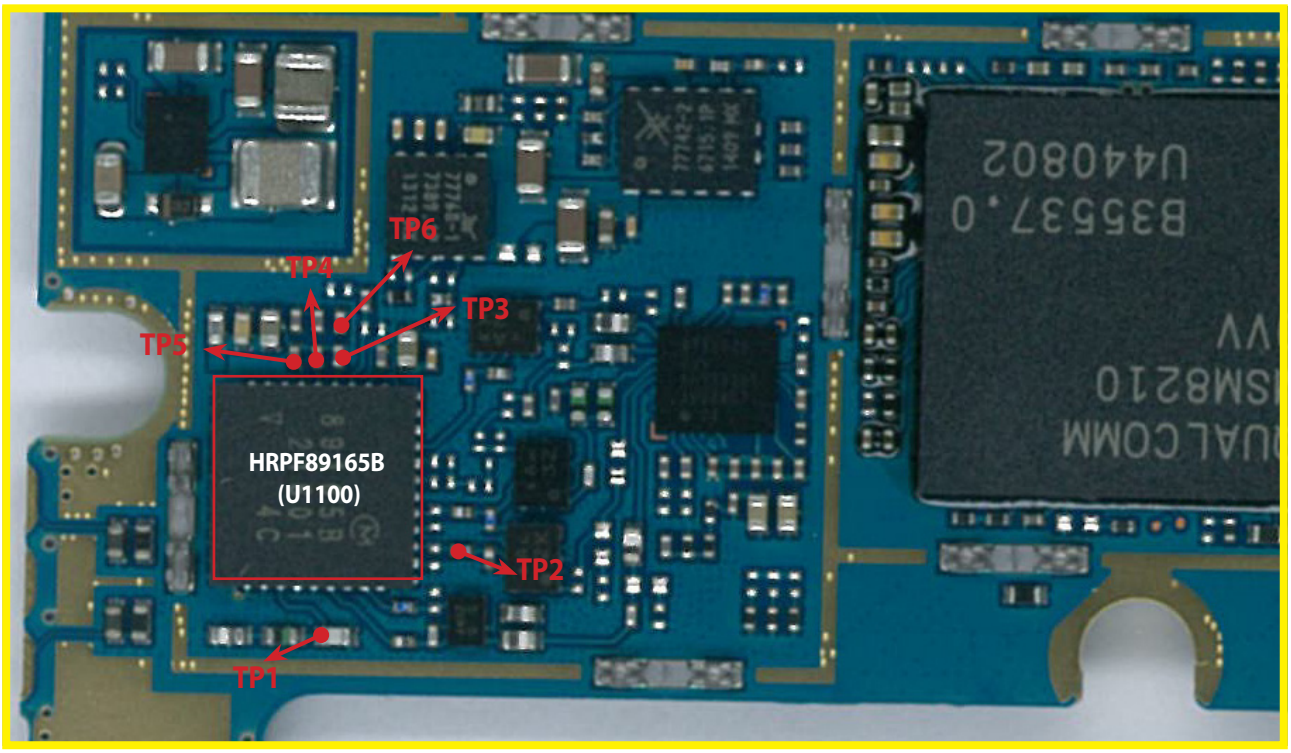

<Main Top>

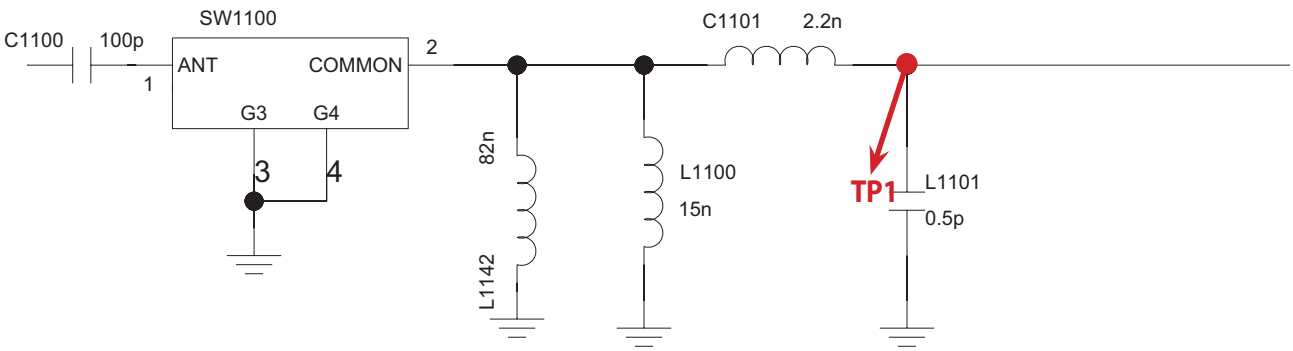

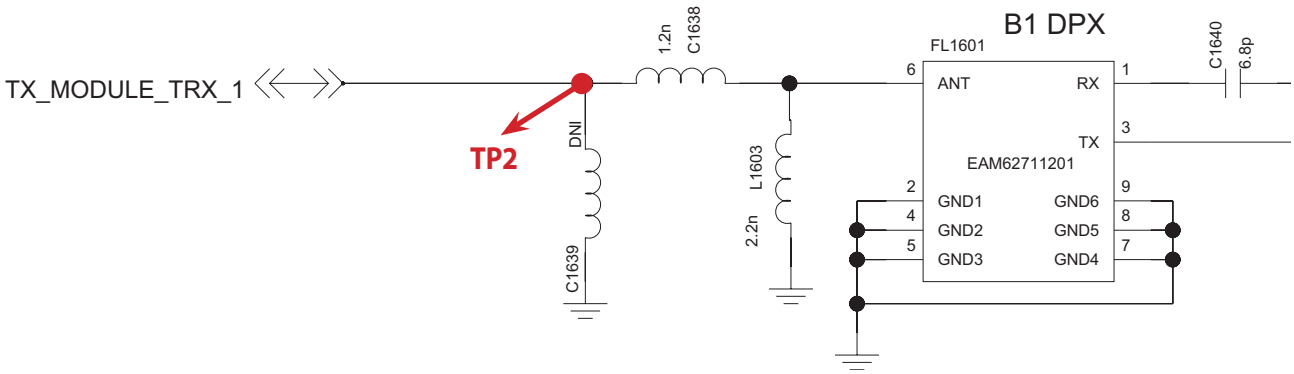

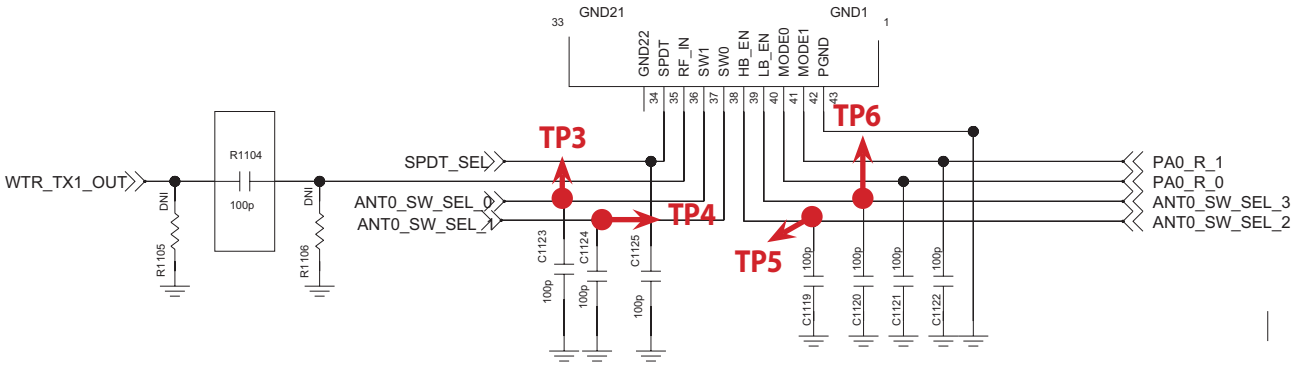

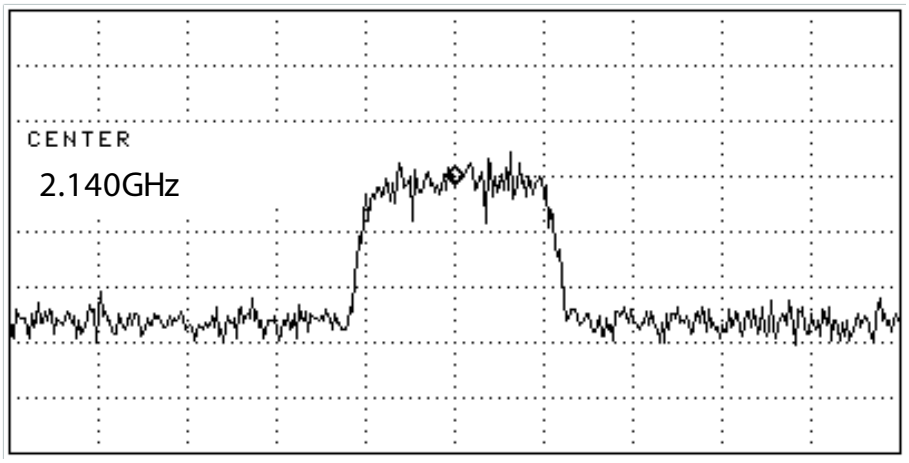

Figure 3.1.1 (b)

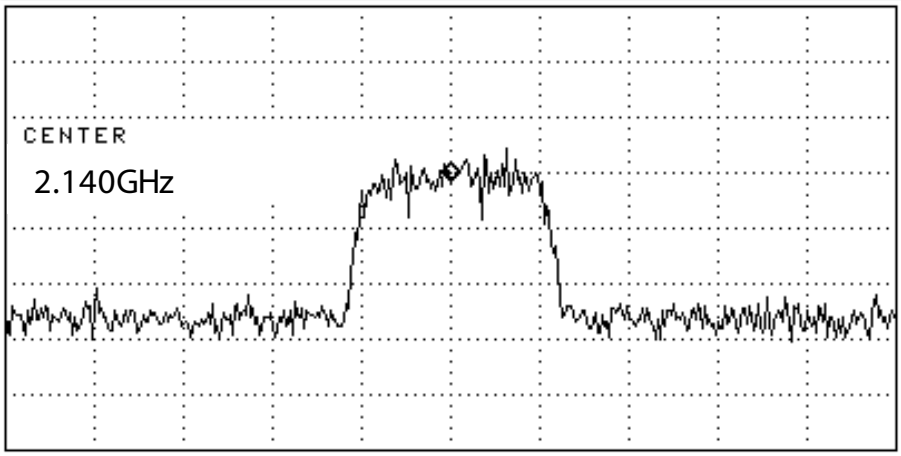

Figure 3.1.1 (c)

3.1.1.4 Checking RF signal path(Duplexer)

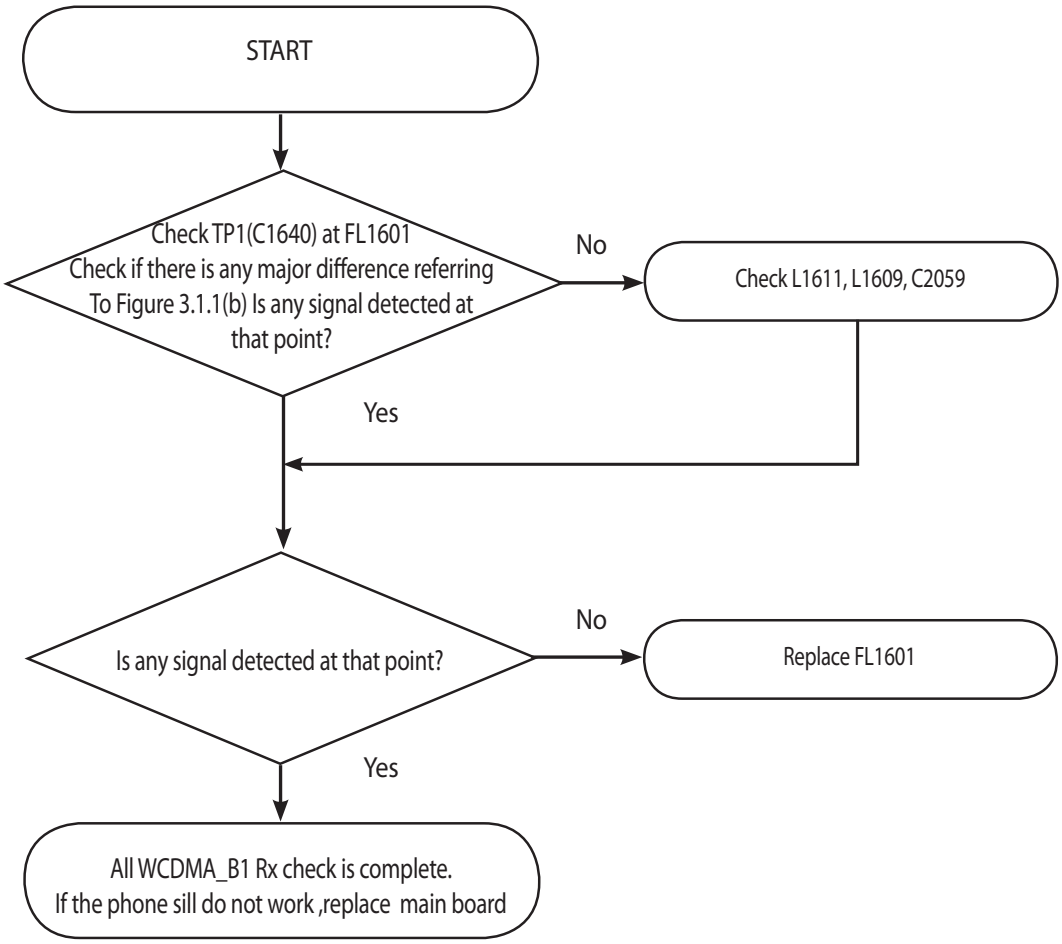

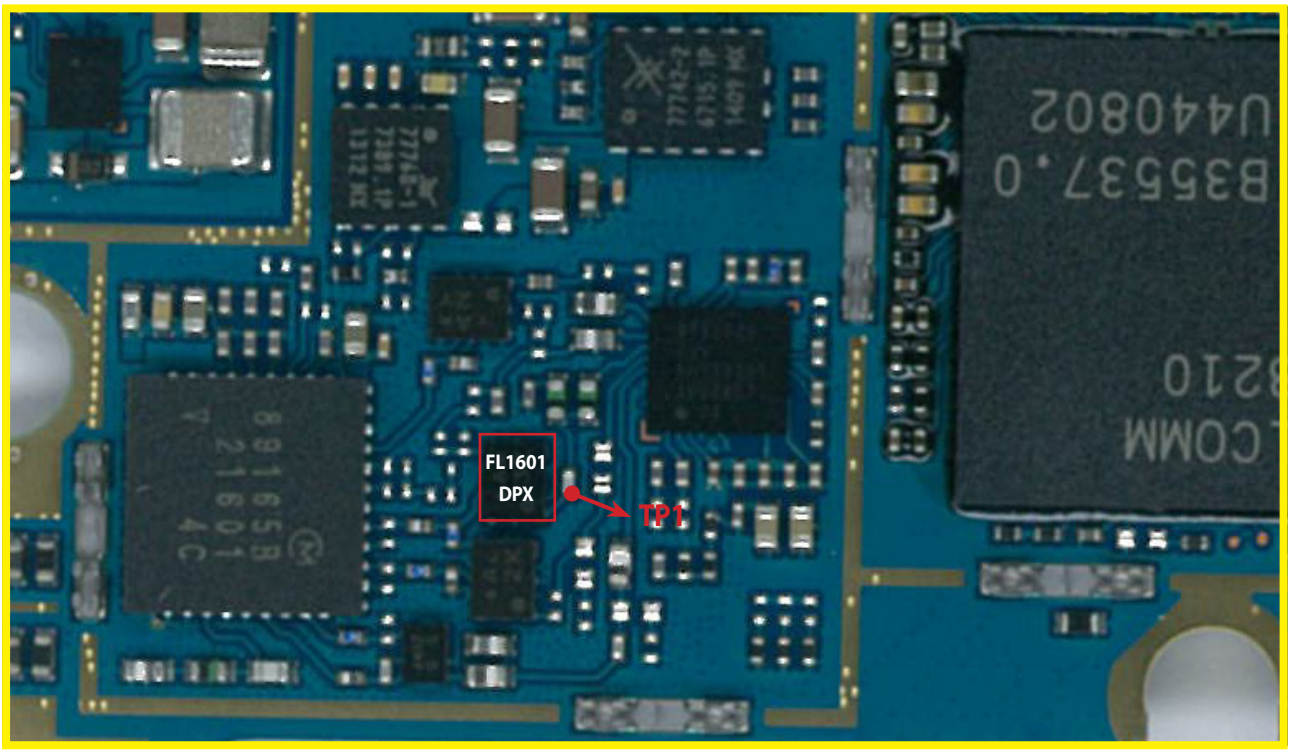

<Main Top>

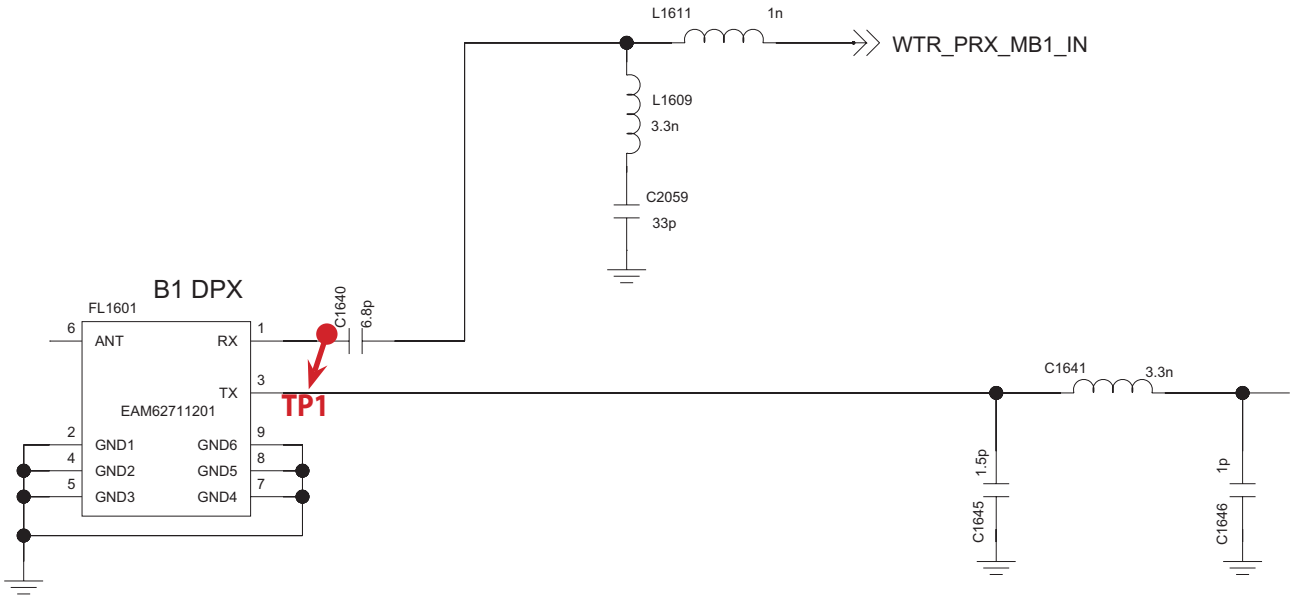

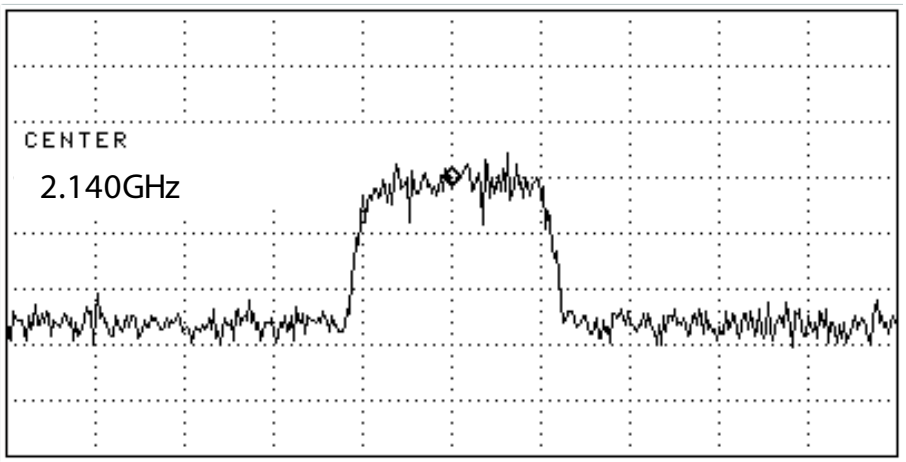

Figure 3.1.1 (b)

3.1.2 WCDMA_B5 Rx

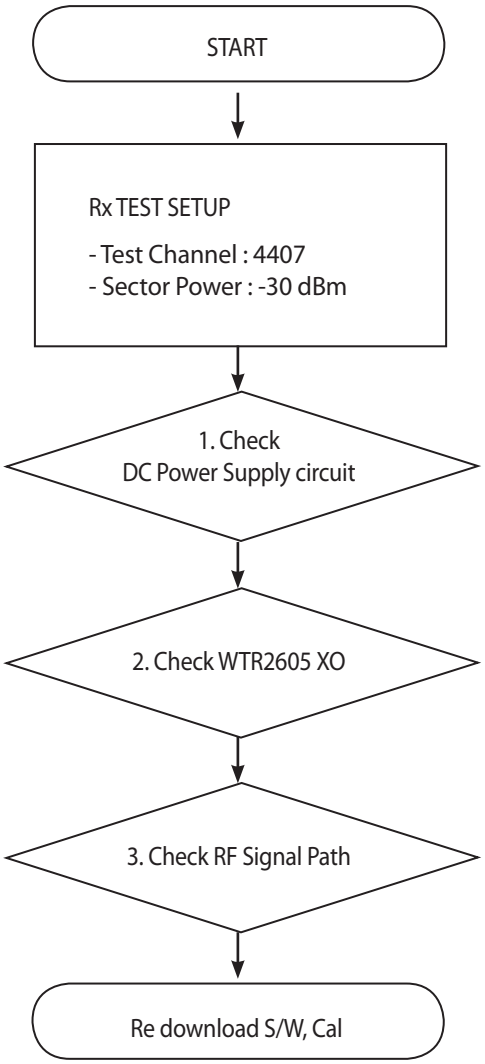

* There are no Test Points on the IQ Data Line. So It is impossible to check the IQ Data Wave form

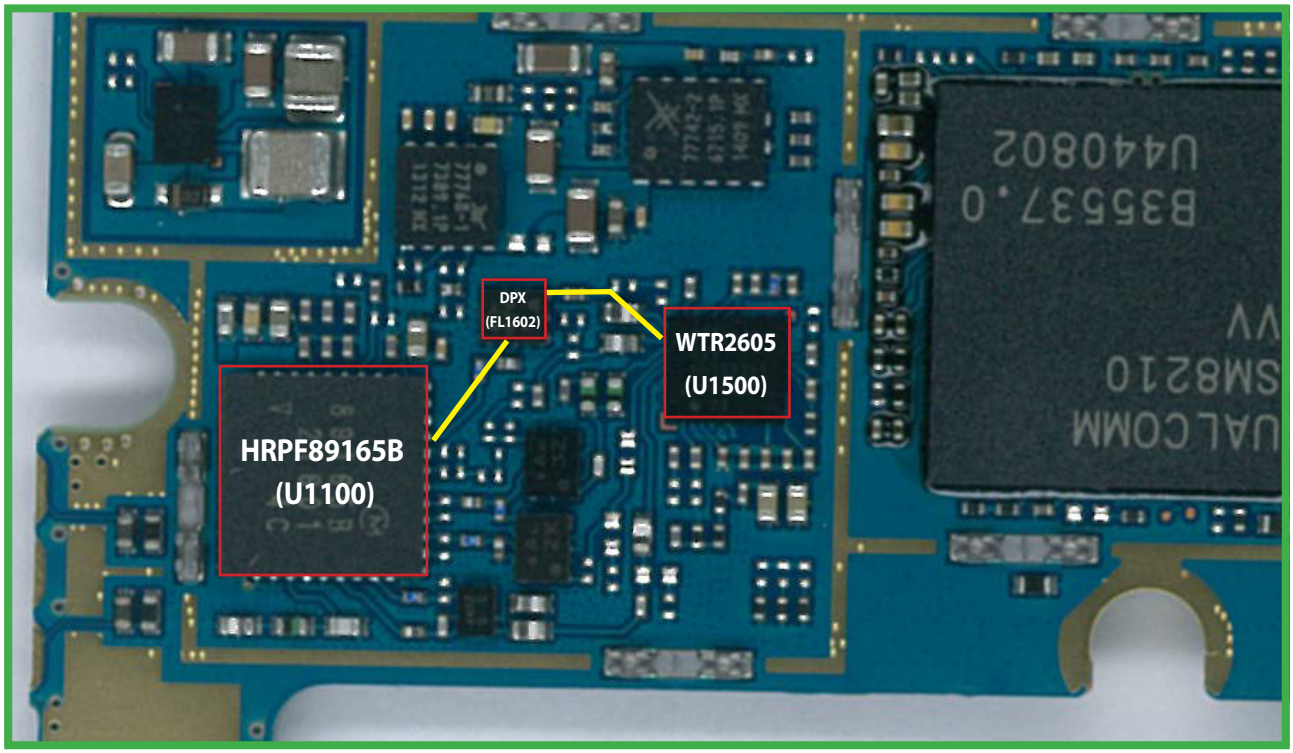

<Main Top>

3.1.2.1 Checking DC Power supply circuit

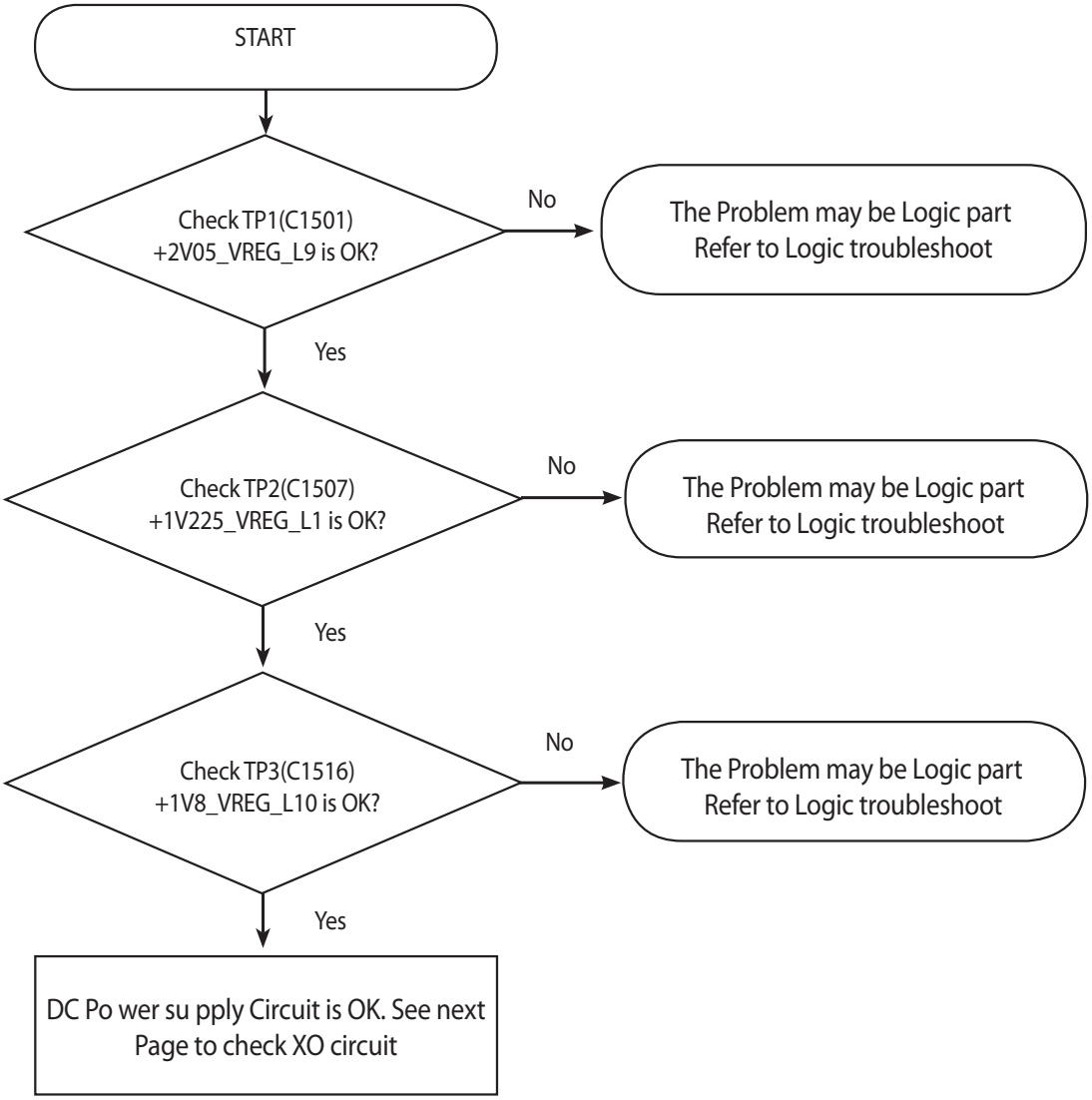

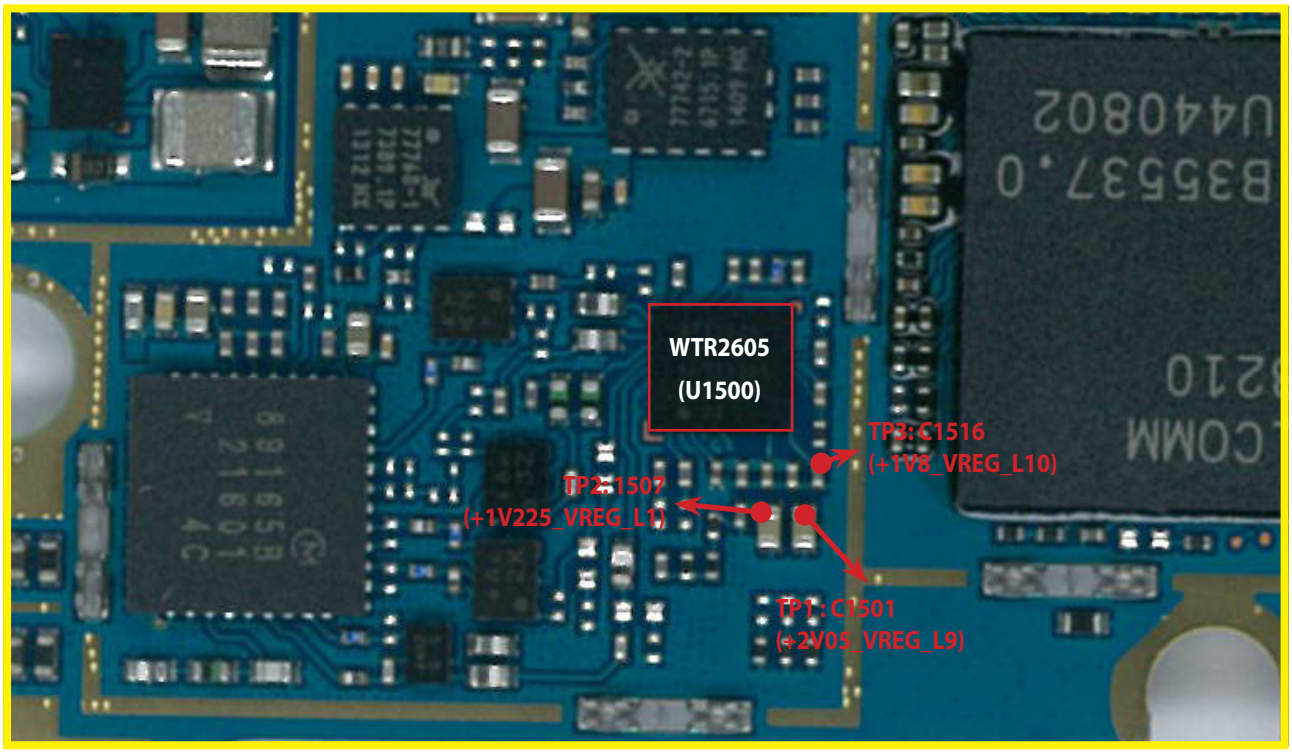

<Main Top>

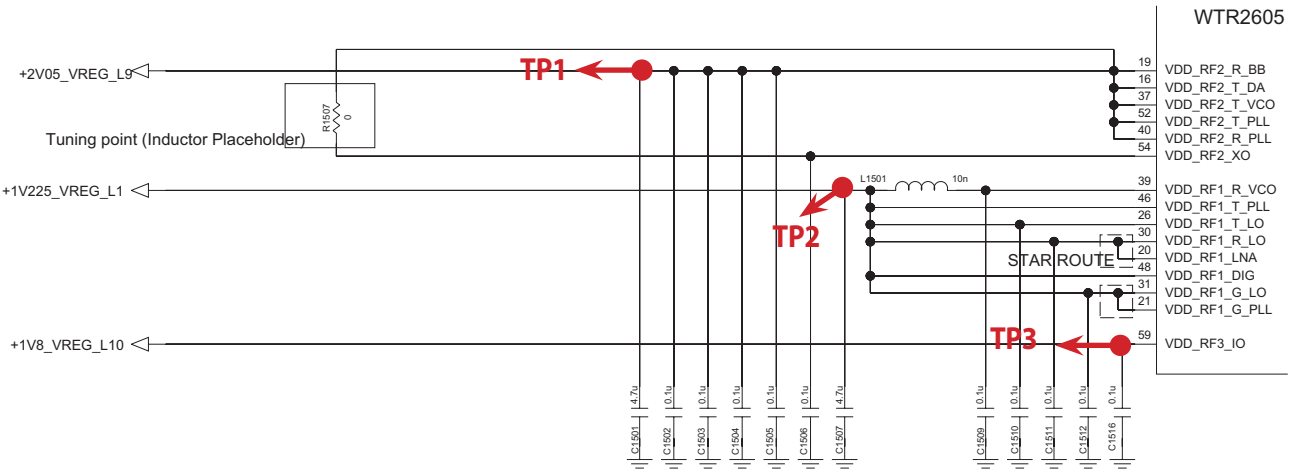

3.1.2.2 Checking MT6162 XO circuit

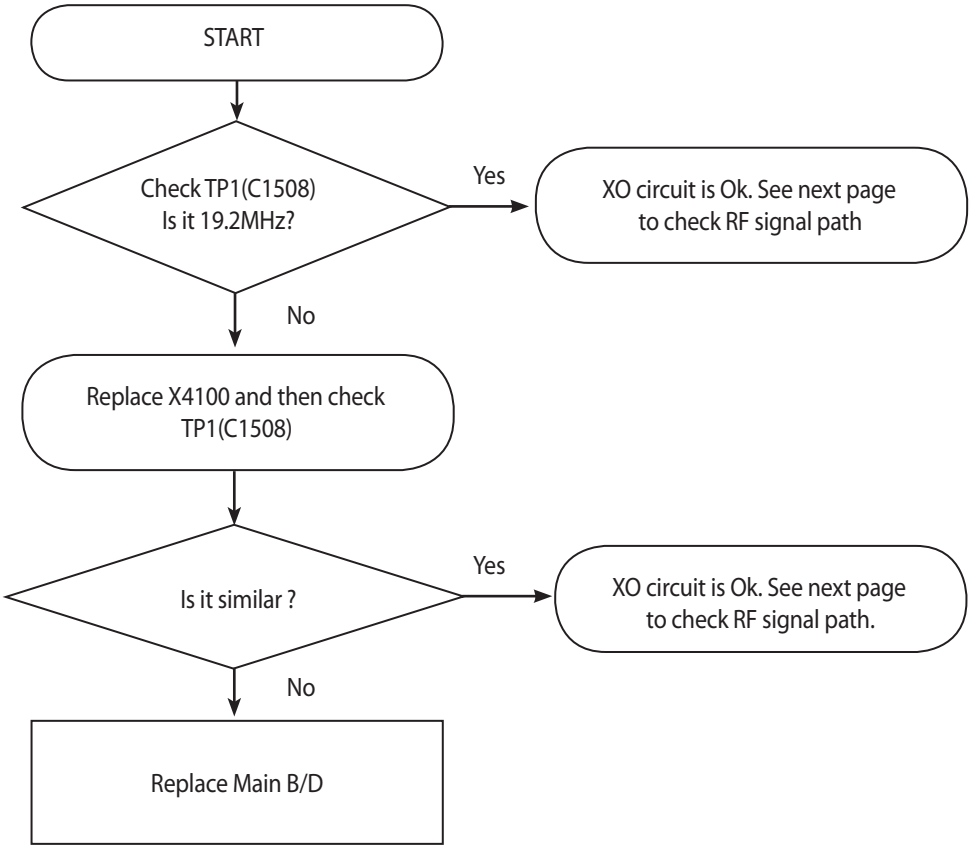

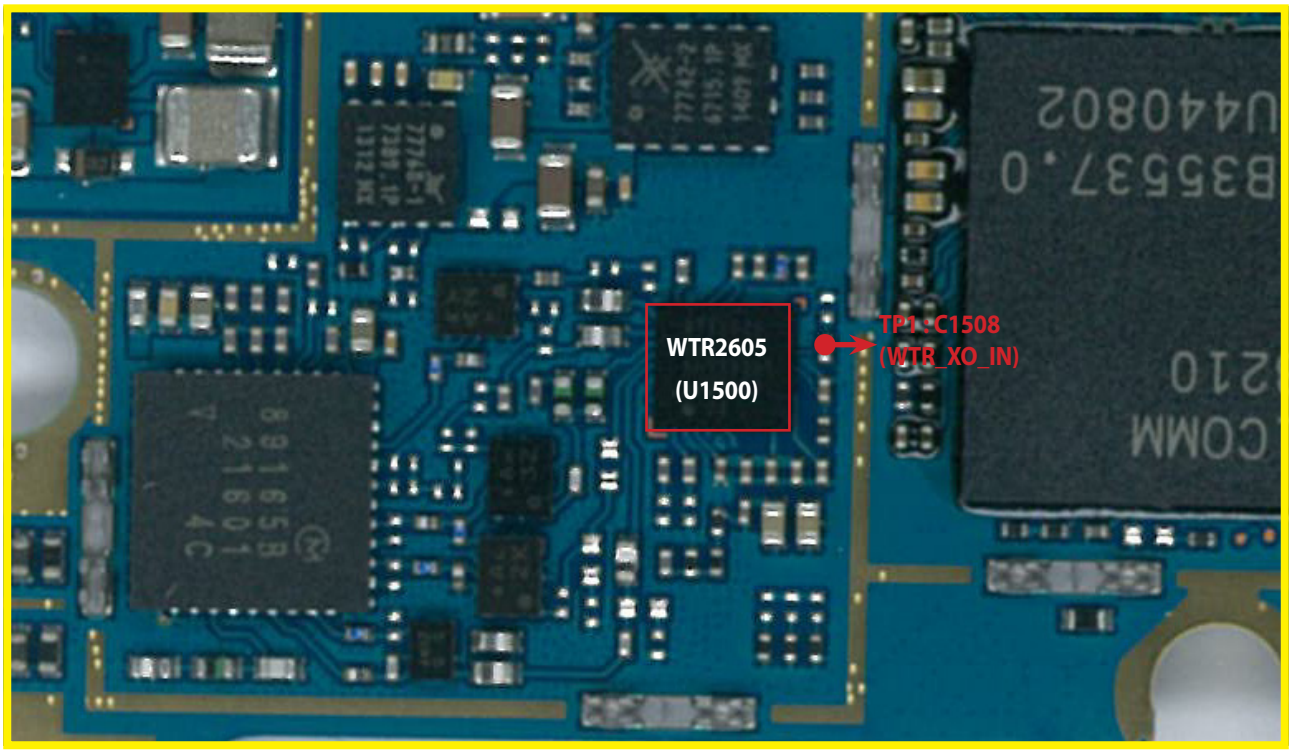

<Main Top>

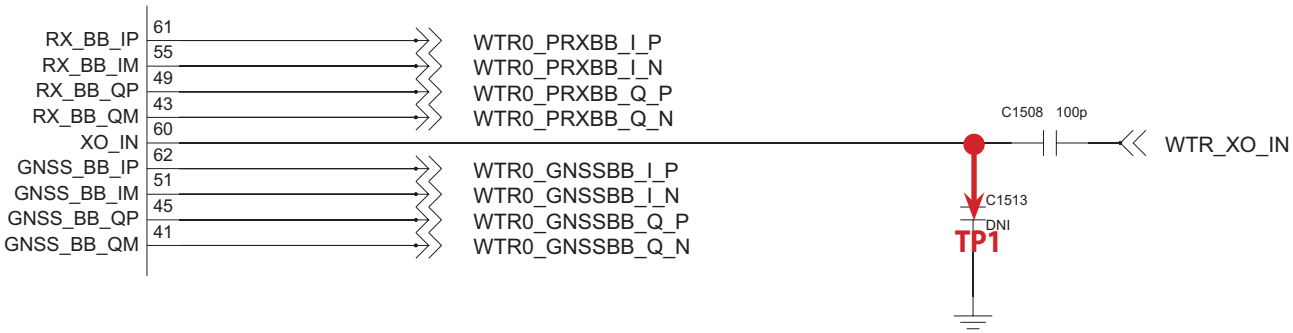

3.1.2.3 Checking RF signal path (Tx Module)

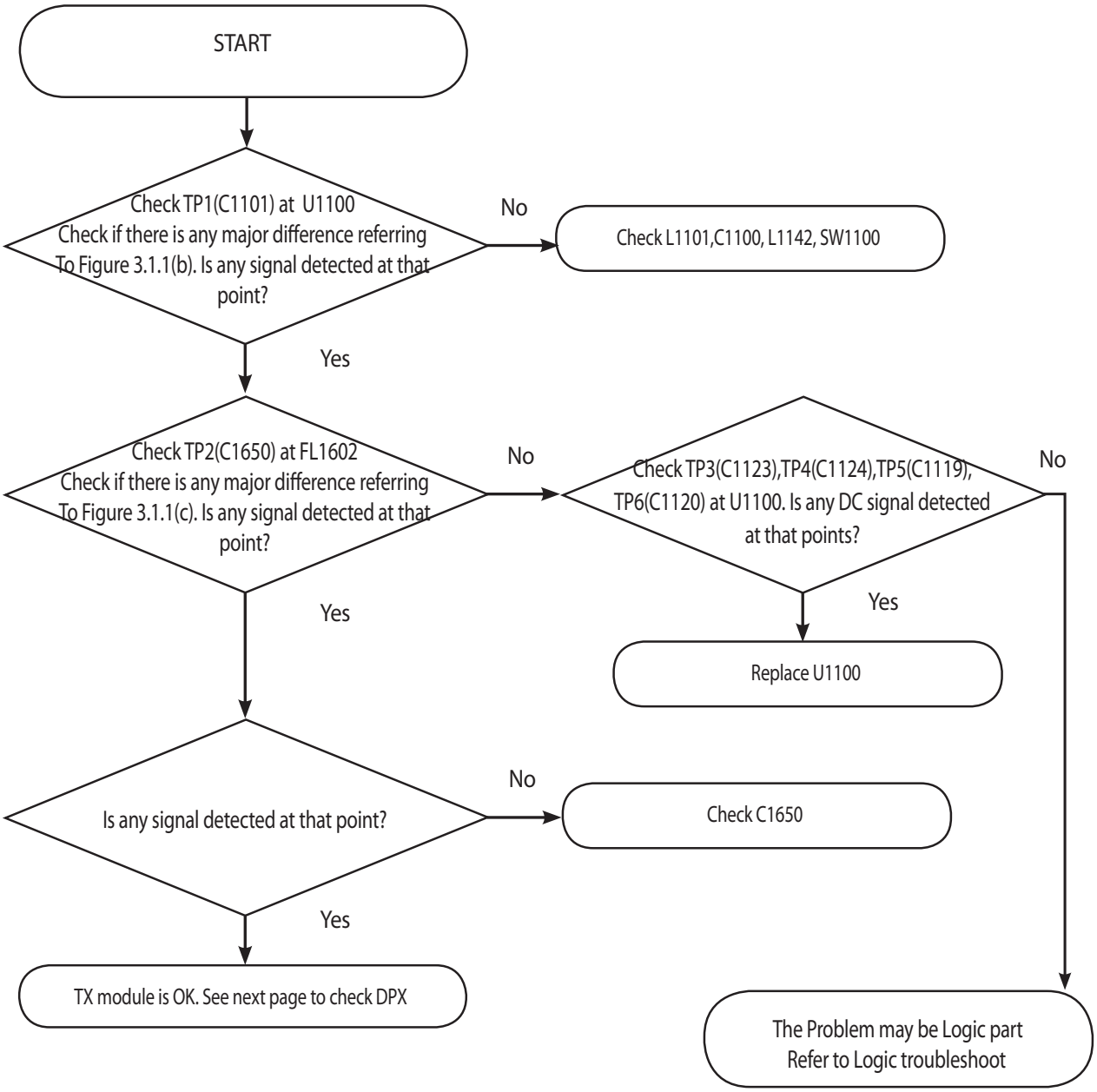

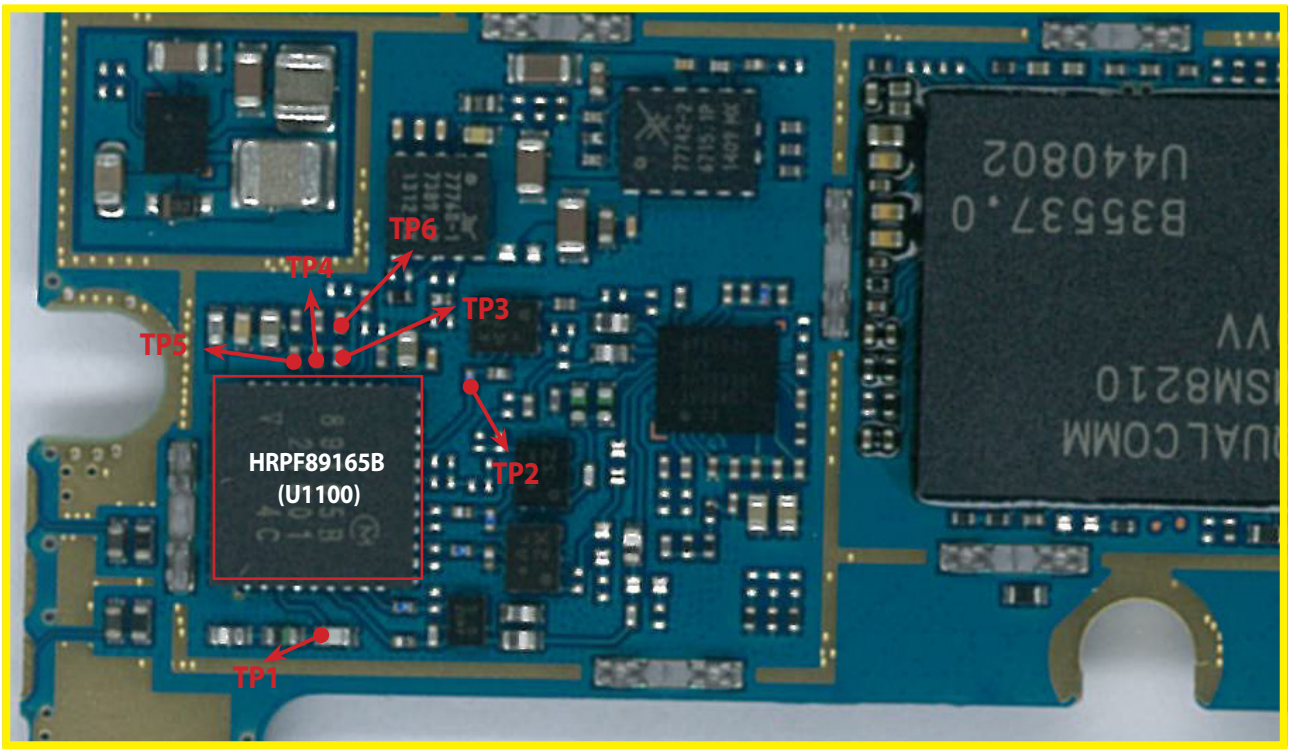

<Main Top>

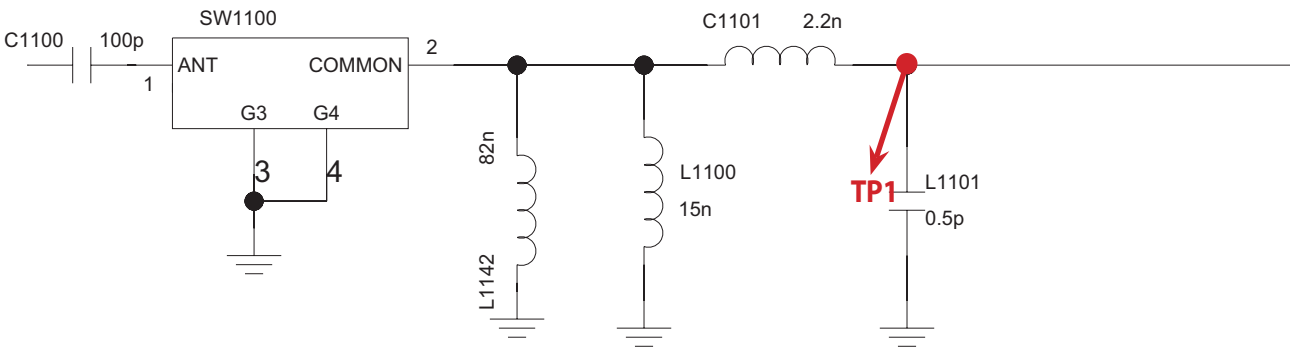

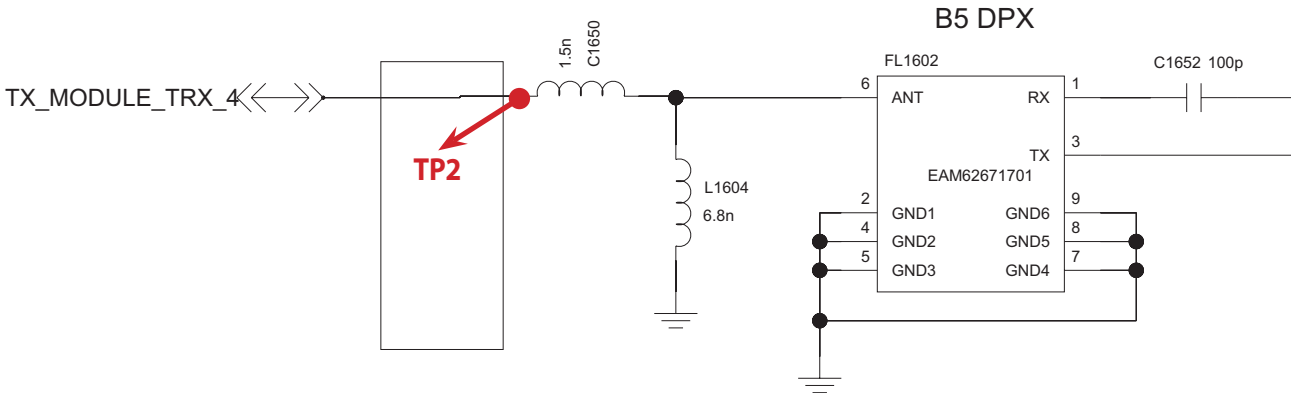

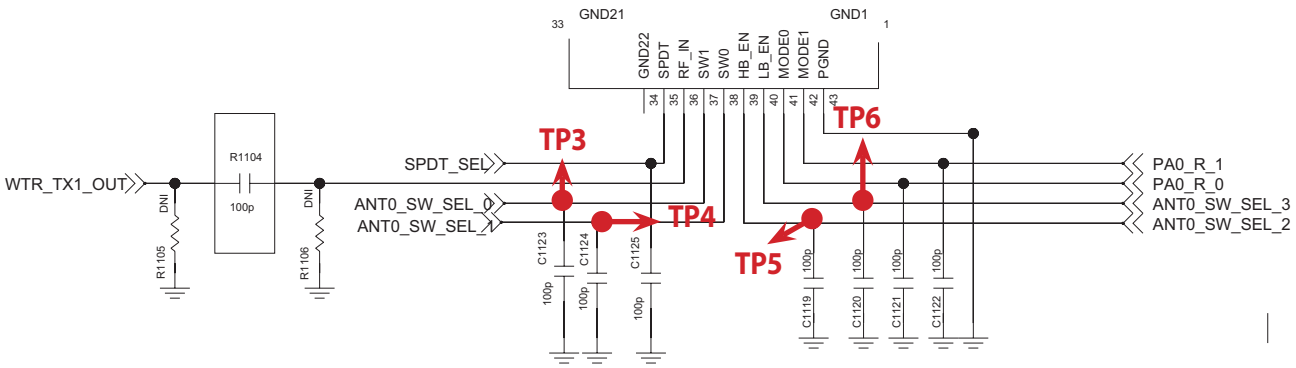

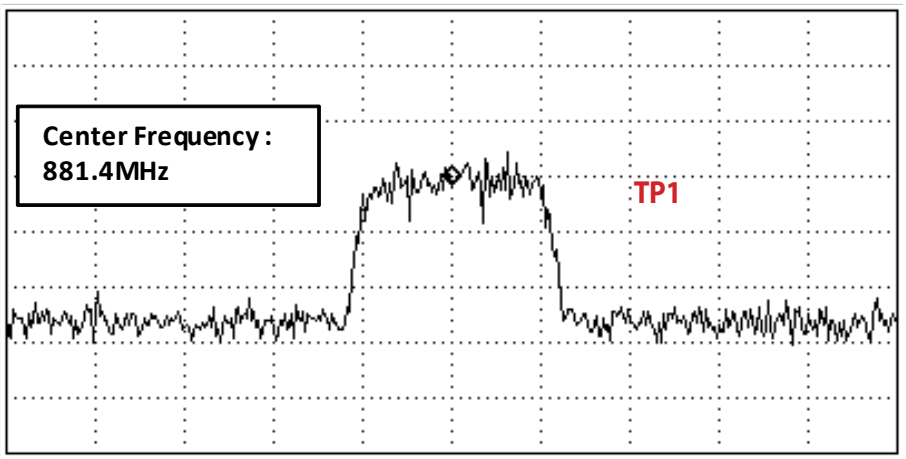

Figure 3.1.1 (b)

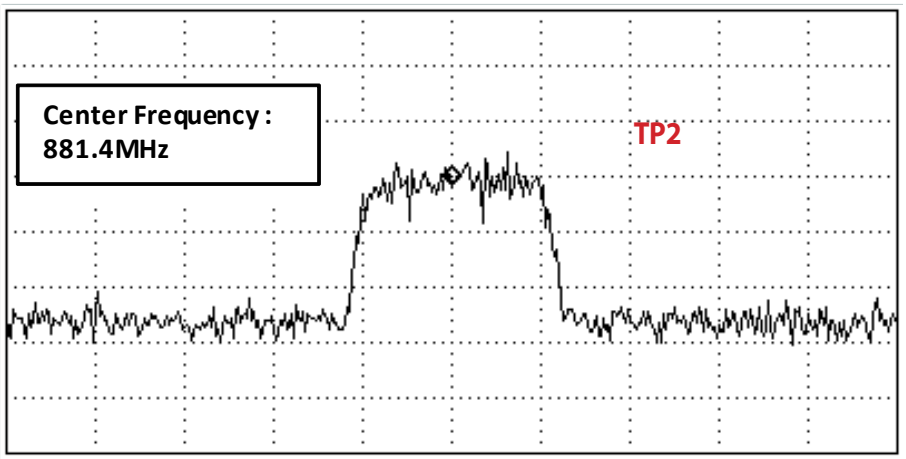

Figure 3.1.1 (c)

3.1.2.4 Checking RF signal path (Duplexer)

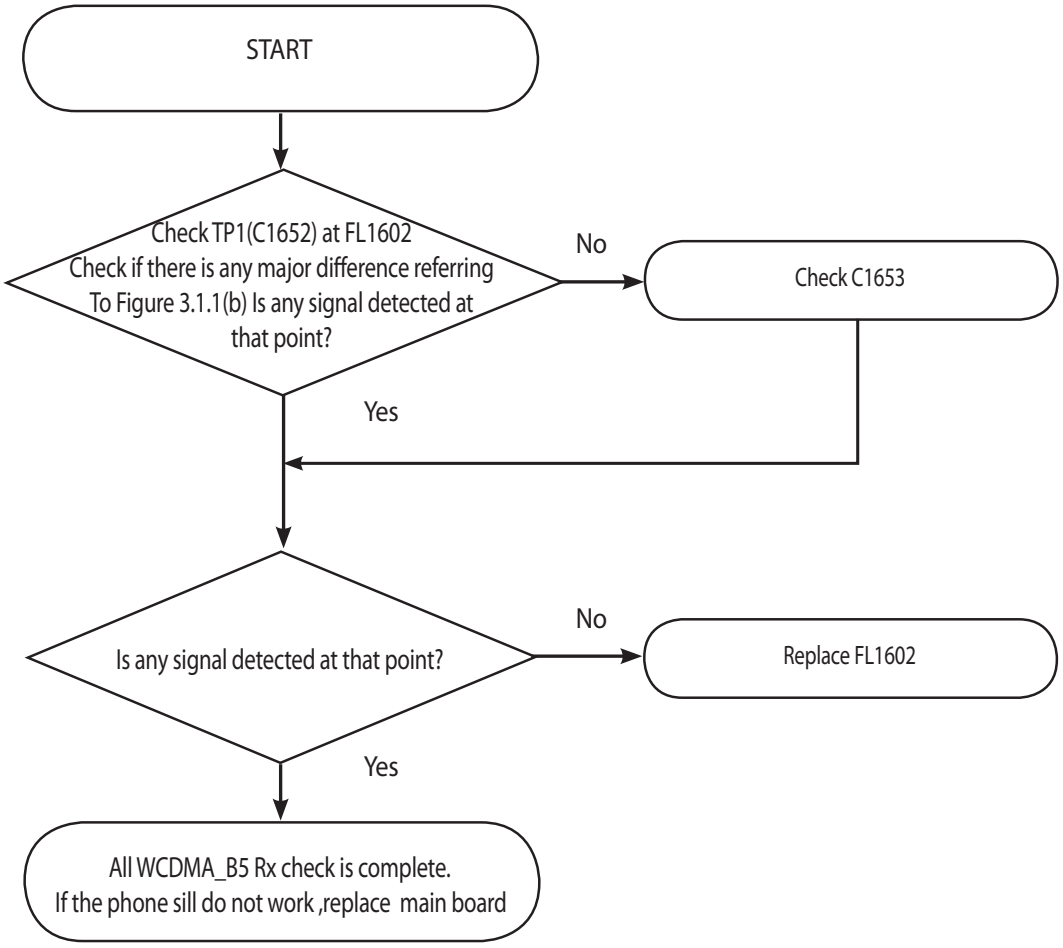

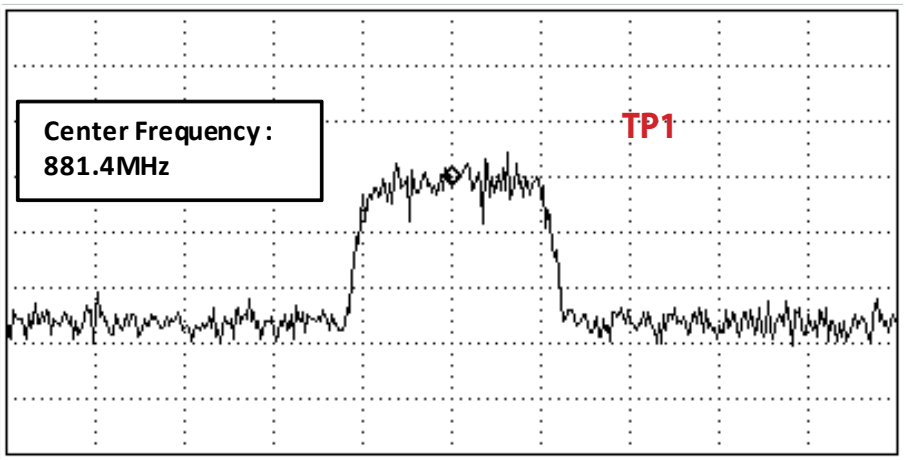

Figure 3.1.1 (b)

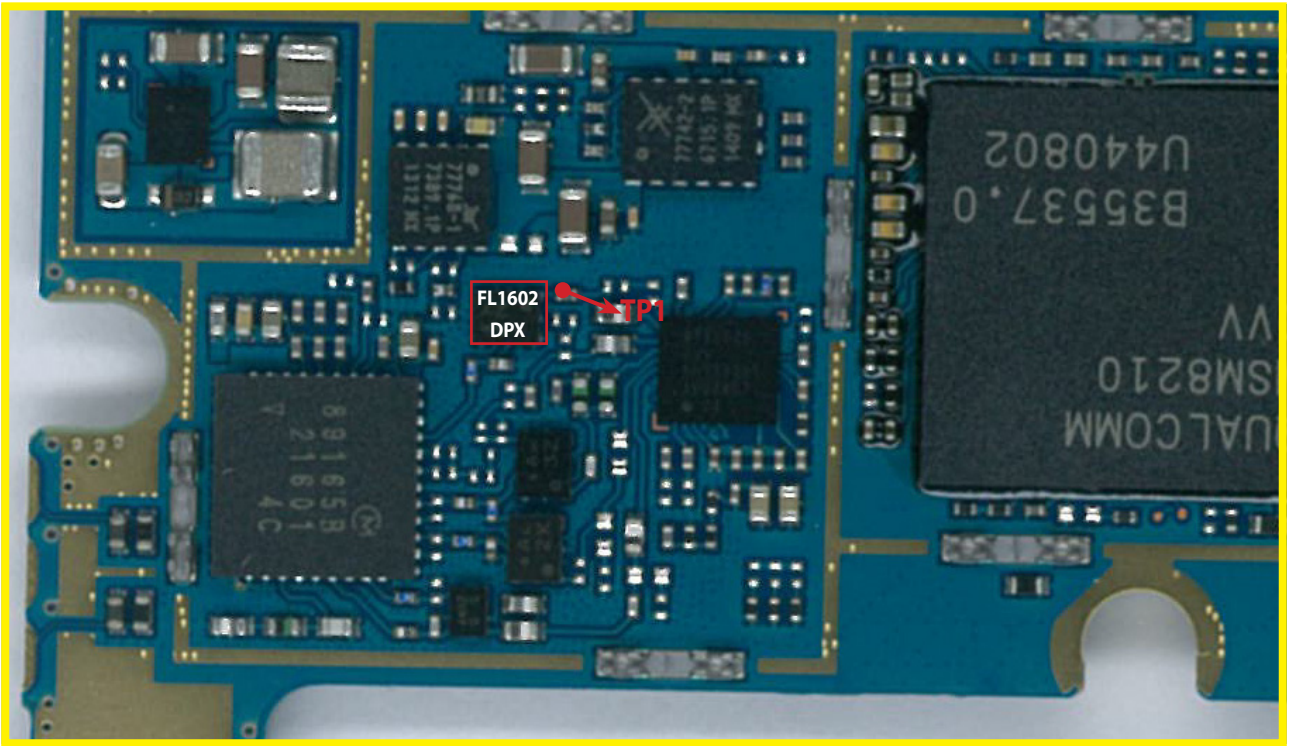

<Main Top>

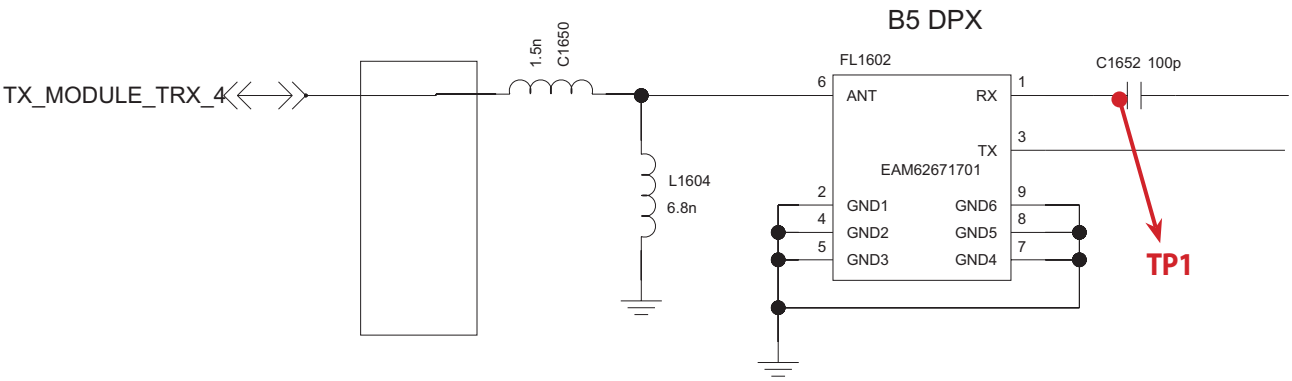

3.1.3 WCDMA_B8 Rx

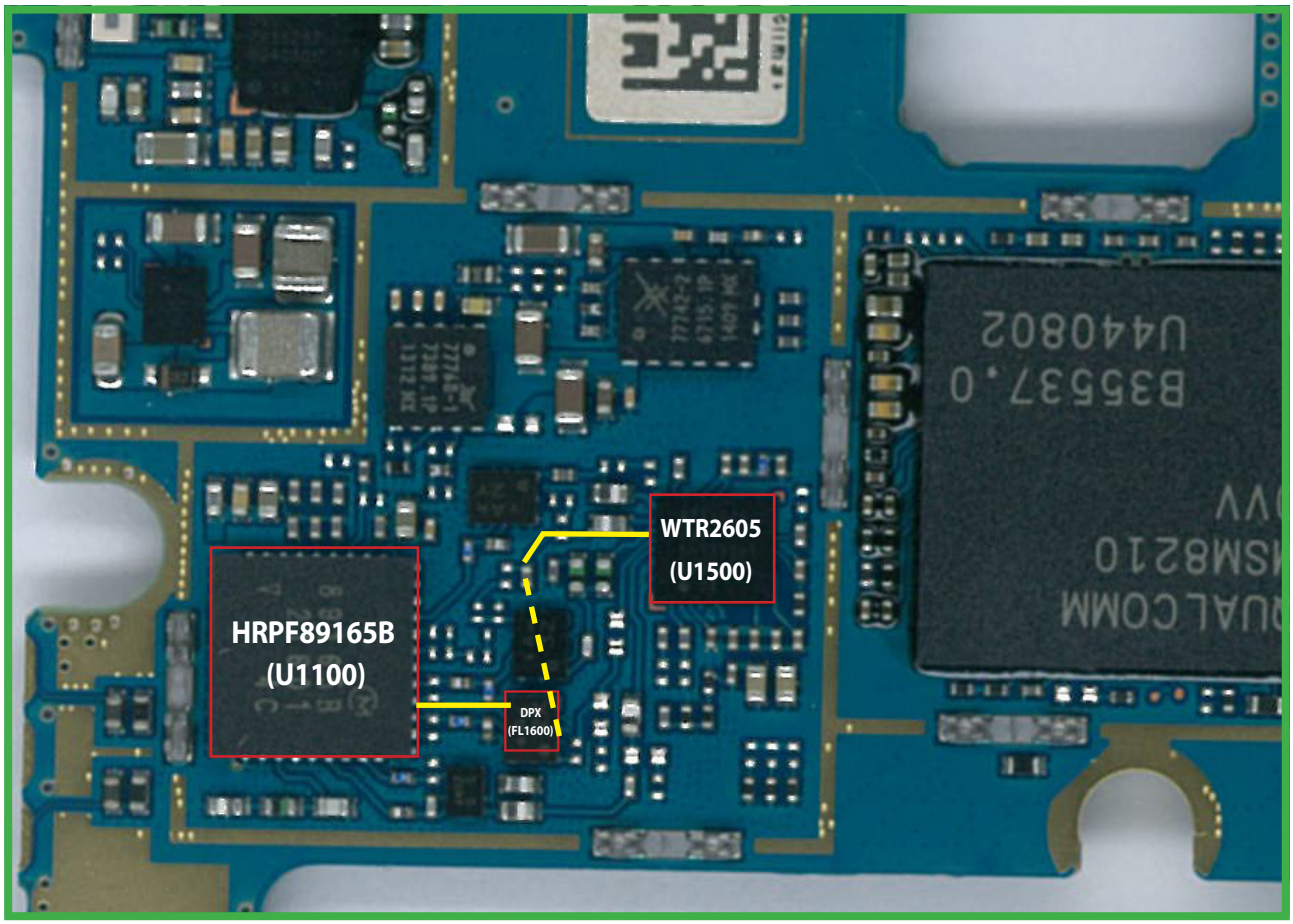

<Main Top>

3.1.3.1 Checking DC Power supply circuit

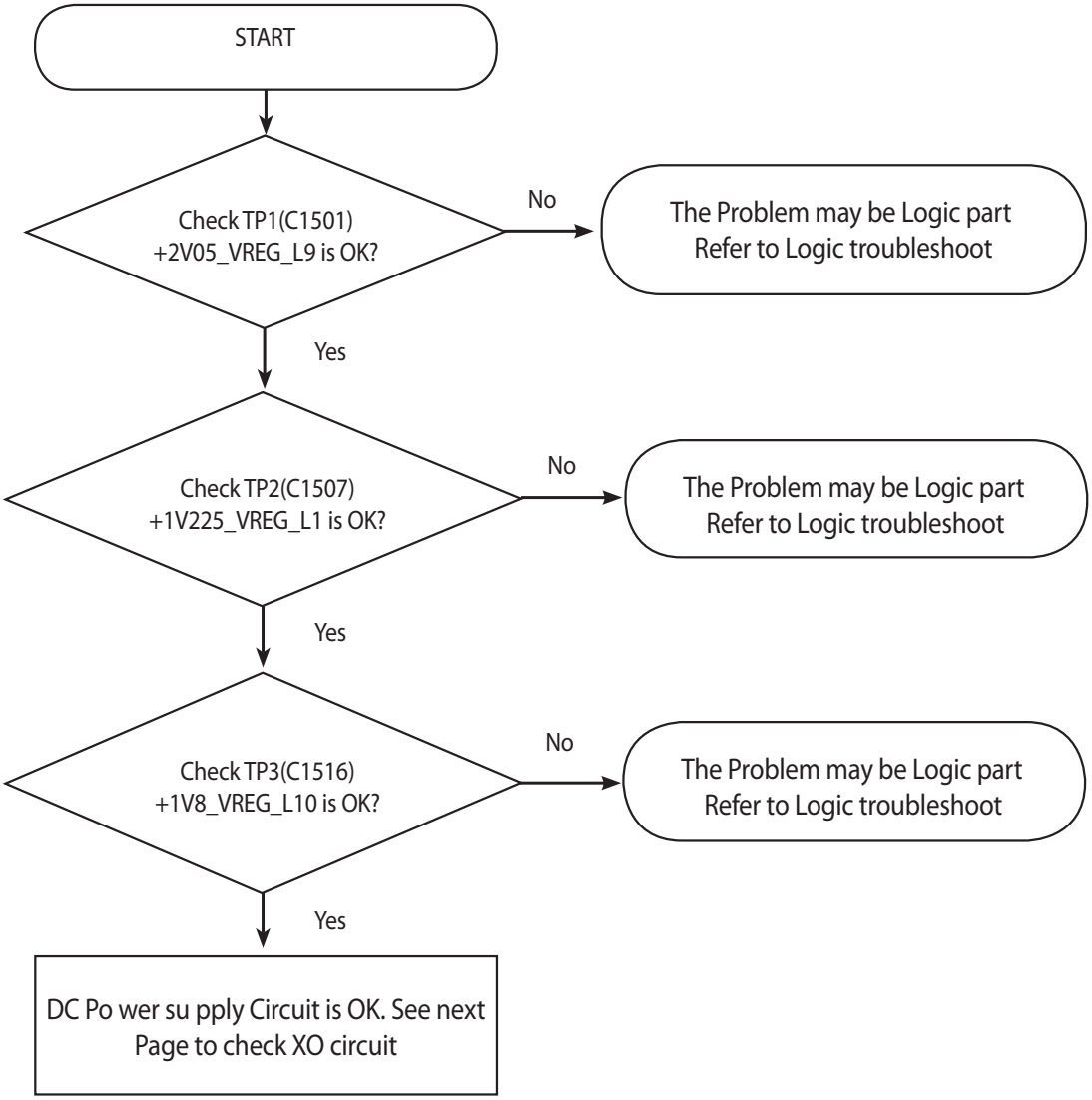

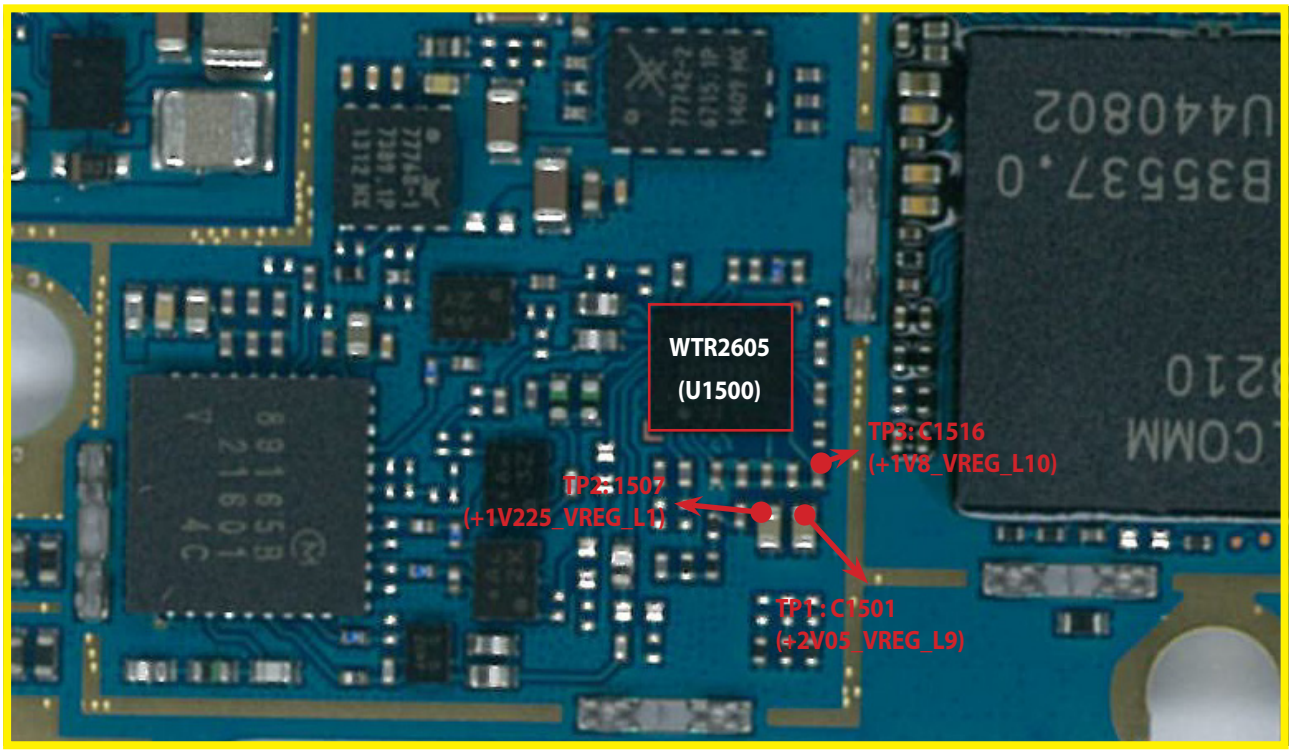

<Main Top>

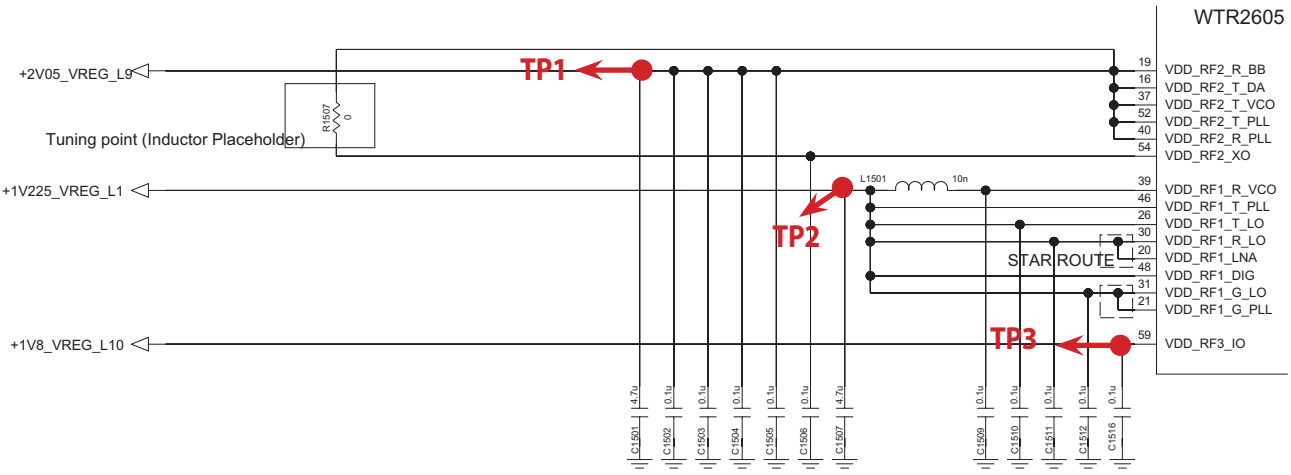

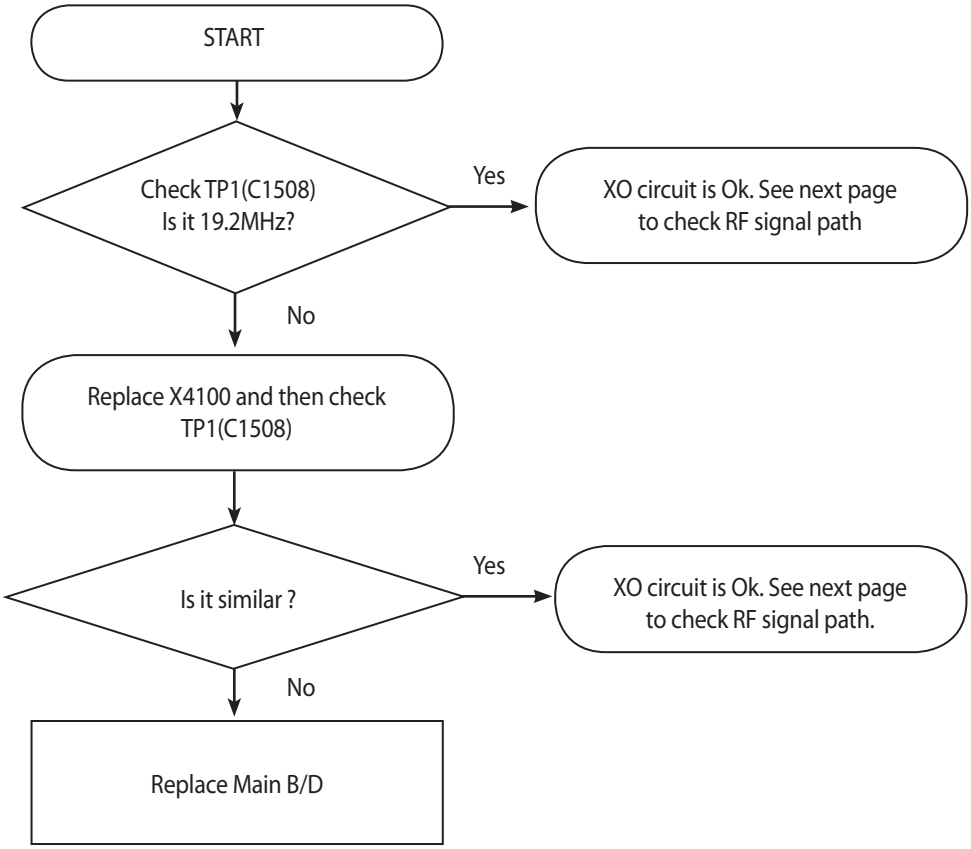

3.1.3.2 Checking WTR2605 XO circuit

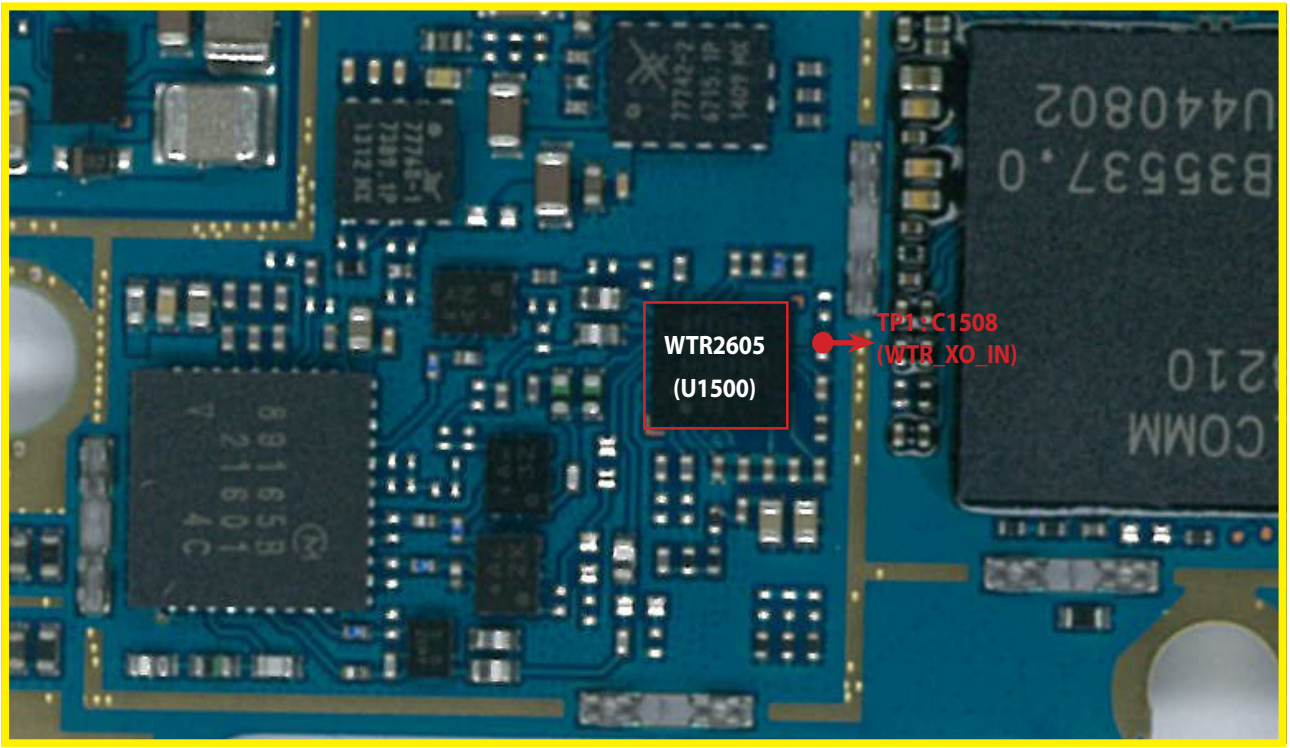

<Main Top>

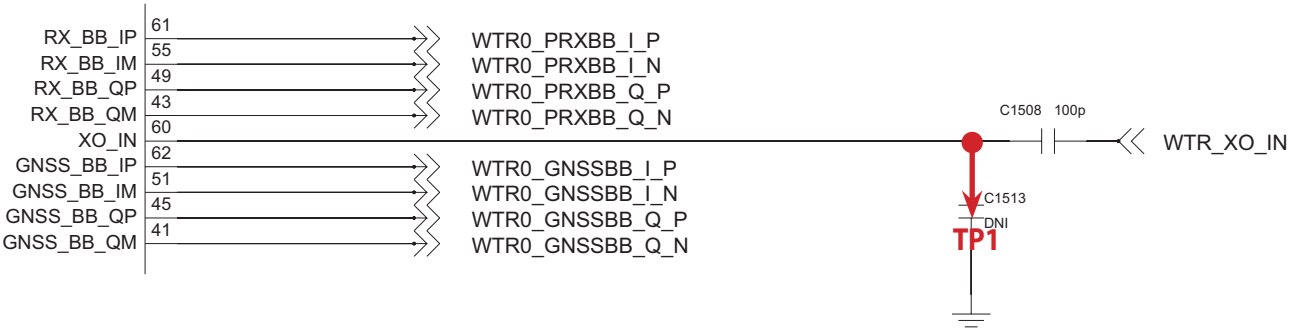

3.1.3.3 Checking RF signal path (Tx Module)

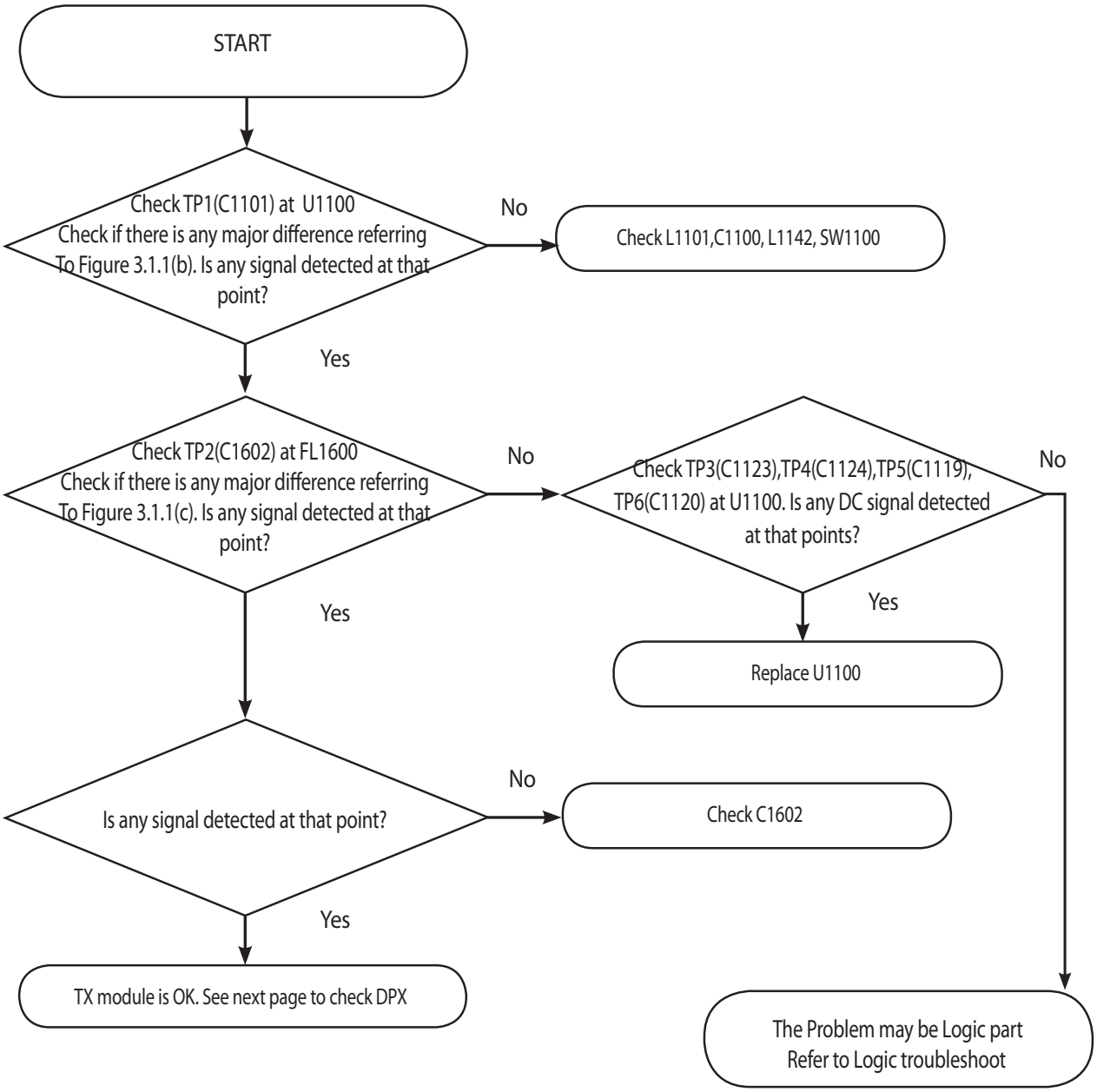

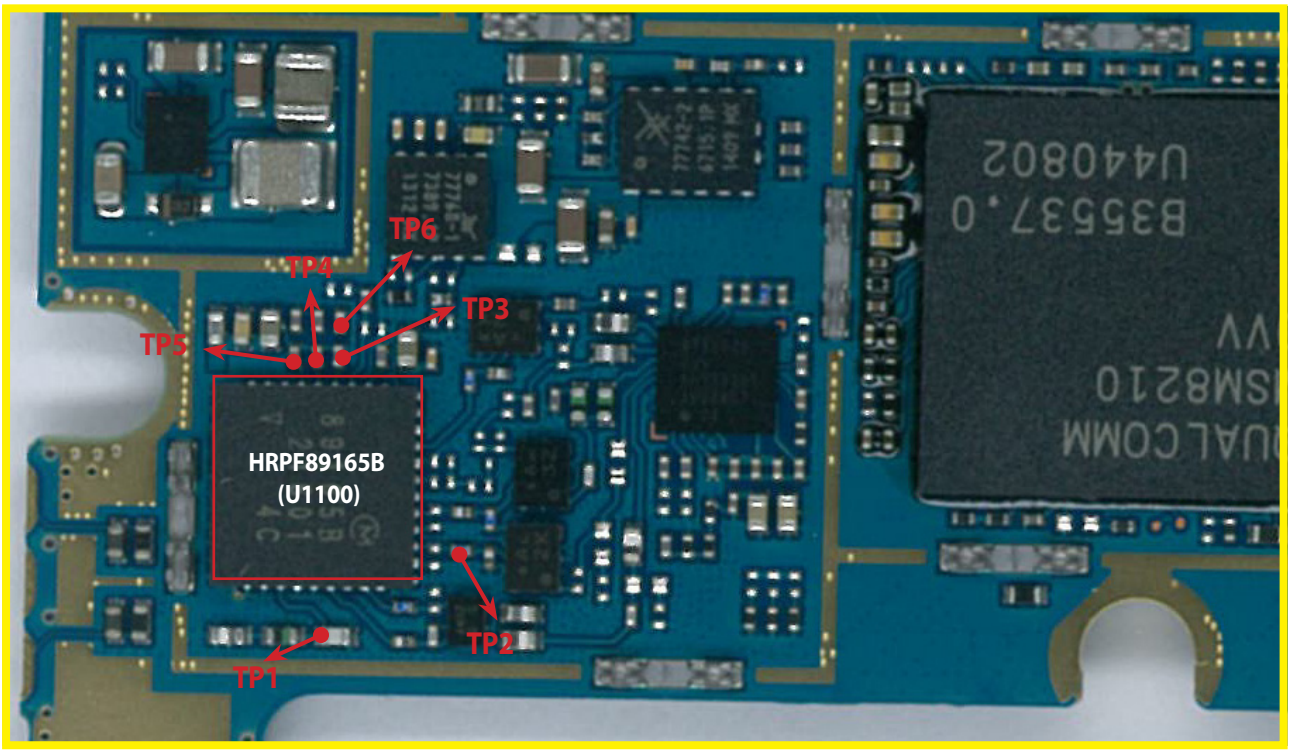

<Main Top>

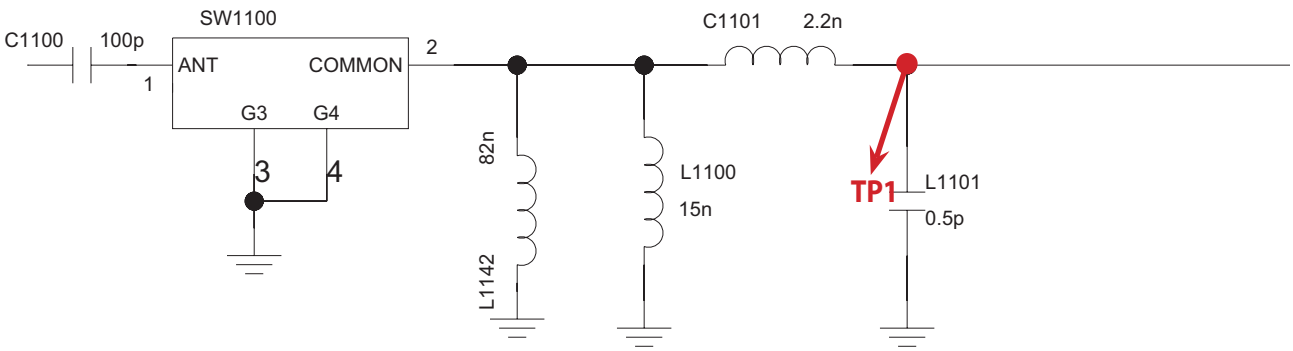

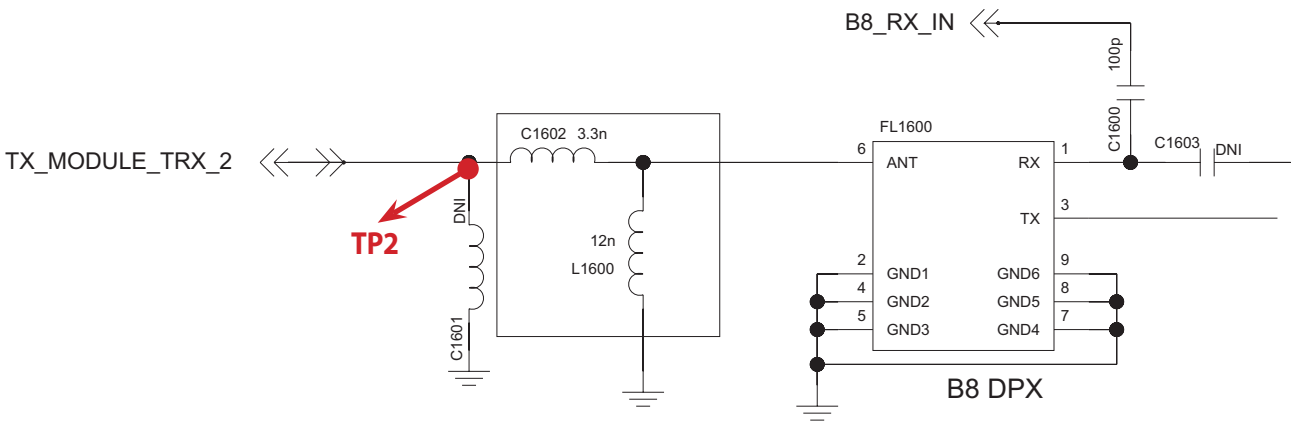

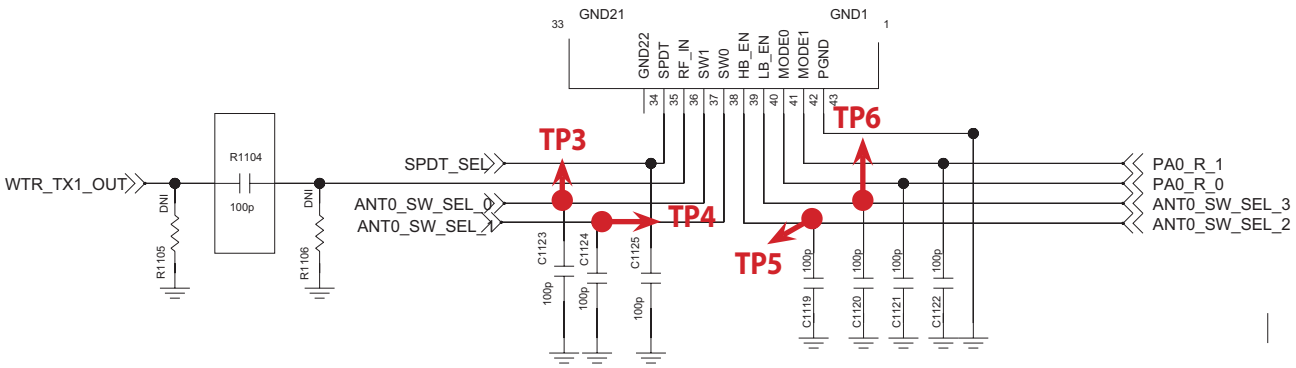

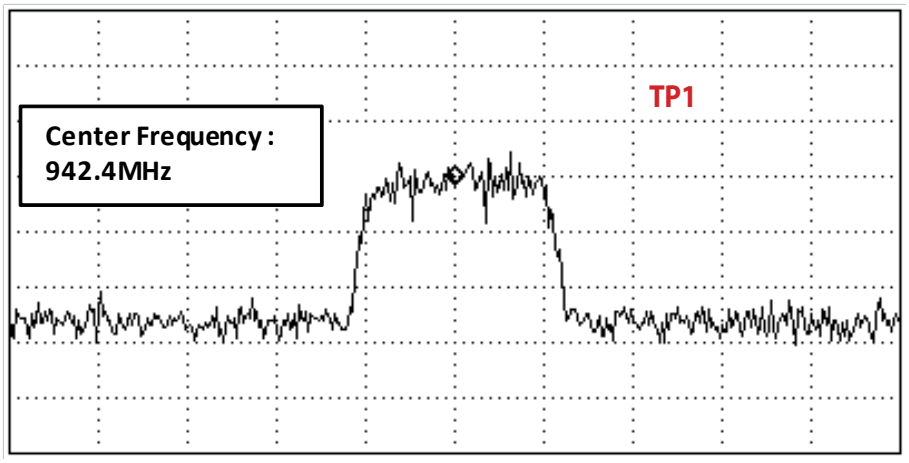

Figure 3.1.1 (b)

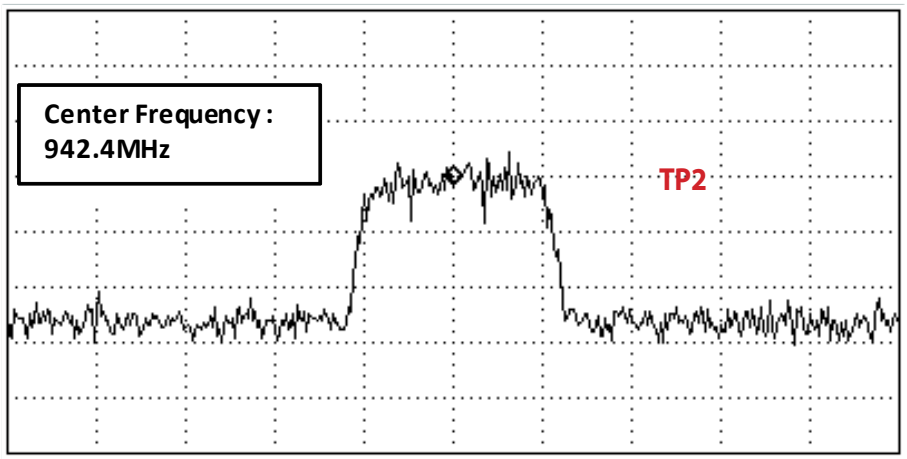

Figure 3.1.1 (c)

3.1.3.4 Checking RF signal path (Duplexer)

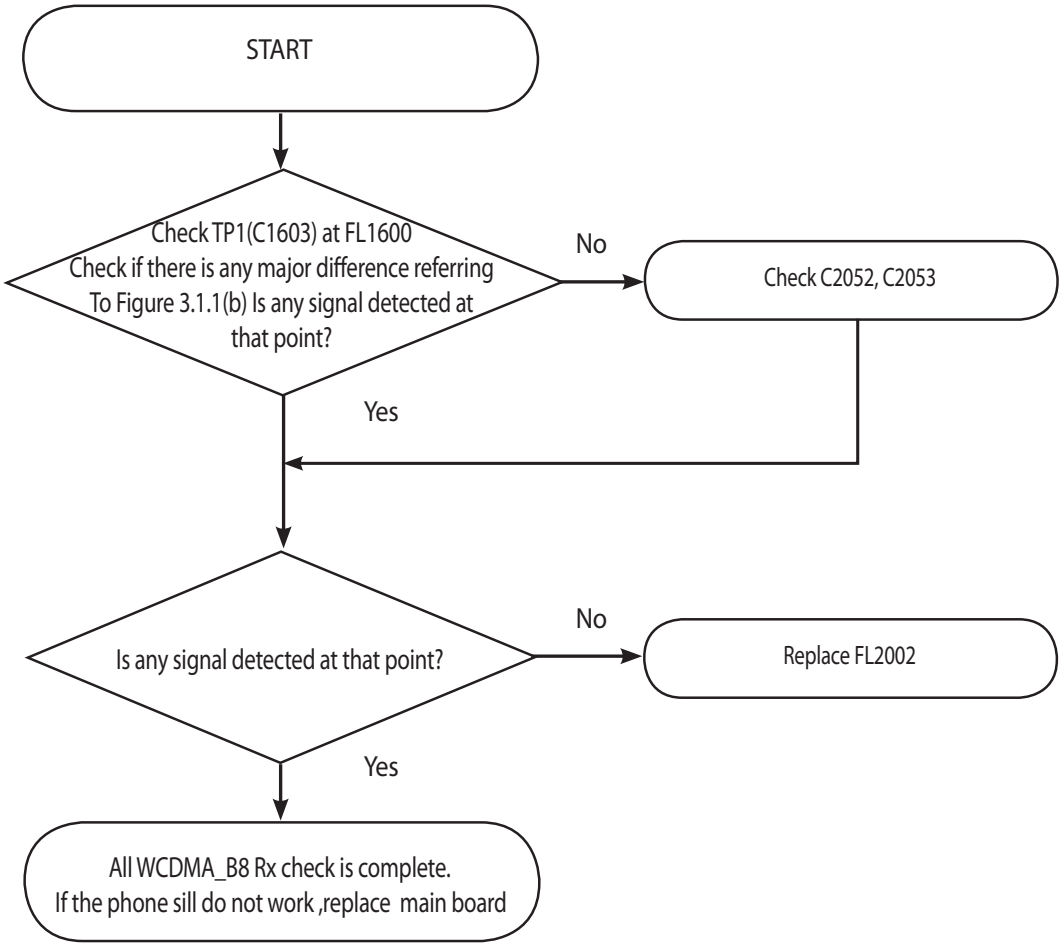

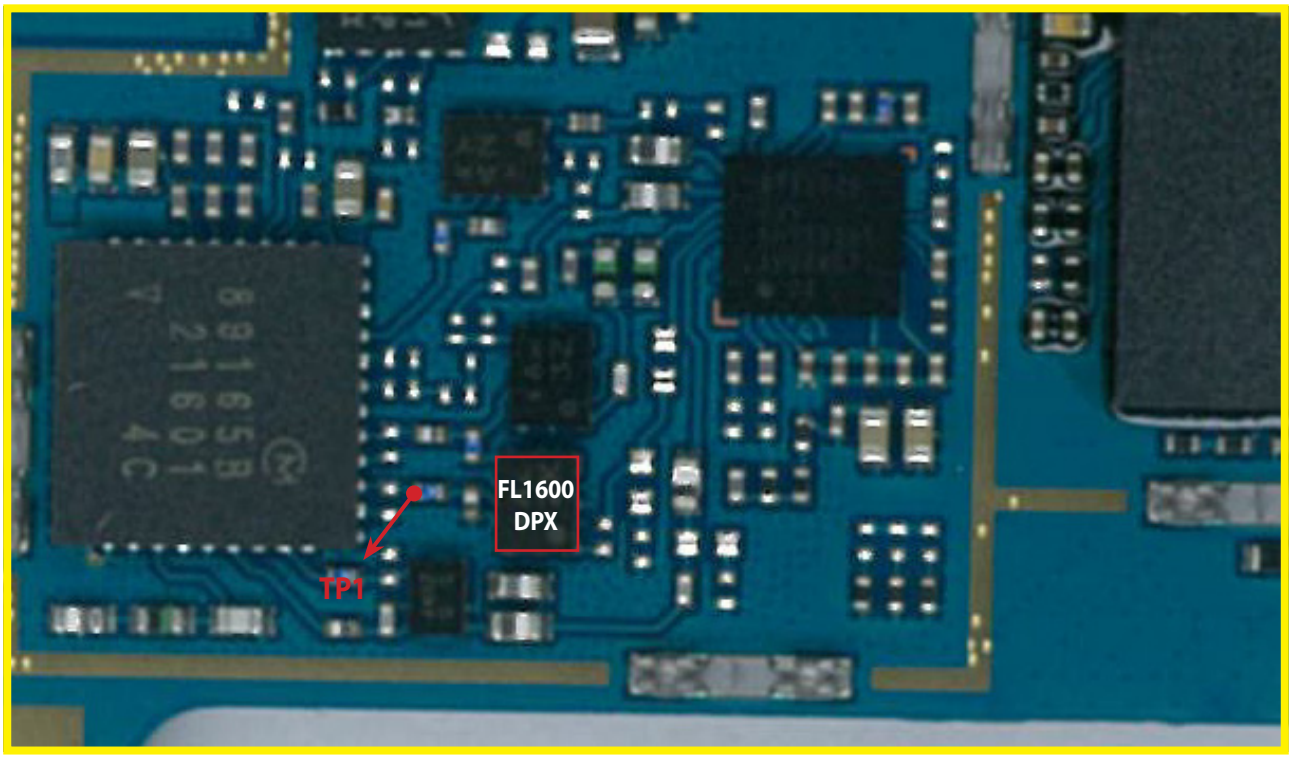

<Main Top>

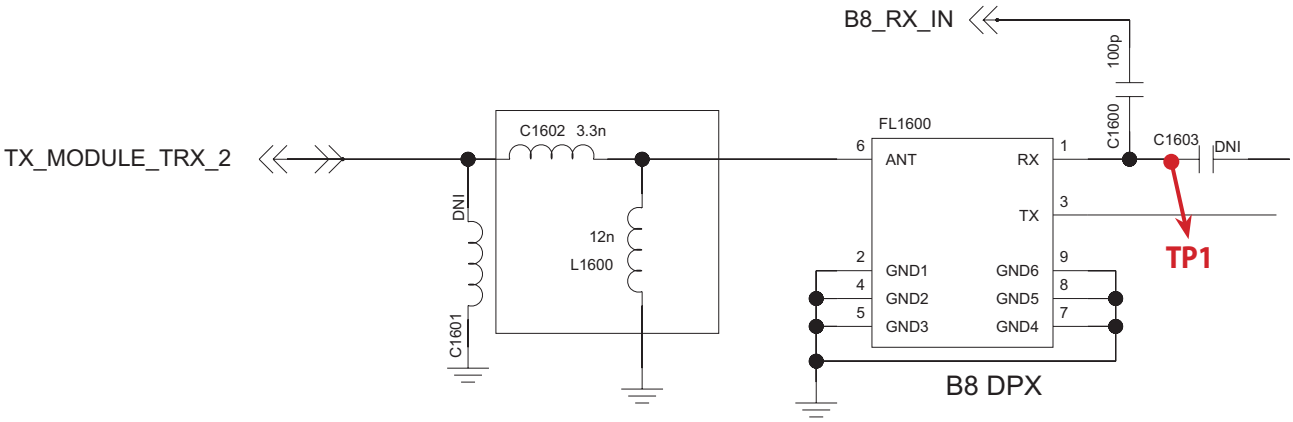

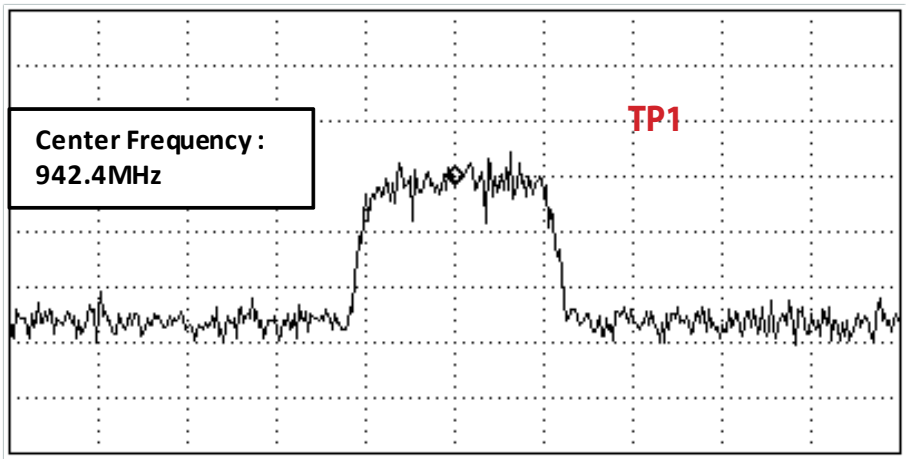

Figure 3.1.1 (b)

3.2 WCDMA Tx Part Trouble

3.2.1 WCDMA_B1 Tx

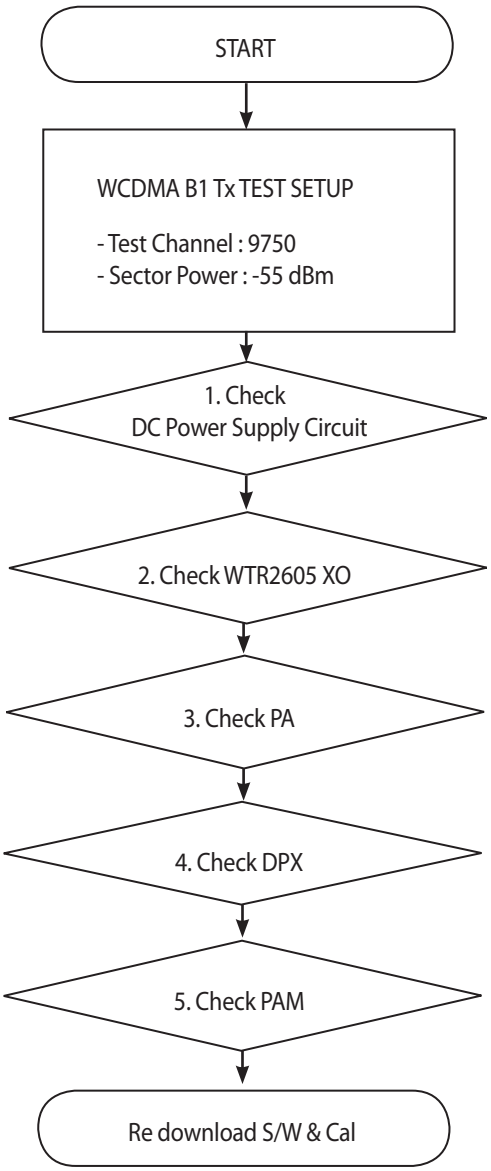

* There are no Test Points on the IQ Data Line. So It is impossible to check the IQ Data Wave form

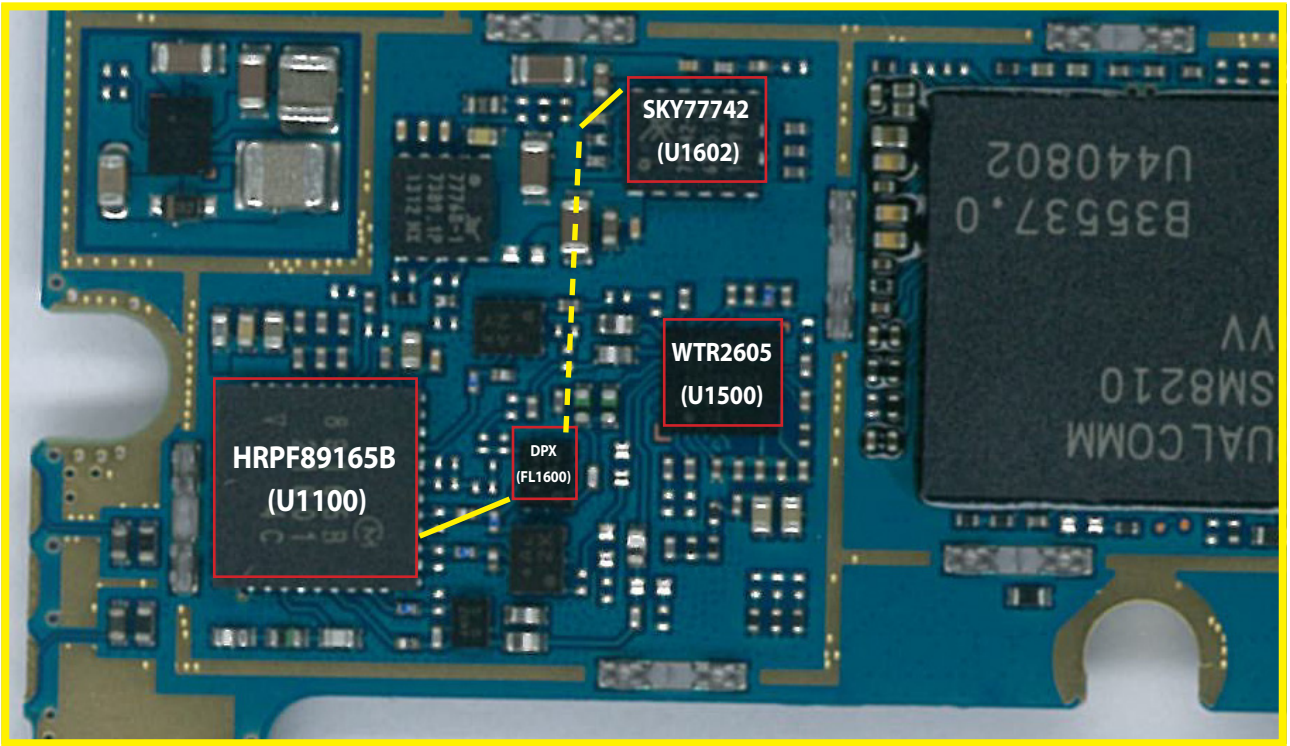

<Main Top>

3.2.1.1 Checking DC Power supply circuit

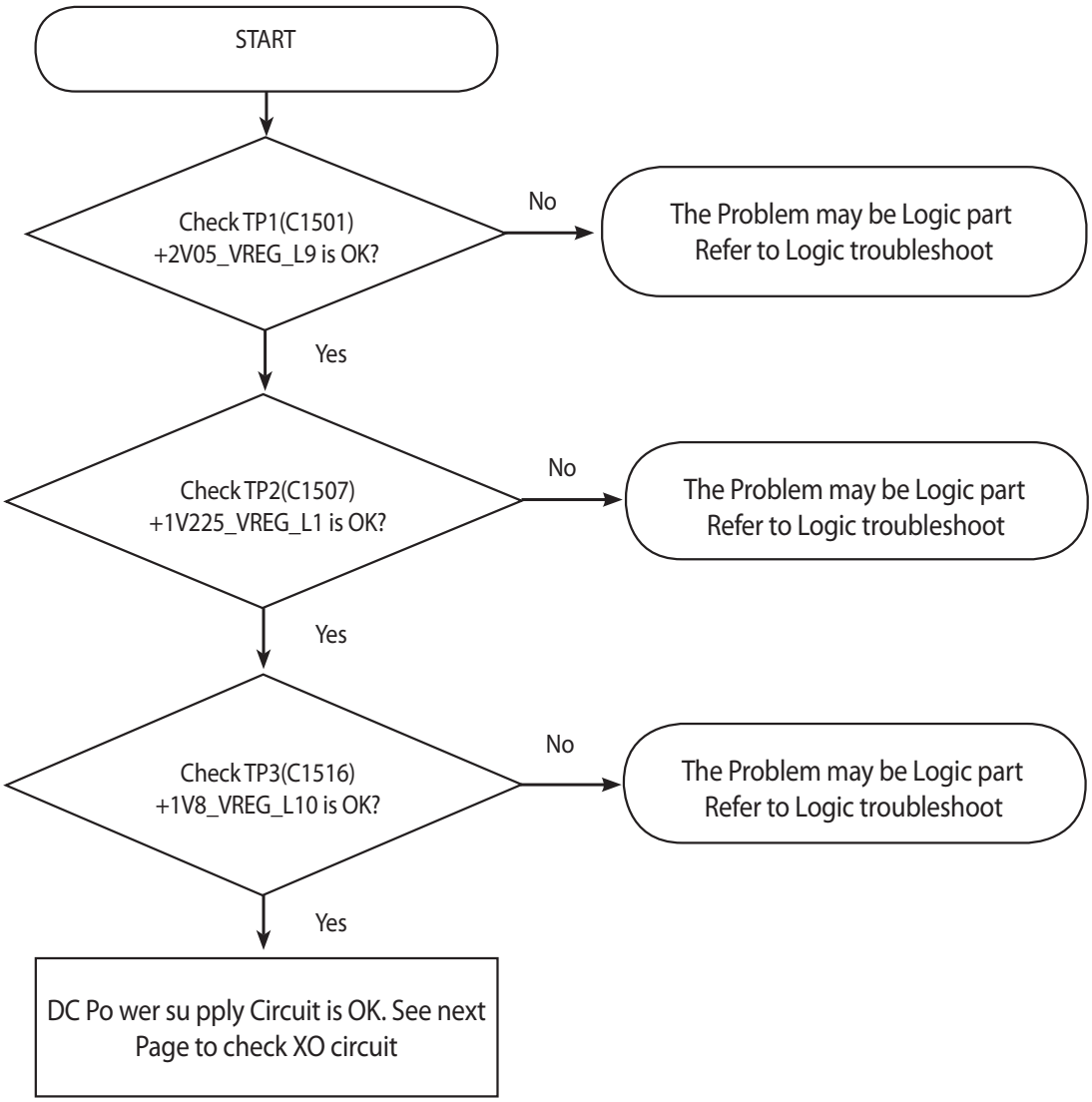

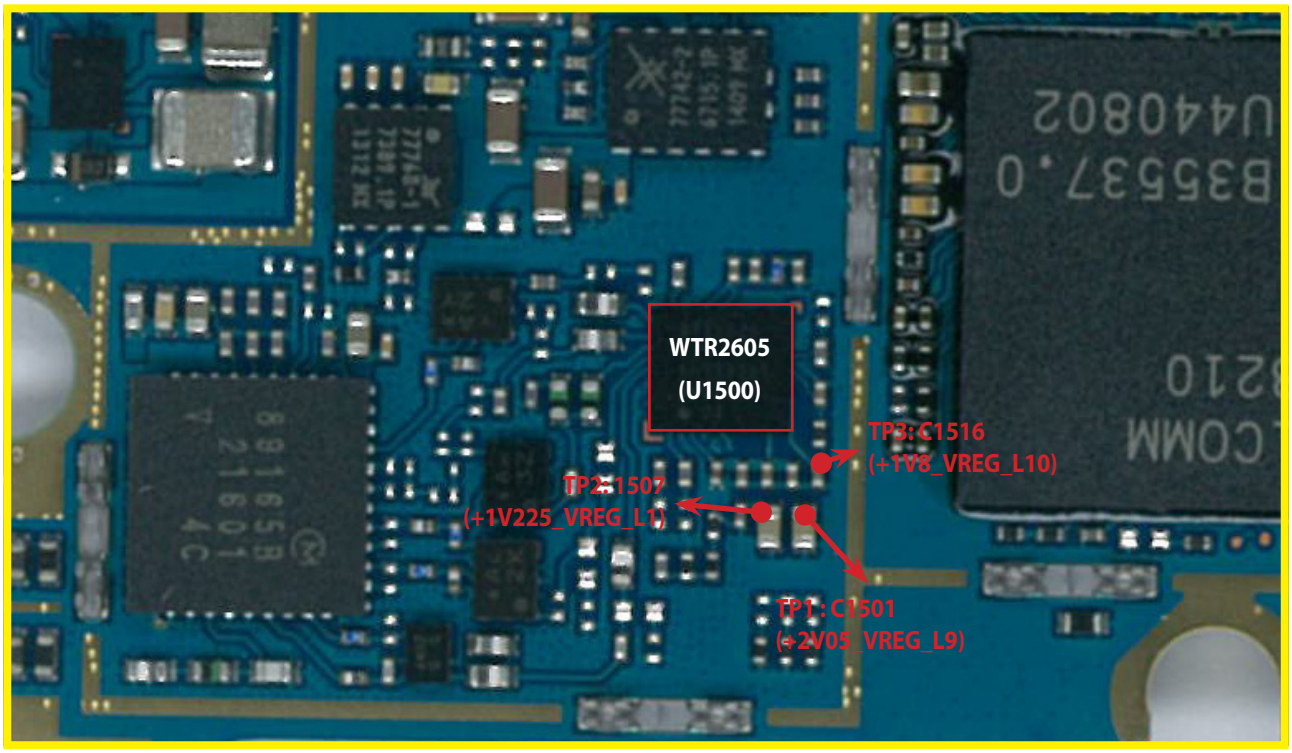

<Main Top>

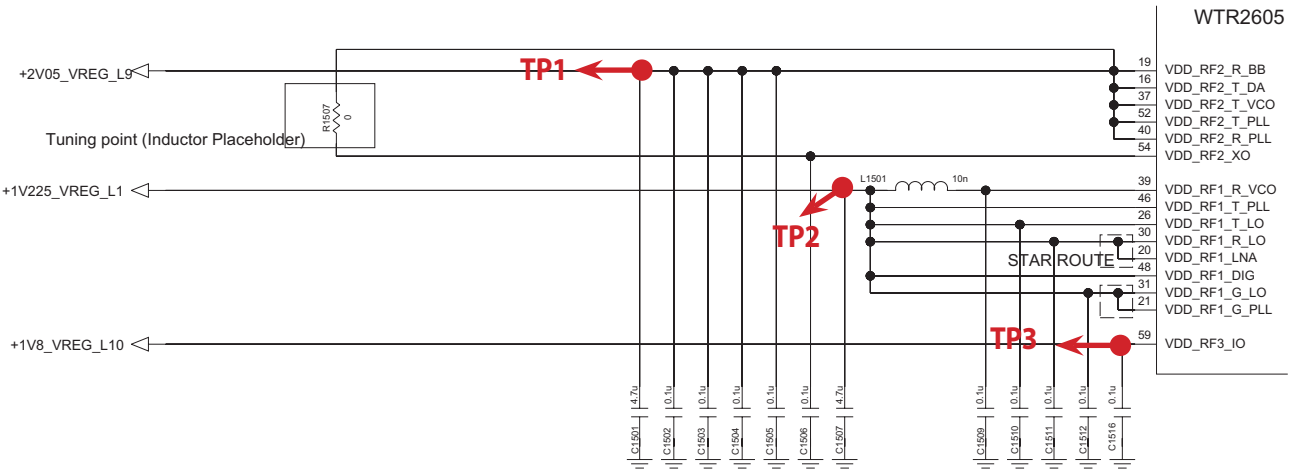

3.2.1.2 Checking WTR6205 XO circuit

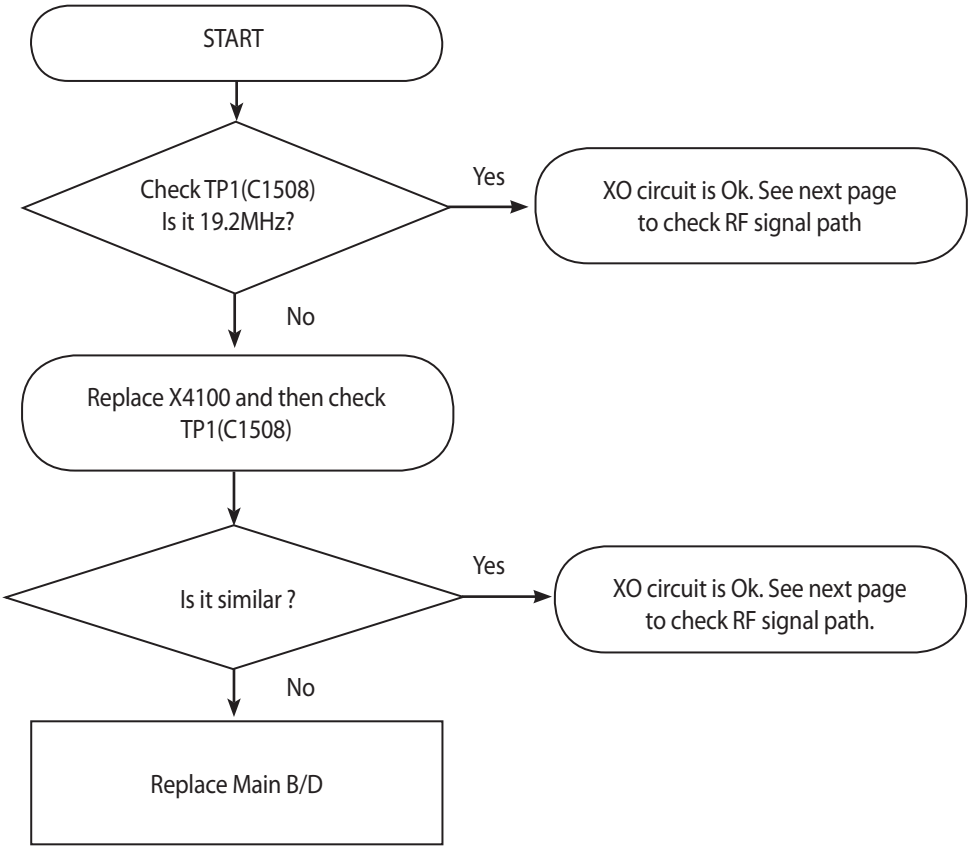

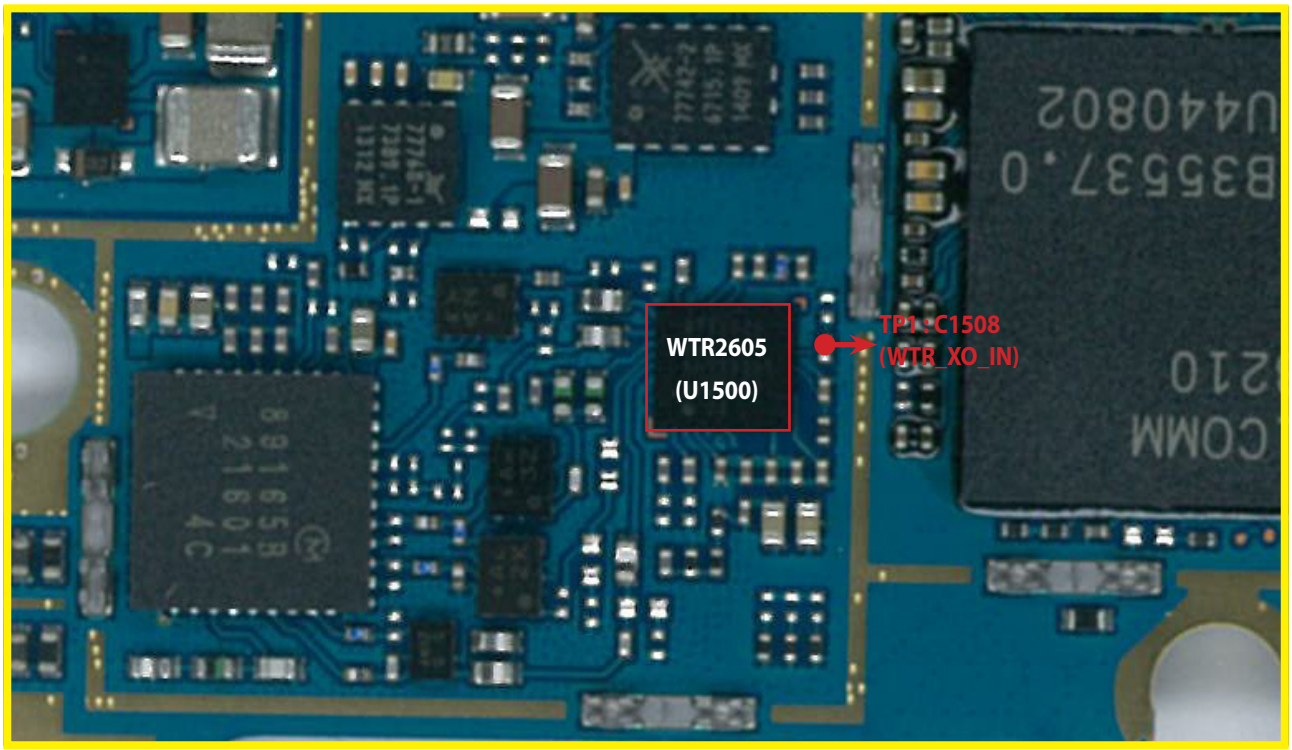

<Main Top>

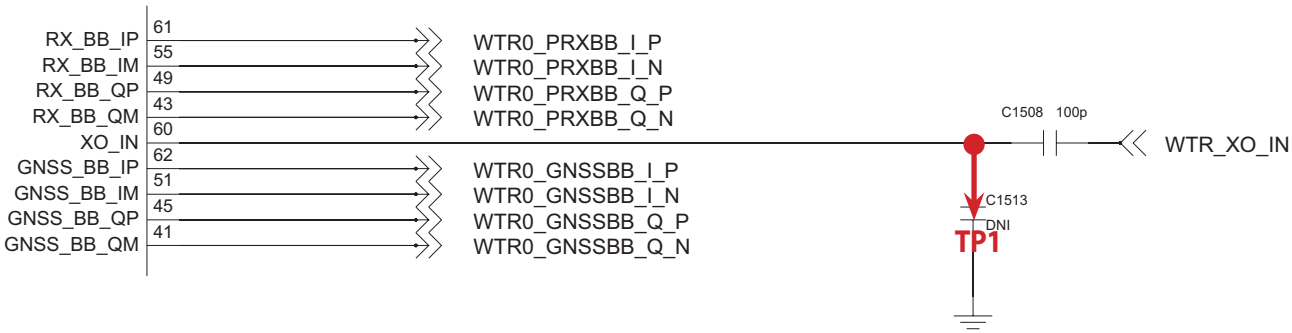

3.2.1.3 Checking B1 TX PA

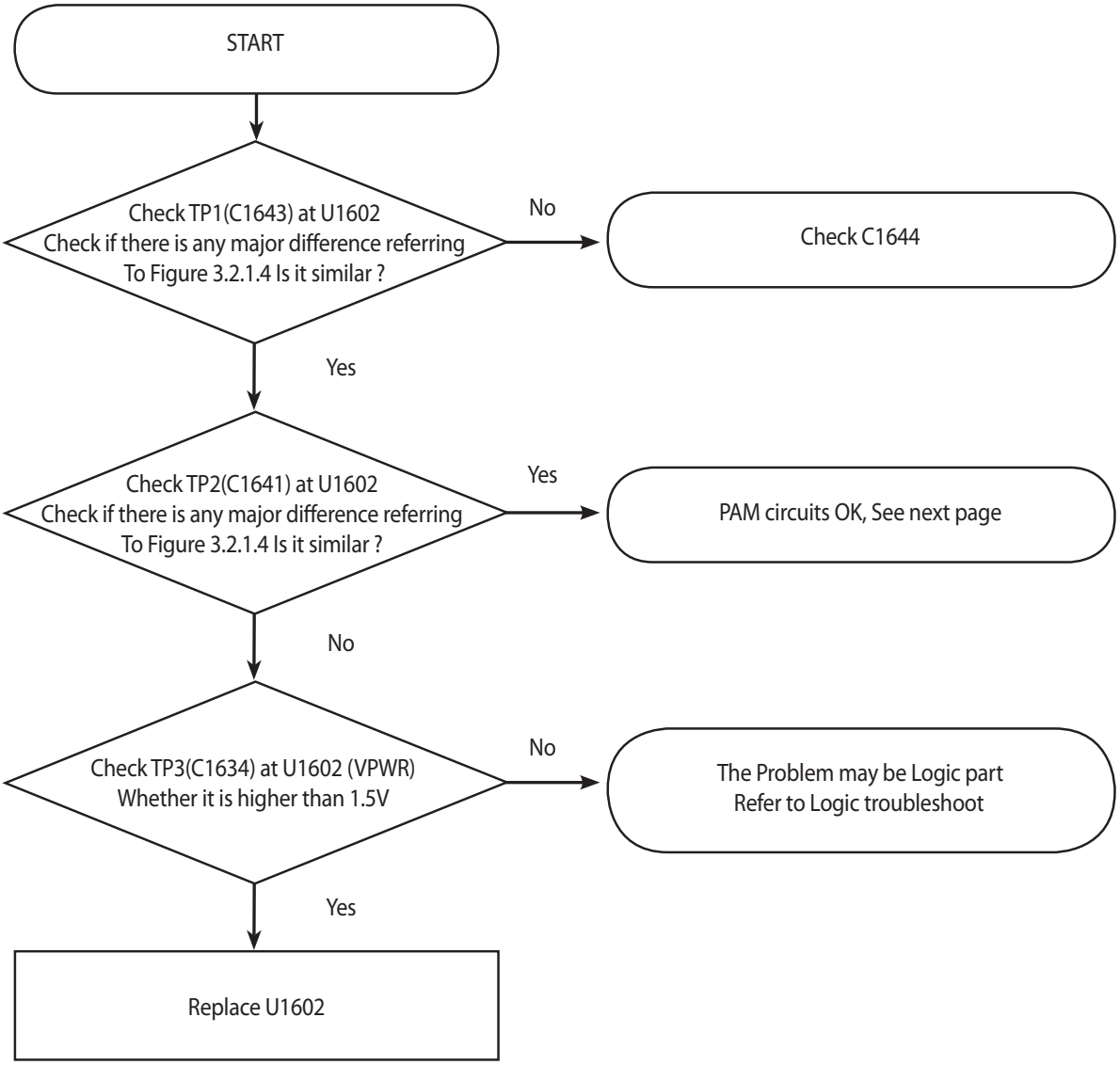

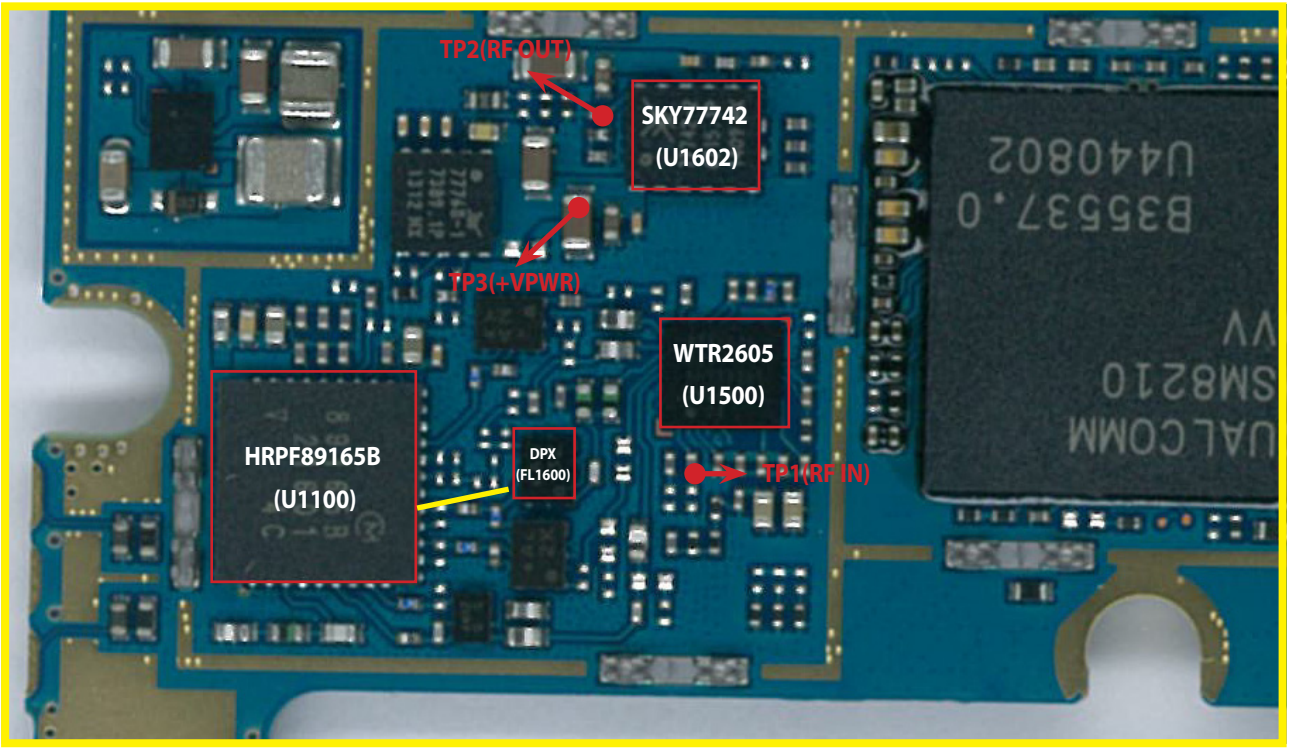

<Main Top>

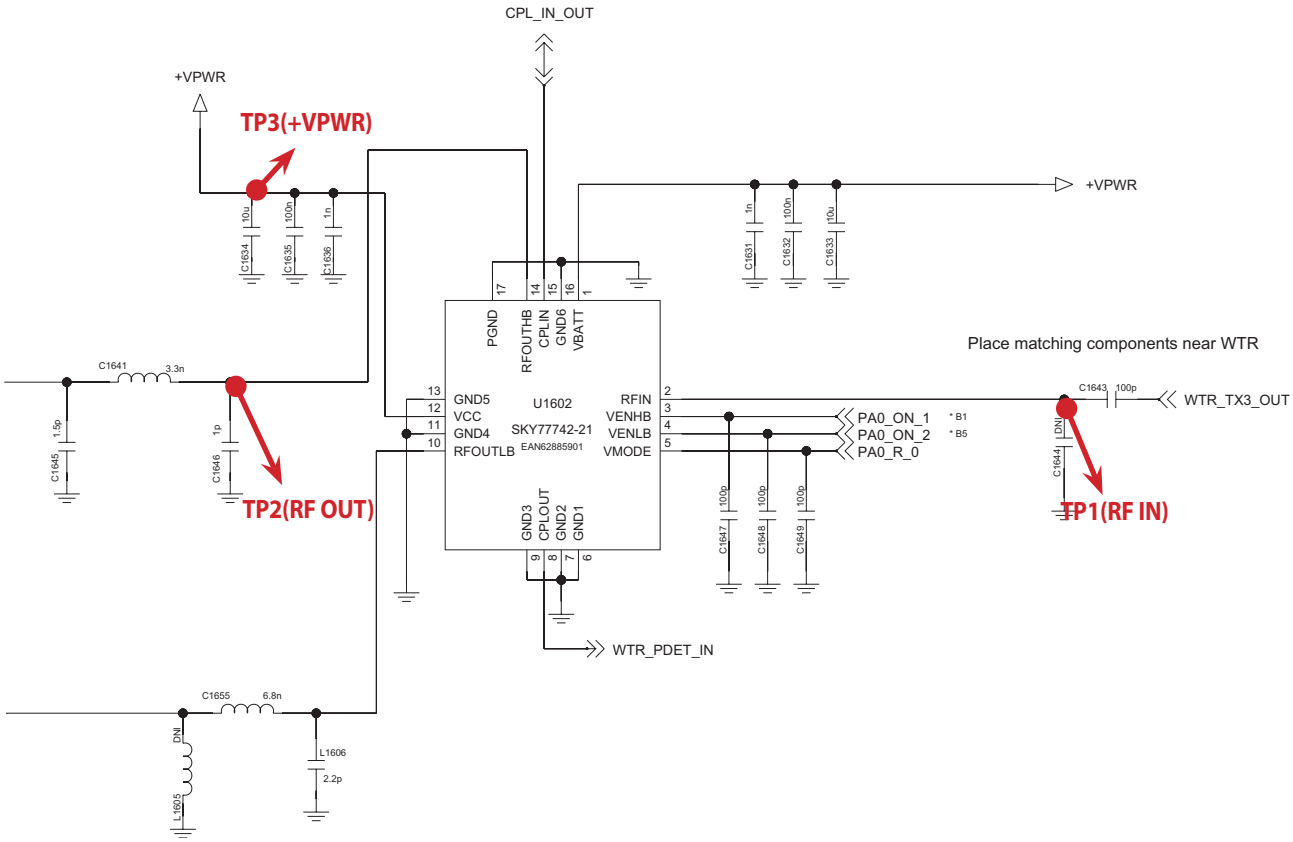

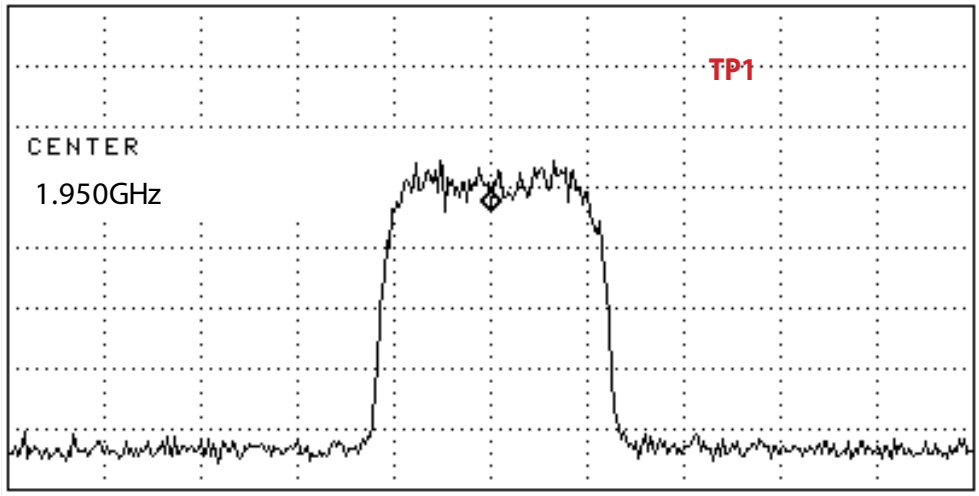

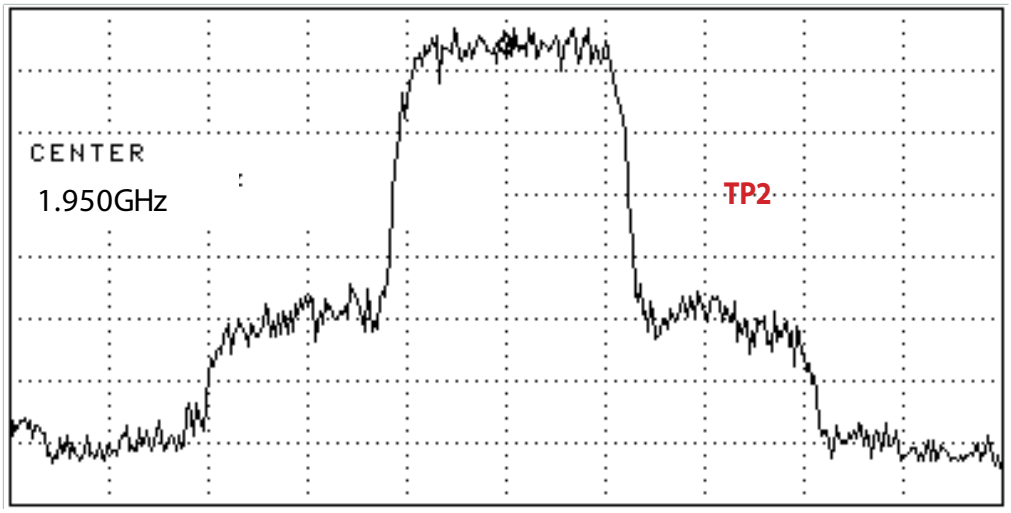

Figure 3.2.1.4

3.2.1.4 Checking RF signal path (DPX)

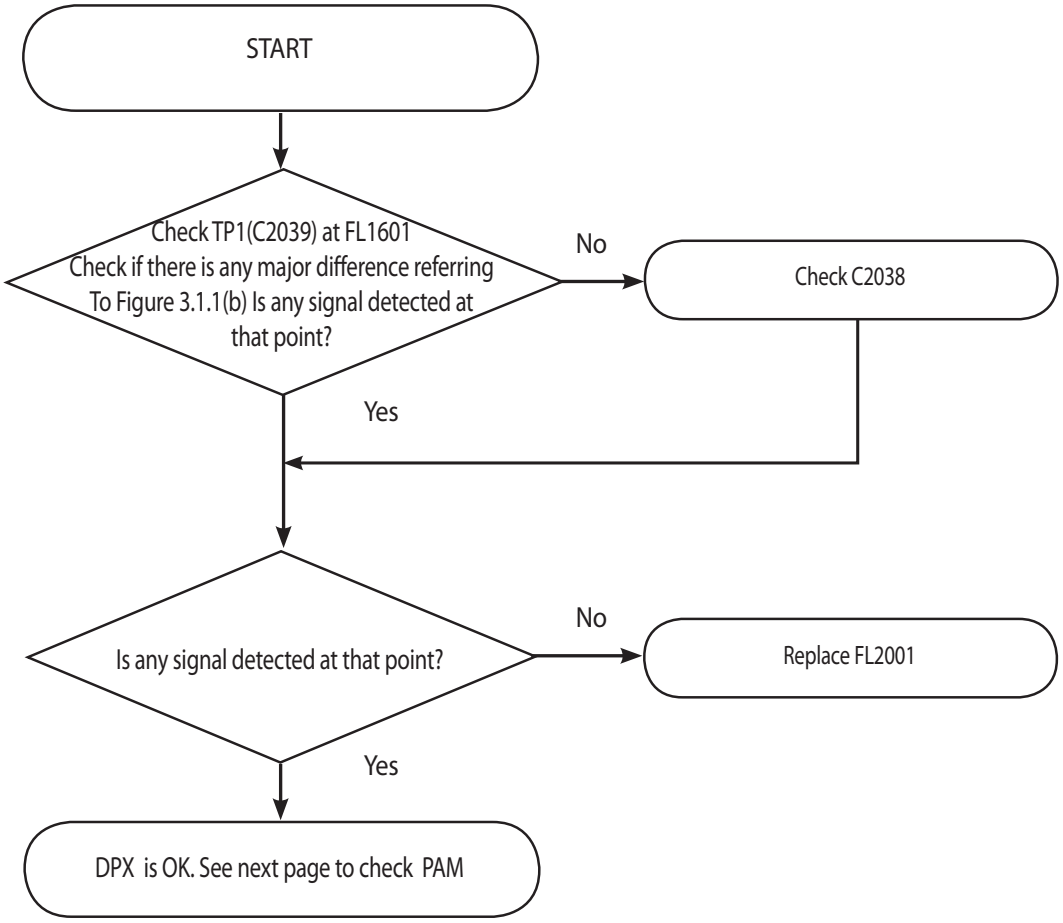

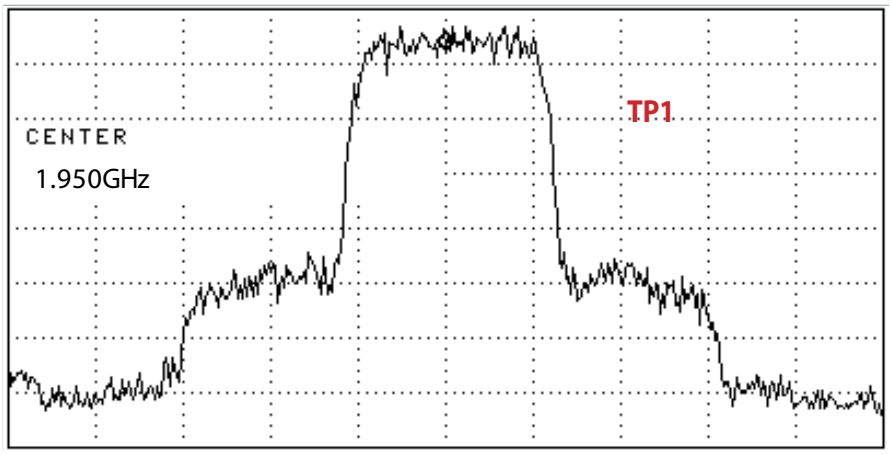

Figure 3.1.1 (b)

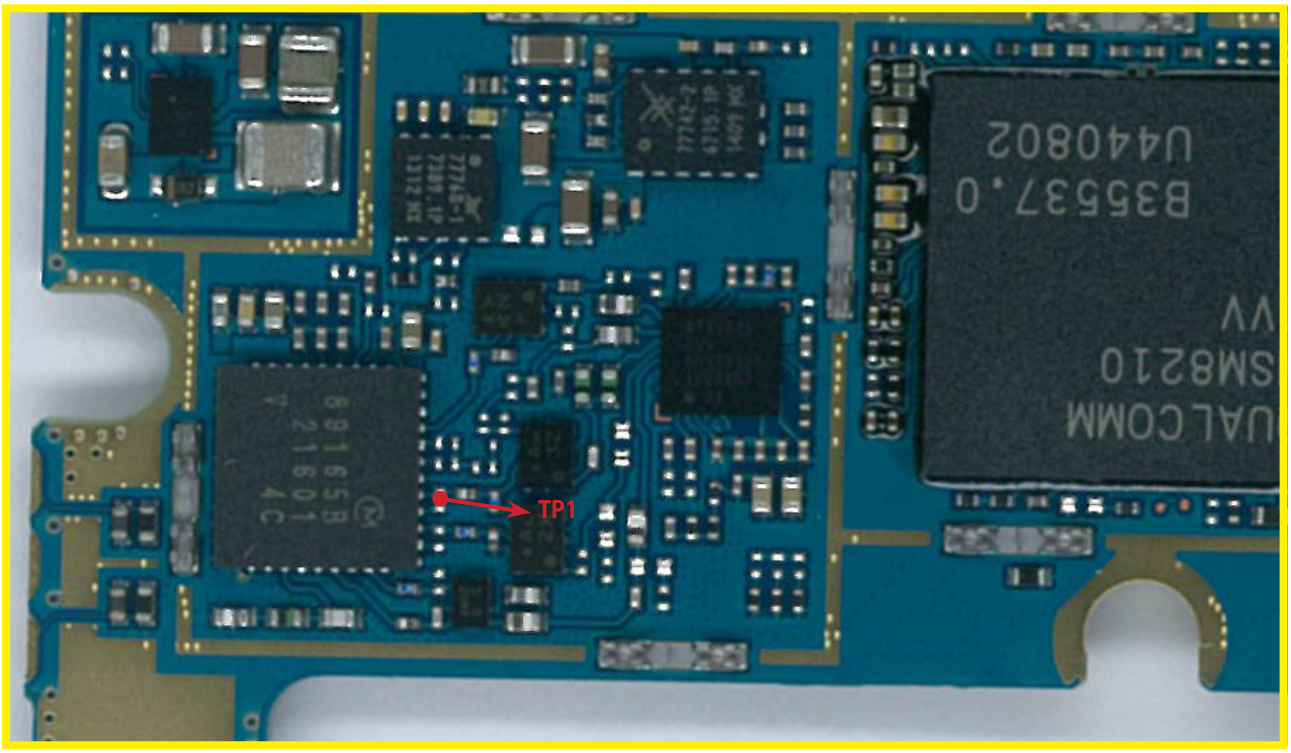

<Main Top>

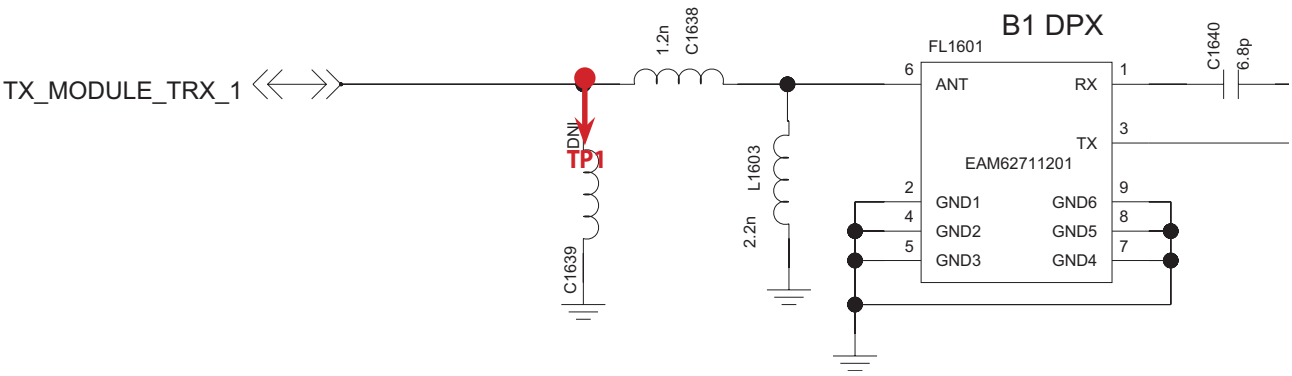

3.2.1.5 Checking RF signal path (Tx Module)

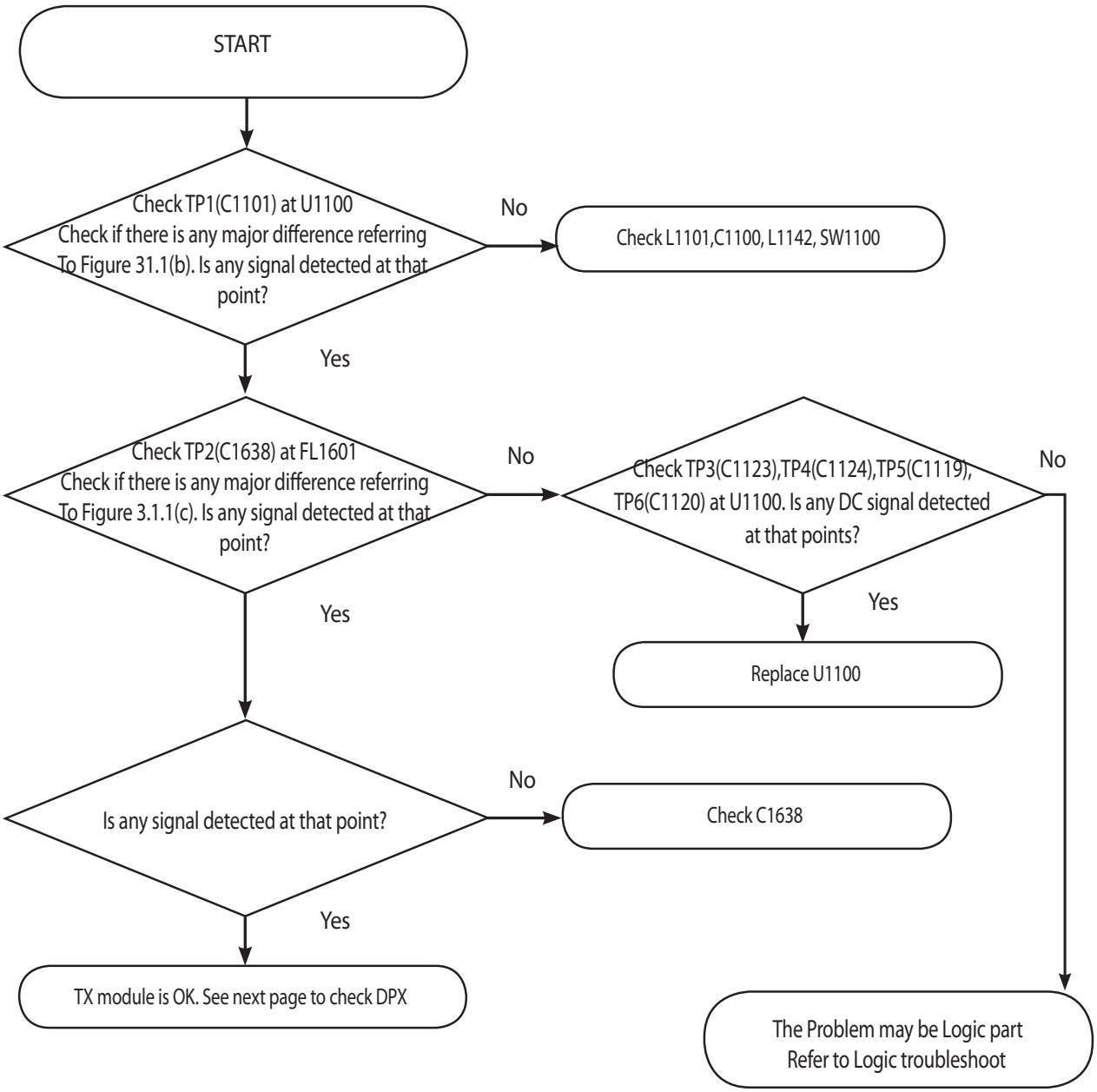

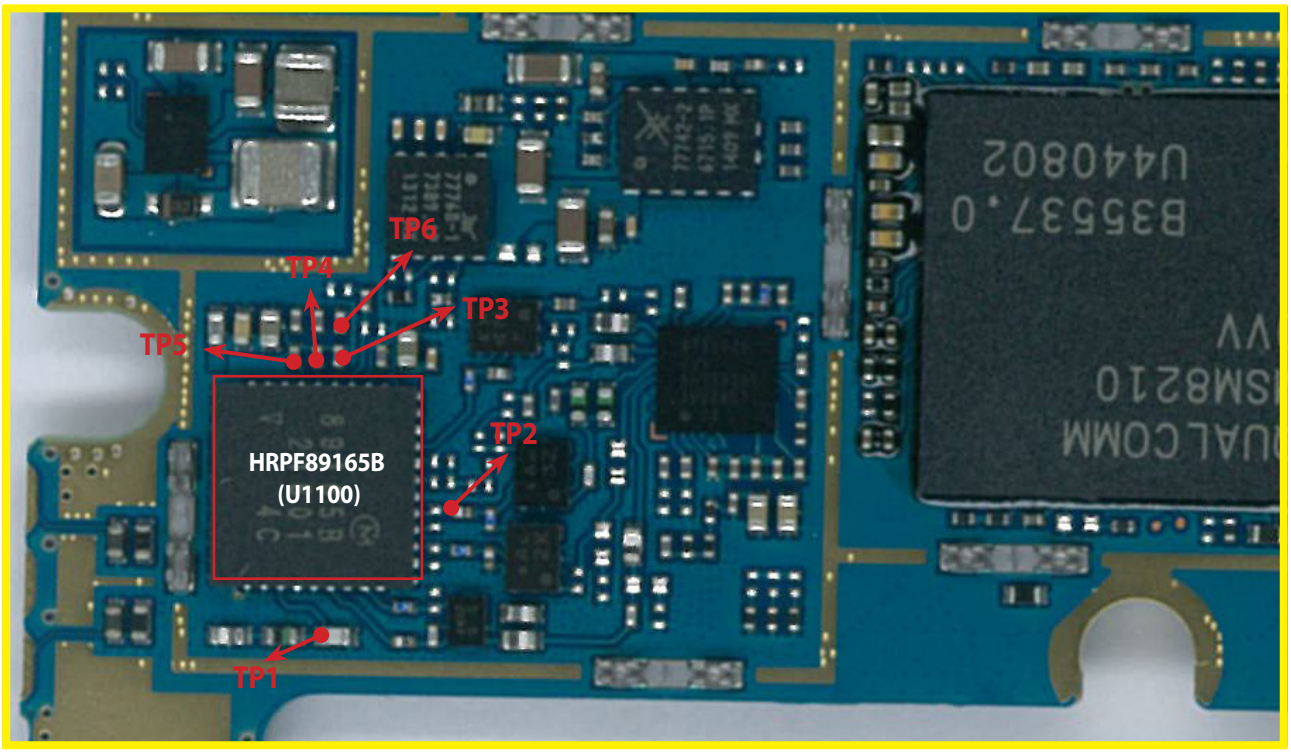

<Main Top>

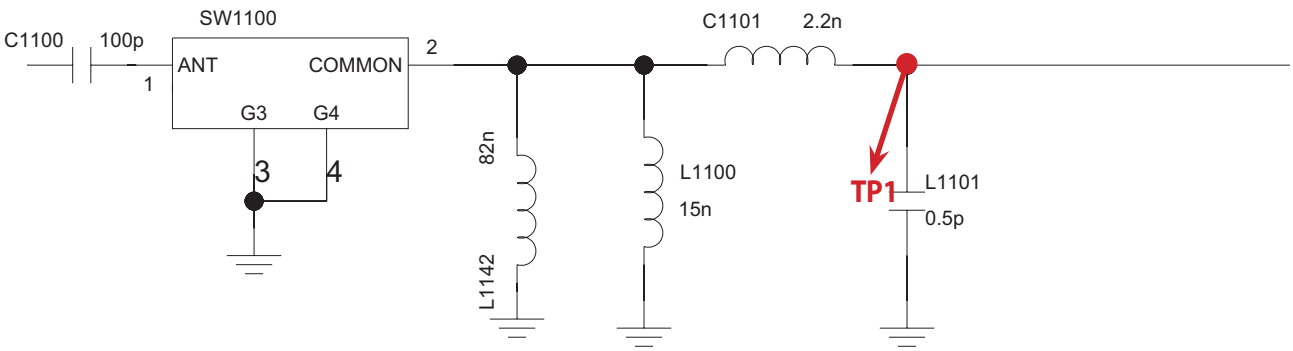

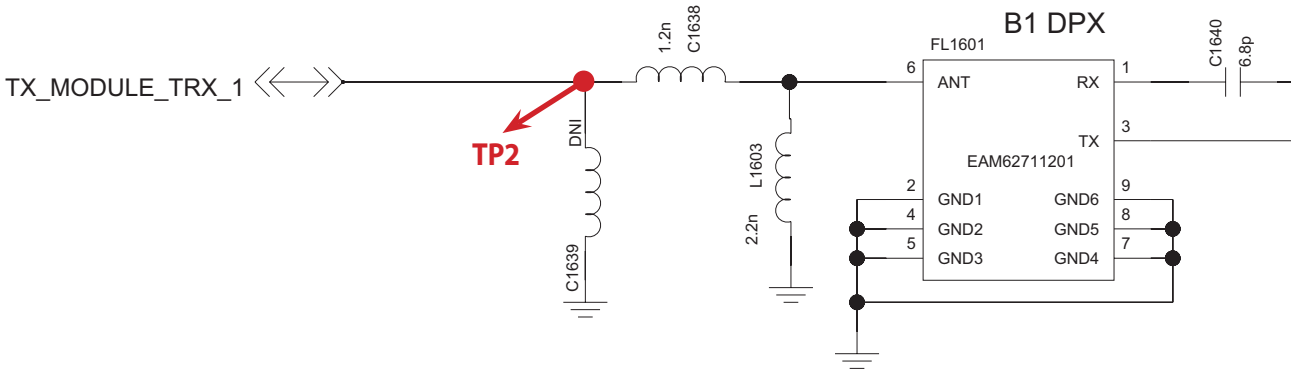

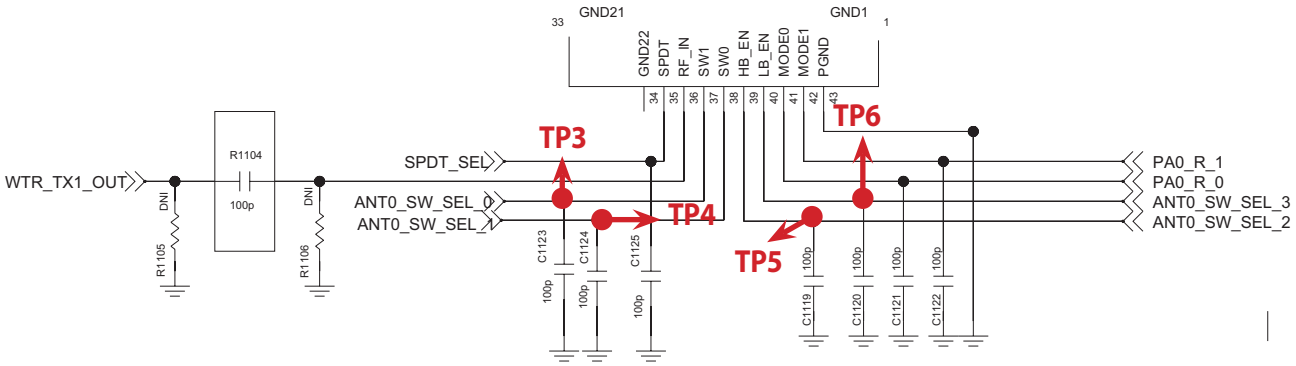

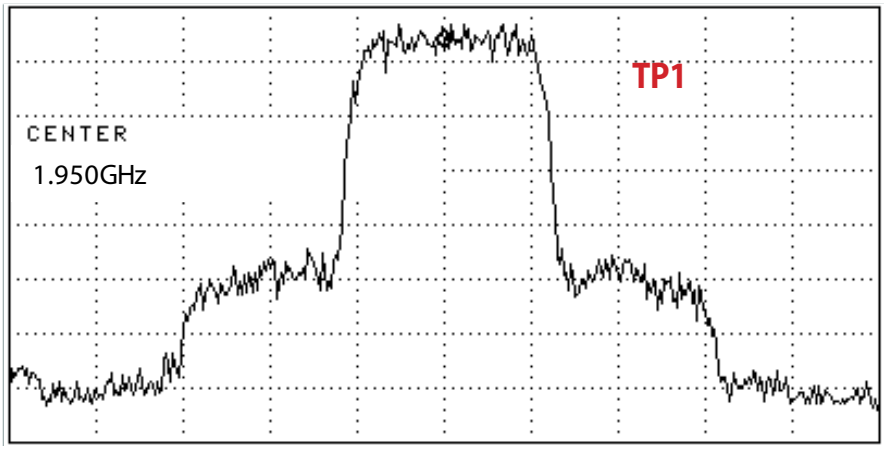

Figure 3.1.1 (b)

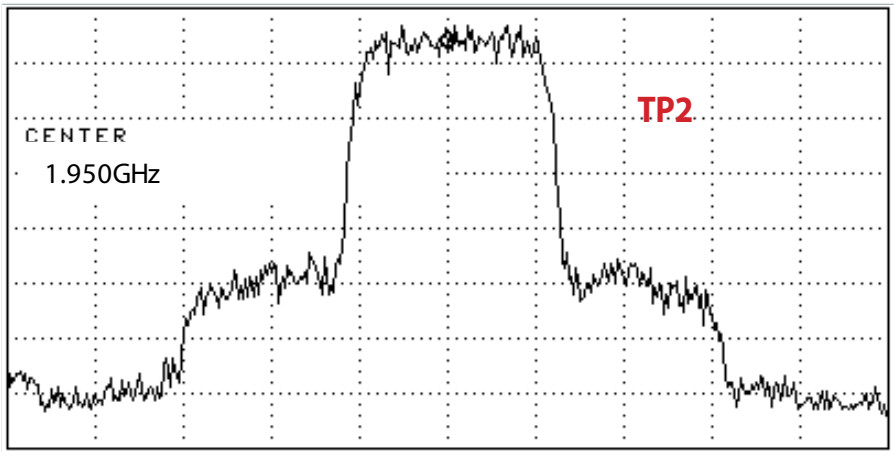

Figure 3.1.1 (c)

3.2.2 WCDMA_B5 Tx

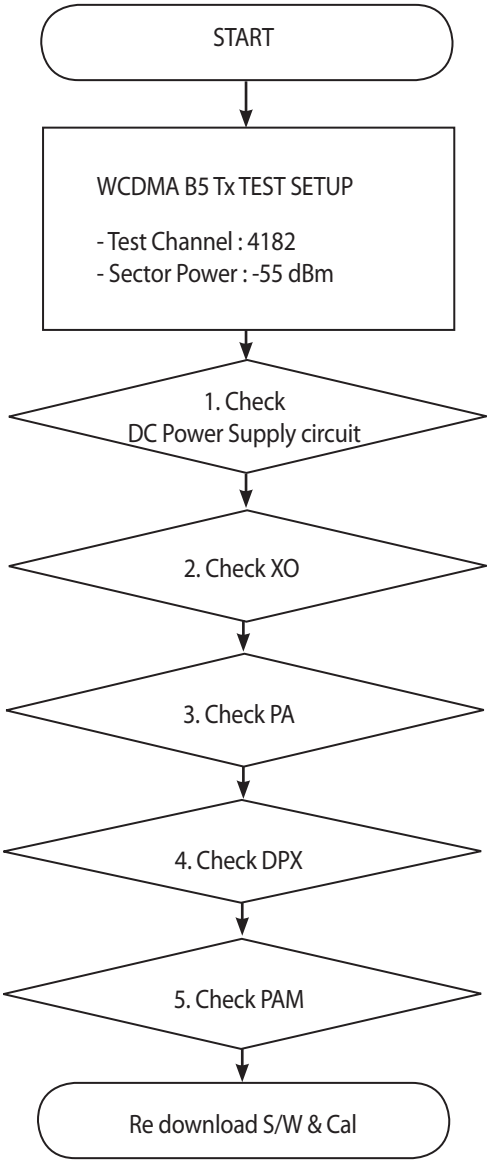

* There are no Test Points on the IQ Data Line. So It is impossible to check the IQ Data Wave form

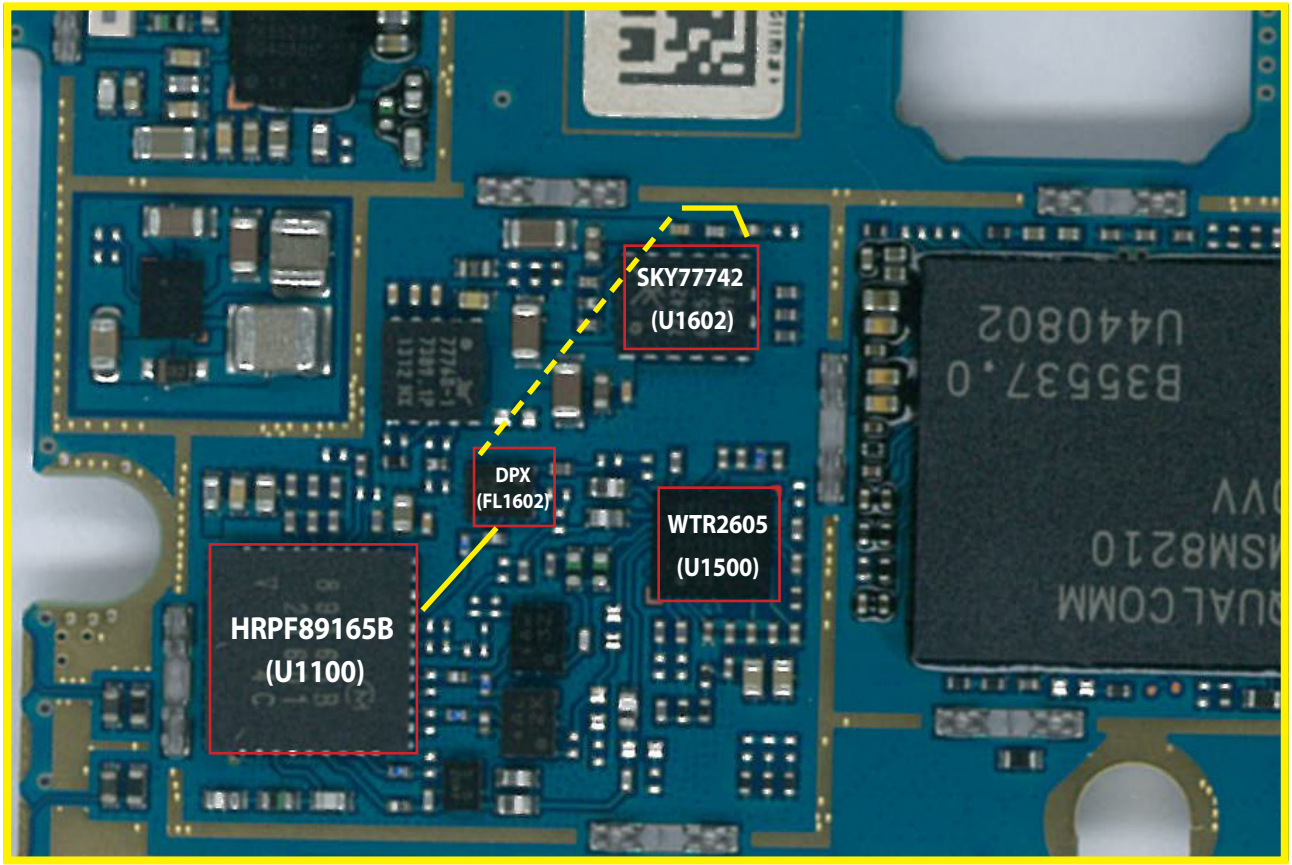

<Main Top>

3.2.2.1 Checking DC Power supply circuit

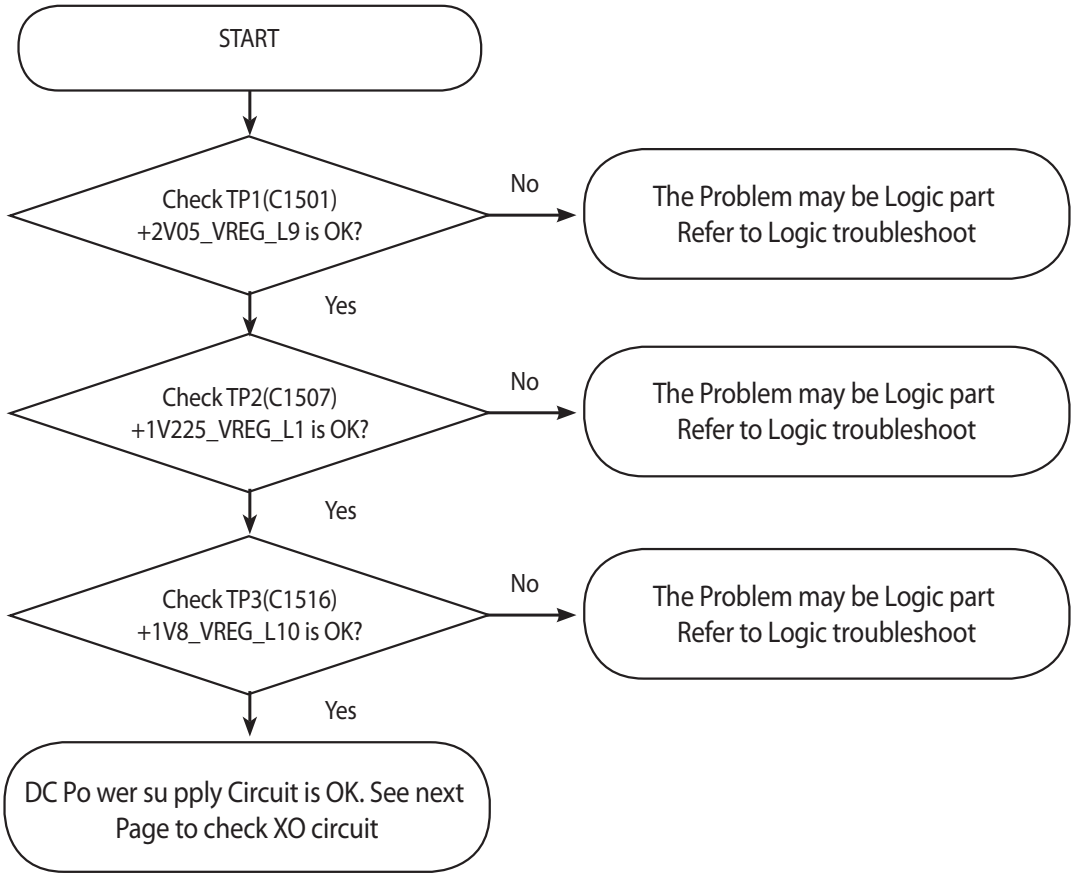

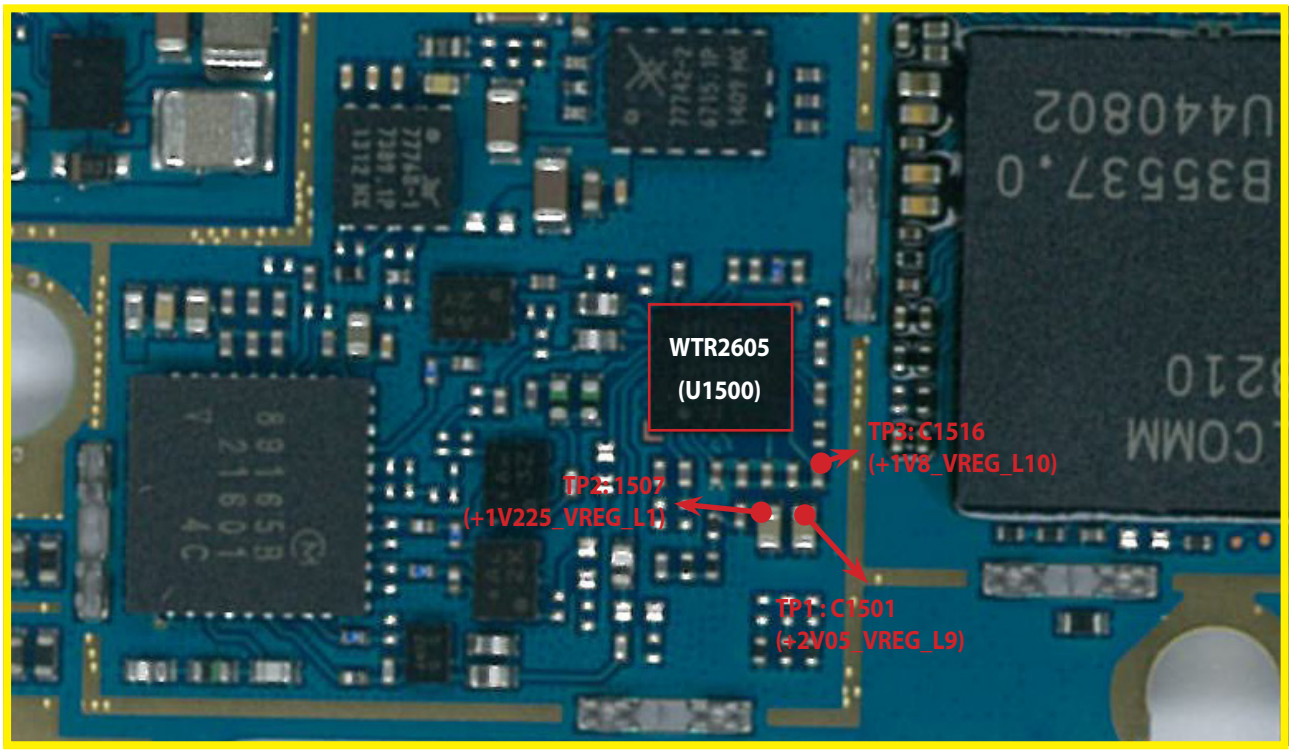

<Main Top>

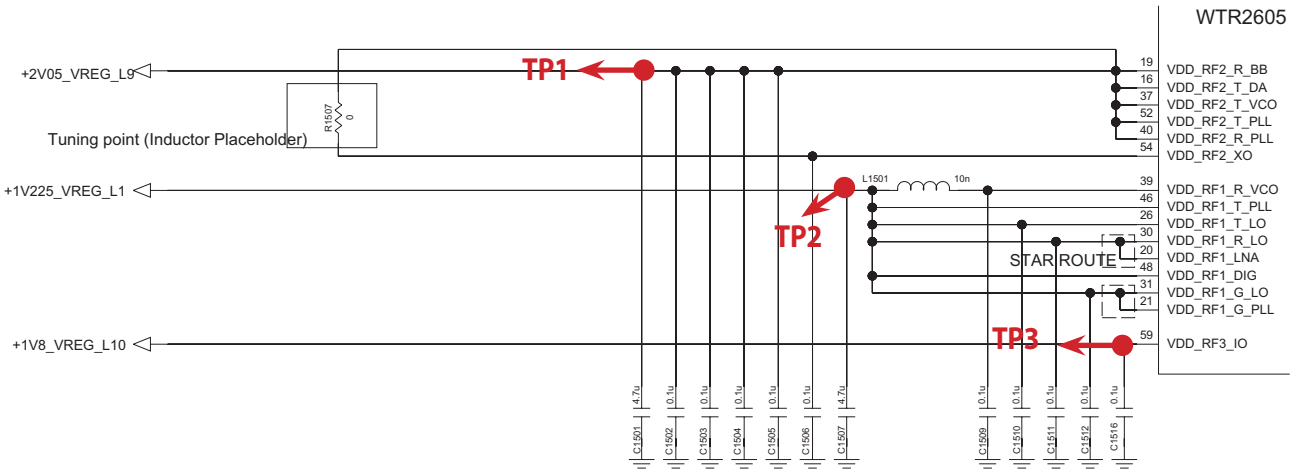

3.2.2.2 Checking WTR2605 XO circuit

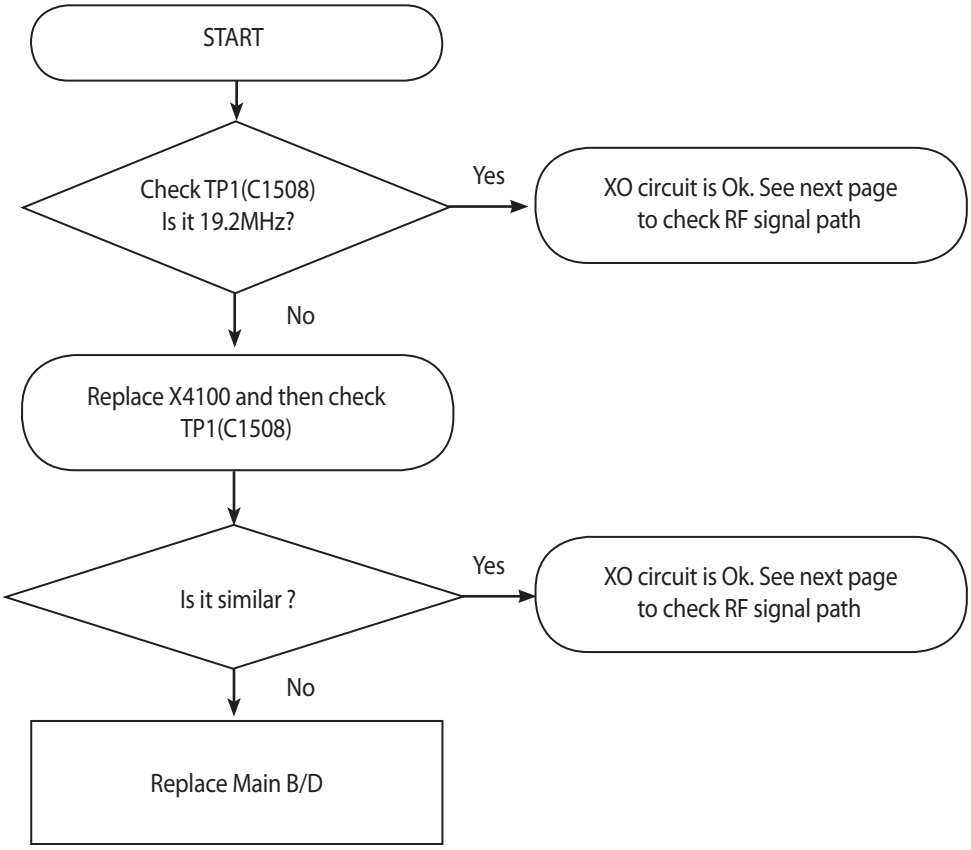

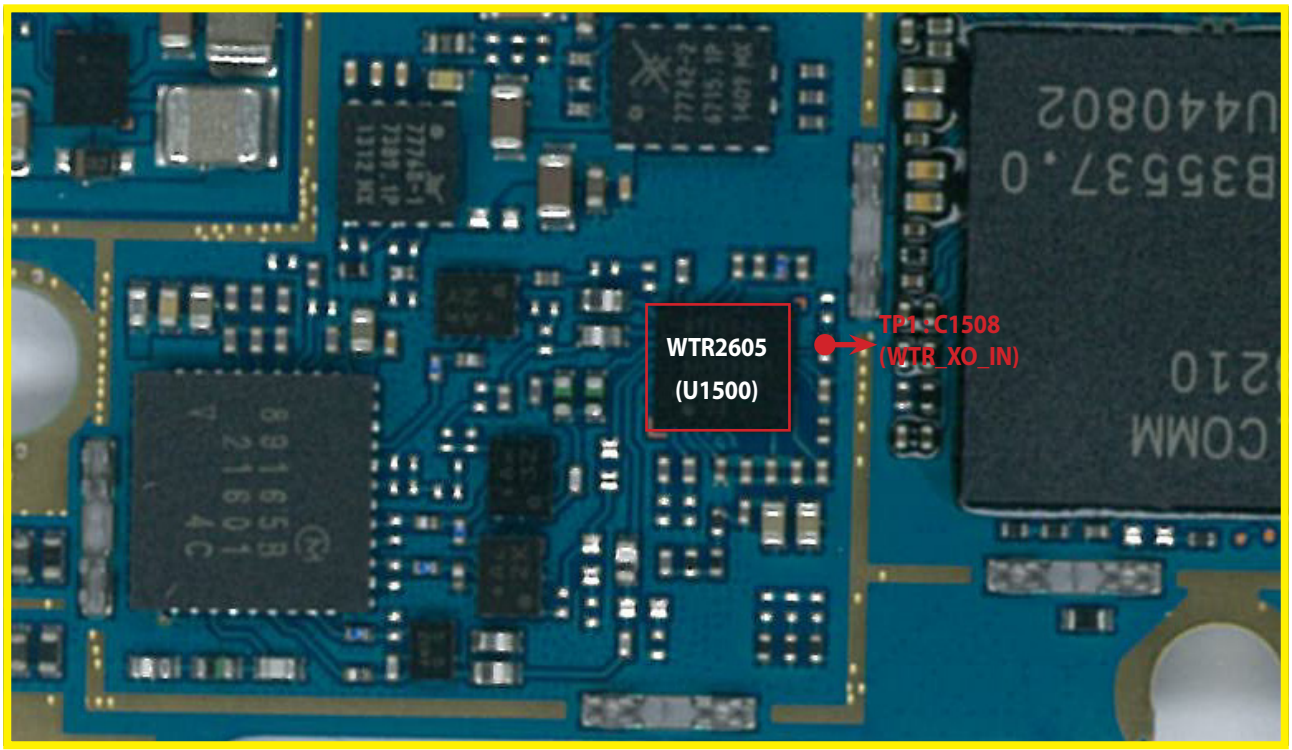

<Main Top>

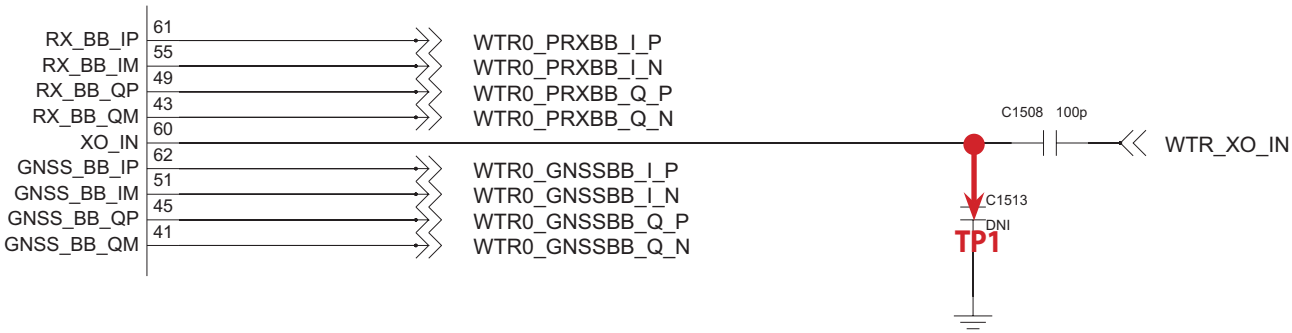

3.2.2.3 Checking B5 TX PA

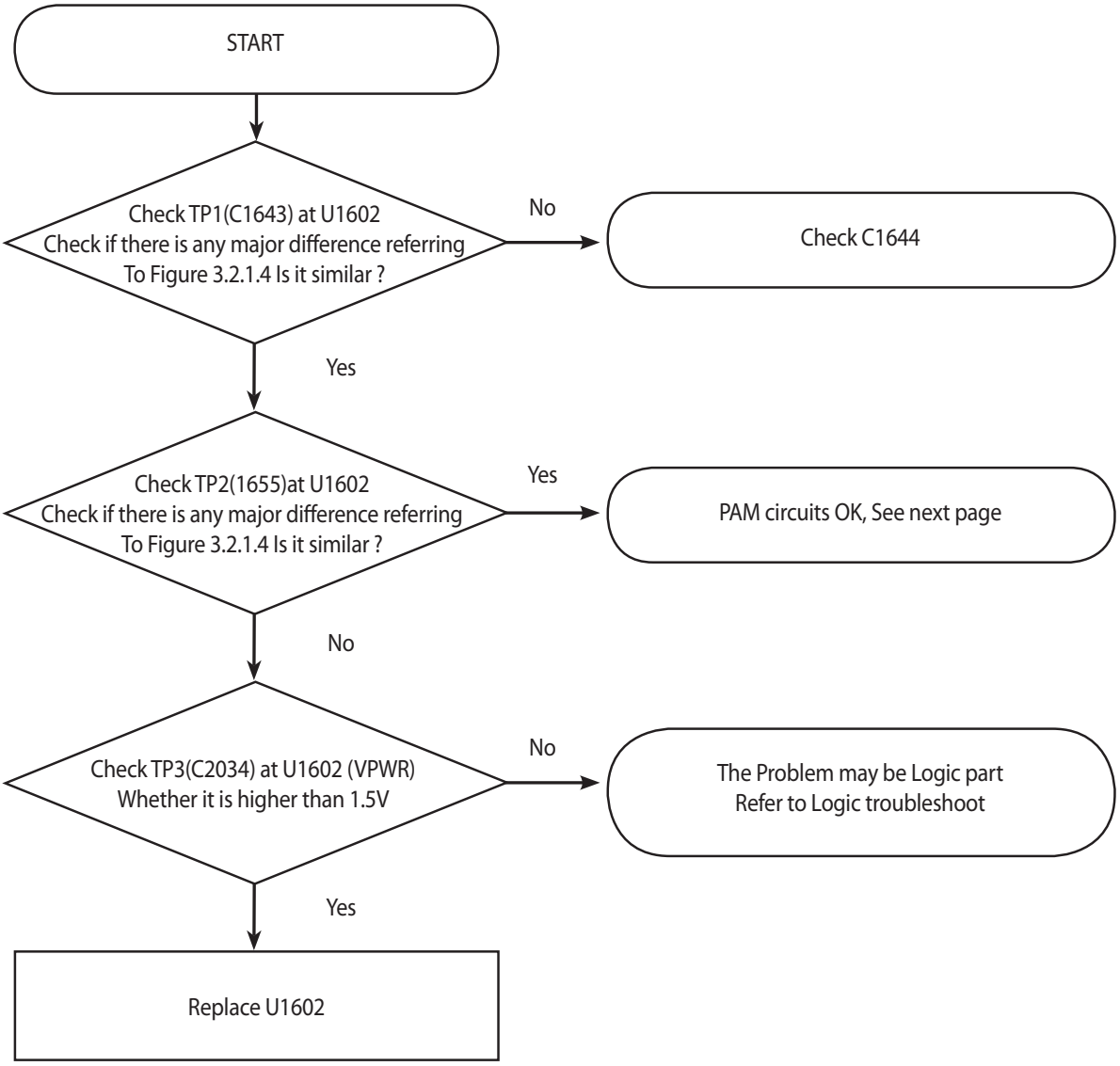

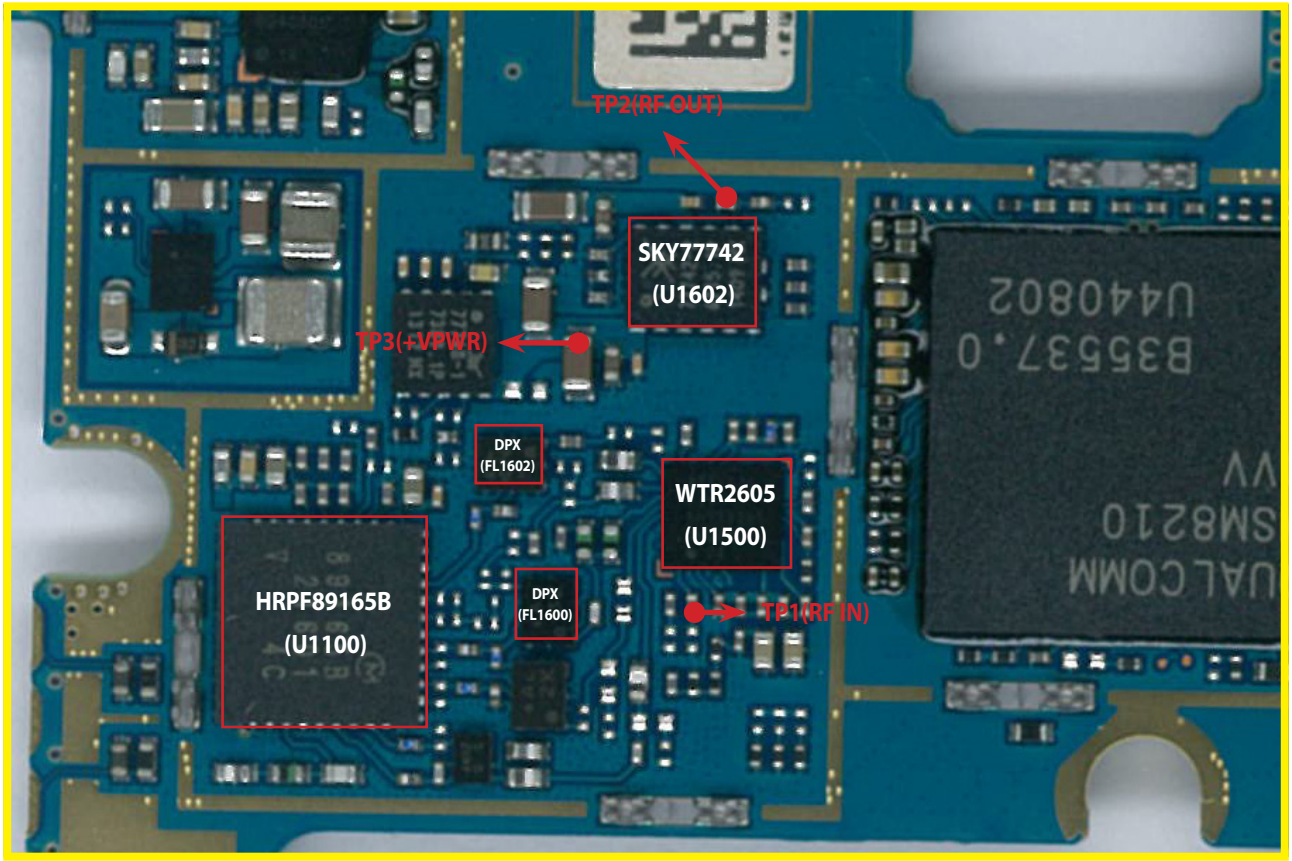

<Main Top>

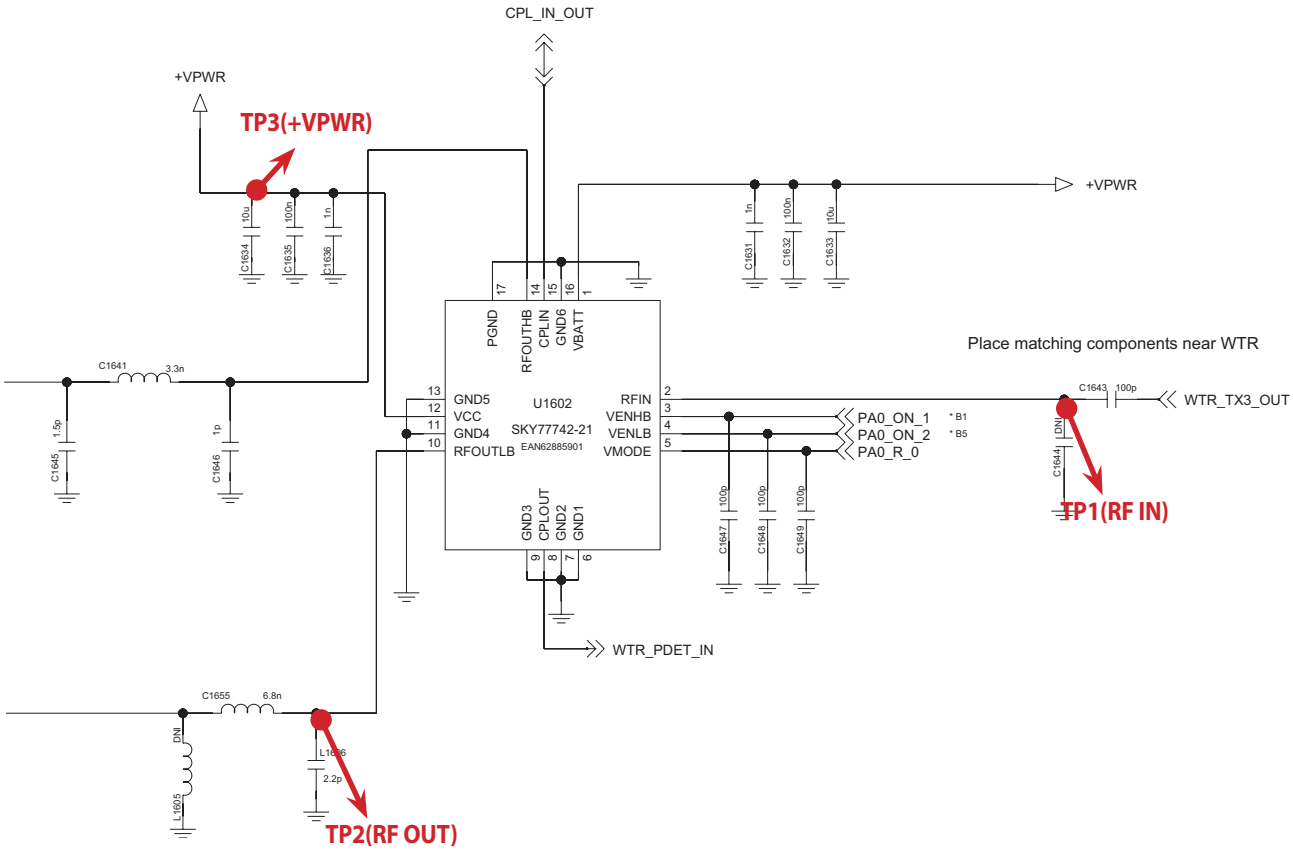

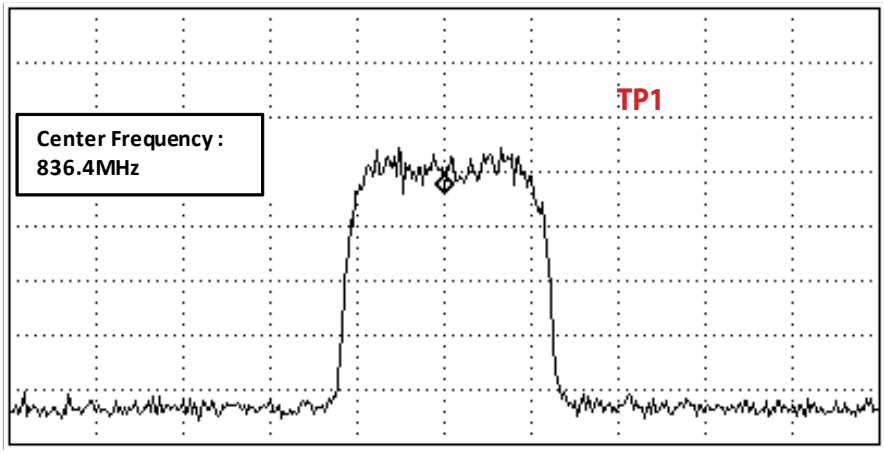

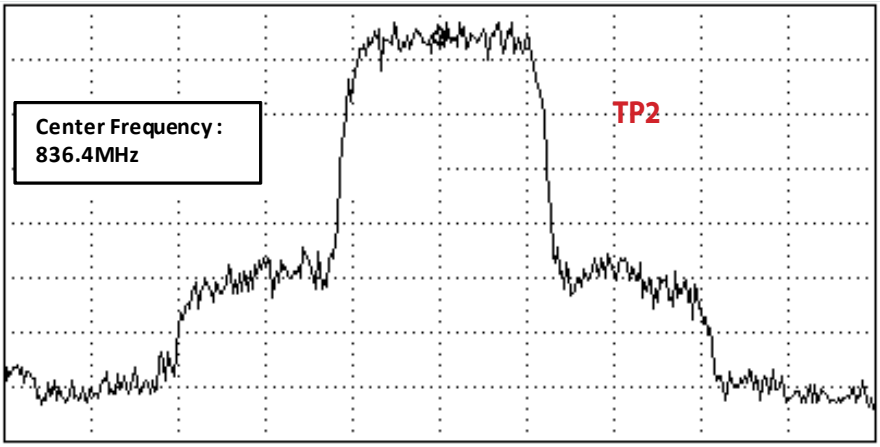

Figure 3.2.1.4

3.2.2.4 Checking RF signal path (DPX)

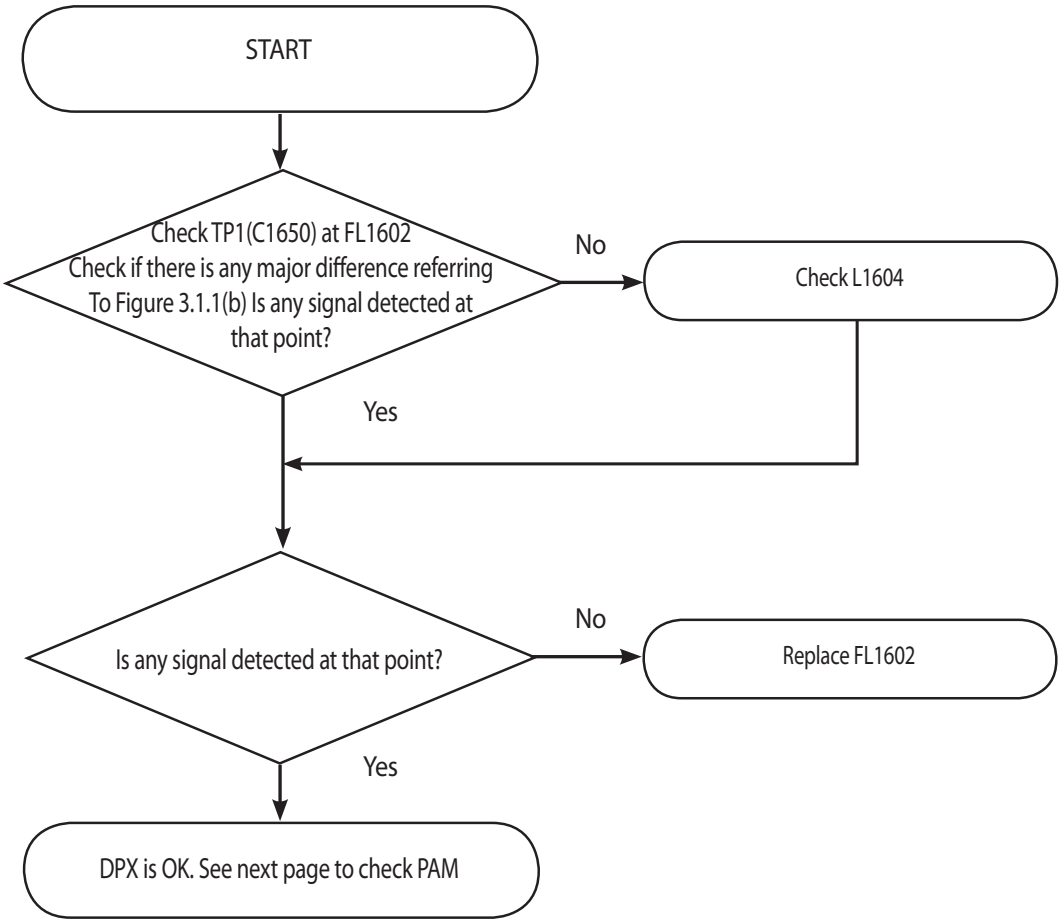

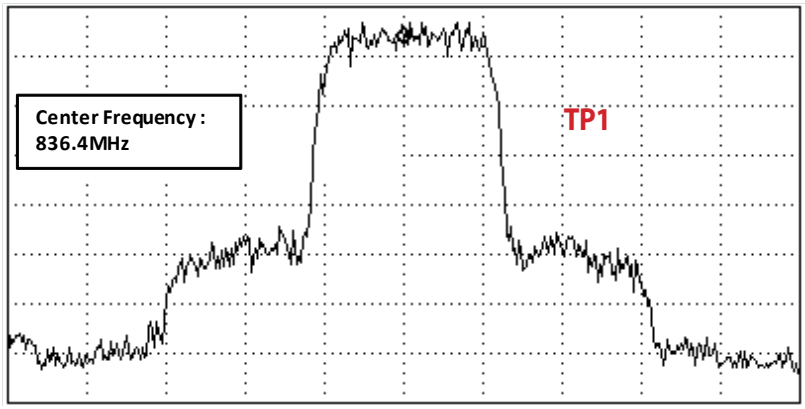

Figure 3.1.1 (b)

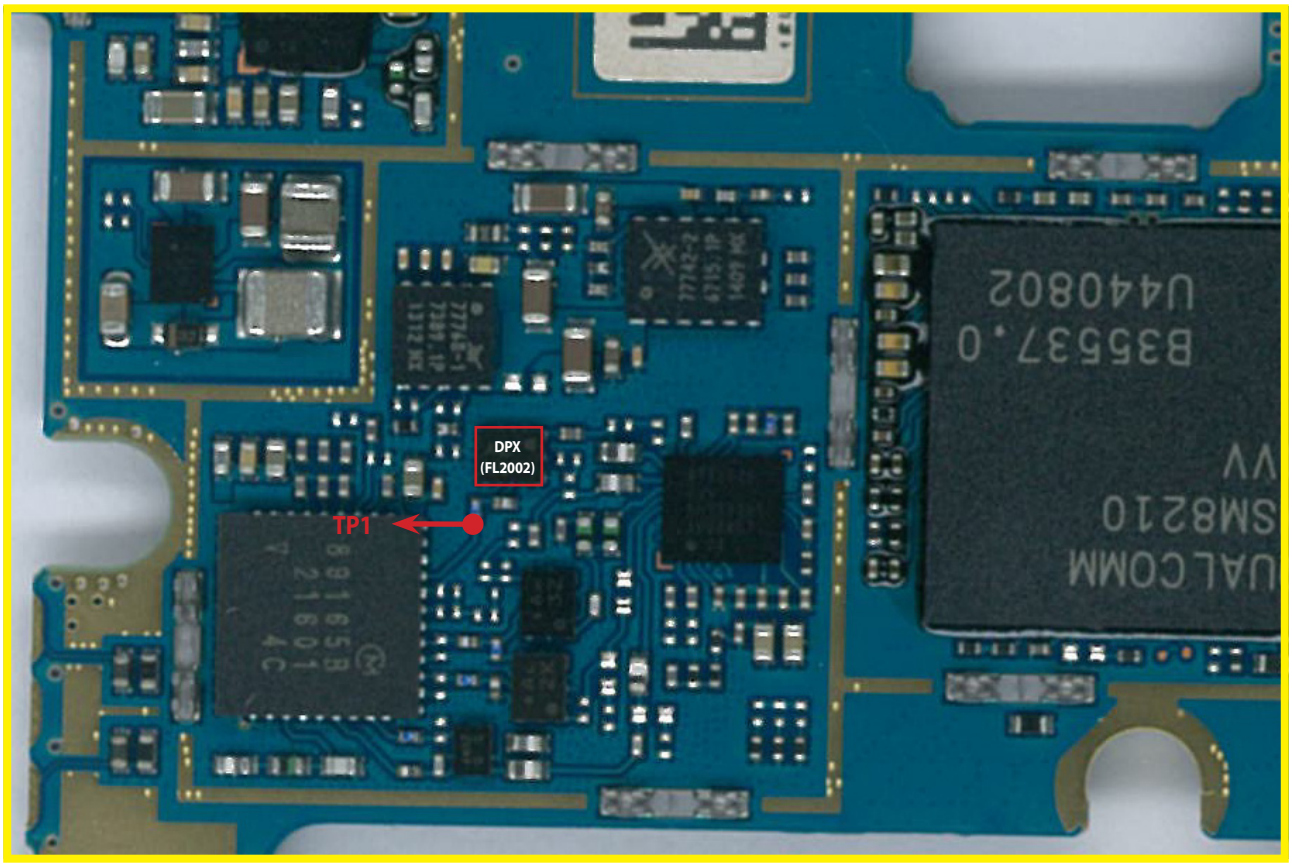

<Main Top>

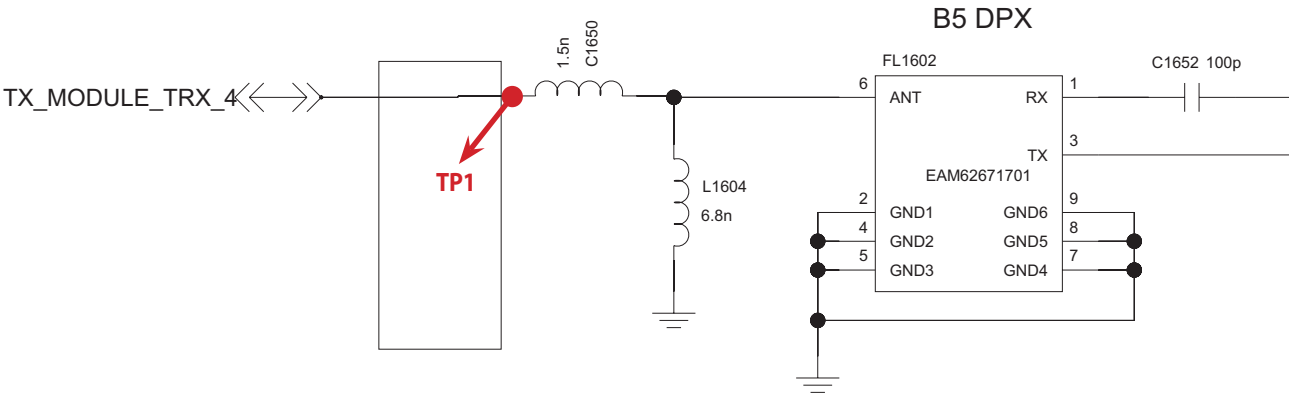

3.2.2.5 Checking RF signal path (TX Module)

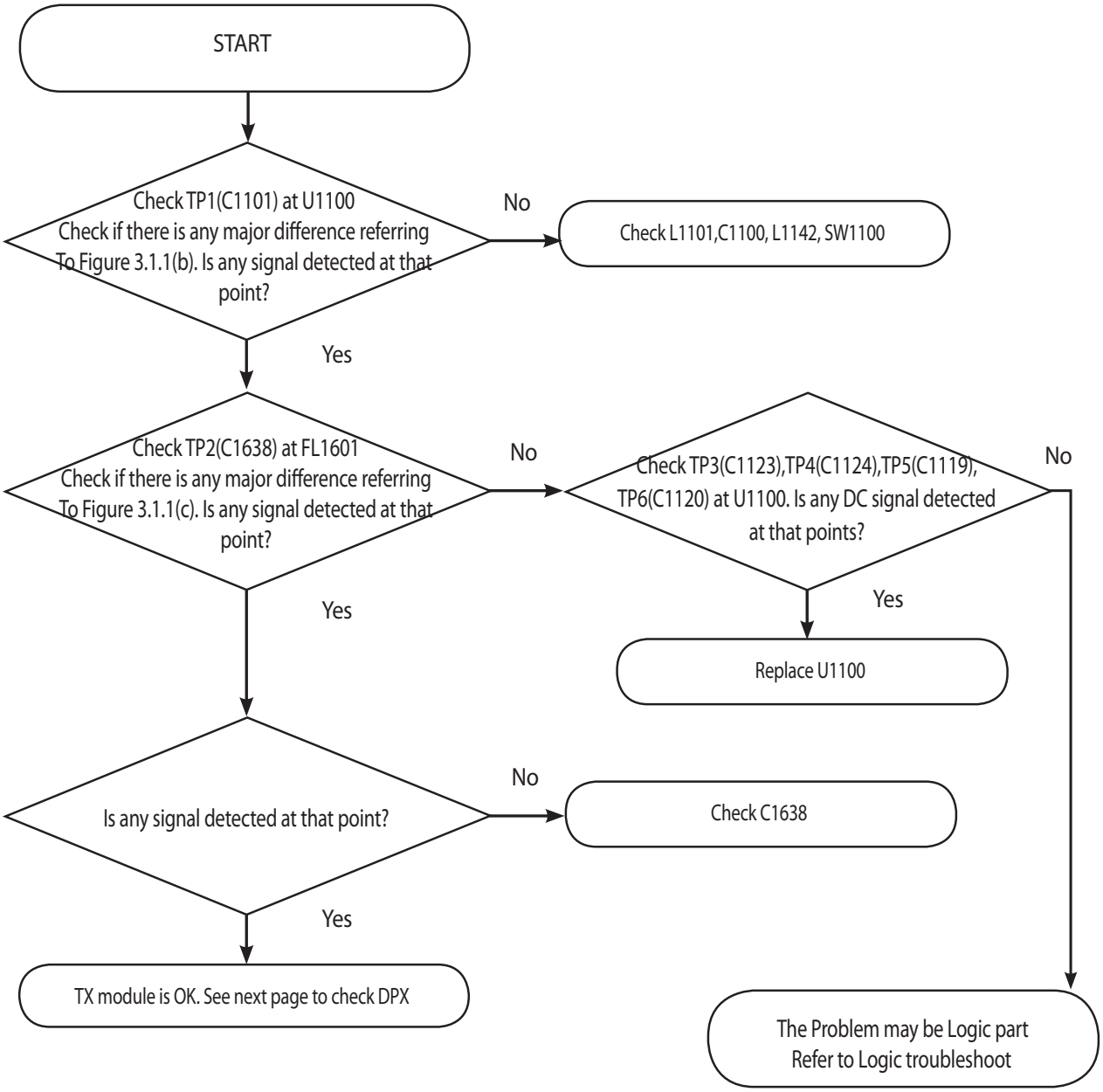

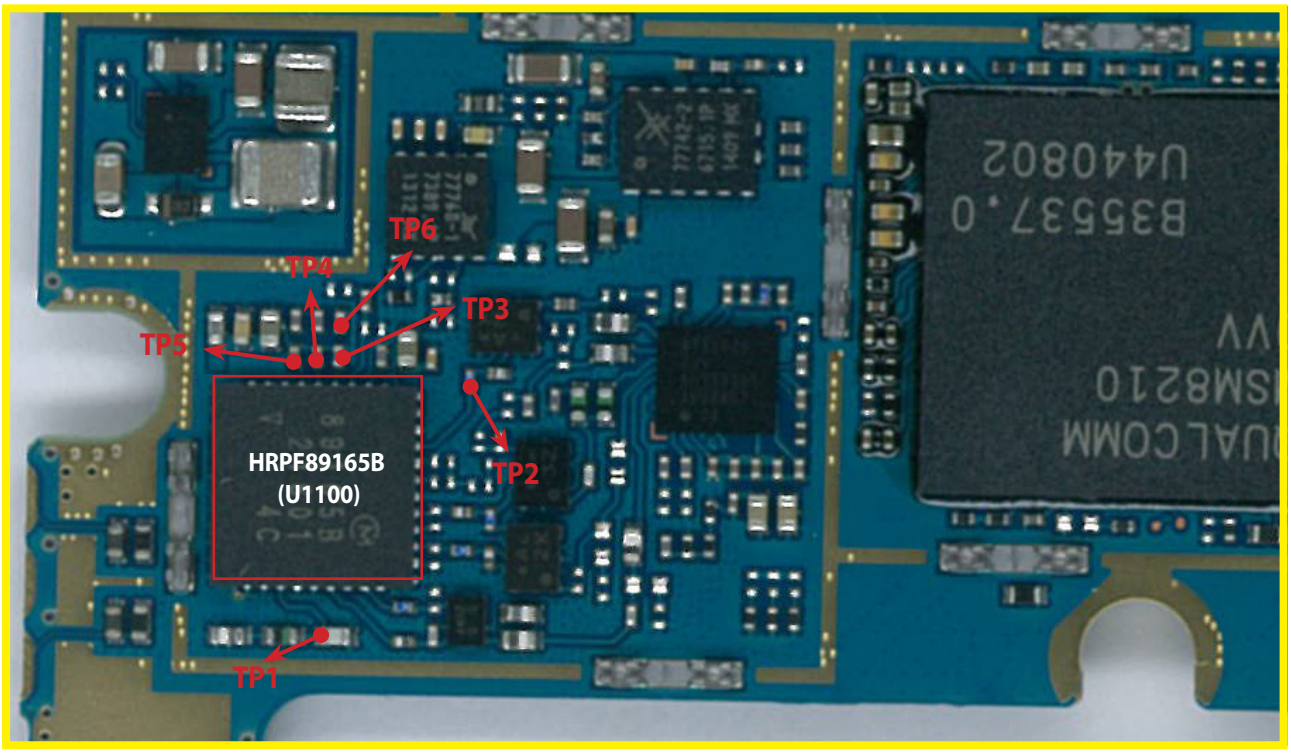

<Main Top>

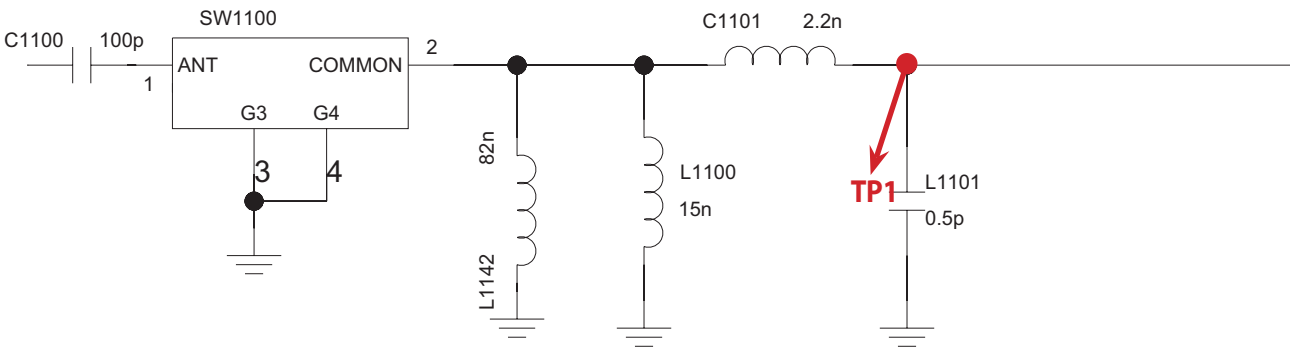

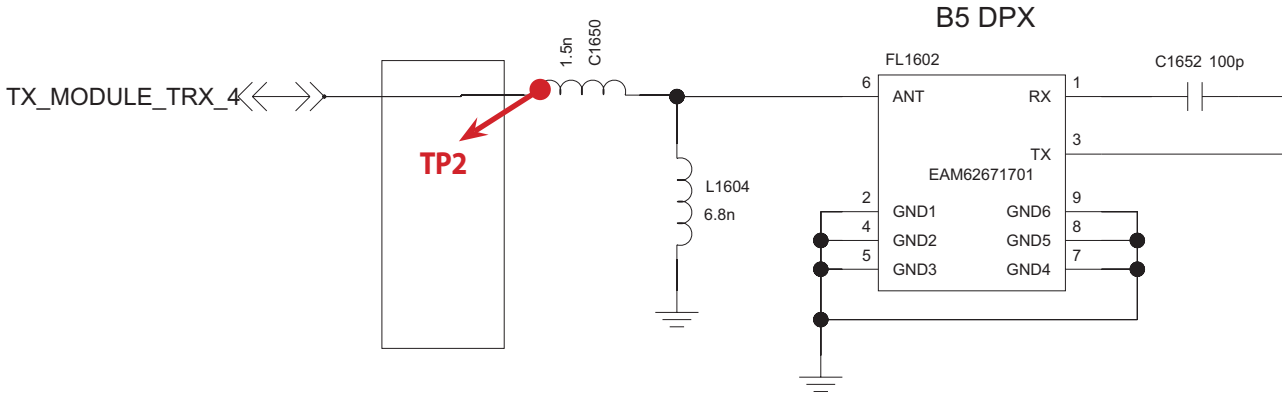

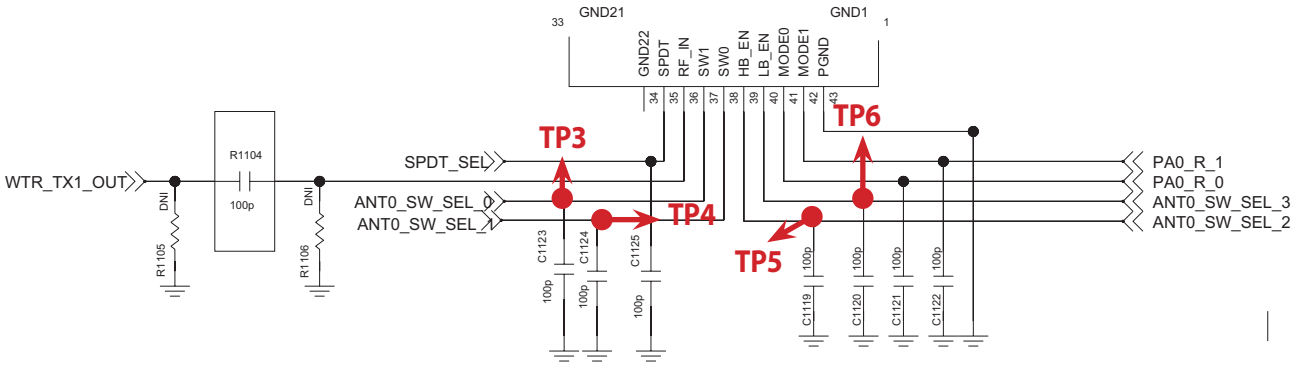

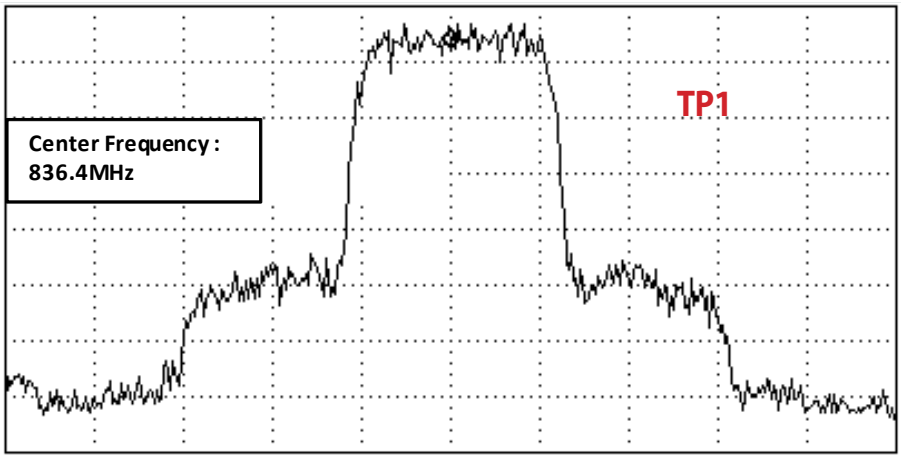

Figure 3.1.1 (b)

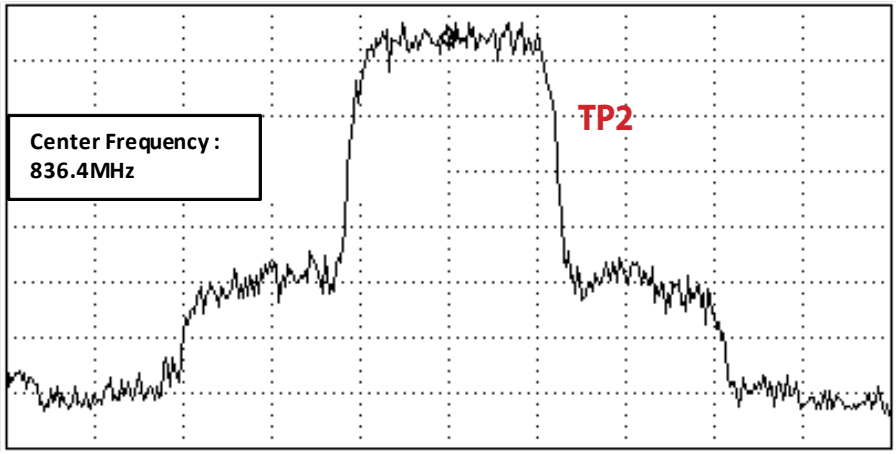

Figure 3.1.1 (c)

3.2.3 WCDMA_B8 Tx

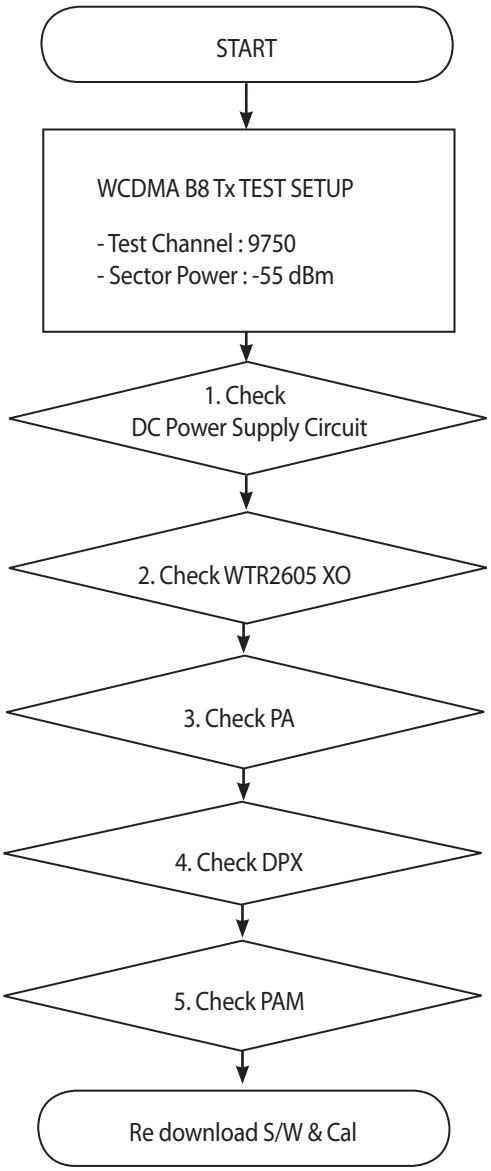

* There are no Test Points on the IQ Data Line. So It is impossible to check the IQ Data Wave form

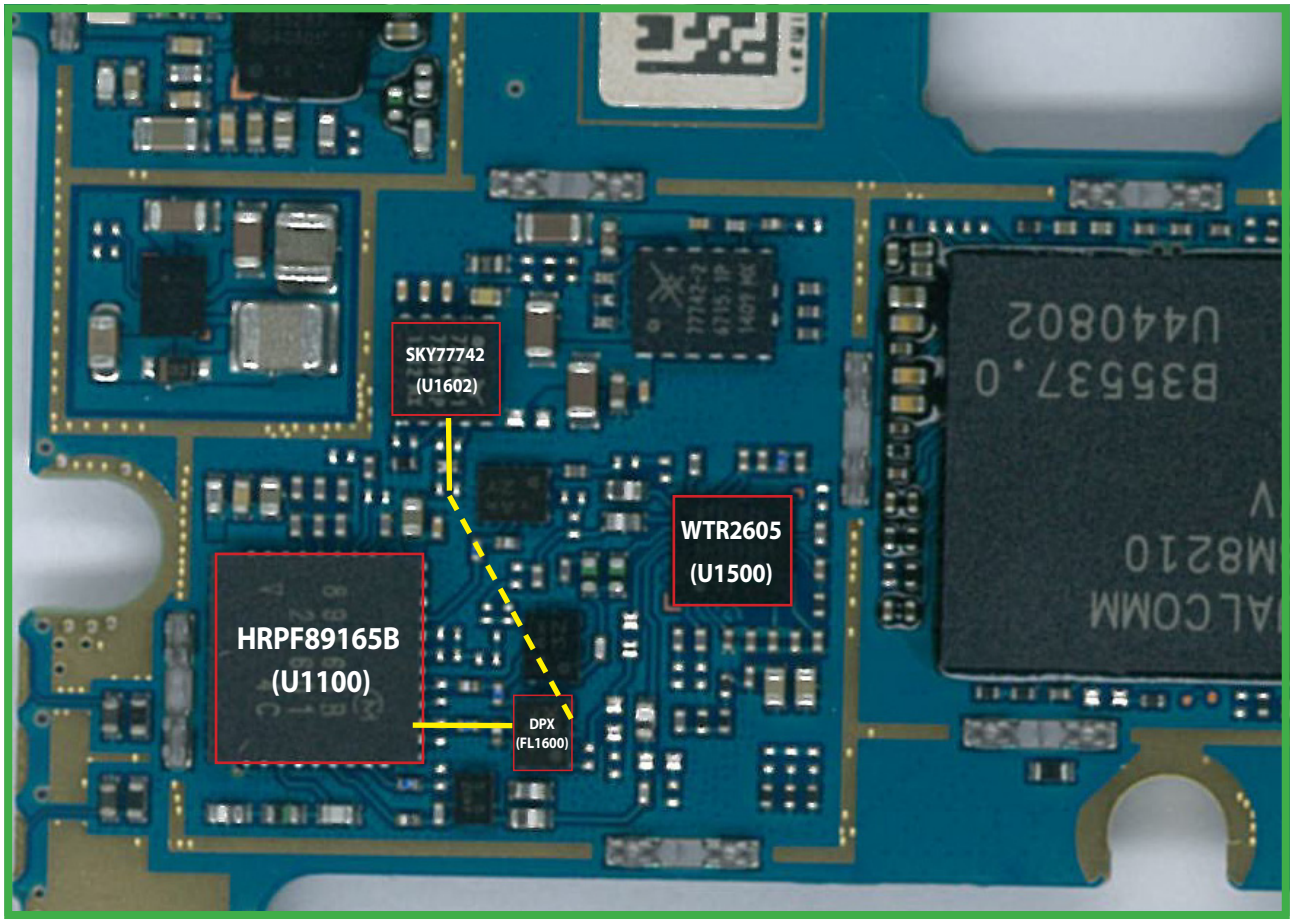

<Main Top>

3.2.3.1 Checking DC Power supply circuit

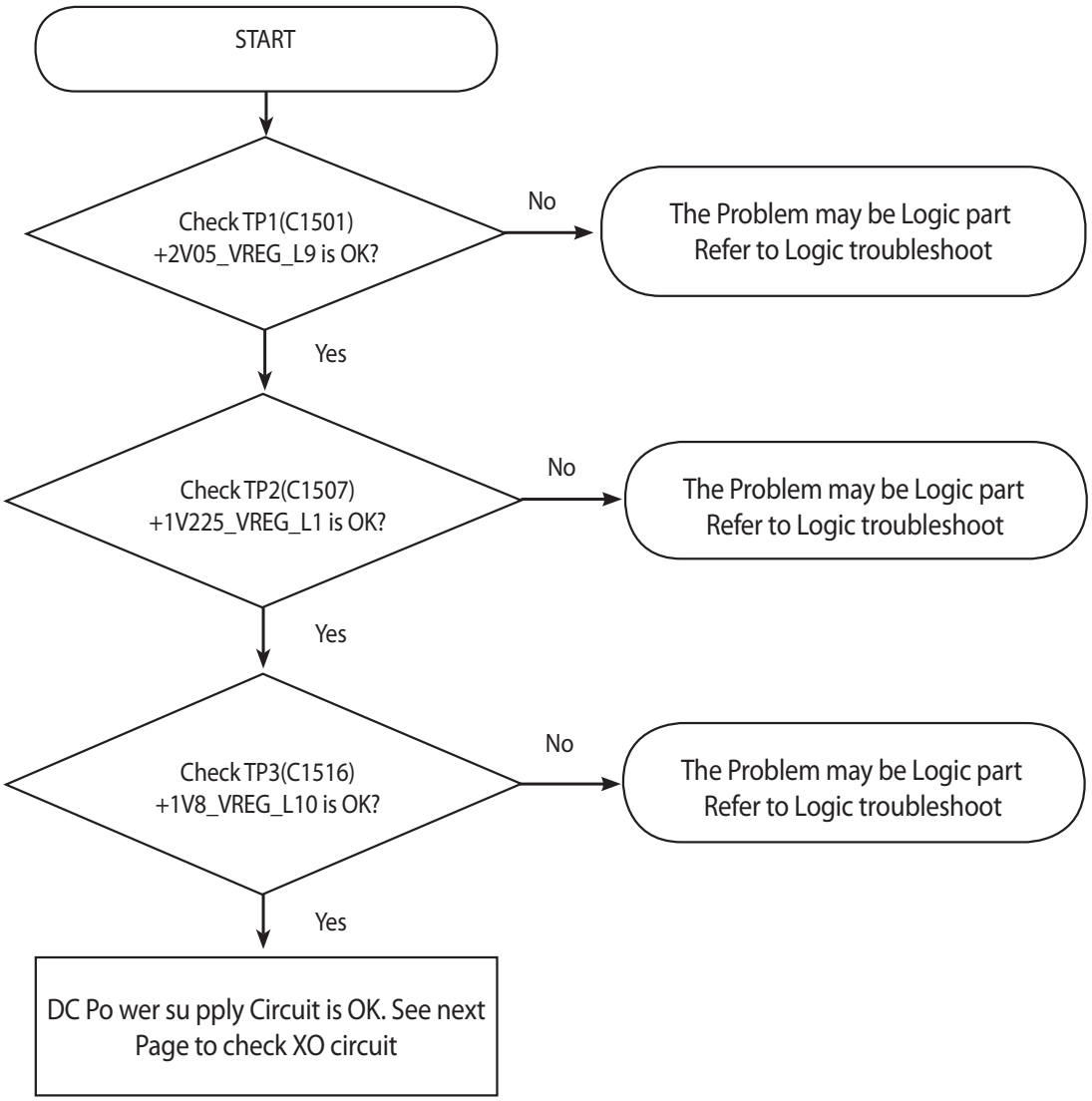

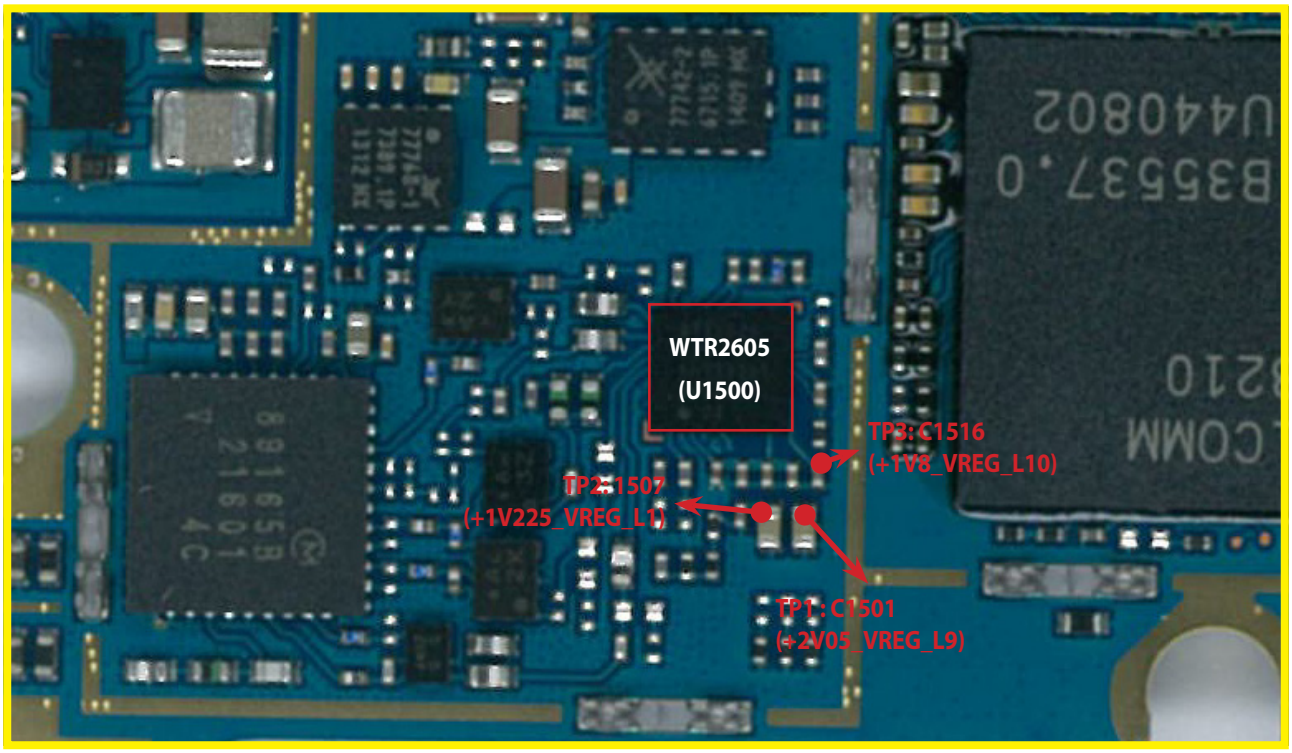

<Main Top>

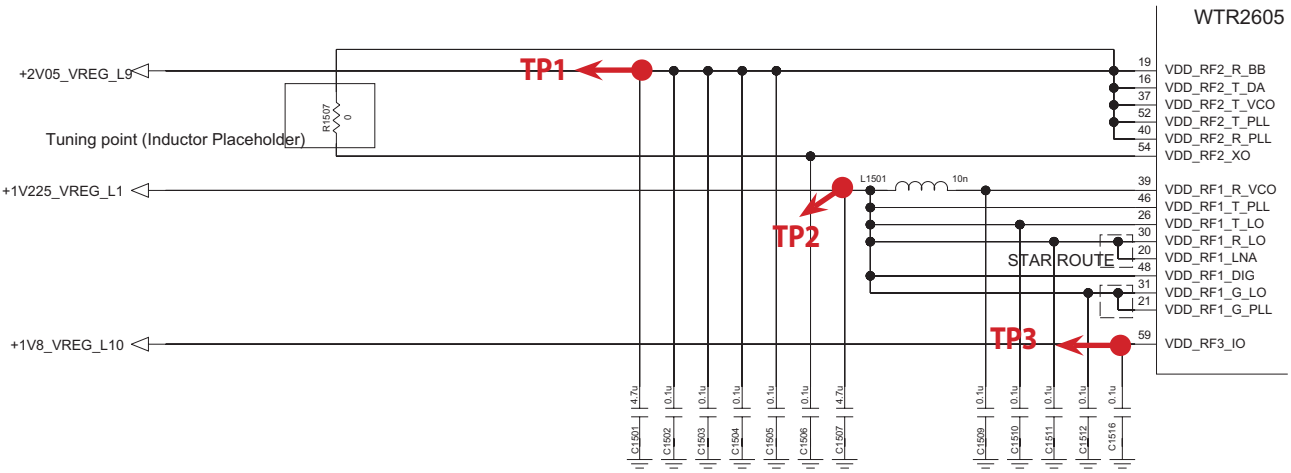

3.2.3.2 Checking WTR2605 XO circuit

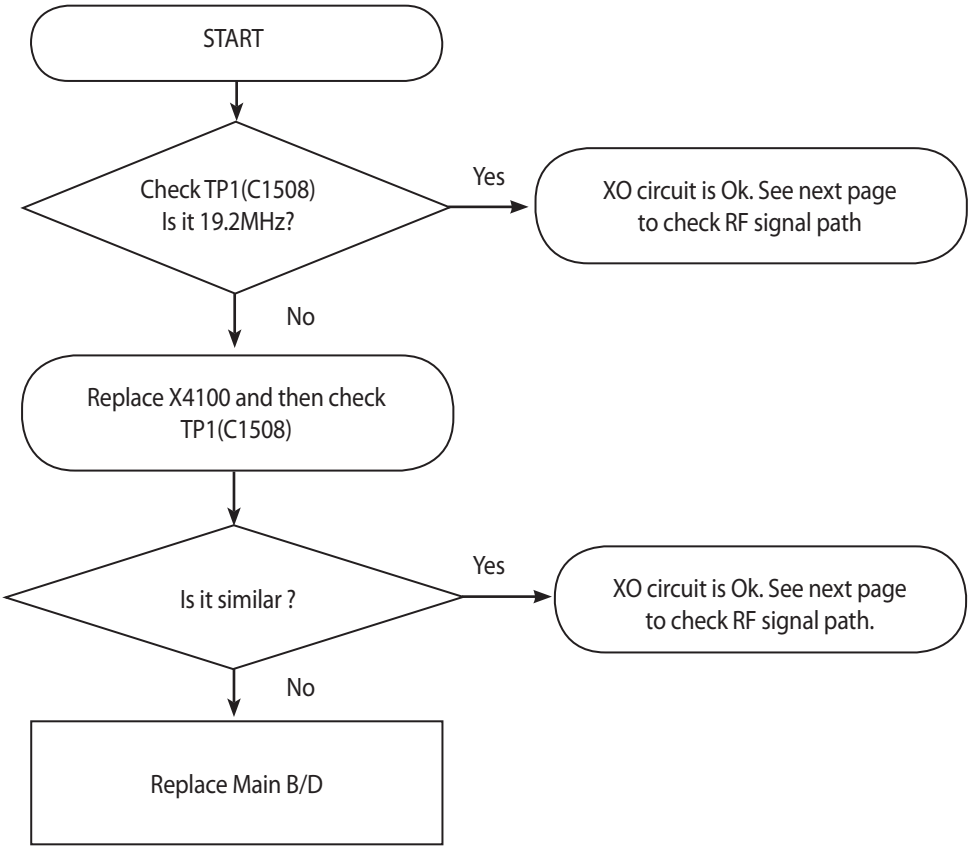

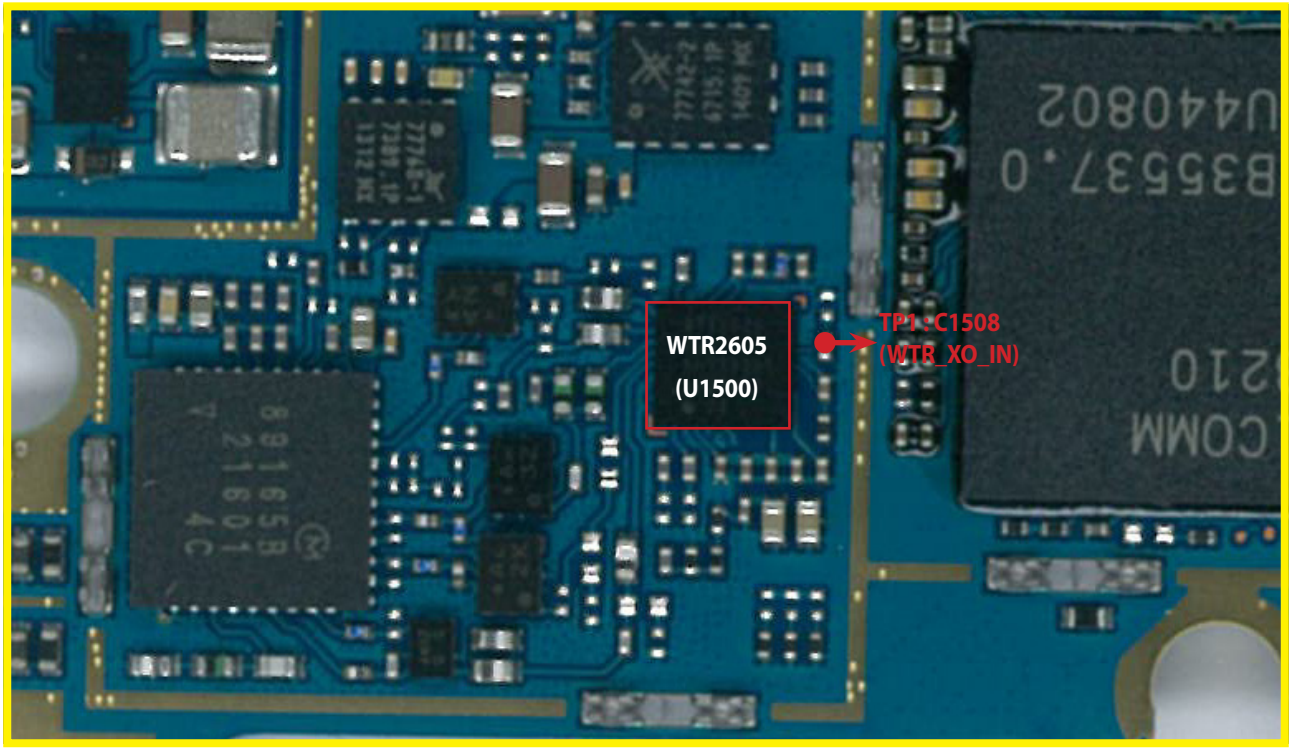

<Main Top>

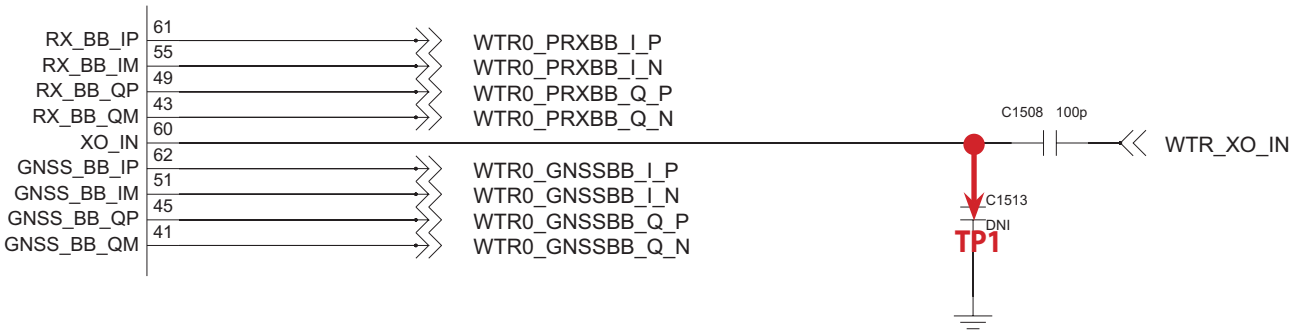

3.2.3.3 Checking B8 TX PA

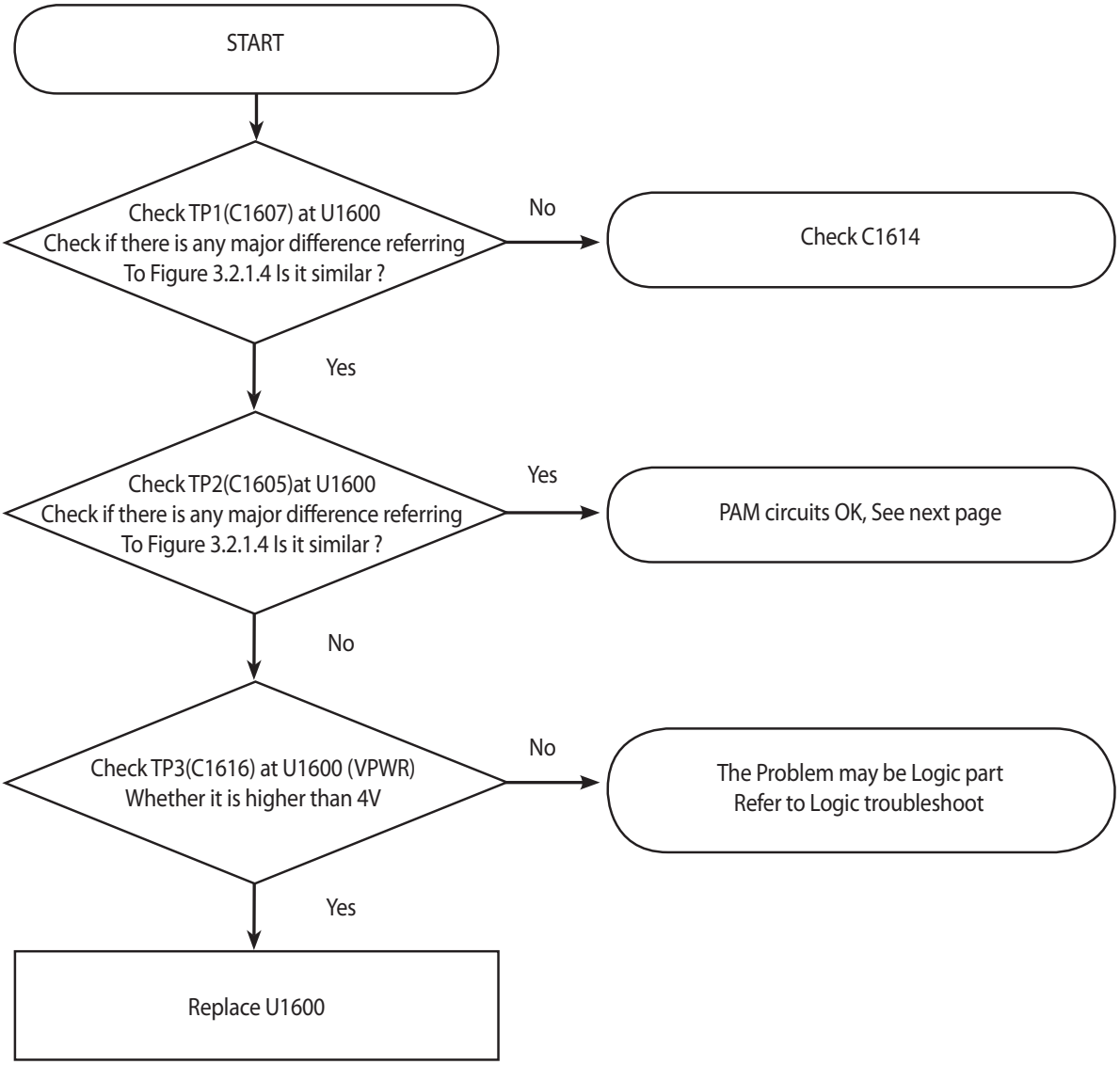

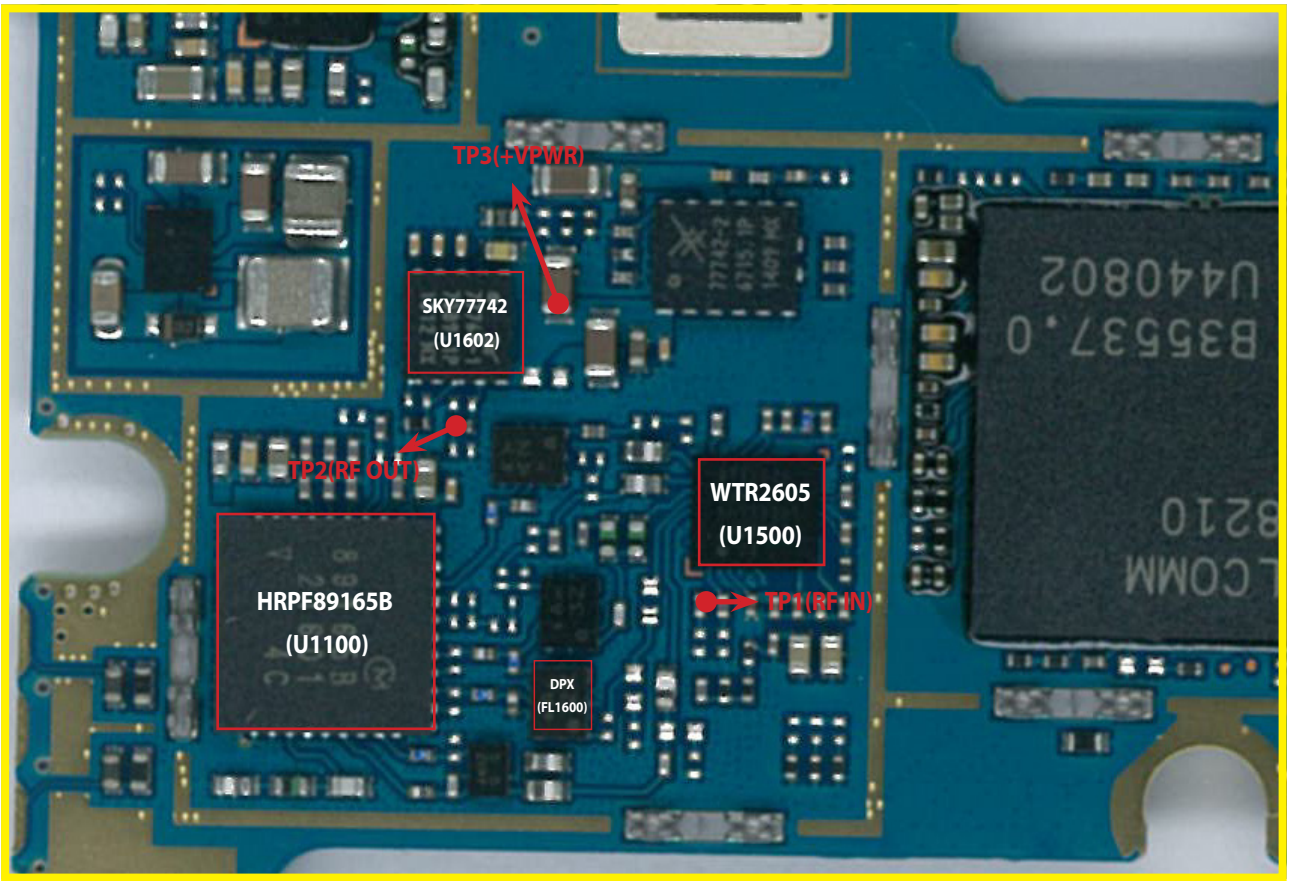

<Main Top>

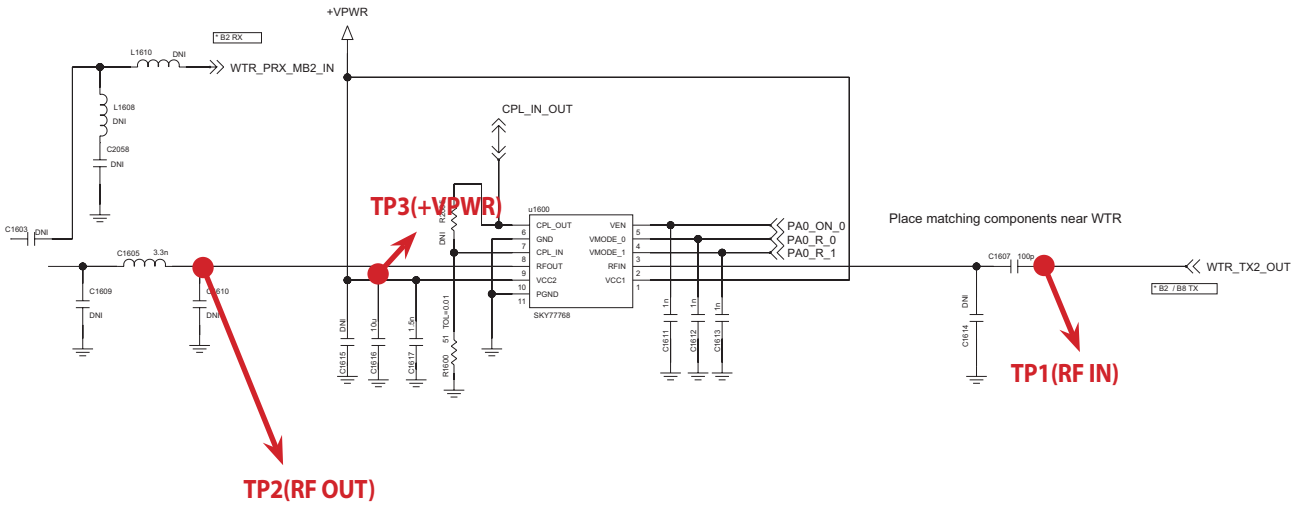

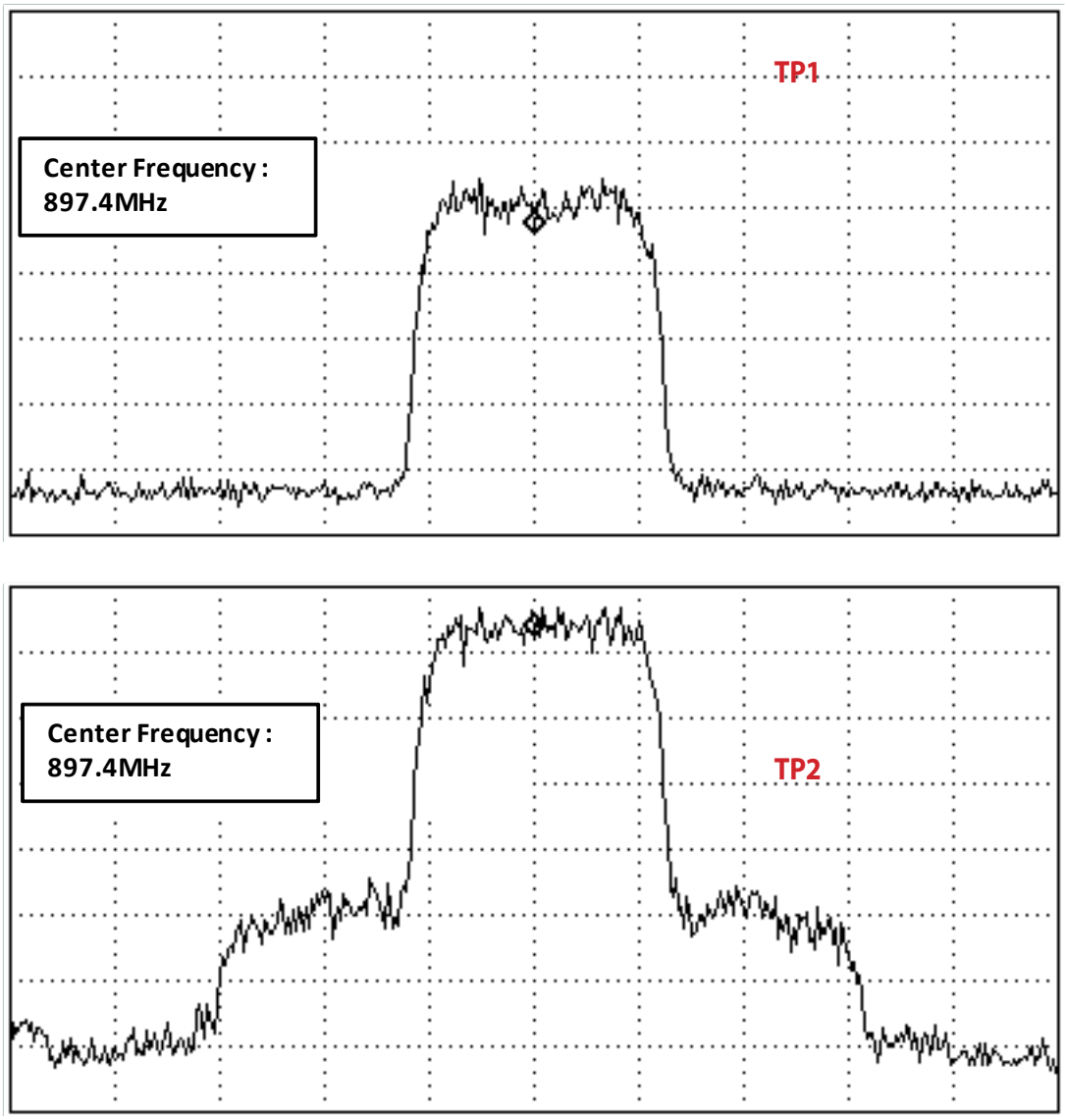

Figure 3.2.1.4

3.2.3.4 Checking RF signal path (DPX)

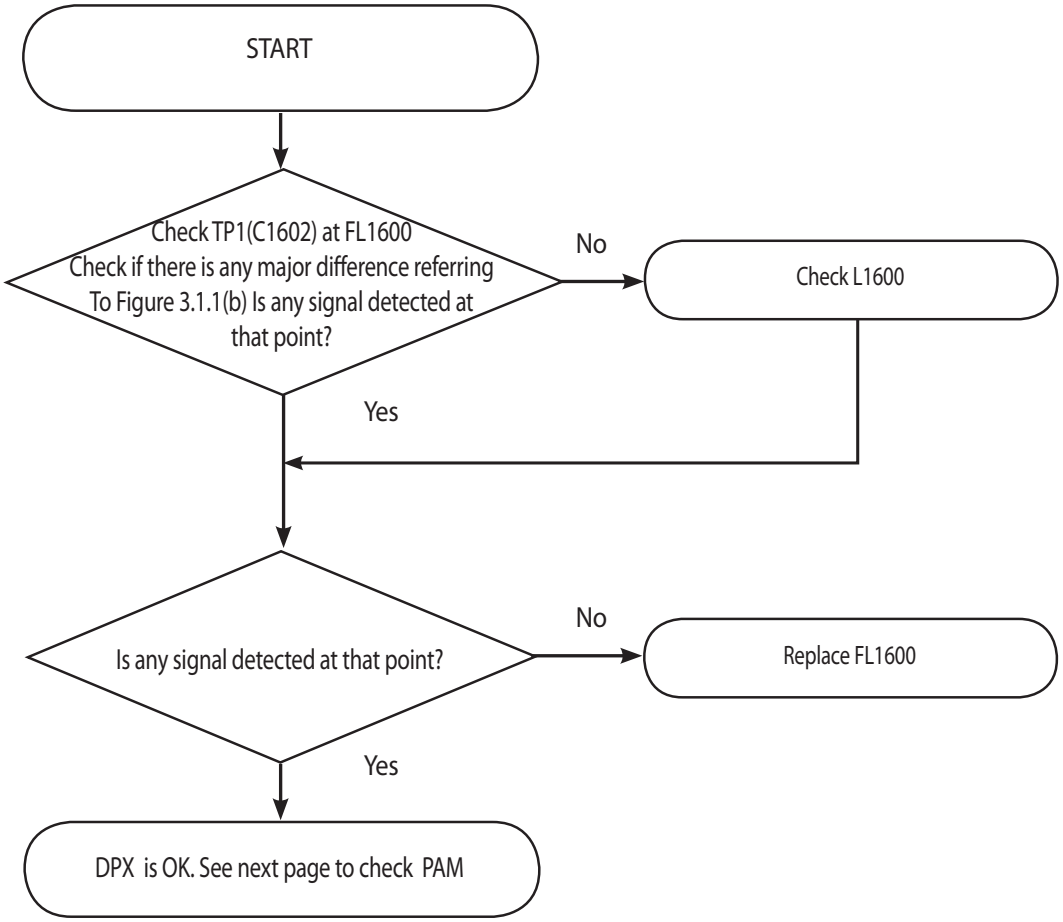

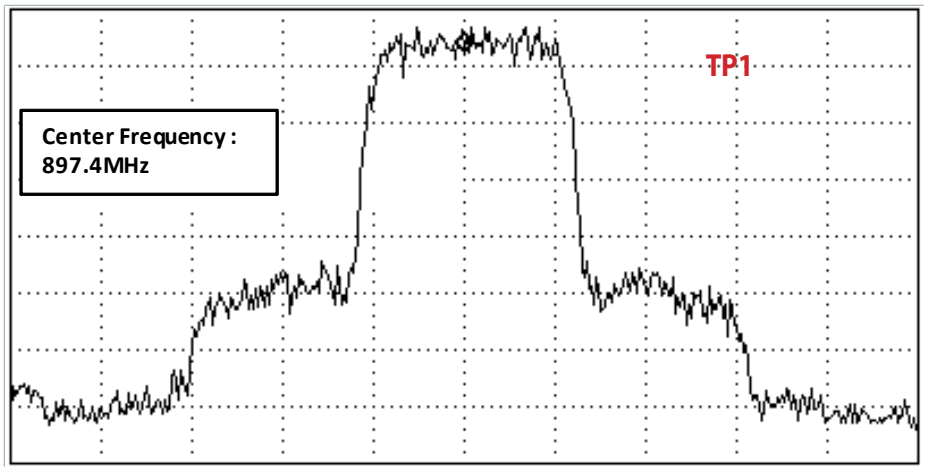

Figure 3.1.1 (b)

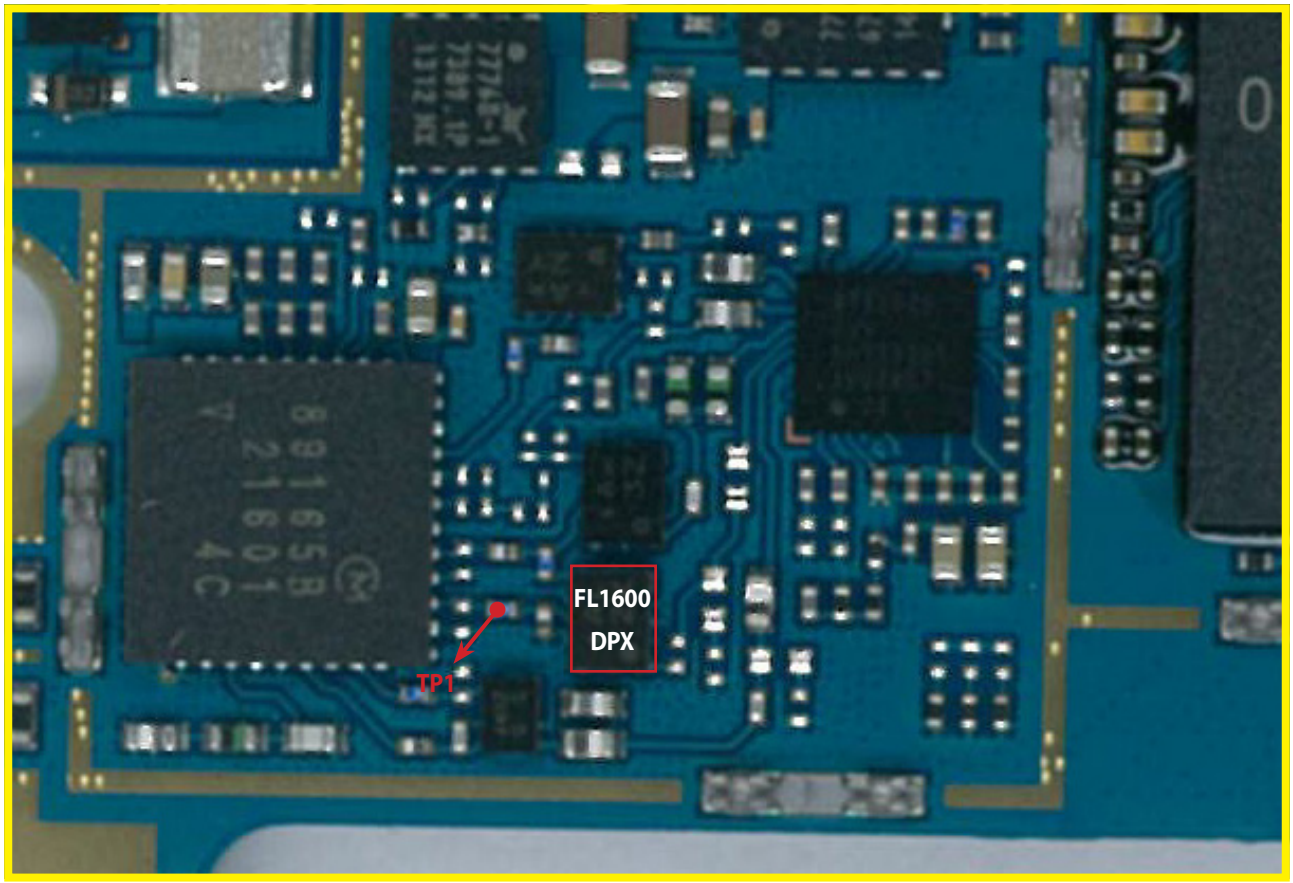

<Main Top>

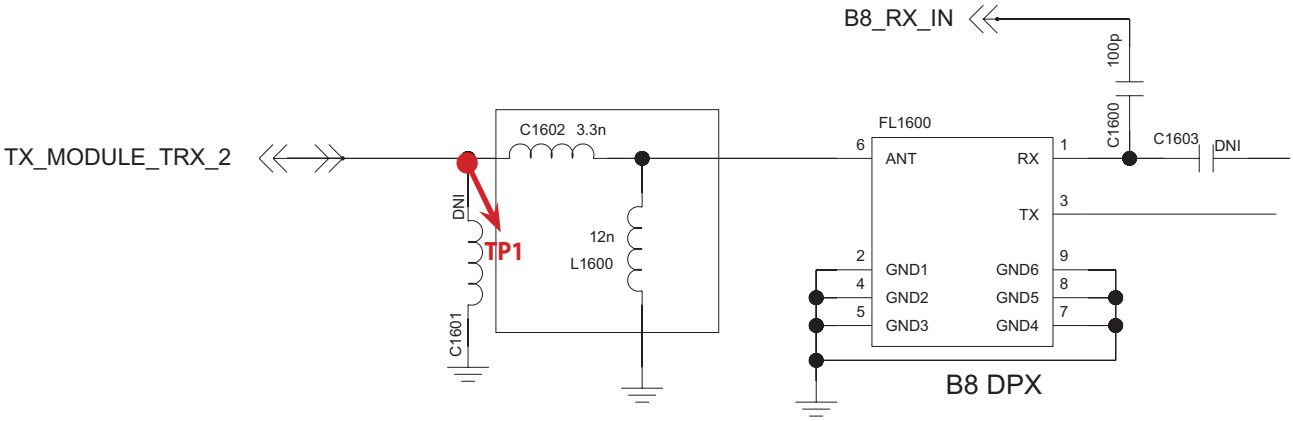

3.2.3.5 Checking RF signal path (TX Module)

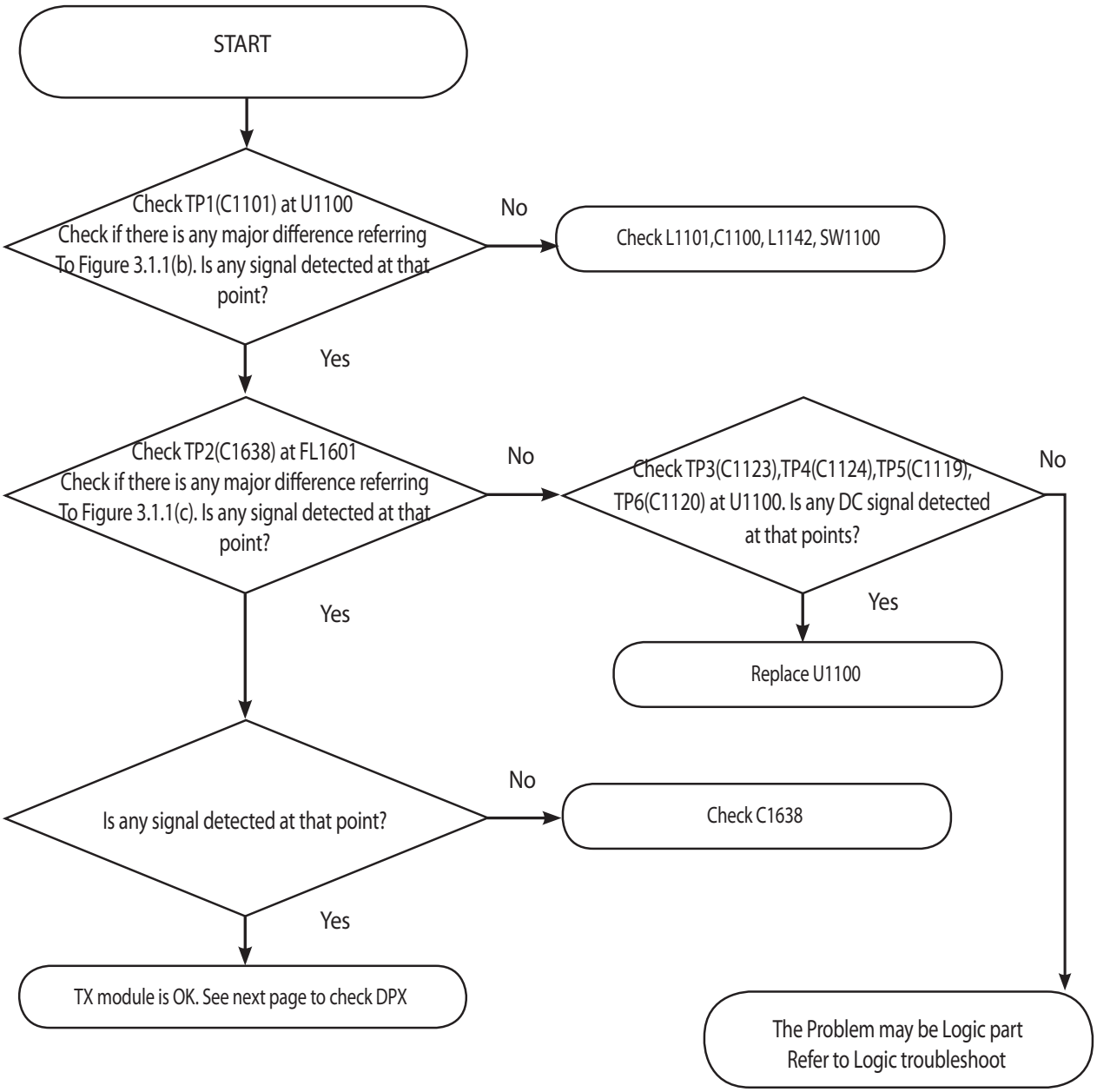

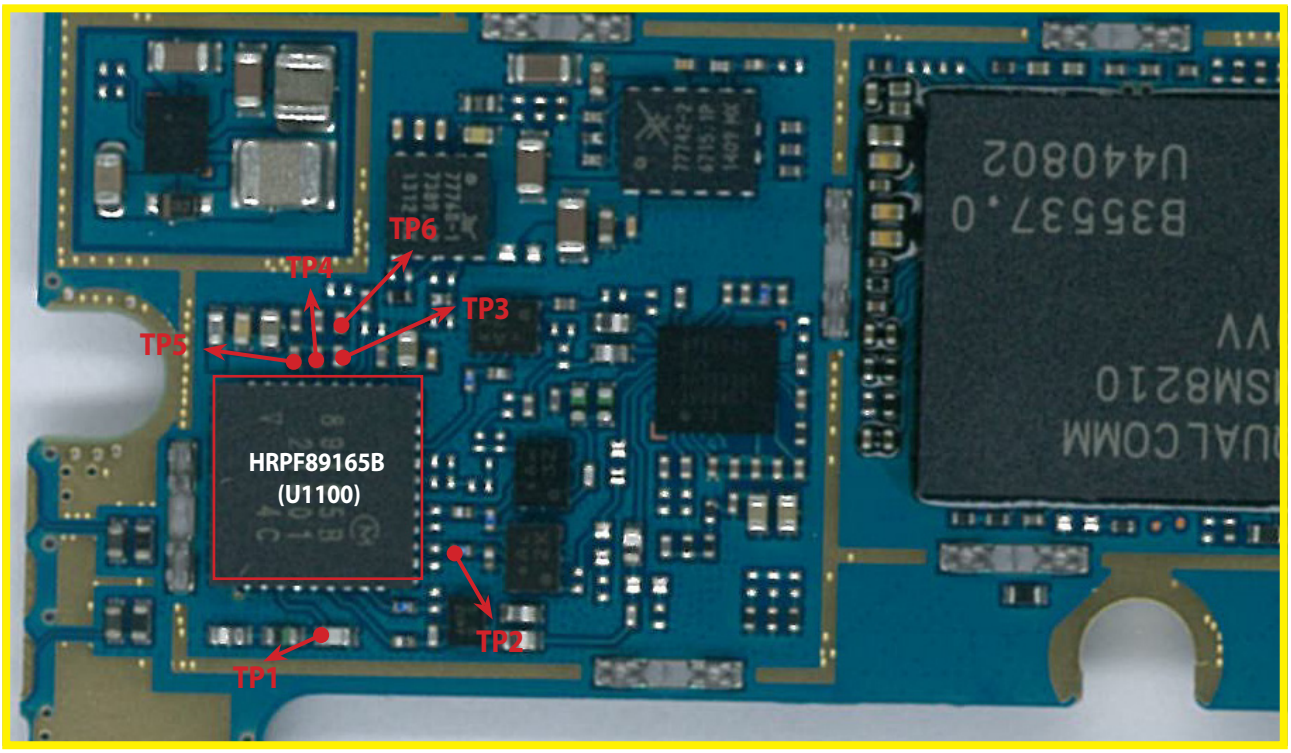

<Main Top>

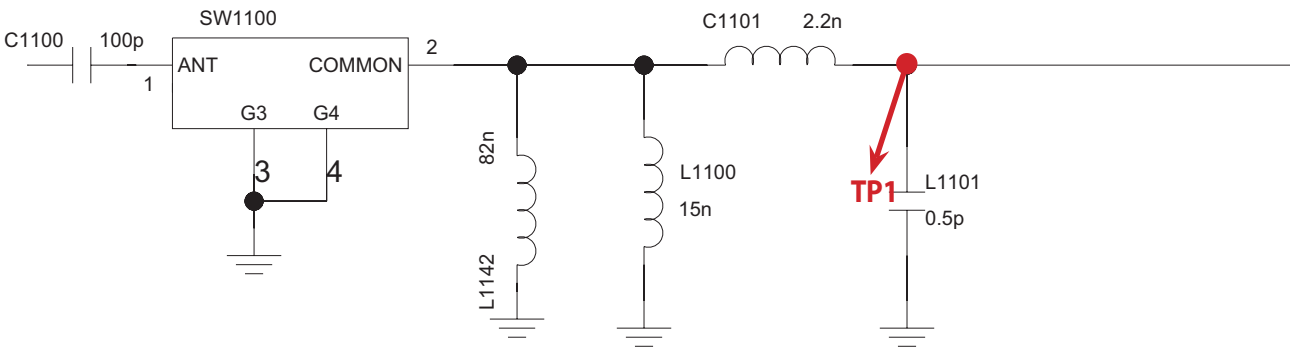

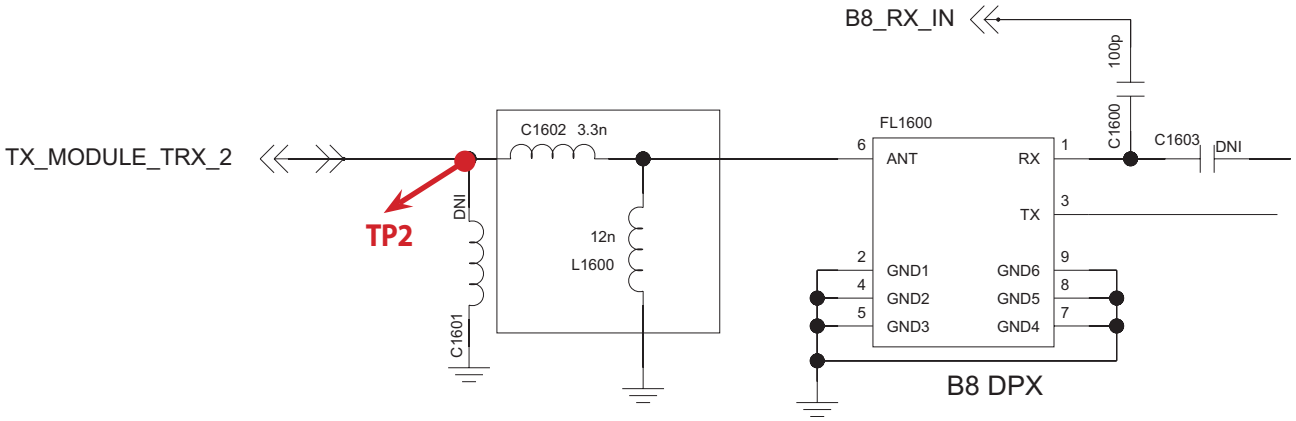

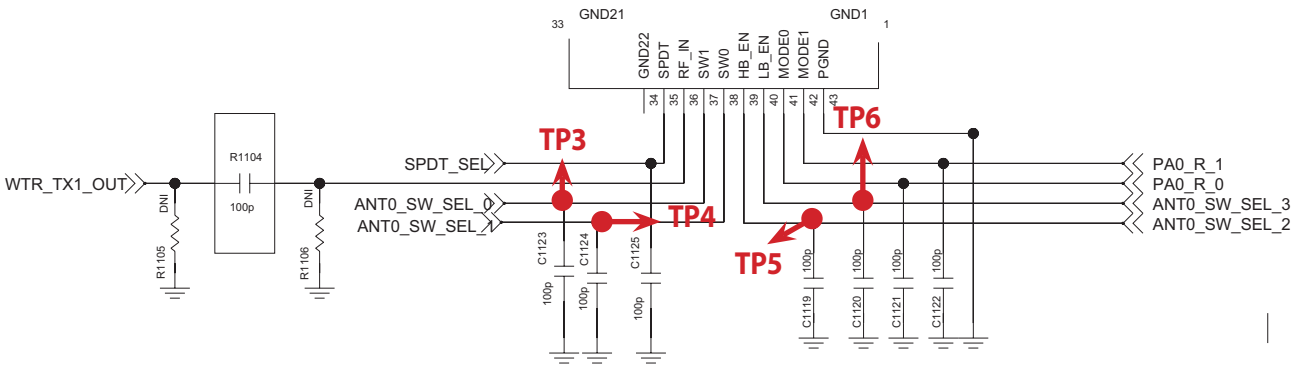

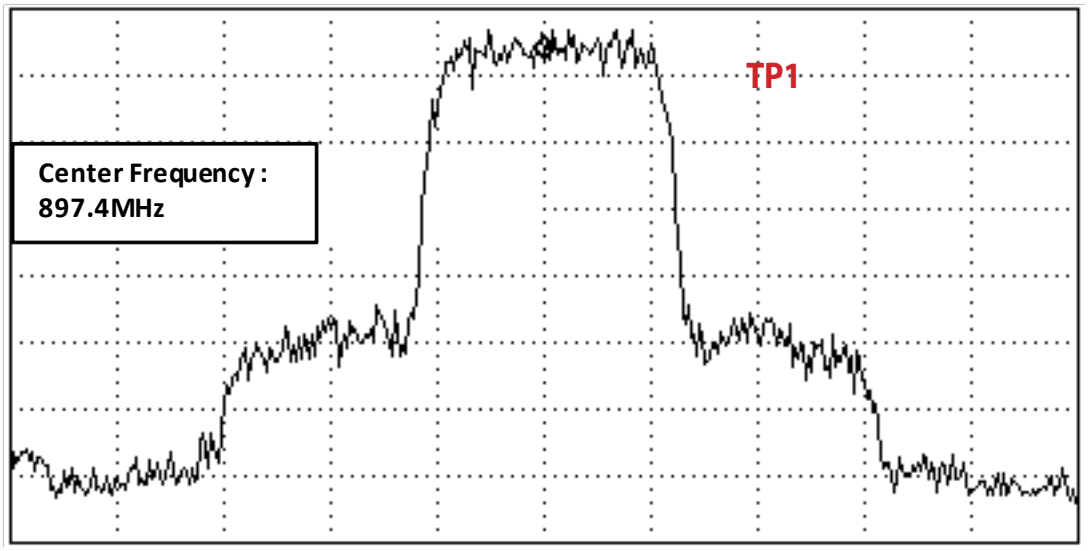

Figure 3.1.1 (b)

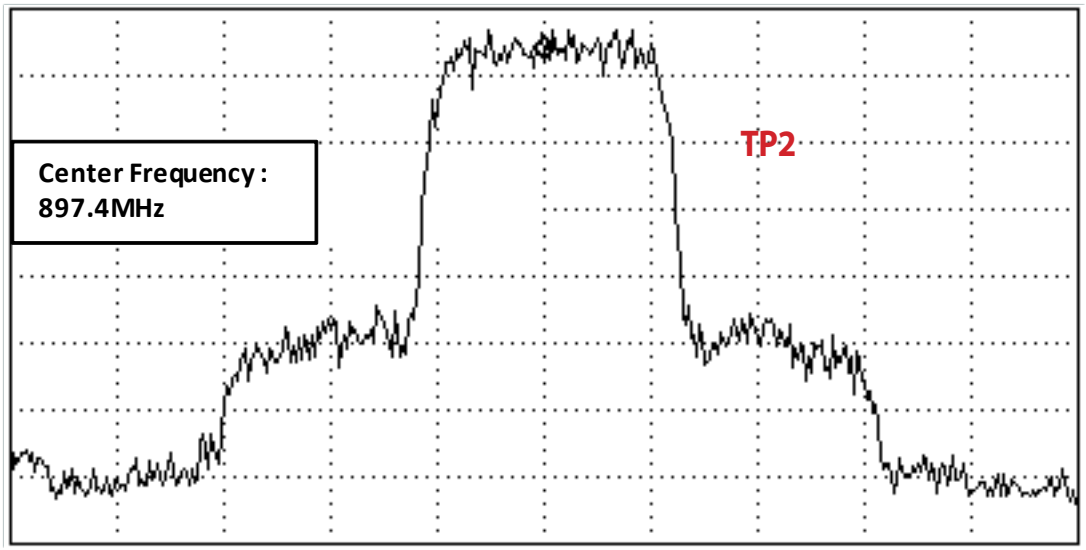

Figure 3.1.1 (c)

3.3 GSM Rx Part Troubleshooting

3.3.1 GSM850 Rx

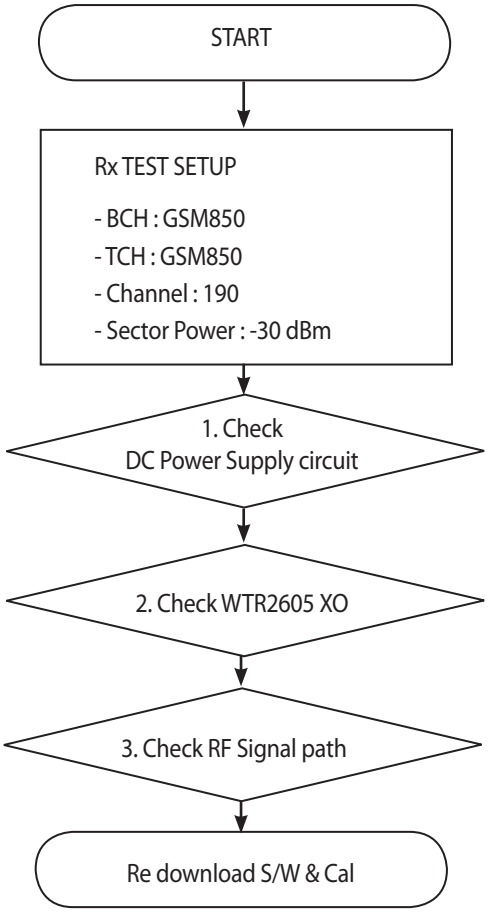

* There are no Test Points on the IQ Data Line. So It is impossible to check the IQ Data Wave form

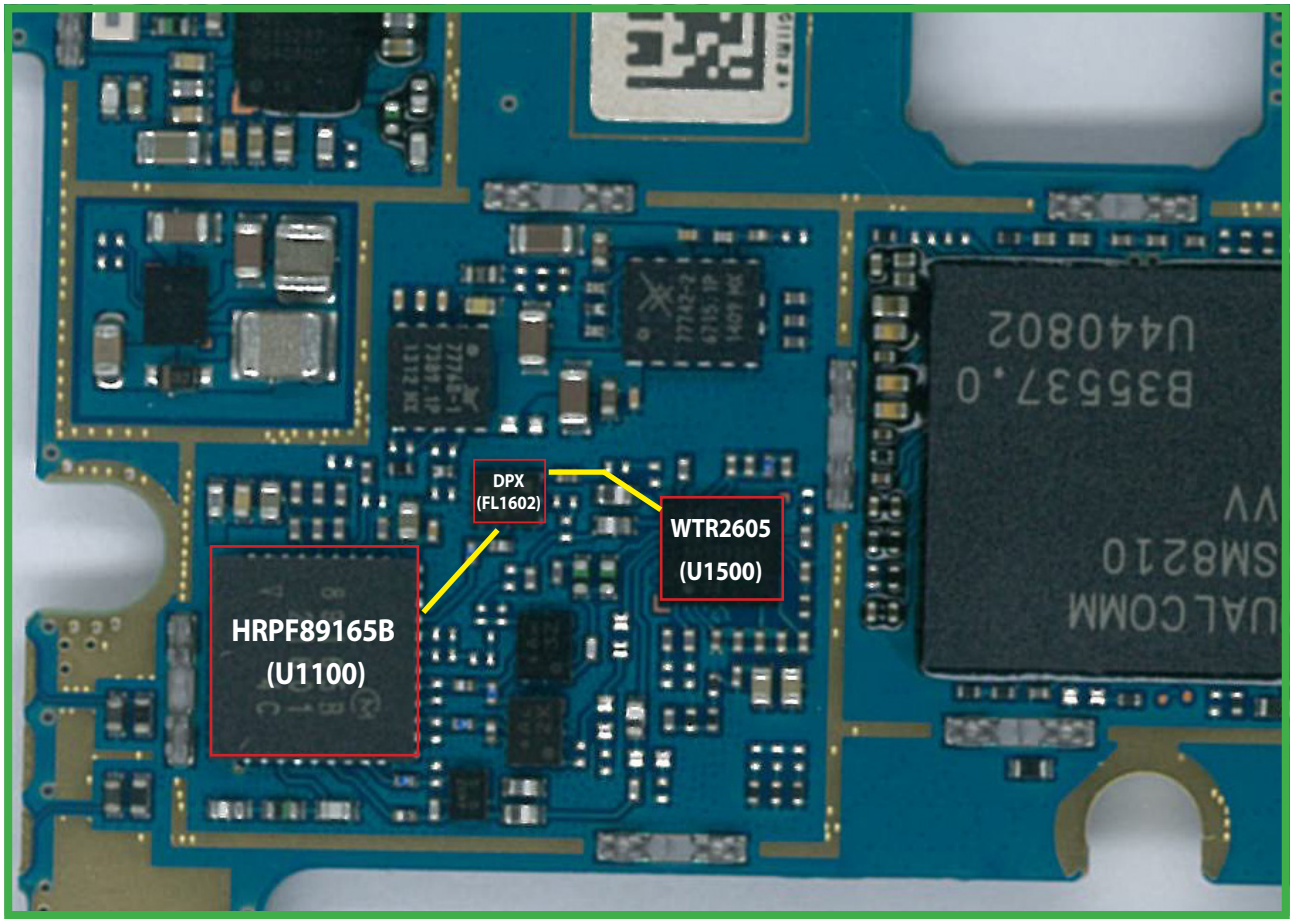

<Main Top>

3.3.1.1 Checking DC Power supply circuit

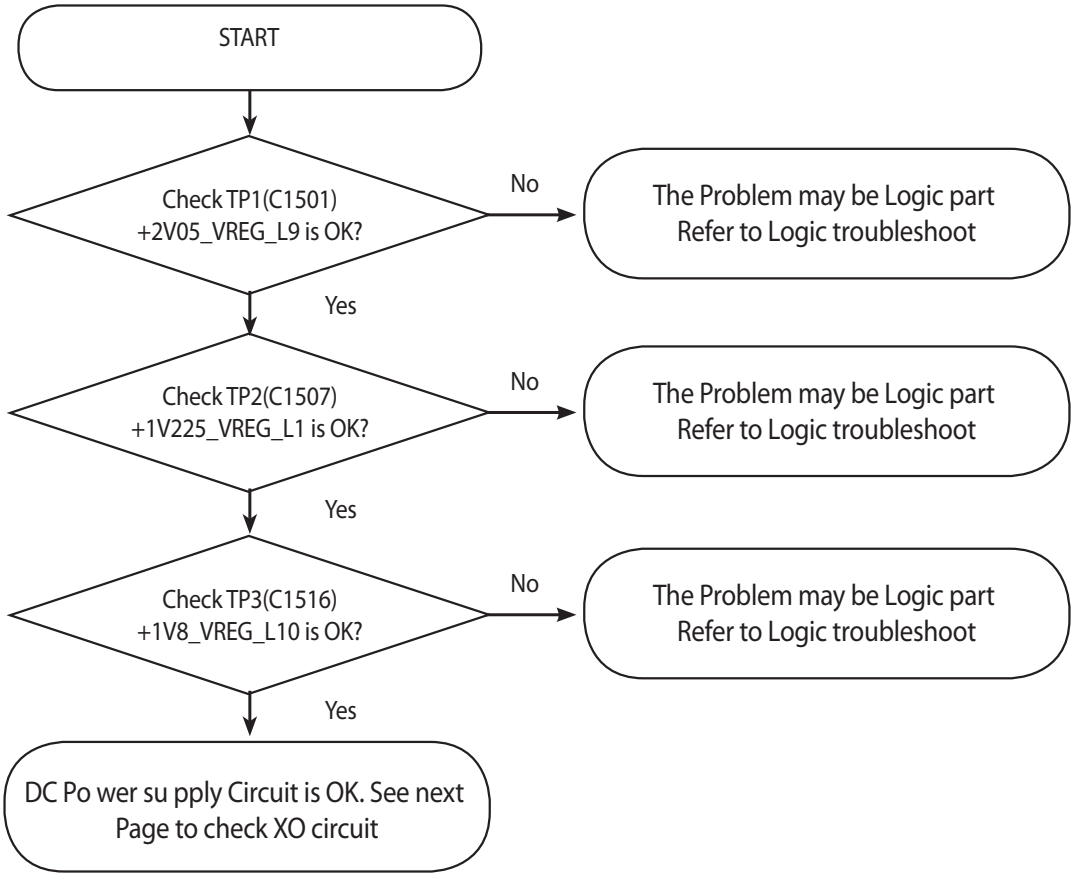

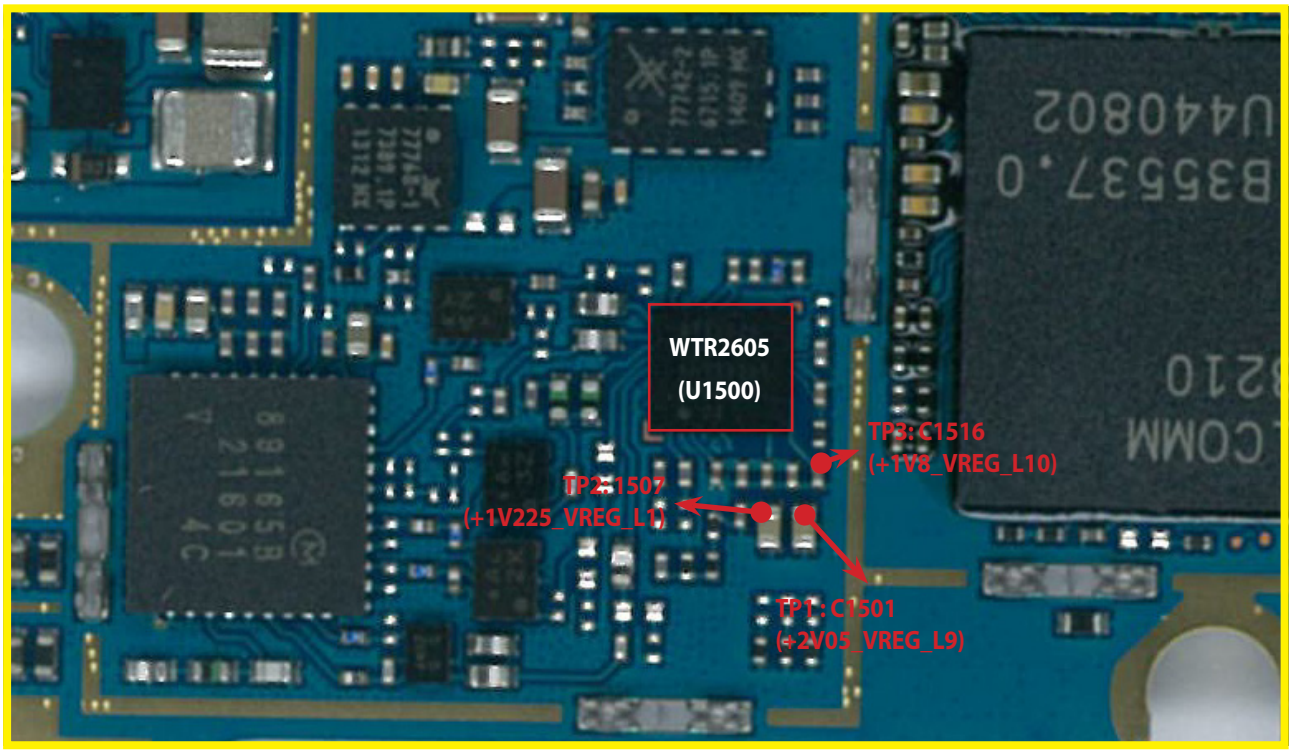

<Main Top>

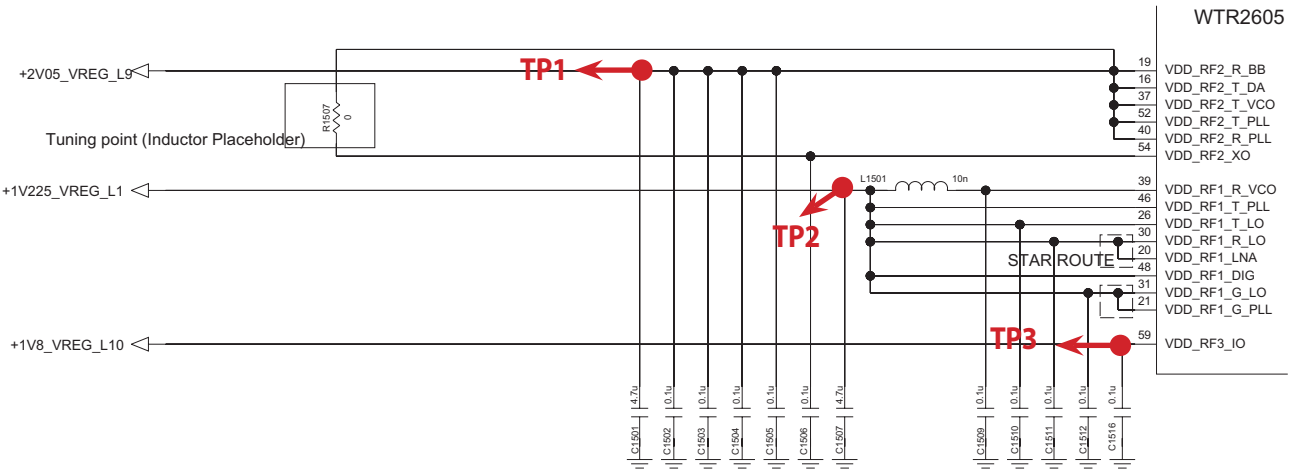

3.3.1.2 Checking WTR2605 XO circuit

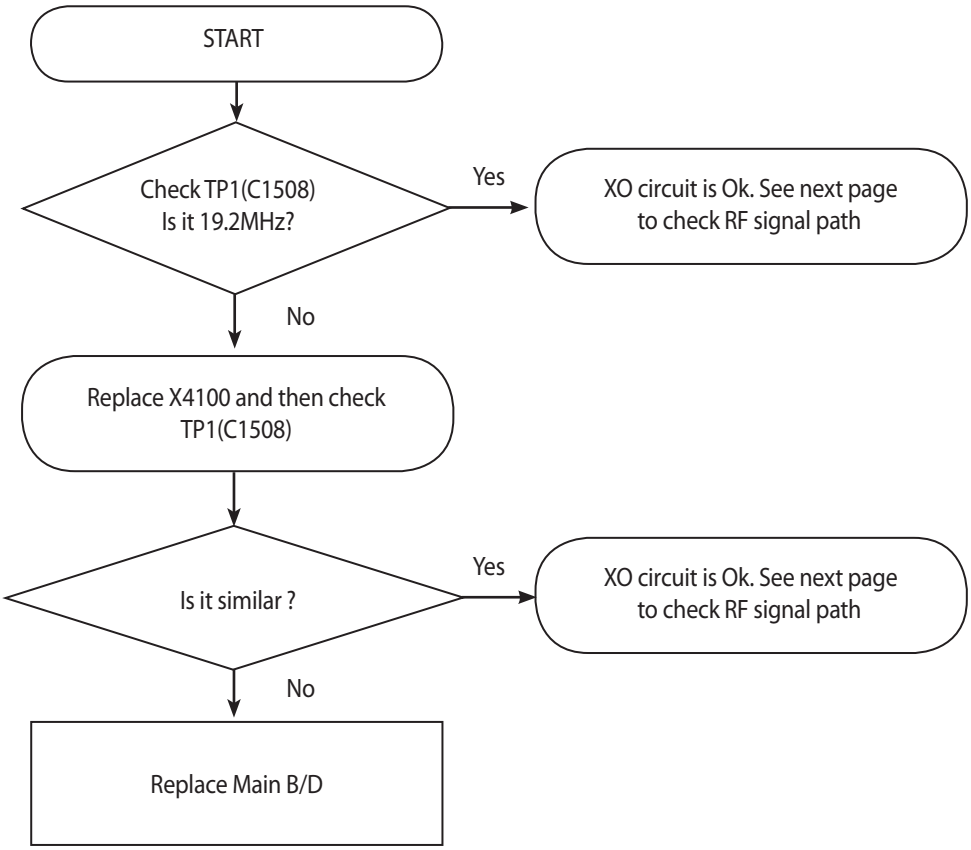

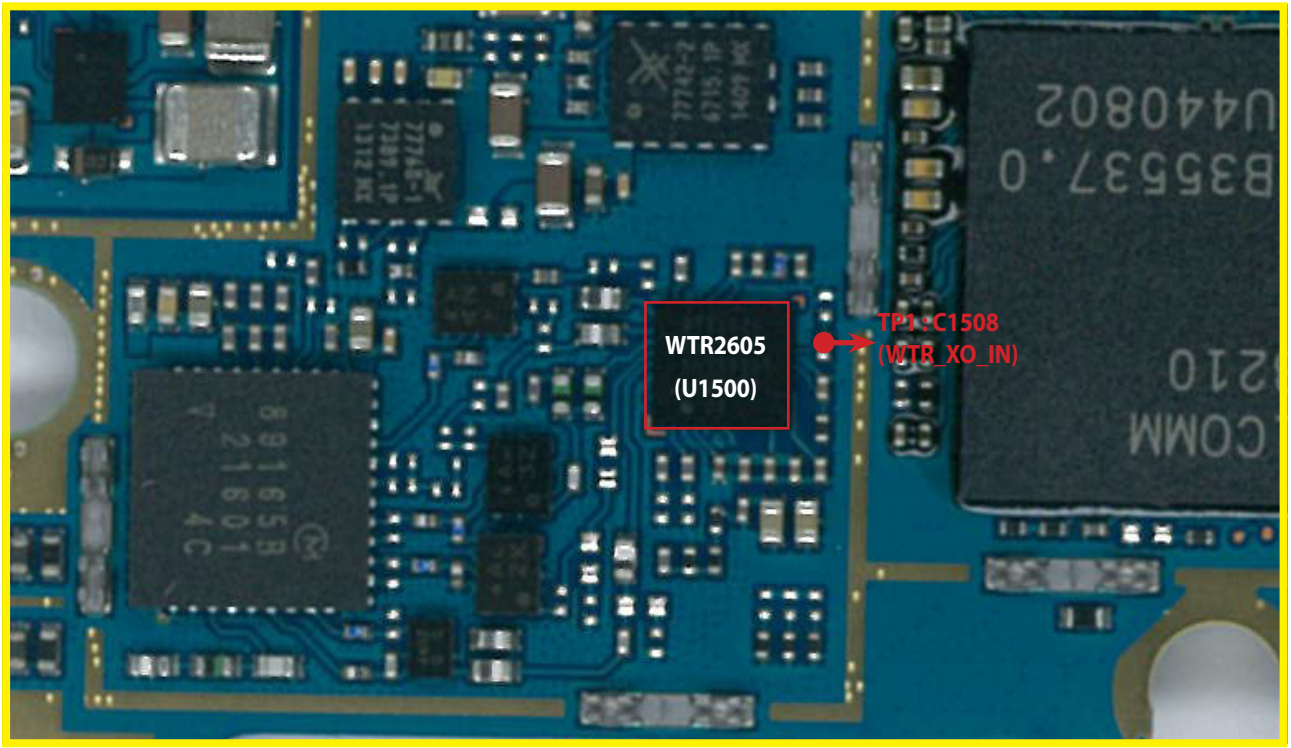

<Main Top>

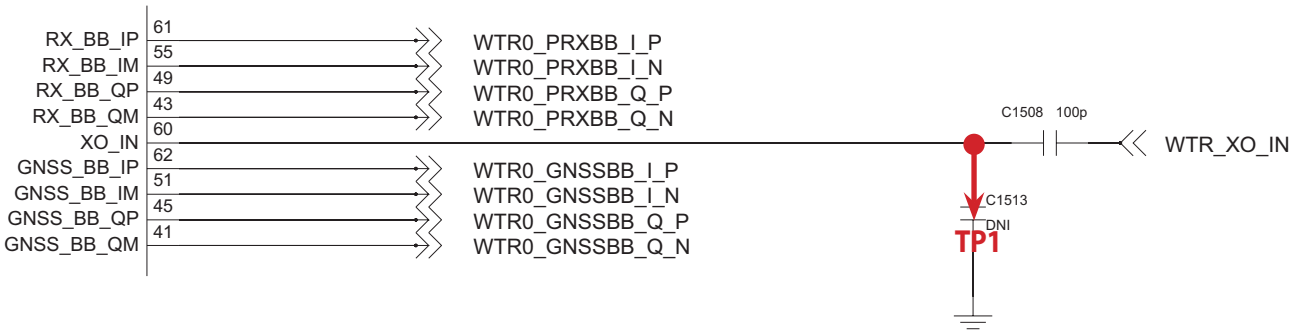

3.3.1.3 Checking RF Signal Path (Tx Module)

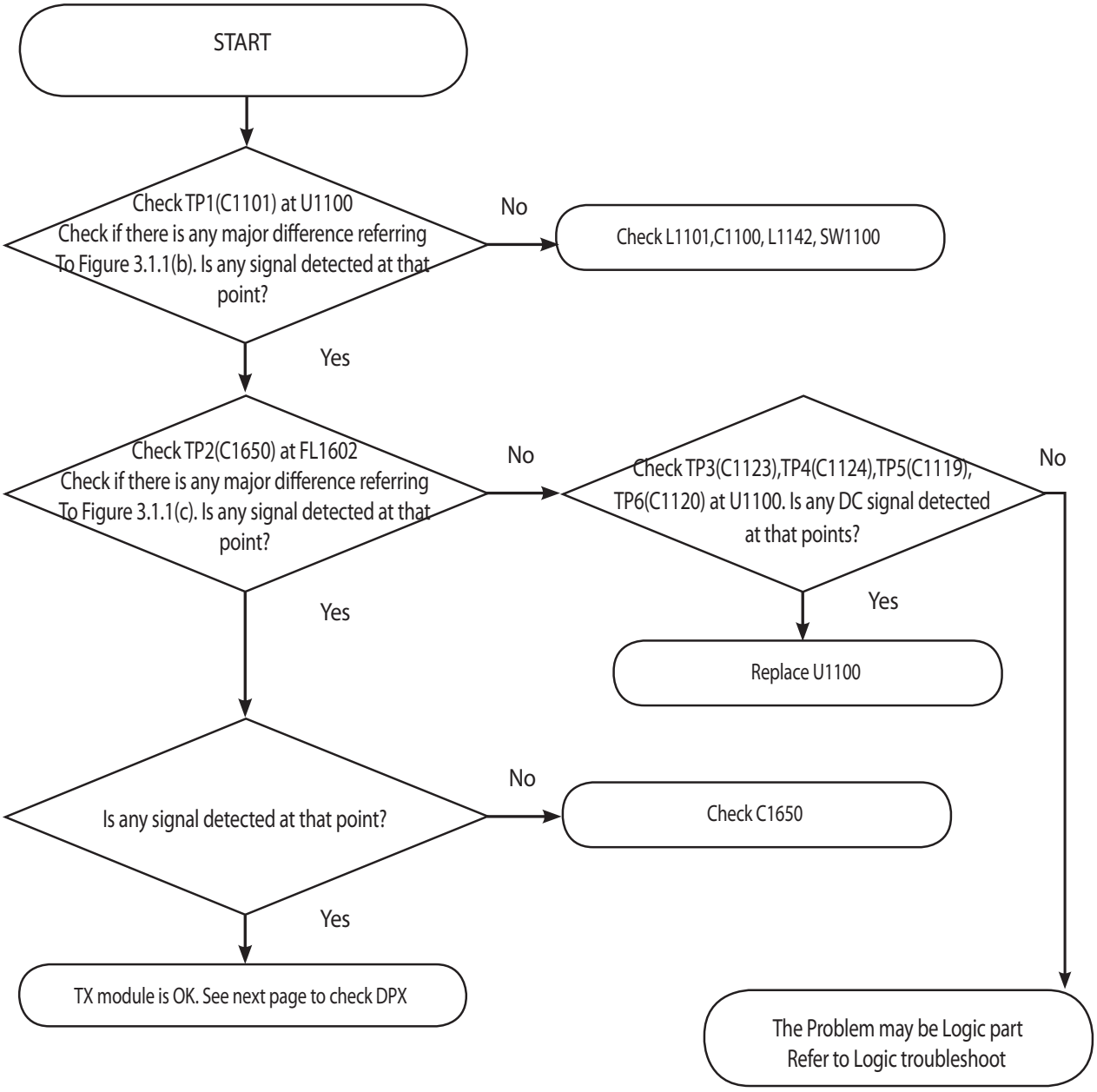

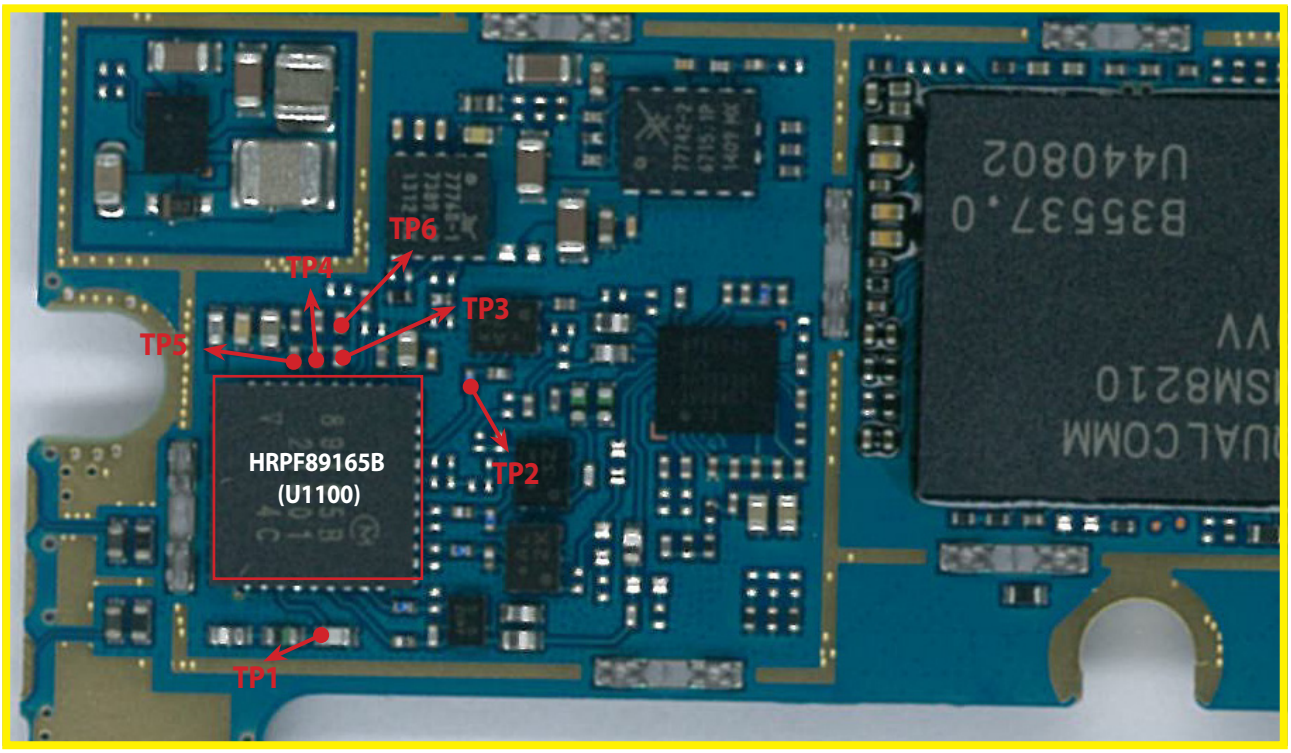

<Main Top>

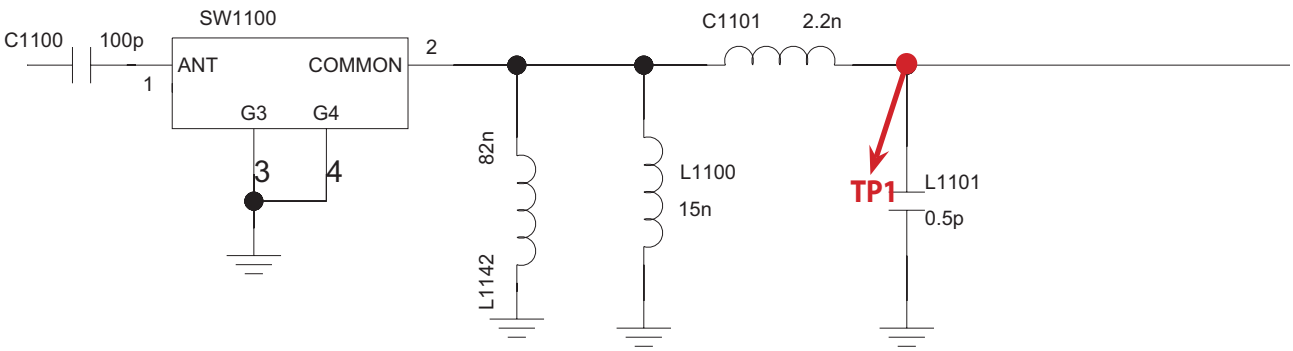

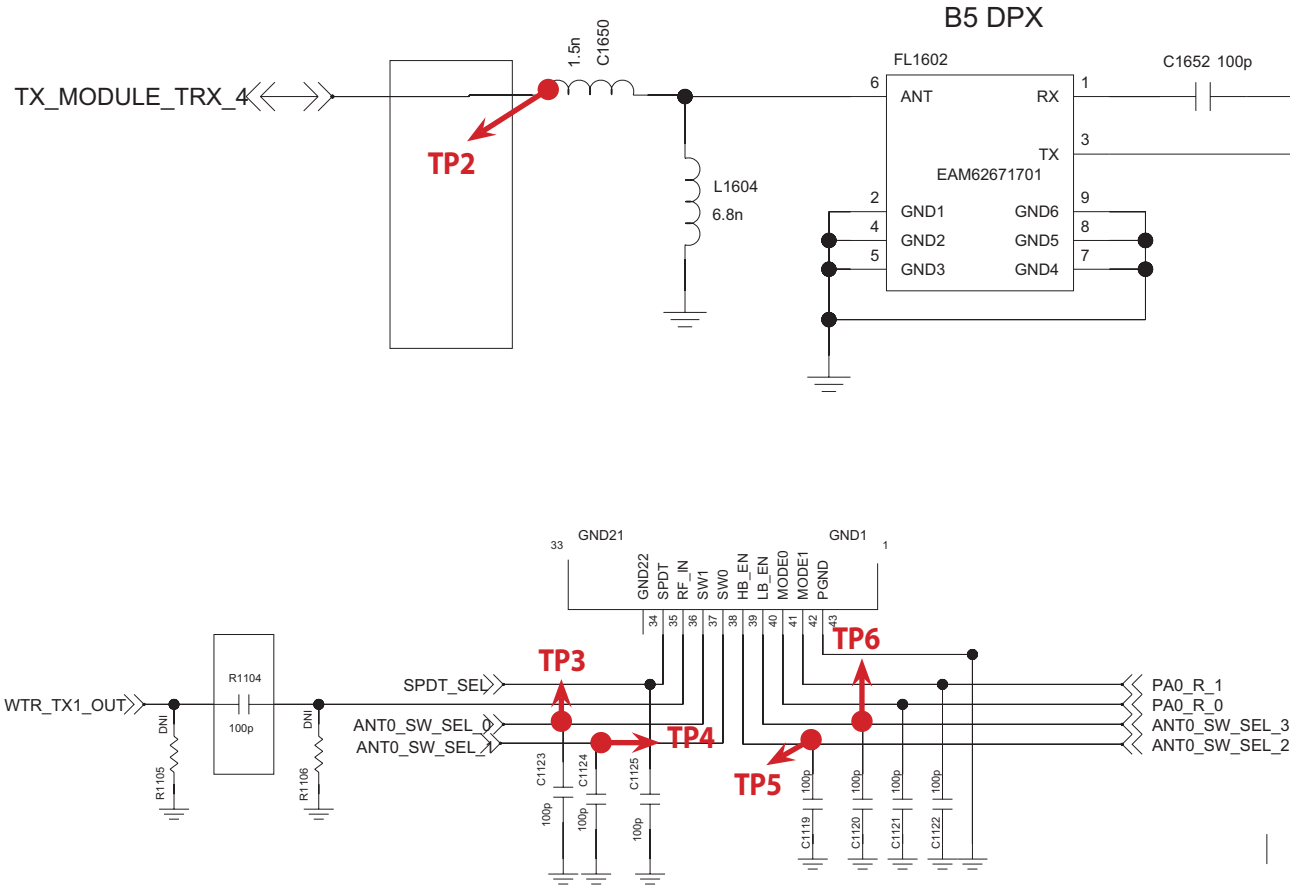

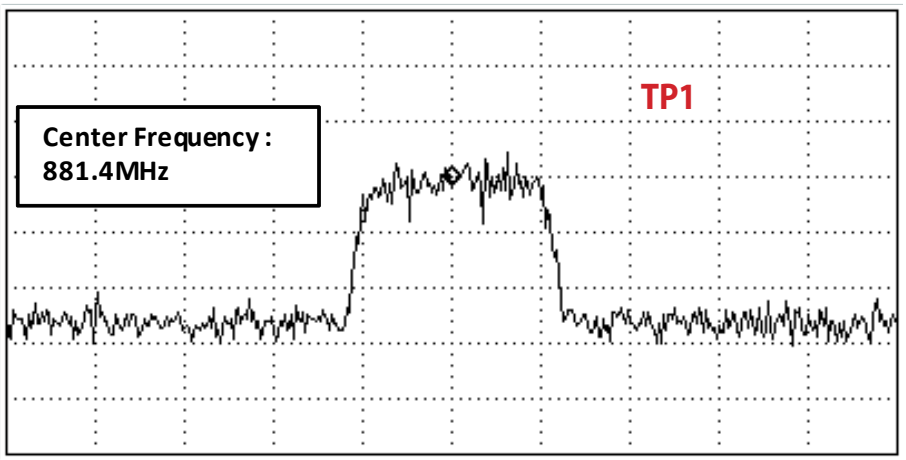

Figure 3.1.1 (b)

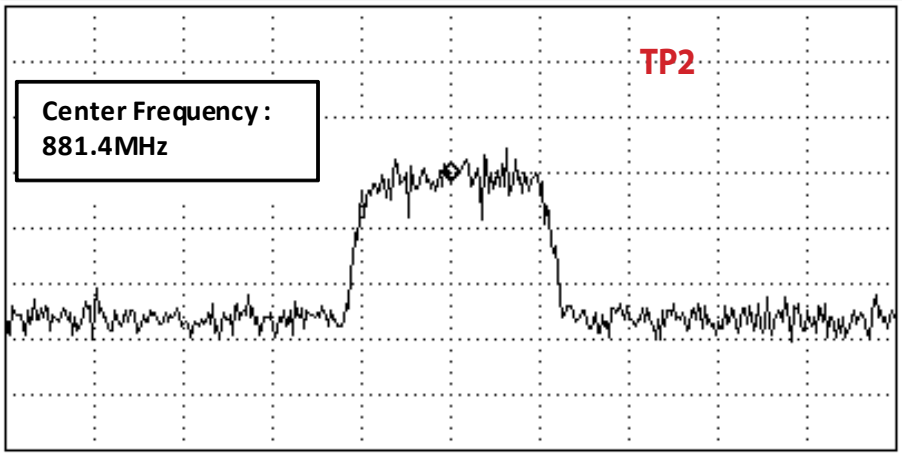

Figure 3.1.1 (c)

3.3.1.4 Checking RF Signal Path (Duplexer)

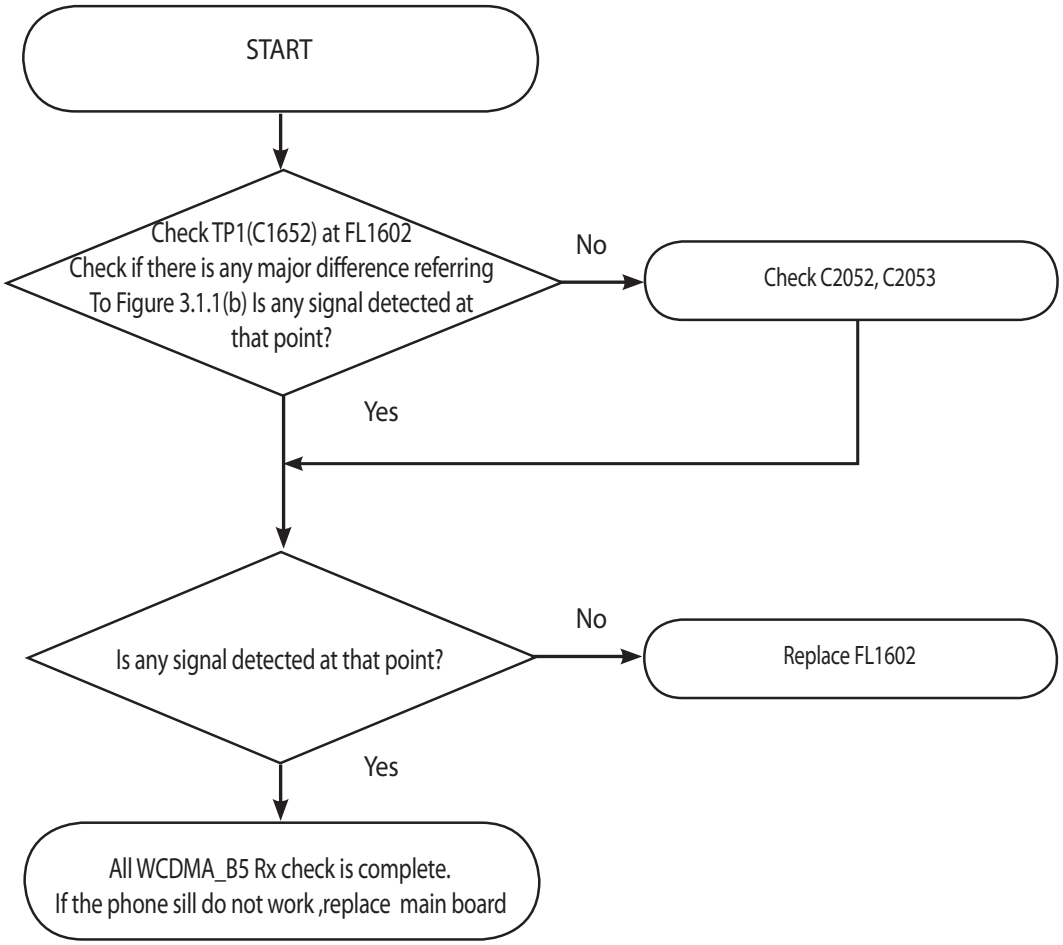

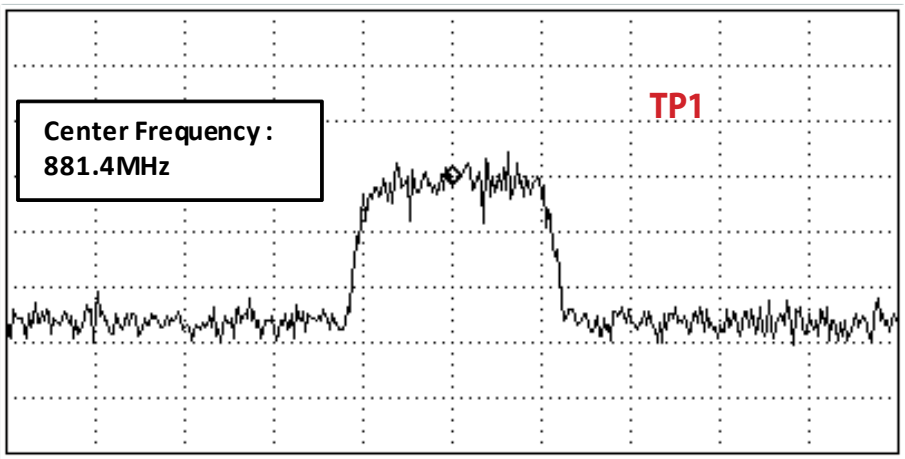

Figure 3.1.1 (b)

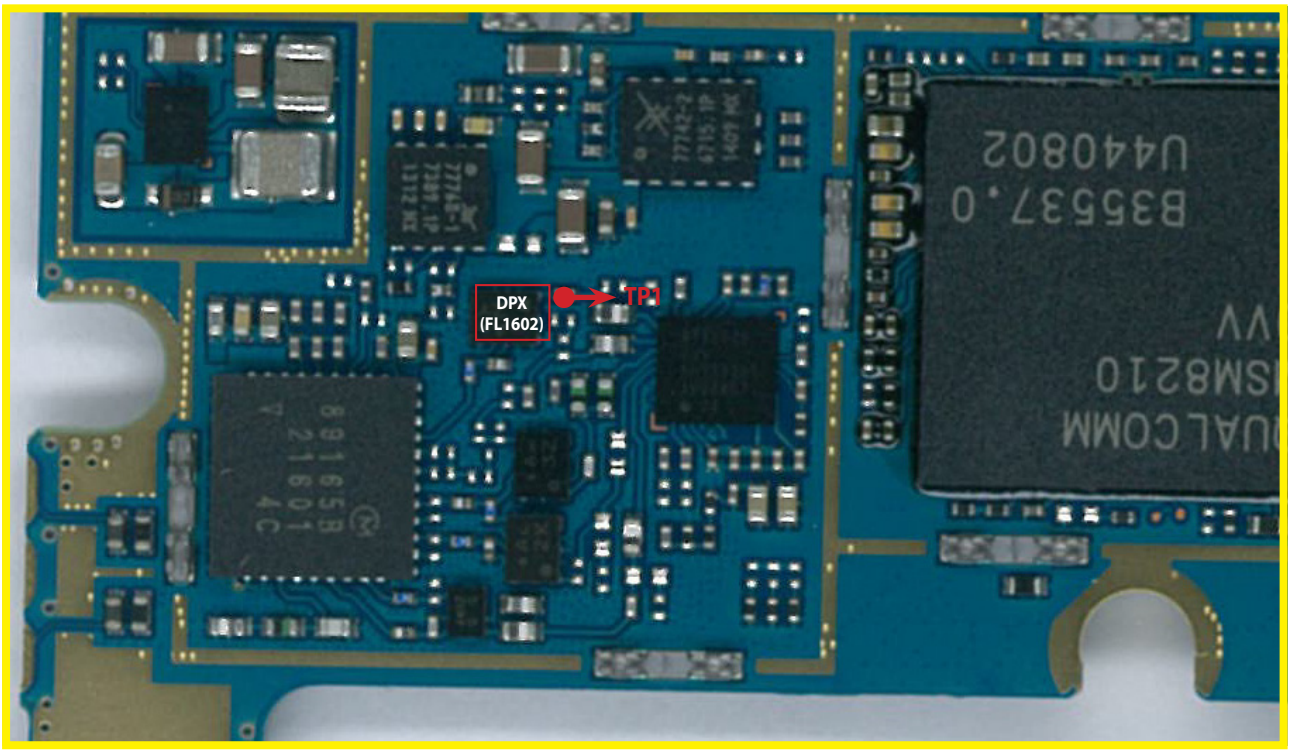

<Main Top>

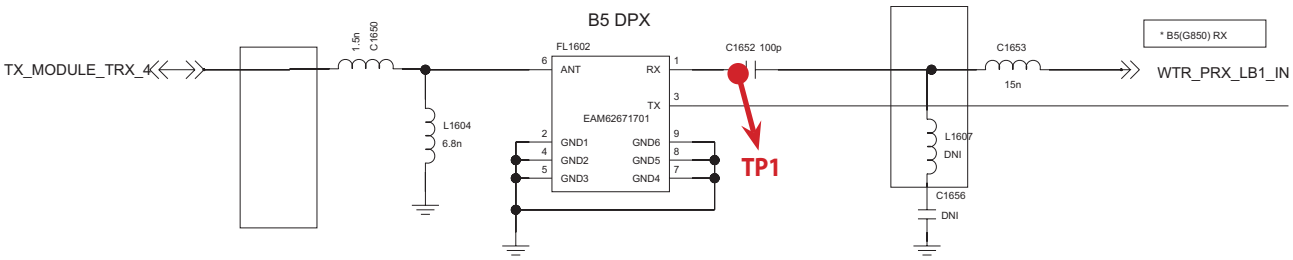

3.3.2 GSM900 Rx

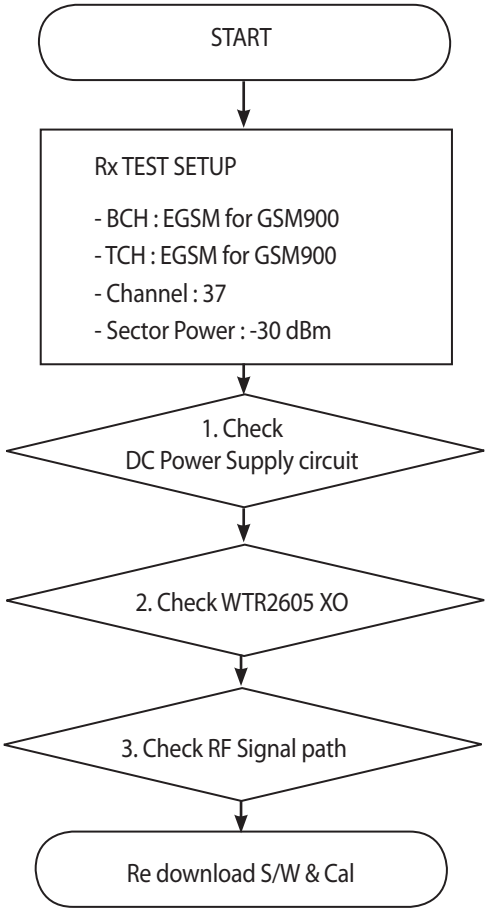

* There are no Test Points on the IQ Data Line. So It is impossible to check the IQ Data Wave form

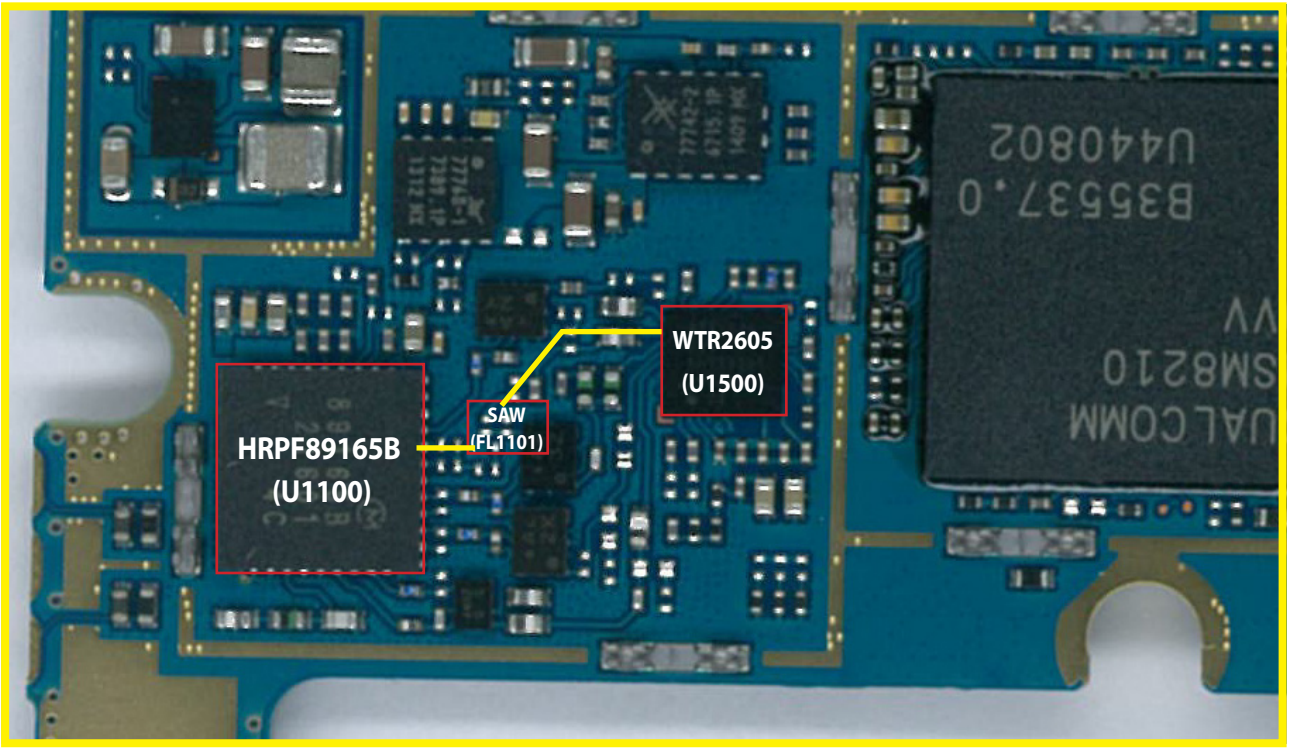

<Main Top>

3.3.2.1 Checking DC Power supply circuit

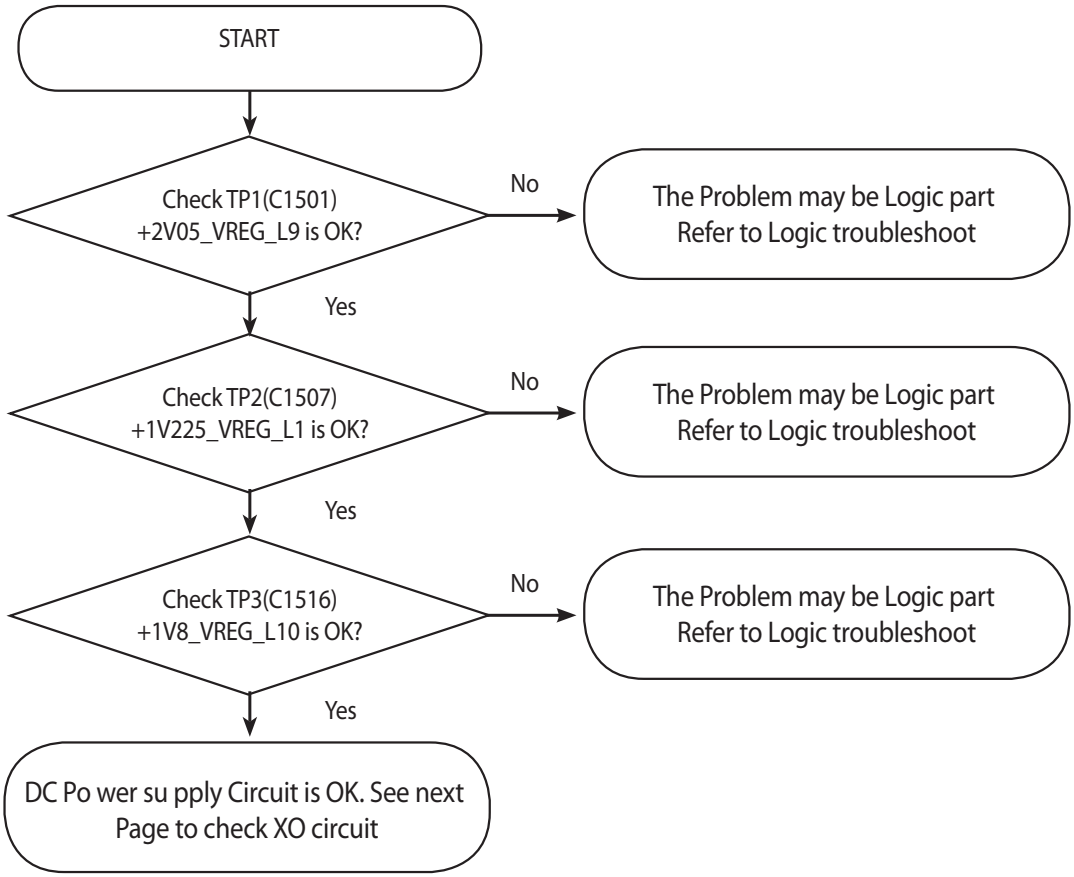

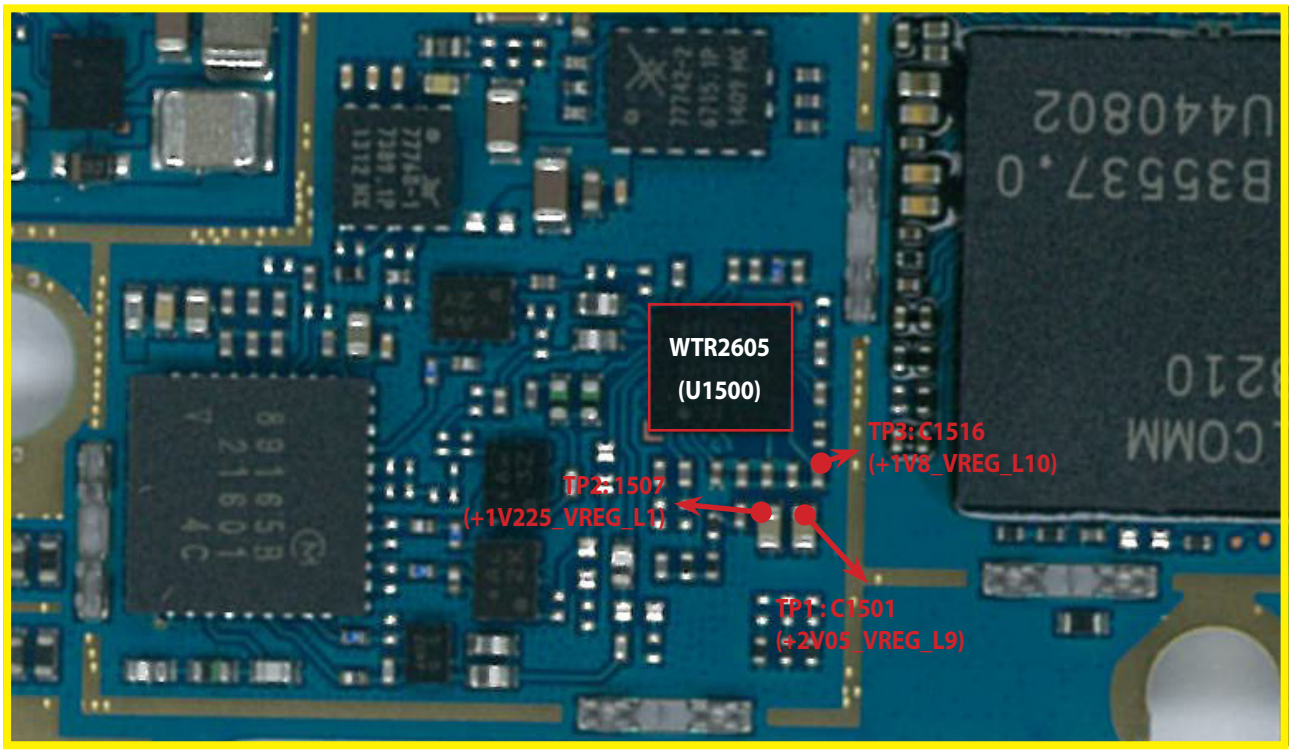

<Main Top>

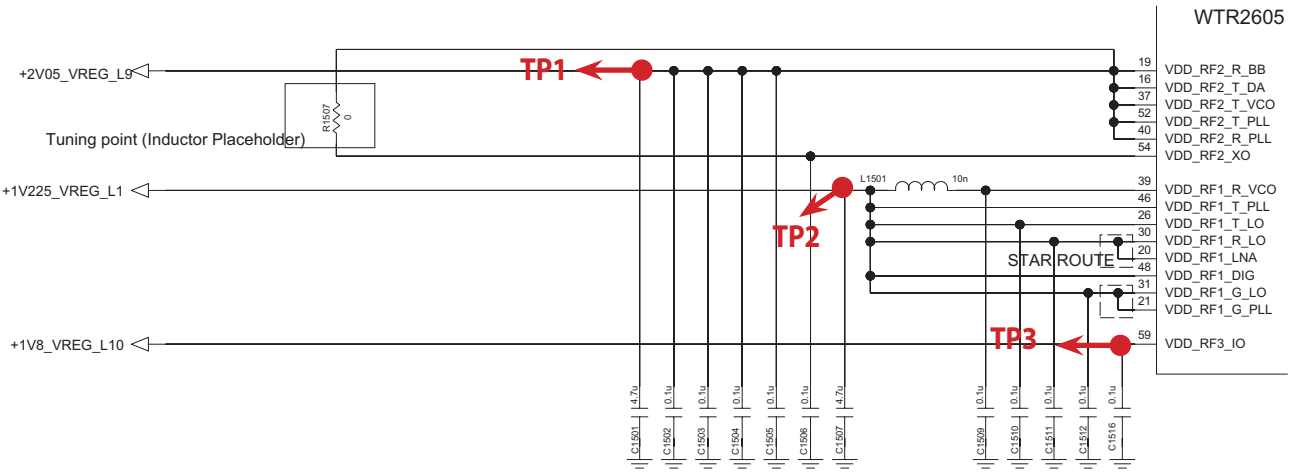

3.3.2.2 Checking WTR2605 XO circuit

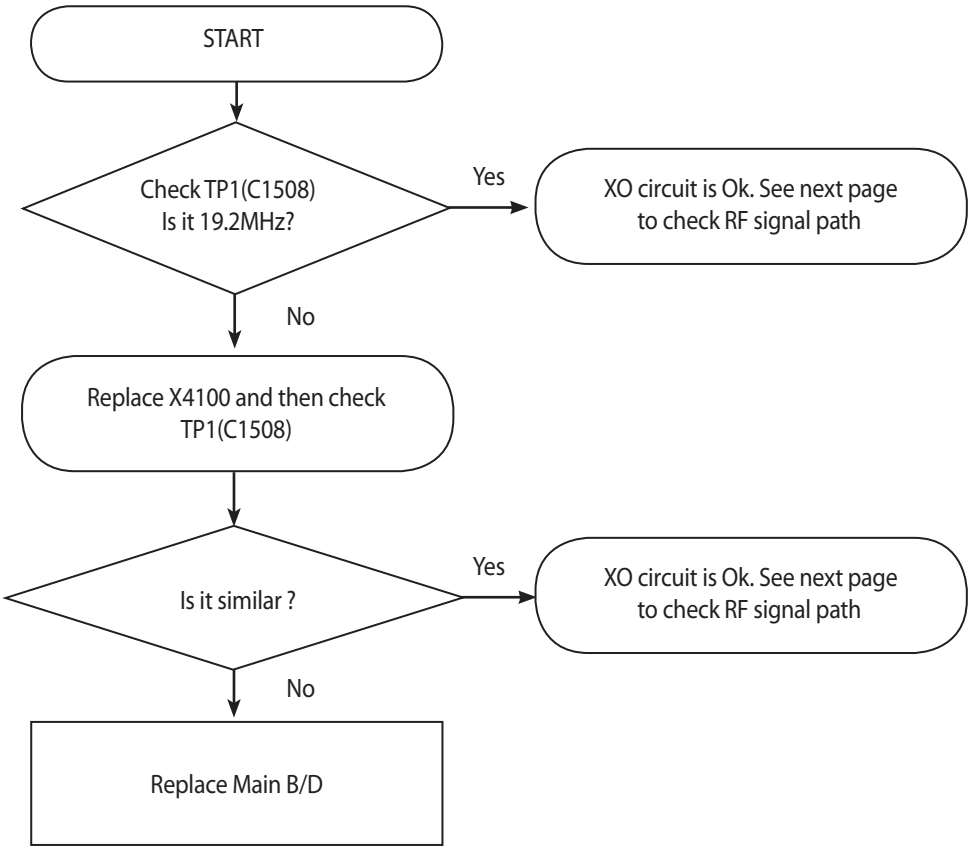

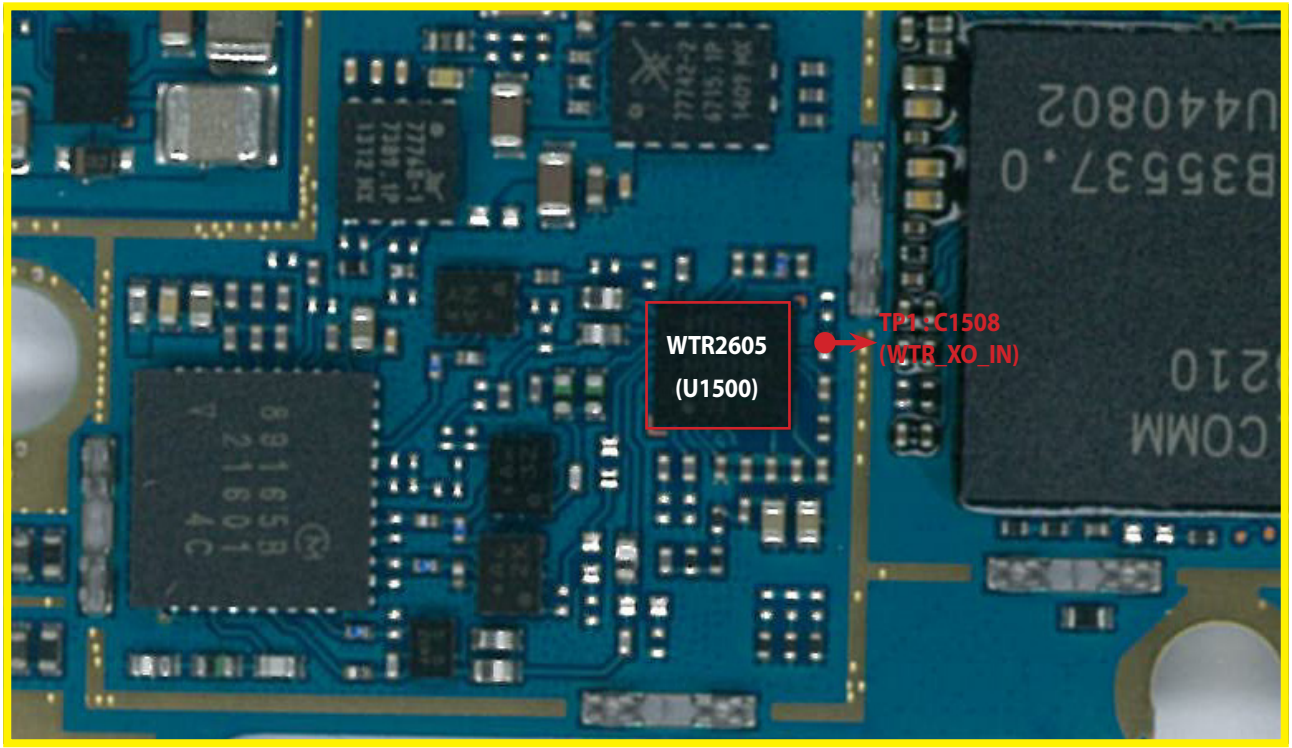

<Main Top>

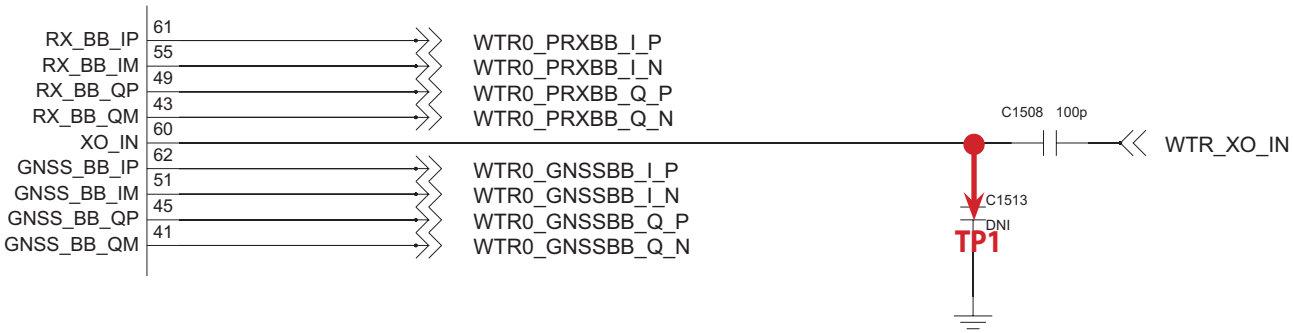

3.3.2.3 Checking RF Signal Path (Tx Module)

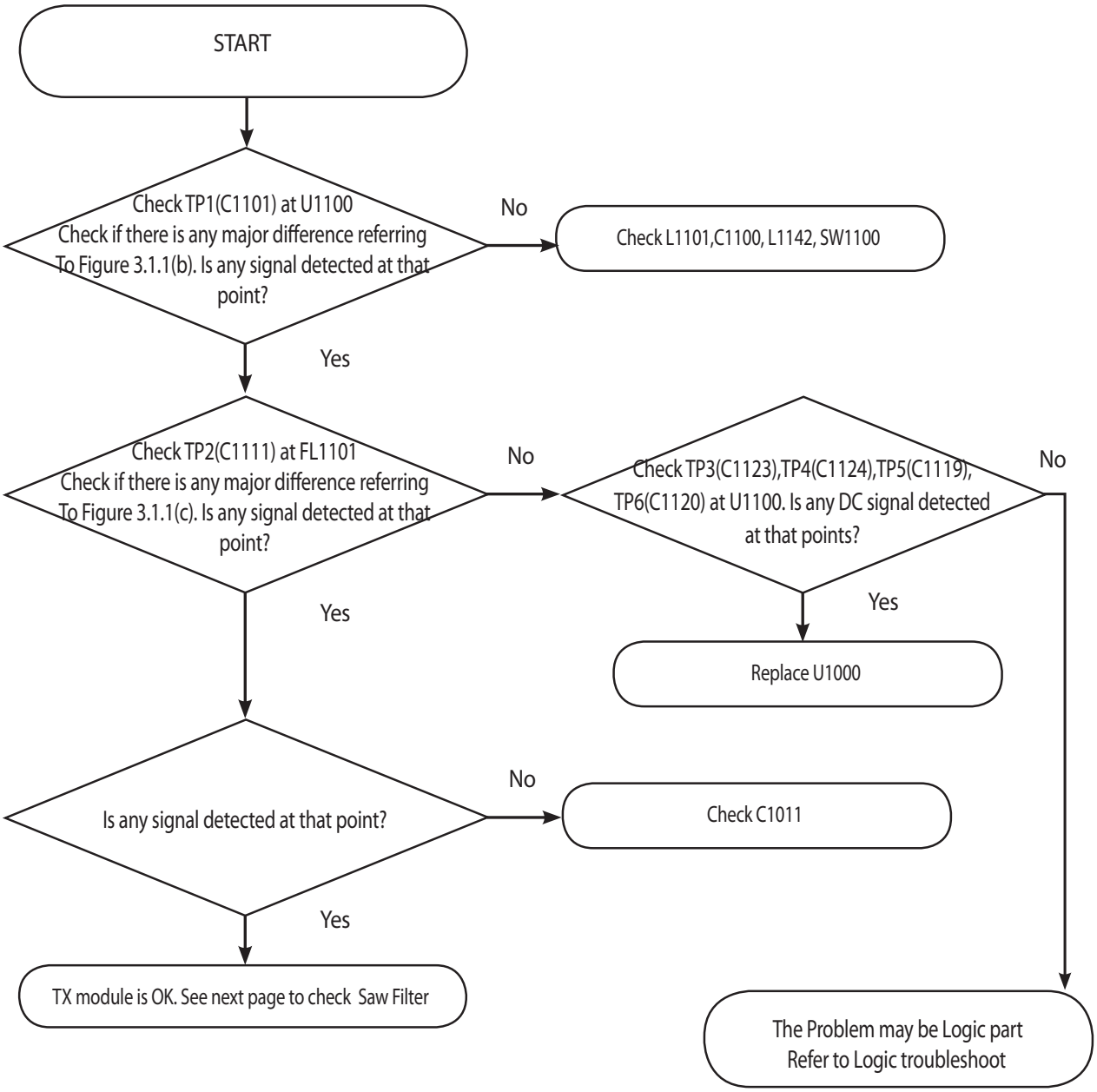

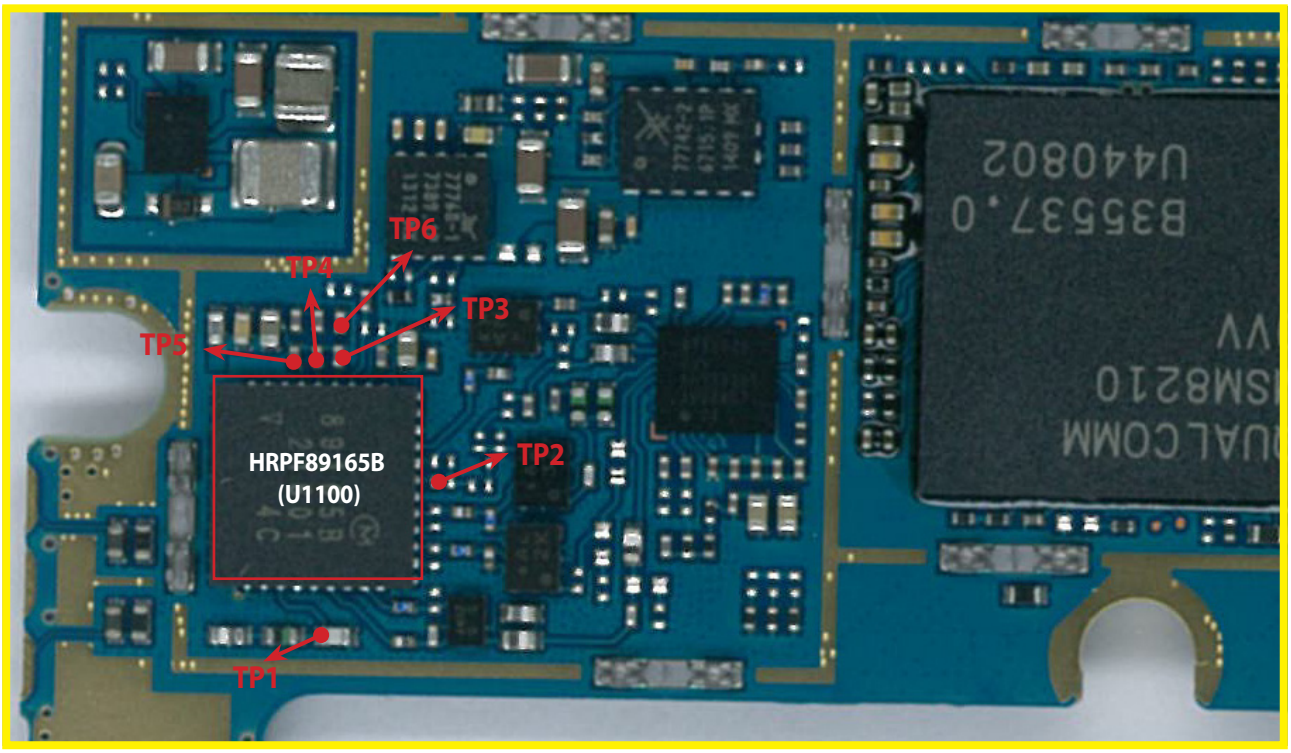

<Main Top>

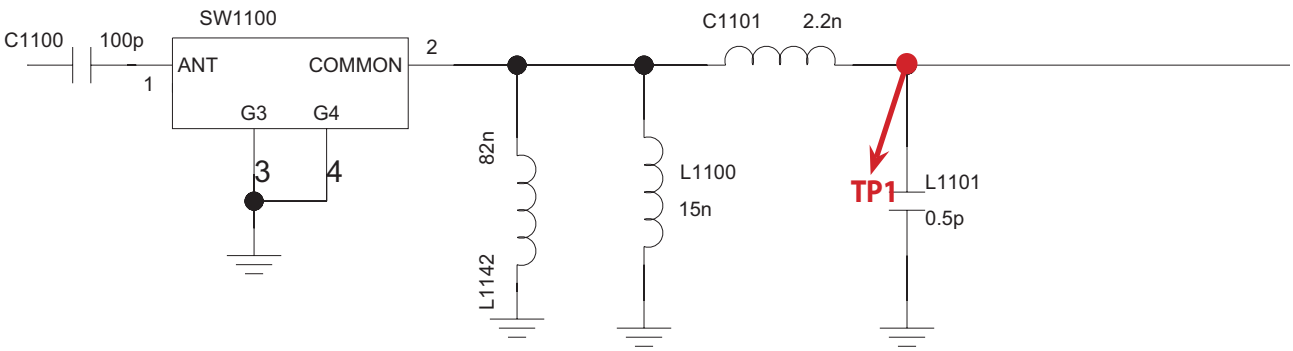

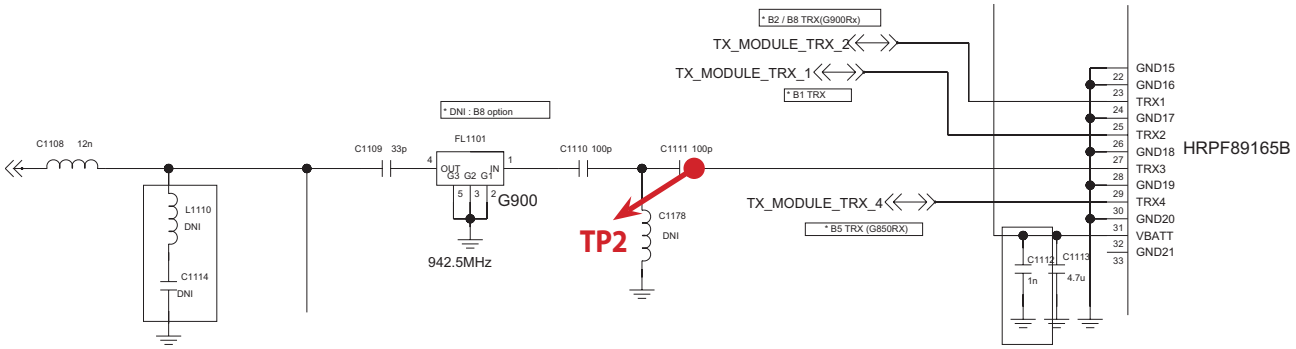

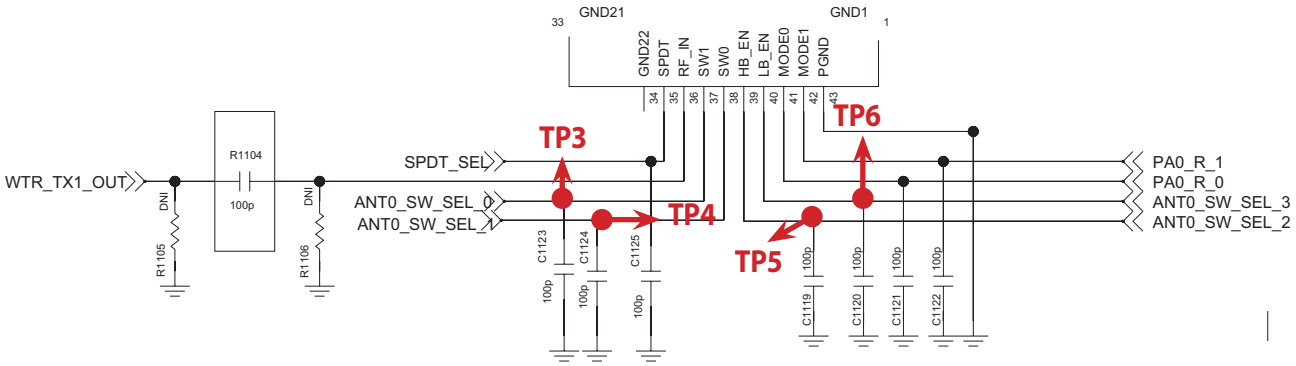

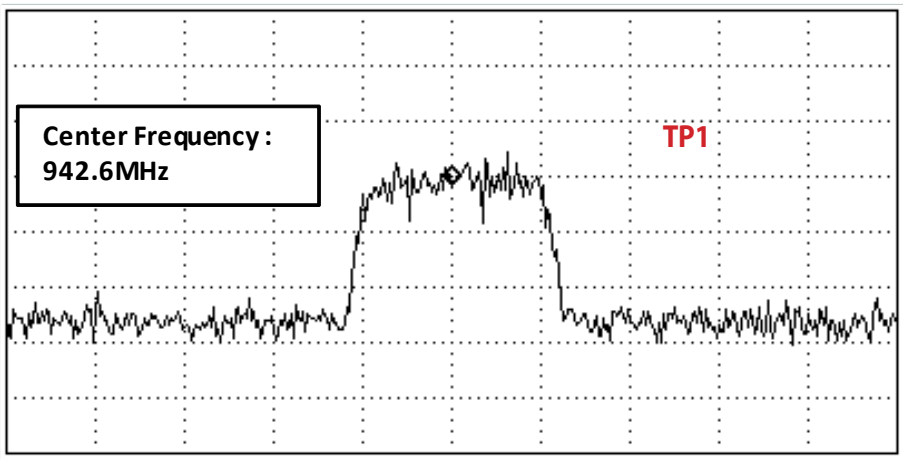

Figure 3.1.1 (b)

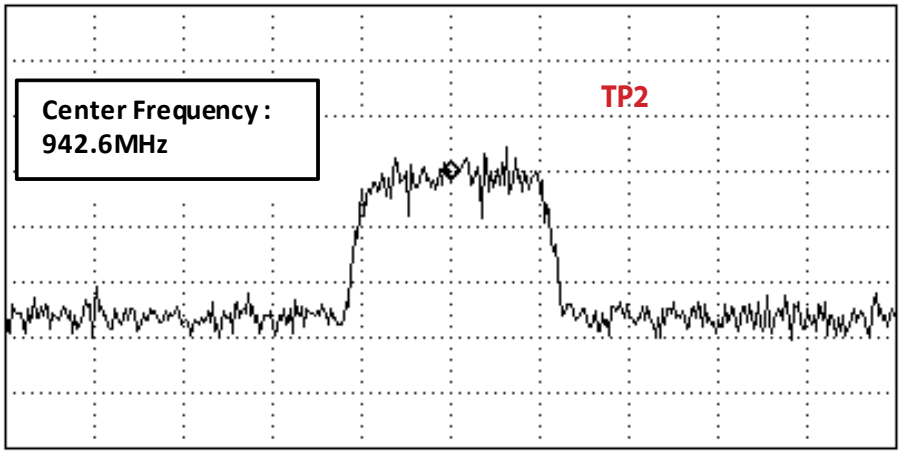

Figure 3.1.1 (c)

3.3.2.4 Checking RF Signal Path (Saw Filter)

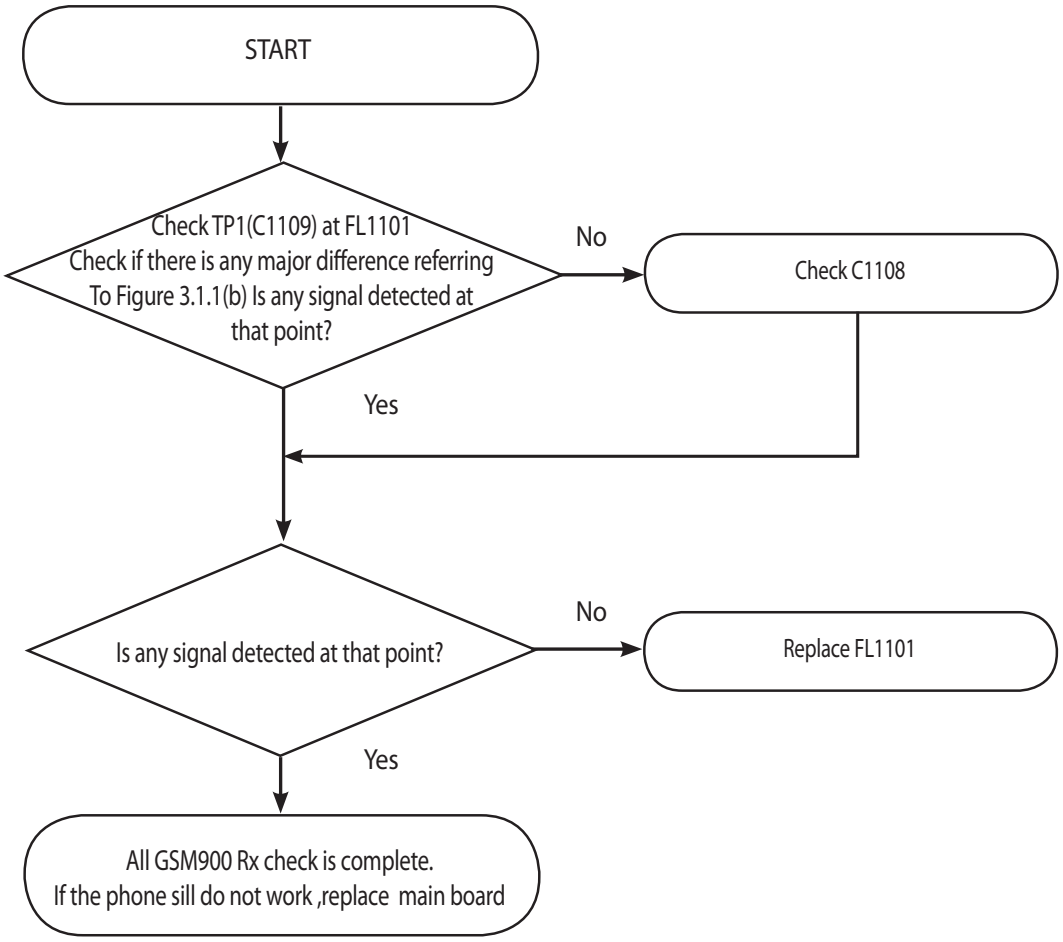

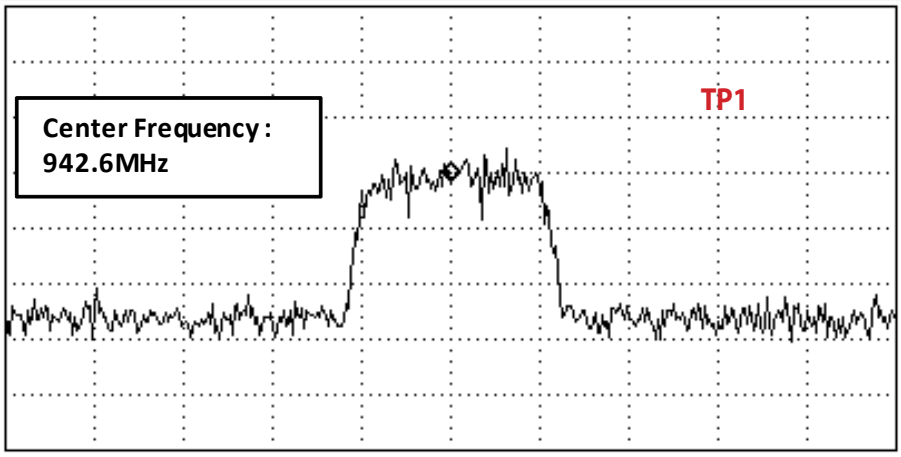

Figure 3.1.1 (b)

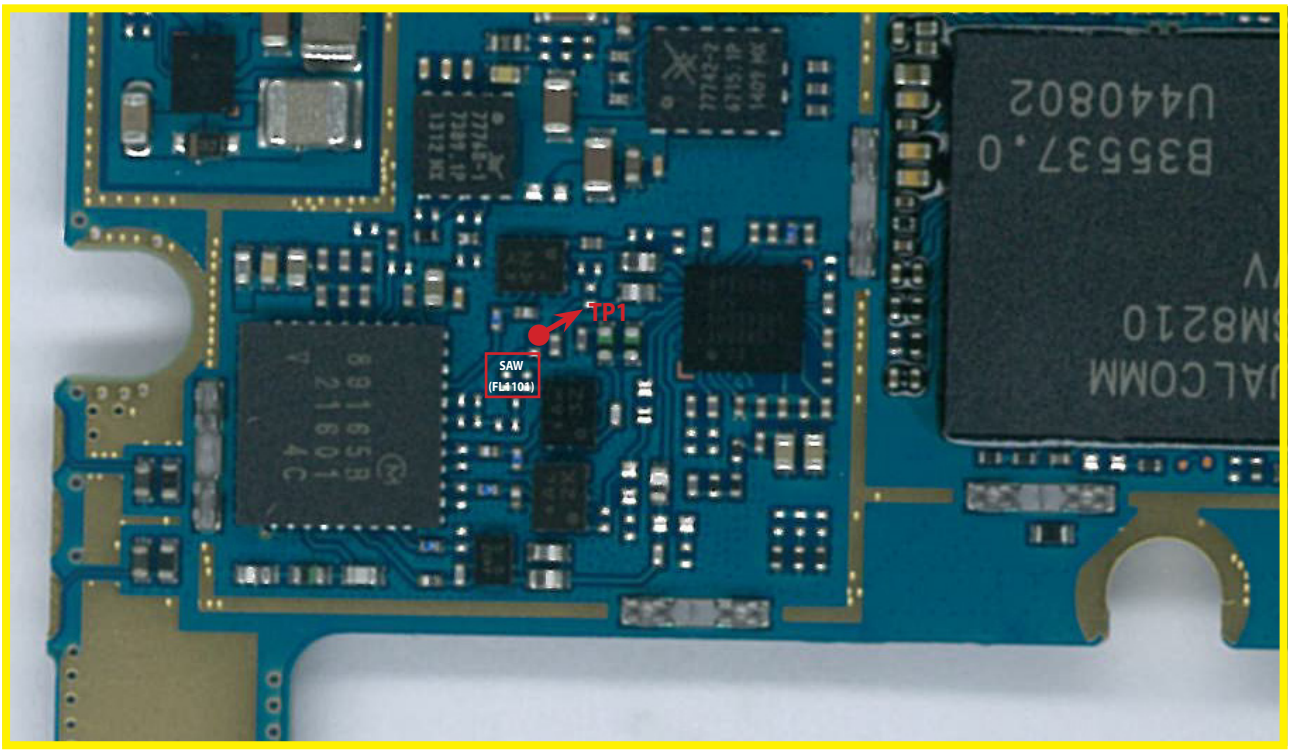

<Main Top>

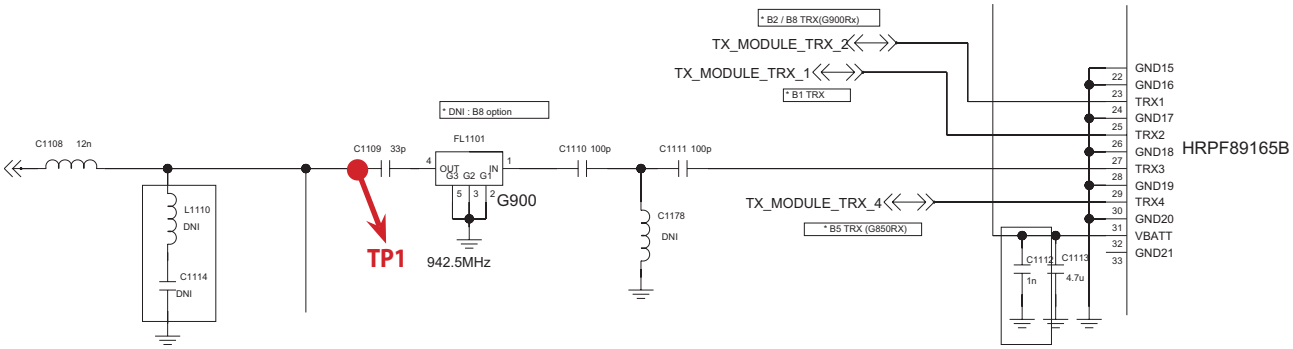

3.3.3 GSM1800/1900 Rx

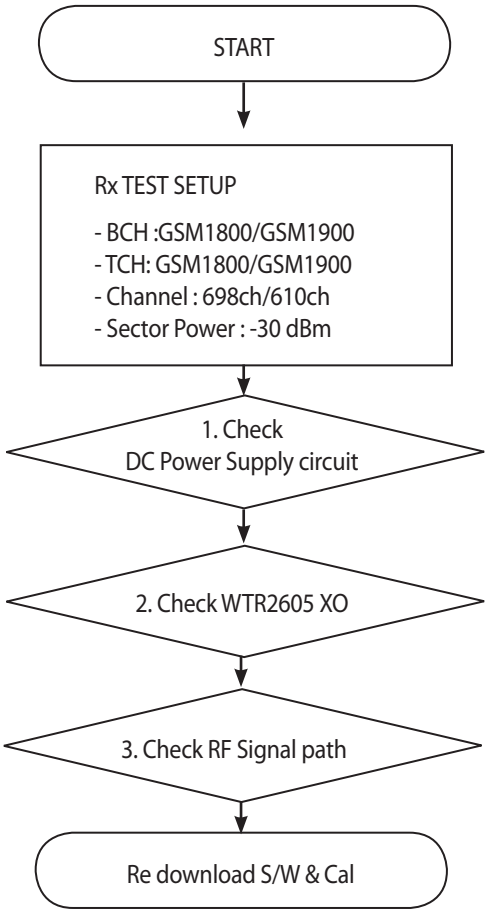

* There are no Test Points on the IQ Data Line. So It is impossible to check the IQ Data Wave form

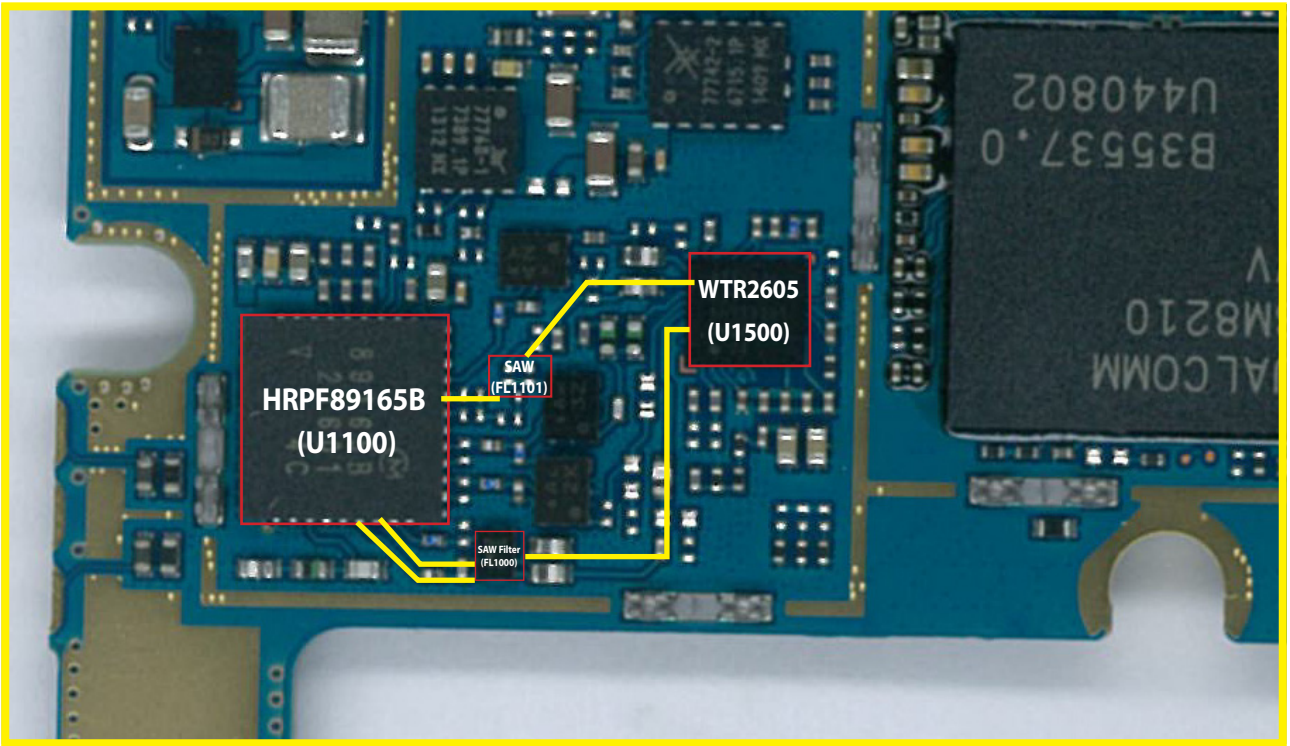

<Main Top>

3.3.3.1 Checking DC Power supply circuit

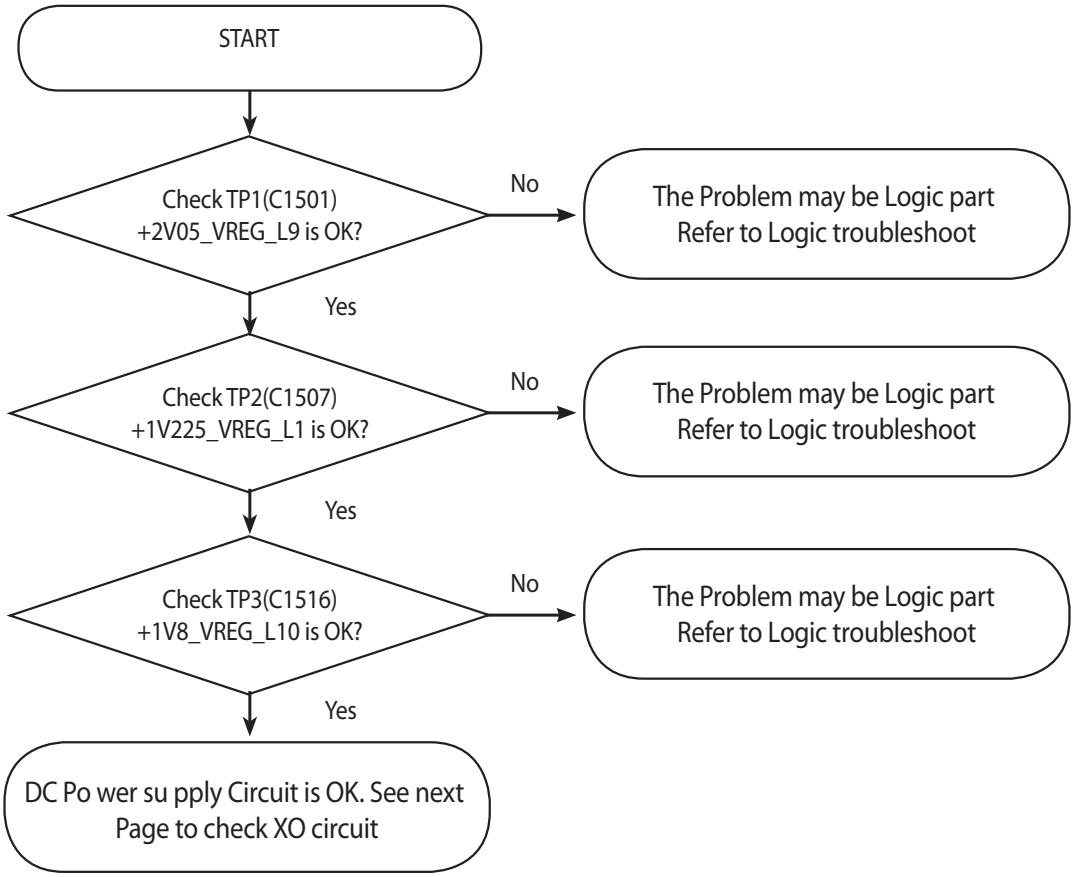

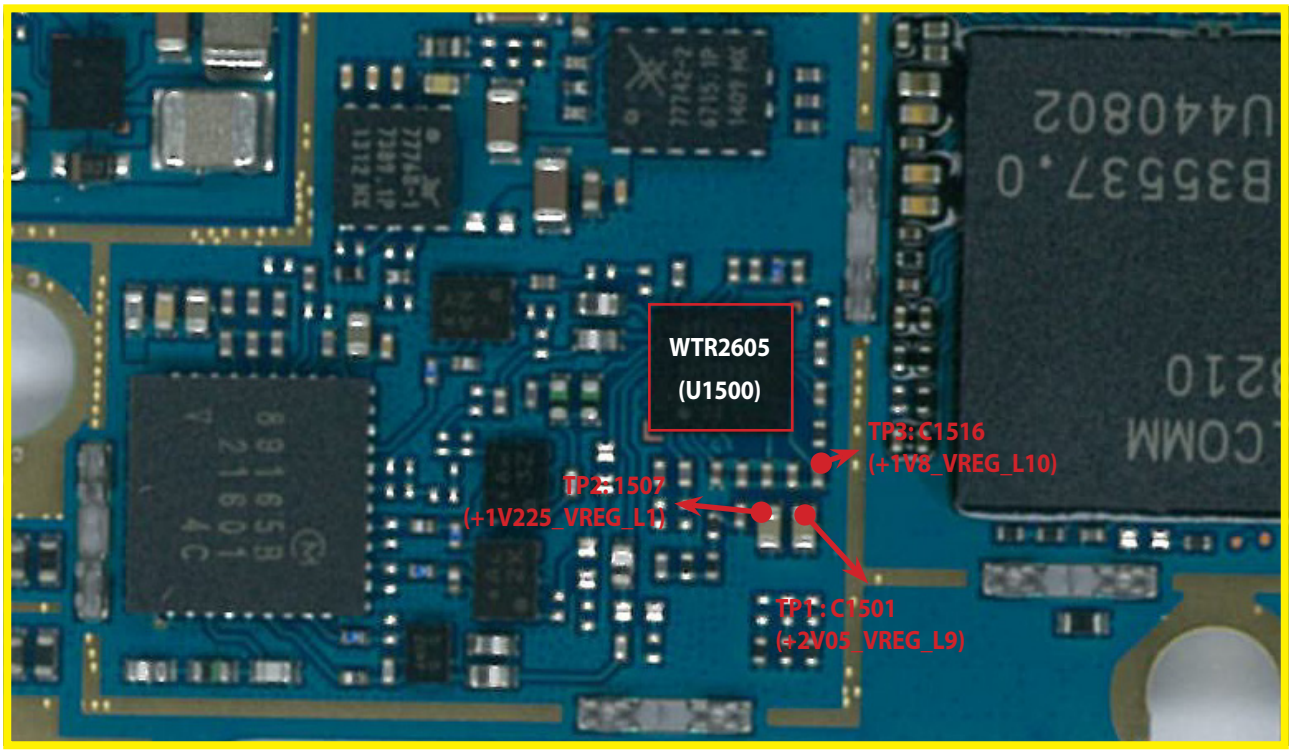

<Main Top>

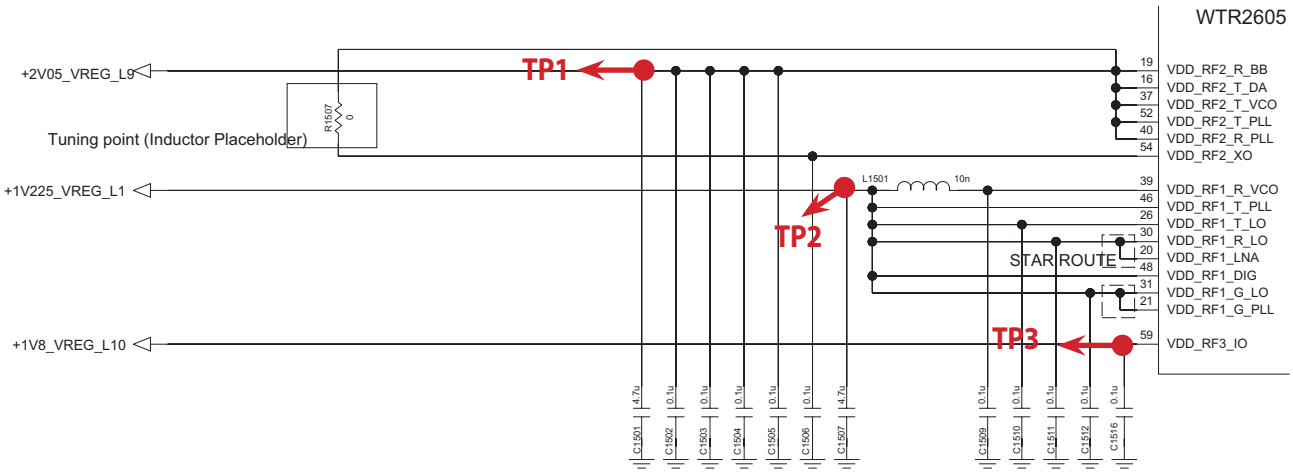

3.3.3.2 Checking WTR2605 XO circuit

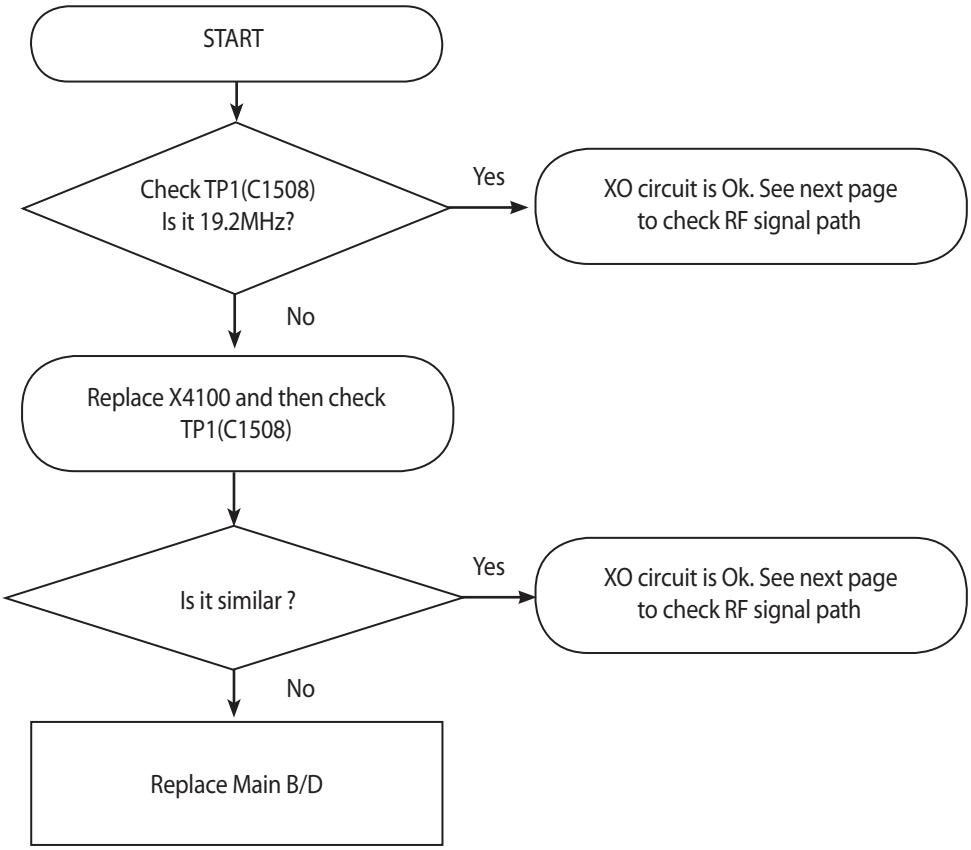

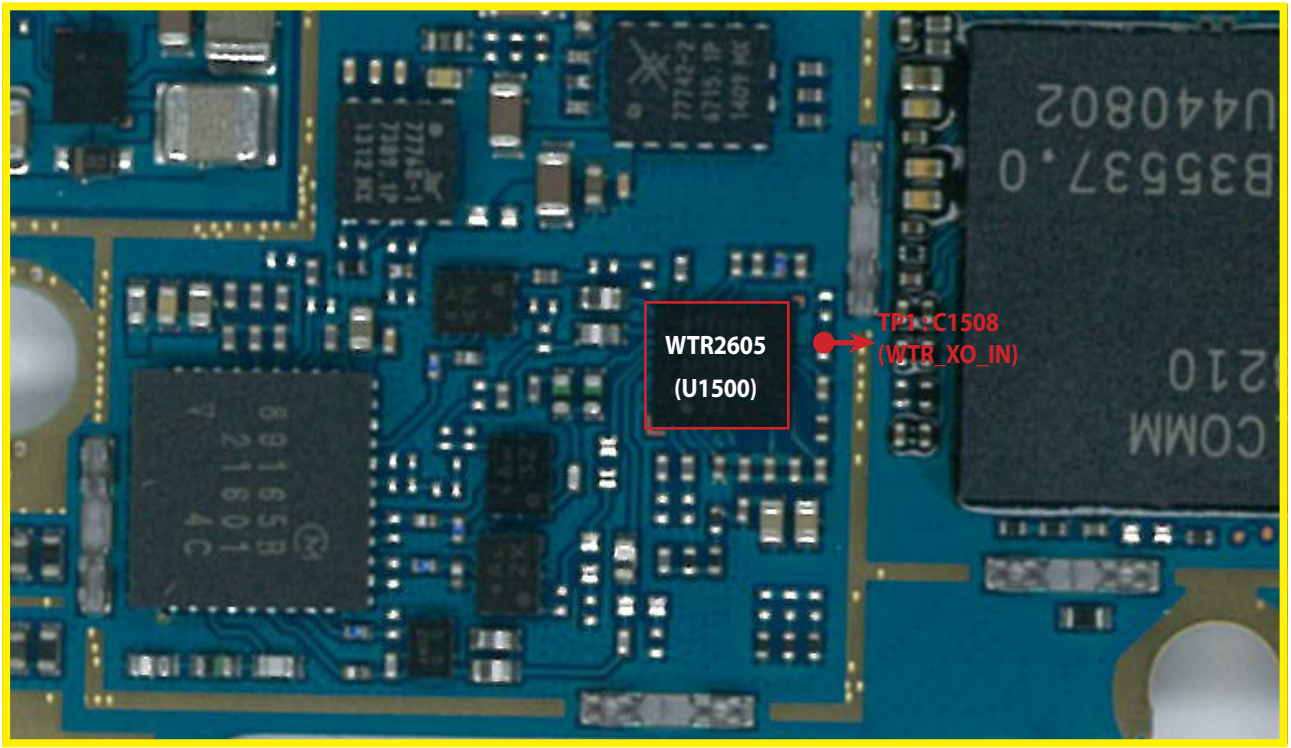

<Main Top>

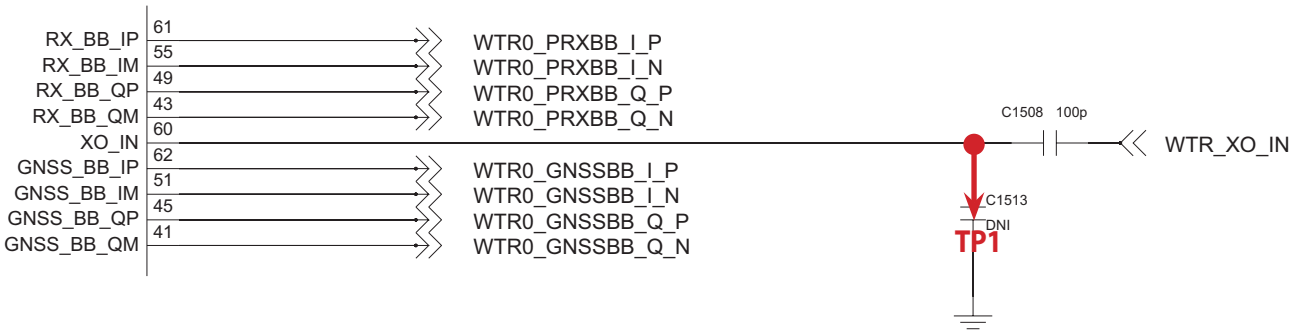

3.3.3.3 Checking RF signal path (TX module)

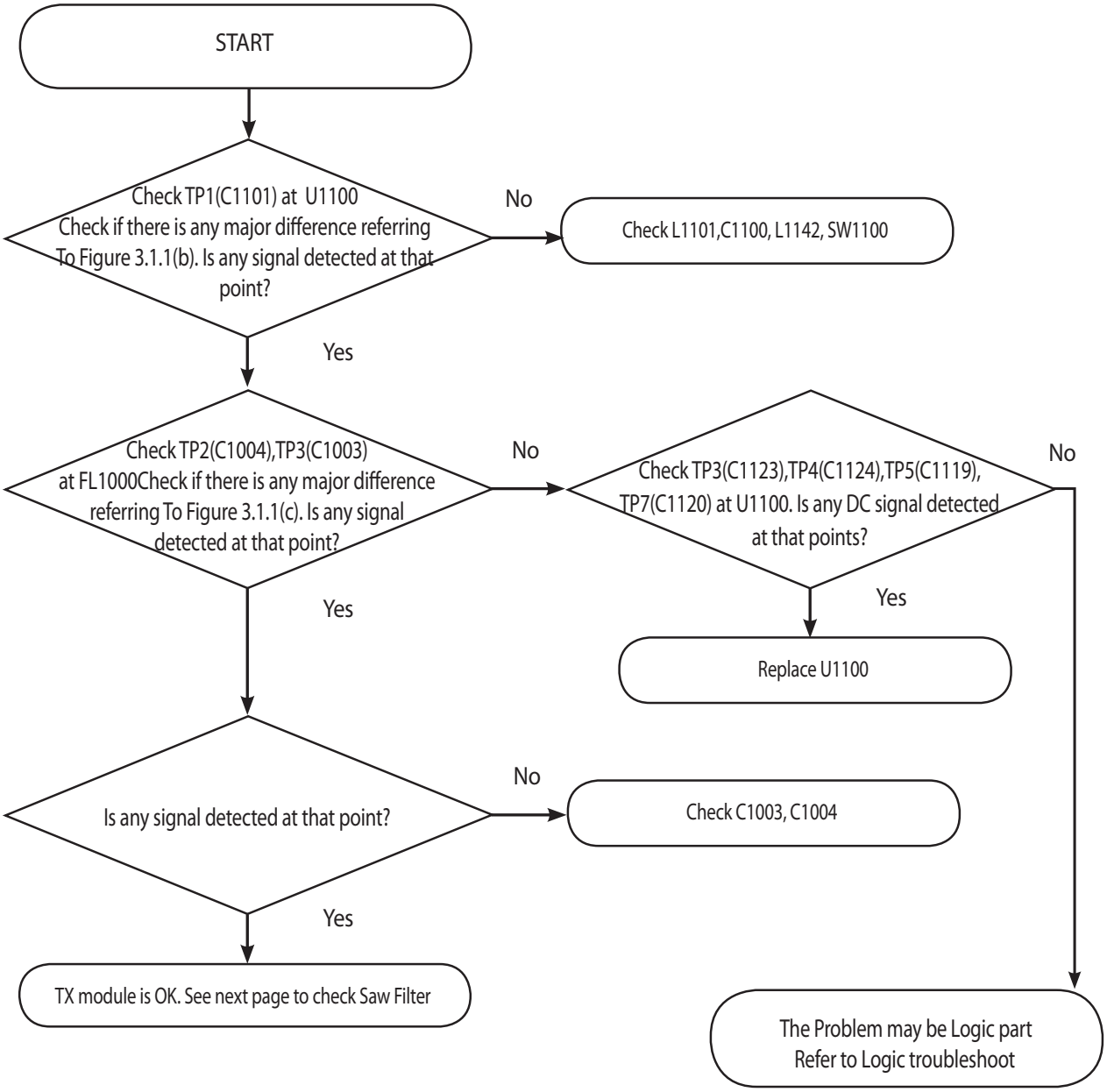

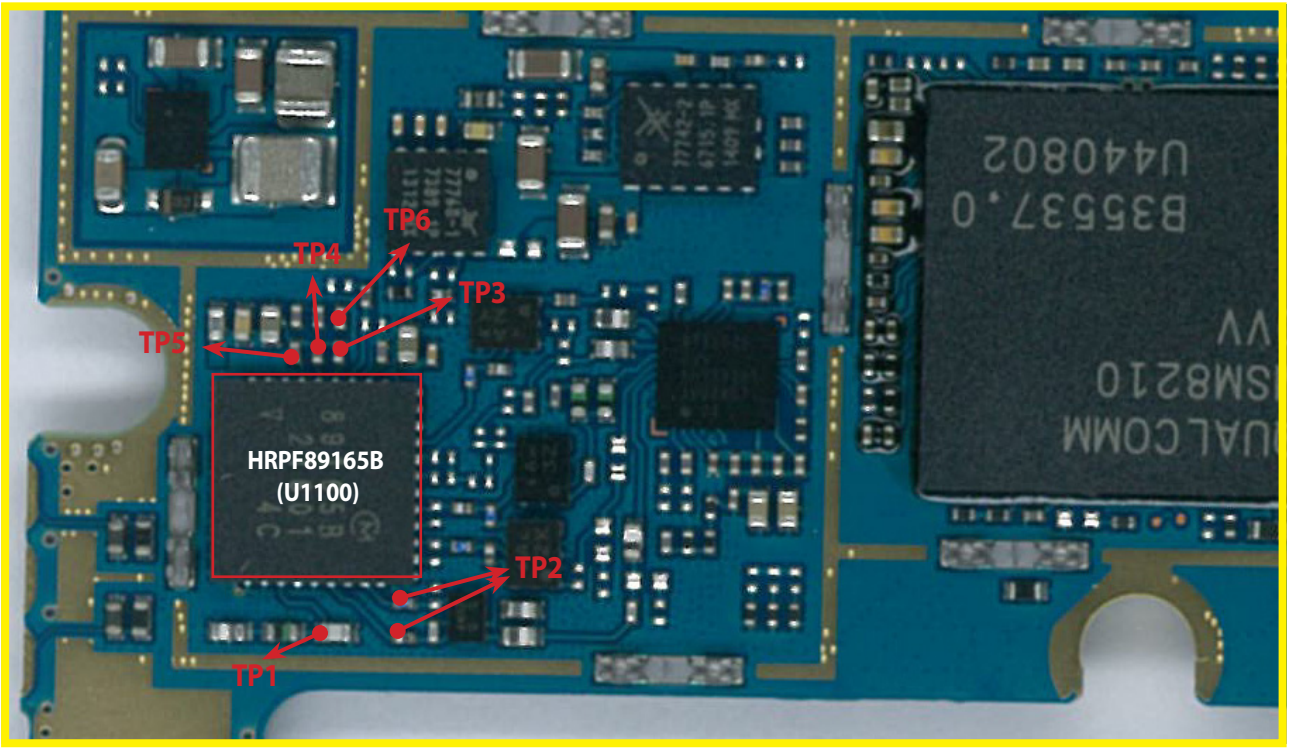

<Main Top>

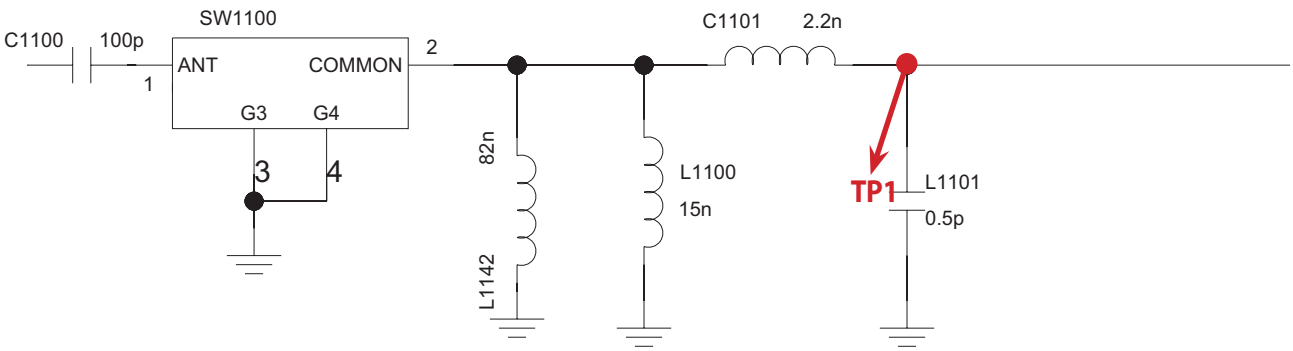

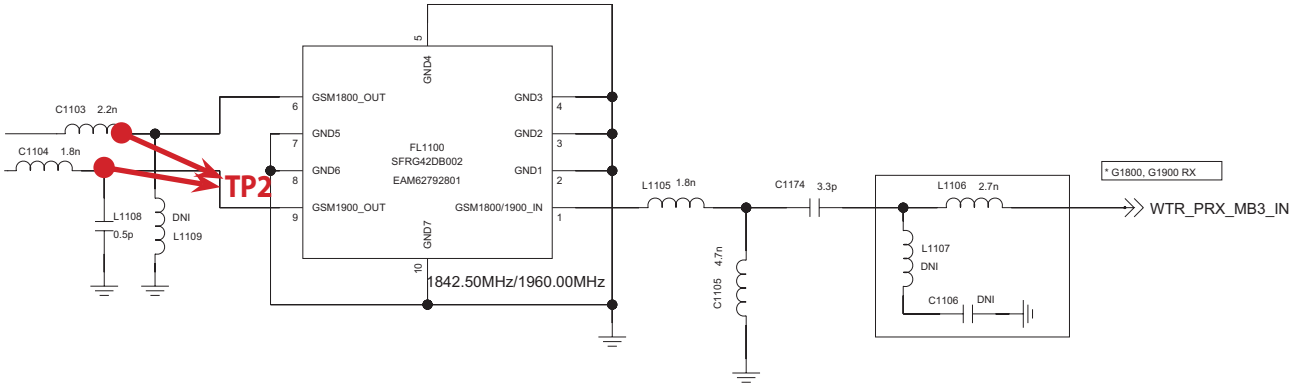

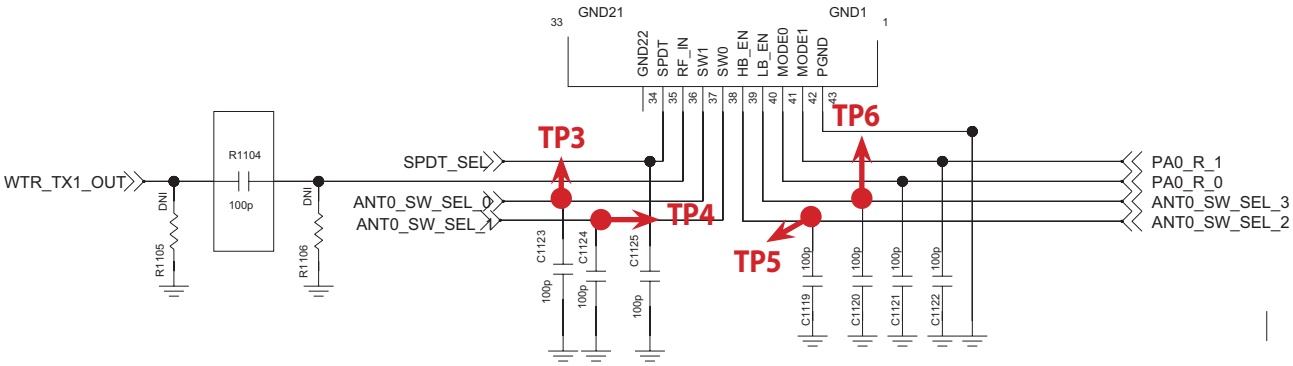

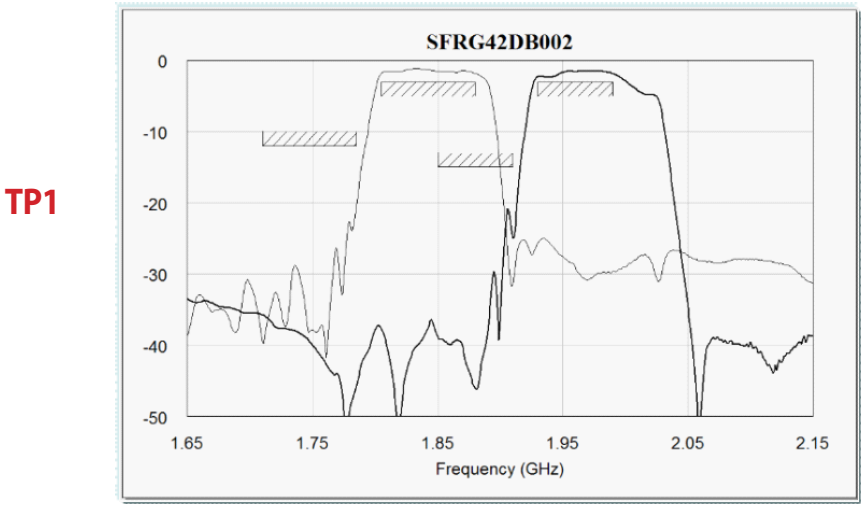

Figure 3.1.1 (b)

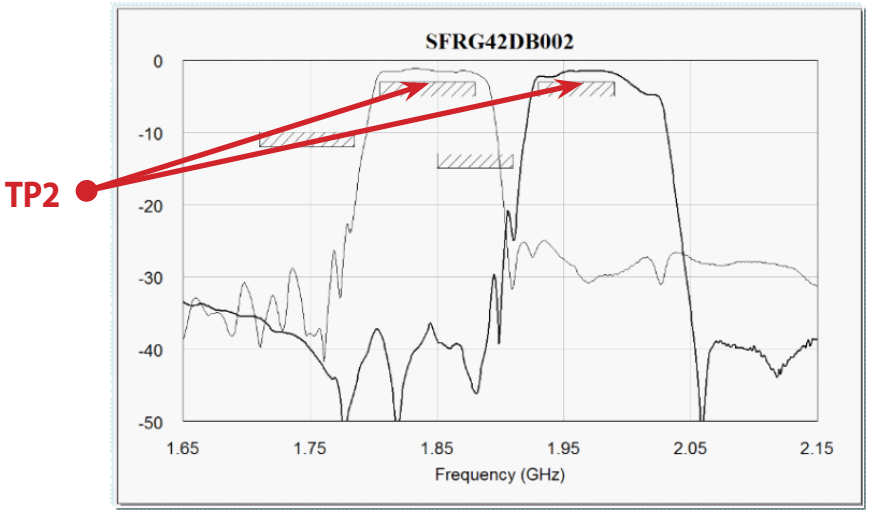

Figure 3.1.1 (c)

3.3.3.4 Checking RF Flow(SAW filter)

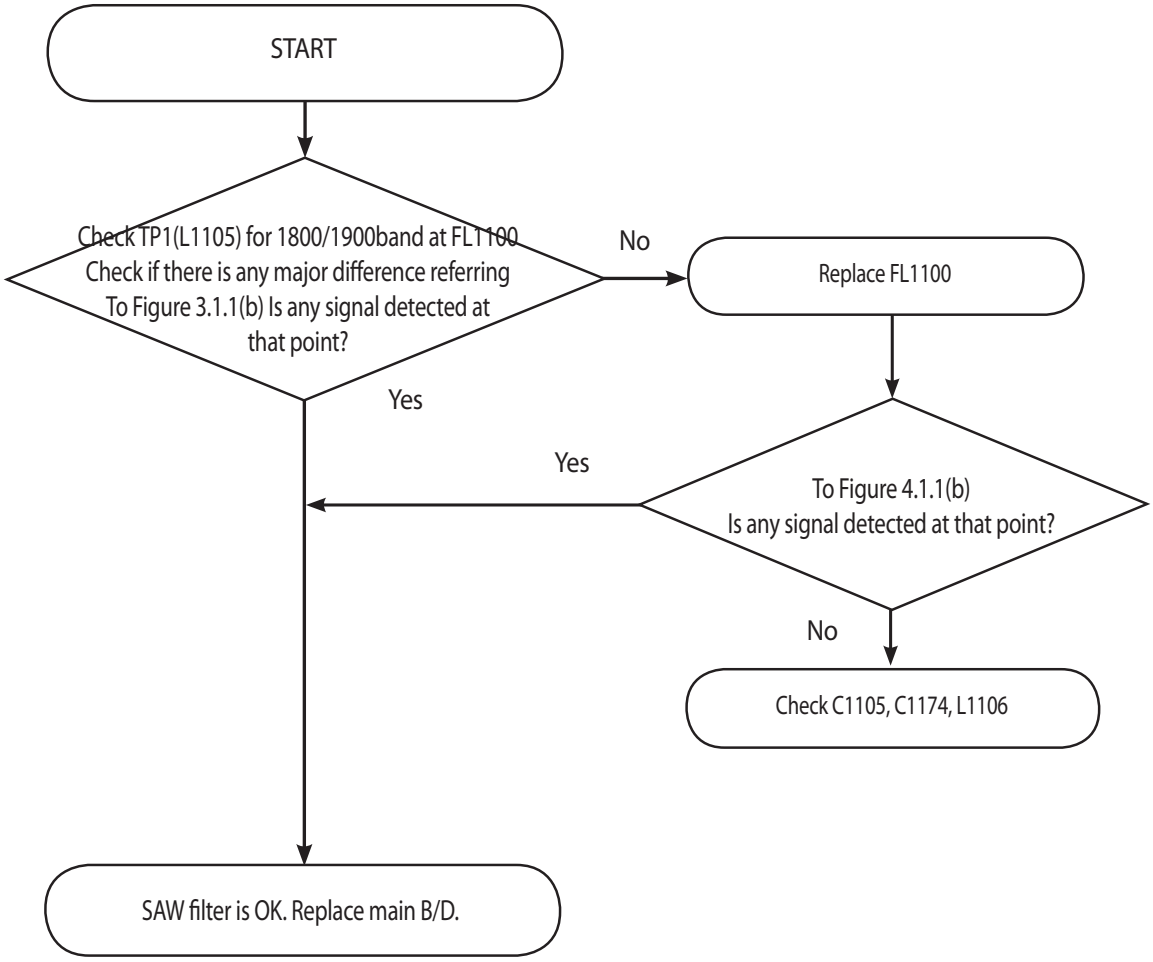

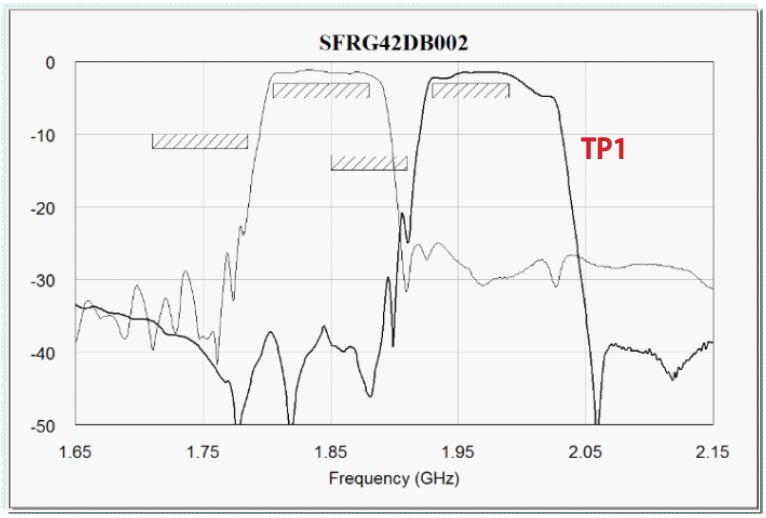

Figure 3.1.1 (b)

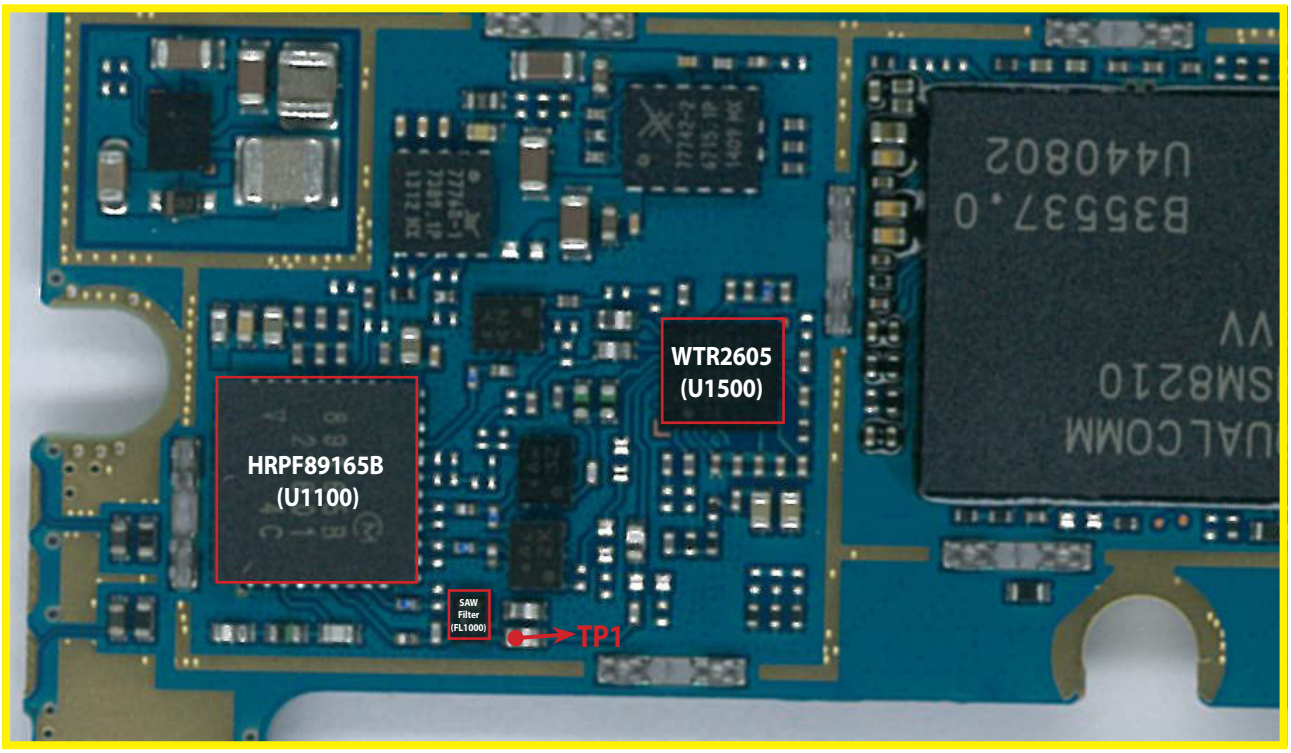

<Main Top>

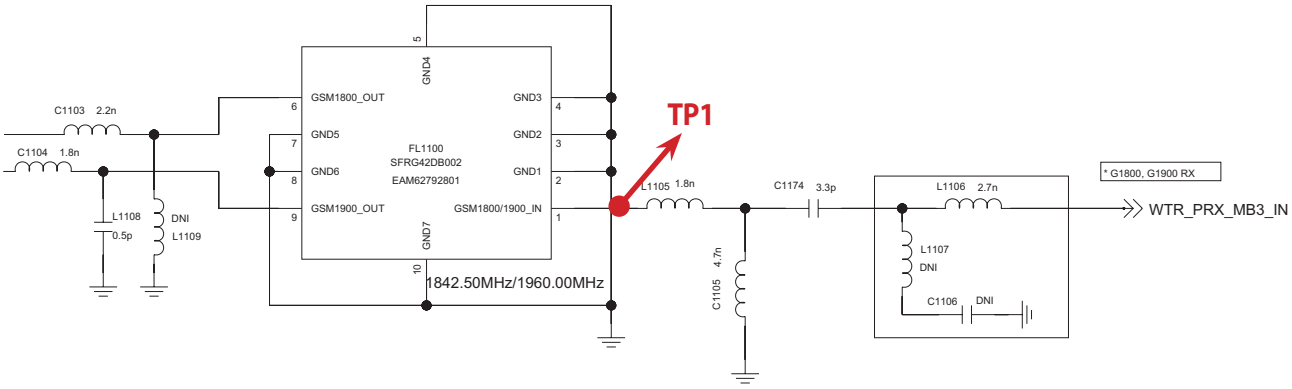

3.4 GSM Tx Part Troubleshooting

3.4.1 GSM850/900/1800/1900 Tx

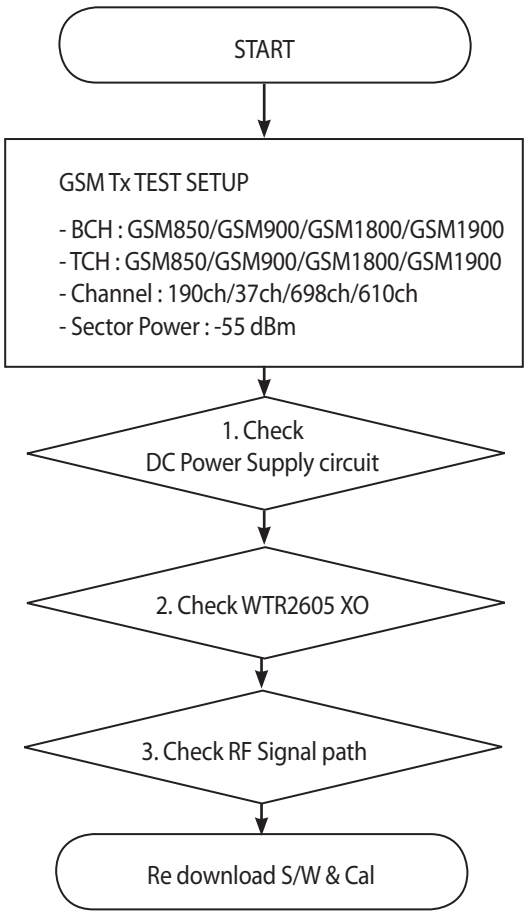

* There are no Test Points on the IQ Data Line. So It is impossible to check the IQ Data Wave form

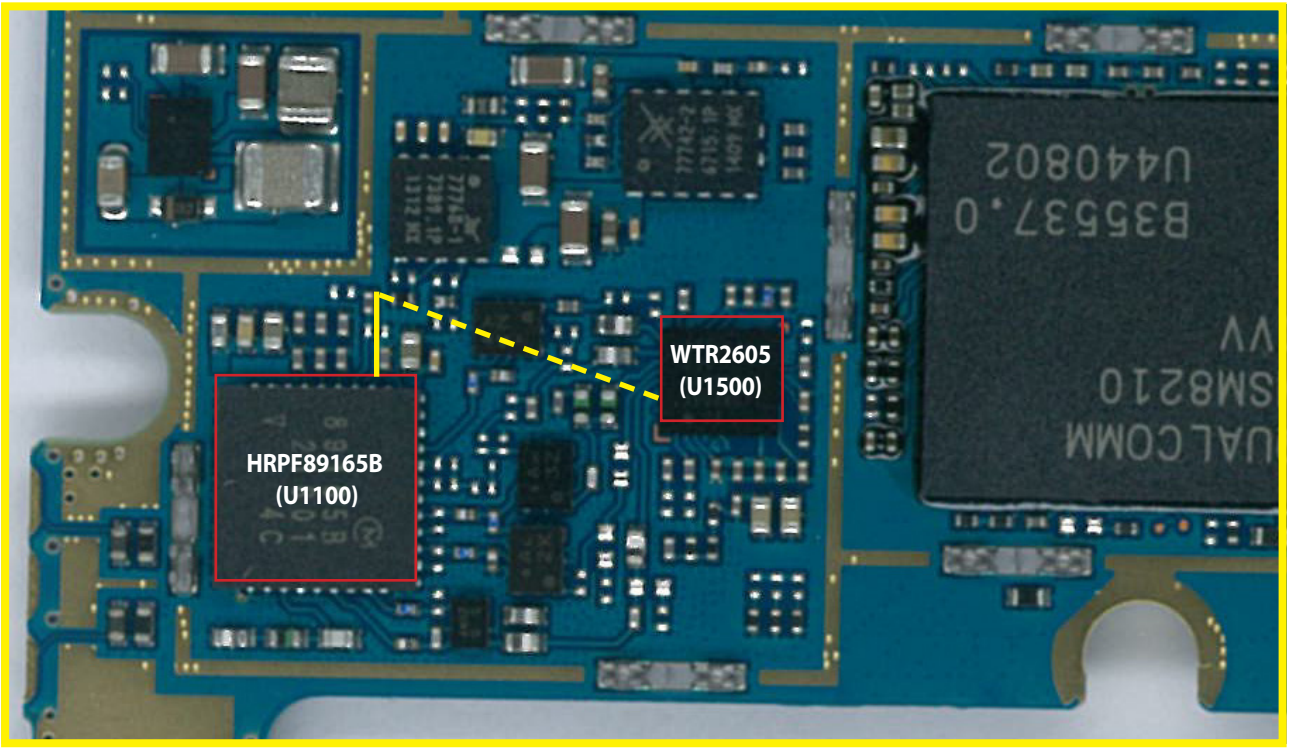

<Main Top>

3.4.1.1 Checking DC Power supply circuit

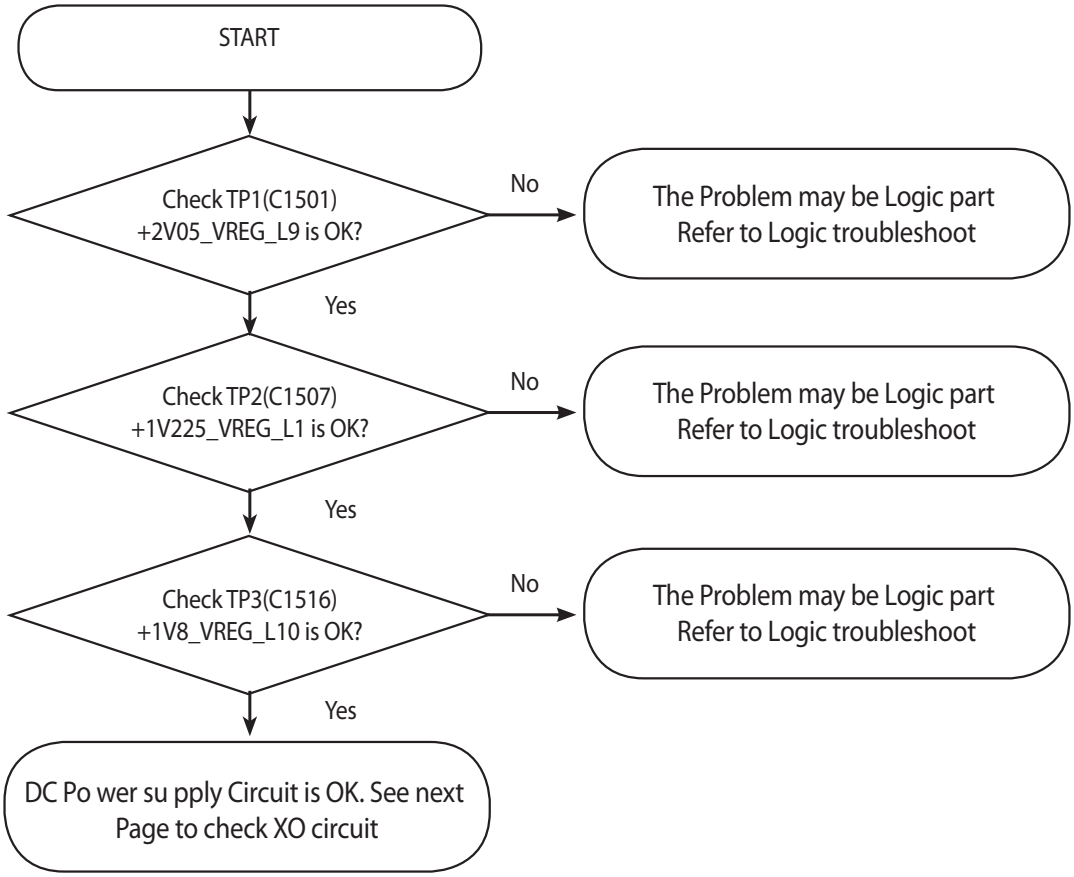

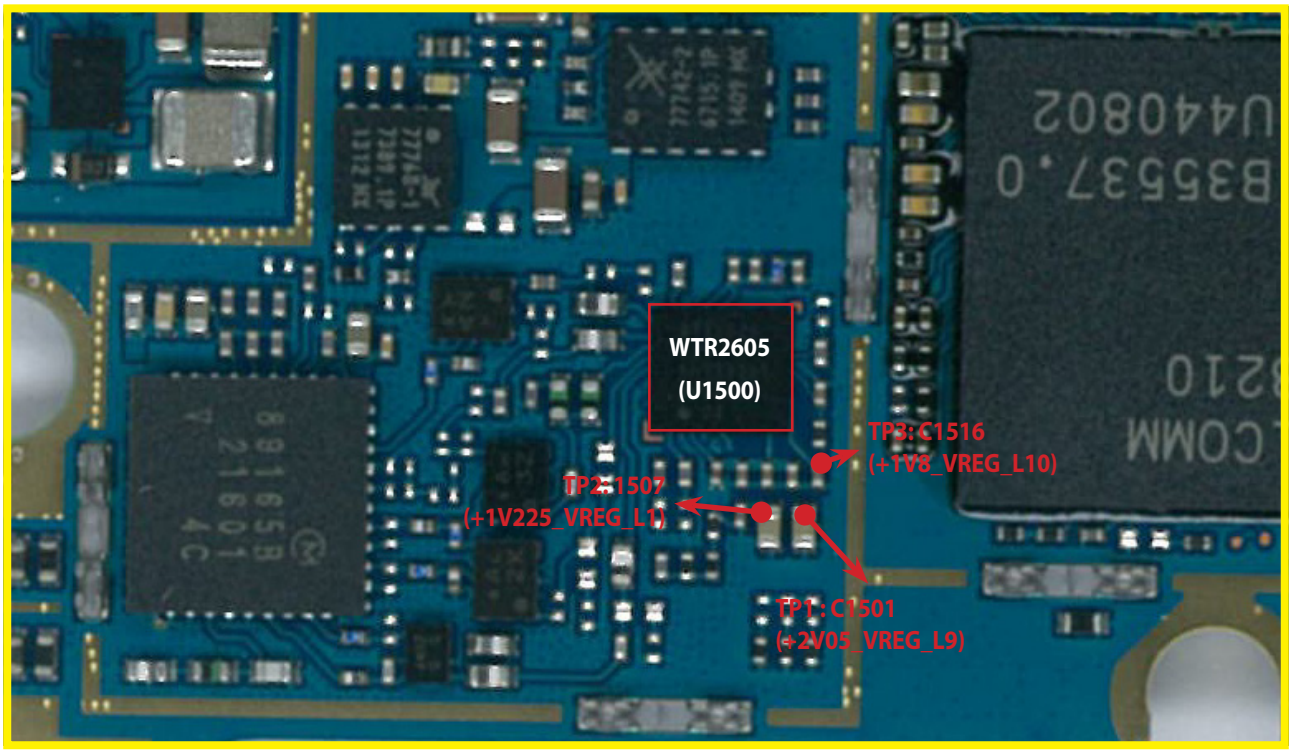

<Main Top>

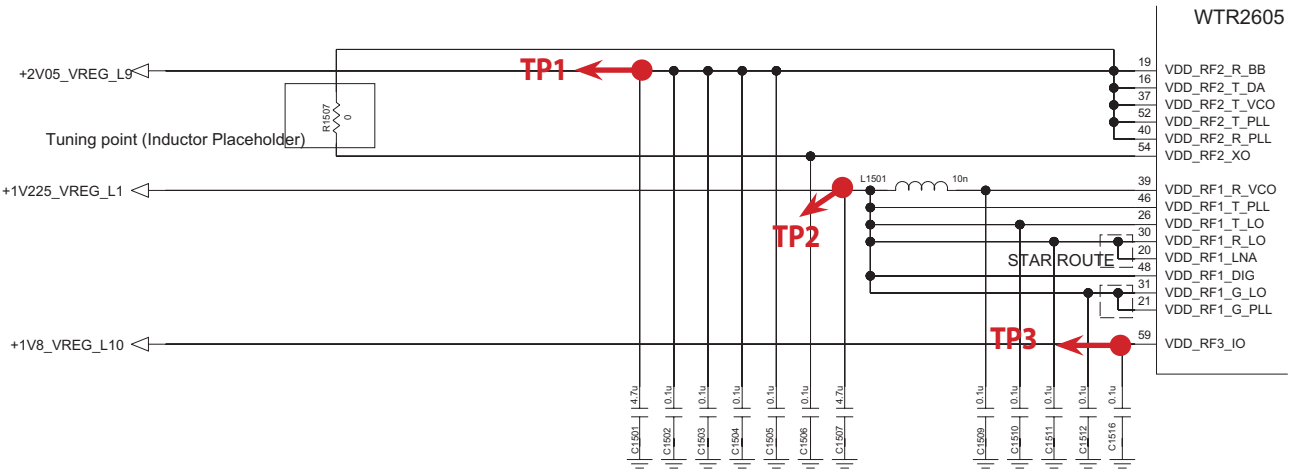

3.4.1.2 Checking WTR2605 XO circuit

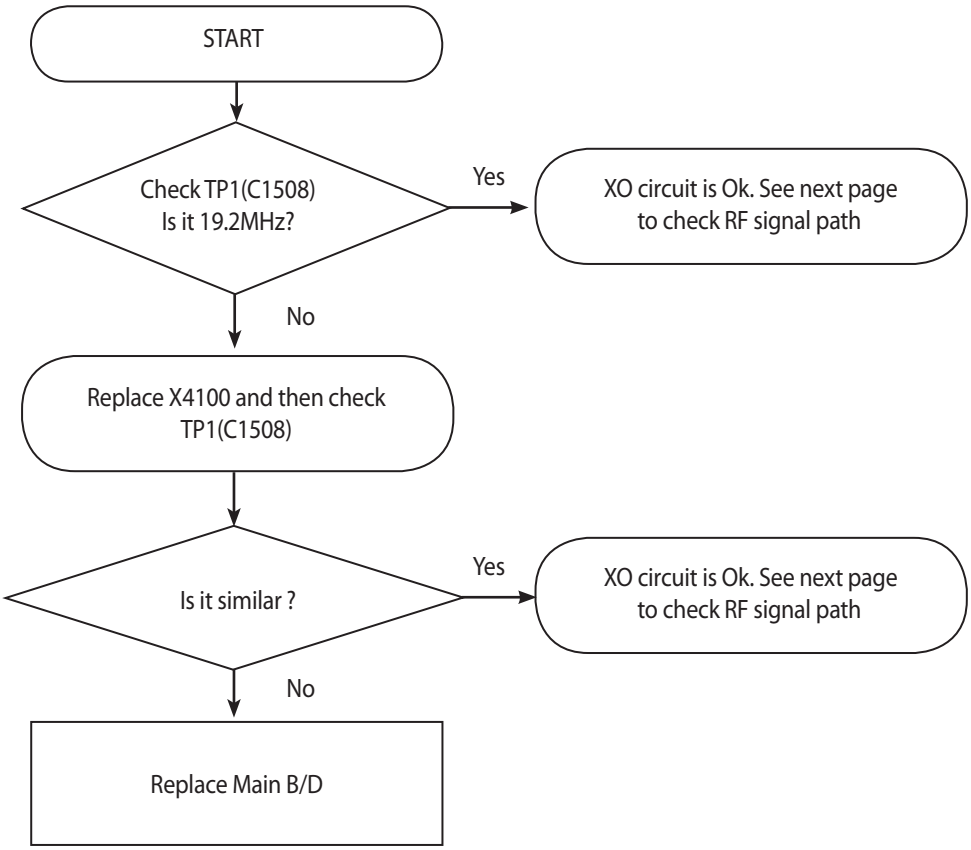

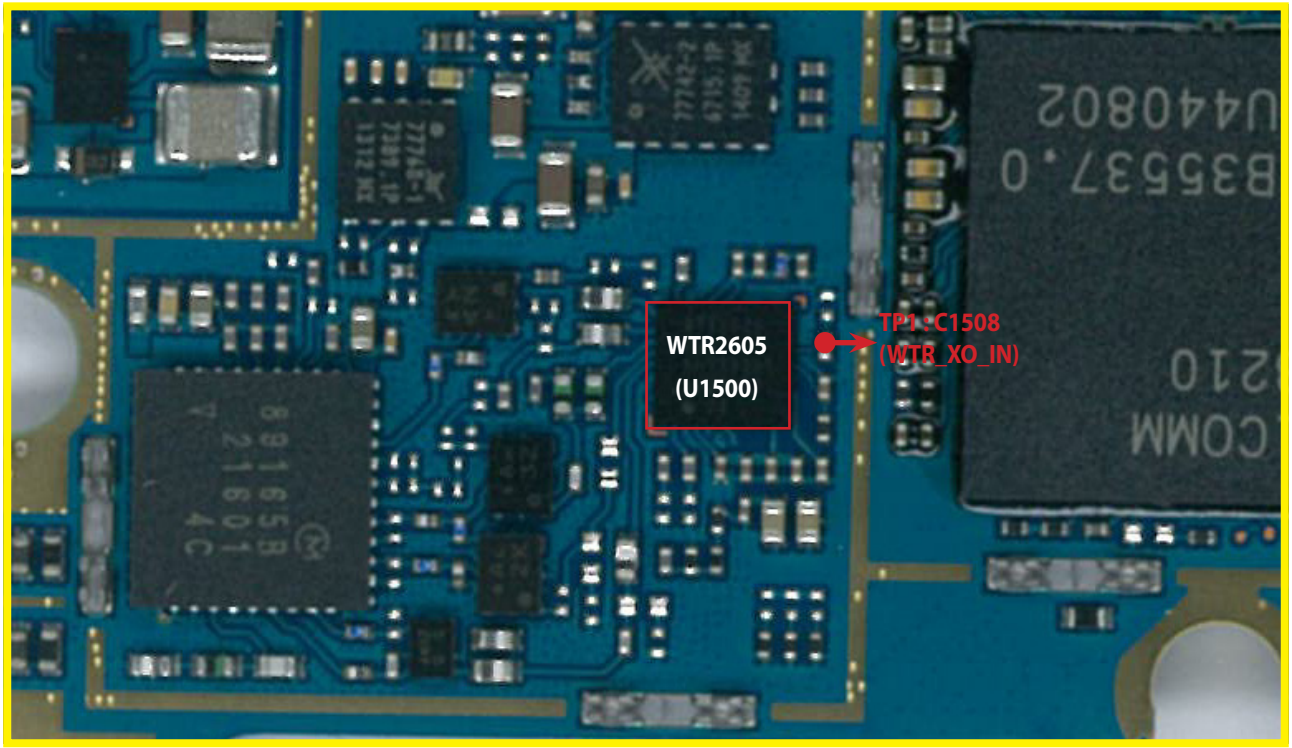

<Main Top>

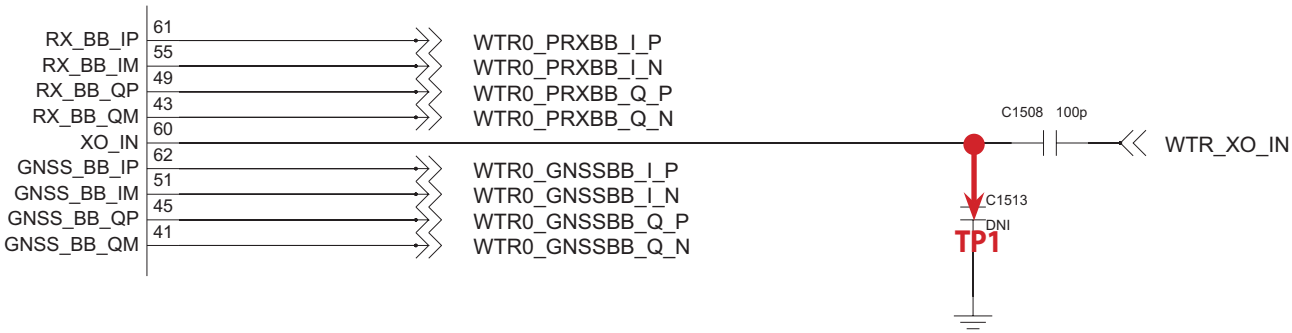

3.4.1.3 Checking RF signal path (Tx Module)

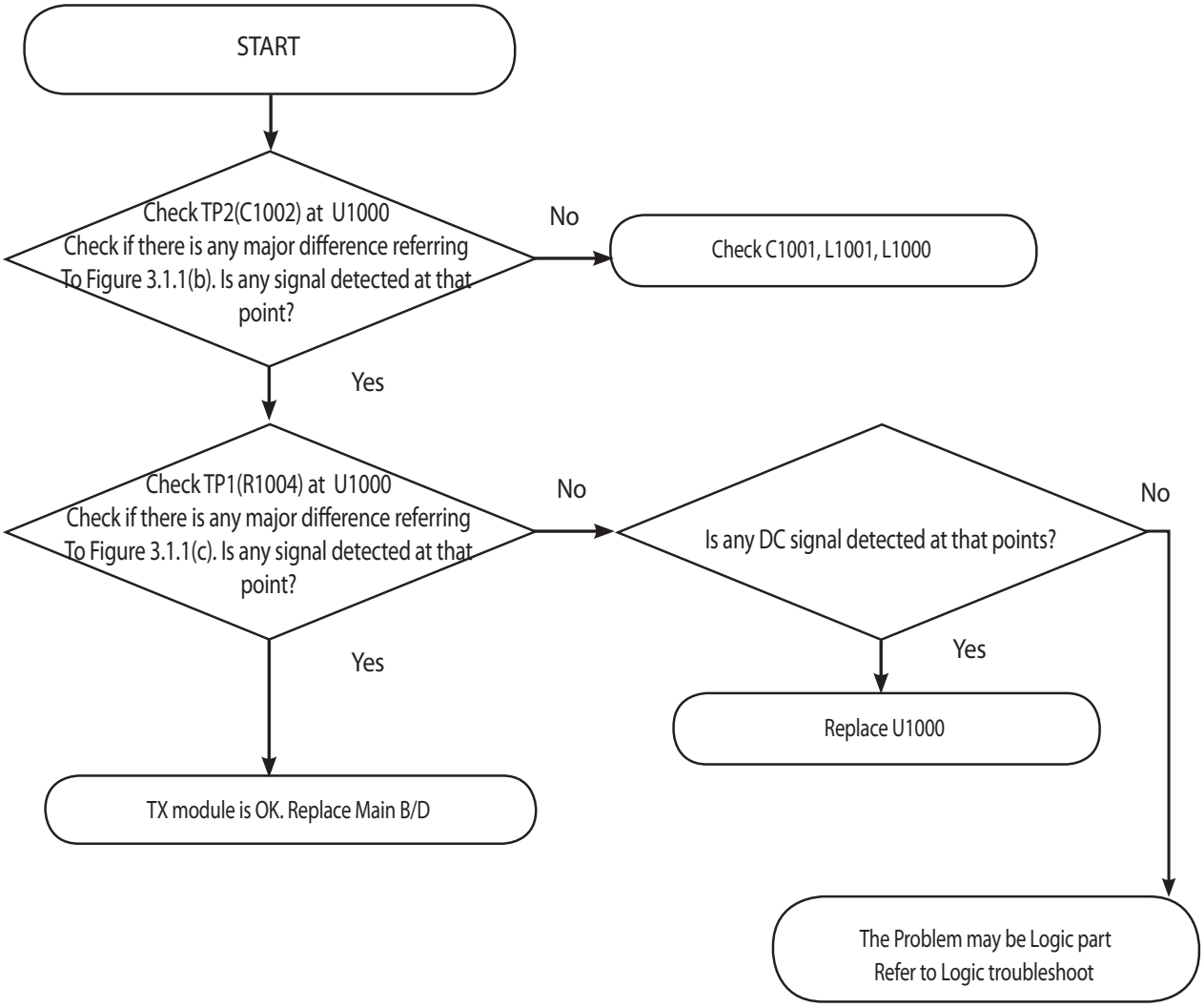

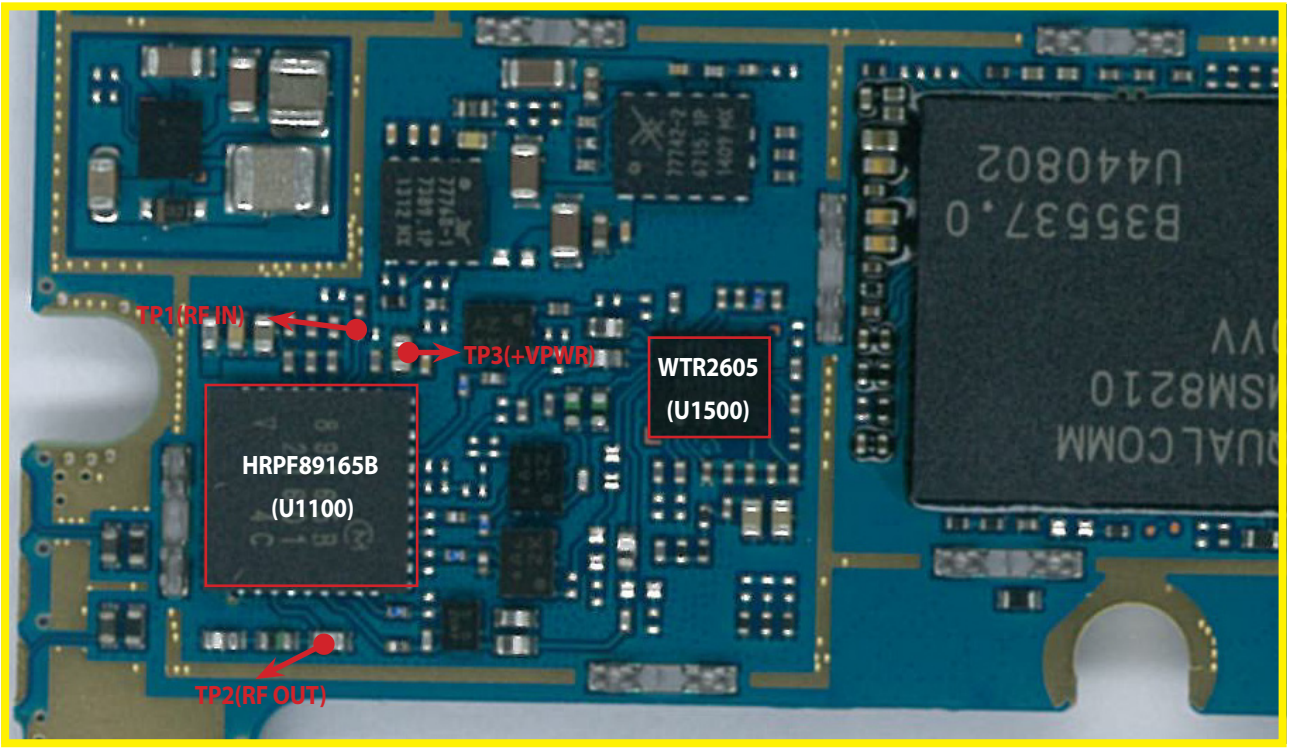

<Main Top>

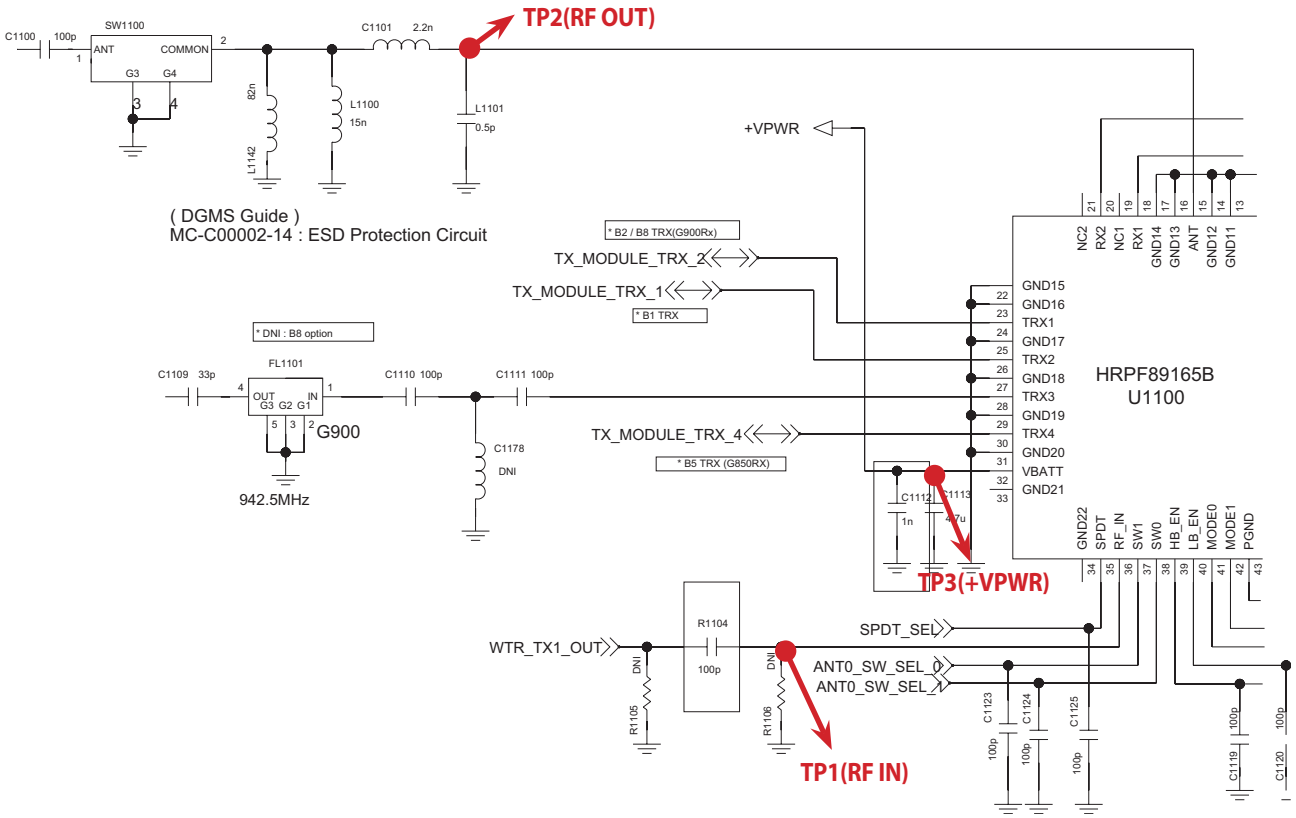

3.5 Power TS

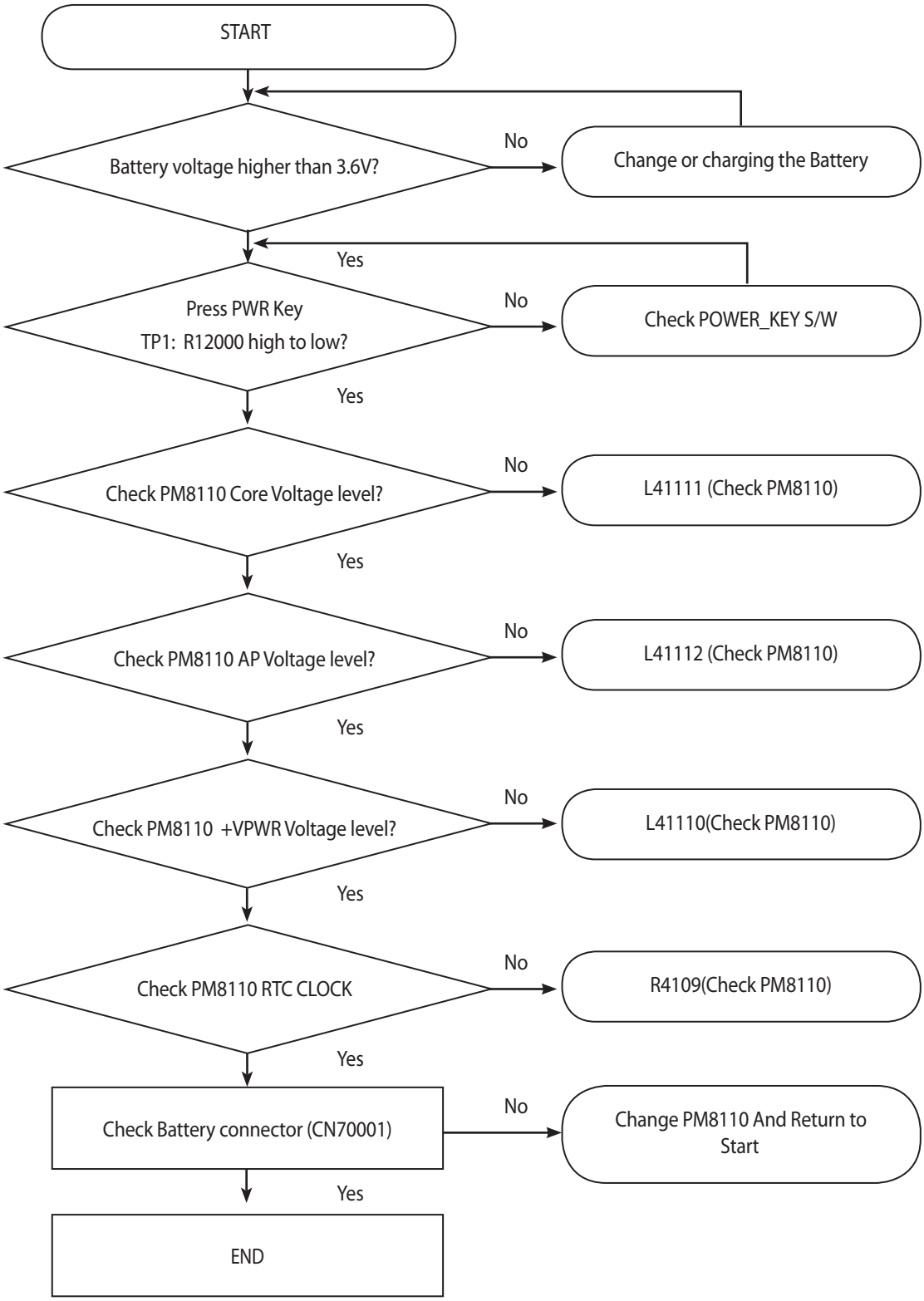

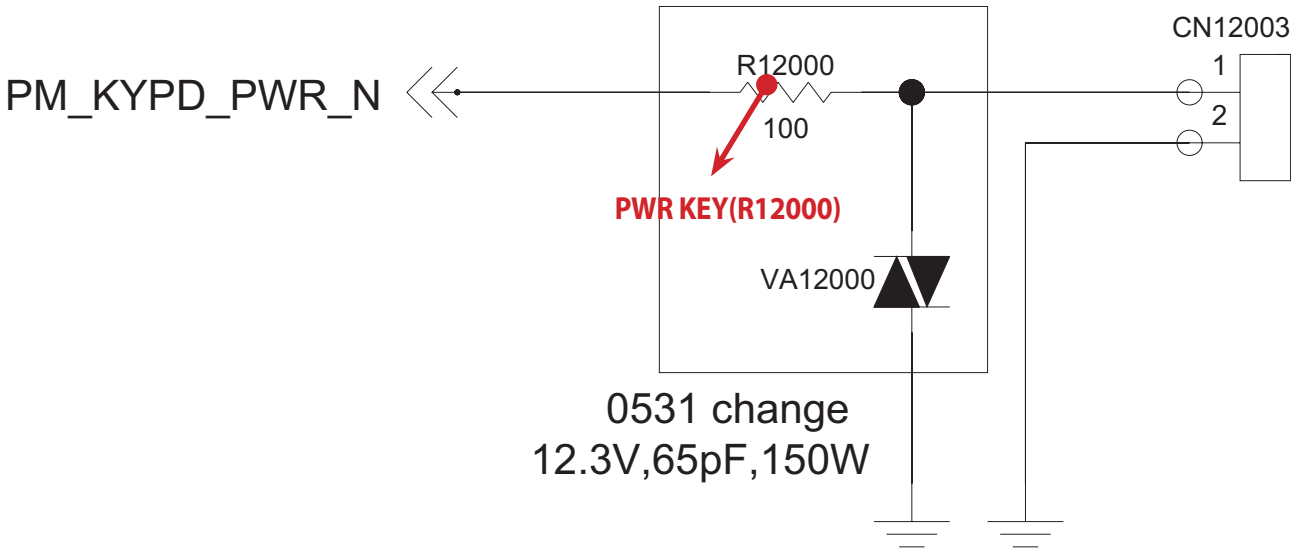

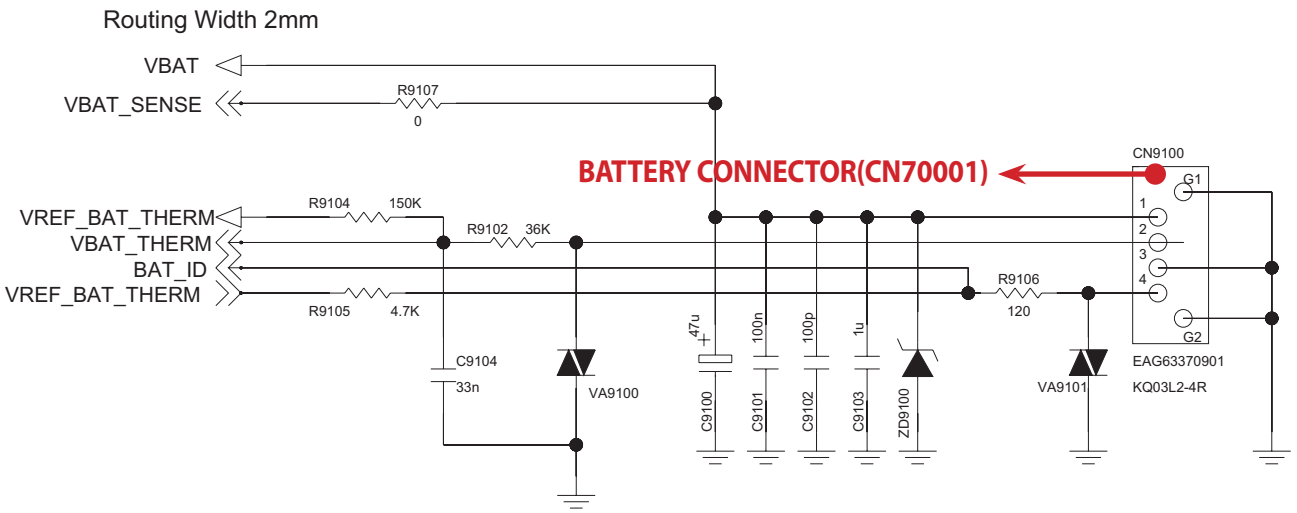

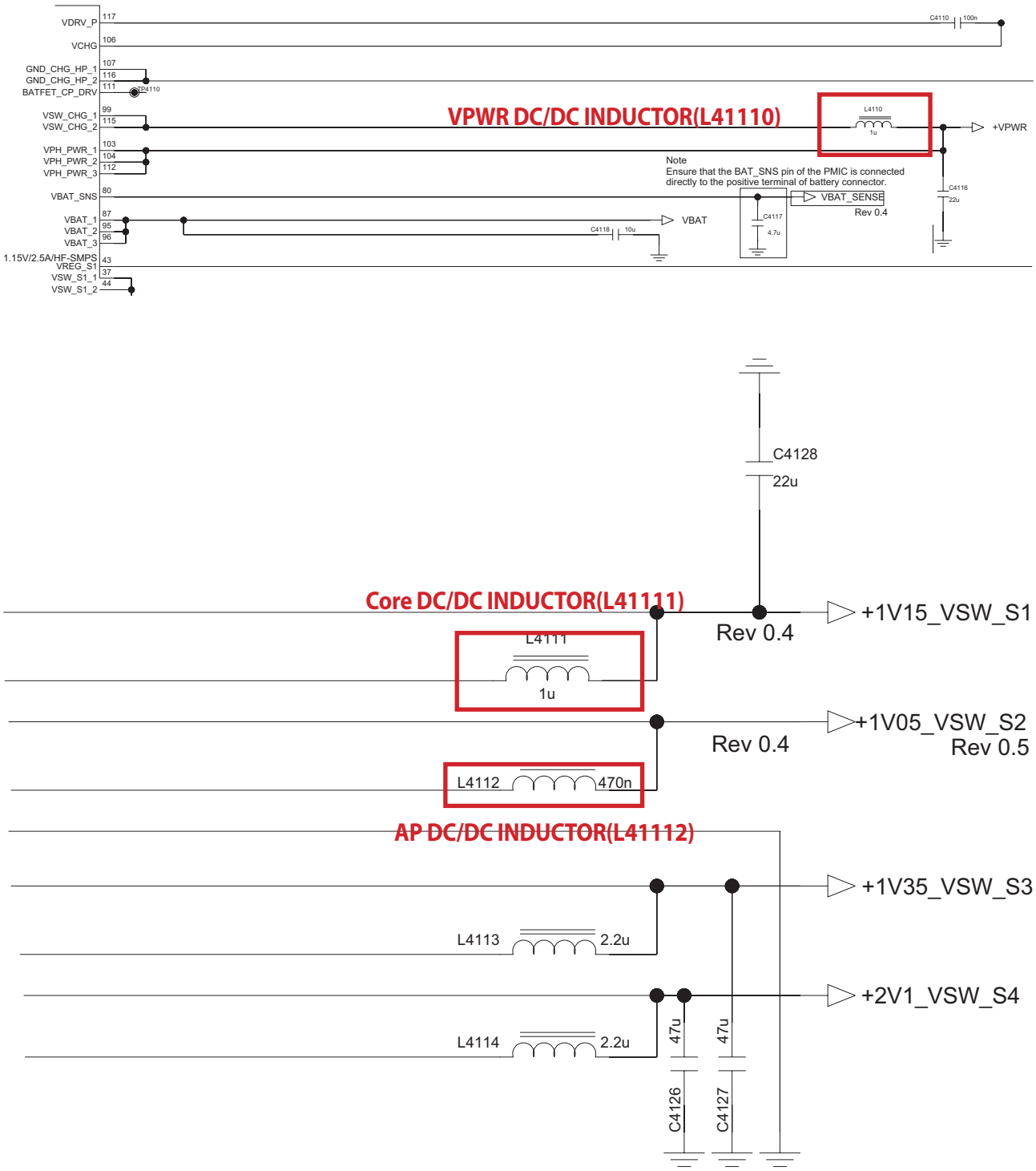

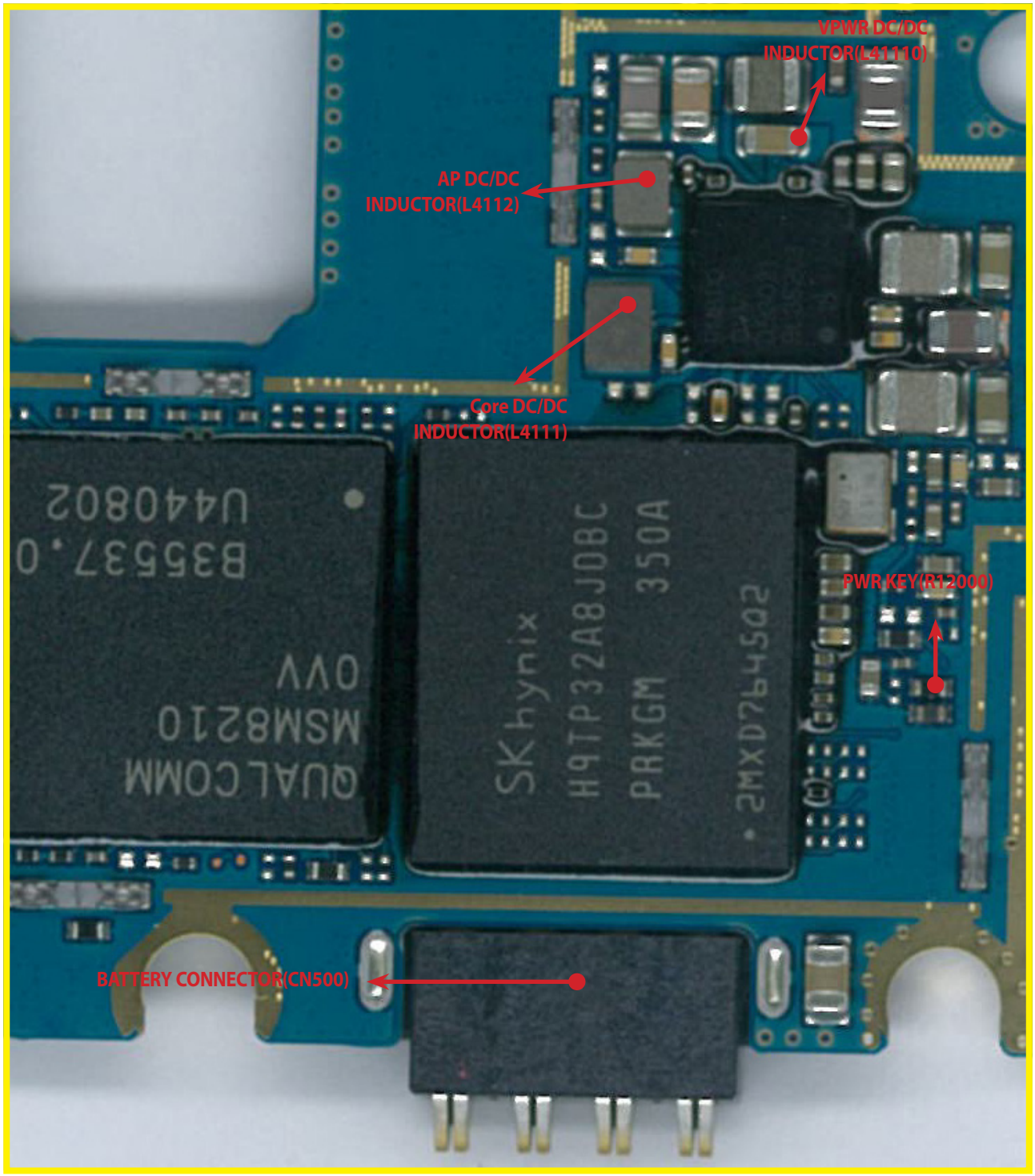

<Main Top>

3.6 Charging TS

D373EU uses PMIC for charging control. The PMIC circuit includes the charging pass transistor detects the VDD and VBAT voltages, and its control driver. The PMIC maximum charging current is set around 700mA.

Charging Procedure

- Supply the VCHG use a TA or u-USB cable
- The Chager IC control the charging current
- Charging current flows into the main battery

Troubleshooting Check Point

- Connection of the TA or u-USB cable
- Main battery

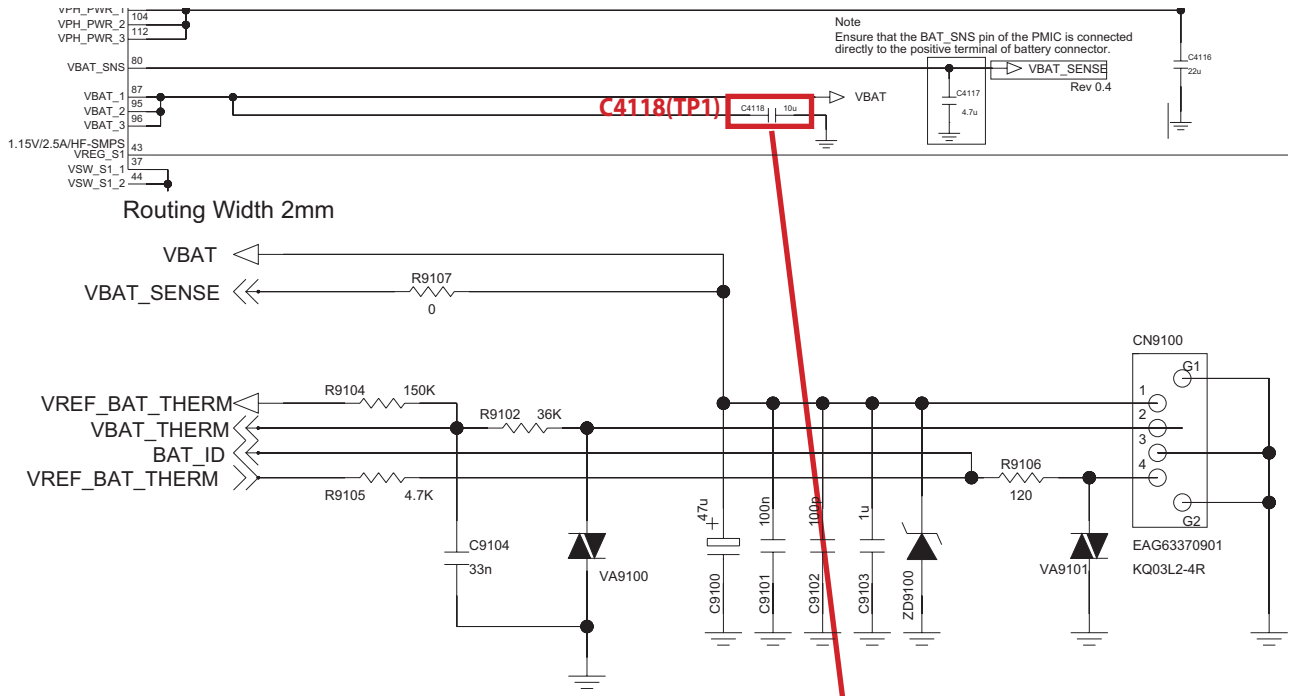

<Main Top>

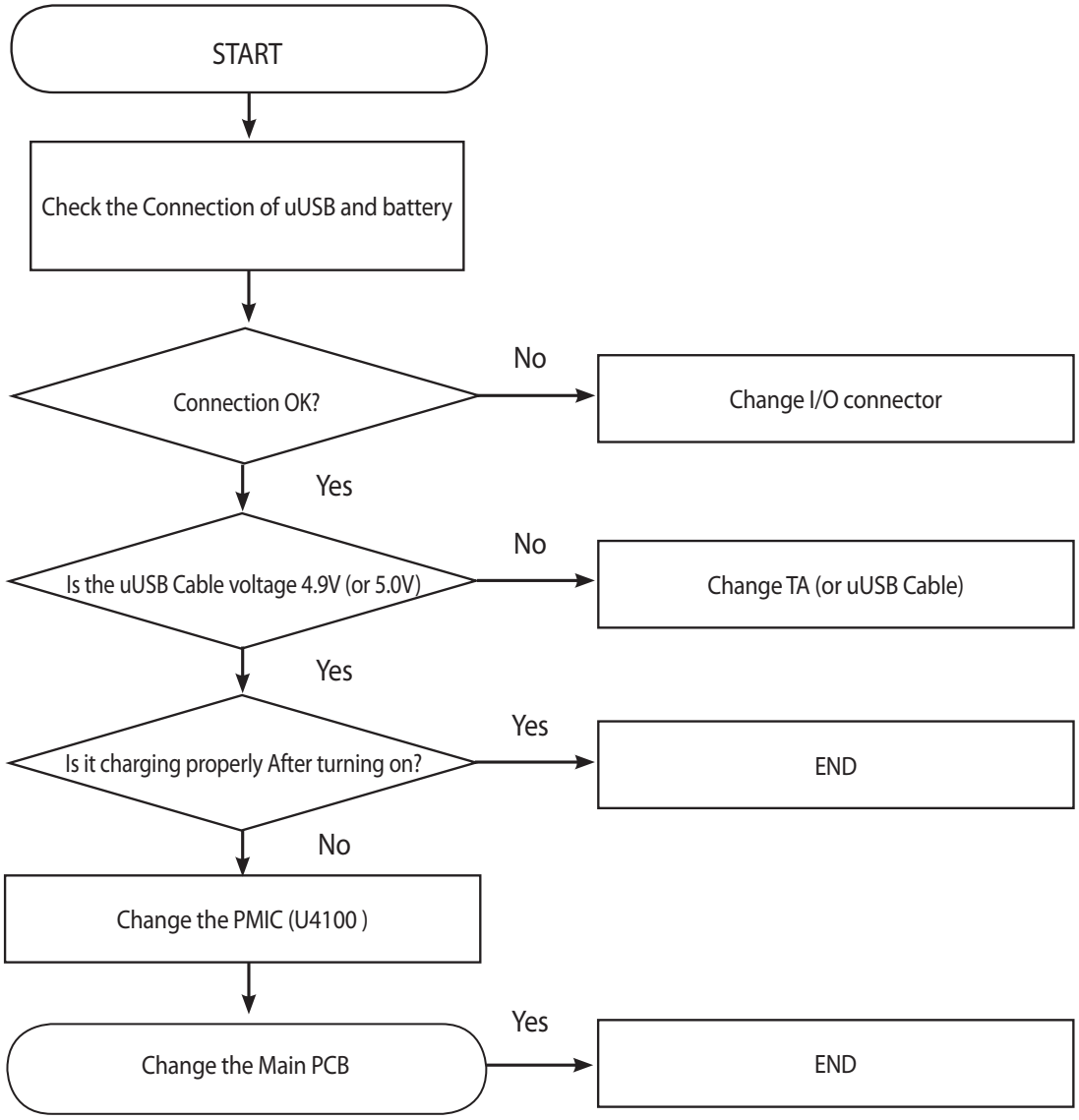

3.7 USB TS

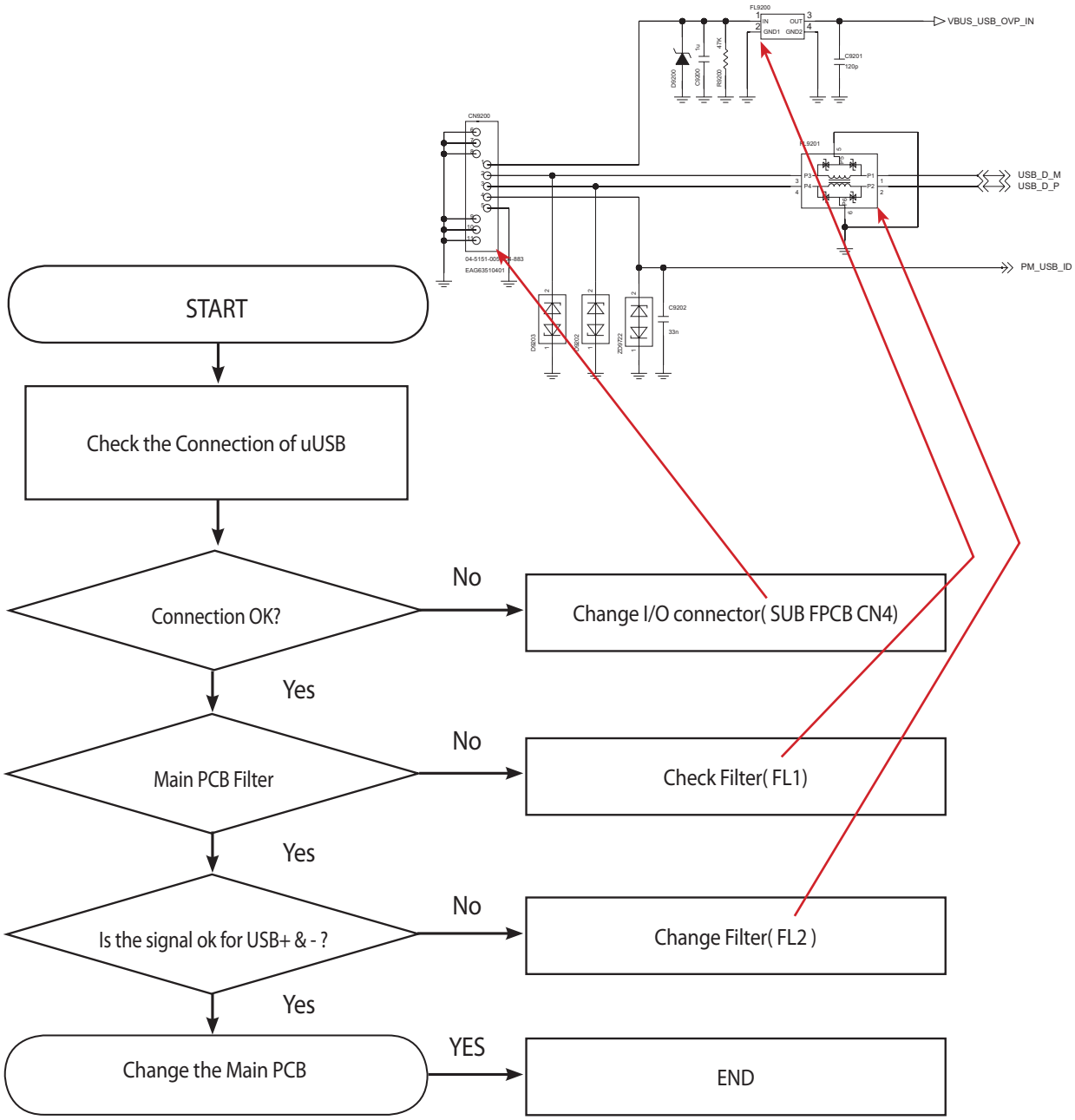

3.8 Audio

3.8.1 Overview

Audio Block Diagram

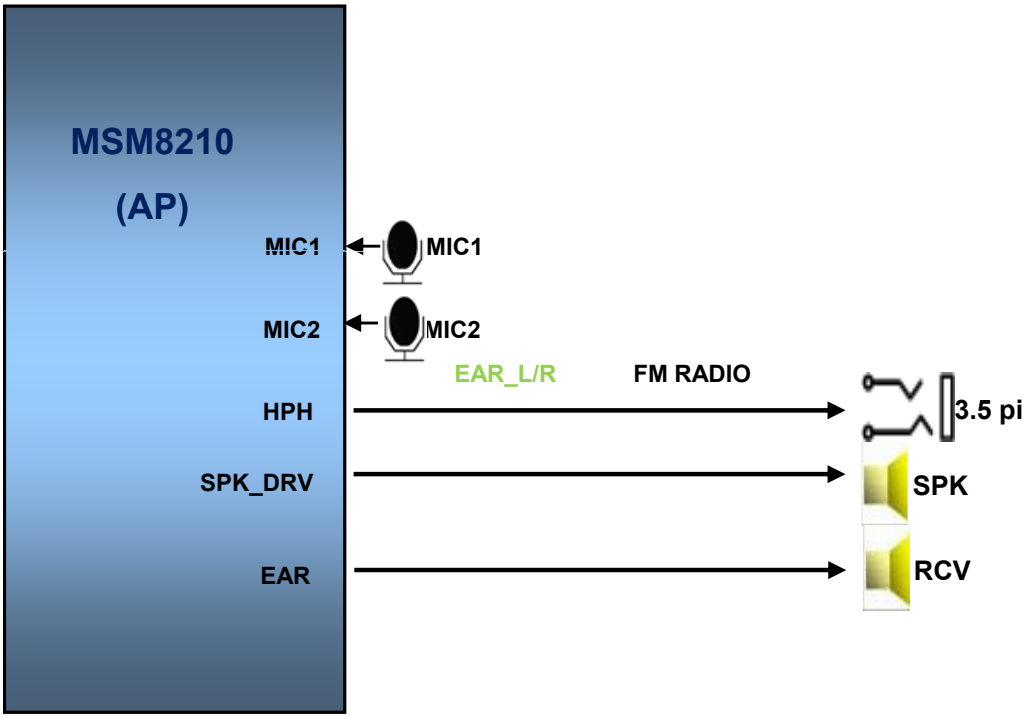

3.8.2 Speaker

It's trouble shooting guide for no sound case.
Speaker control signals are generate by MSM8210(U2100)
If low level volume or breaking the sound, change speaker module

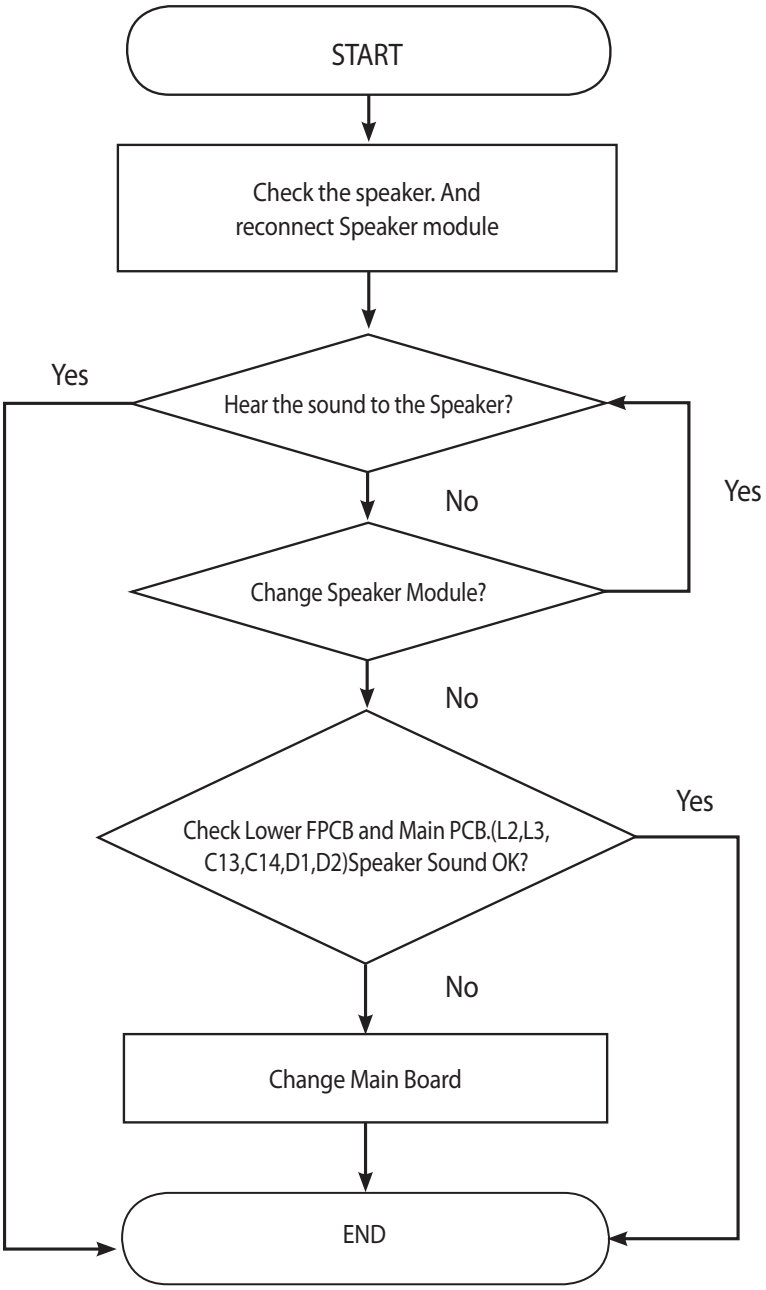

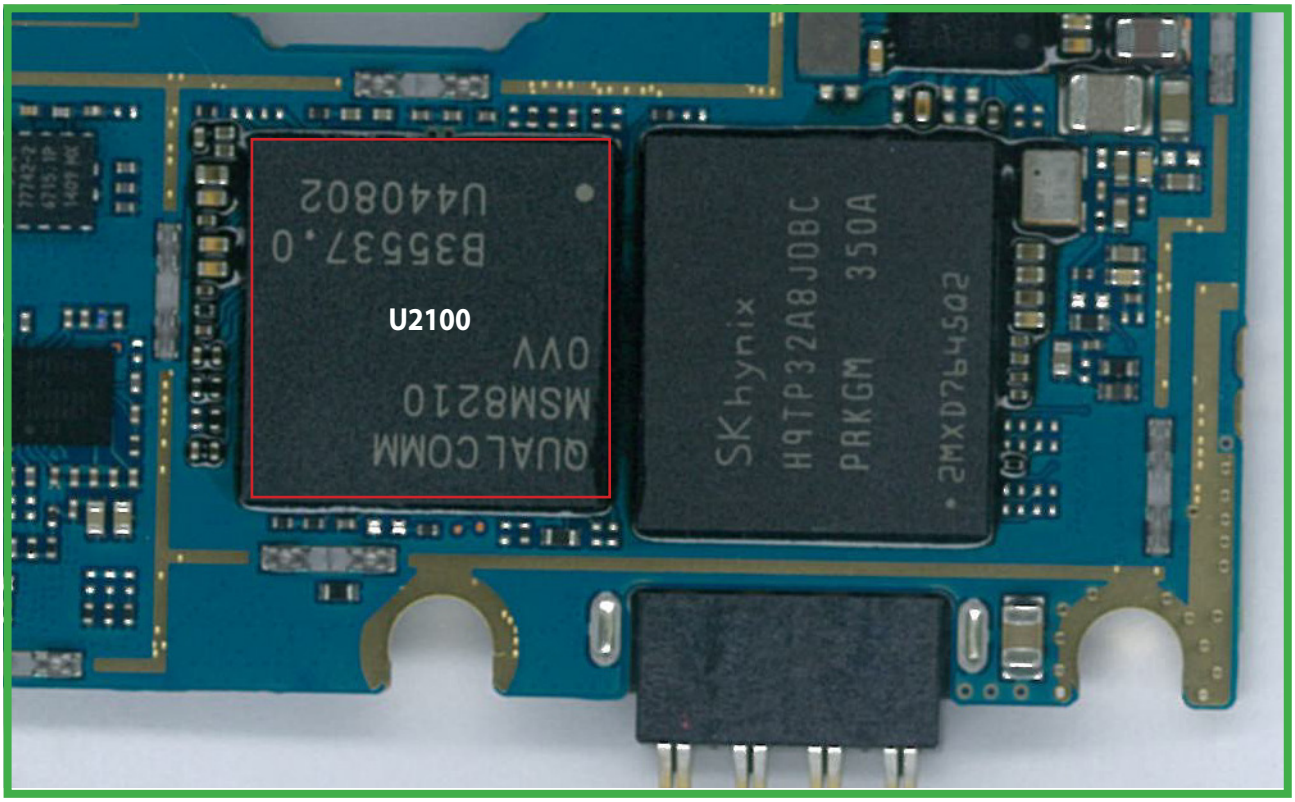

<Main Top>

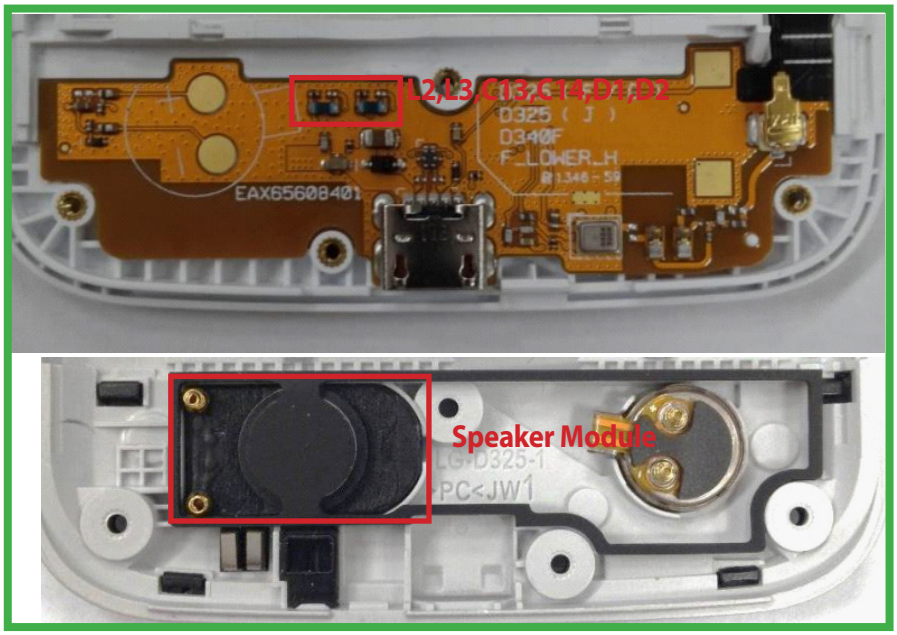

Main PCB

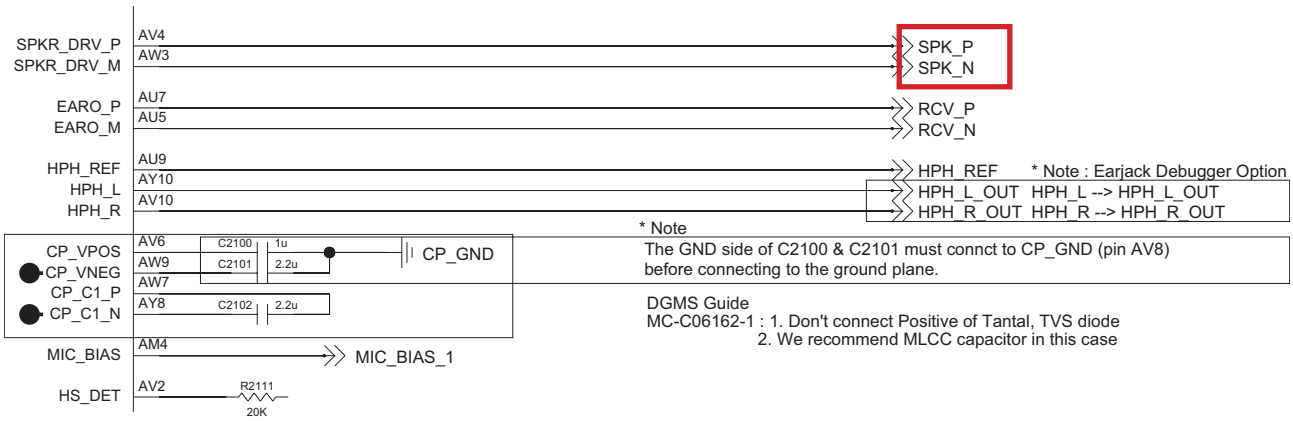

FPCB

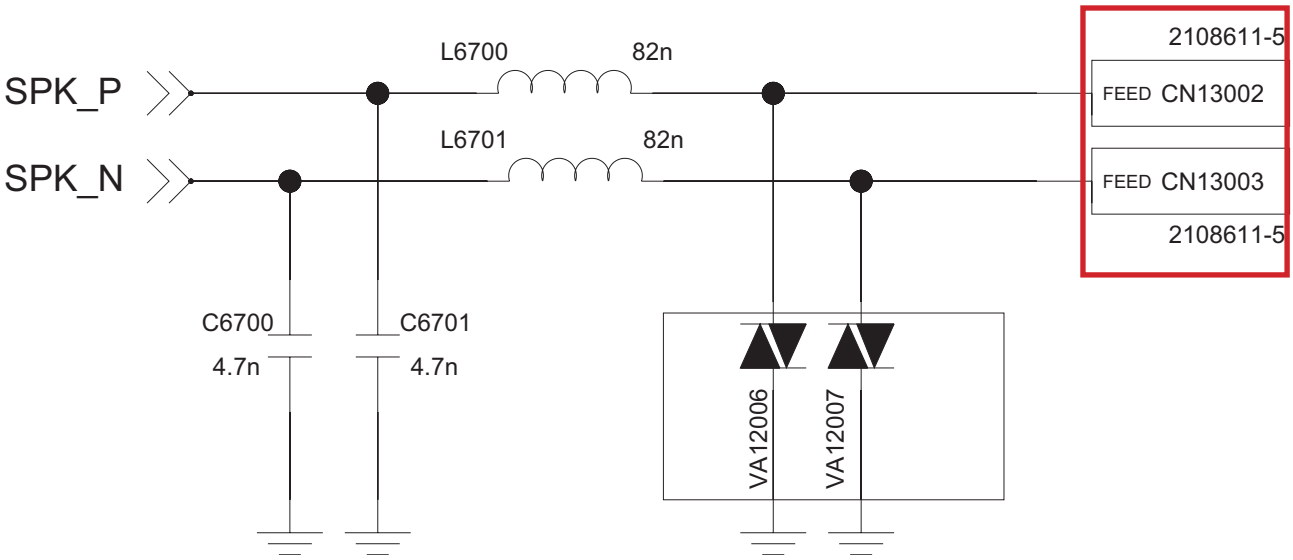

3.8.3 Receiver

Receiver control signals are generate by MSM8210(U2100)

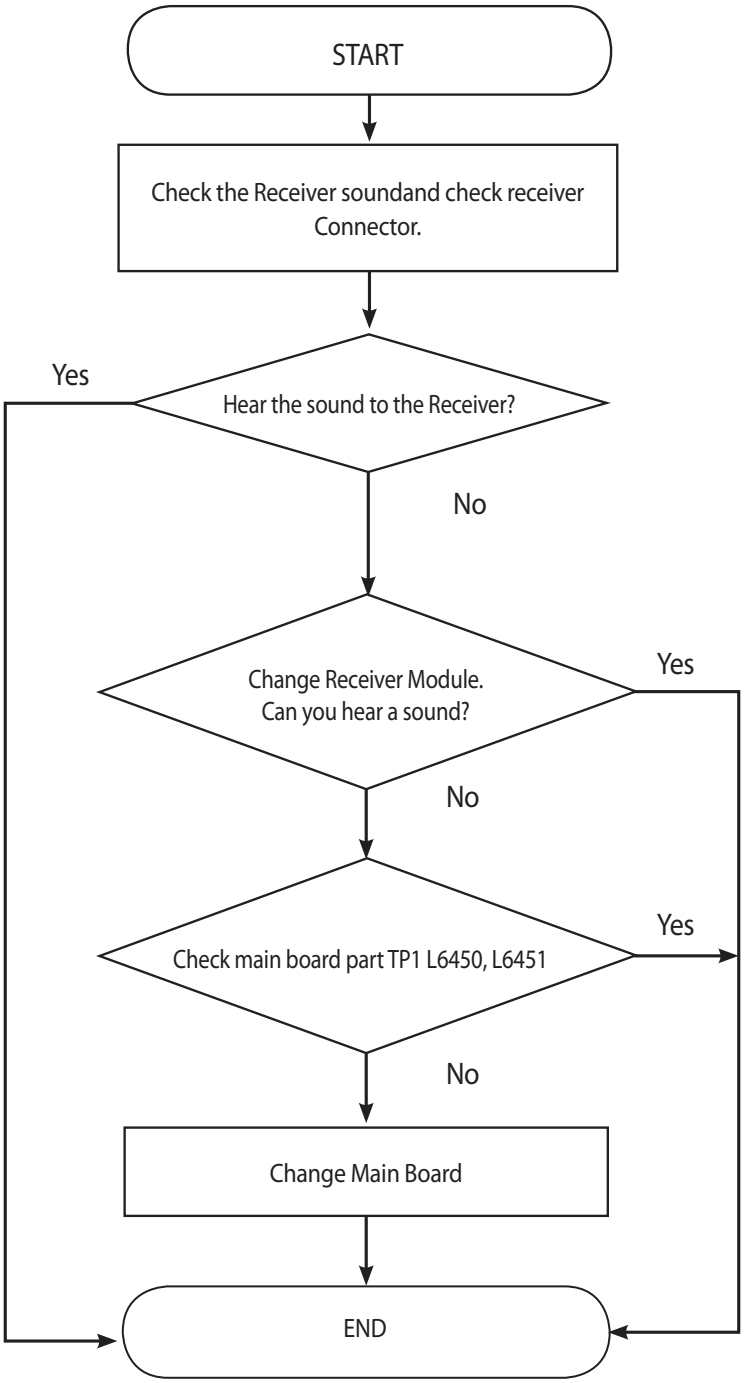

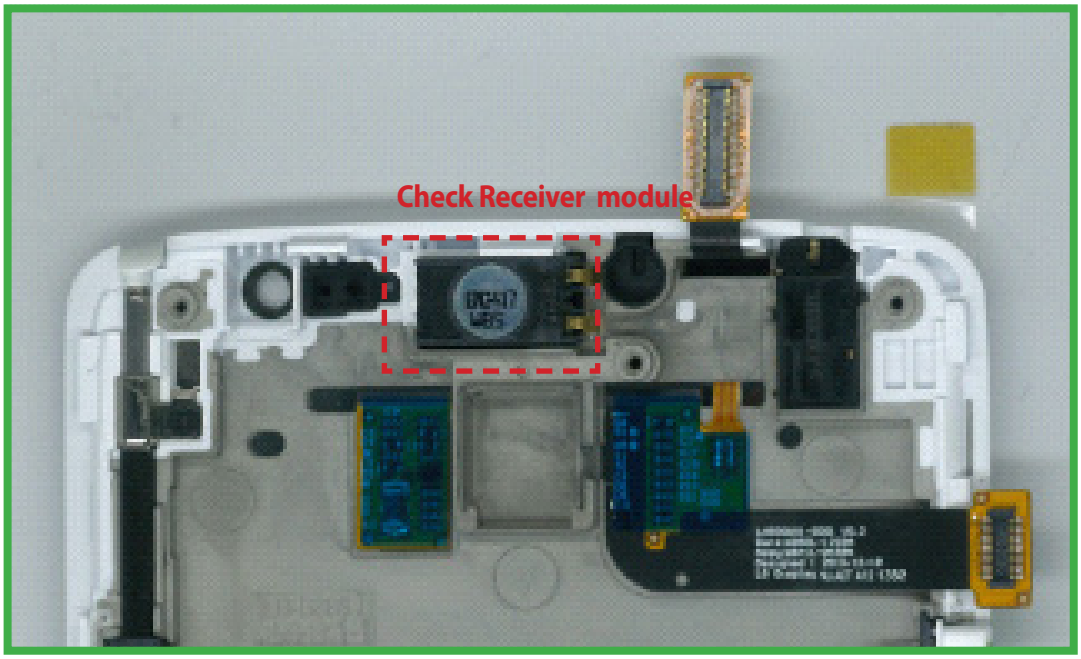

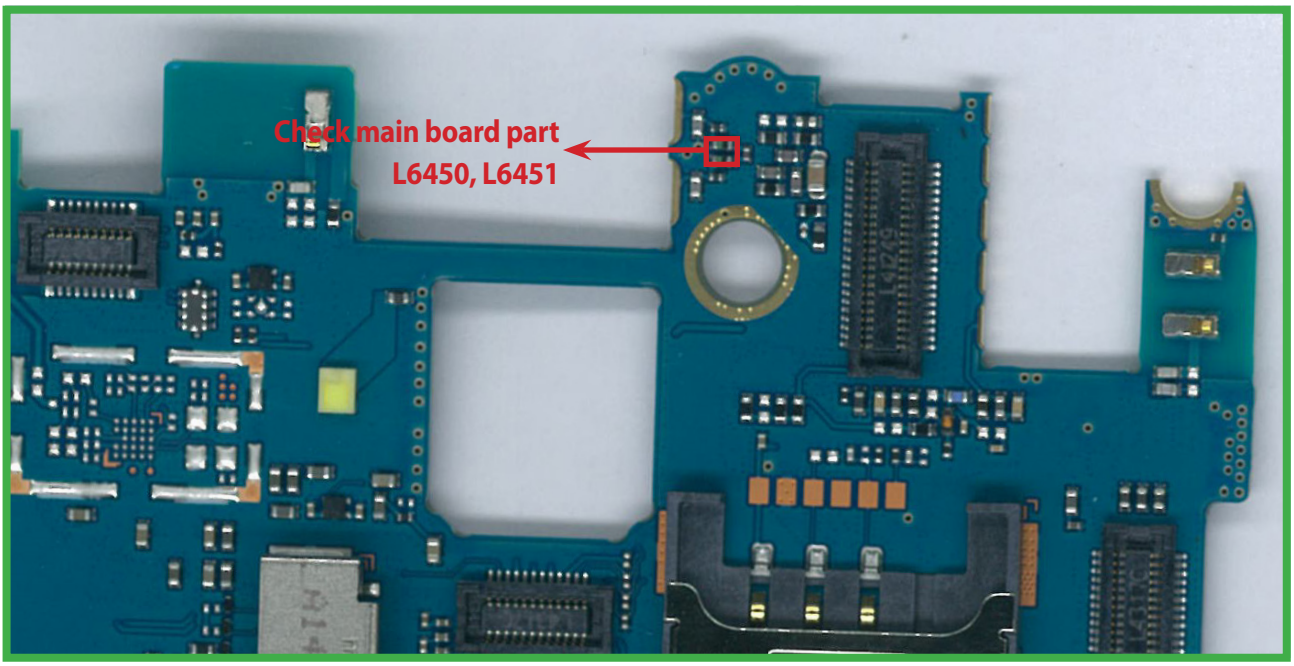

<Main Bot>

In case of No Receiver sound, not only Receiver fault but Mic fault.

You must check first voice recording test. After voice recording you can hear a recording sound, receiver path or parts is something wrong.

3.8.4 Main Mic

Main Mic located on Lower FPCB.

It's operating voice call(except speakerphone), voice recording, camcorder recording

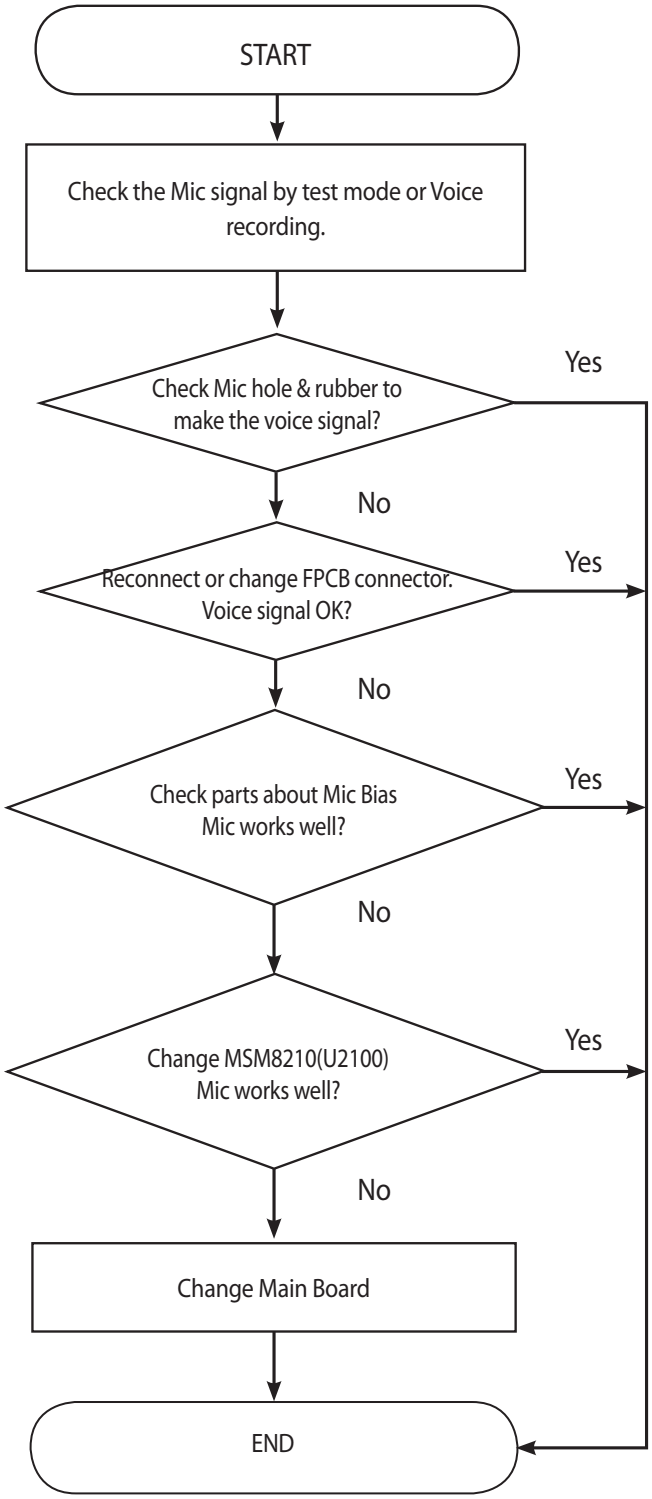

Check Main Mic hole.

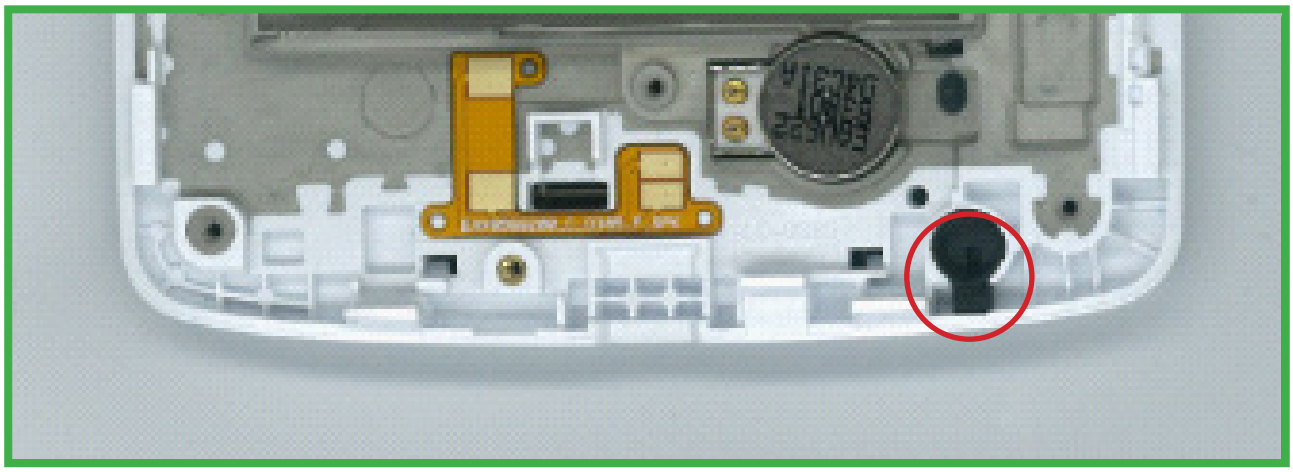

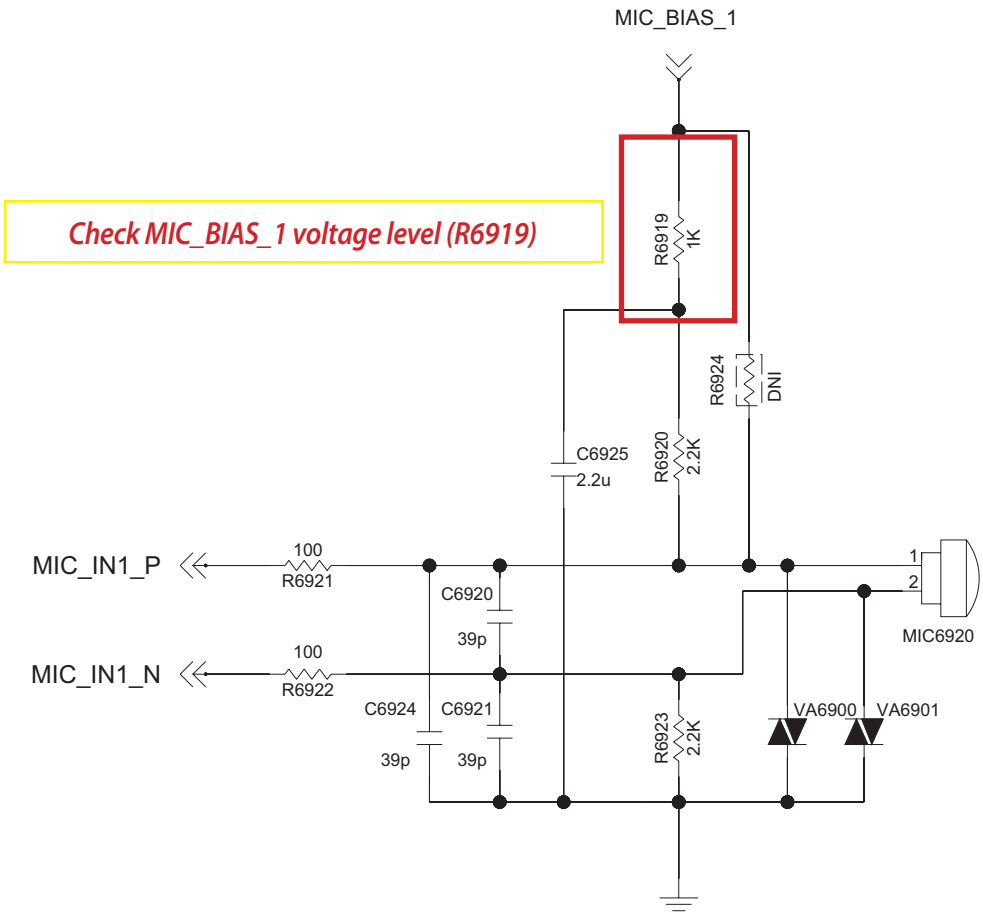

3.8.5 2nd Mic

2nd Mic located on Main PCB Top Side.

It's operating handset voice call and speakerphone.

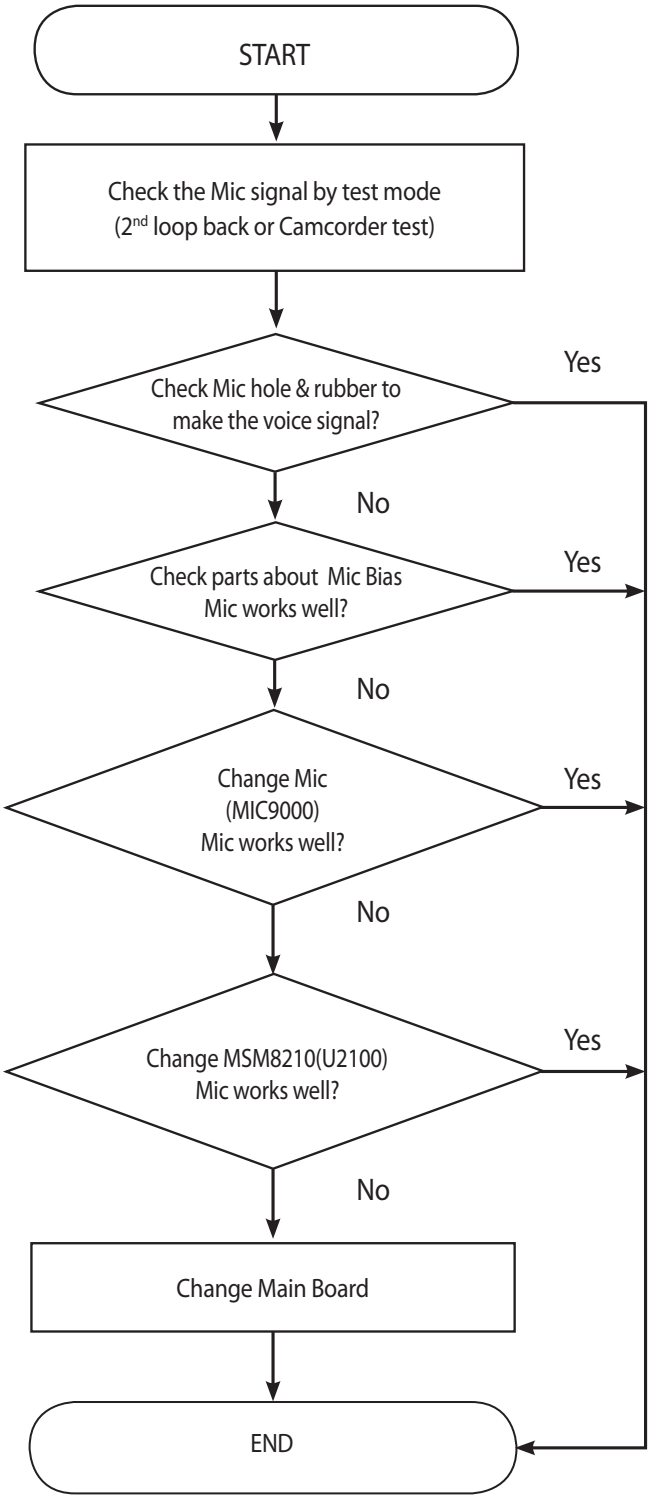

2nd Mic Hole located on Main PCB Top Side..
It's operating handset voice call and speakerphone
In case of Test menu, loopback 2nd Mic test and Camcorder recording.

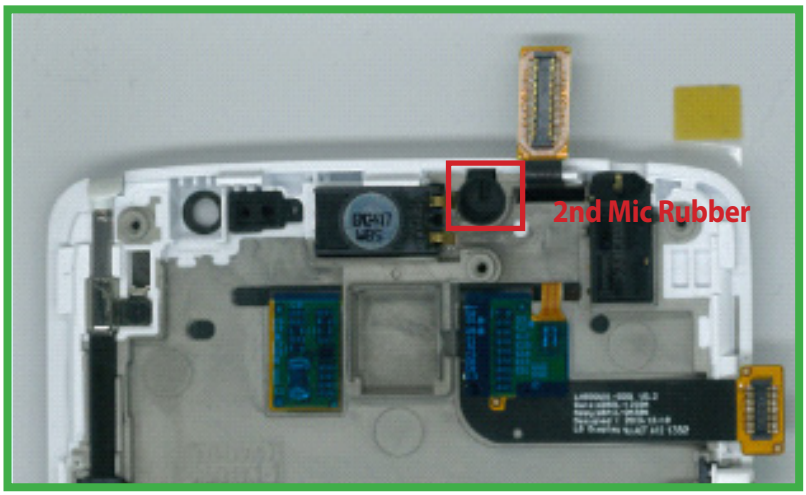

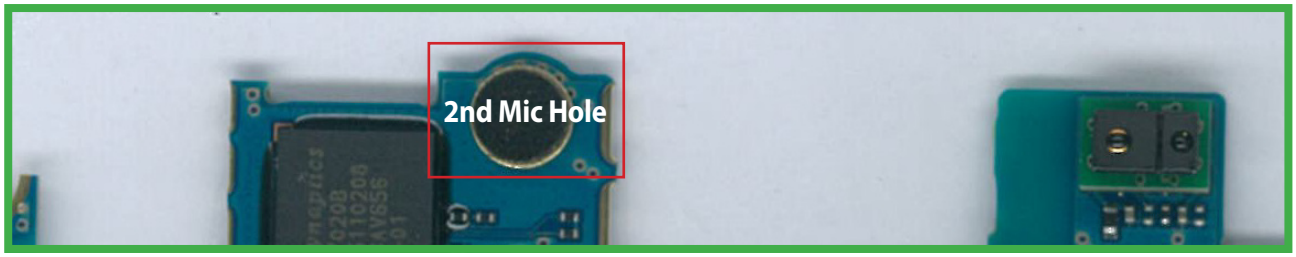

<Main Top>

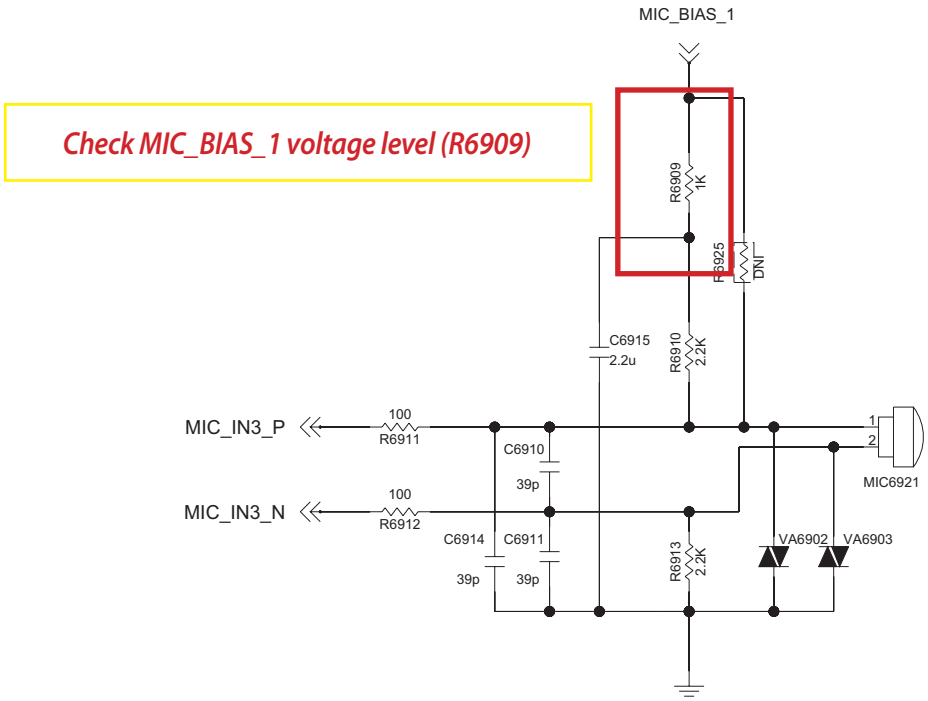

3.8.6 Ear-Mic Trouble Shooting

Ear MIC control signals are generate by MSM8210(U2100)

Case A. Disable detected headset insert.

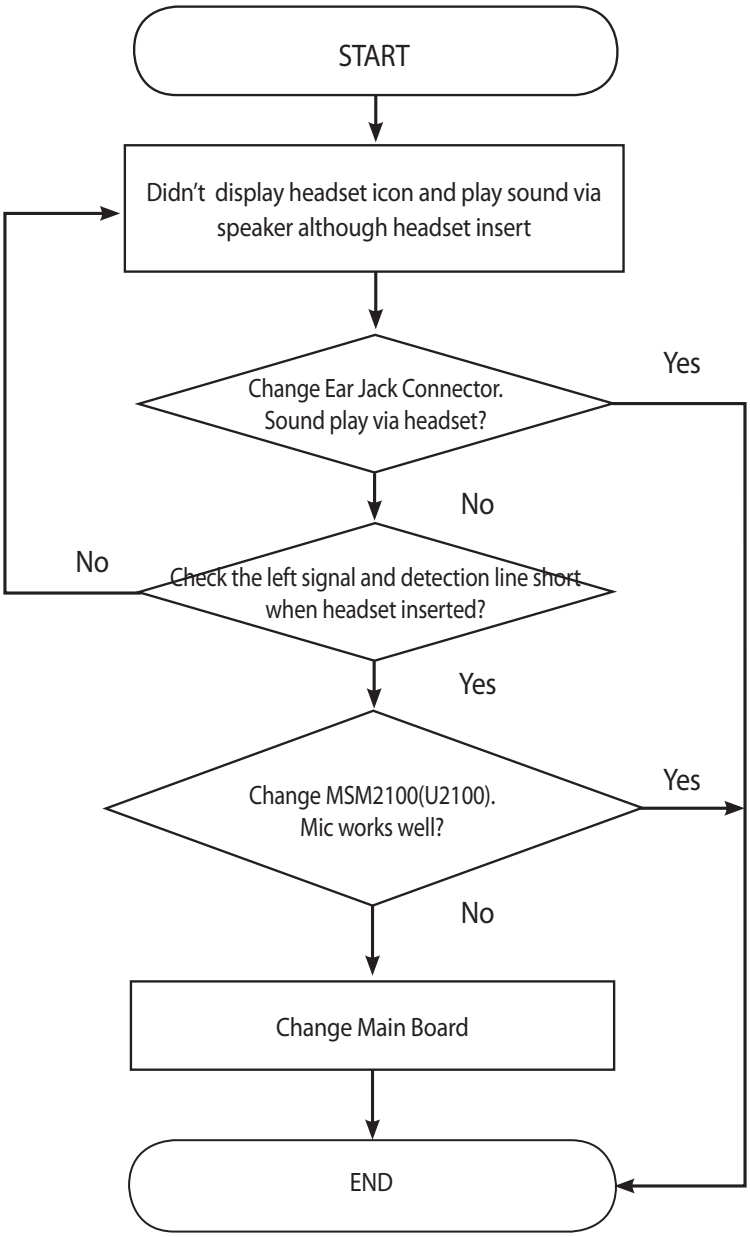

Case A. Disable detected headset insert.

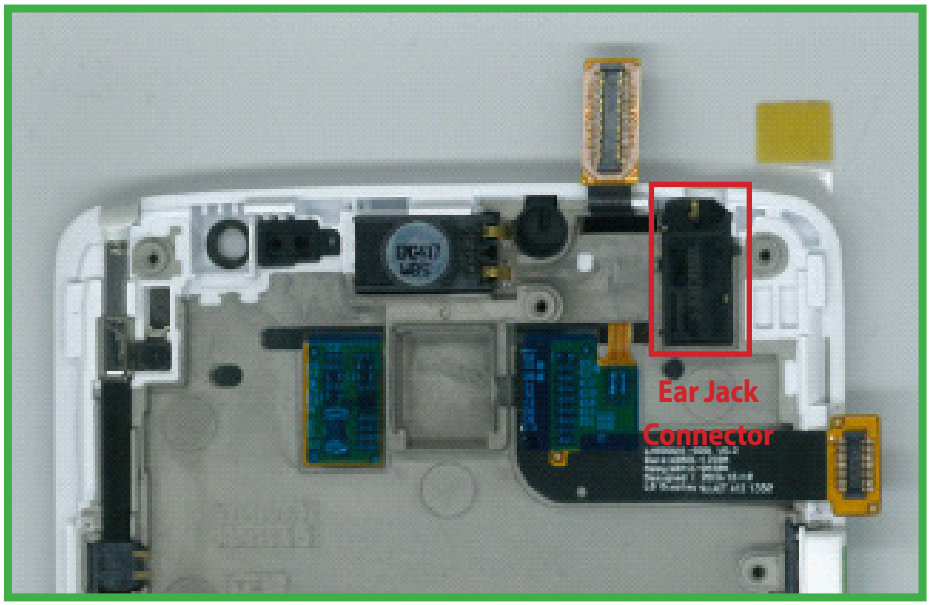

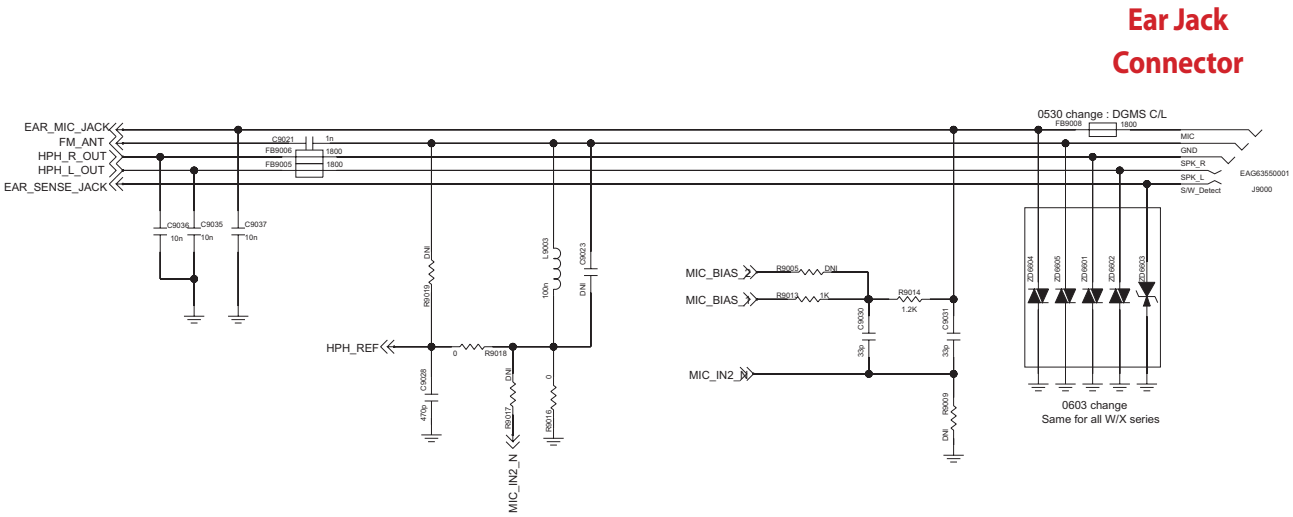

Case B. No Sound from Headset

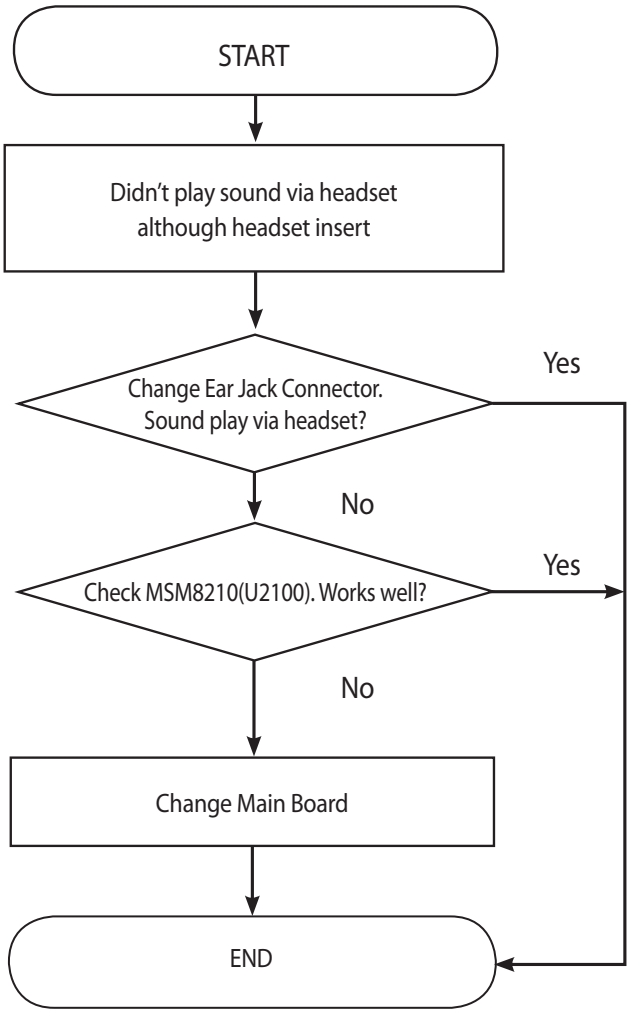

Case B. No Sound from Headset

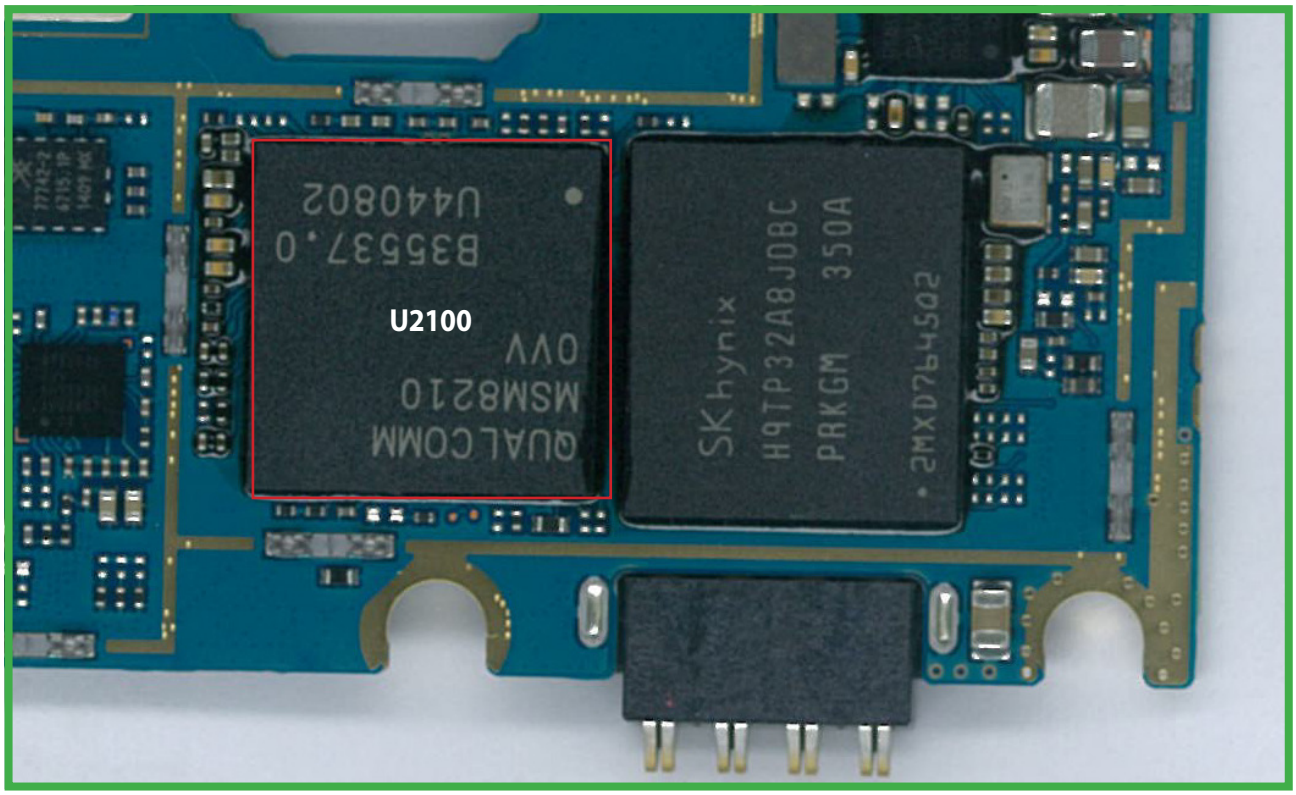

<Main Top>

3.9 6 AXIS Sensor on/off TS

The 6 AXIS sensor is calibrated by the sensor data using SW algorithm.
Therefore sensor error makes the compass sensor malfunction.

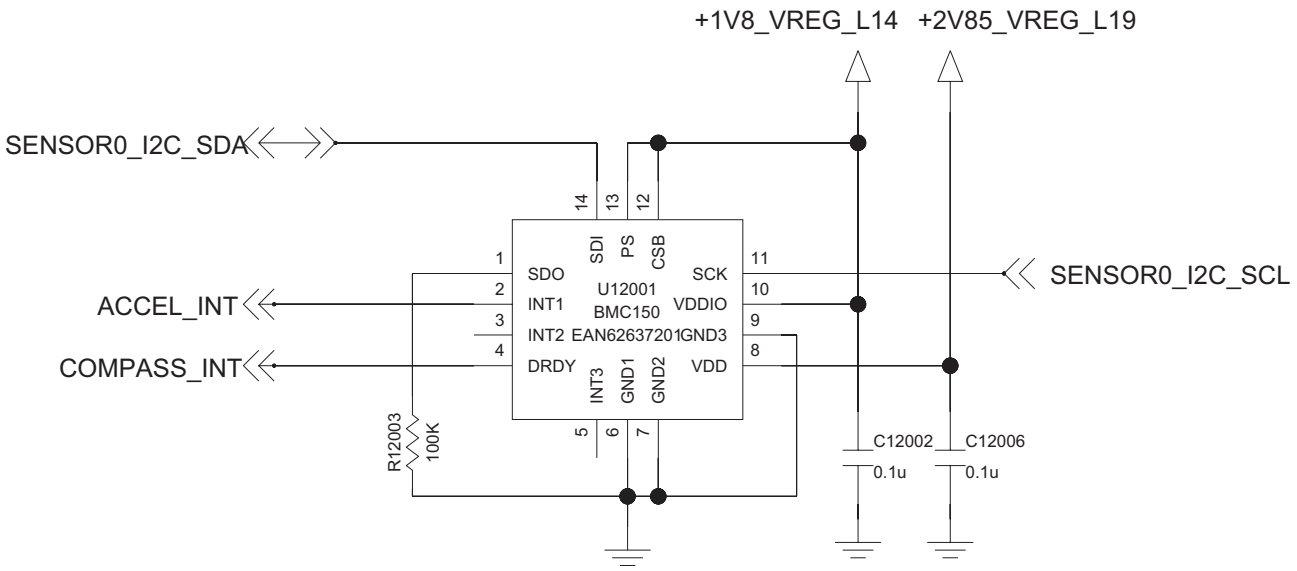

6 AXIS Sensor

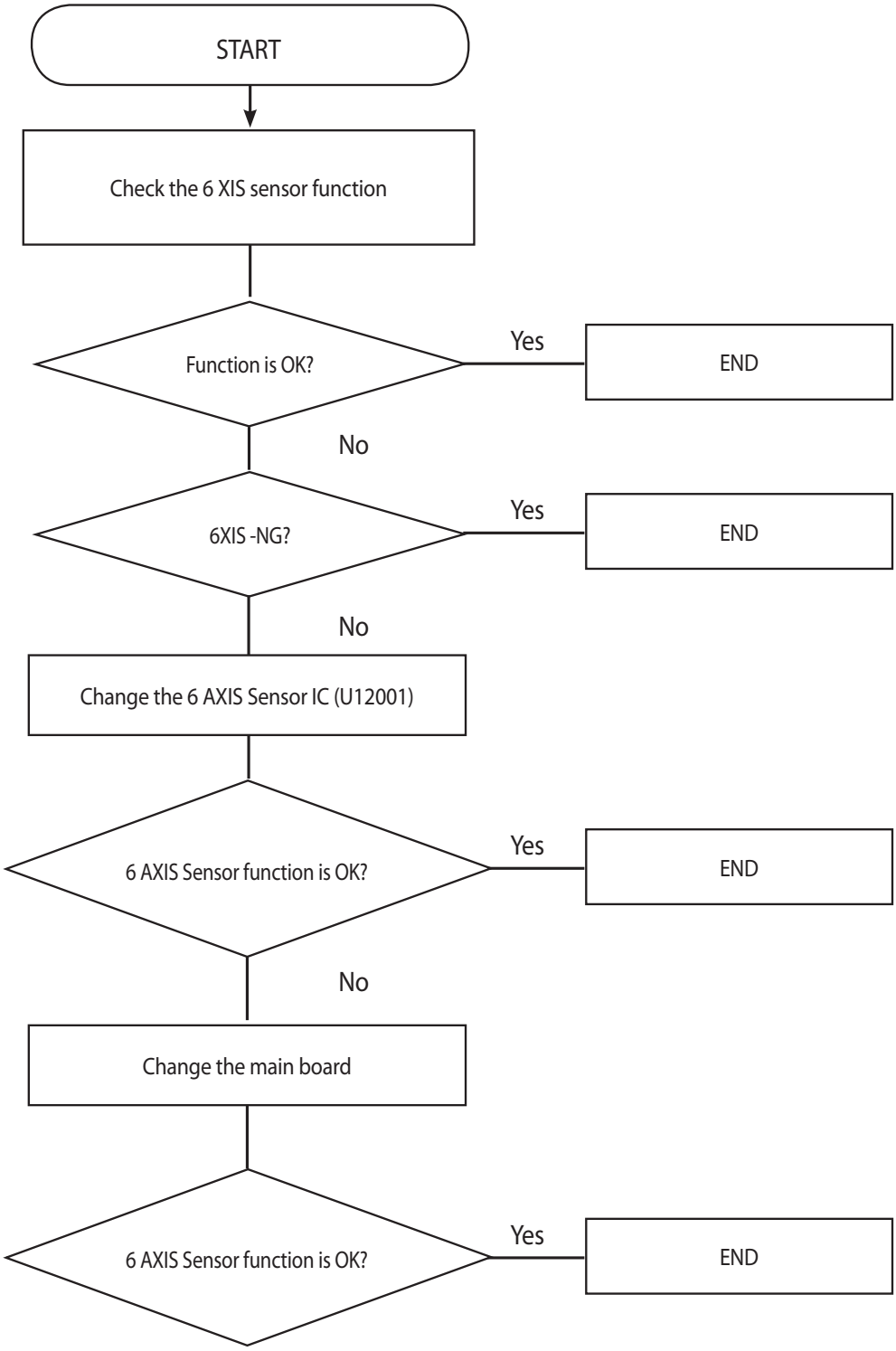

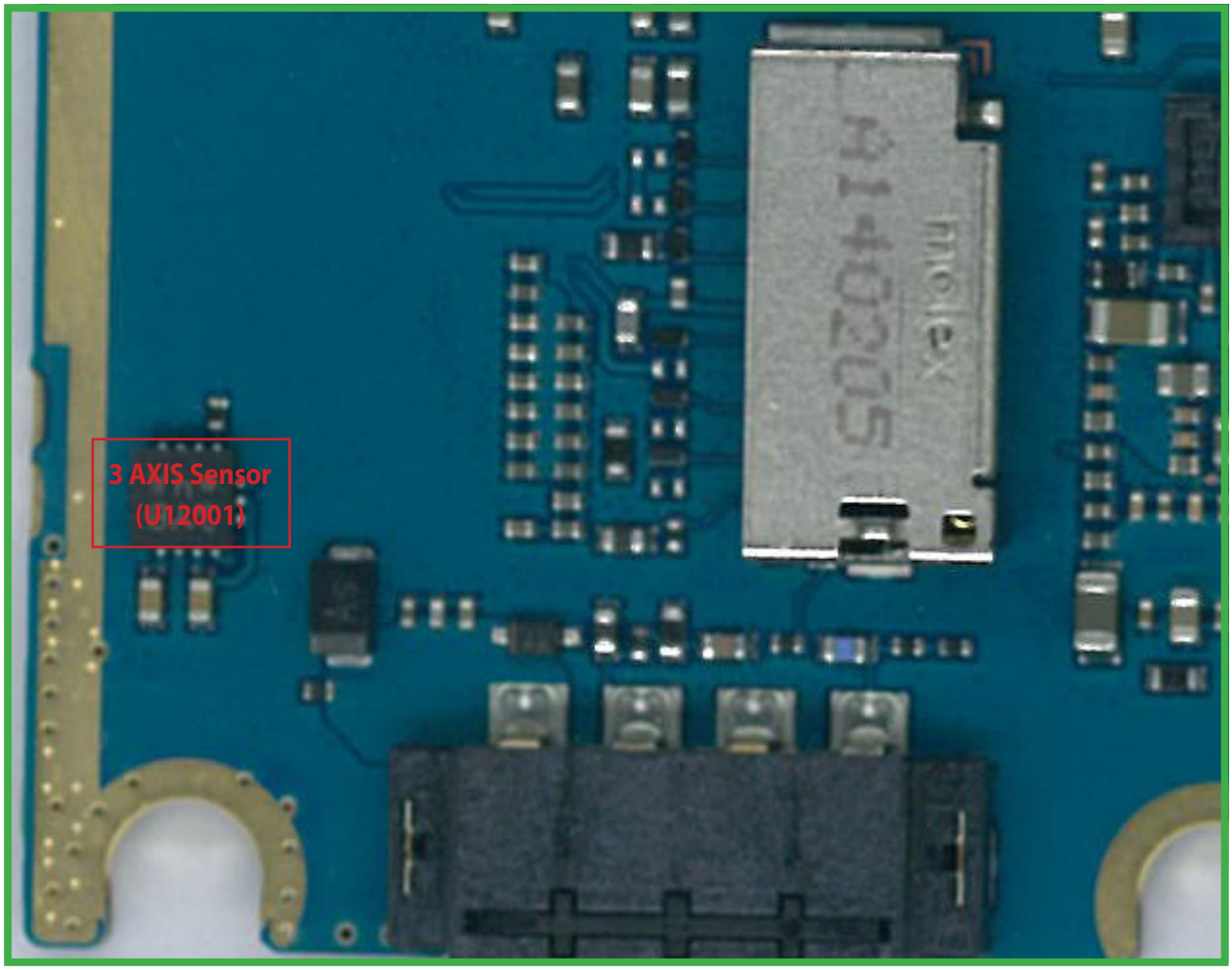

<Main Bot>

3.10 Proximity Sensor on/off TS

Proximity Sensor is worked as below:

Send Key click -> Phone number click -> Call connected -> Object moved at the sensor -> Control the screen's on/off operation automatically

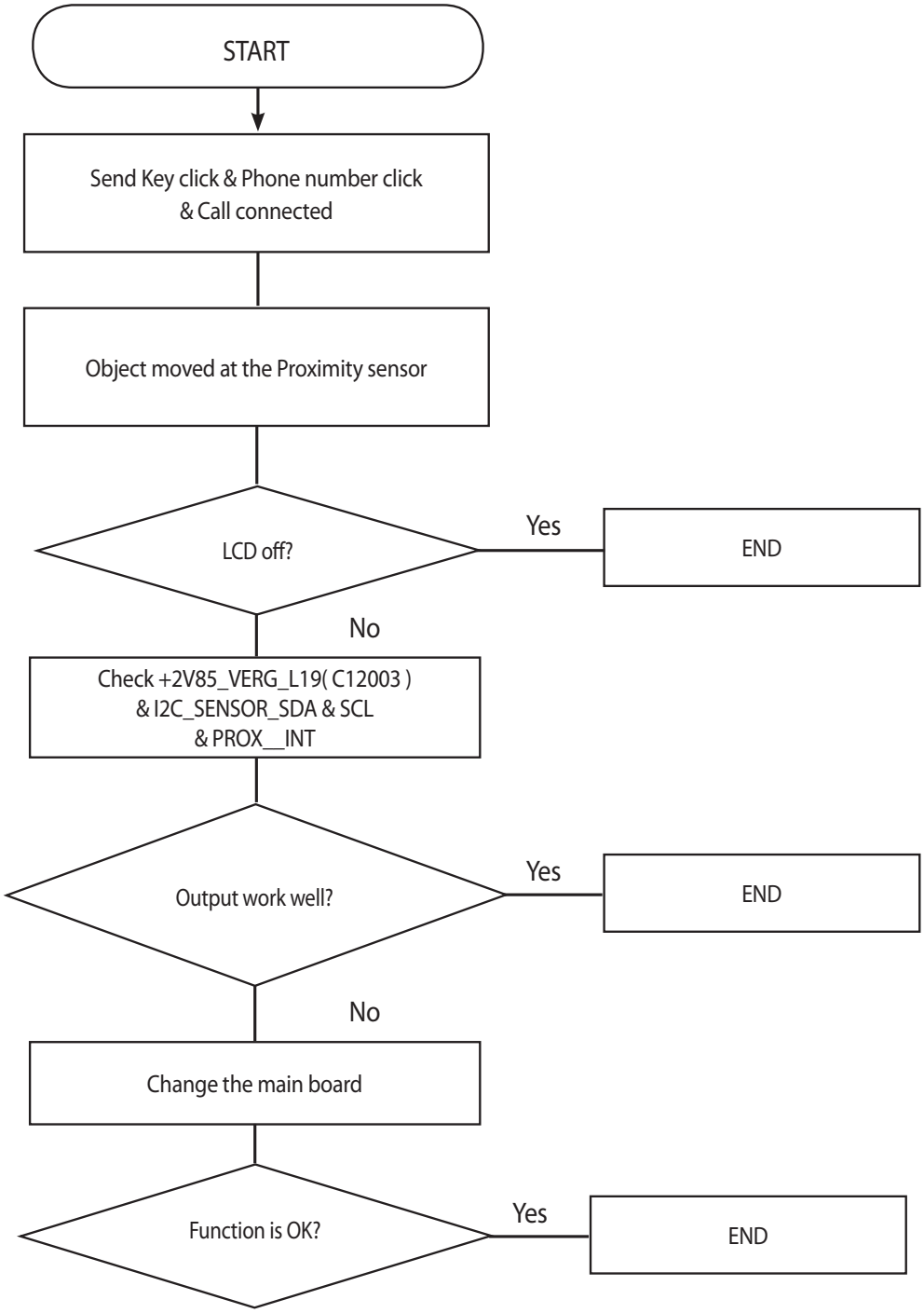

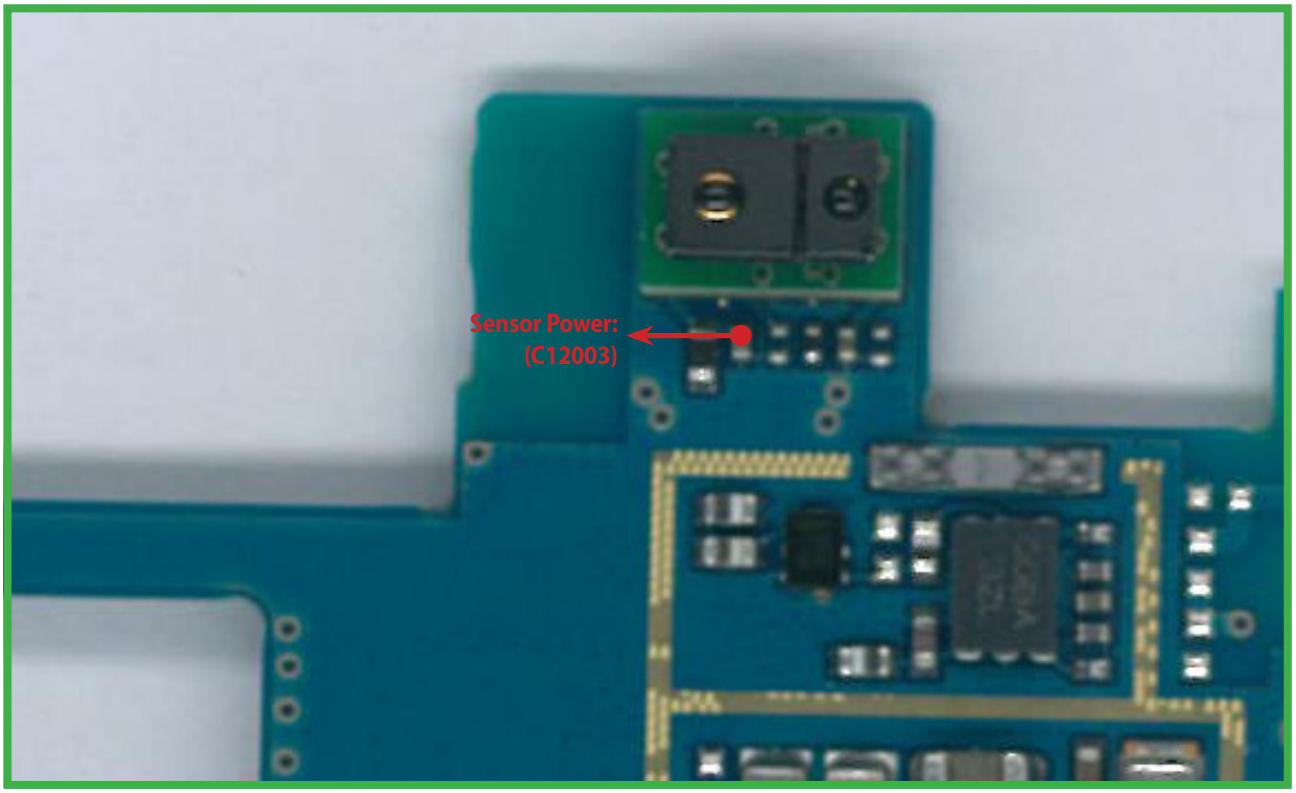

<Main Top>

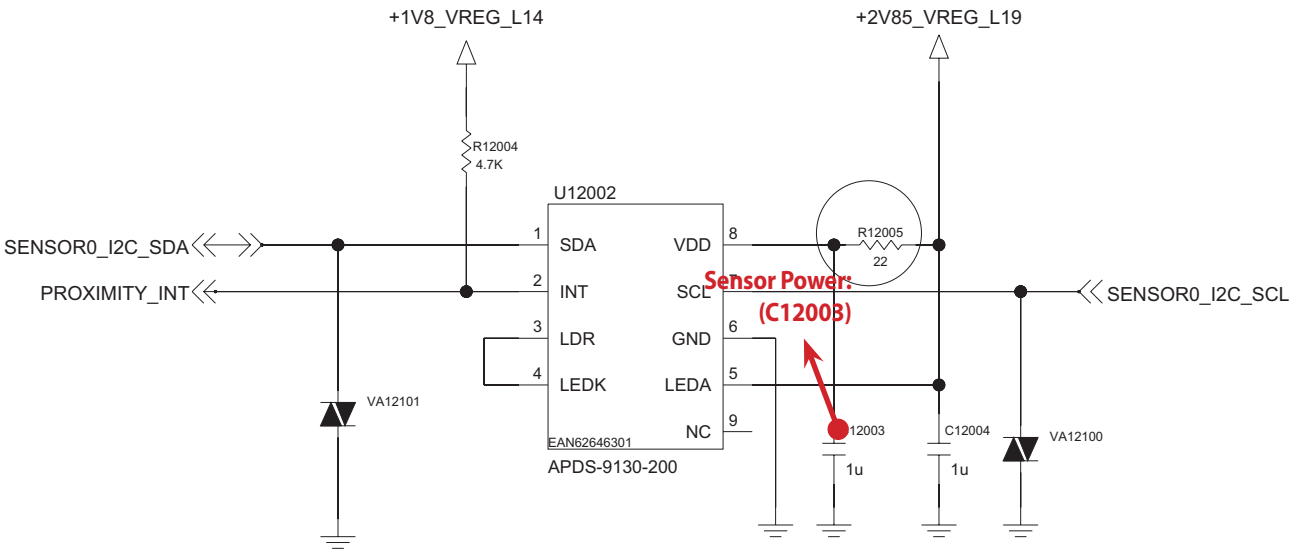

3.11 Touch Sensor Trouble Shooting

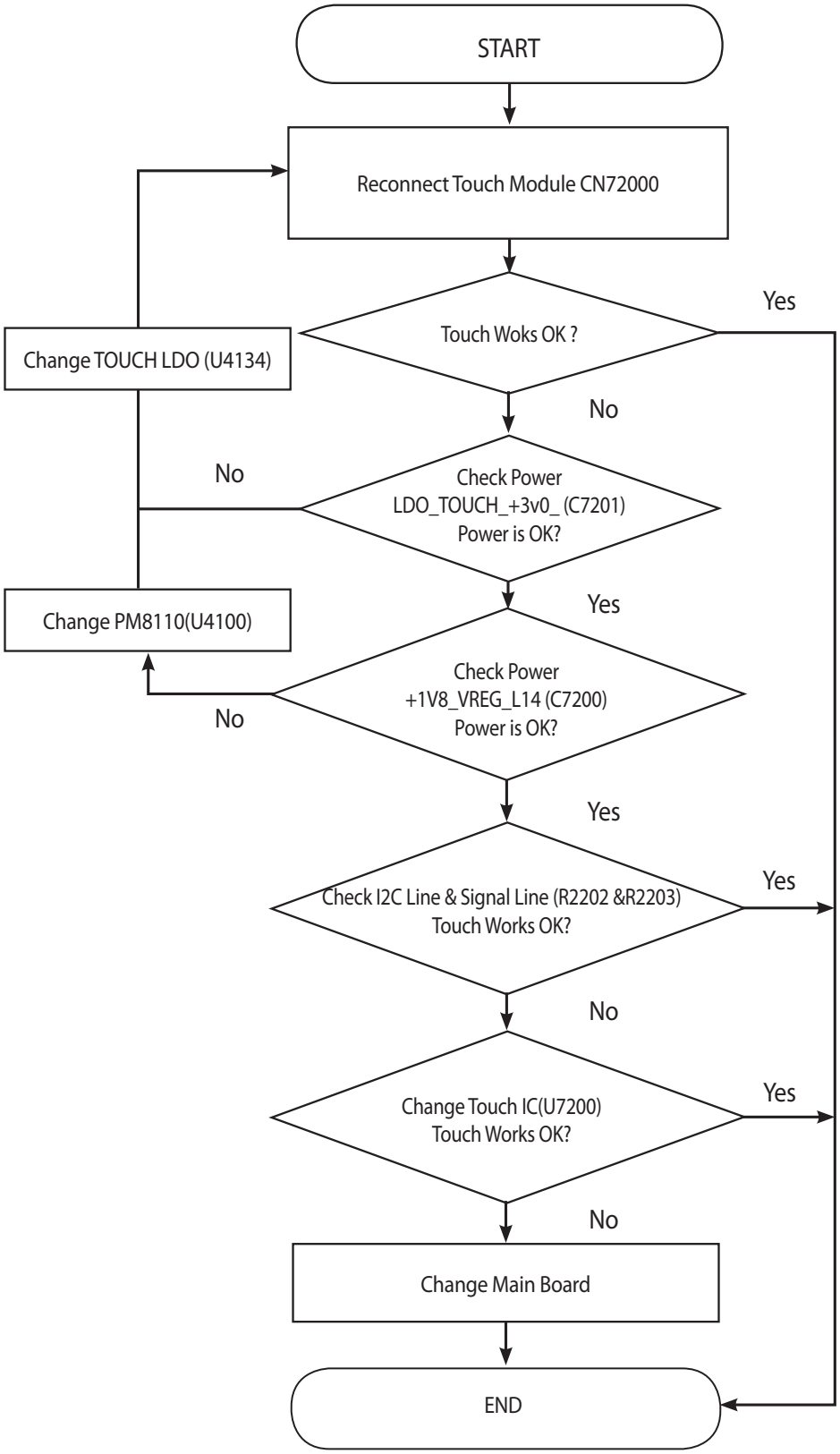

3.12 Vibrator Trouble Shooting

Vibrator signal path is PM8110(U4100) -> Vibrator. Motor Type is DC Motor

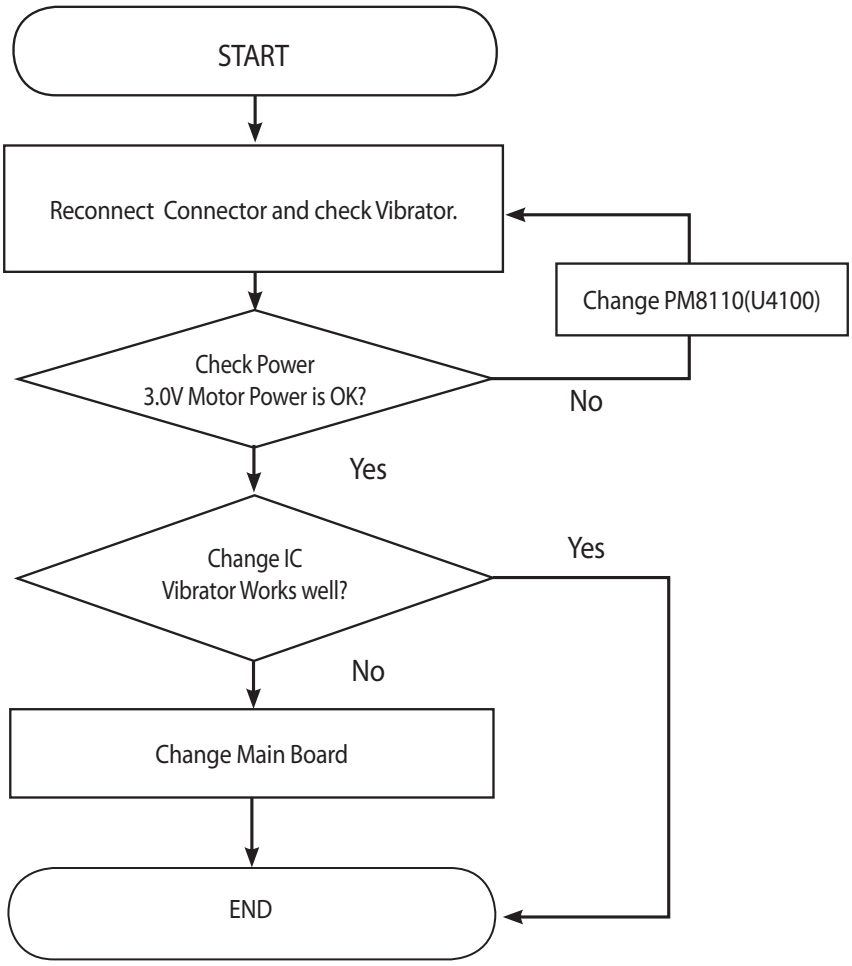

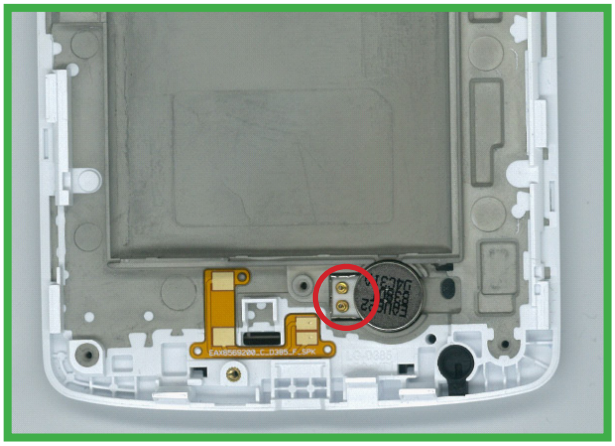

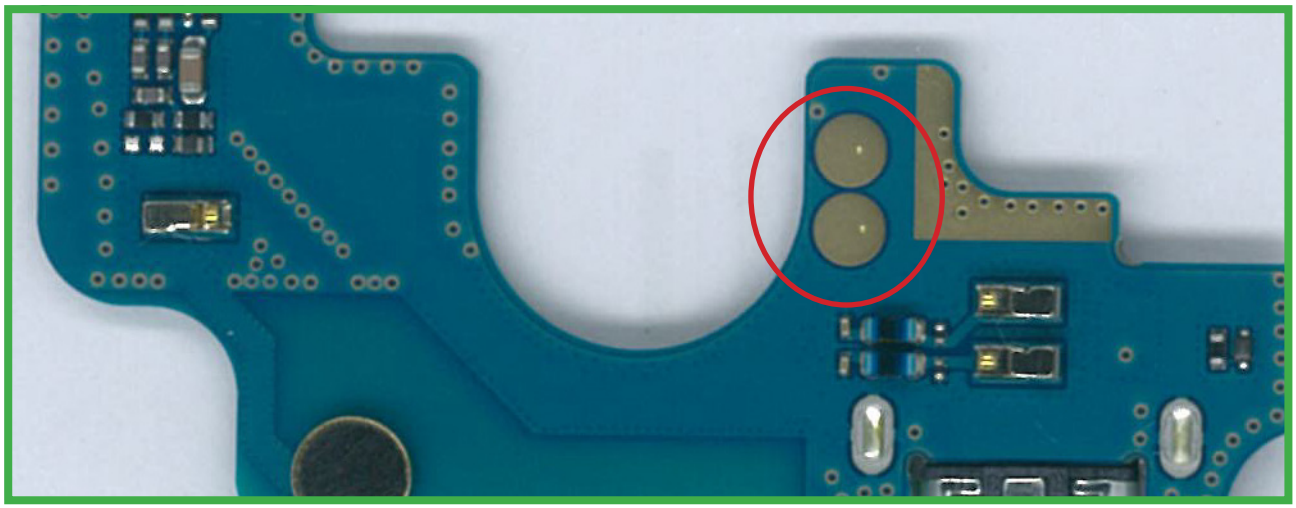

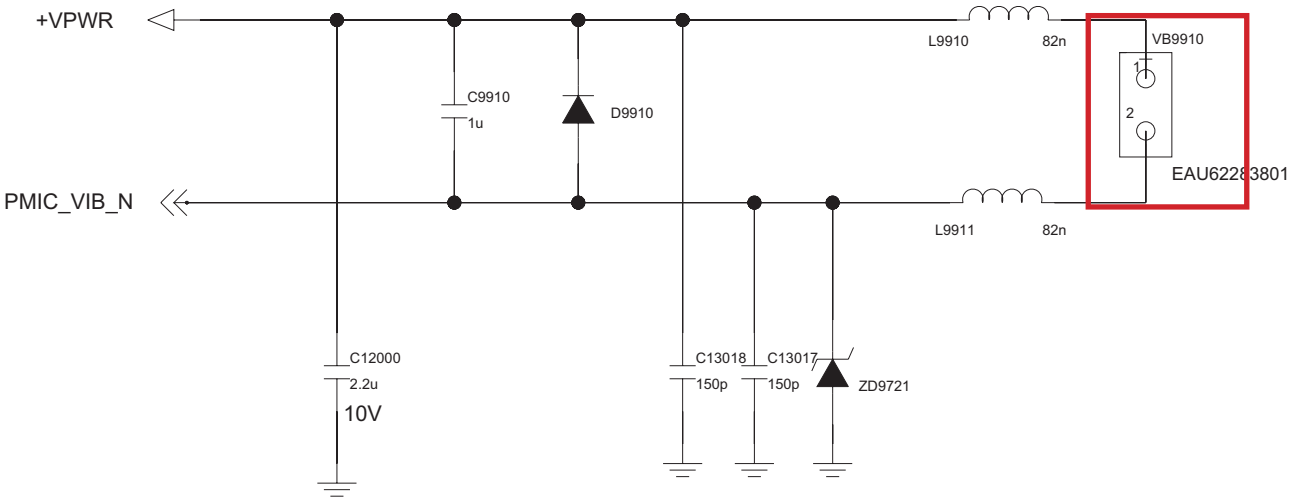

Motor

3.13 8M Main Camera TS

8M camera control signals are generated by voltage regulator (U4136 : LDO) and powered by PM8110(U4100 : Main Chipset).

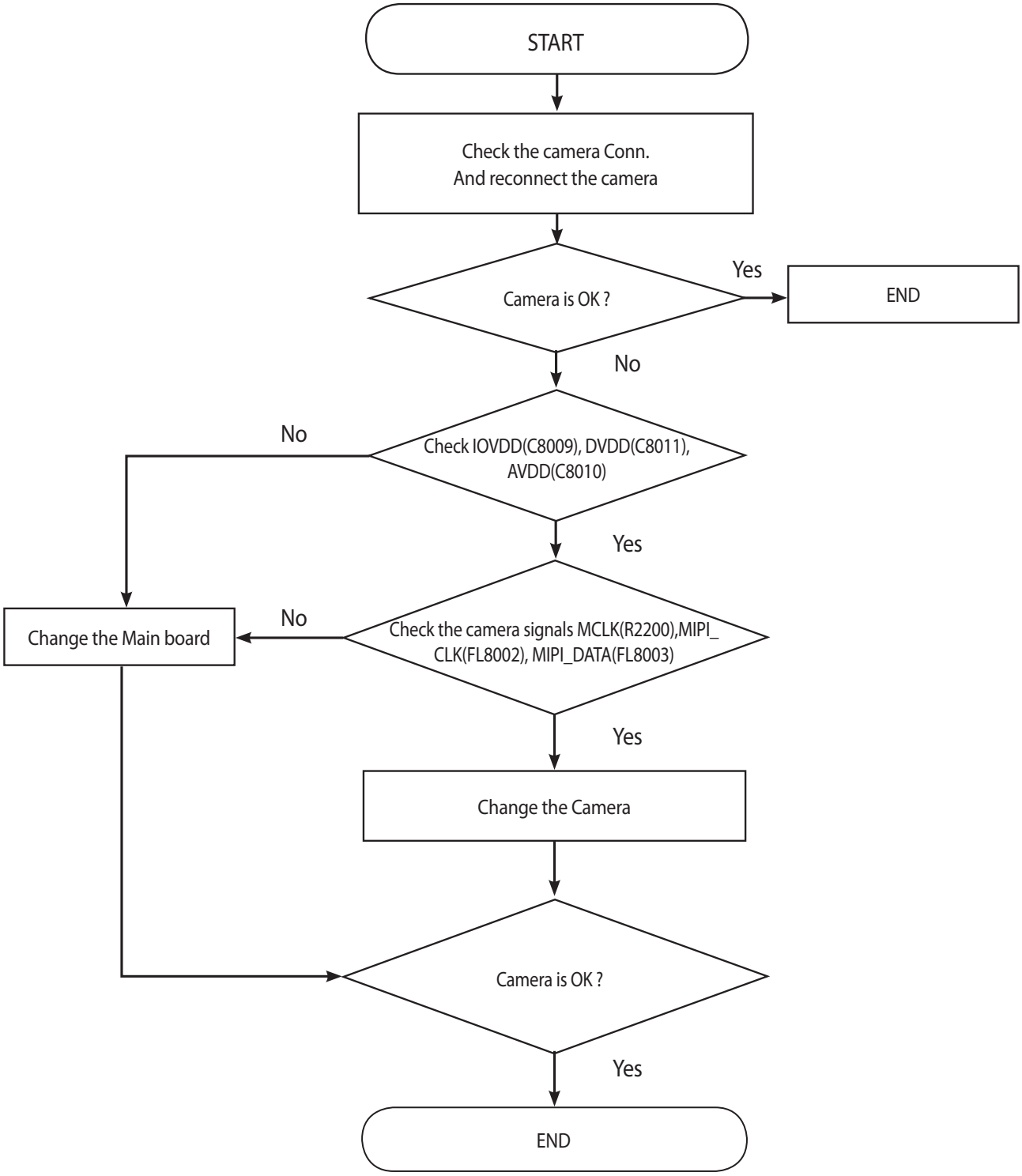

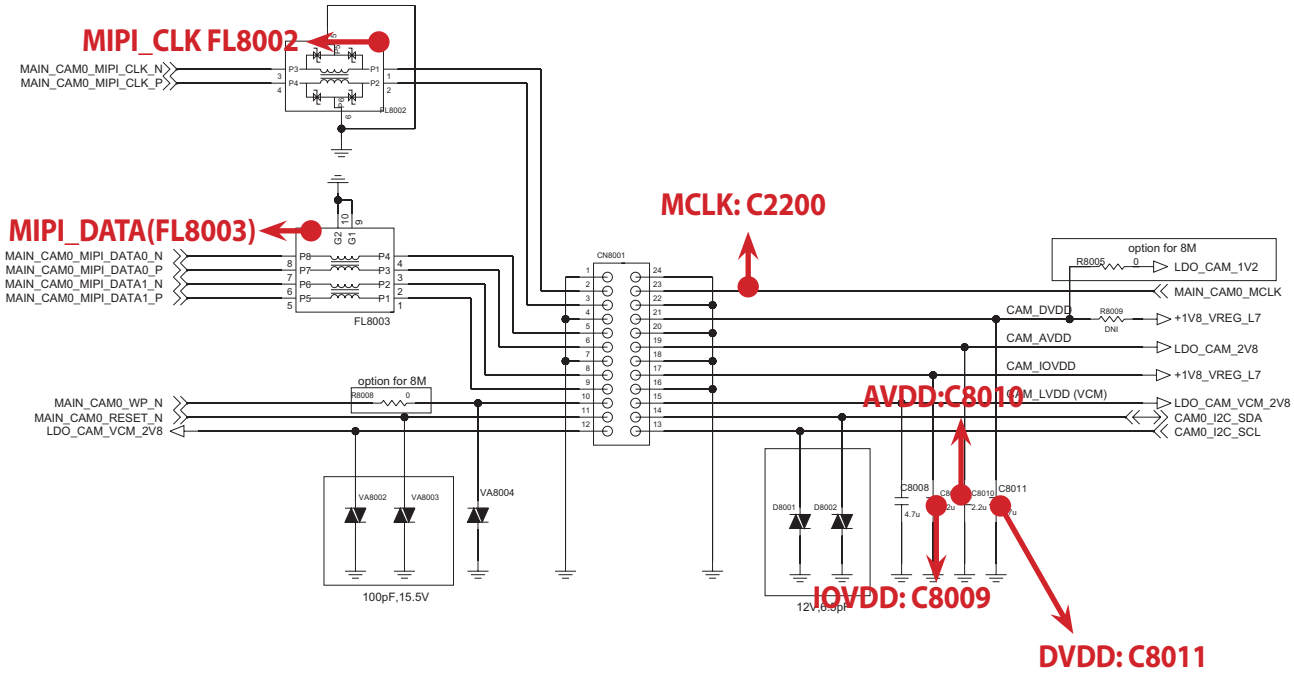

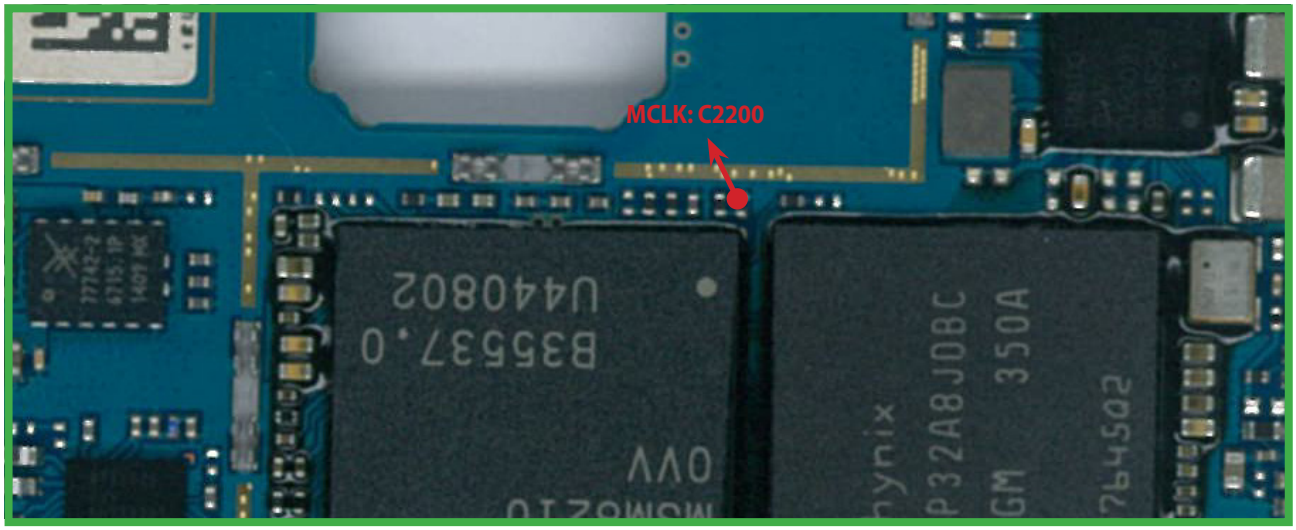

<Main Top>

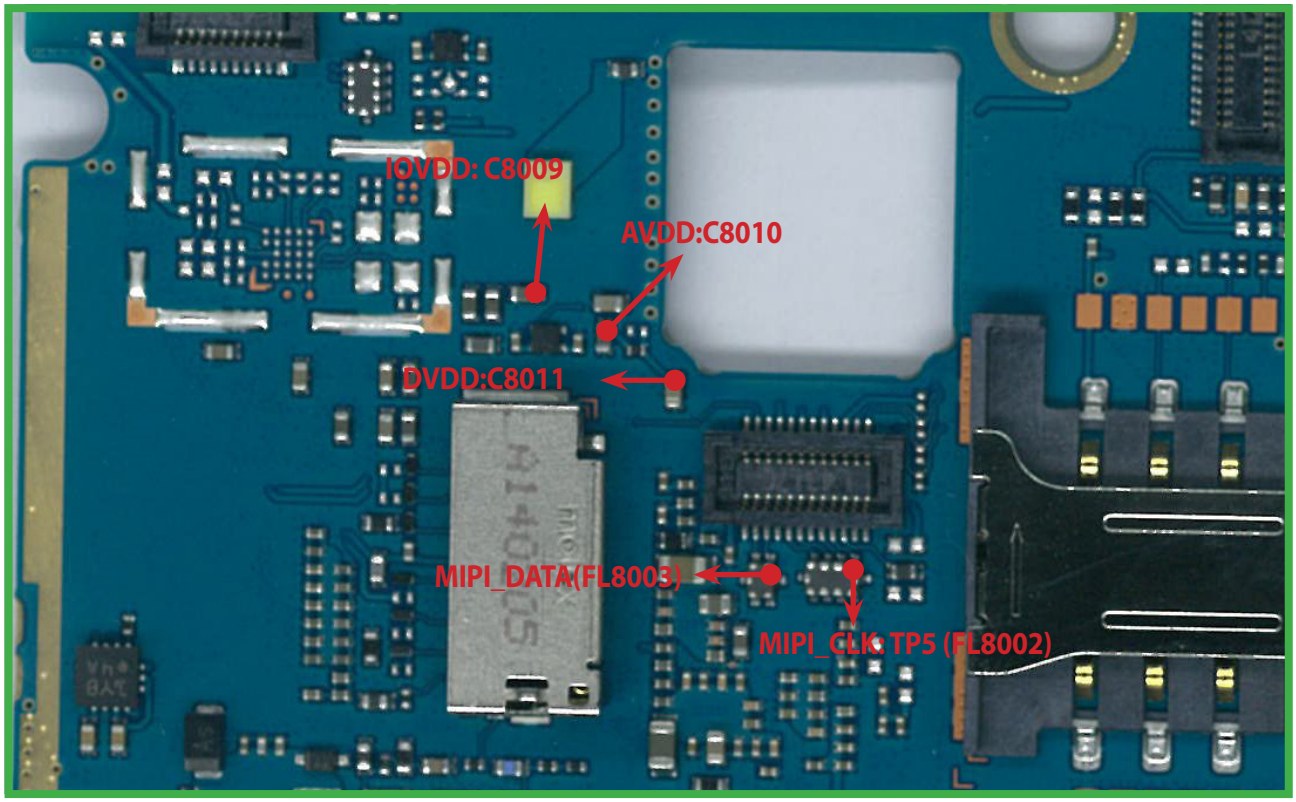

<Main Bot>

3.14 Main LCD TS

The LCD control signals are generated by MSM8210. It needs two external powers like +1.8V_VREG_L14 and +2.85V_VREG_L19. And its interface is MIPI having two data lanes and one clock lane.

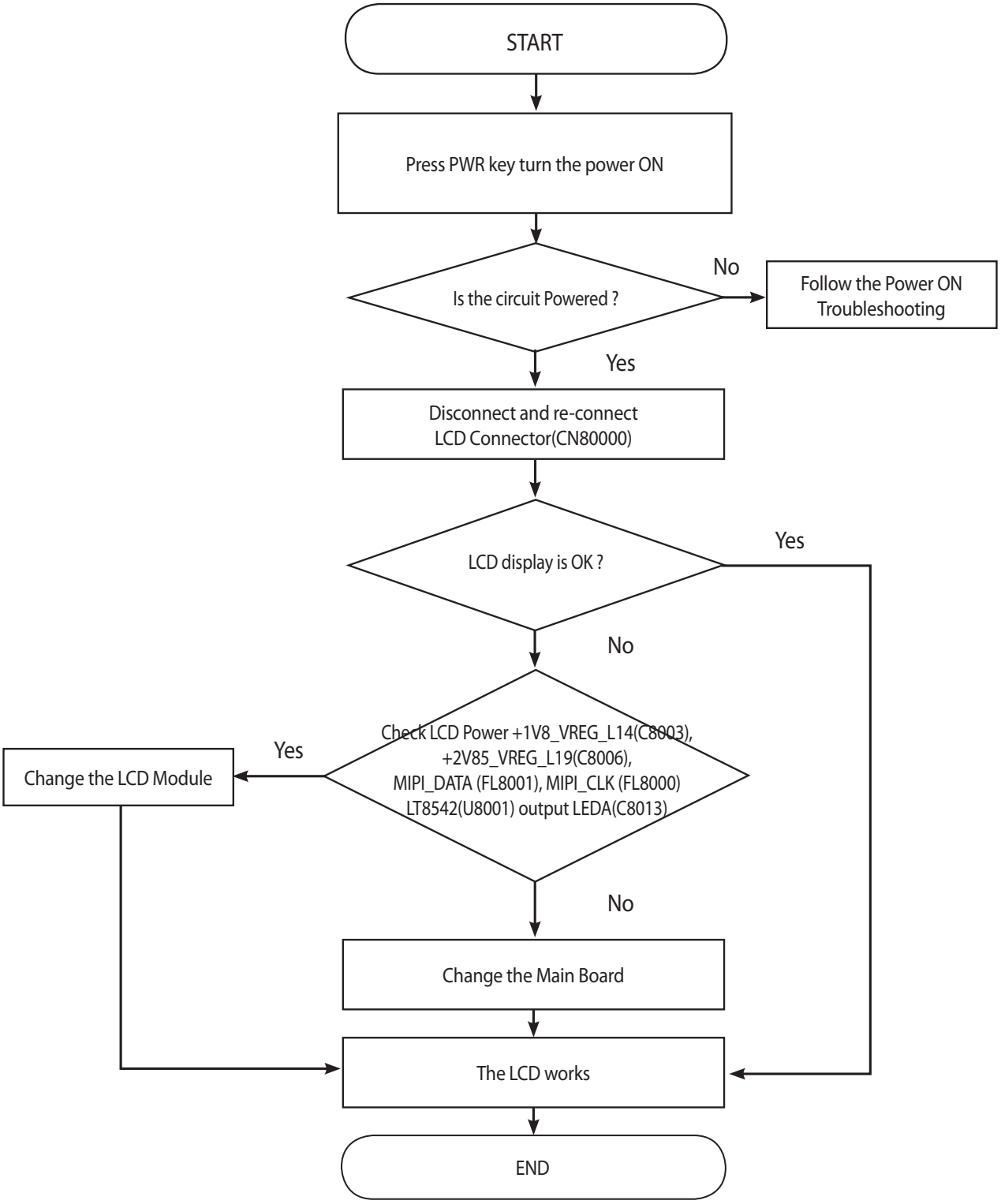

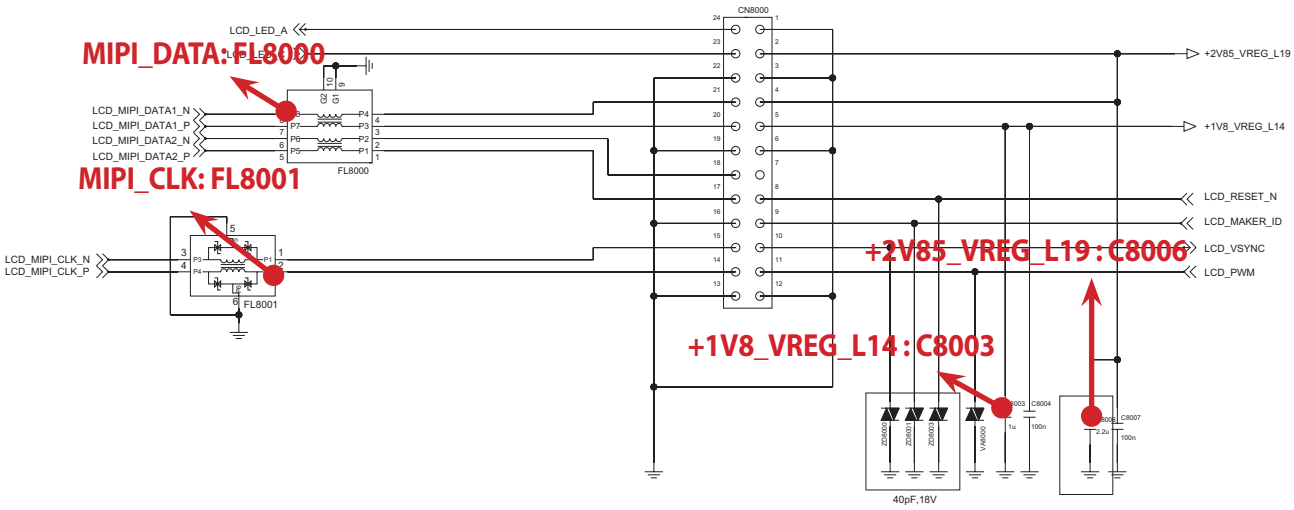

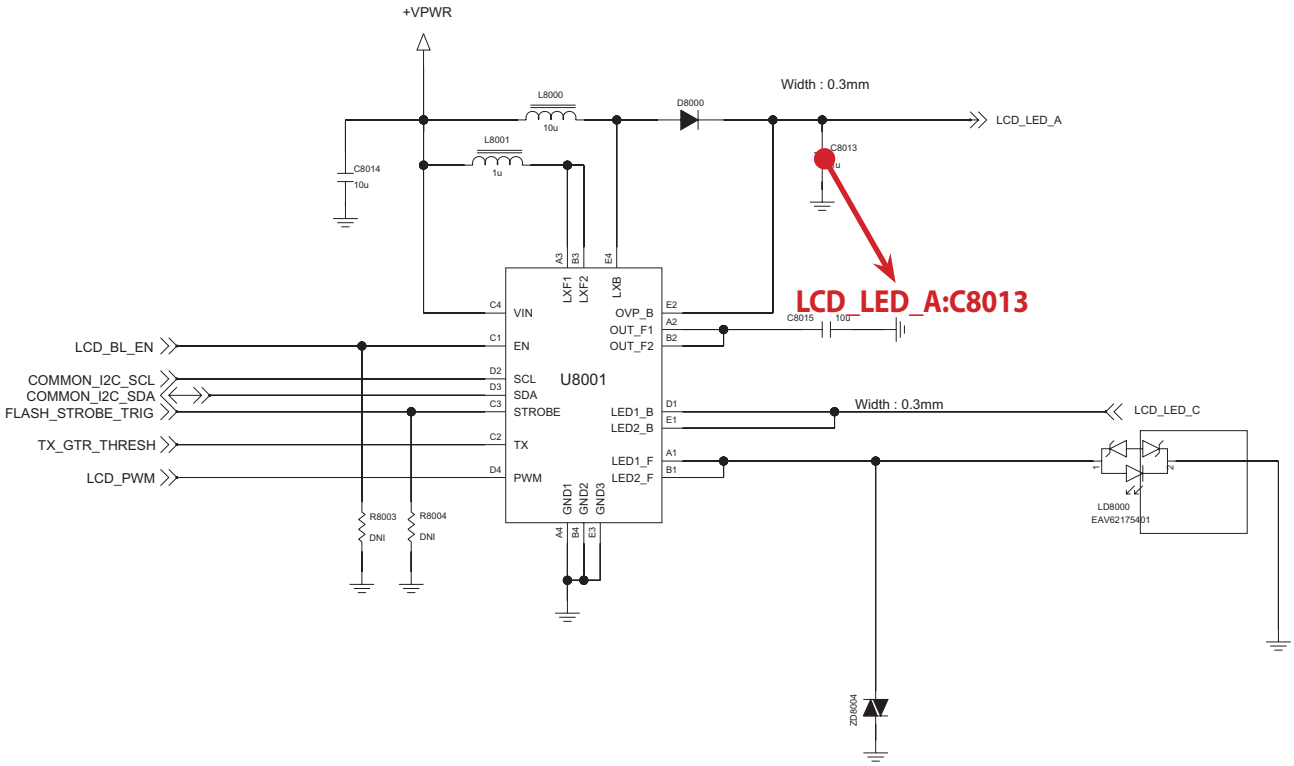

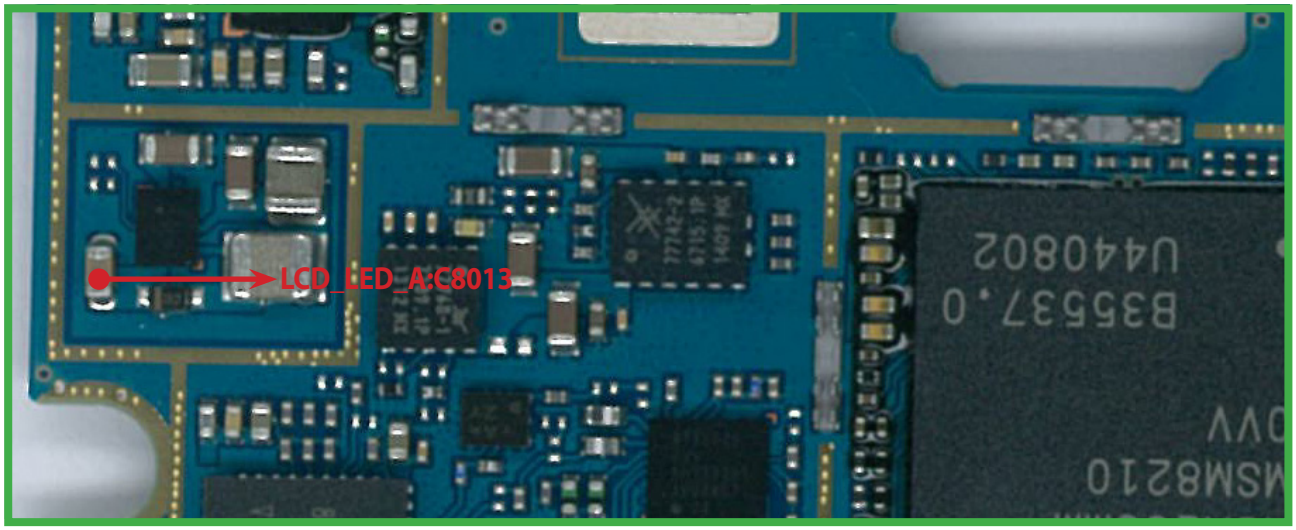

<Main Top>

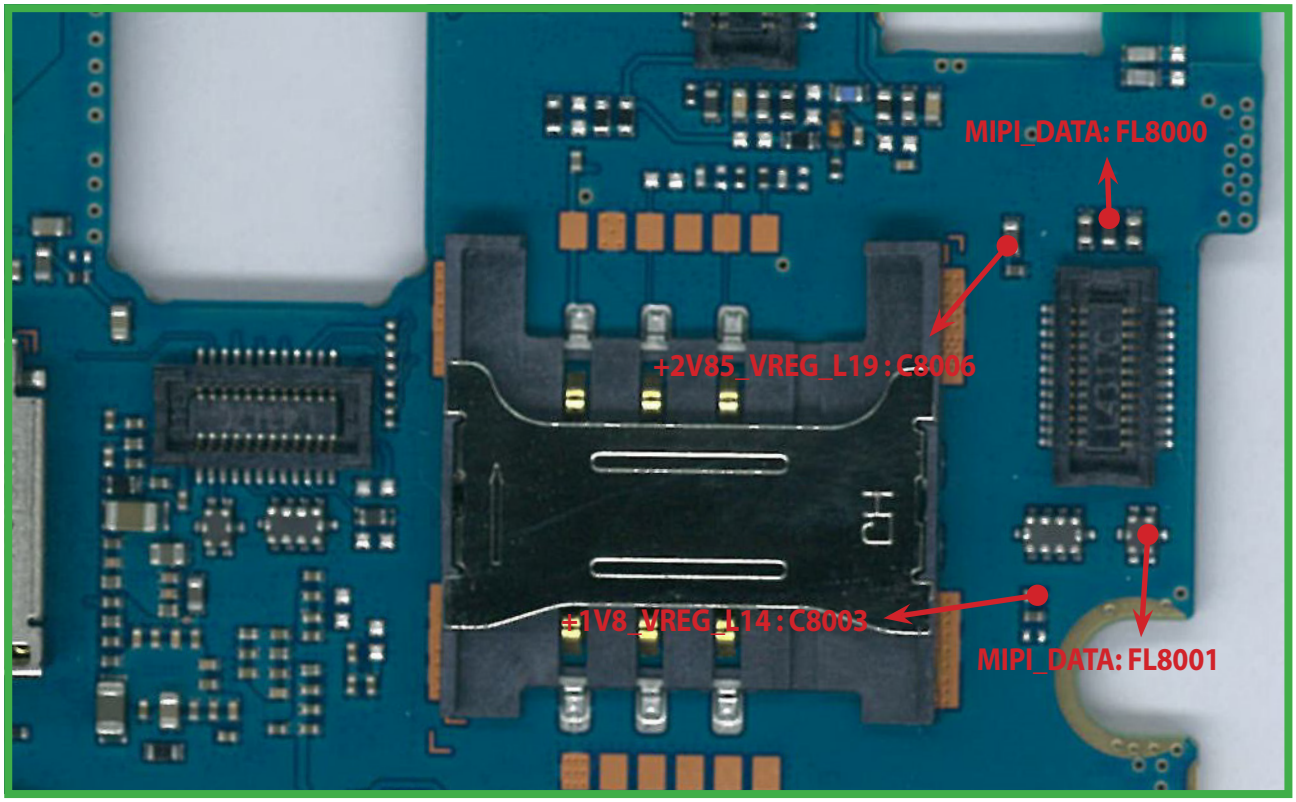

<Main Bot>

3.15 BT/Wifi TS

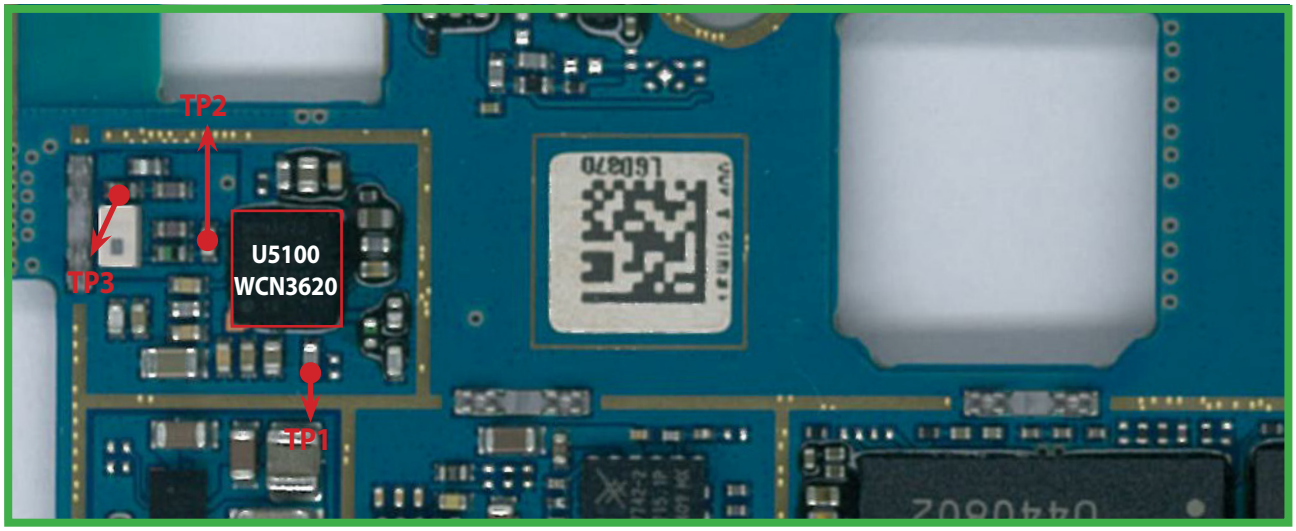

<Main Top>

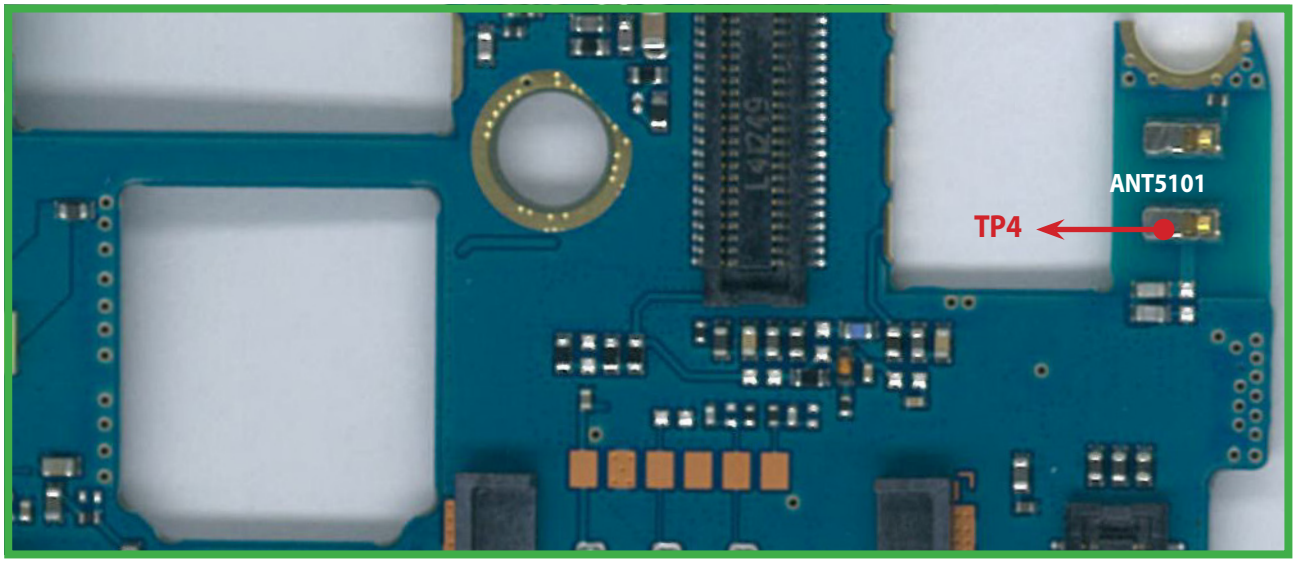

<Main Bot>

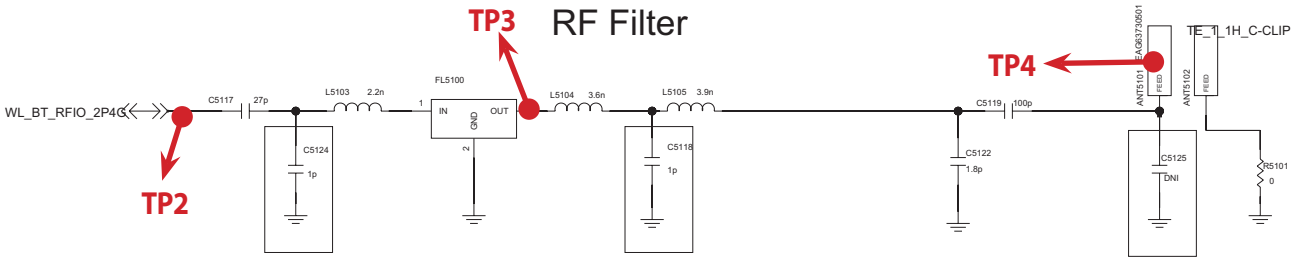

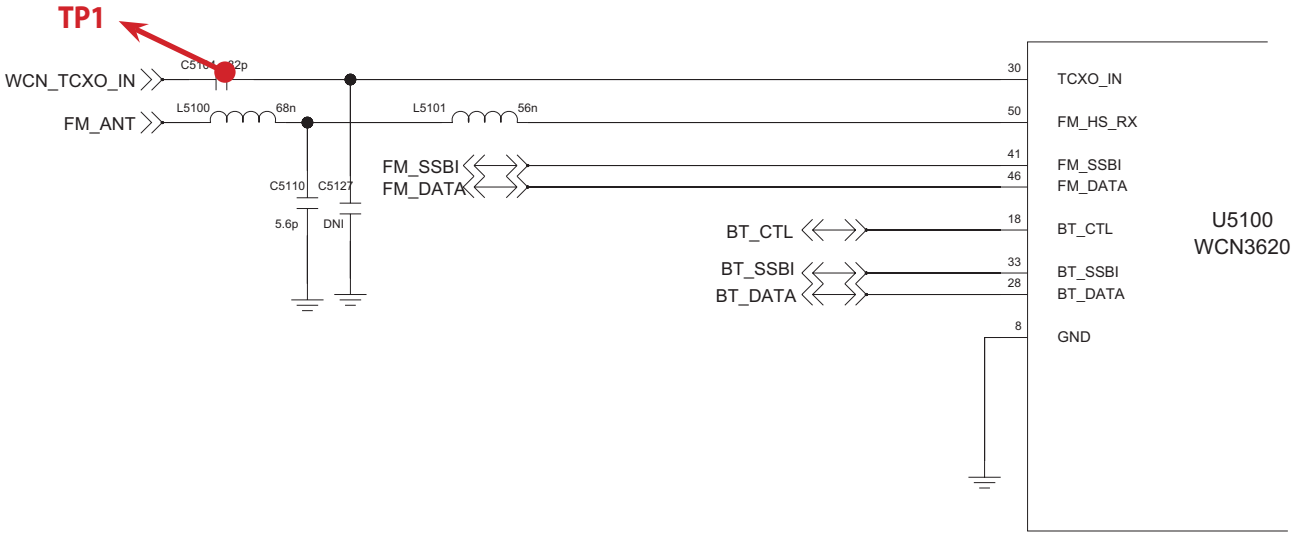

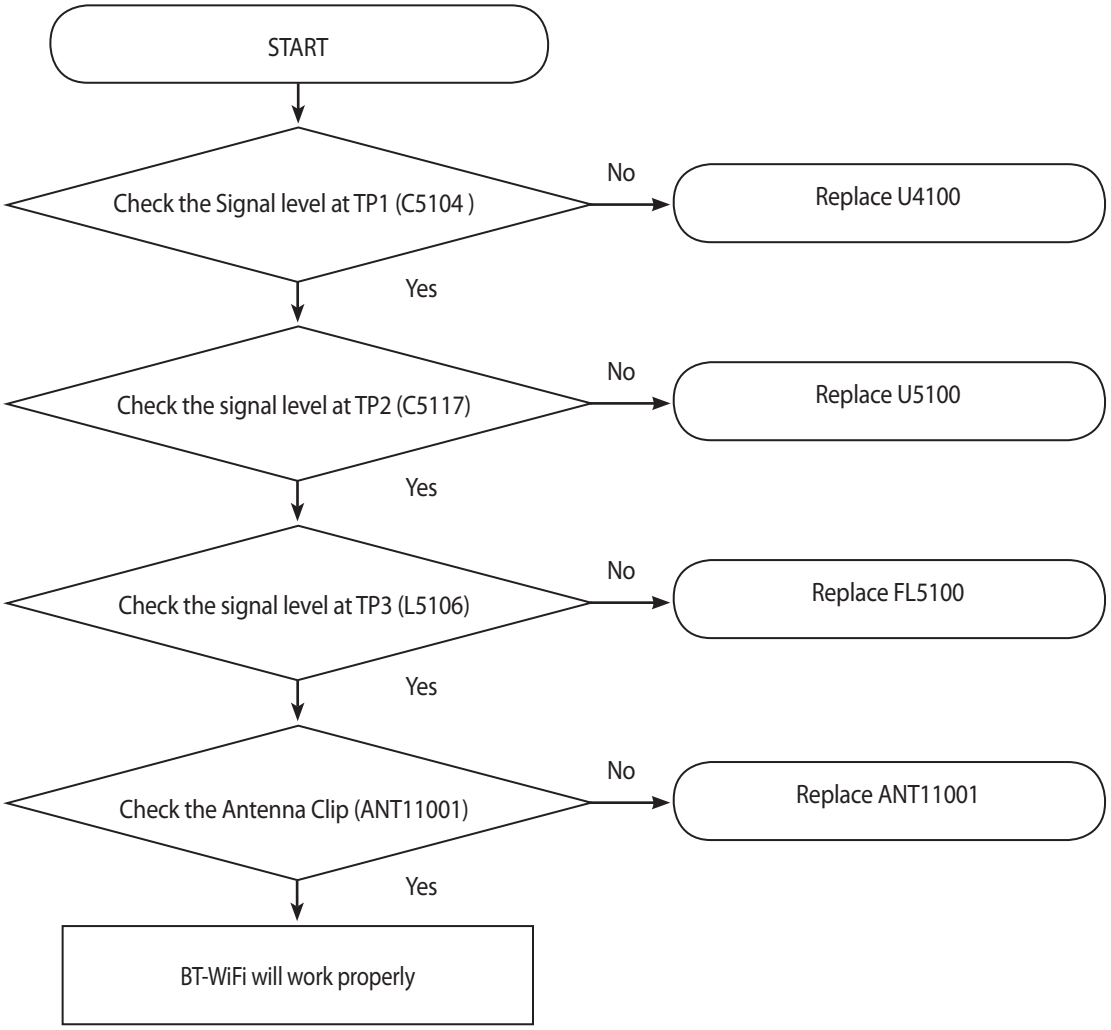

3.16 GPS TS

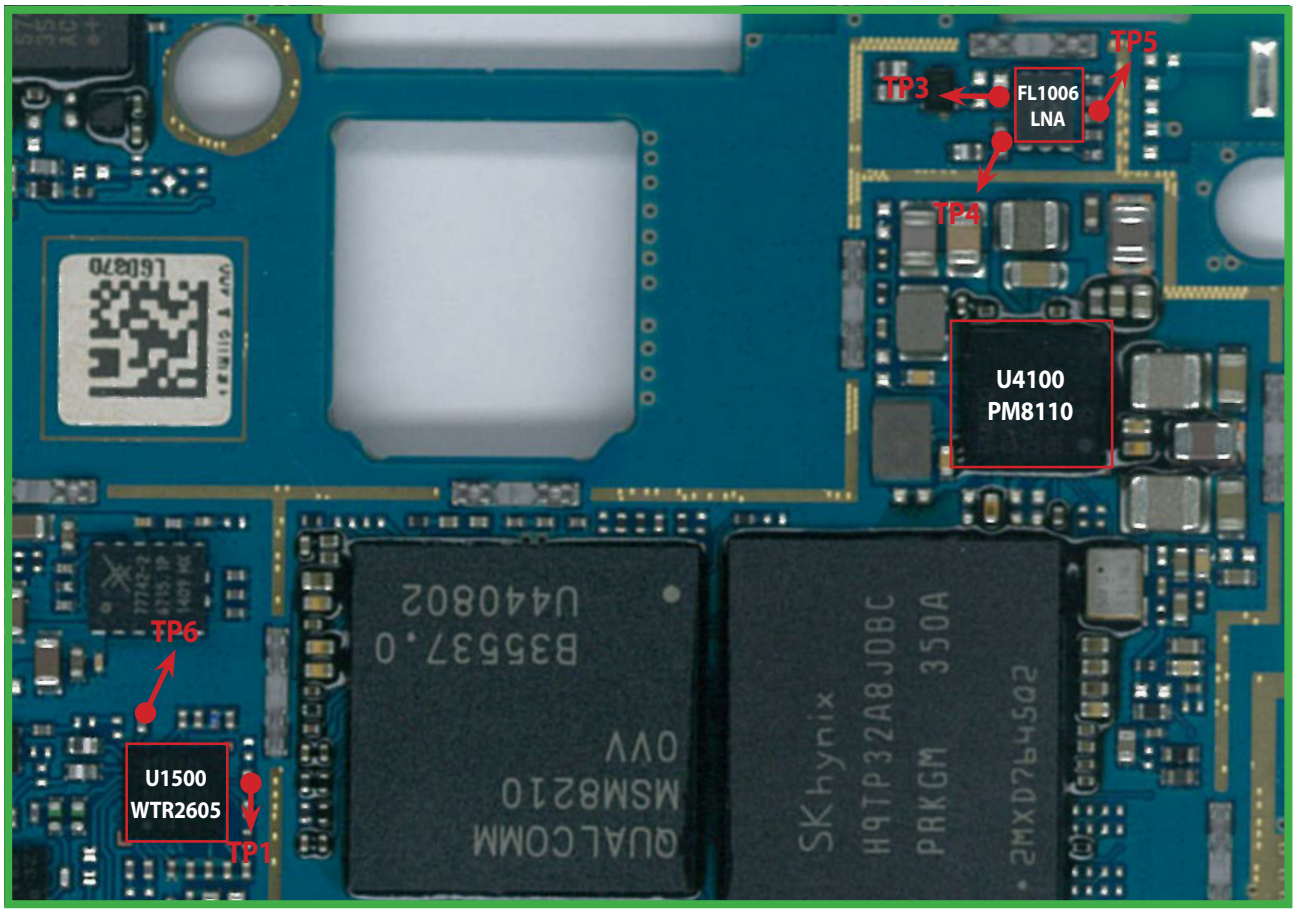

<Main Top>

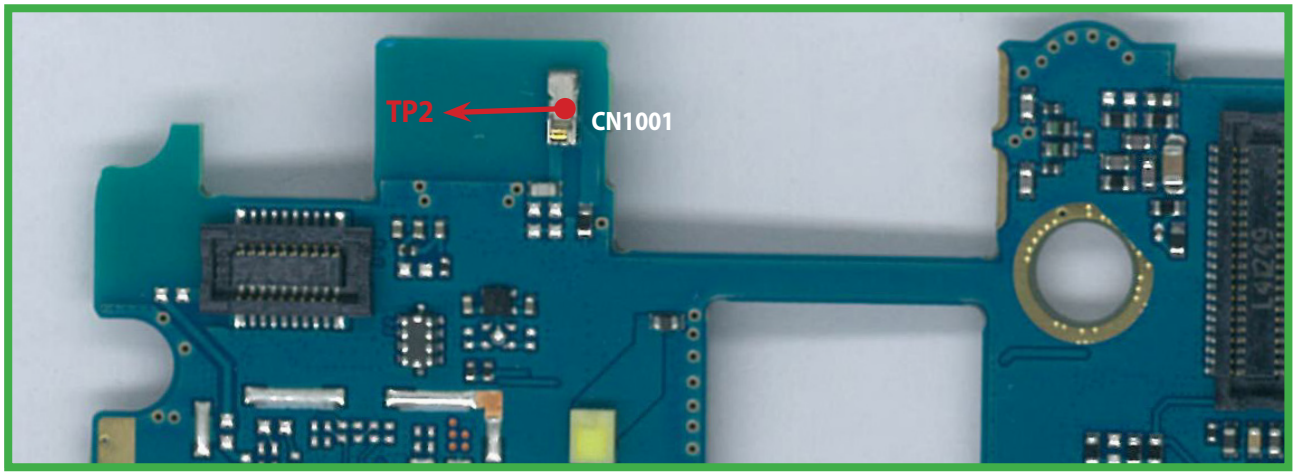

<Main Bot>

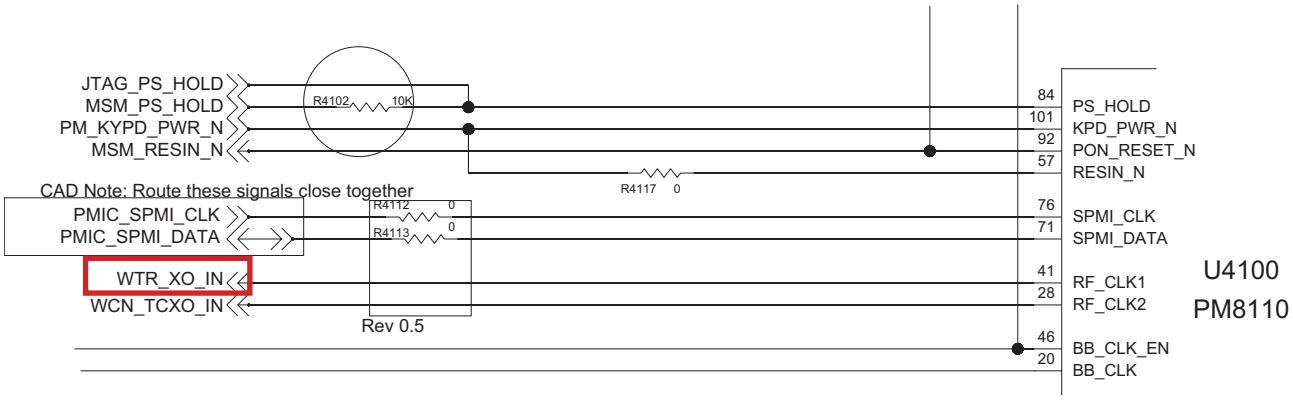

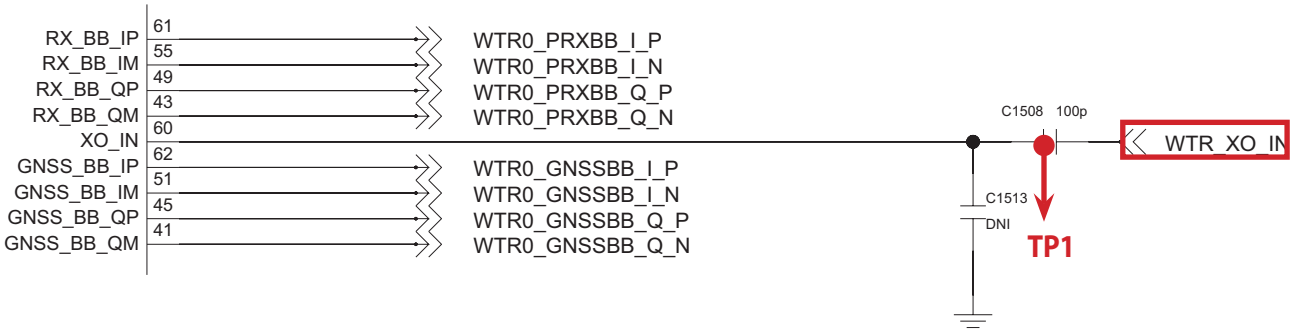

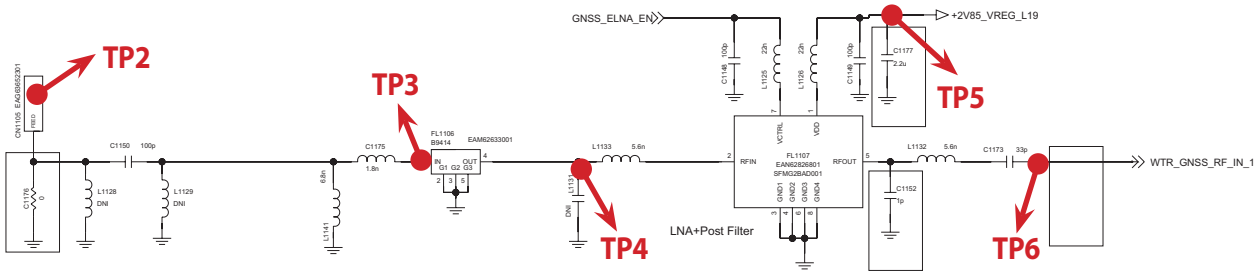

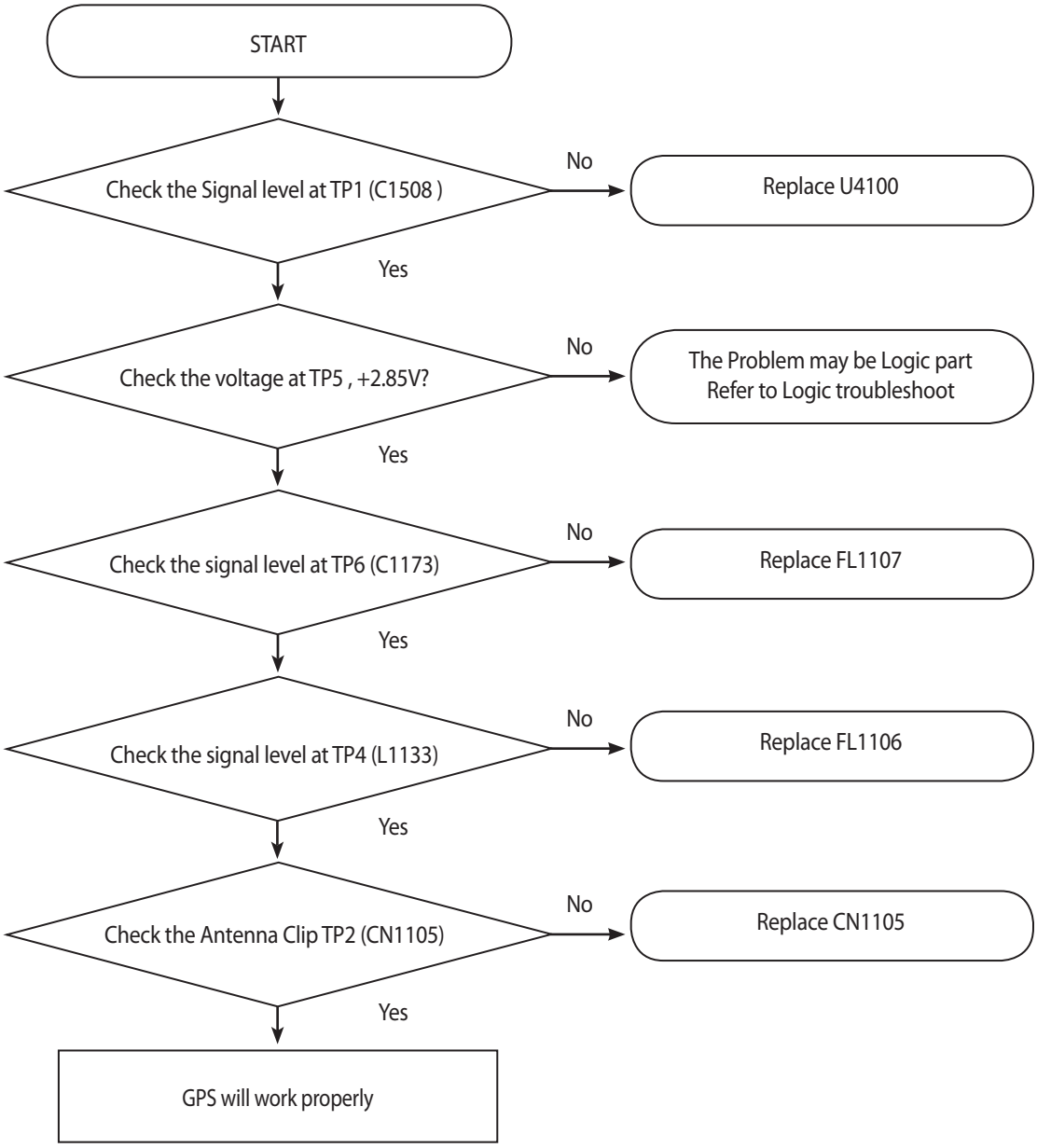

3.17 FM TS

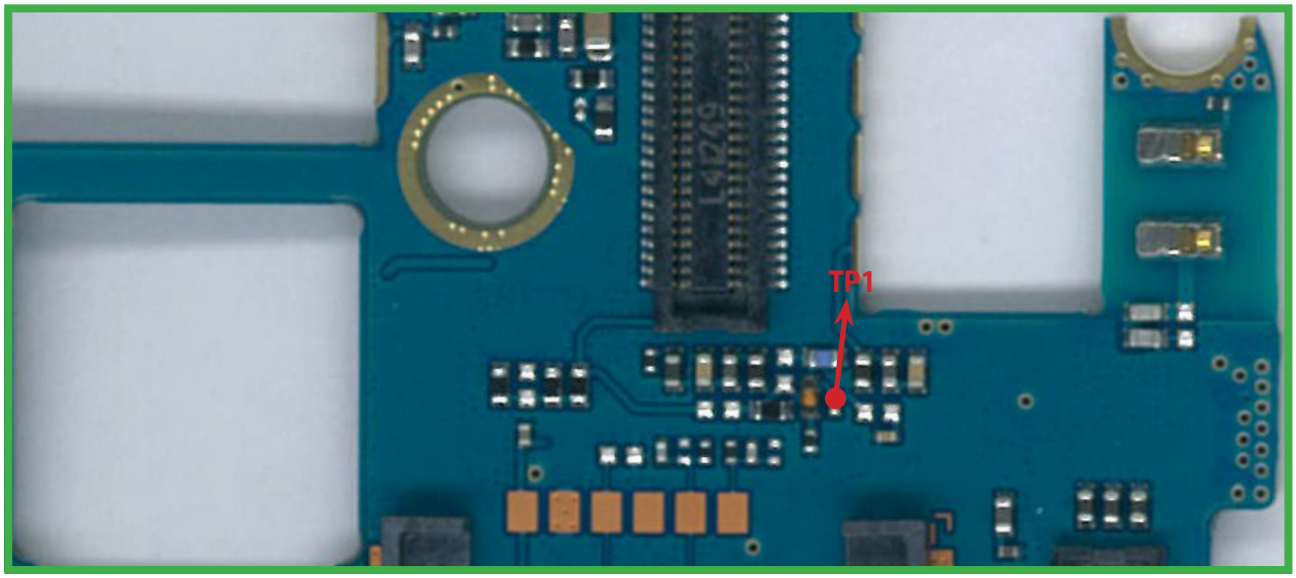

<Main Bot>

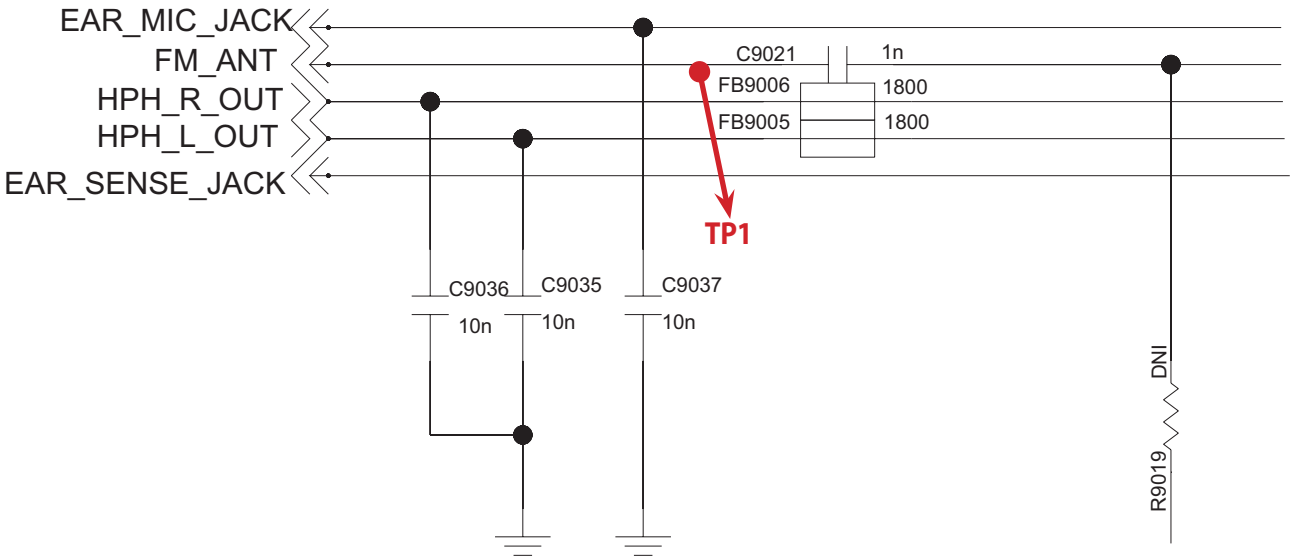

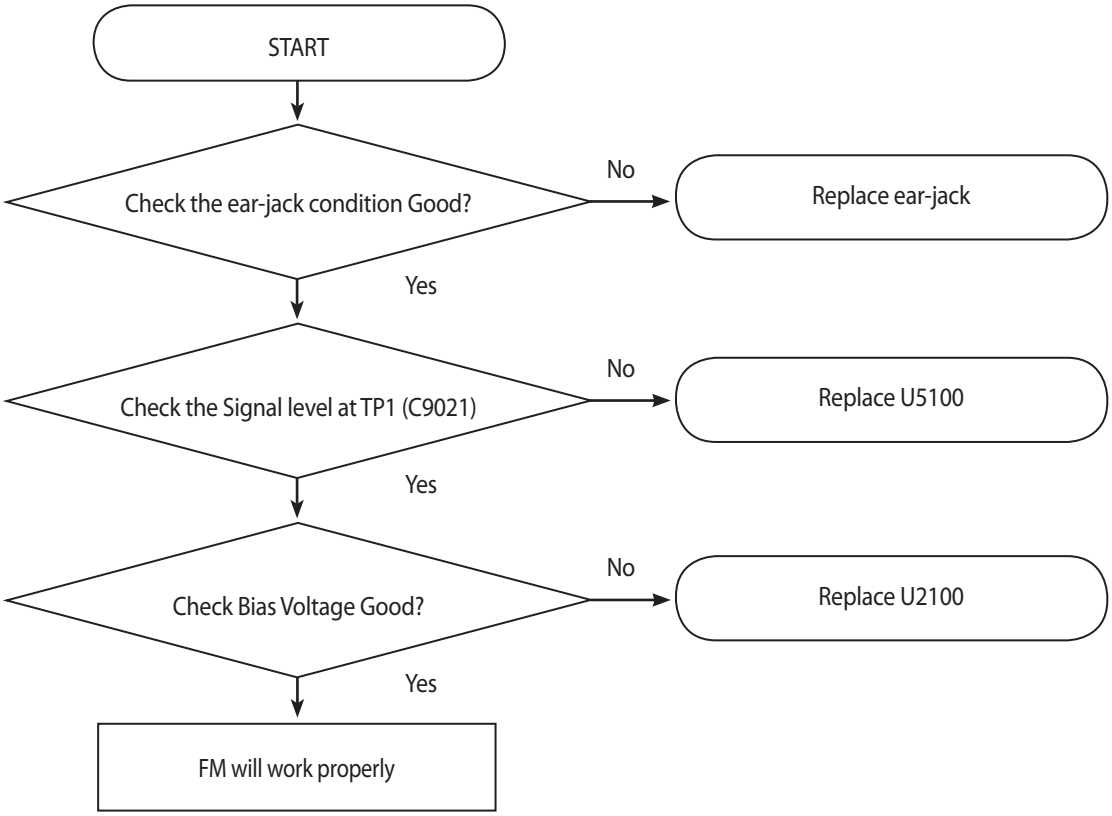

4. DOWNLOAD

This document is draft version, so the contents will be updated after registering the final one.			
TOOL INFORMATION			
TOOL VERSION	**DLL NAME**	**USB DRIVER**	
Please Check the Version to "B2B"			
H/W			
	Name	**Part No.**	**SW**
D/L Cable			

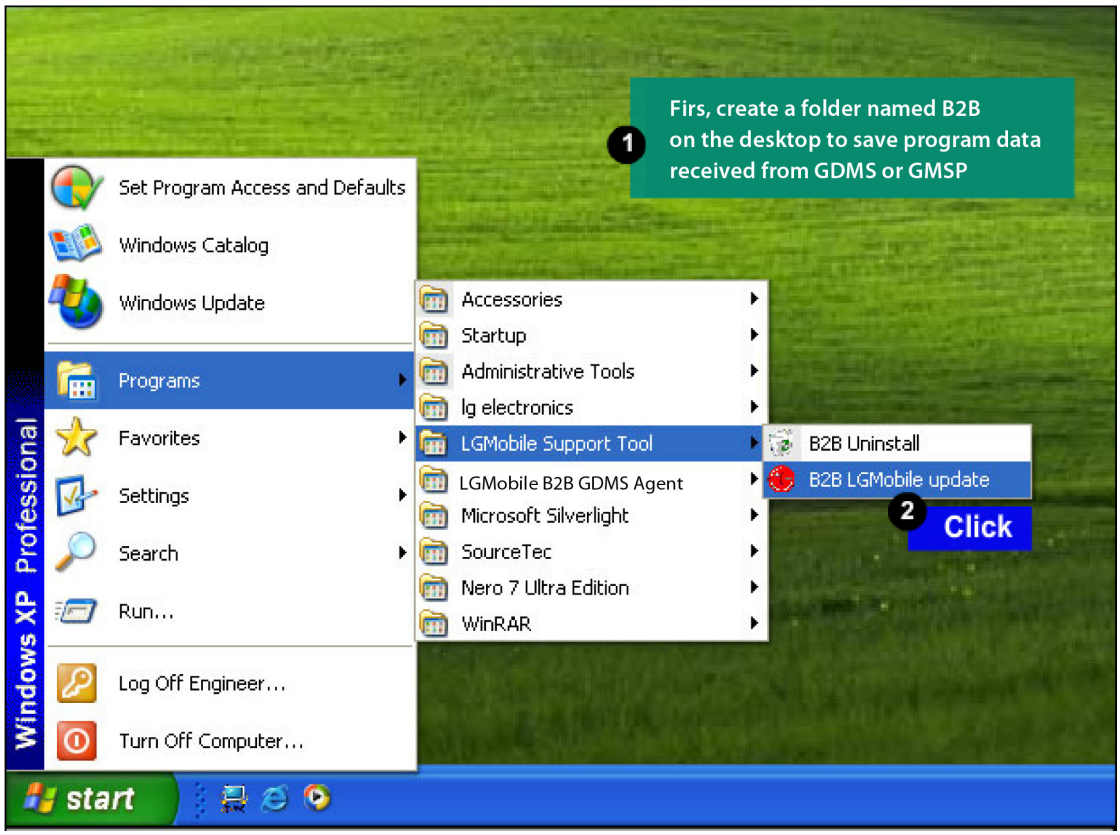

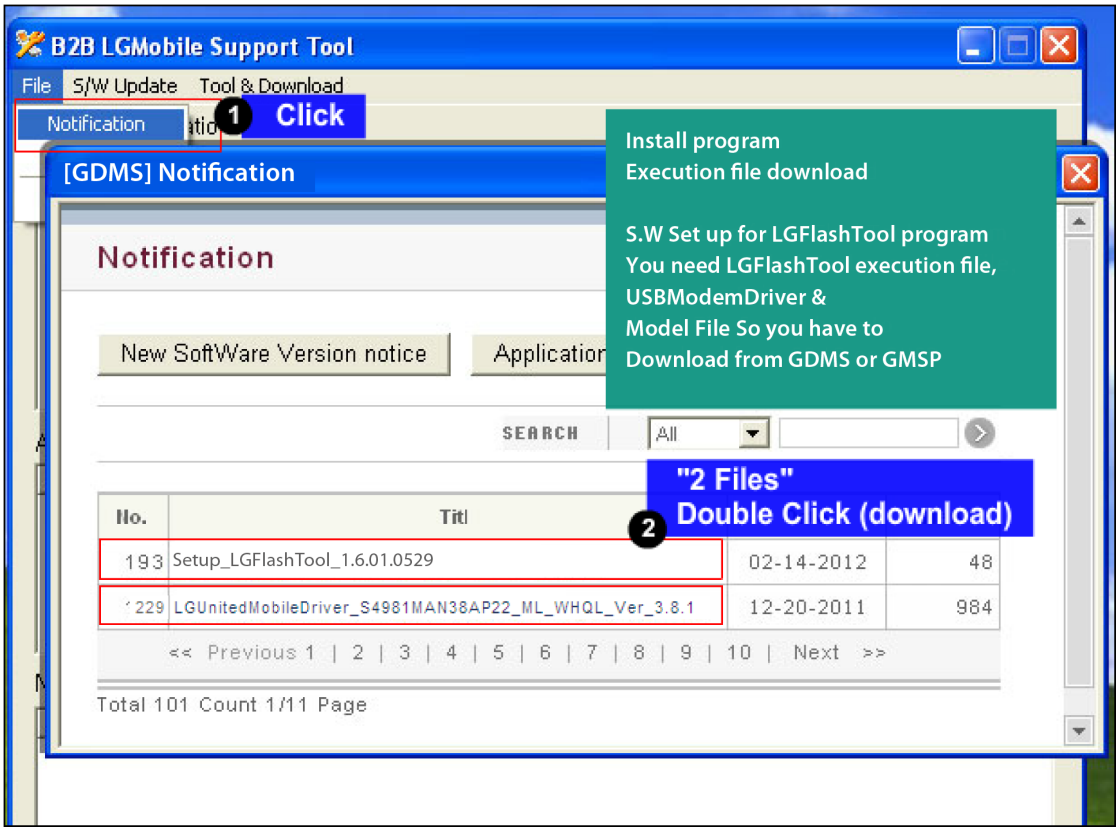

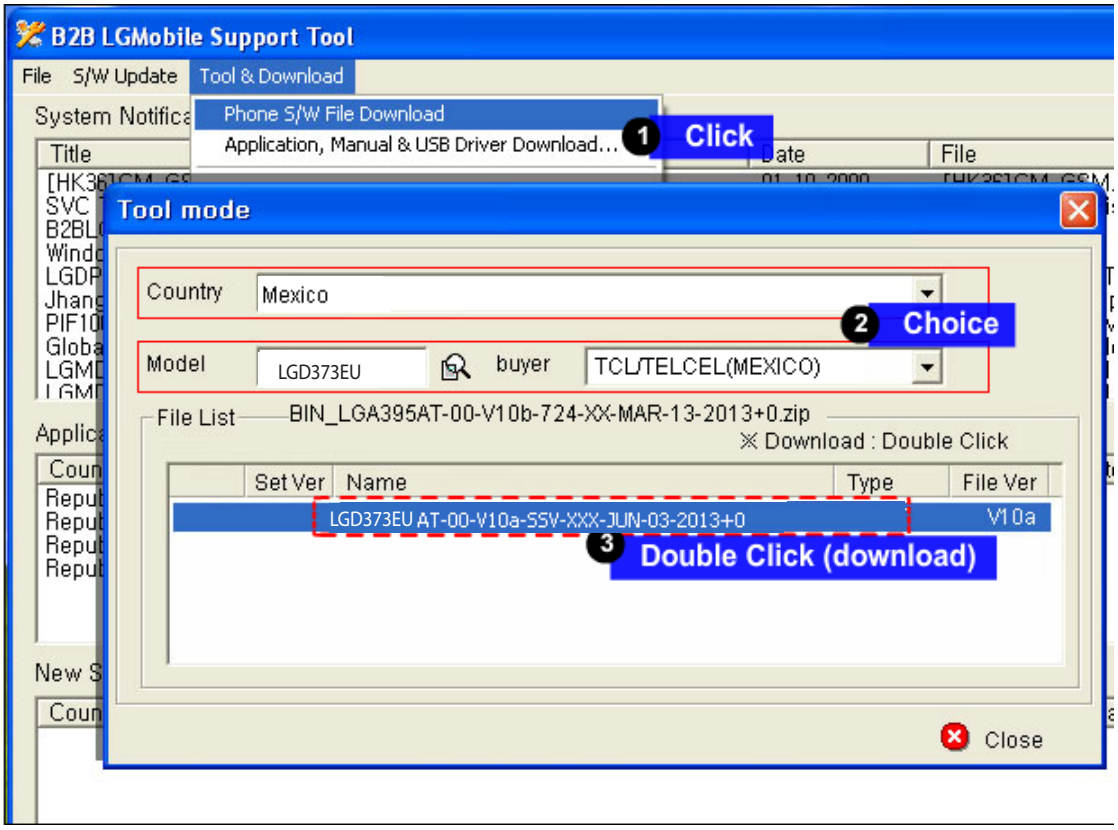

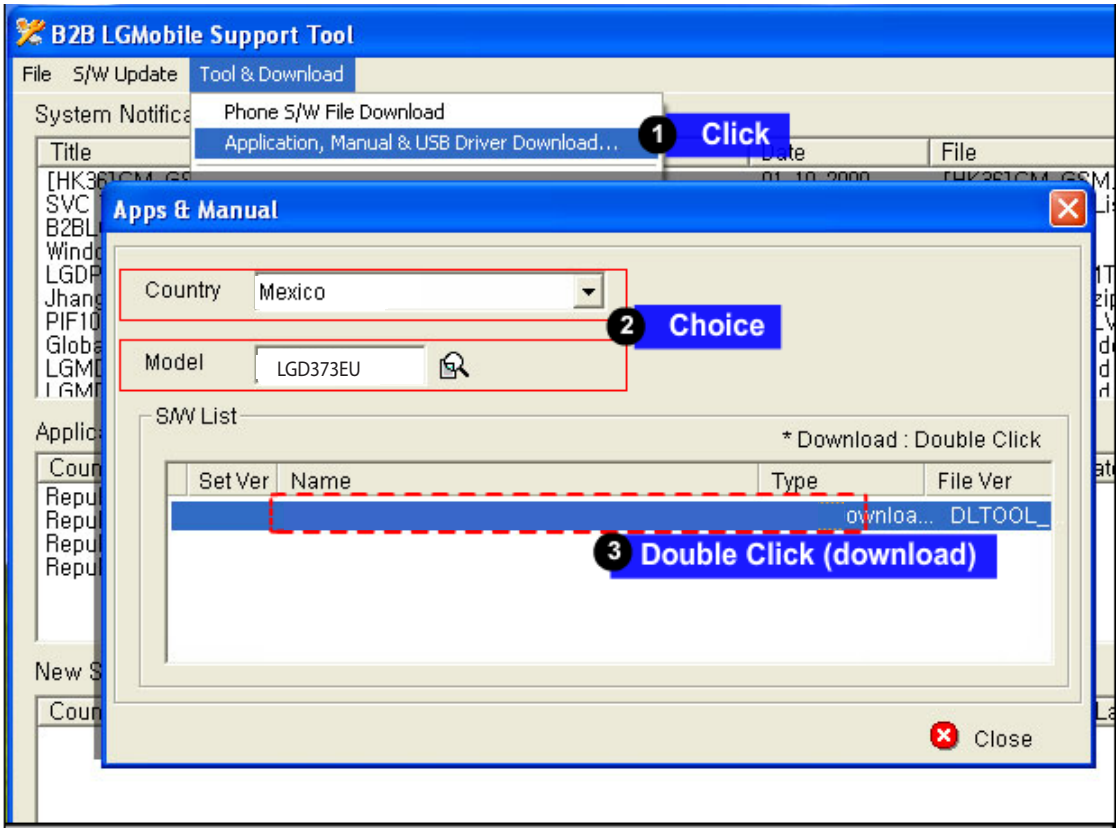

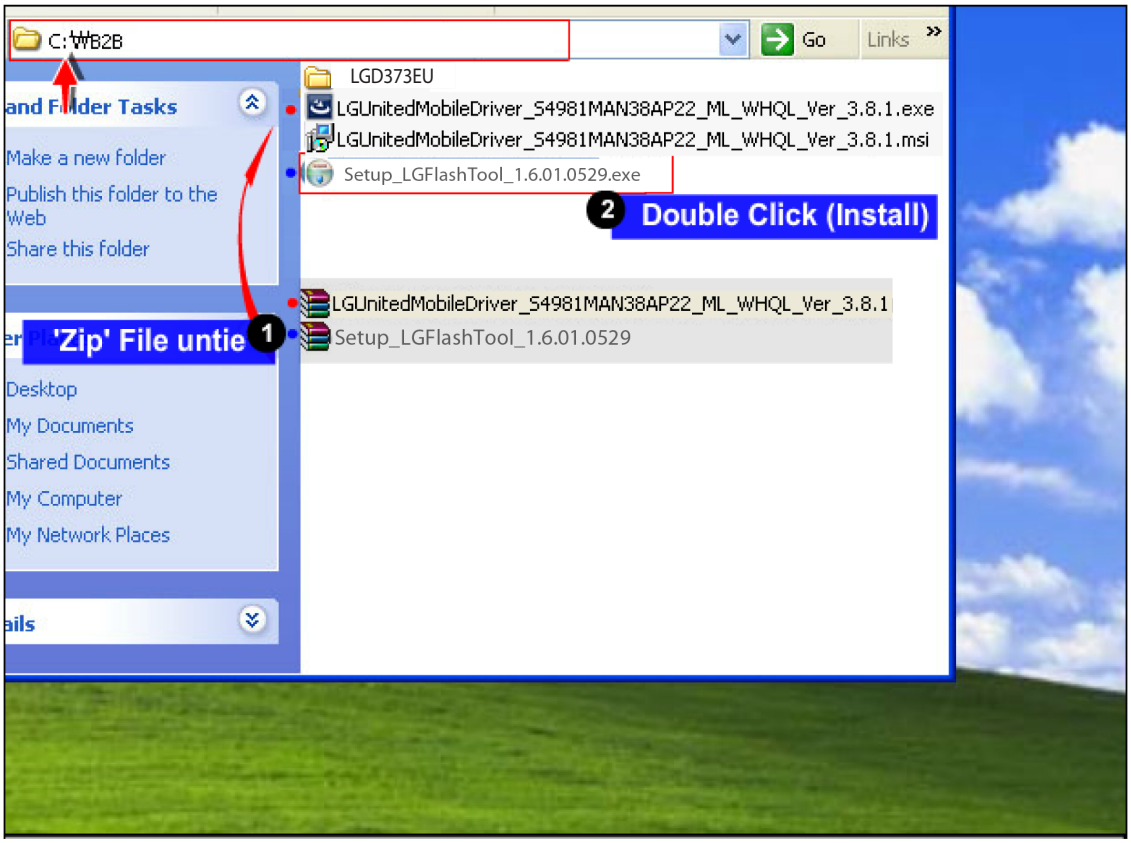

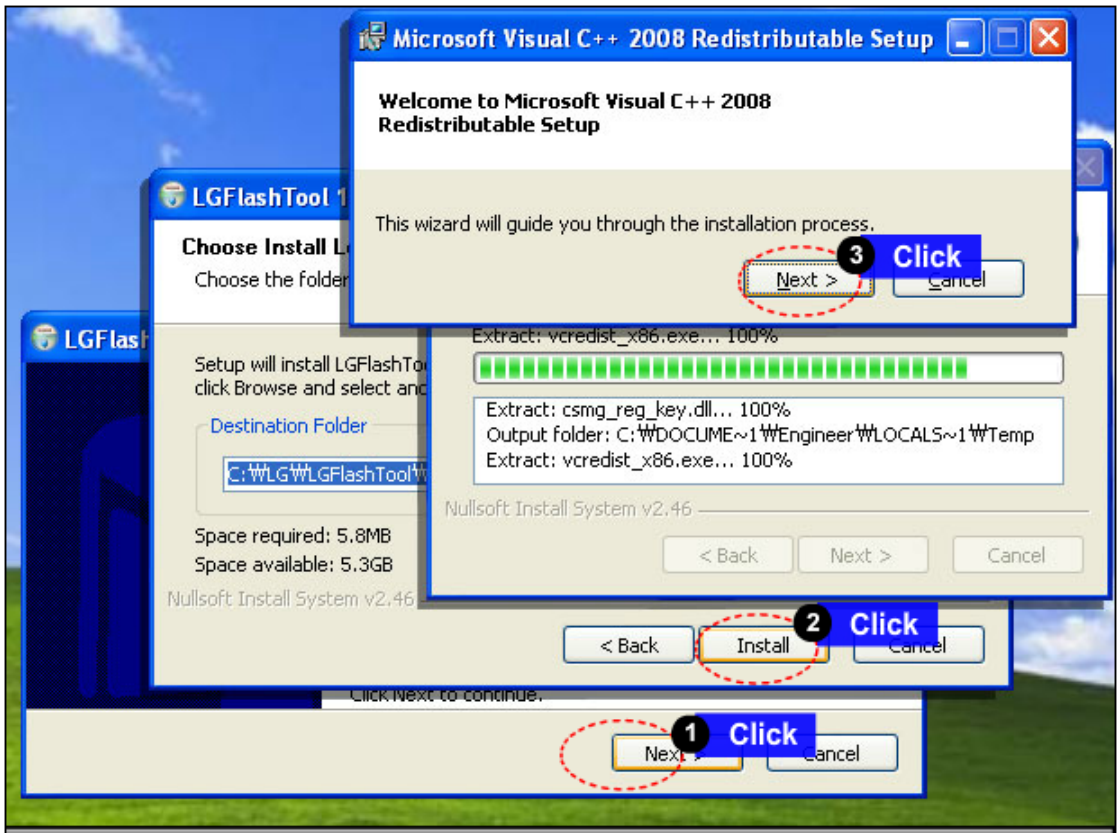

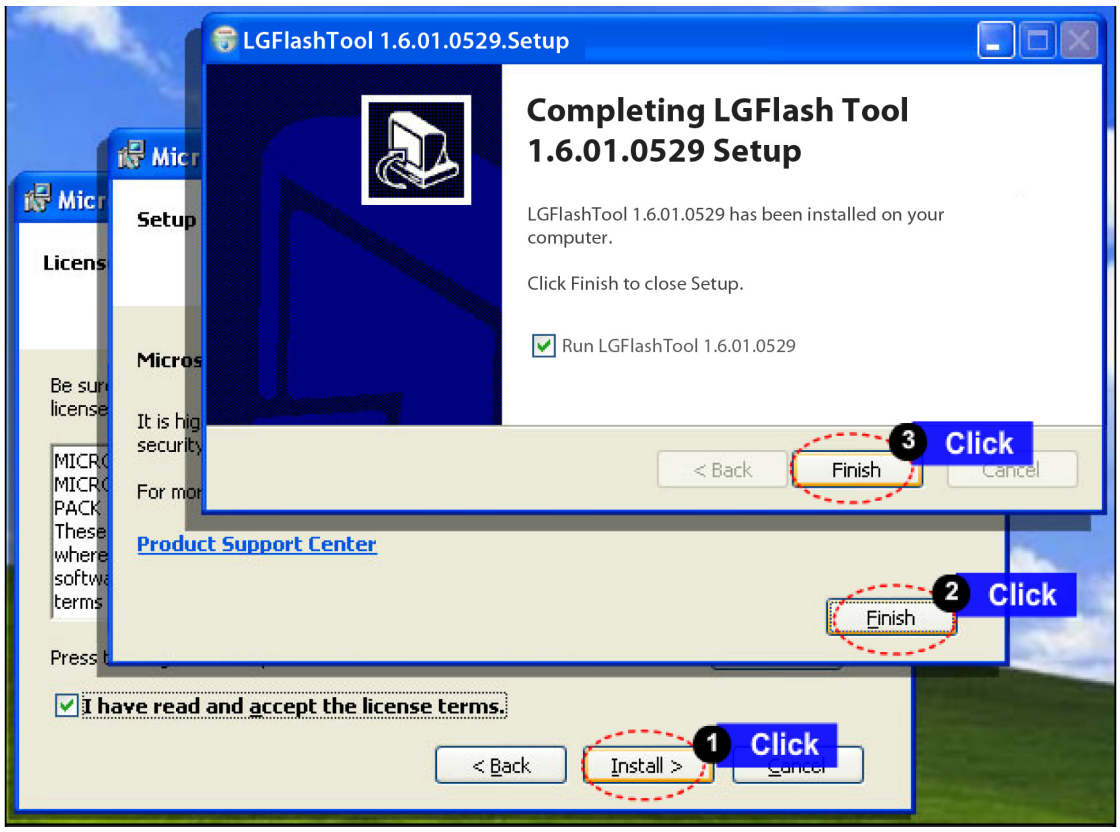

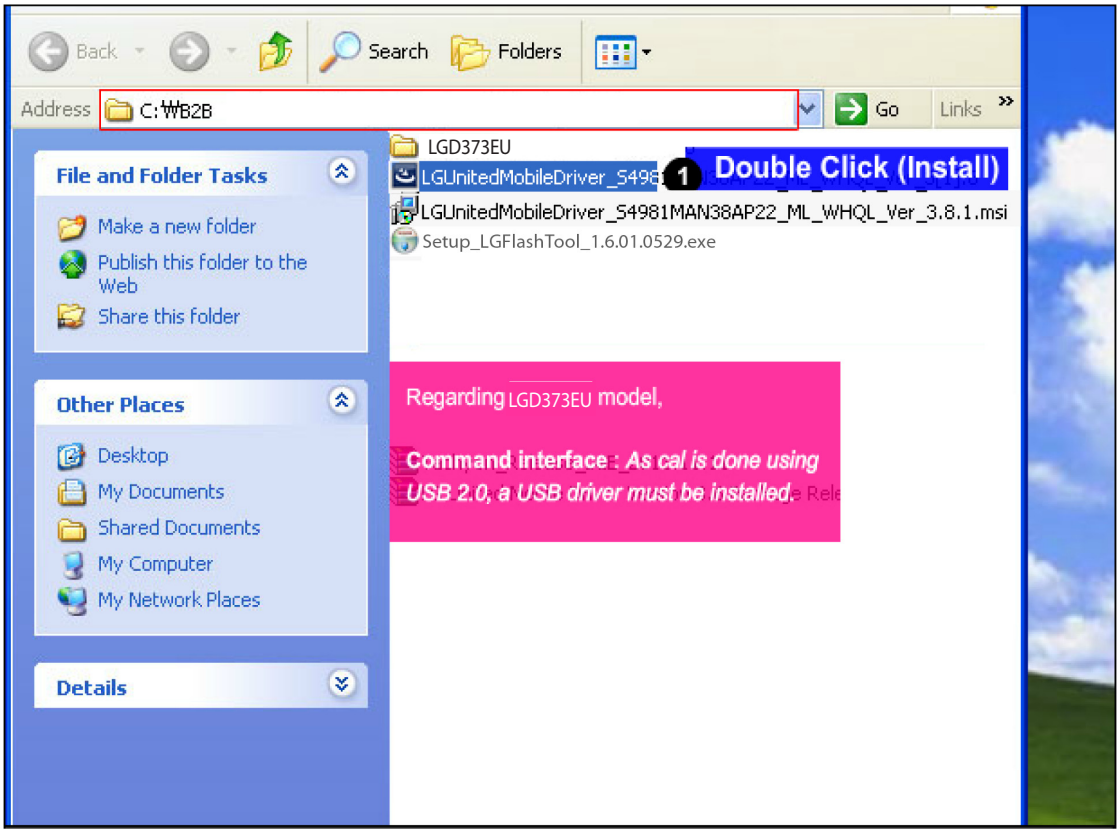

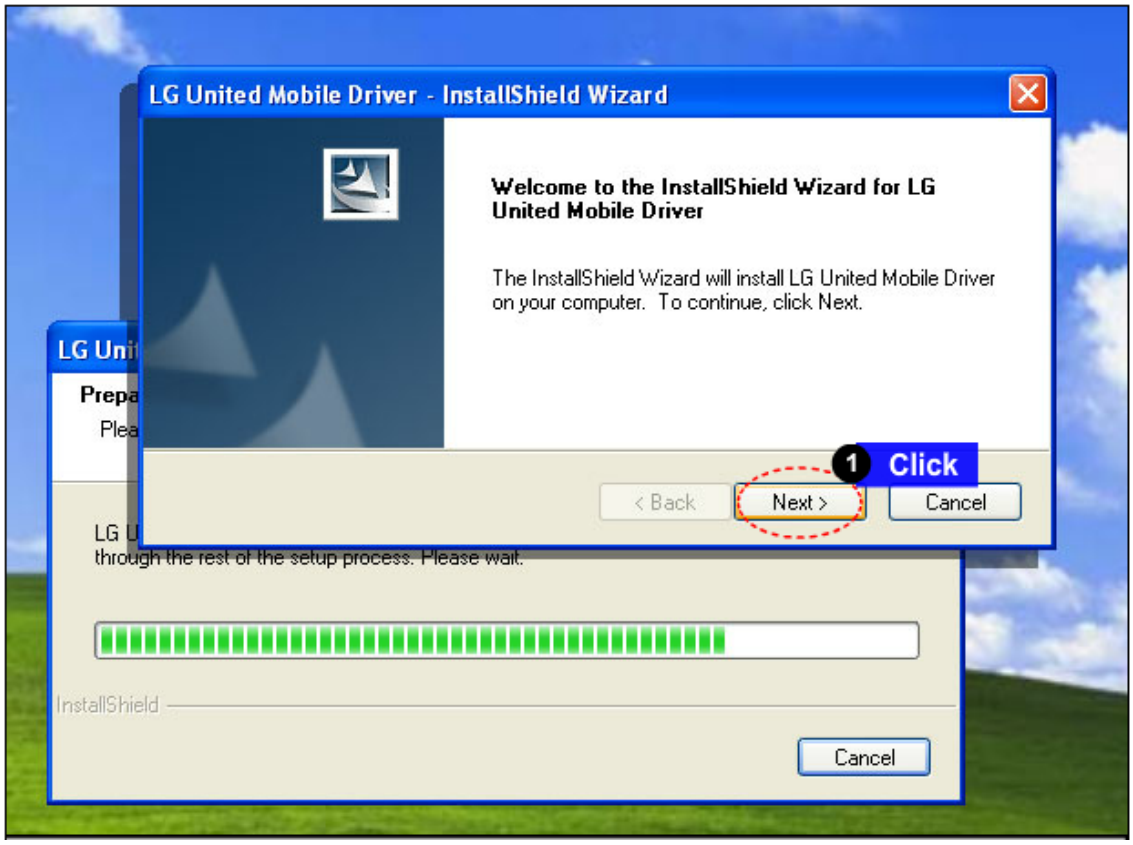

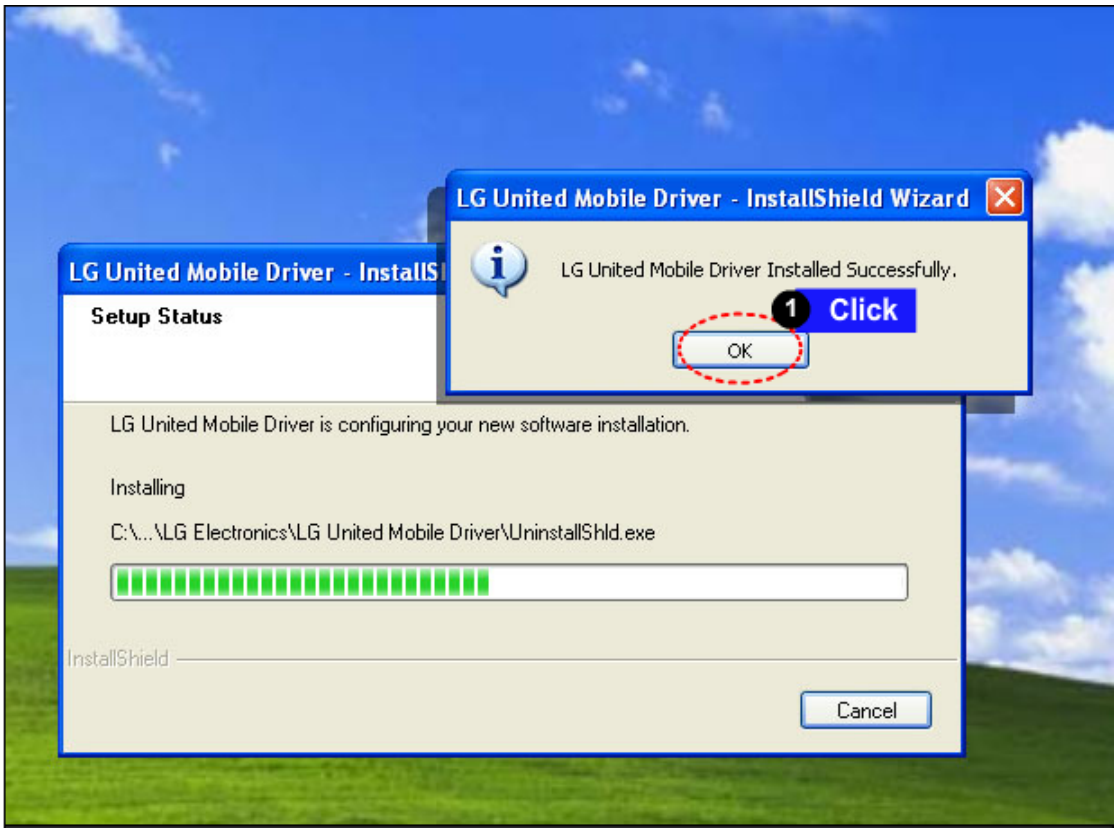

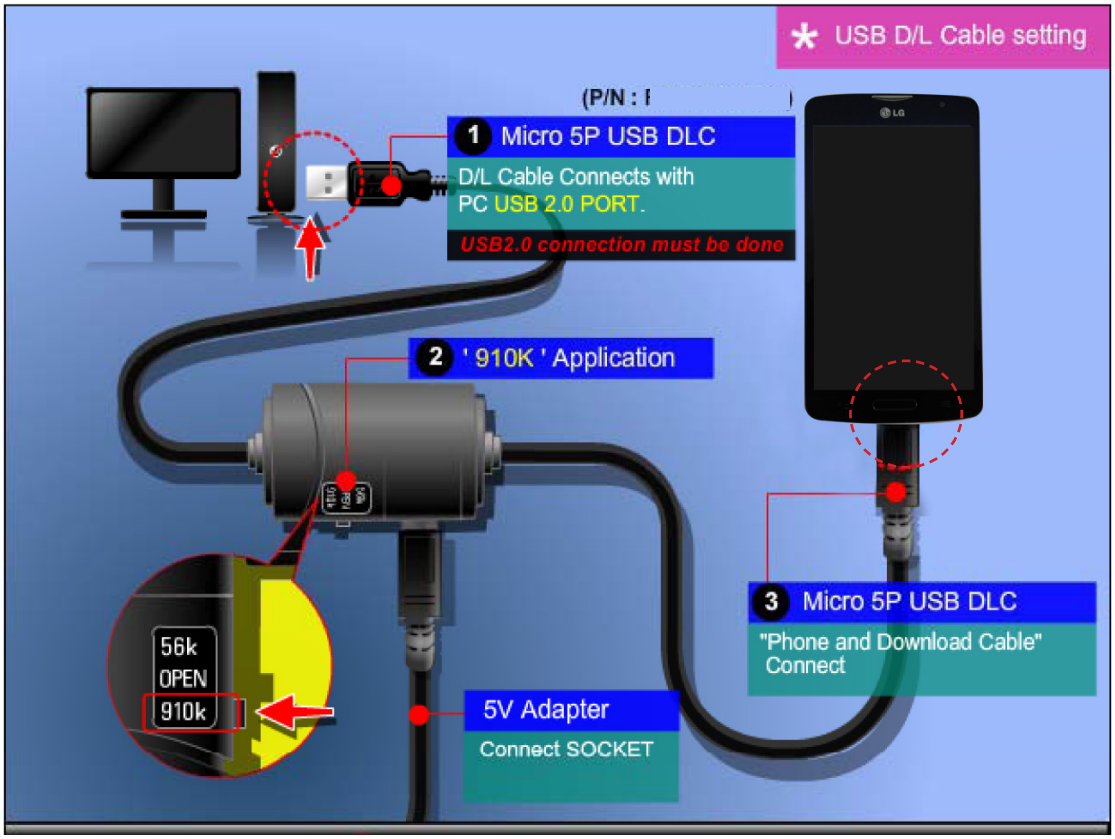

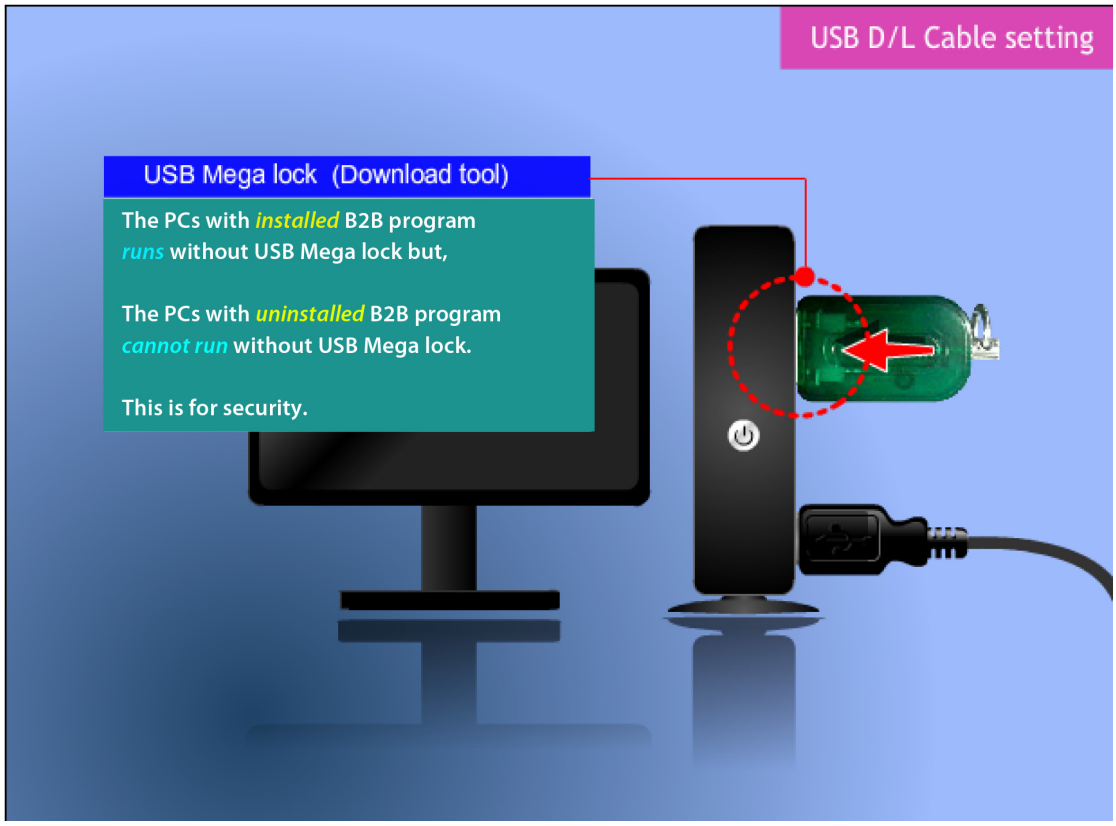

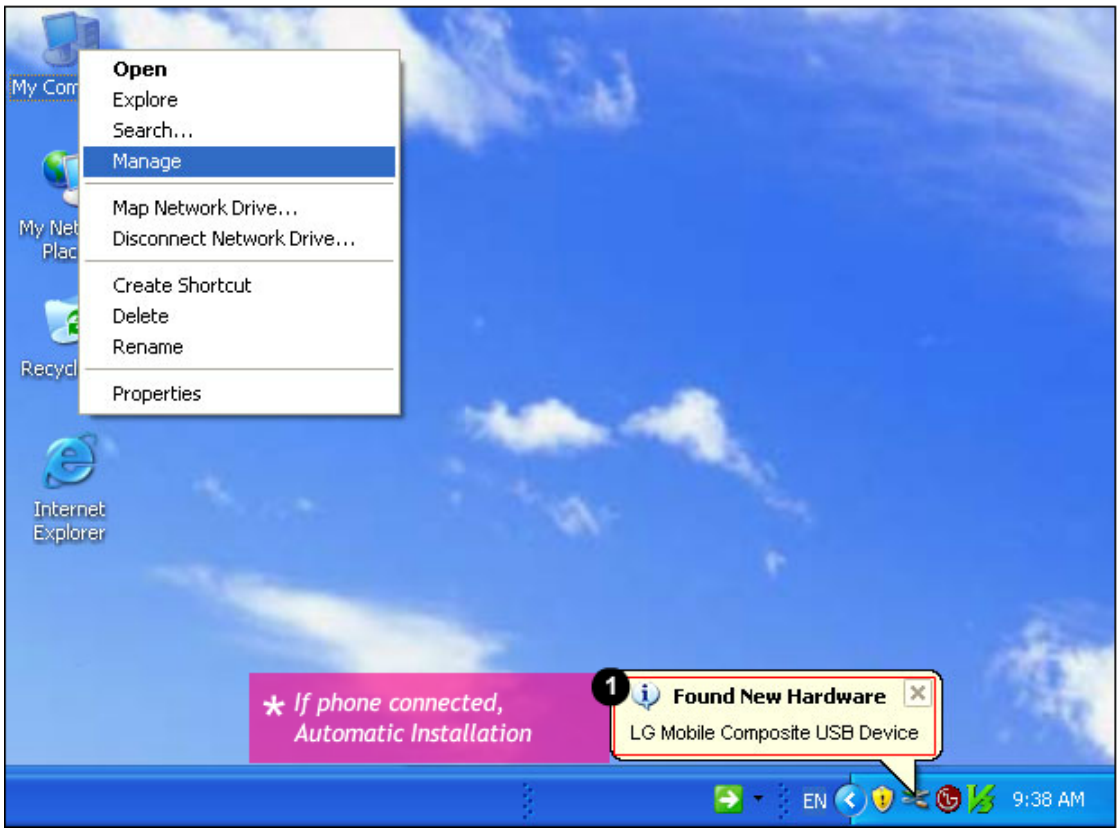

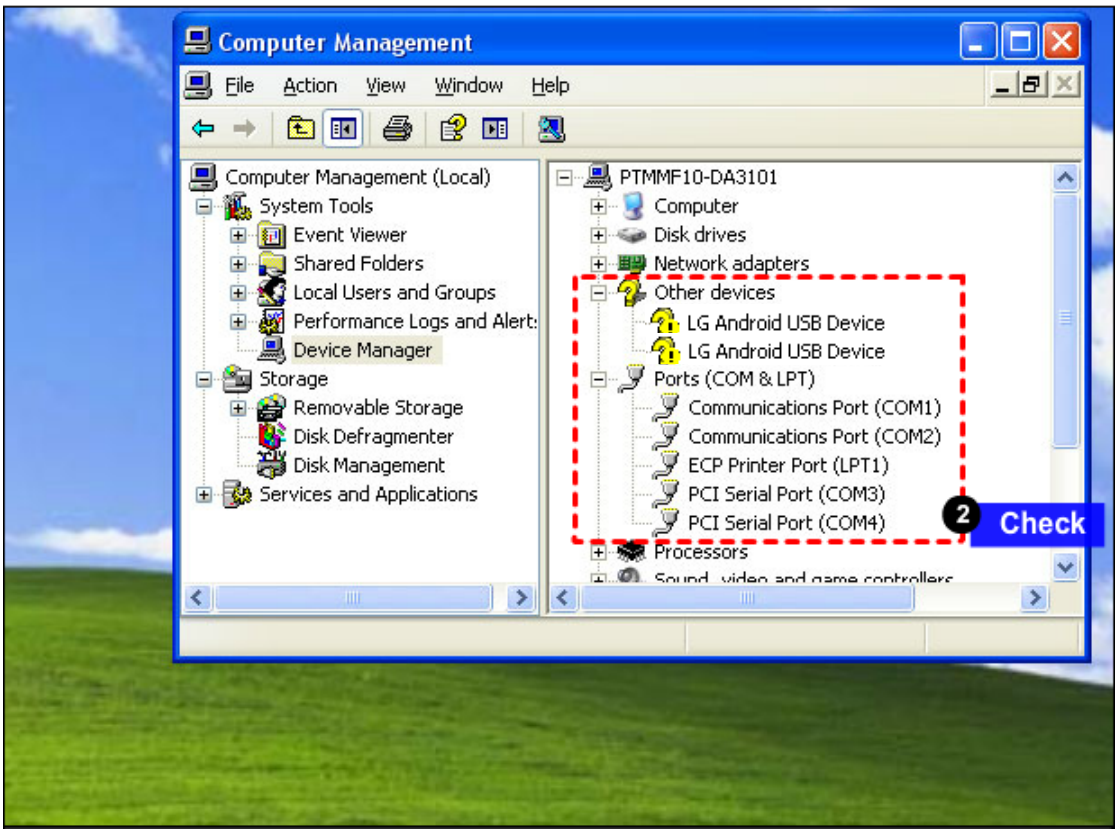

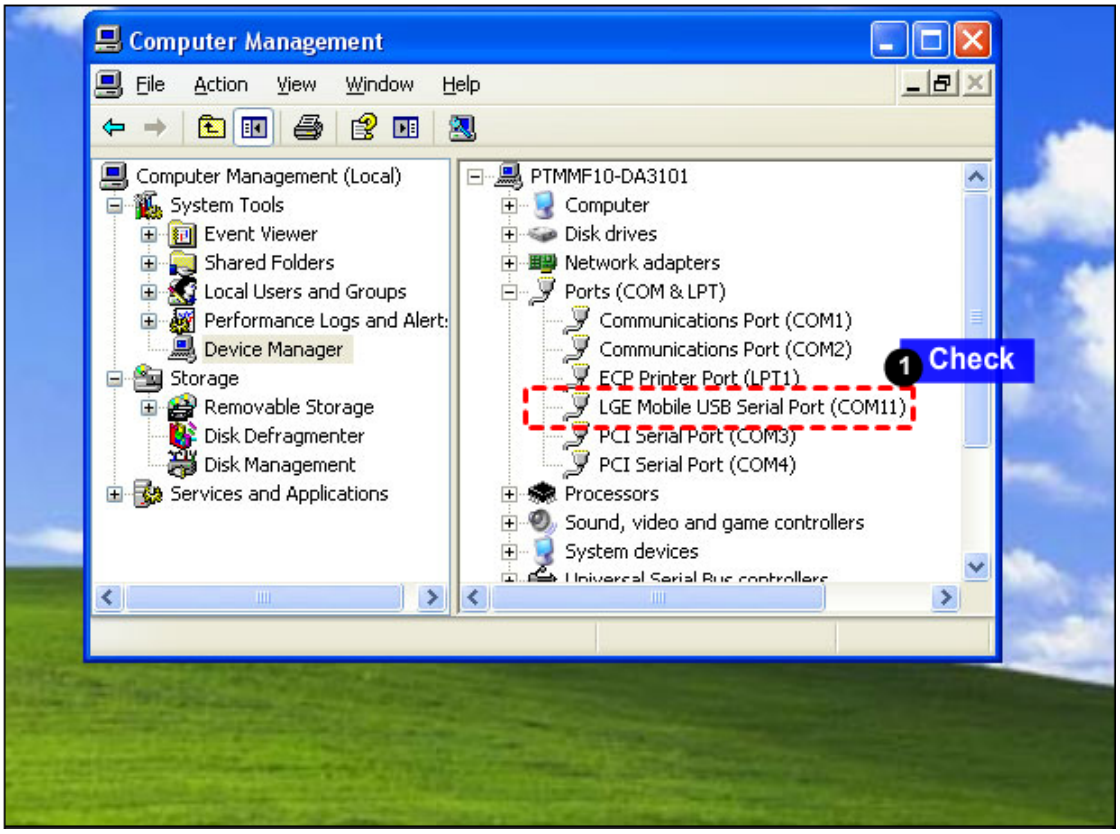

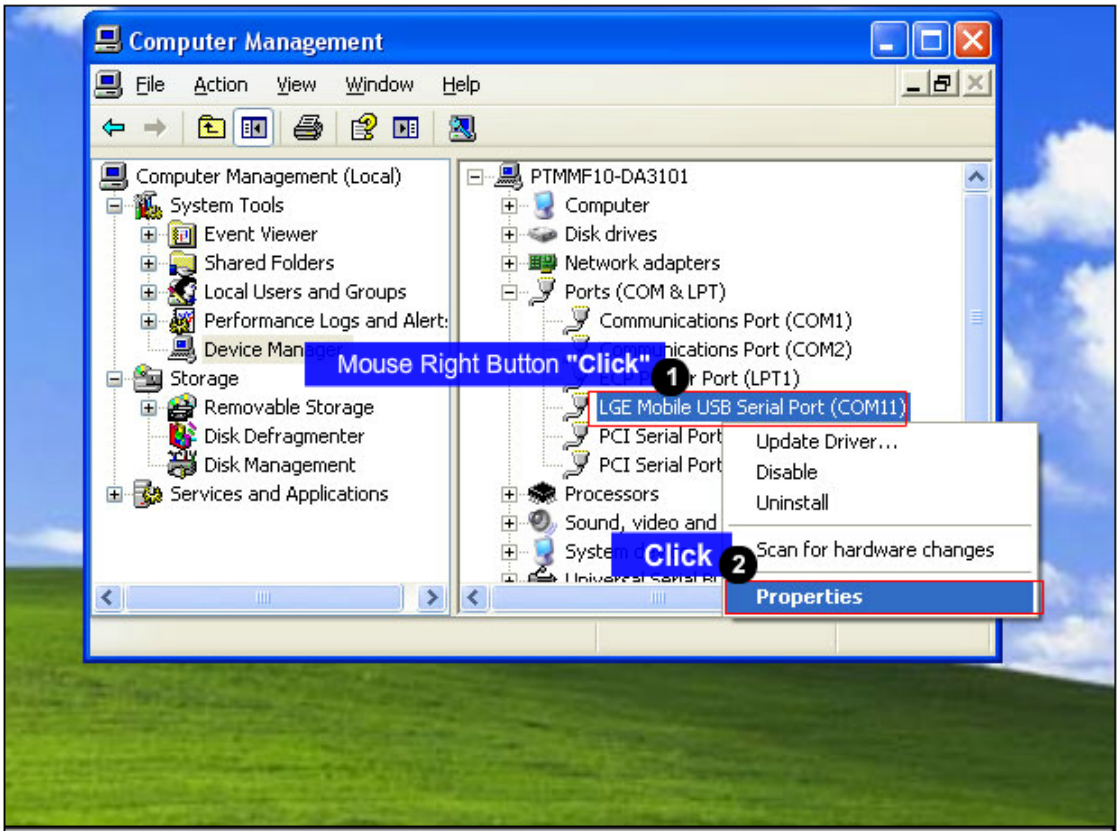

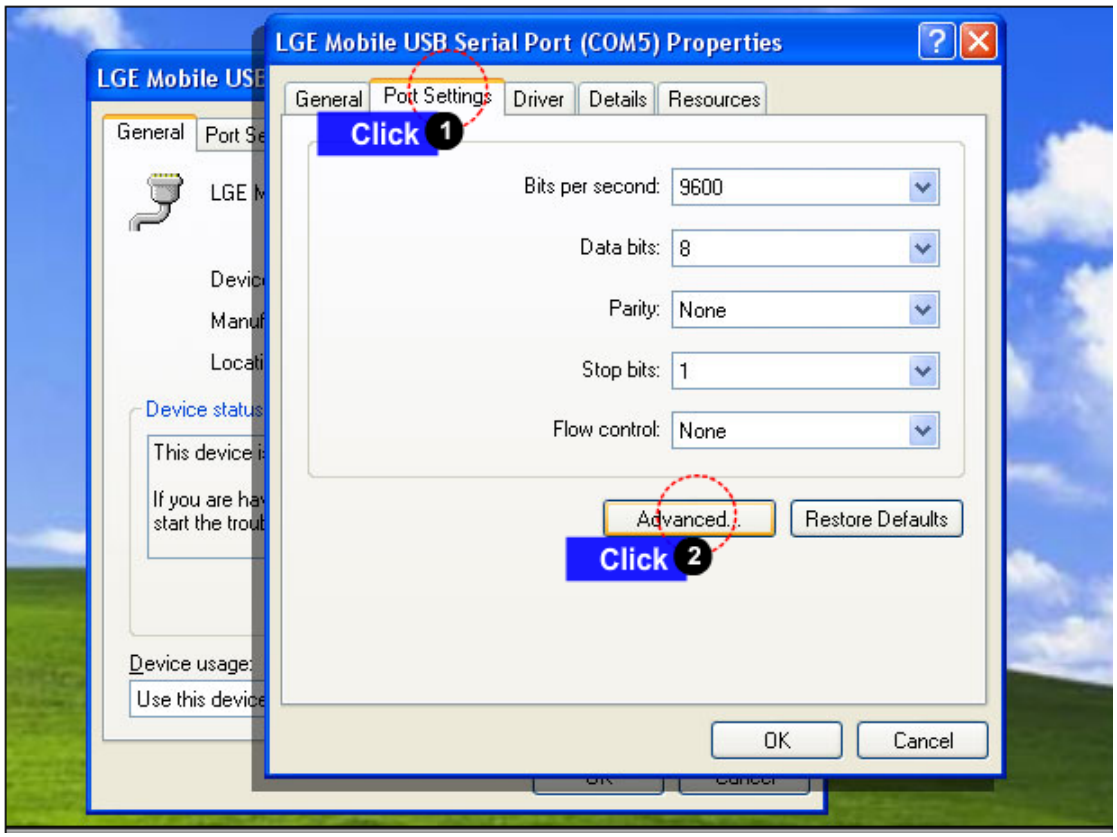

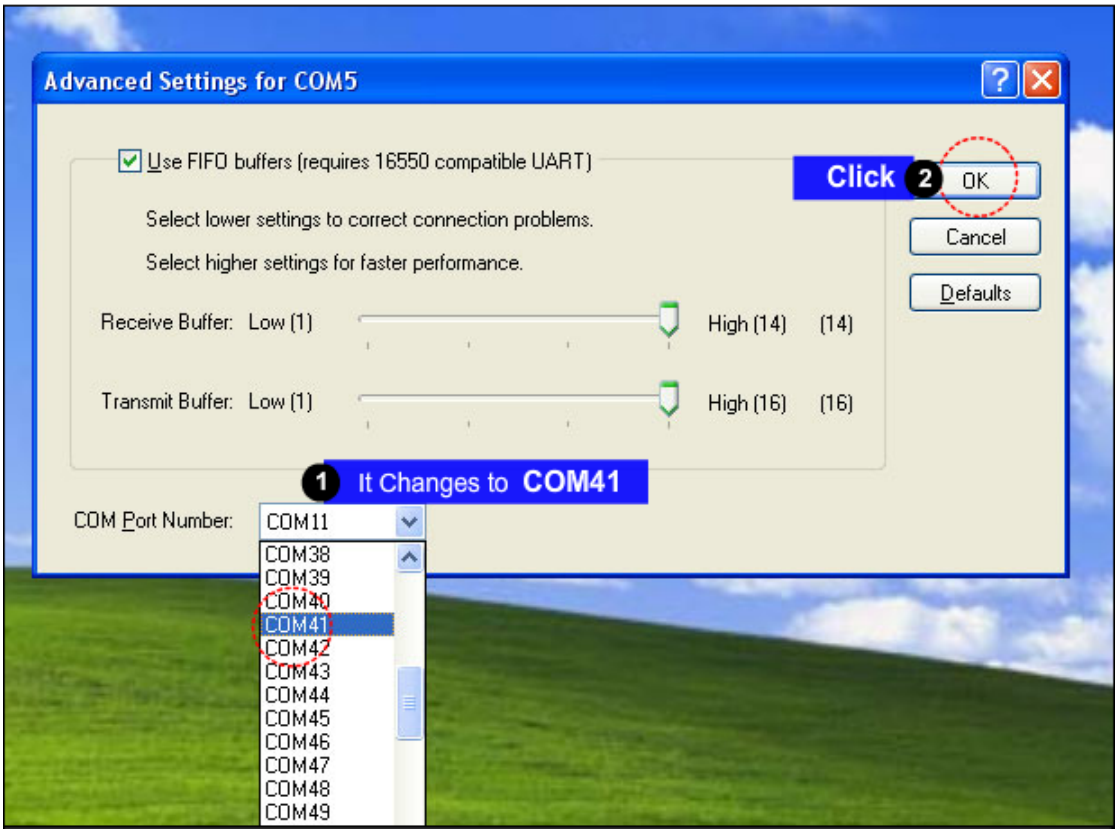

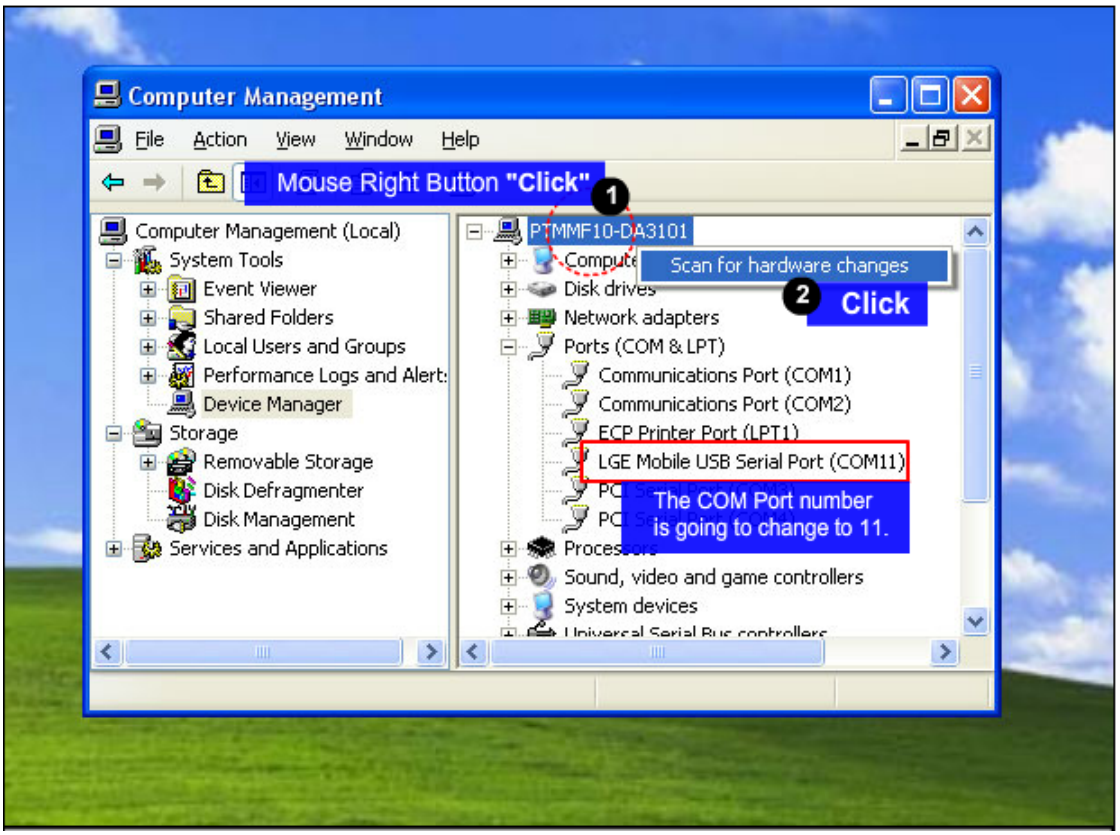

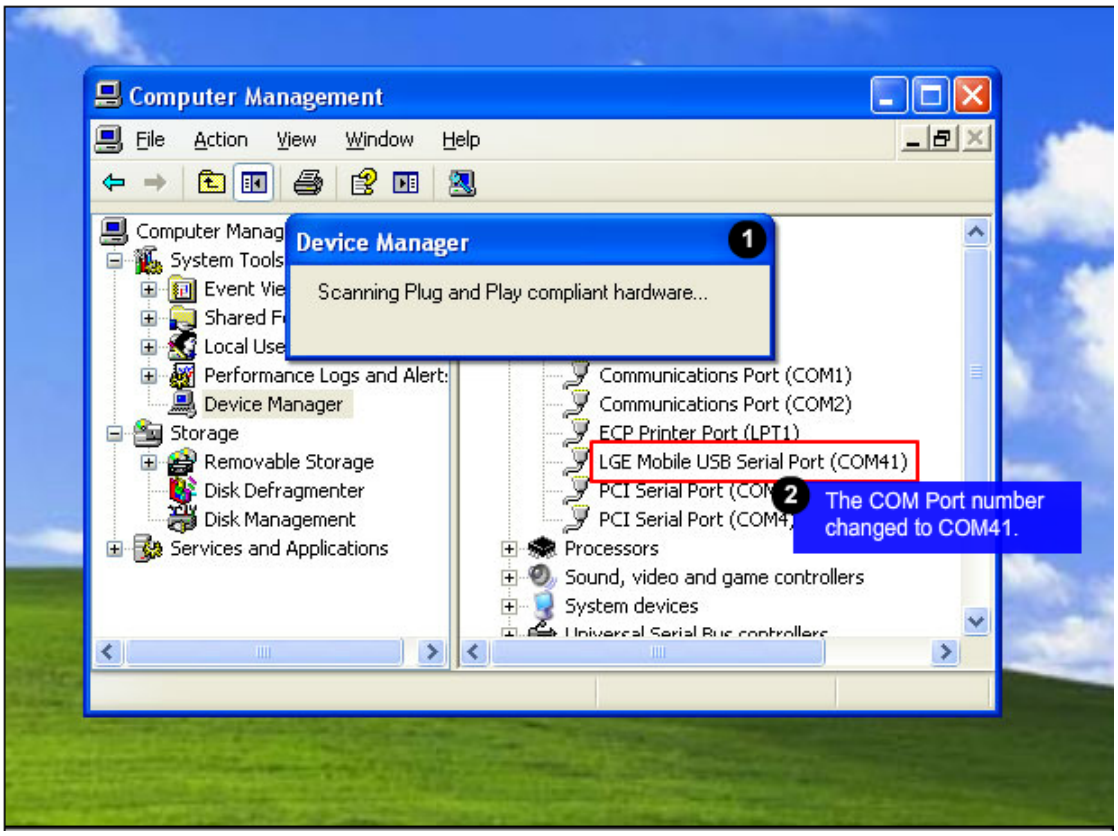

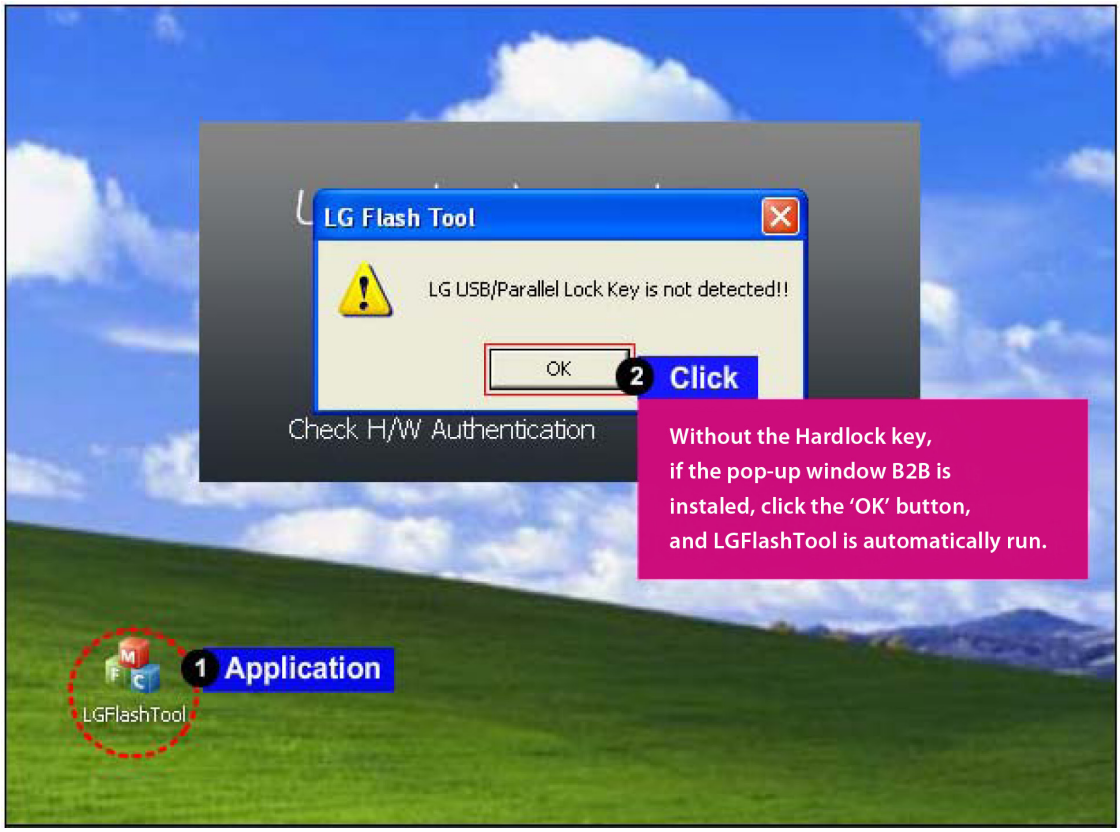

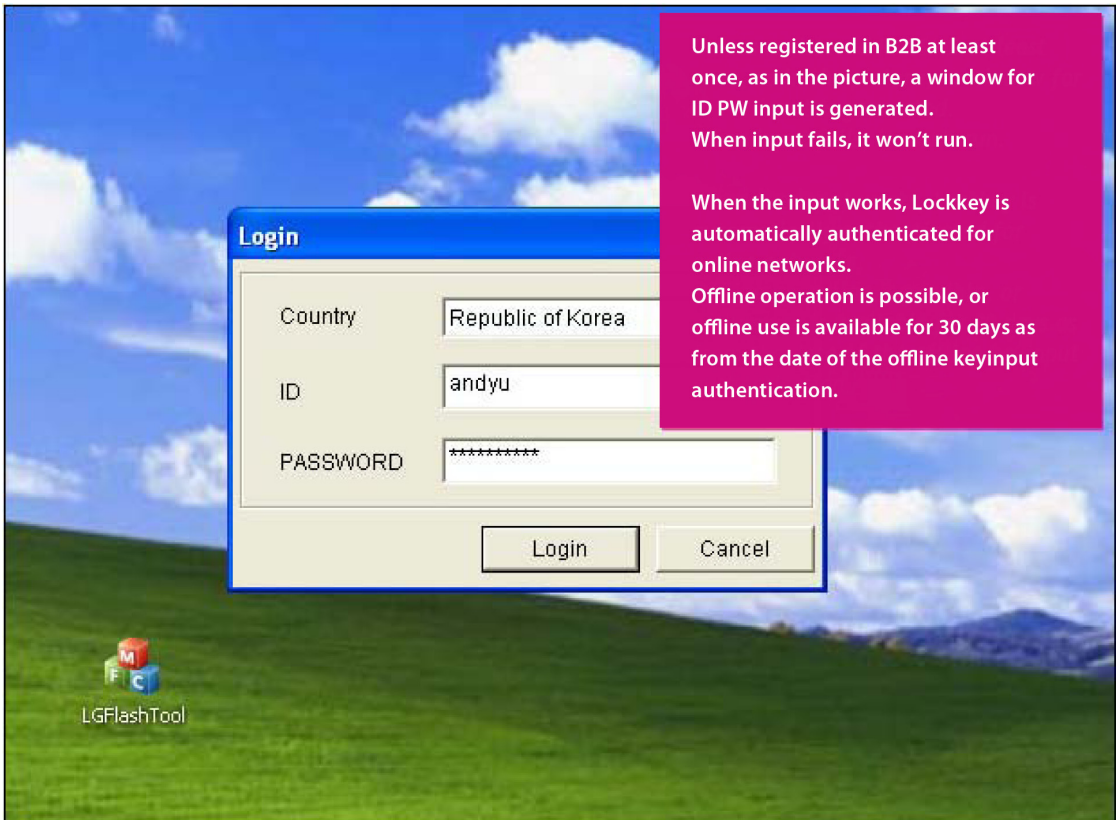

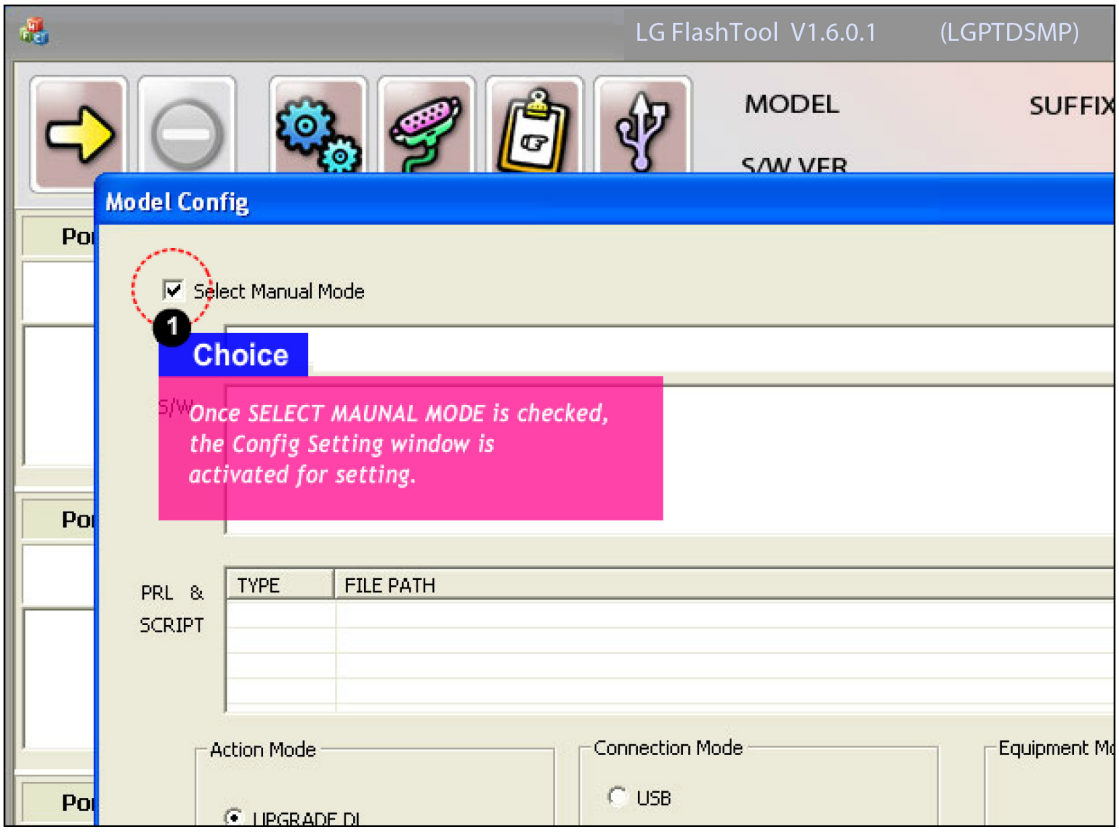

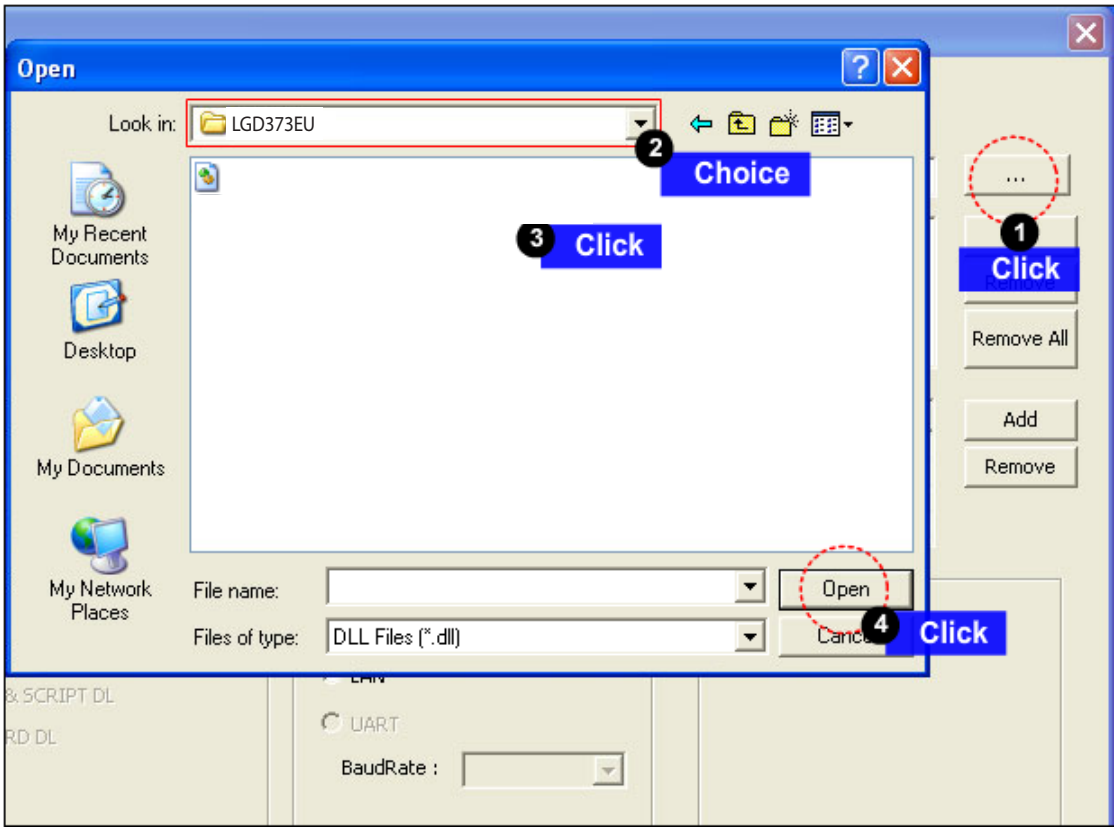

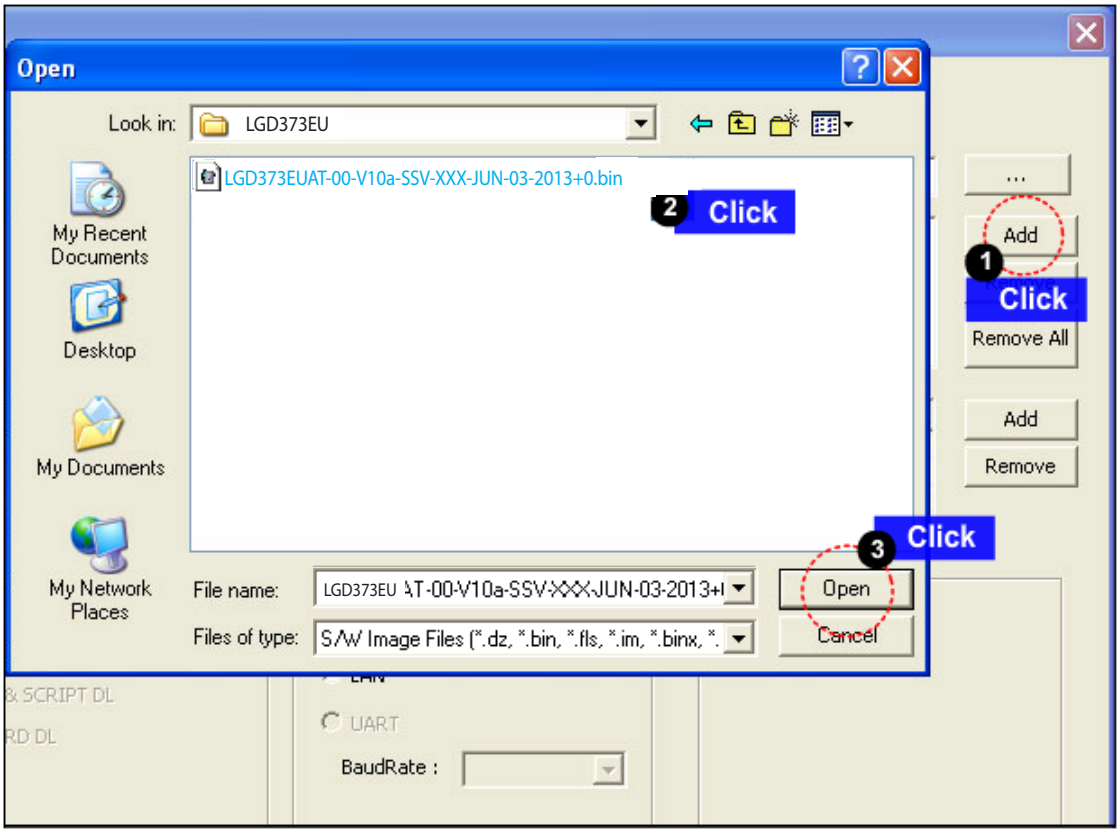

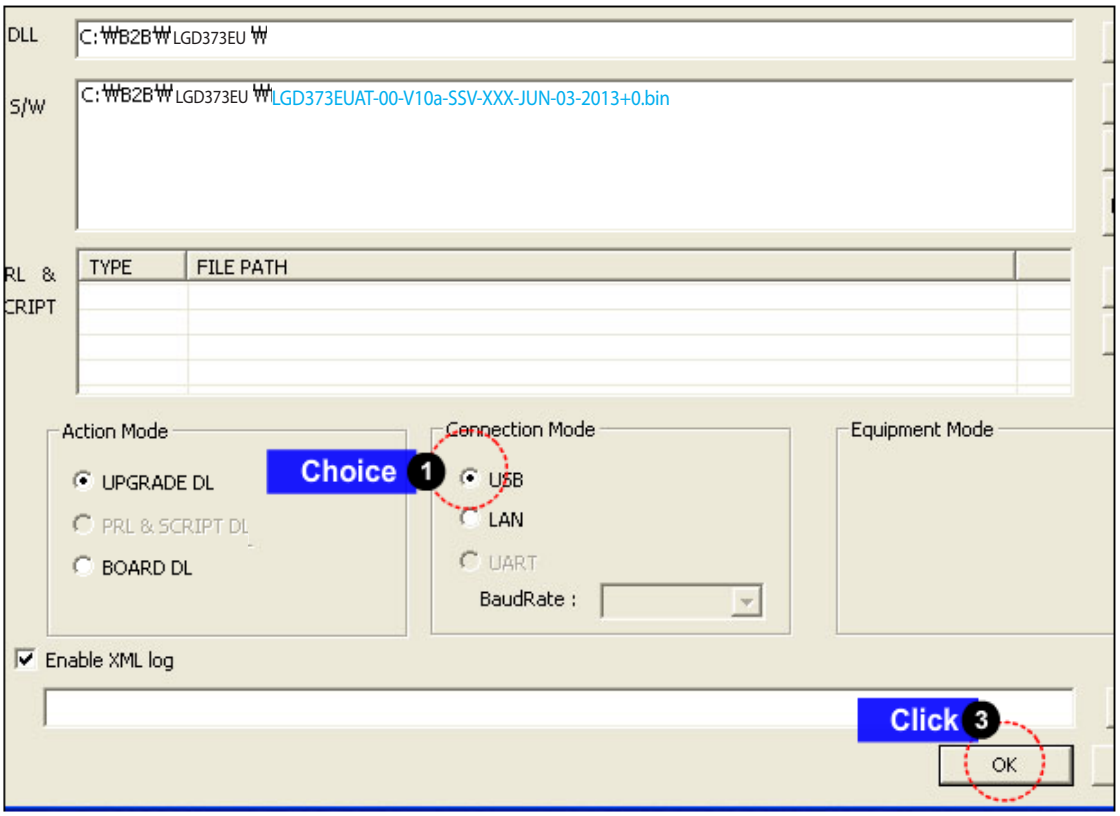

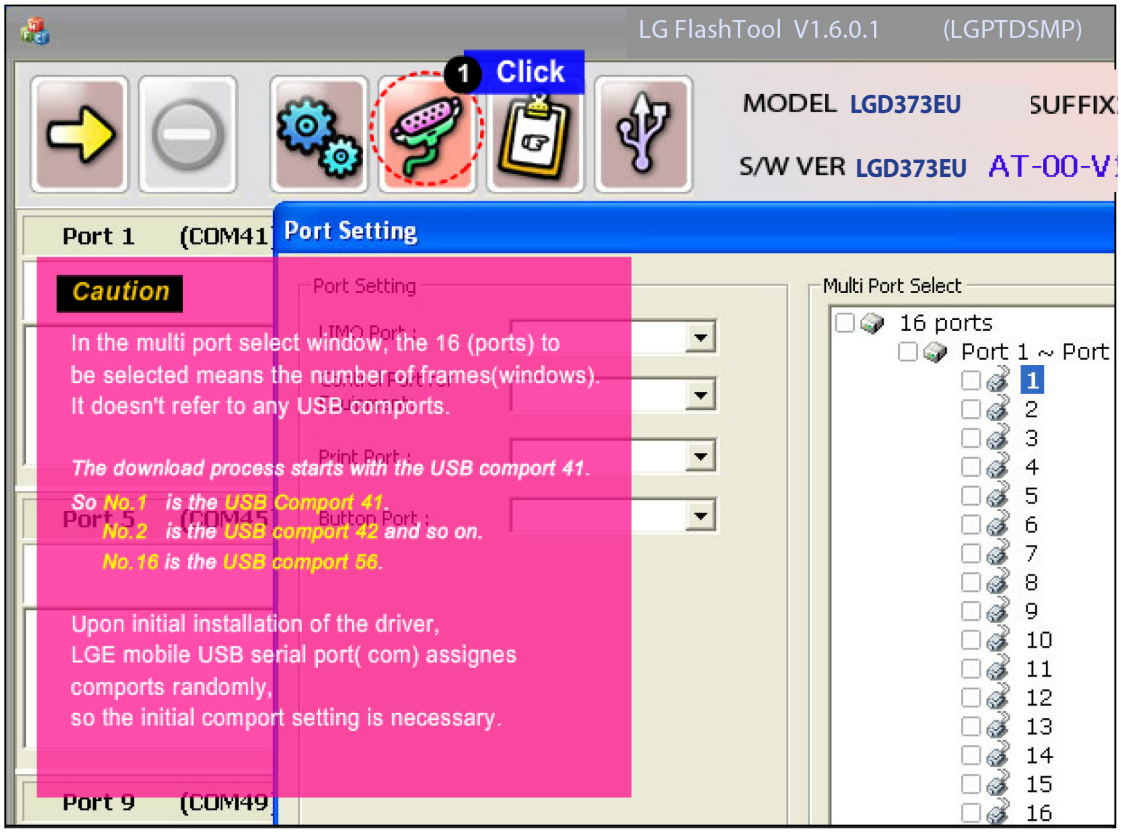

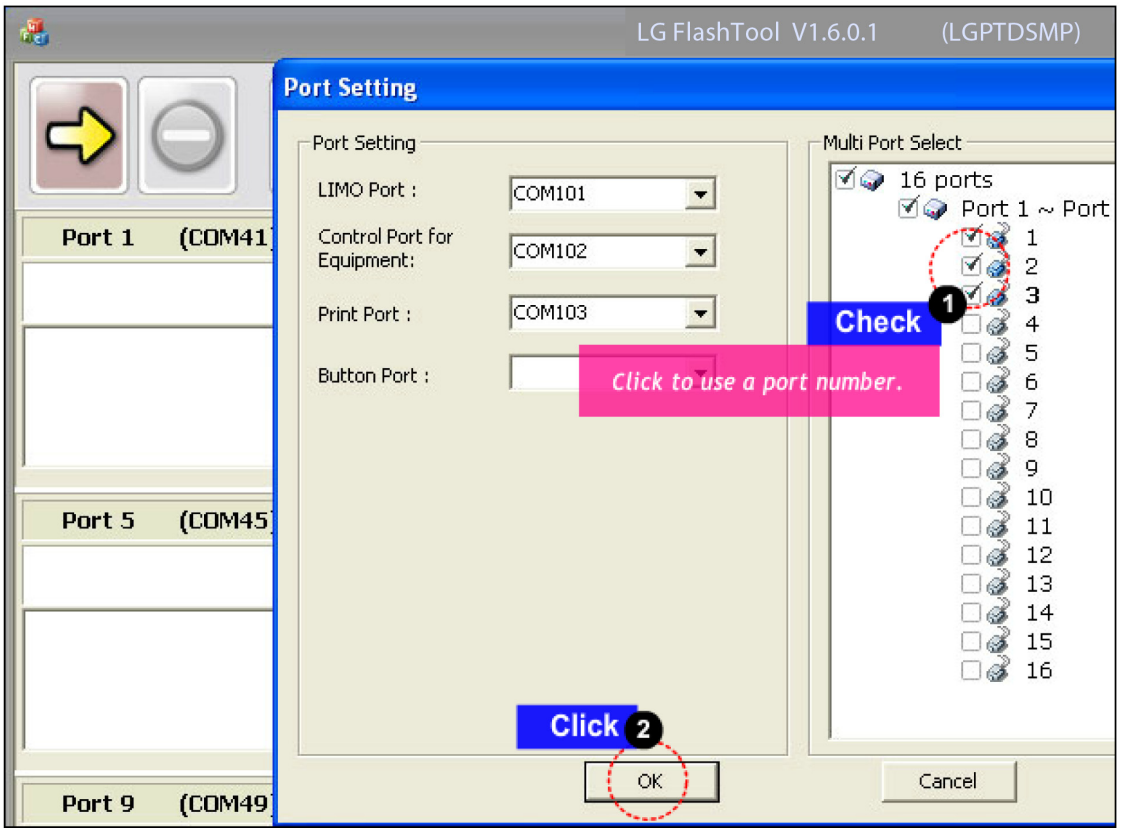

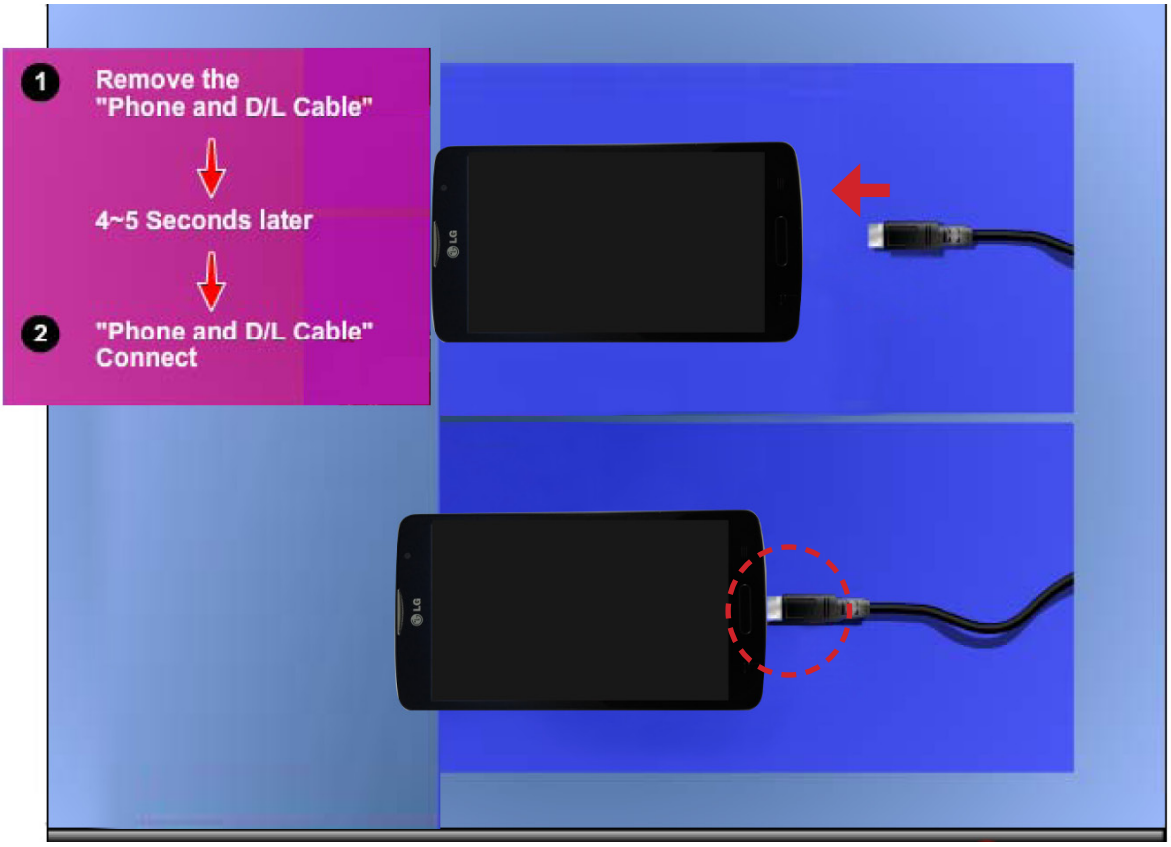

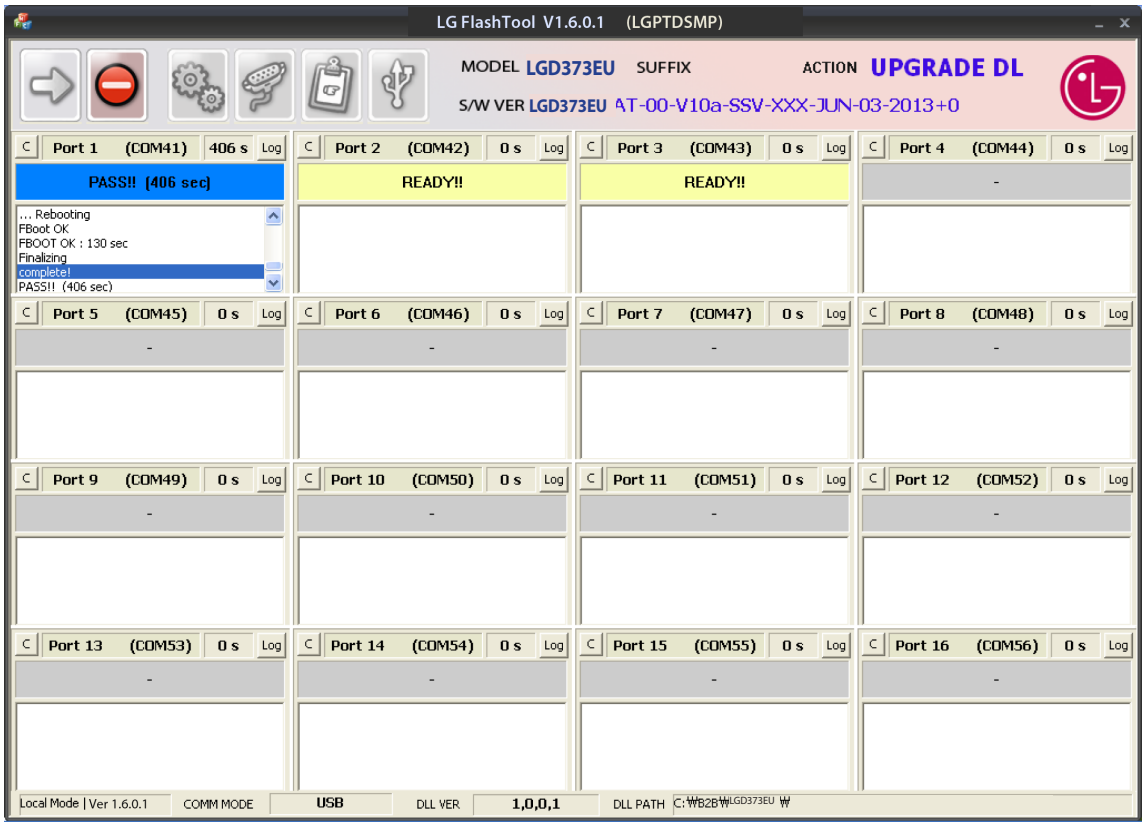

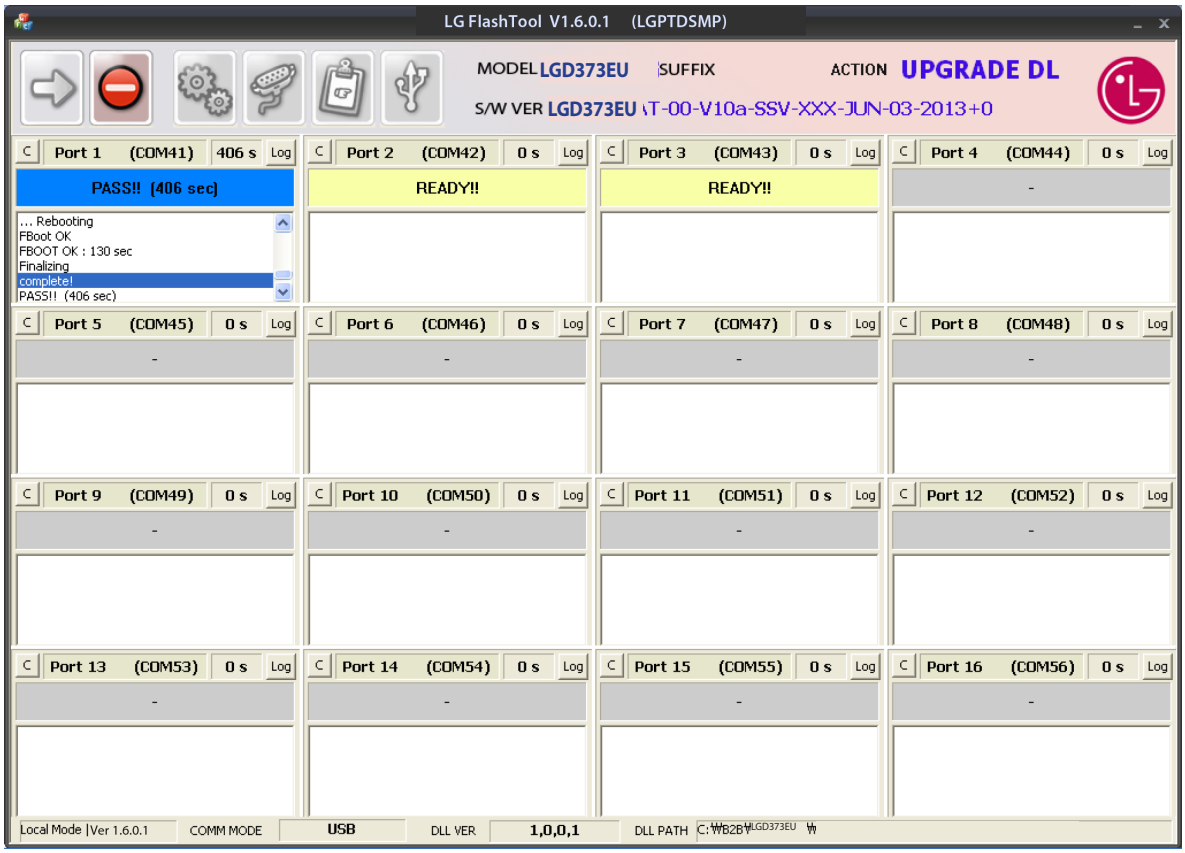

5. BLOCK DIAGRAM

[D373EU] Total Block Diagram

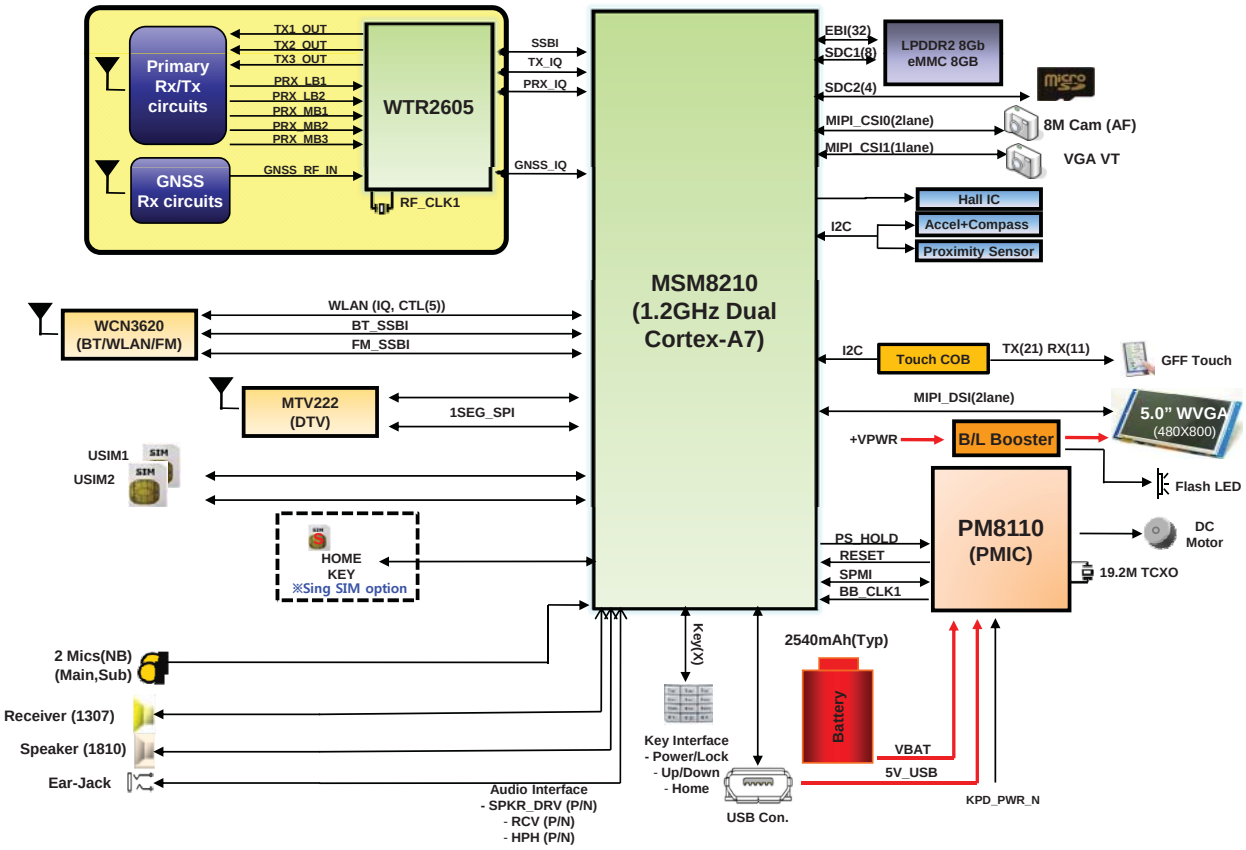

[D373EU] RF Block Diagram

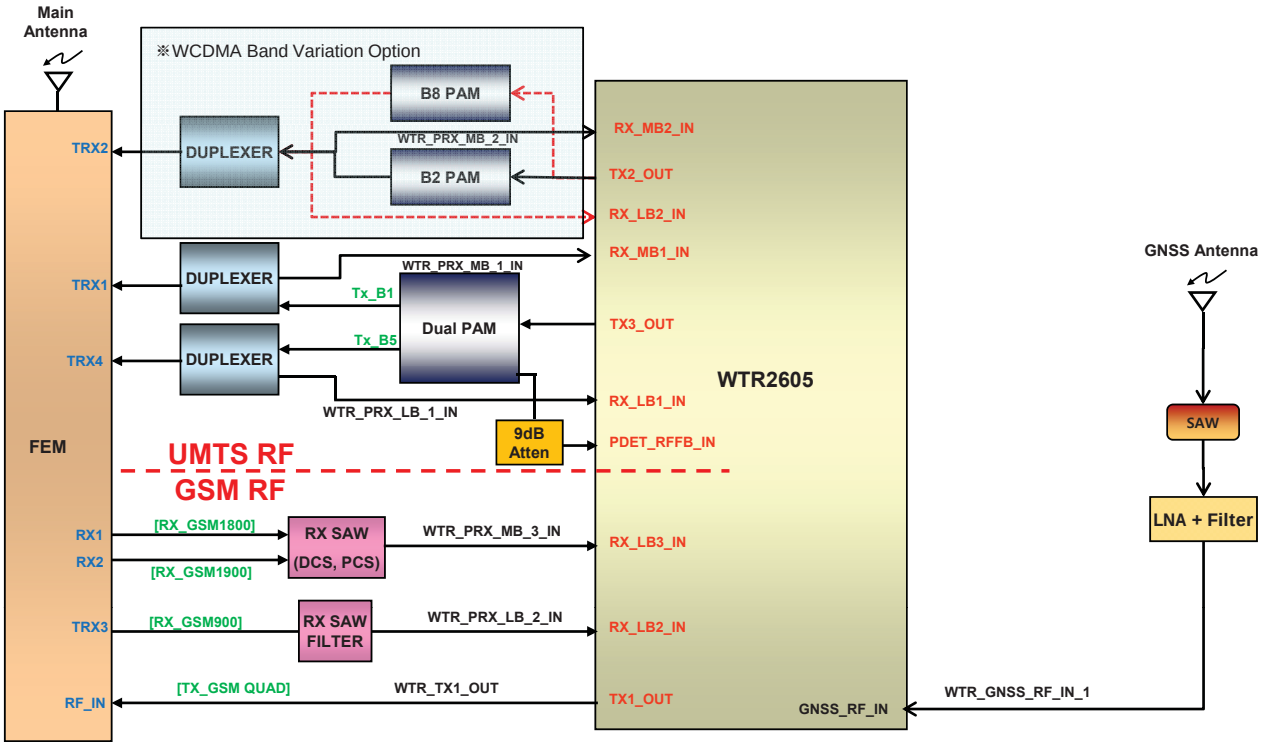

[D373EU] RF(GSM)

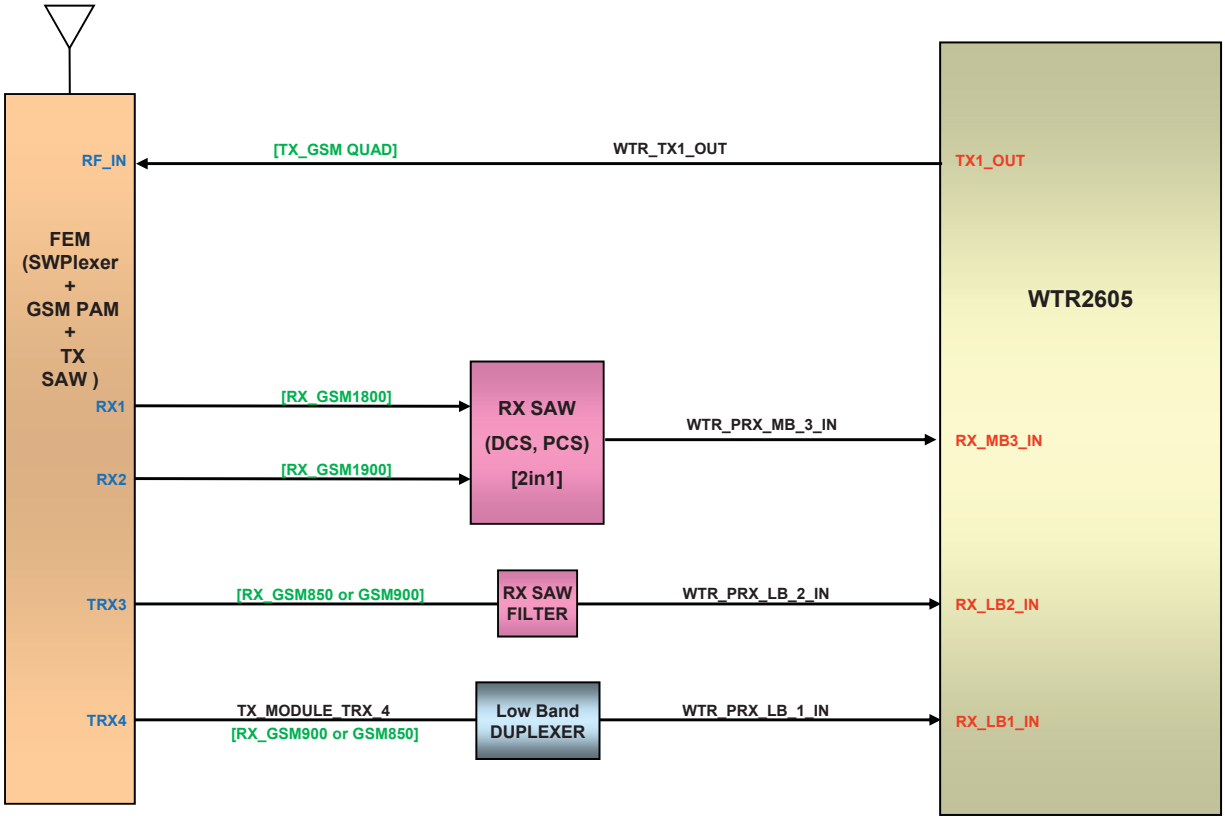

[D373EU] RF(WCDMA)

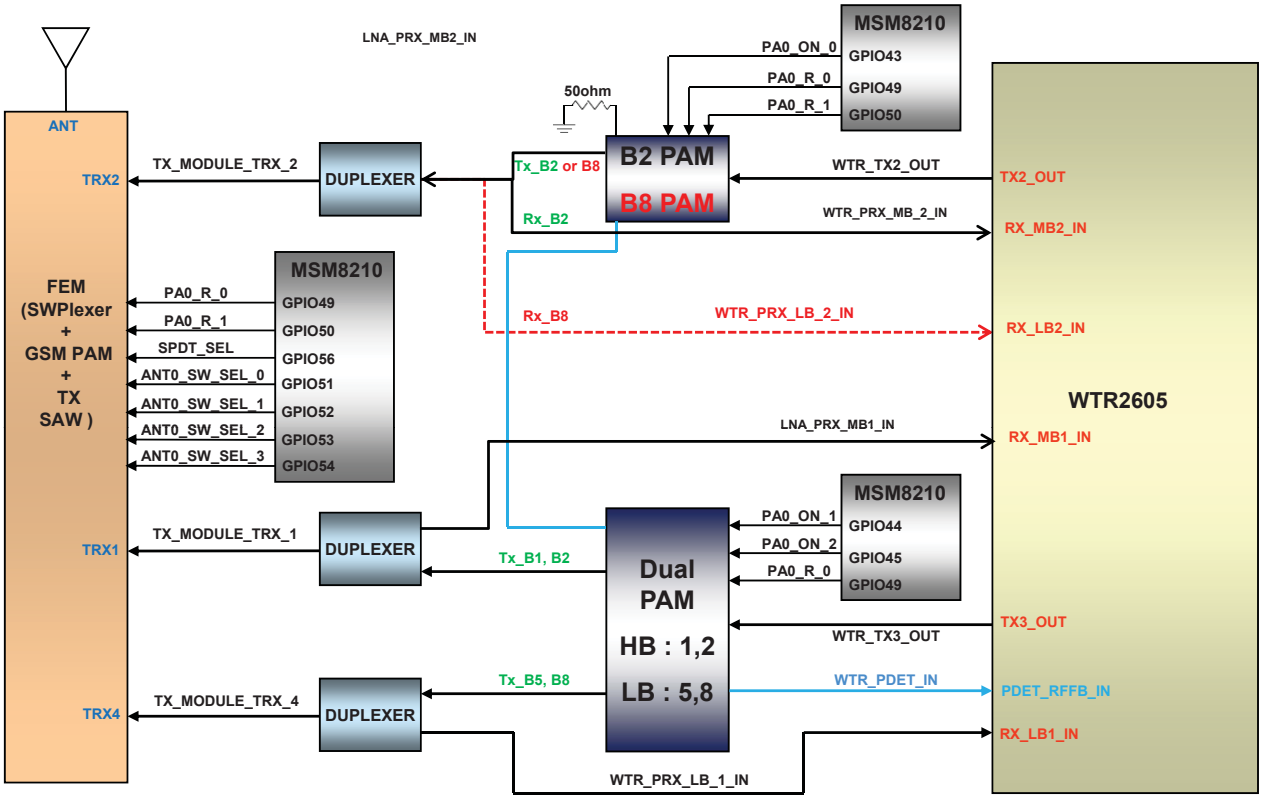

[D373EU] BT/Wifi

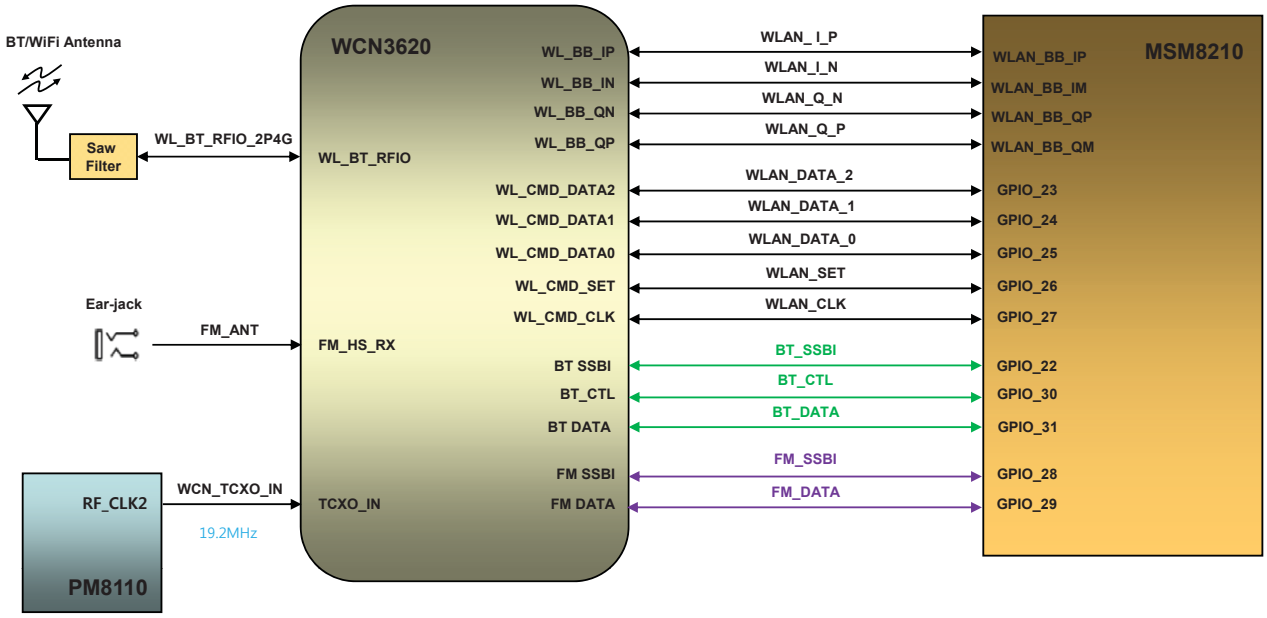

[D373EU] Power

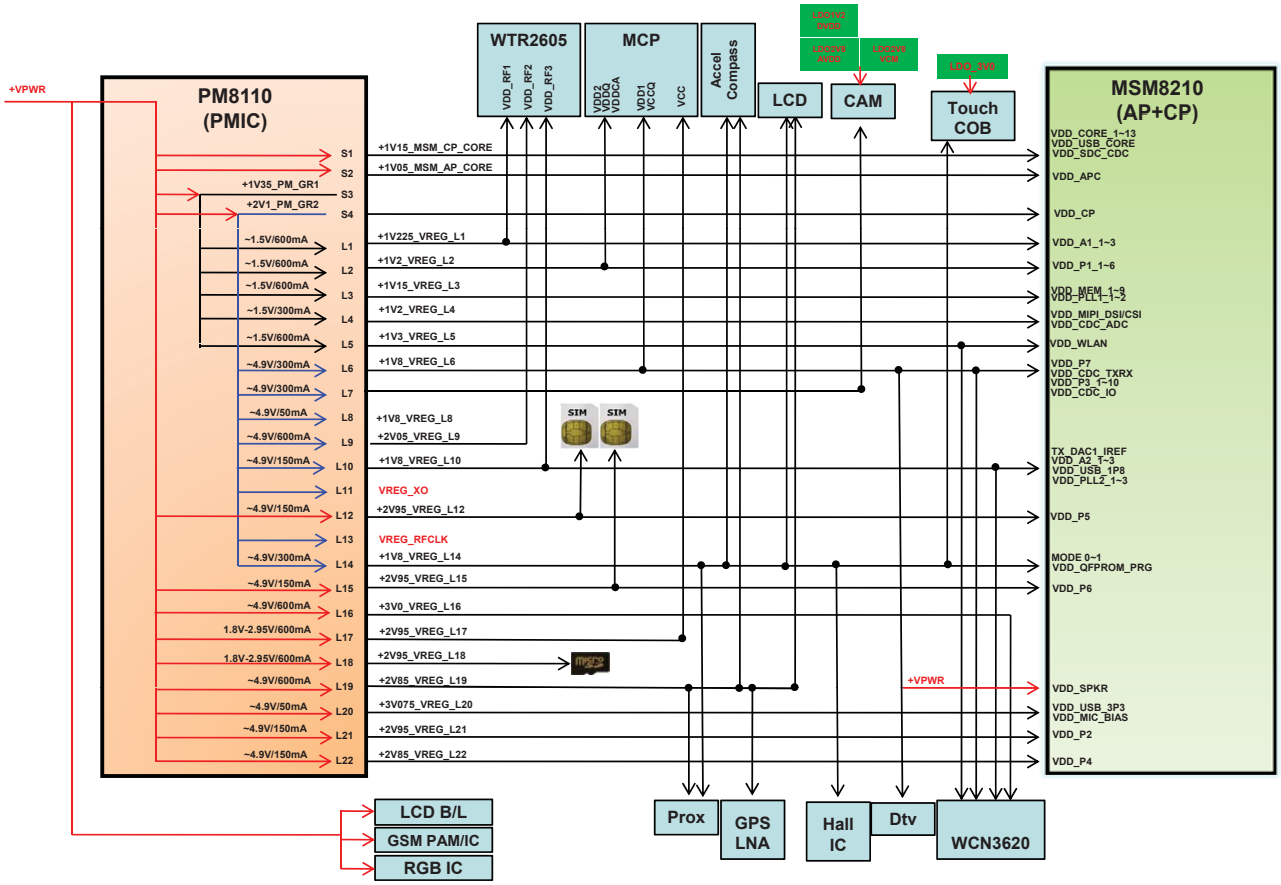

[L70_D373EU] Clock

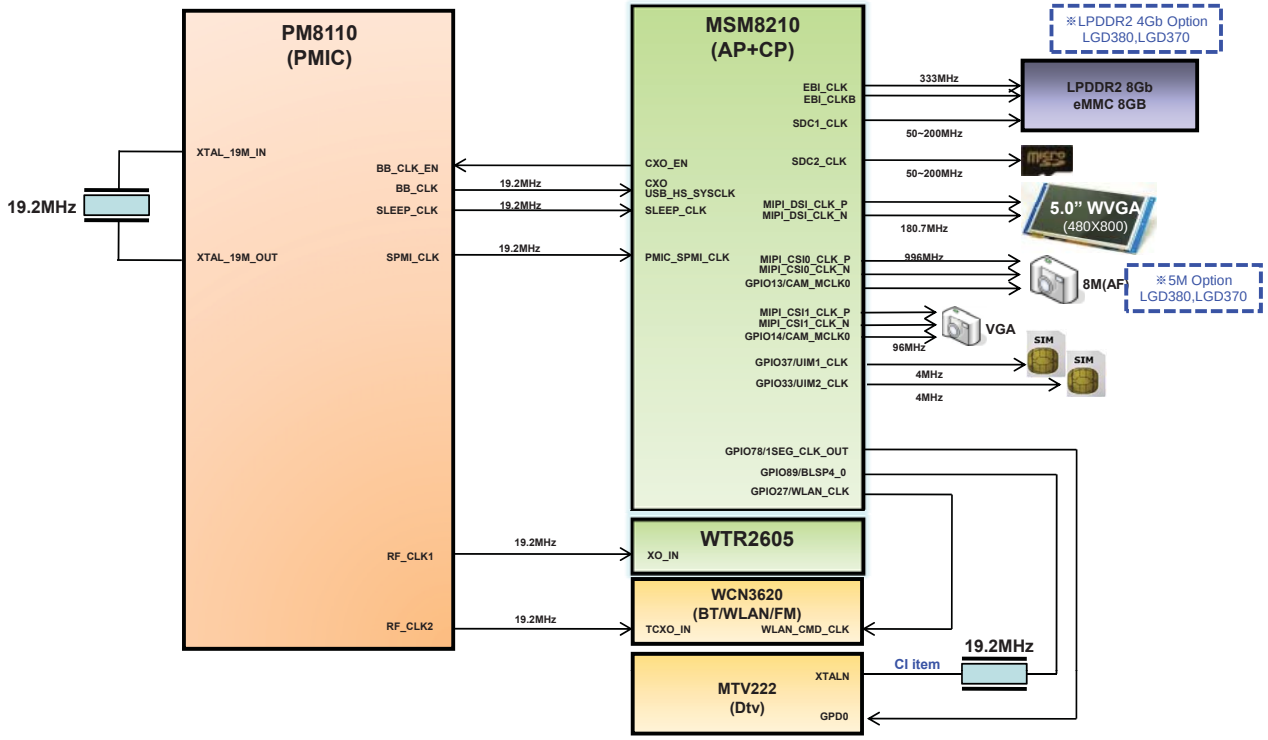

[D373EU] Audio

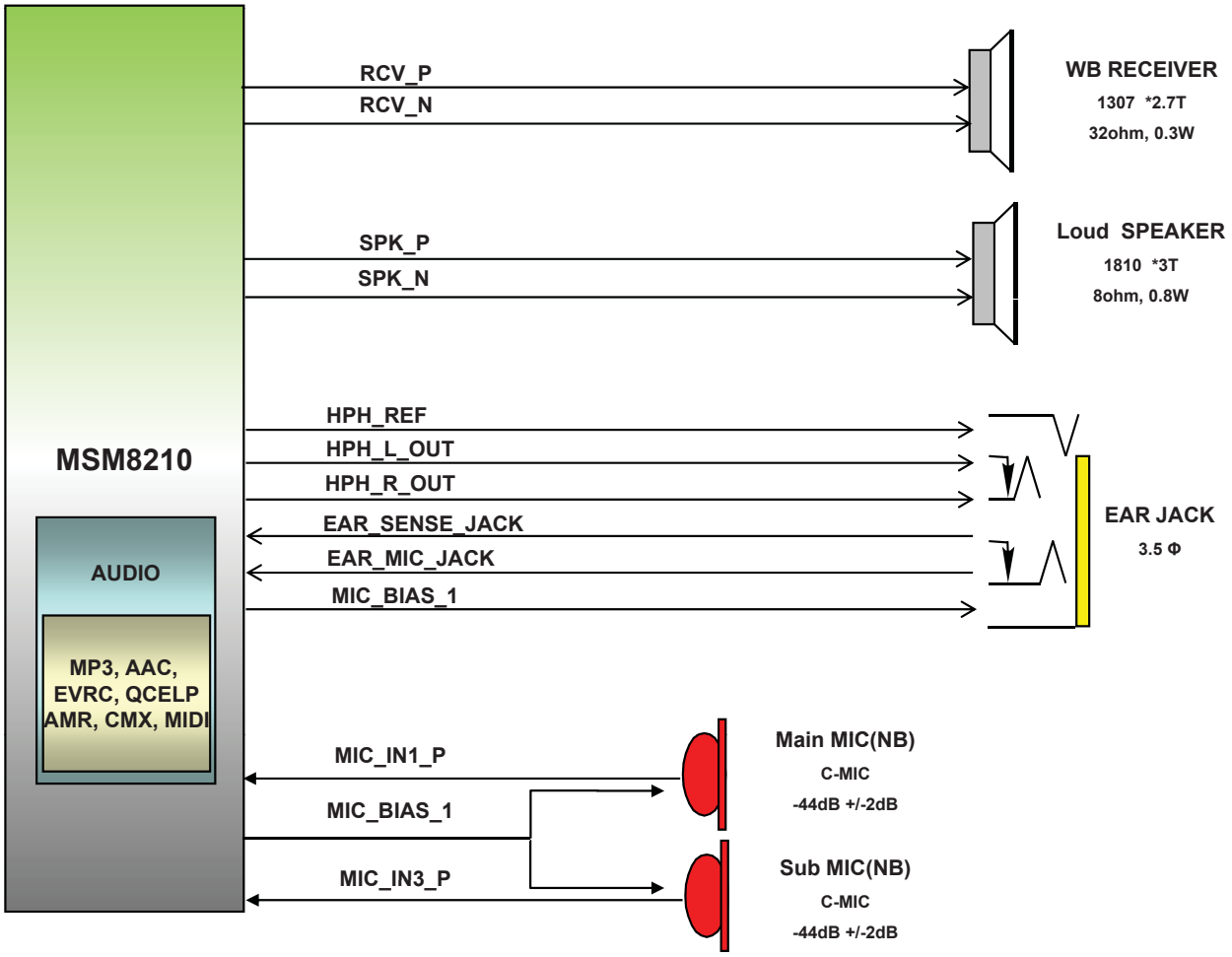

[D373EU] LCD/Camera

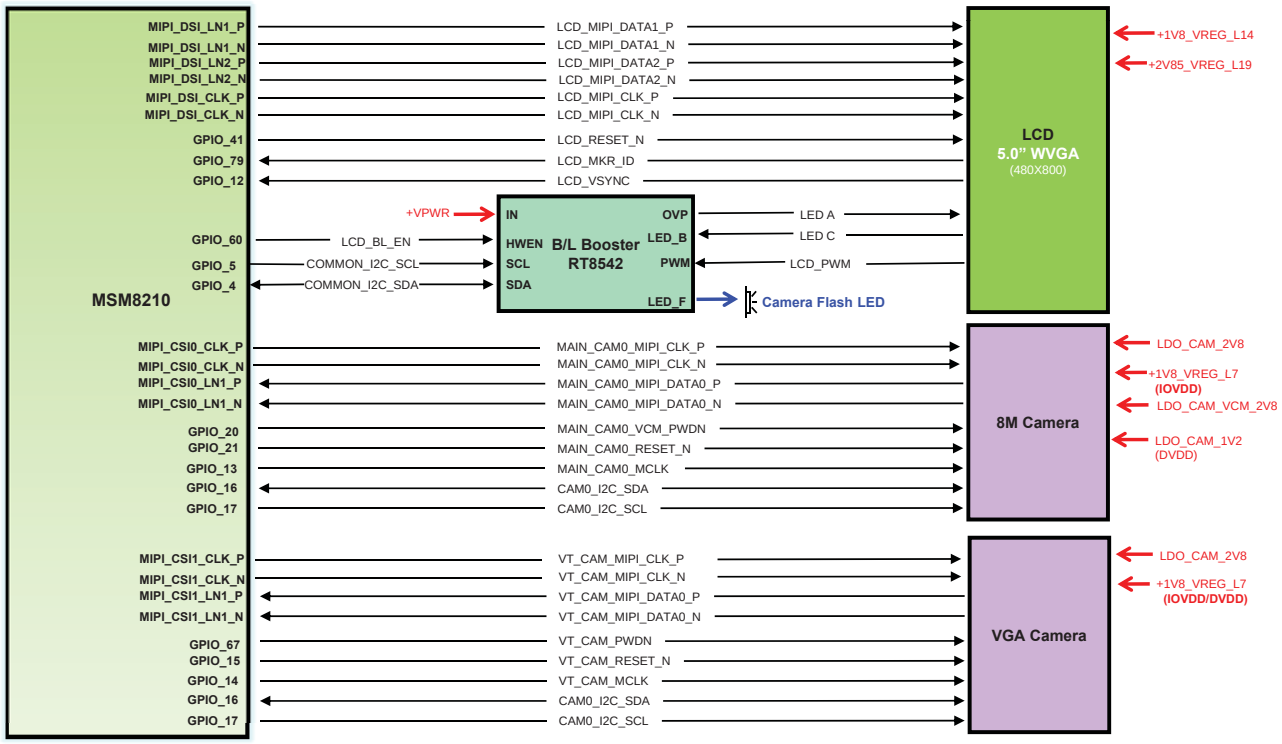

[D373EU] MCP/Peripherals

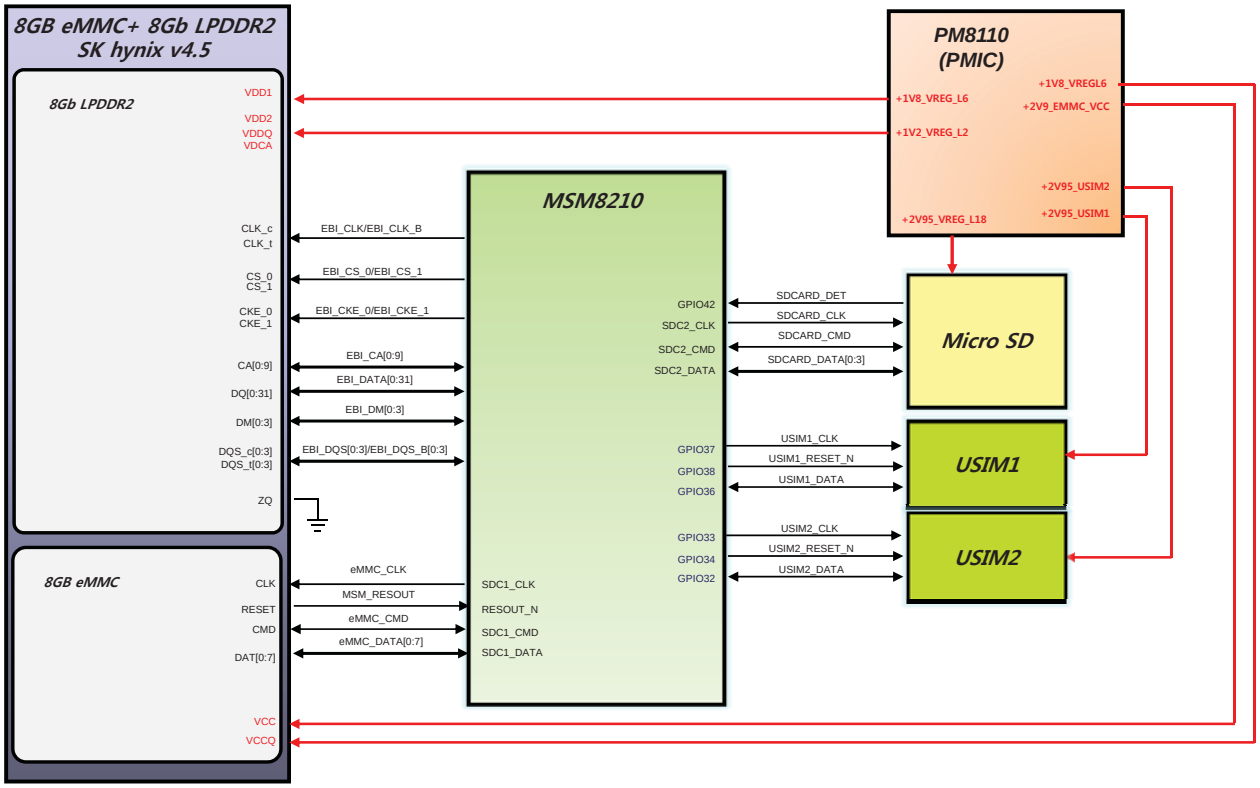

[D373EU] Sensors

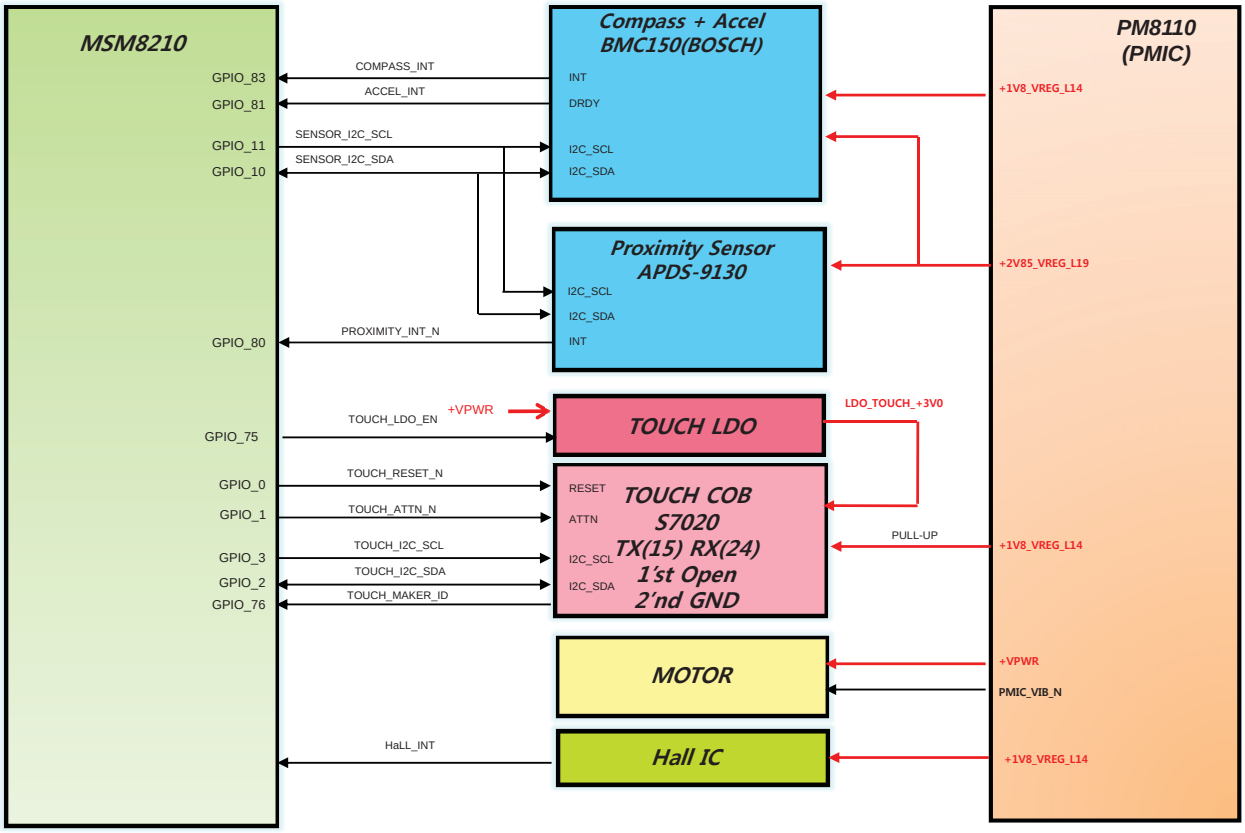

6. CIRCUIT DIAGRAM

< 1-1-1-1_ANT_GSM_WCDMA > Rev_0.6

ANT1 (GSM Quad / WCDMA B1, B2, B5, B8)

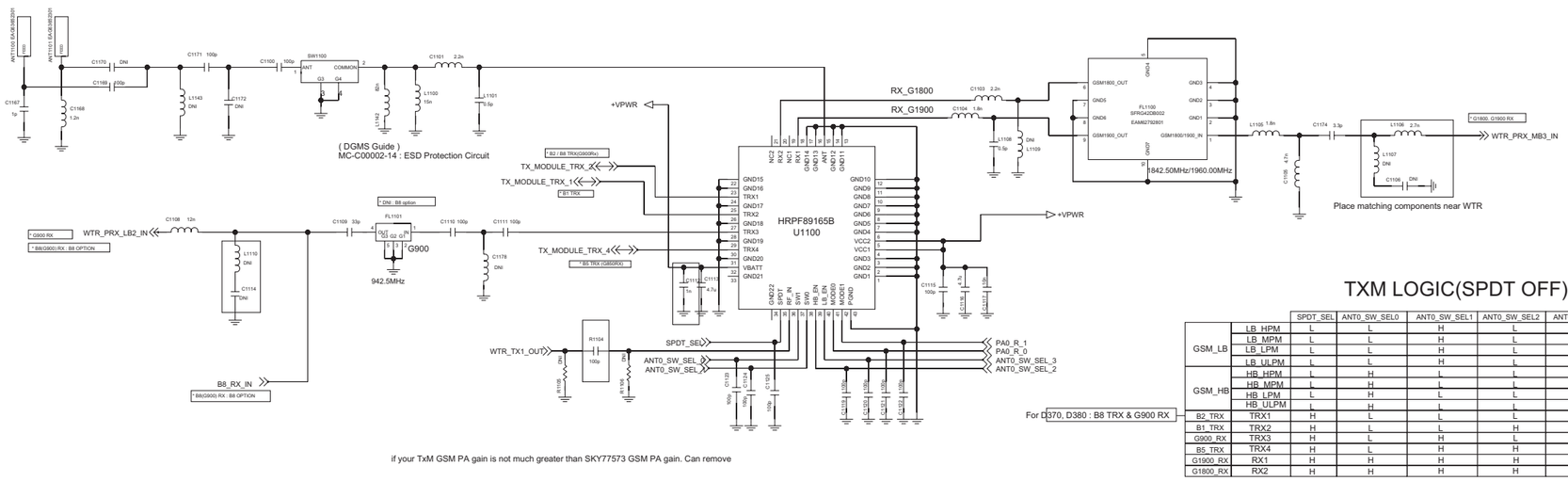

TXM LOGIC(SPDT OFF)

		SPDT_SEL	ANT0_SW_SEL0	ANT0_SW_SEL1	ANT0_SW_SEL2	ANT0_SW_SEL3	PA0_R0	PA0_R1
GSM_LB	LB_HPM	L	L	H	L	L	L	L
	LB_MPM	L	L	H	L	L	L	H
	LB_LPM	L	L	H	L	L	H	L
	LB_ULPM	L	L	H	L	L	H	H
GSM_HB	HB_HPM	L	H	L	L	L	L	L
	HB_MPM	L	H	L	L	L	L	H
	HB_LPM	L	H	L	L	L	H	L
	HB_ULPM	L	H	L	L	L	H	H
B2_TRX	TRX1	H	L	L	L	L	-	-
B1_TRX	TRX2	H	L	L	H	L	-	-
G900_RX	TRX3	H	L	H	L	L	-	-
B5_TRX	TRX4	H	L	H	H	L	-	-
G1900_RX	RX1	H	H	H	H	L	-	-
G1800_RX	RX2	H	H	H	H	H	-	-

ANT3 (GNSS)

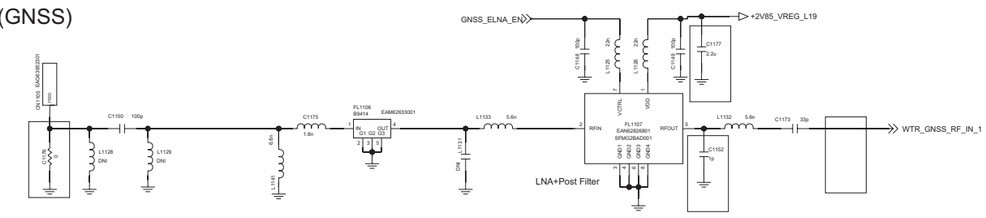

GND CONTACT

< 1-1-3-1_RFIC_WTR2605 > Rev_0.5

	D373, D375	D370, D380, D373EU	D385
WTR2605	B1, B2, B5	B1, B5, B8	B1, B5
TX1_OUT	GSM	GSM	GSM
TX2_OUT	B2	B8	
TX3_OUT	B1, B5	B1, B5	B1, B5
RX_LB1_IN	B5,G850	B5,G850	B5,G850
RX_LB2_IN	G900	B8,G900	G900
RX_MB1_IN	B1	B1	B1
RX_MB2_IN	B2		
RX_MB3_IN	G1800,G1900	G1800,G1900	G1800,G1900

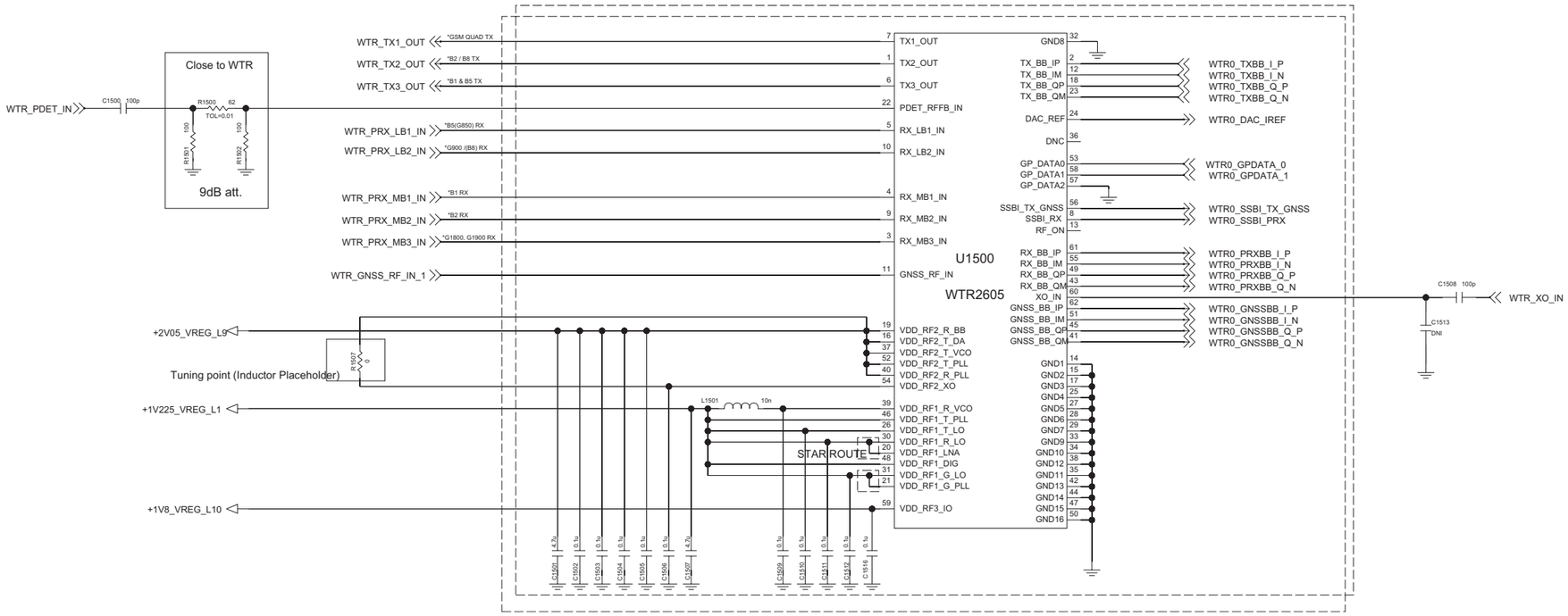

< 1-1-4-1 TRX_WCDMA_B1_B5_B8 TRIPLE > Rev 0.4

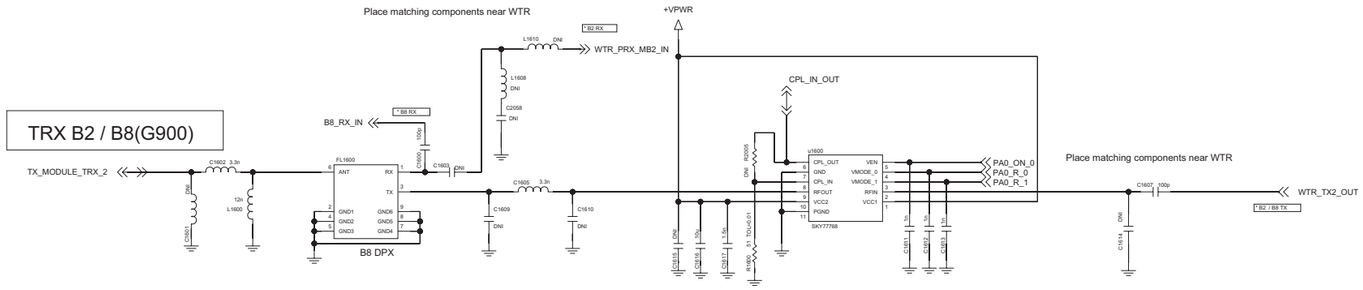

W-BAND	DPX	PAM
B2	EAM62810601	EAN62629801
B8	EAM62711101	EAN62733701

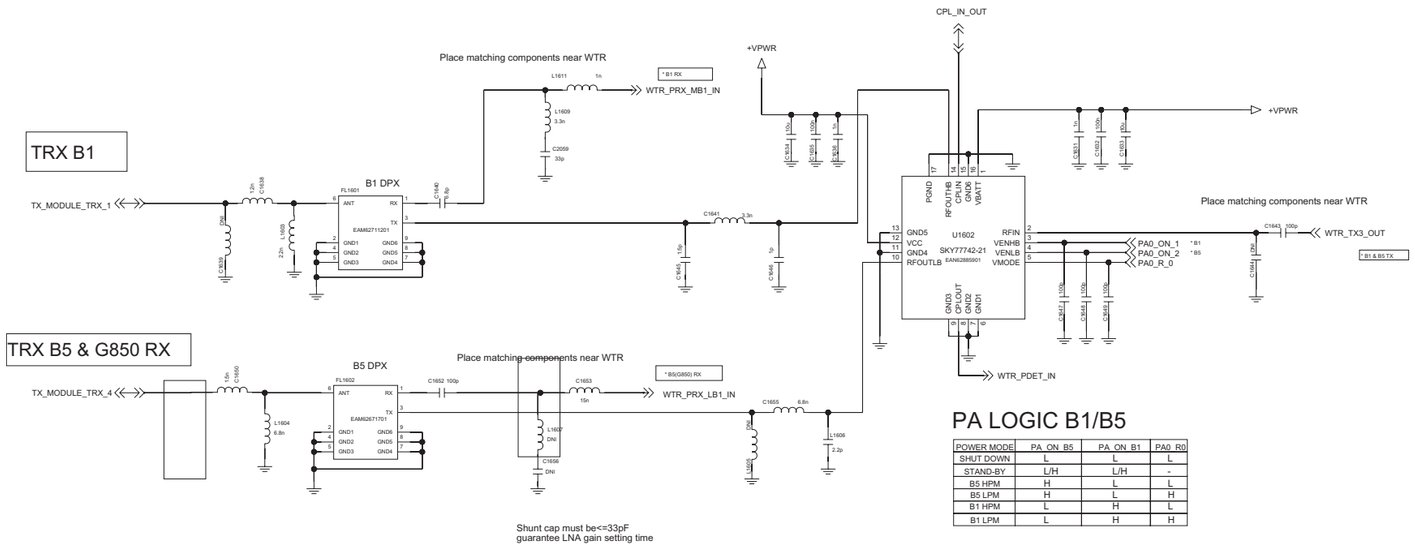

PA LOGIC B1/B5

POWER MODE	PA_ON_B5	PA_ON_B1	PA0_R0
SHUT DOWN	L	L	L
STAND-BY	L/H	L/H	-
B5 HPM	H	L	L
B5 LPM	H	L	H
B1 HPM	L	H	L
B1 LPM	L	H	H

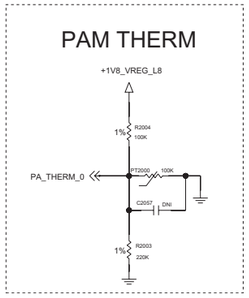

<2-1-4-1-1_MSM8210_CONTROL> REV.1.0

W/ RxD

CCDS CARD Information	
Release Date	2013. 08. 31
Based on Reference Schematic	Rev.C
80-ND717-41 MSM8X10 + PM8110 REFERENCE SCHEMATIC	

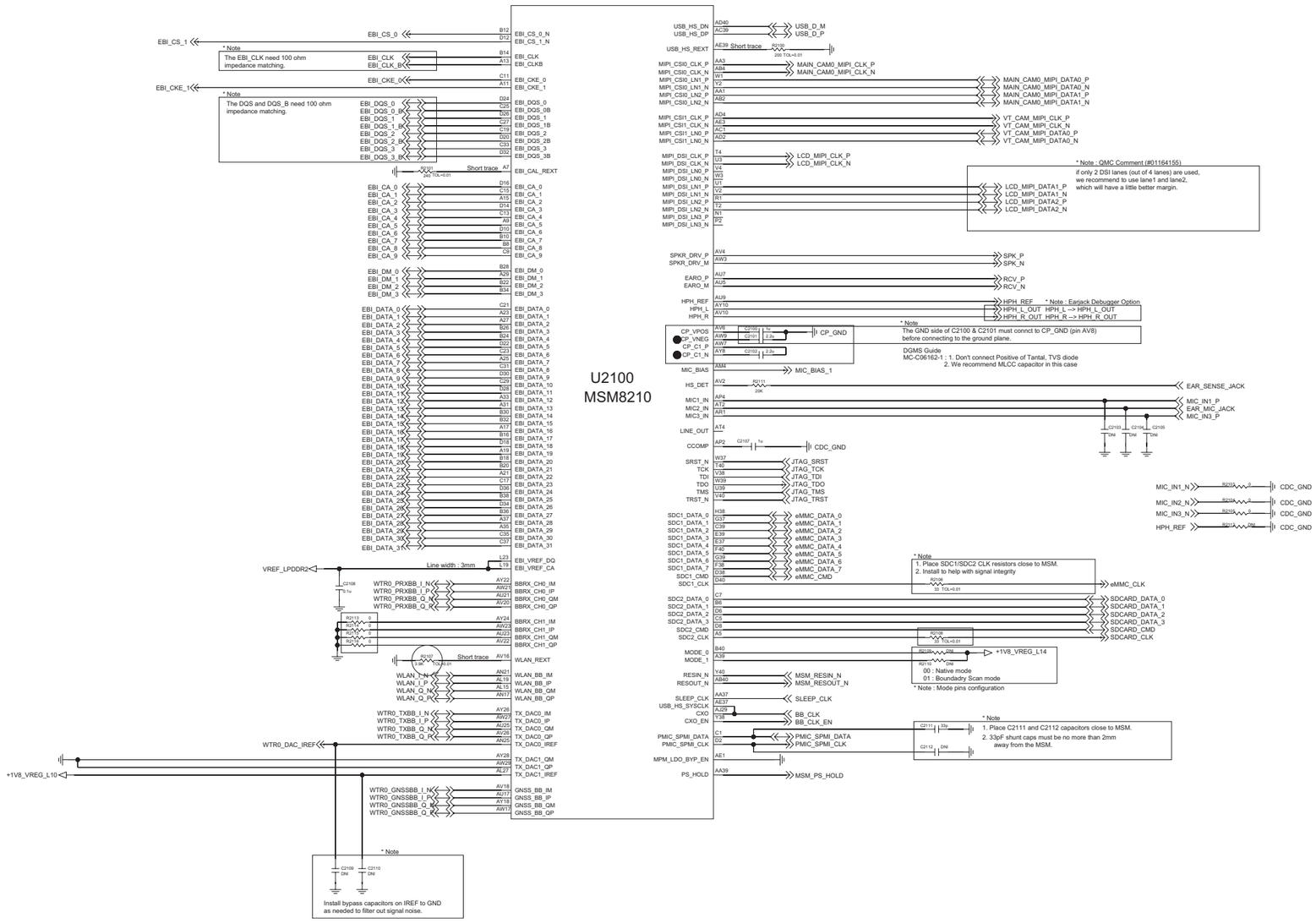

<2-1-4-1-2_MSM8210_GPIO> REV.1.0
W/ RxD

CCDS CARD Information	
Release Date	2013. 08. 31
Based on Reference Schematic	Rev.C
80-ND717-41 MSM8X10 + PM8110 REFERENCE SCHEMATIC	

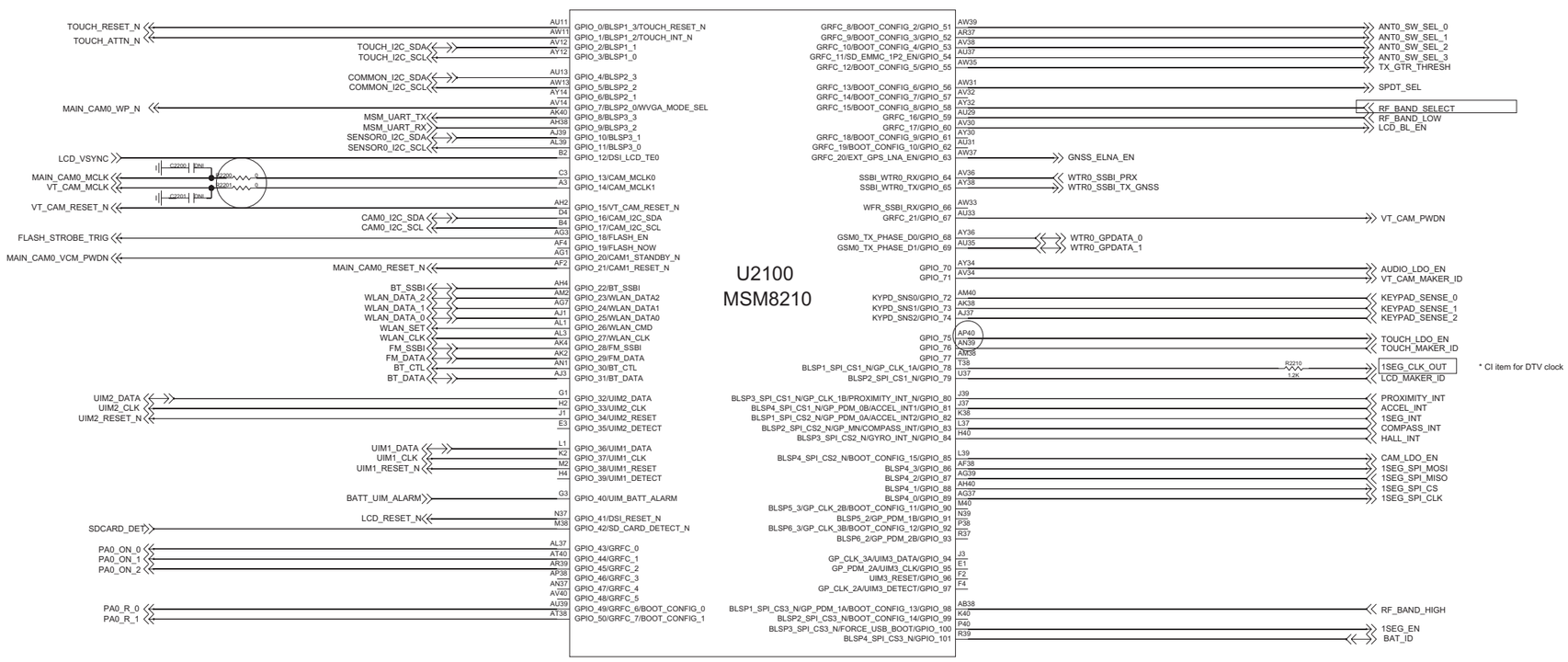

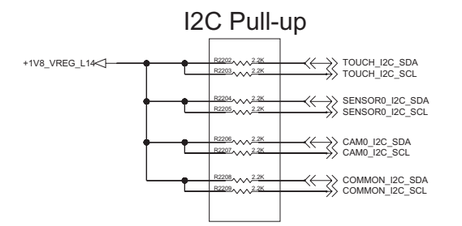

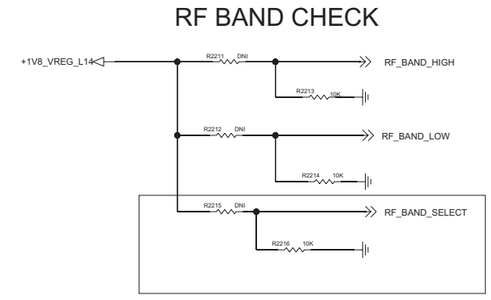

* Note : Secured Boot related GPIOs

1. Do not have pull-ups on the following GPIOs unless intended for boot or secure-boot related configurations : GPIO_61, 62, 85, 90, 92, 98, 99, 100
2. The boot-up problem may happen by external pull-up circuit on these secure-boot related GPIOs

<2-1-4-1-3_MSM8210_POWER> REV.1.0 W/ RxD

CCDS CARD Information	
Release Date	2013. 08. 31
Based on Reference Schematic	Rev.C
80-ND717-41 MSM8X10 + PM8110 REFERENCE SCHEMATIC	

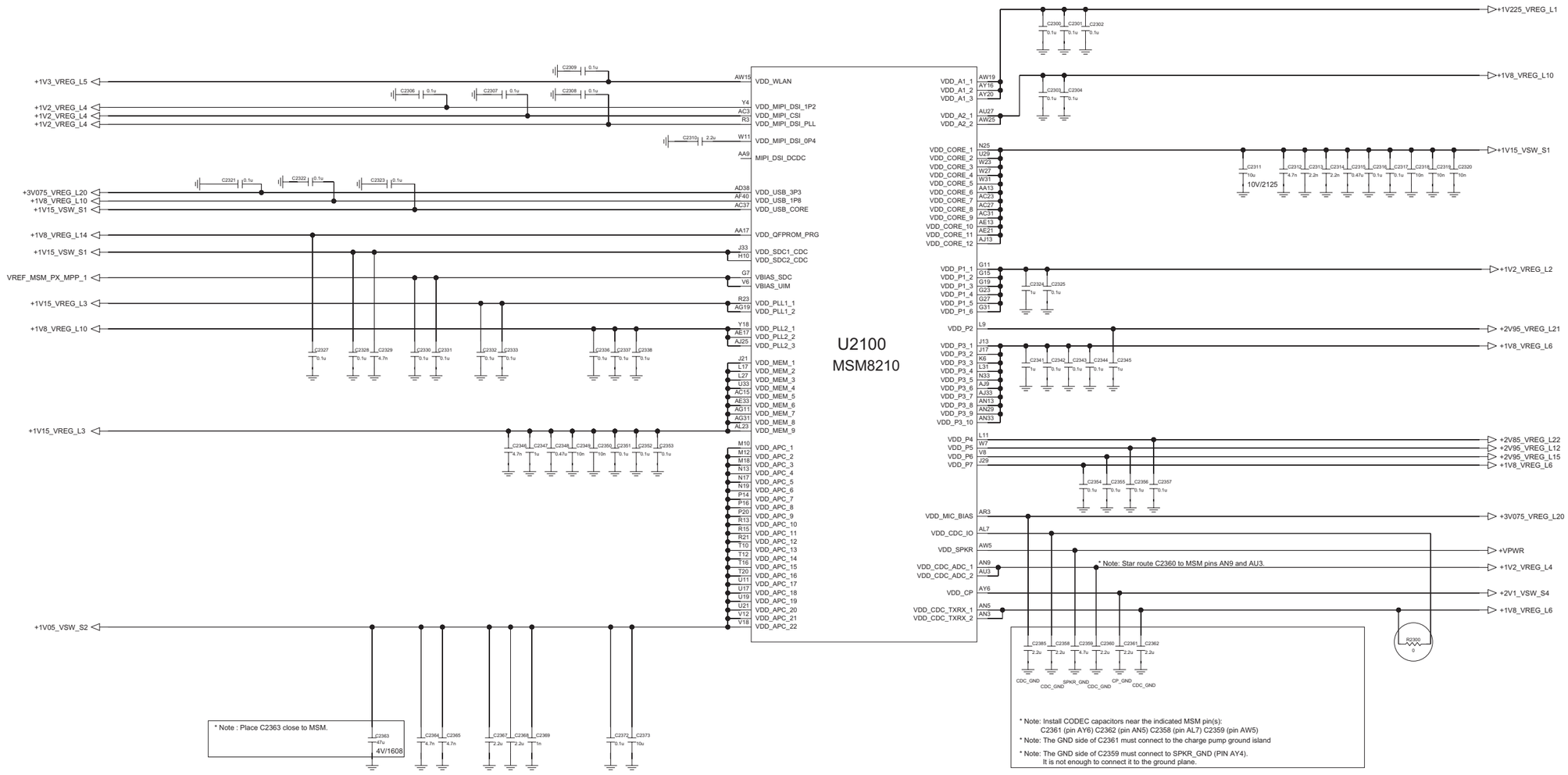

<2-1-4-1-4_MSM8210_GND/NC> REV.1.0

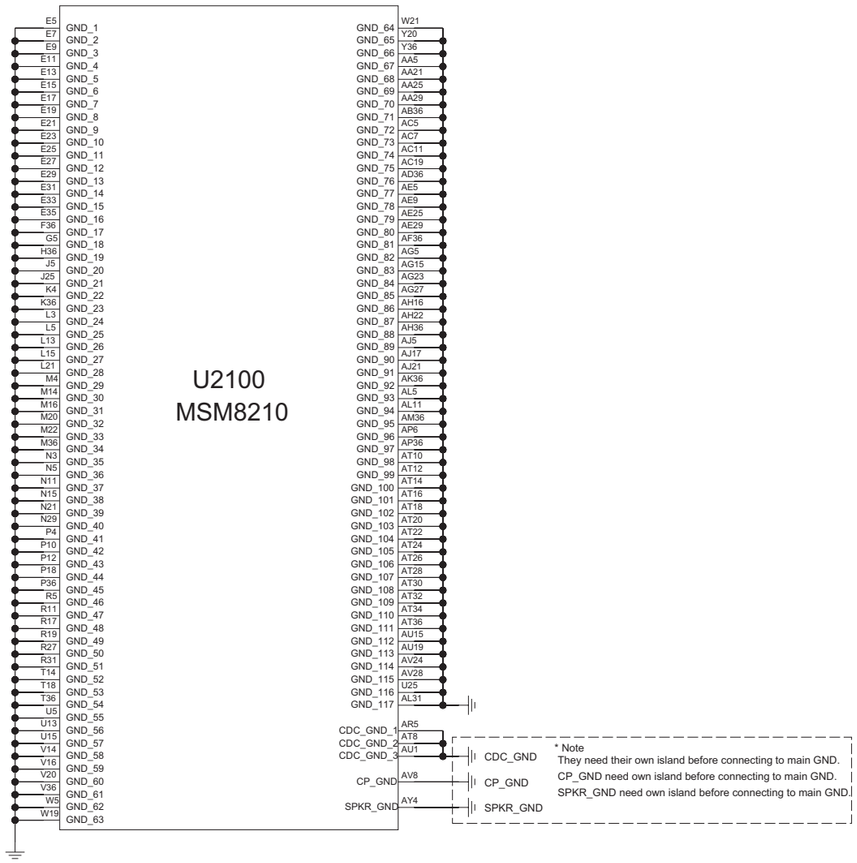

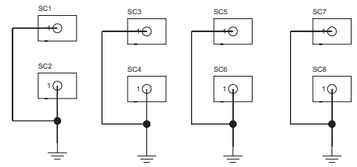

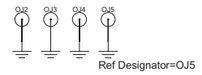

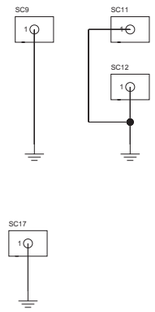

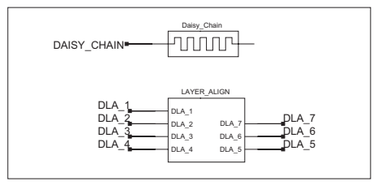

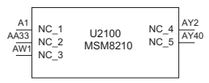

PID

eMMC 4.5 3_3_2_3_5_MCP_eMMC_v4_5_4G_DDR2_8G_SK_Hynix REV.0.4

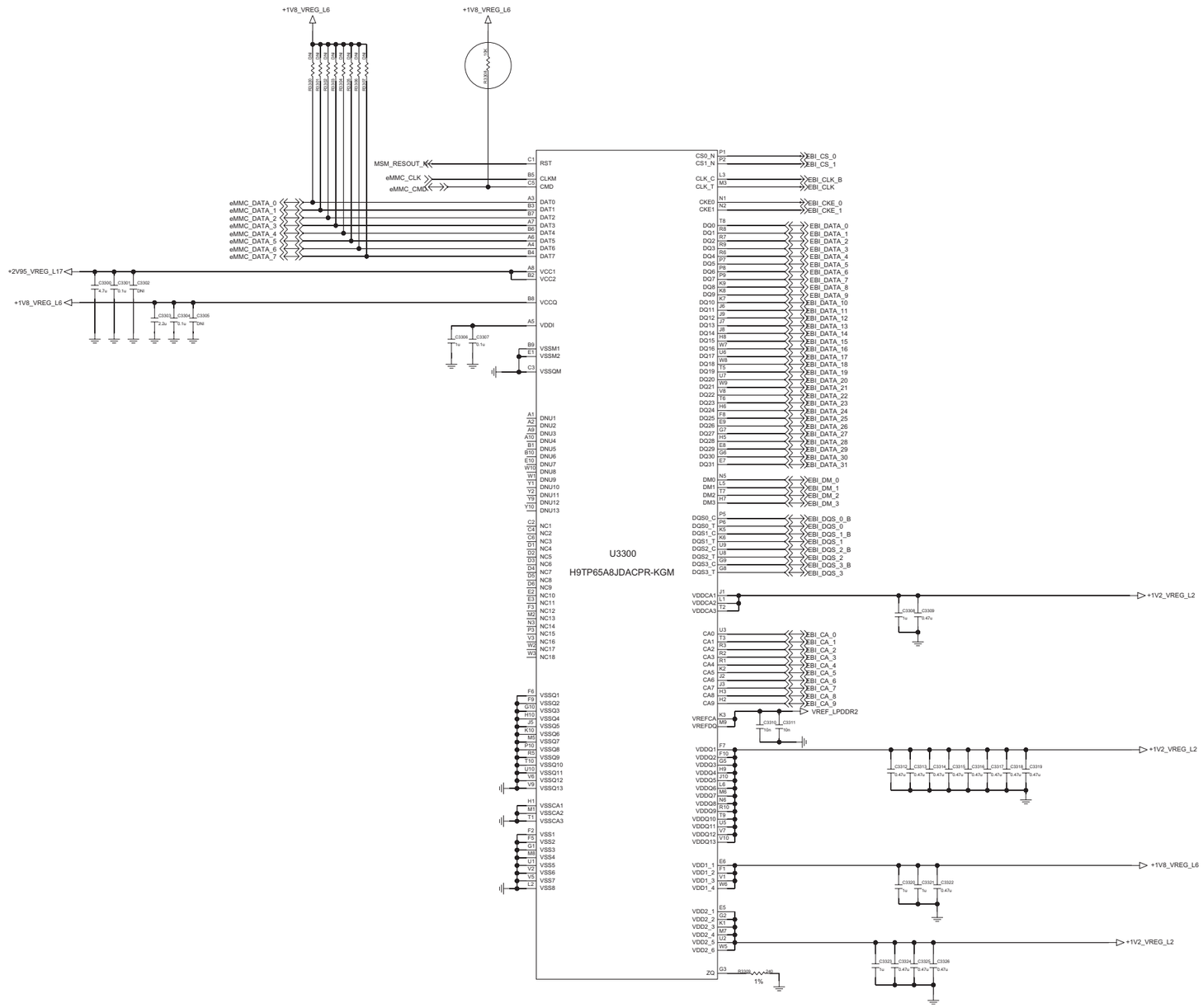

<4-1-4-1_PMIC_PM8110_DATA> REV.1.0

CCDS CARD Information	
Release Date	2013. 08. 31
Based on Reference Schematic	Rev.C
80-ND717-41 MSM8X10 + PM8110 REFERENCE SCHEMATIC	

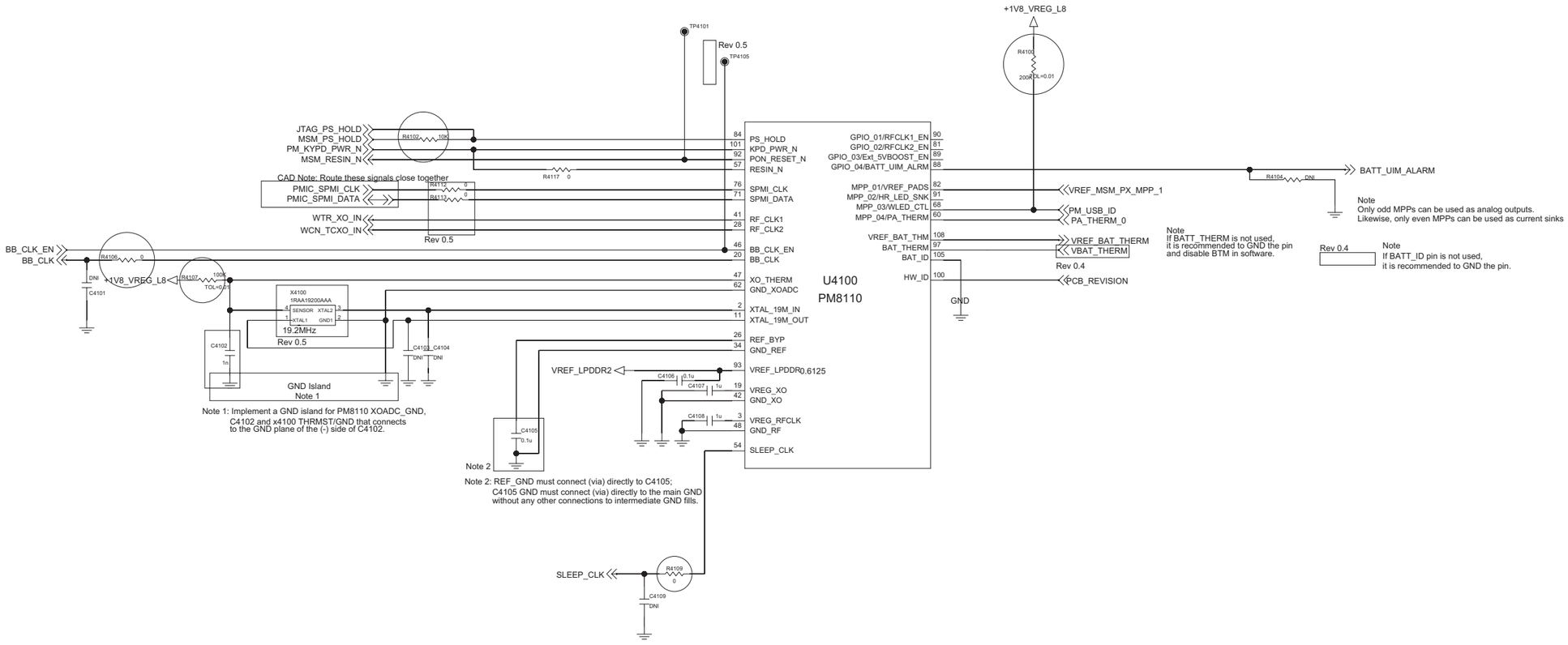

PCB REVISION

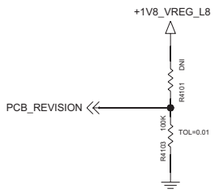

A	100K	20K	0.300
B	100K	27K	0.383
C	100K	39K	0.505
D	100K	51K	0.680
E	100K	75K	0.771
F	100K	100K	0.900
G	100K	130K	1.017
1.0	100K	DNI	1.800
1.1	DNI	100K	0.000

<4-1-4-2_PMIC_PM8110_POWER> REV.0.5

CCDS CARD Information	
Release Date	2013. 08. 31
Based on Reference Schematic	Rev.C
80-ND717-41 MSM8X10 + PM8110 REFERENCE SCHEMATIC	

NEED EXTERNAL OVP(28V)

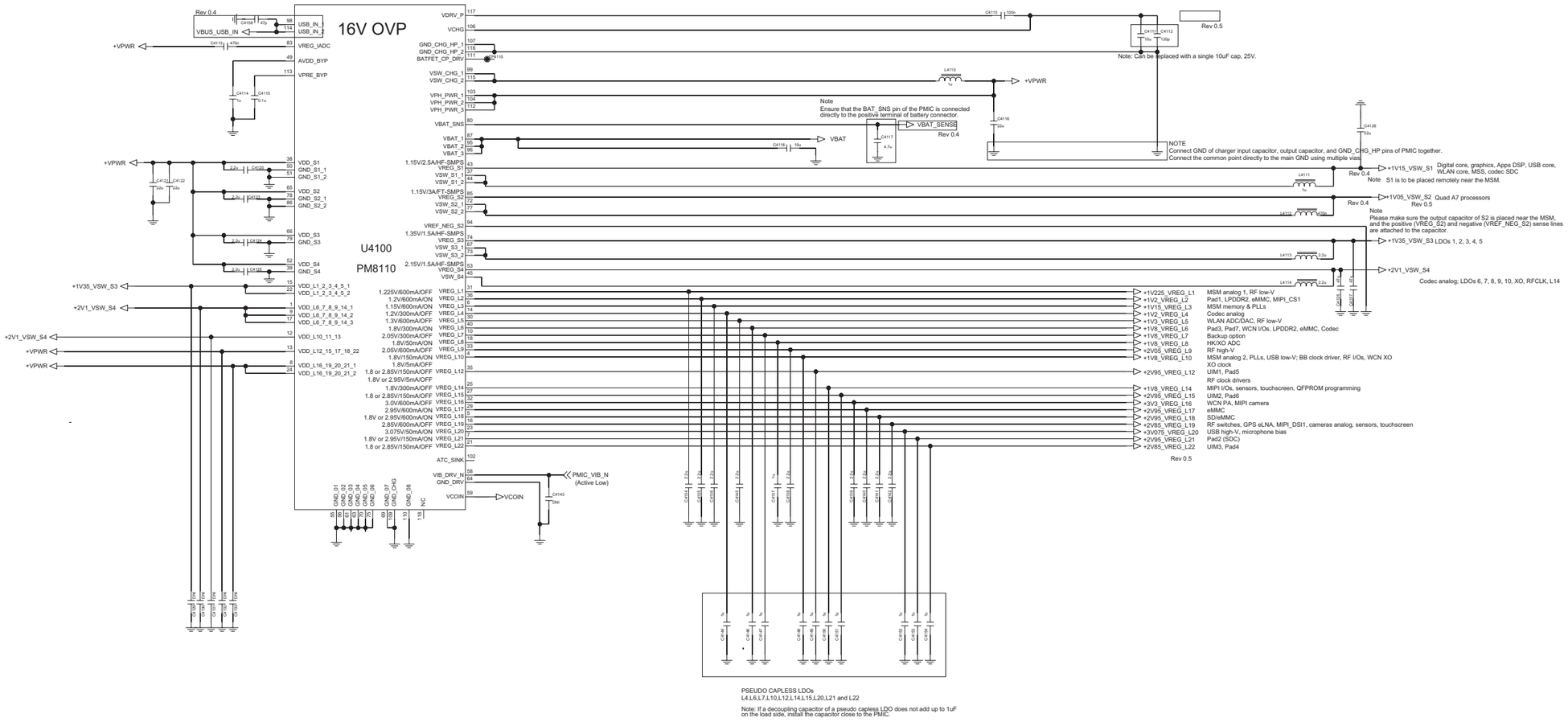

BACKUP BATT

<4-3-2_OVP_MAX14528> REV.0.4

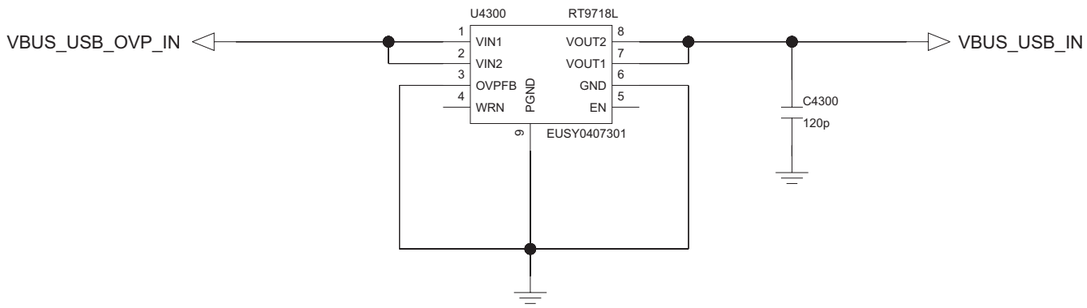

<4-4-3_LCD_Backlight_IC_RT8542> REV_0.3

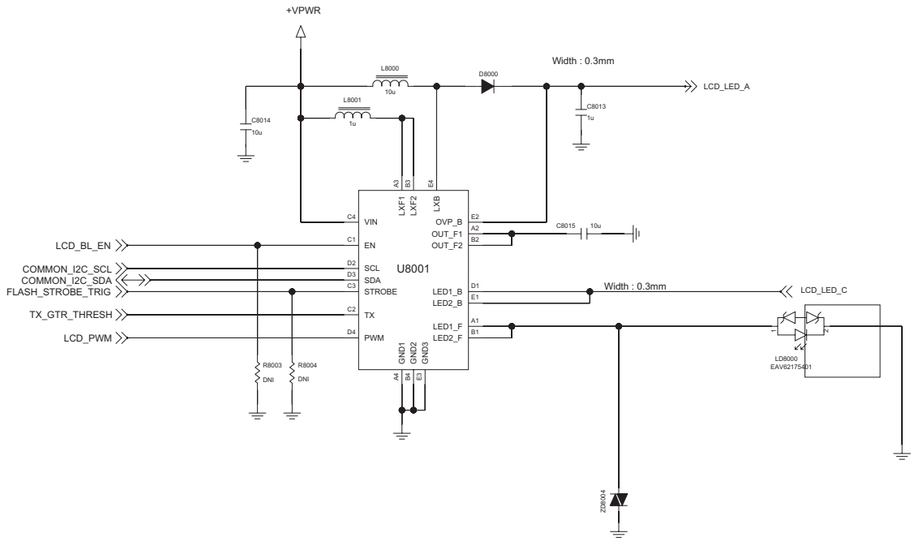

<5-1-1-4> BT_WiFi_Combo_WCN3620 REV.1.0

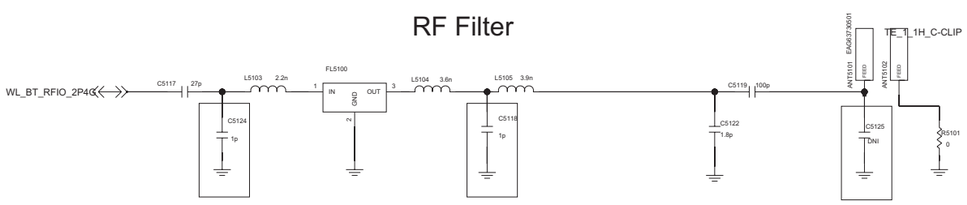

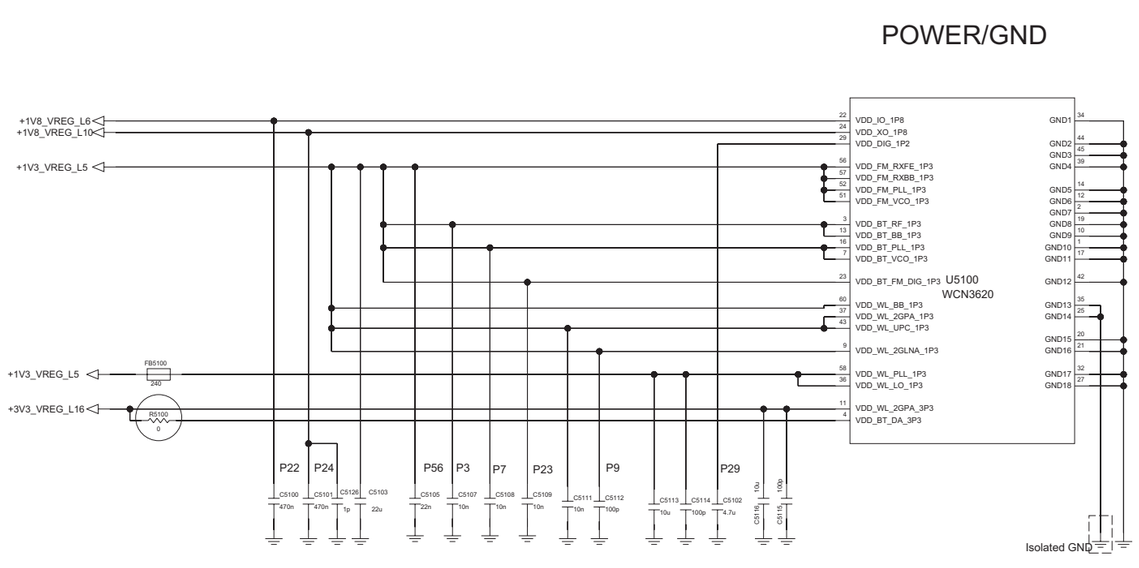

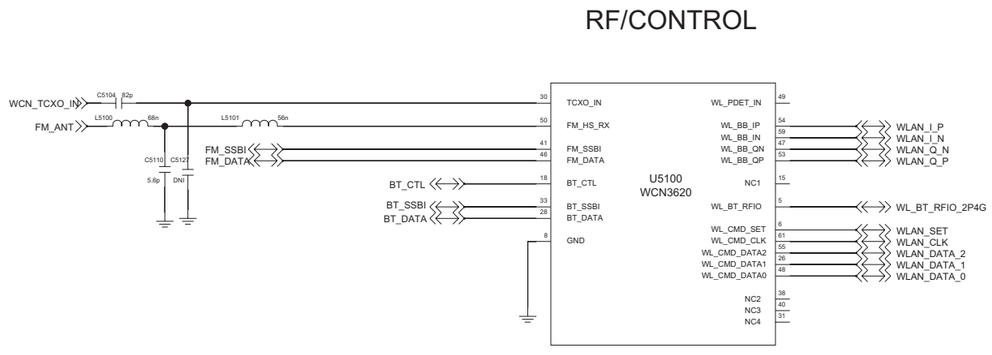

<5-3-1-3_Broadcasting_ONE-SEG_FC8150> REV.0.4

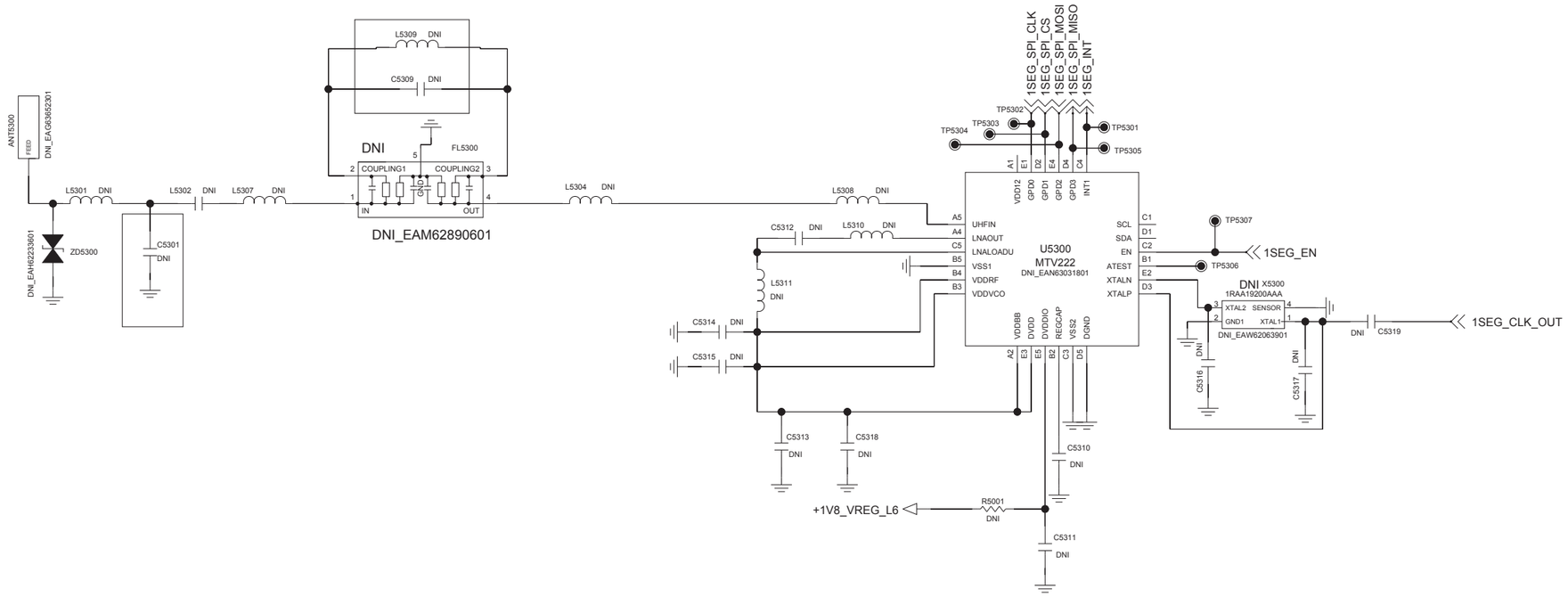

< 6-6-1_Earjack > Rev_0.4

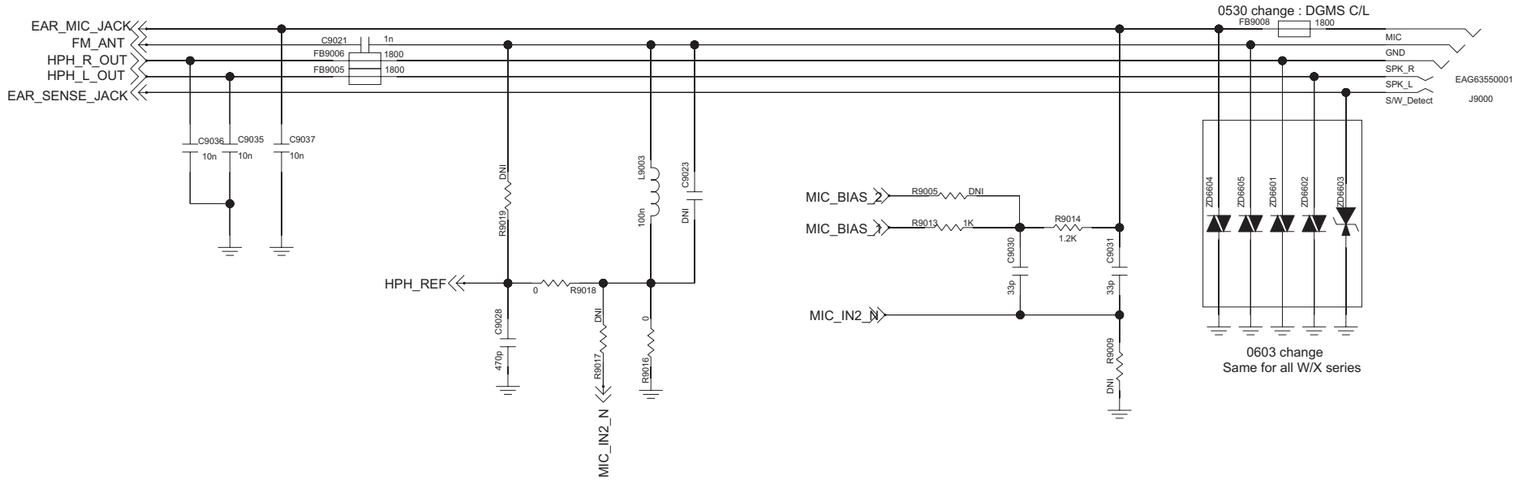

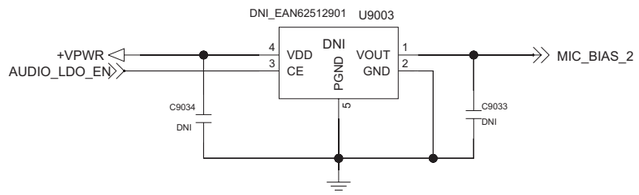

< 6-9-2_2MIC > Rev_0.4

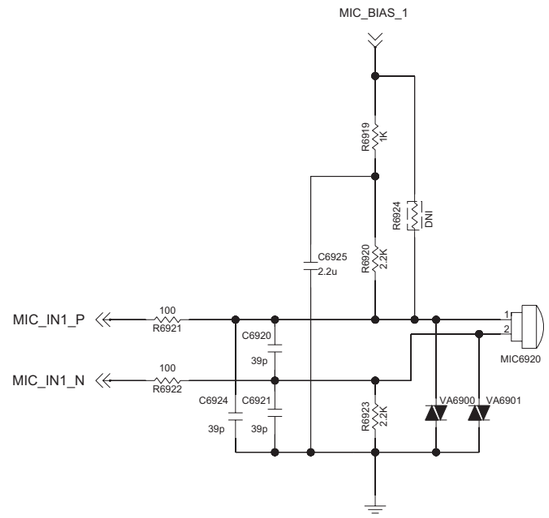

< 6-8-2_Receiver_TCOIL > Rev_0.4

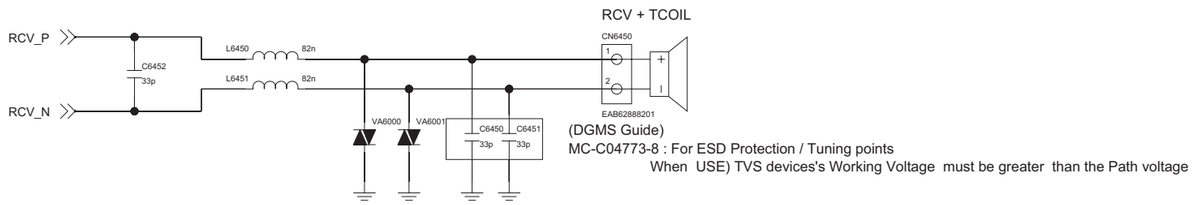

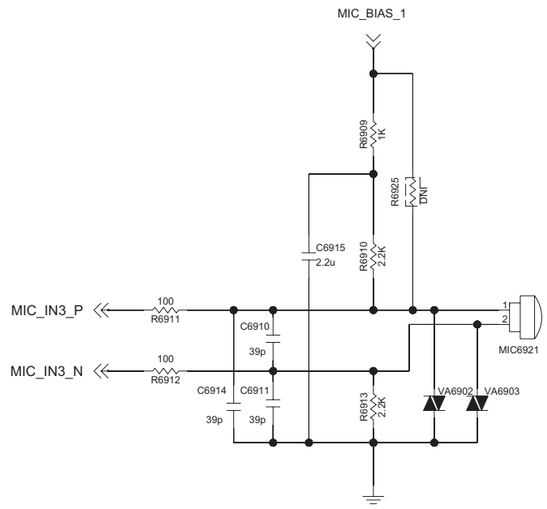

< 7-1-5-3 LCD_5_0inch WVGA_W6 > Rev_0.3

ENBY0034201

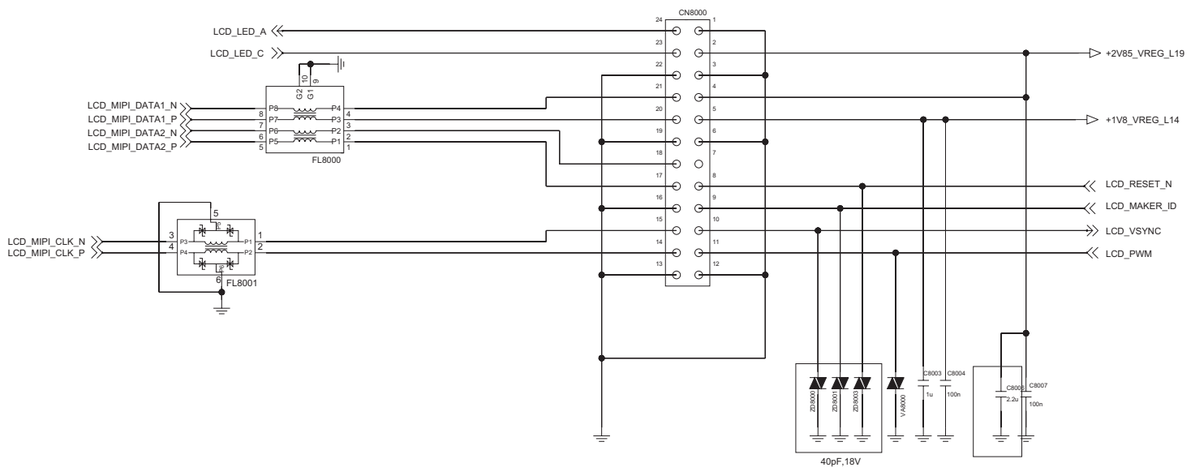

Pin Map & Conn. Change : 0614

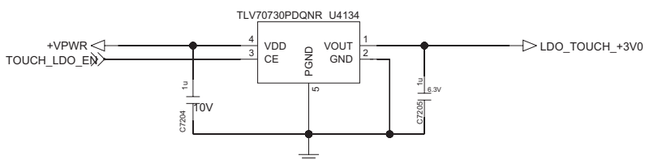

TOUCH COB

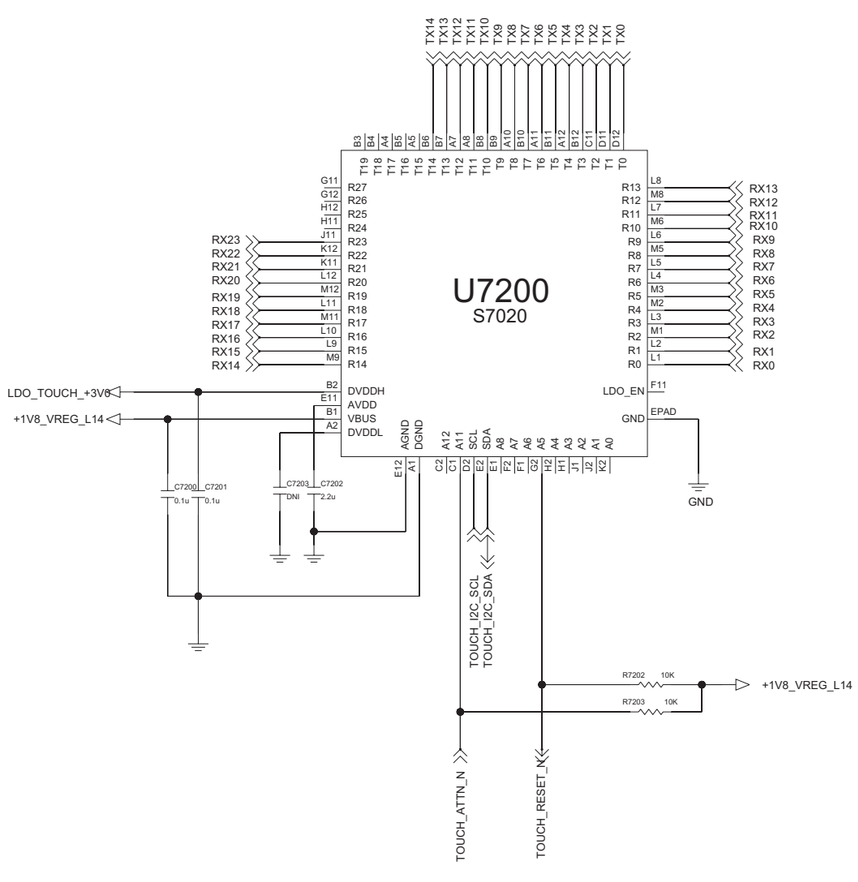

< 7-2-1-1_Touch_Connector >

Touch Connector

(B to B type)

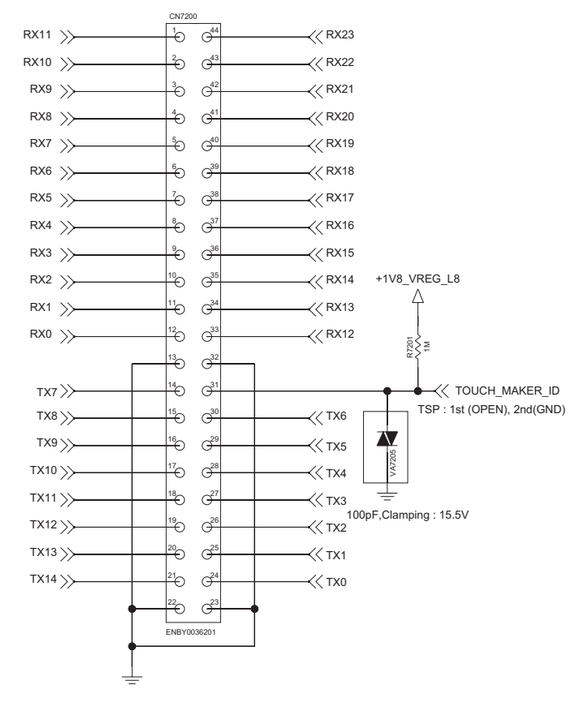

< 7-3-2_Main_Camera_24pin_5M_8M > Rev_0.3

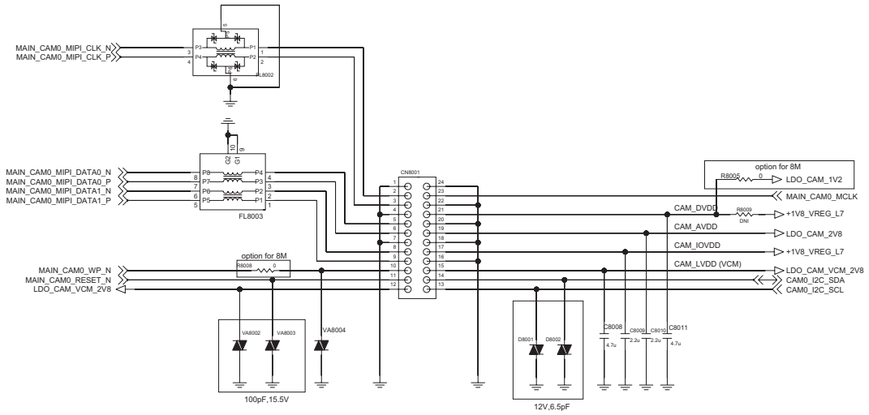

5M Camera P/N : EBP61721801

8M Camera P/N : EBP61601902

< 7-4-1_VT_Camera_20pin_VGA_1.26M_1.3M_2.4M> Rev_0.4

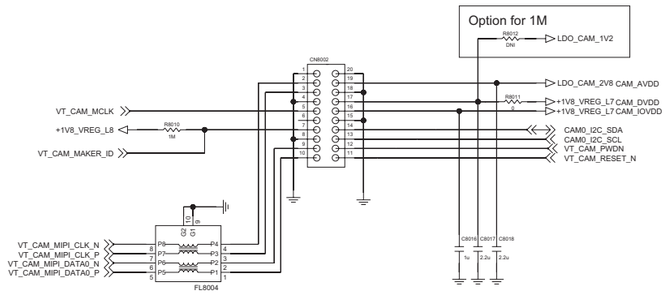

NEW VGA Camera P/N : EBP61941701

0607 : LDO for VCM

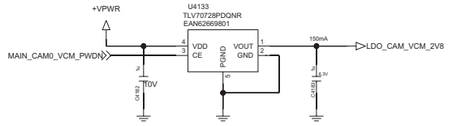

Camera LDO

option for 8M

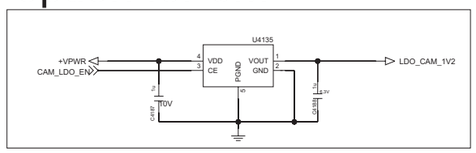

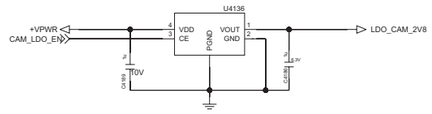

<8-1-2-1_Accel_Compass_BMC150> REV.0.4

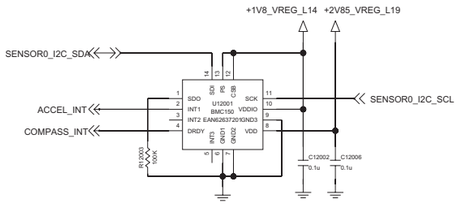

Need to Change 6-axis

<8-4-1-1_Proximity_APDS-9130> REV.0.4

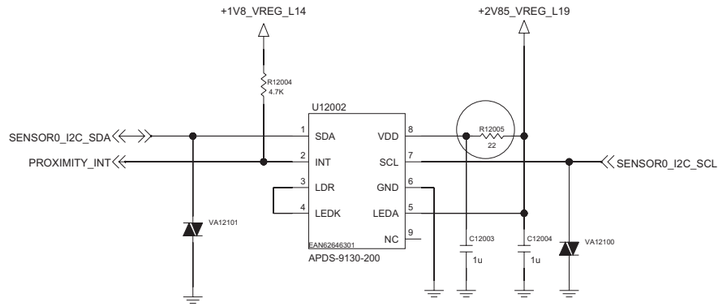

<9-1-2_Battery_CNT_4P> REV.0.6

<8-7-1-1_Hall IC_BU52061NVX> Rev_0.3

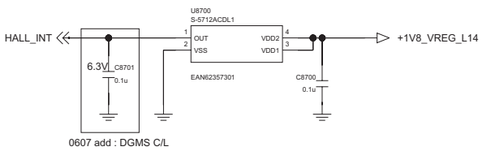

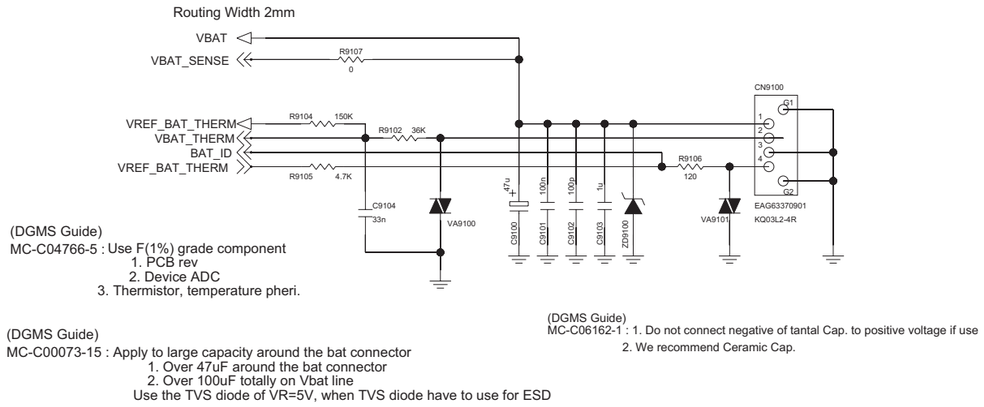

EMBY0053201
same as all W/X series

< 9-3-1_JTAG > Rev_0.4

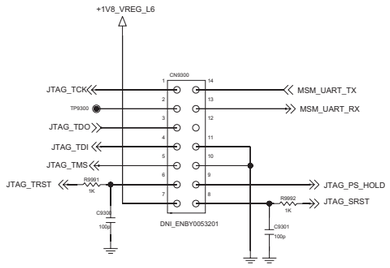

<9-5-1-1_Single_SIM_6P> REV.0.3

<9-5-1-2_Dual_SIM_Socket_12P> REV.0.3

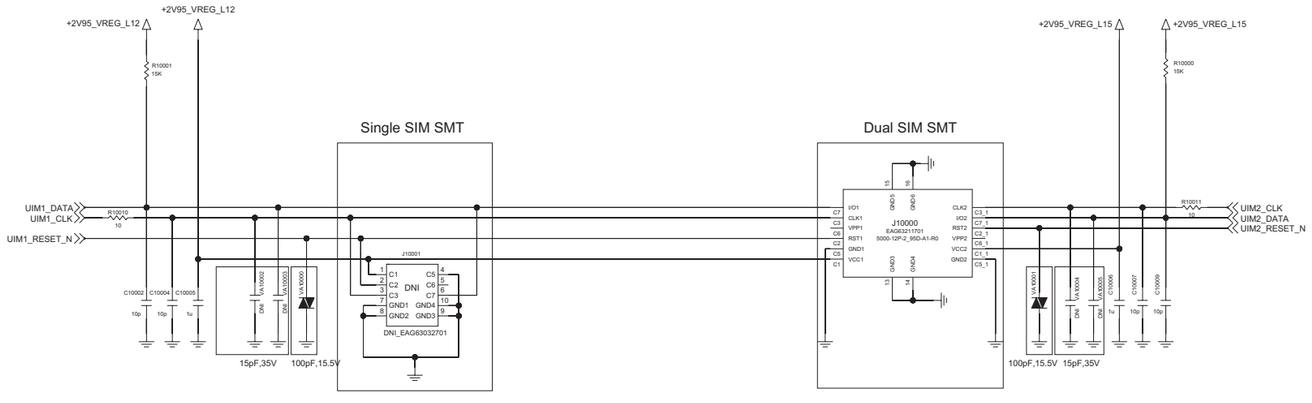

Need to Change Varistor DNI for BOM

<9-6-1-1_Socket_Micro_SD> Rev_0.3

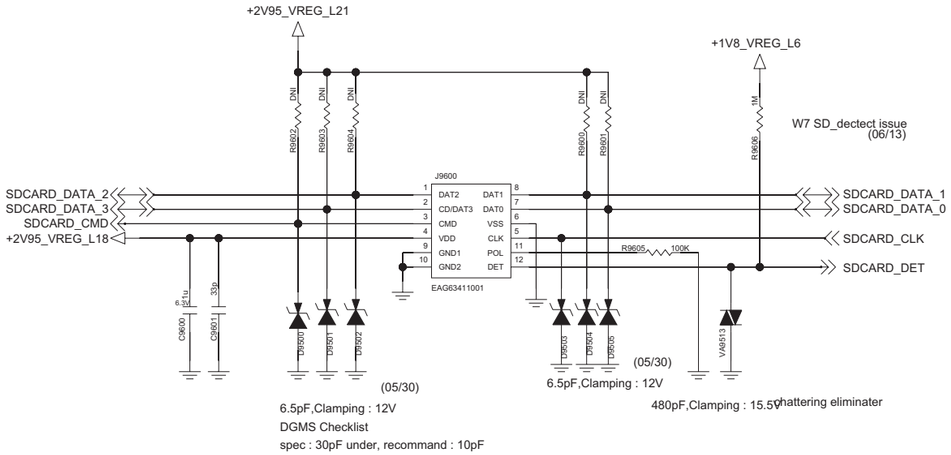

Card Detect	SW1 SW2	SD_CARD_DET
Card Installed		1.8V
Card Not Installed		GND

< 9-7-1_Power_Lock_Volume_Key > Rev_0.3

POWER & LOCK KEY

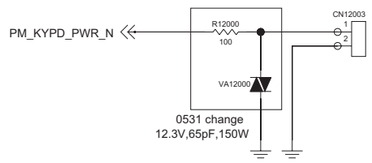

POWER key module

Vol. UP/DOWN

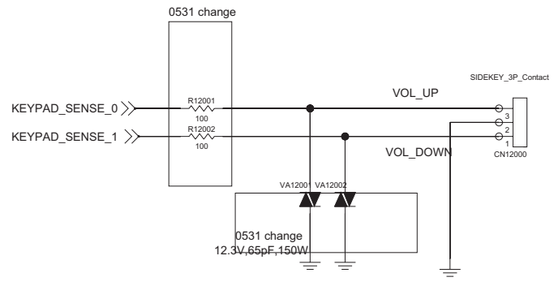

SideKey Module

< 9-9-1-1_Motor > Rev_0.3

Side Contact, Coin, No Haptic

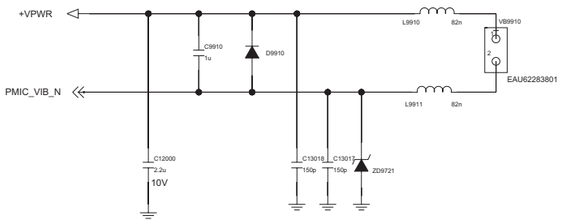

Lower connector @ W5

< 6-7-1_Speaker > Rev_0.4

Top side C-clip contact

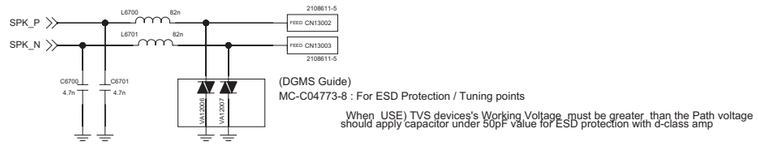

< 9-2-1_IO_USB2.0 > Rev_0.5

L9II

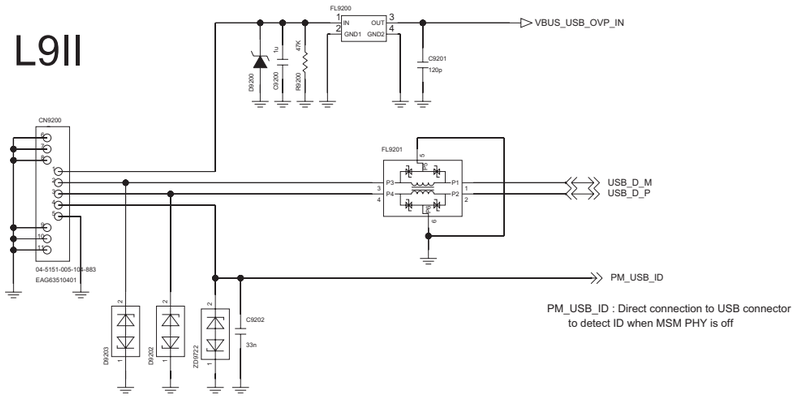

PM_USB_ID : Direct connection to USB connector
to detect ID when MSM PHY is off

Homekey Module Connector

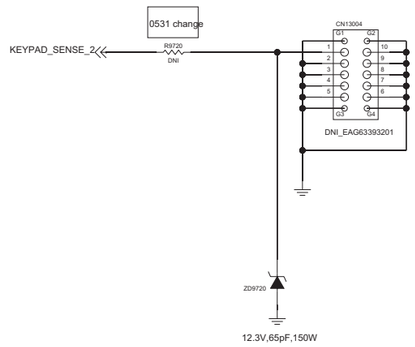

7. BGA PIN MAP

U2100 (MSM8210)

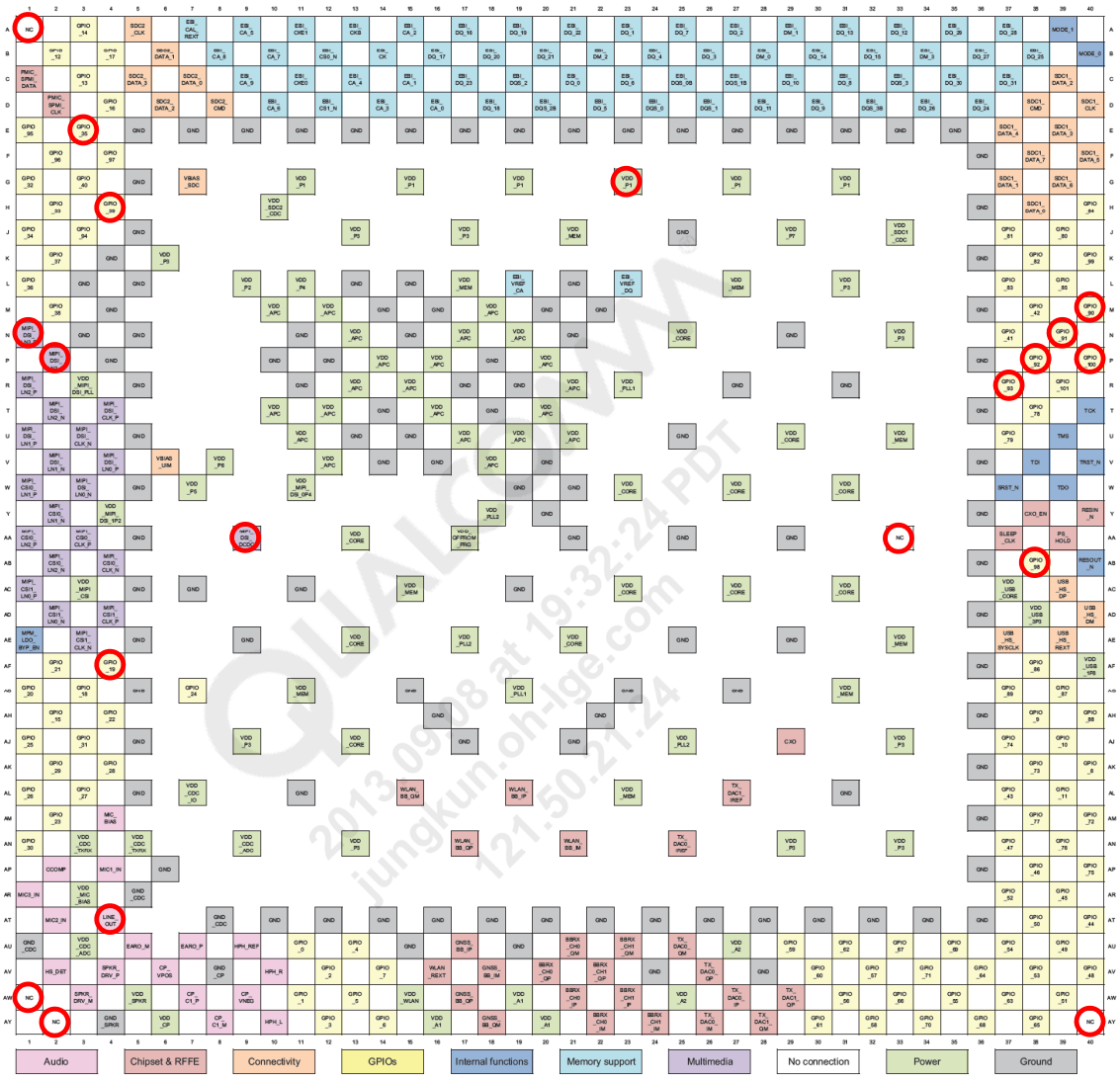

Not Used

U4100 (PM8110)

	1 VDD _L6_7 8 9 14		2 XTAL_ 19M_IN		3 VREG _RFCLK		4 VREG _L10		5 VREG _L18		6 VREG _L3		7 VREG _L21		8 VDD _L16_19 20 21
9 VDD _L6_7 8 9 14		10 VREG _L7		11 XTAL_ 19M_OUT		12 VDD _L10_11 13		13 VDD _L12_15_ 17 18 22		14 VREG _L4		15 VDD _L1_2_ 3 4 5		16 VREG _L19	
	17 VDD _L6_7 8 9 14		18 VREG _L8		19 VREG _XO		20 BB_ CLK		21 VREG _L22		22 VDD _L1_2_ 3 4 5		23 VREG _L20		24 VDD _L16_19 20 21
25 VREG _L14		26 REF _BYP		27 VREG _L15		28 RF_ CLK2		29 VREG _L17		30 VREG _L5		31 VREG _L1		32 VREG _L16	
	33 VREG _L9		34 GND _REF				35 VREG _L12				36 VREG _L2		37 VSW _S1		38 VDD _S1
39 GND _S4		40 VREG _L6		41 RF_ CLK1						42 GND _XO		43 VREG _S1		44 VSW _S1	
	45 VSW _S4		46 BB_ CLK_EN		47 XO_ THERM				48 GND _RF		49 AVDD _BYP		50 GND _S1		51 GND _S1
52 VDD _S4		53 VREG _S4		54 SLEEP _CLK				55 GND		56 GND		57 RESIN _N		58 VIB_ DRV_N	
	59 VCOIN		60 MPP _04		61 GND		62 GND_ XOADC		63 GND				64 GND _DRV		65 VDD _S2
66 VDD _S3		67 VSW _S3		68 MPP _03				69 GND		70 GND		71 SPMI _DATA		72 VSW _S2	
	73 VSW _S3		74 VREG _S3						75 GND		76 SPMI _CLK		77 VSW _S2		78 GND _S2
79 GND _S3		80 VBAT _SNS		81 GPIO _02		82 MPP _01		83 VREG _IADC		84 PS_ HOLD		85 VREG _S2		86 GND _S2	
	87 VBAT		88 GPIO _04		89 GPIO _03		90 GPIO _01		91 MPP _02		92 PON_ RST_N		93 VREF _LPDDR		94 VREF_ NEG_S2
95 VBAT		96 VBAT		97 BAT_ THERM		98 USB _IN		99 VSW _CHG		100 HW_ID		101 KPD_ PWR_N		102 ATC_ SINK	
	103 VPH _PWR		104 VPH _PWR		105 BAT _ID		106 VCHG		107 GND_ CHG_HP		108 VREF_ BAT_THM		109 GND _CHG		110 GND
111 BATFET _CP_DRV		112 VPH _PWR		113 VPRE _BYP		114 USB _IN		115 VSW _CHG		116 GND_ CHG_HP		117 VDRV_P		118 NC	

INPUT PWR MGT | OUTPUT PWR MGT | GEN HK | USER I/F | IC I/F | GPIO or MPP | Power | Ground

Not Used

U3300 (Memory)

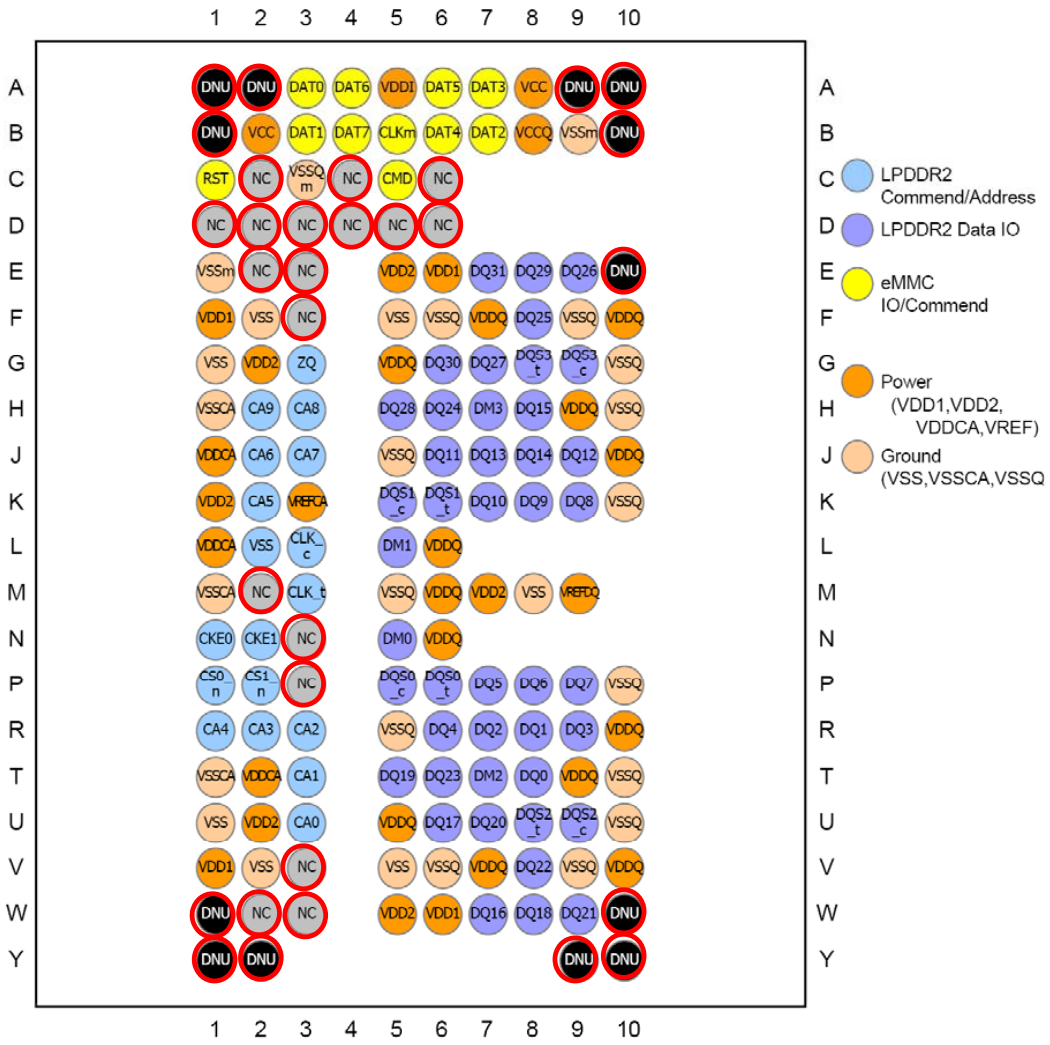

Not Used

U7200 (S7020)

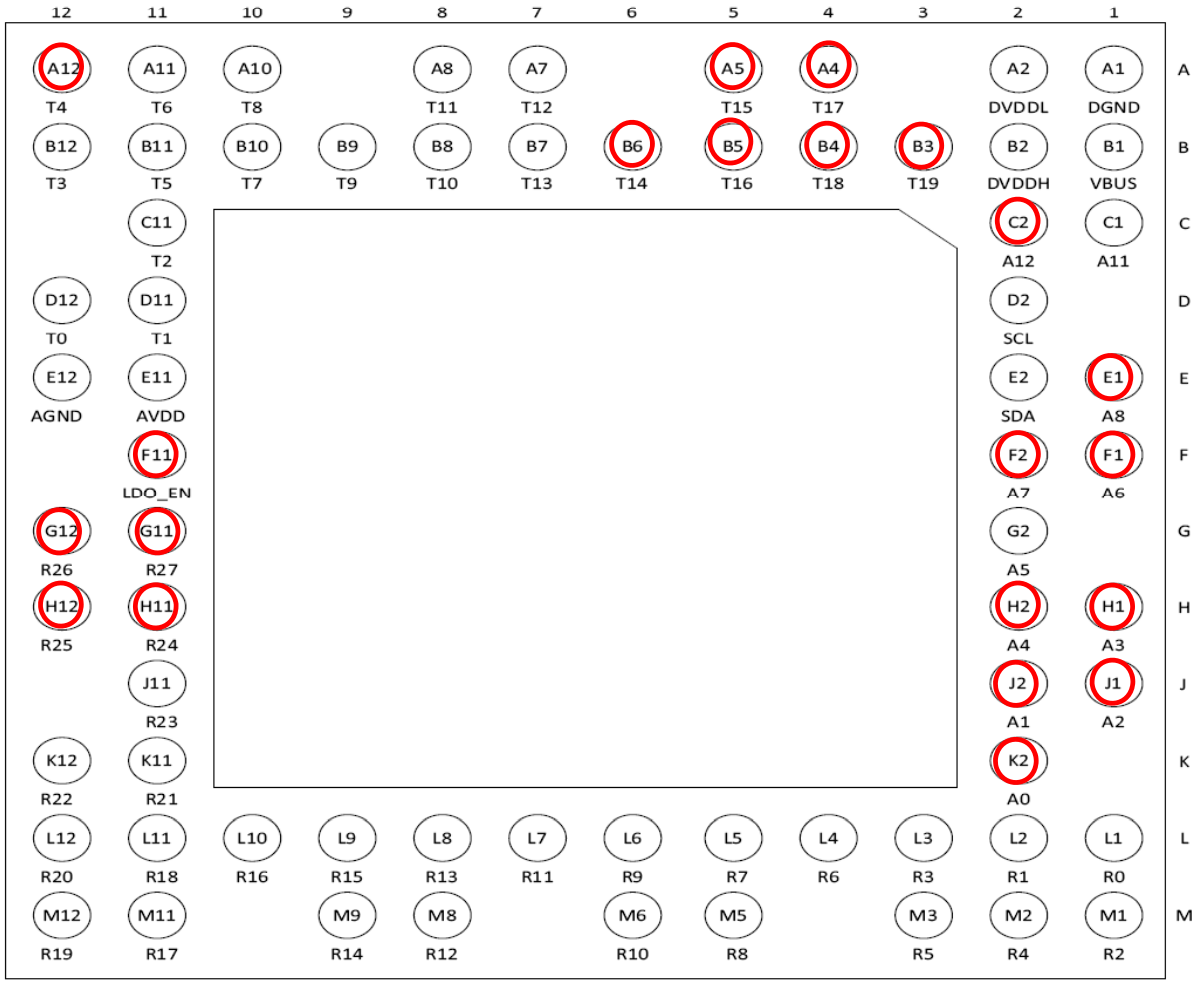

Not Used

U5100 (WCN3620)

	1 GND		2 GND		3 VDD_BT _RF_1P3		4 VDD_BT _DA_3P3		5 WL_BT _RFIO		6 WL_CMD _SET
7 VDD_BT_ VCO_1P3		8 GND				9 VDD_WL_ 2GLNA_1P3		10 GND		11 VDD_WL_ 2GPA_3P3	
	12 GND		13 VDD_BT_ BB_1P3		14 GND						15 NC
16 VDD_BT_ PLL_1P3		17 GND		18 BT_CTL		19 GND		20 GND		21 GND	
	22 VDD_IO _1P8		23 VDD_BT_ FM_DIG_1P3		24 VDD_XO _1P8		25 GND		26 WL_CMD _DATA1		27 GND
28 BT_DATA		29 VDD_ DIG_1P2		30 TCXO_IN				31 NC		32 GND	
	33 BT_SSBI		34 GND		35 GND		36 VDD_WL LO_1P3				37 VDD_WL_ 2GPA_1P3
38 NC		39 GND		40 NC		41 FM_SSBI		42 GND		43 VDD_WL_ UPC_1P3	
	44 GND		45 GND		46 FM_DATA		47 WL_BB _QN		48 WL_CMD _DATA0		49 WL_PDET _IN
50 FM_HS _RX		51 VDD_FM_ VCO_1P3		52 VDD_FM_ PLL_1P3		53 WL_BB _QP		54 WL_BB _IP		55 WL_CMD _DATA2	
	56 VDD_FM_ RXFE_1P3		57 VDD_FM_ RXBB_1P3		58 VDD_WL_ PLL_1P3		59 WL_BB _IN		60 VDD_WL _BB_1P3		61 WL_CMD _CLK

WLAN | FM | BT | Shared functions | Top level | Power | Ground | No Connect

Not Used

U1500 (WTR2605)

	1 TX2 _OUT		2 TX_ BB_IP		3 RX_ MB3_IN		4 RX_ MB1_IN		5 RX_ LB1_IN	
6 TX3 _OUT		7 TX1 _OUT		8 SSBI _RX		9 RX_ MB2_IN		10 RX_ LB2_IN		11 GNSS_ RF_IN
			12 TX_ BB_IM		13 RF_ON		14 GND		15 GND	
16 VDD_RF2 _T_DA		17 GND		18 TX_ BB_QP		19 VDD_RF2 _R_BB		20 VDD_RF1 _LNA		21 VDD_RF1 _G_PLL
	22 PDET _RFFB_IN		23 TX_ BB_QM		24 DAC _REF				25 GND	
26 VDD_RF1 _T_LO		27 GND		28 GND		29 GND		30 VDD_RF1 _R_LO		31 VDD_RF1 _G_LO
	32 GND		33 GND		34 GND				35 GND	
36 DNC		37 VDD_RF2 _T_VCO		38 GND		39 VDD_RF1 _R_VCO		40 VDD_RF2 _R_PLL		41 GNSS_ BB_QM
			42 GND		43 RX_ BB_QM		44 GND		45 GNSS_ BB_QP	
46 VDD_RF1 _T_PLL		47 GND		48 VDD_RF1 _DIG		49 RX_ BB_QP		50 GND		51 GNSS_ BB_IM
	52 VDD_RF2 _T_PLL		53 GP_ DATA0		54 VDD_RF2 _XO		55 RX_ BB_IM		56 SSBI_ TX_GNSS	
57 GND		58 GP_ DATA1		59 VDD_RF3 _IO		60 XO_IN		61 RX_ BB_IP		62 GNSS_ BB_IP

Rx RF | Rx BB | Tx RF | Tx BB | Support | DNC | Power | Ground

Not Used

U8001 (RT8542)

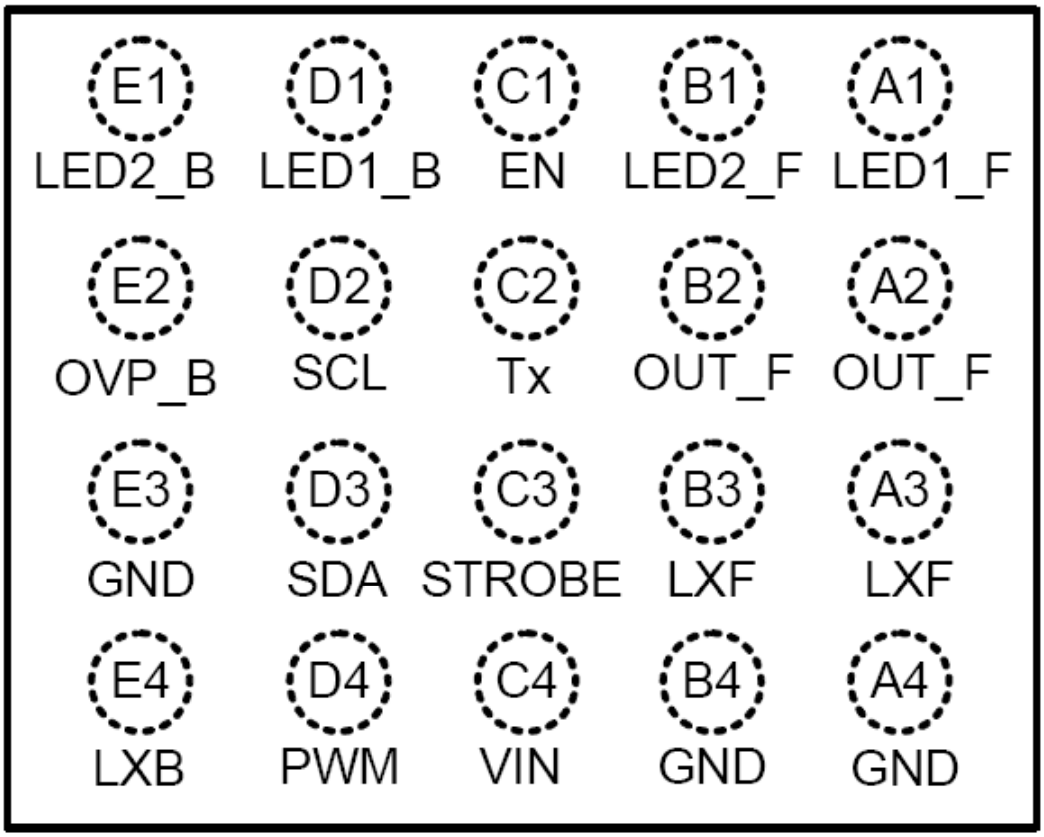

ALL USED PIN

8. PCB LAYOUT

MIC6921 : Microphone
- no Mic

U7200 : Touch IC
- no Touch
- no Knock-On

U8001 : LCD Backlight IC
- no Display
- no Flash

U12002 : Proximity Sensor
- no Proximity Sensor

U4100 : PMIC
- no Power On
- no Charging, Reset

U3300 : Memory
- no Power On
- no Download, Reset

U2100 : MainChip
- no Power On
- no Download, Reset
- no Display
- no Camera
- no Audio

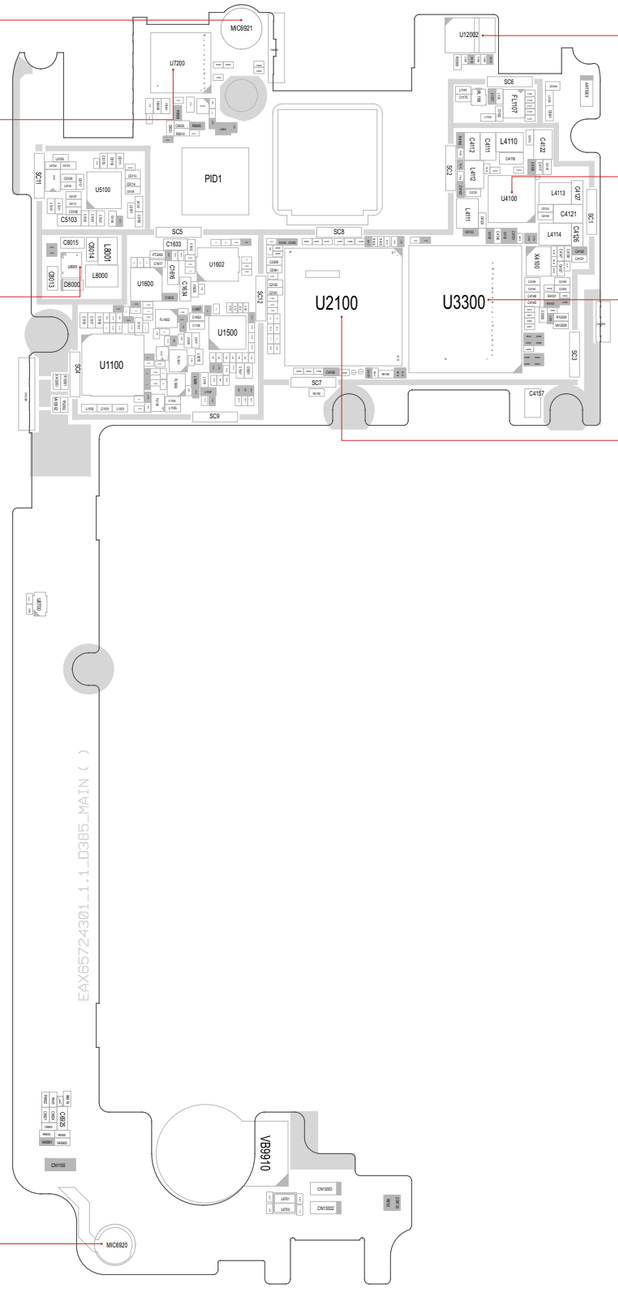

MIC6920 : Microphone
- no Mic

LG-D373EU_MAIN_EAX65724301_1.0_TOP

CN8200 : Front Camera Connector
- no Front Camera

U5300 : Broadcasting IC
- no DTV

J9600 : Micro SD Card Connector
- no MicroSD card

U12001 : Accel_Compass Sensor
- no Accel
- no Compass

CN9100 : Battery Connector
- no Charging
- no Power on

CN7200 : Touch Connector
- no Touch

CN8000 : LCD Connector
- no Display

J10000 : SIM Connector
- no SIM

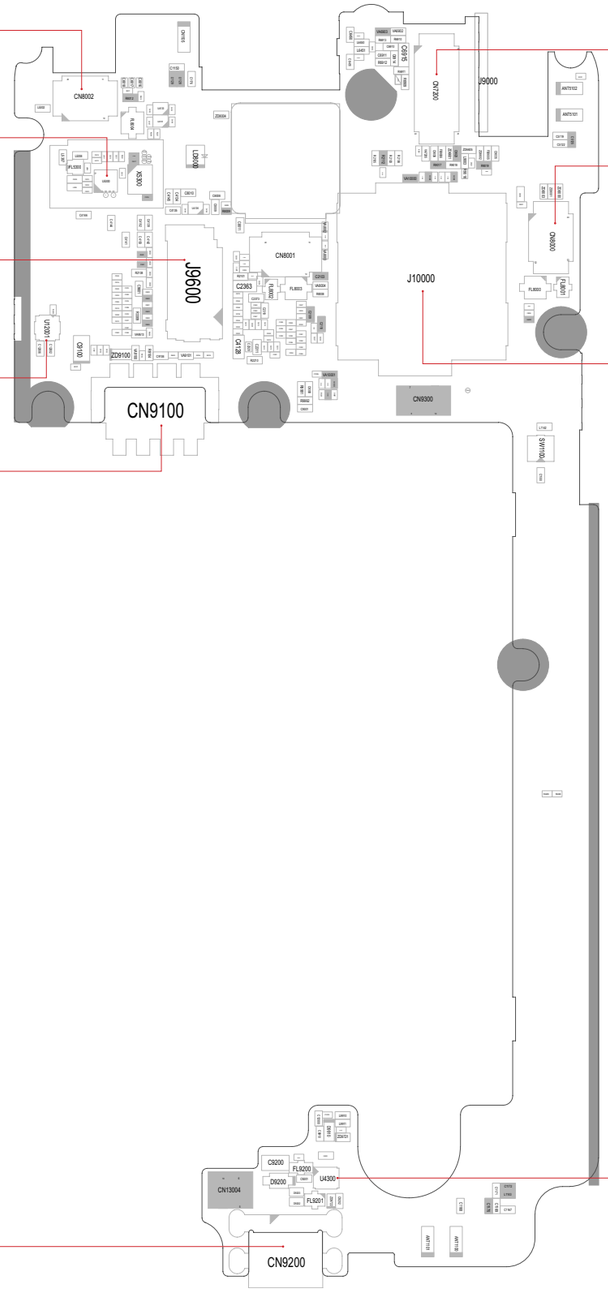

CN9200 : IO Connector
- no Charging
- no Data Connection
- no Download

U4300 : OVP IC
- no Charging

LG-D373EU_MAIN_EAX65724301_1.0_BOT

9. CALIBRATION

This document is draft version, so the contents will be updated after registering the final one.		
CAL INFORMATION		
S/W VERSION		
Please Check the Version to "B2B"		
H/W		
	Name	**Part No.**
PIF	PIF200(All Type)	BJAY0024021
USB Cable	USB Cable	RAD32247898
Power Cable	DC Power Cable	RAD32247878
I/O Cable		
RF Cable_Main		
Power Supply_PIF	Power Supply 5.3V	
Power Supply_Phone	Power Supply 5.0V	
RF Test Equipment	E5515C(8960)	
NOTICE		

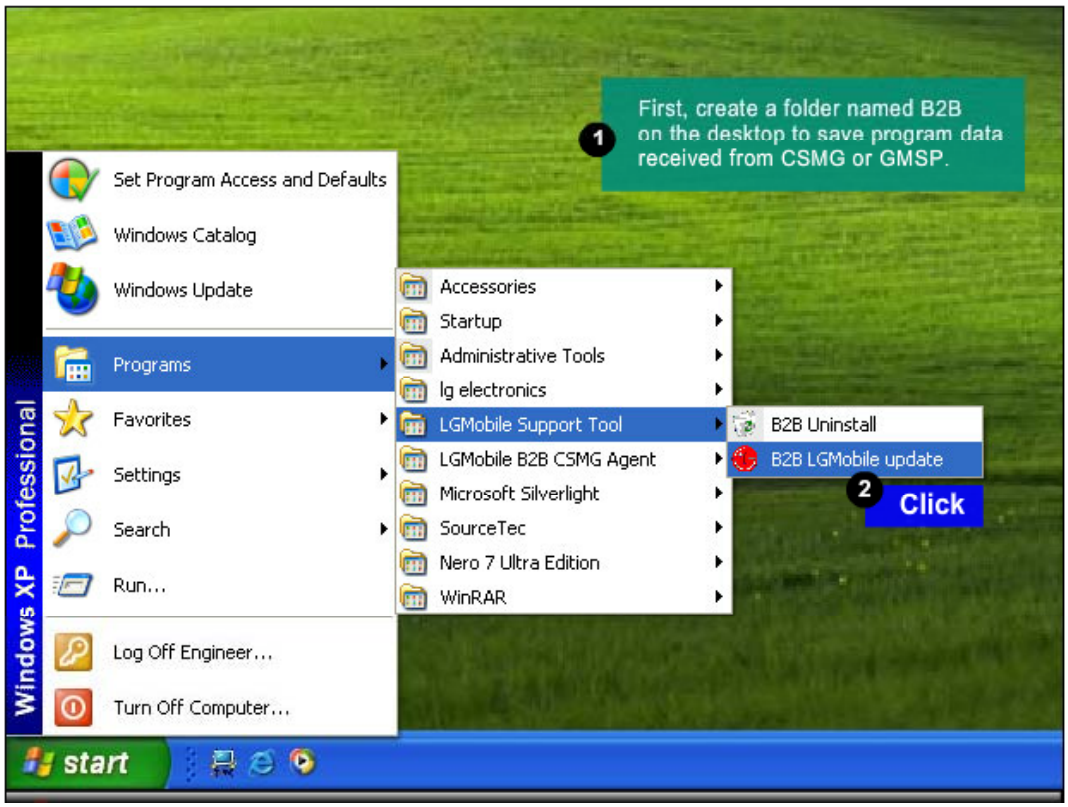

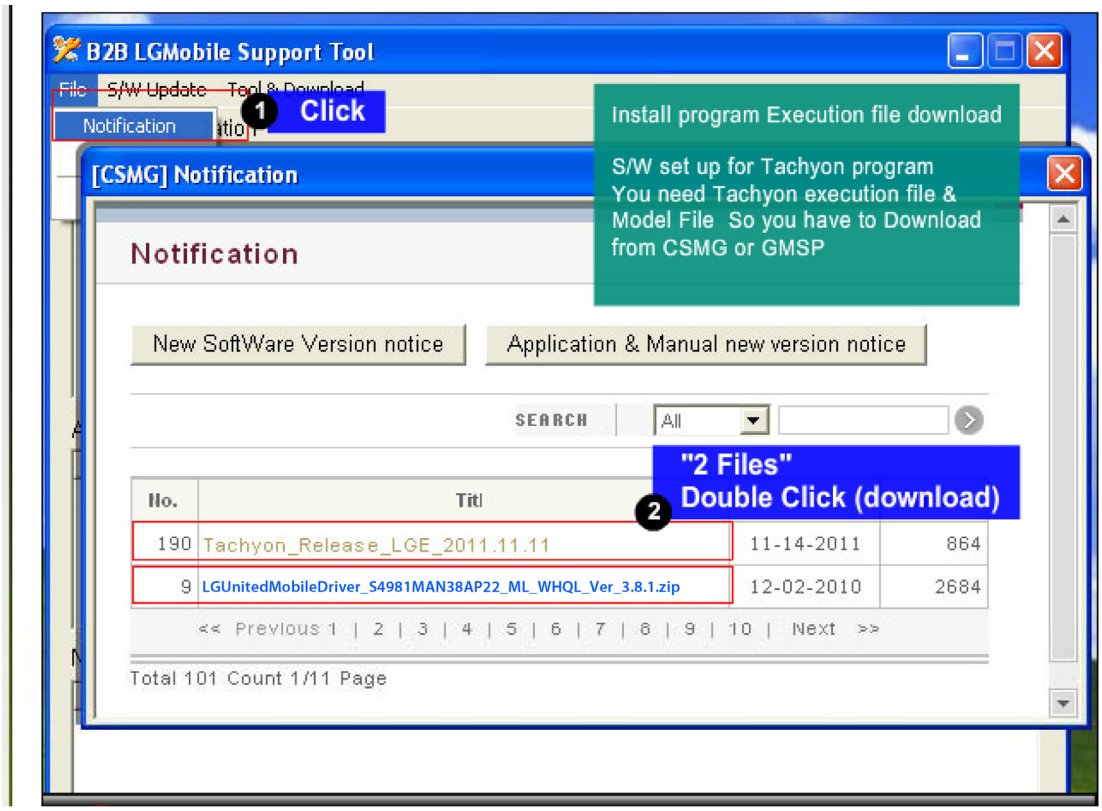

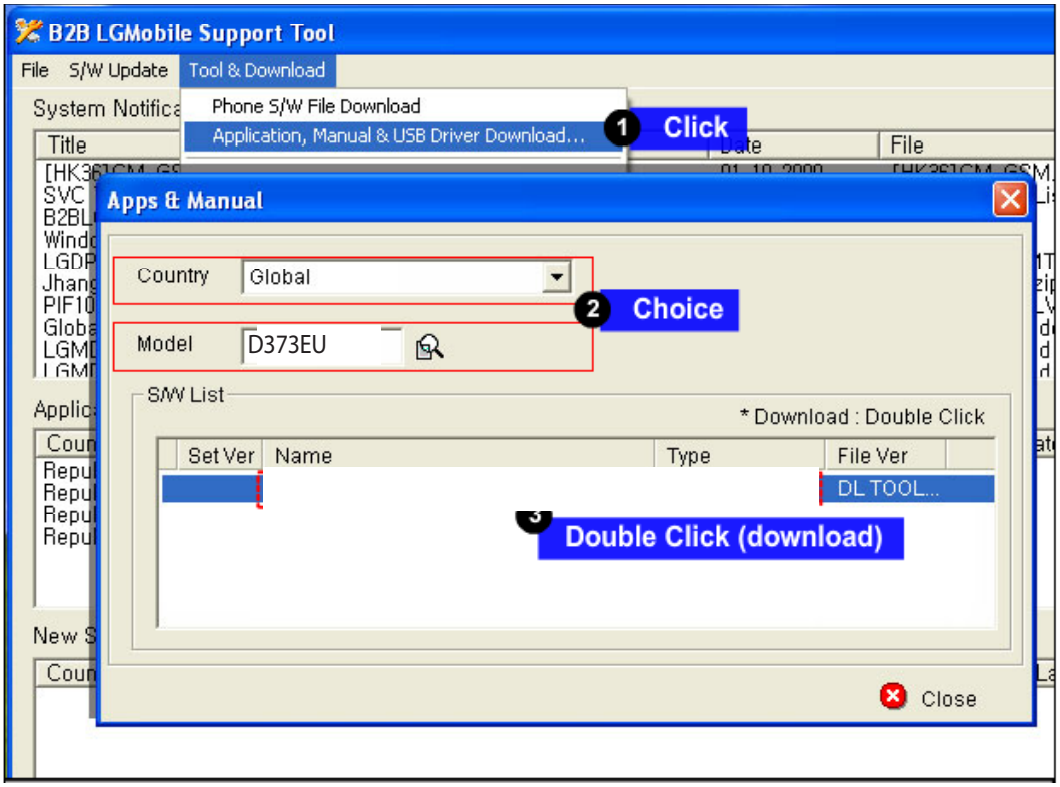

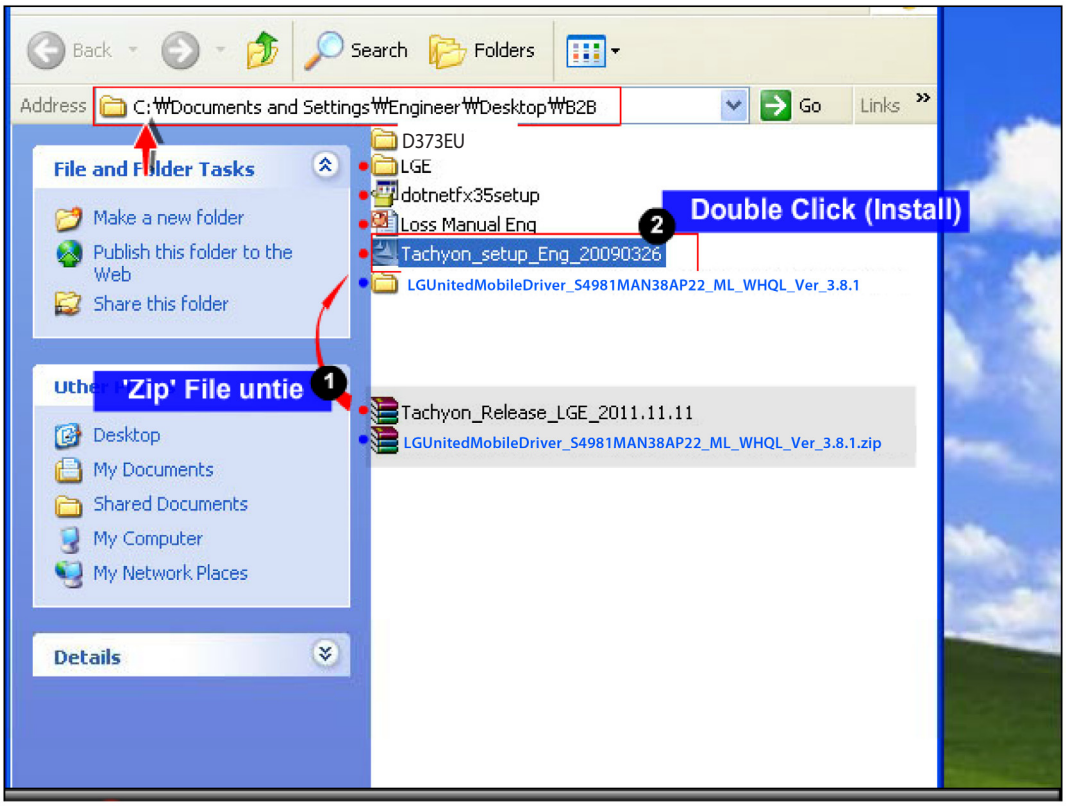

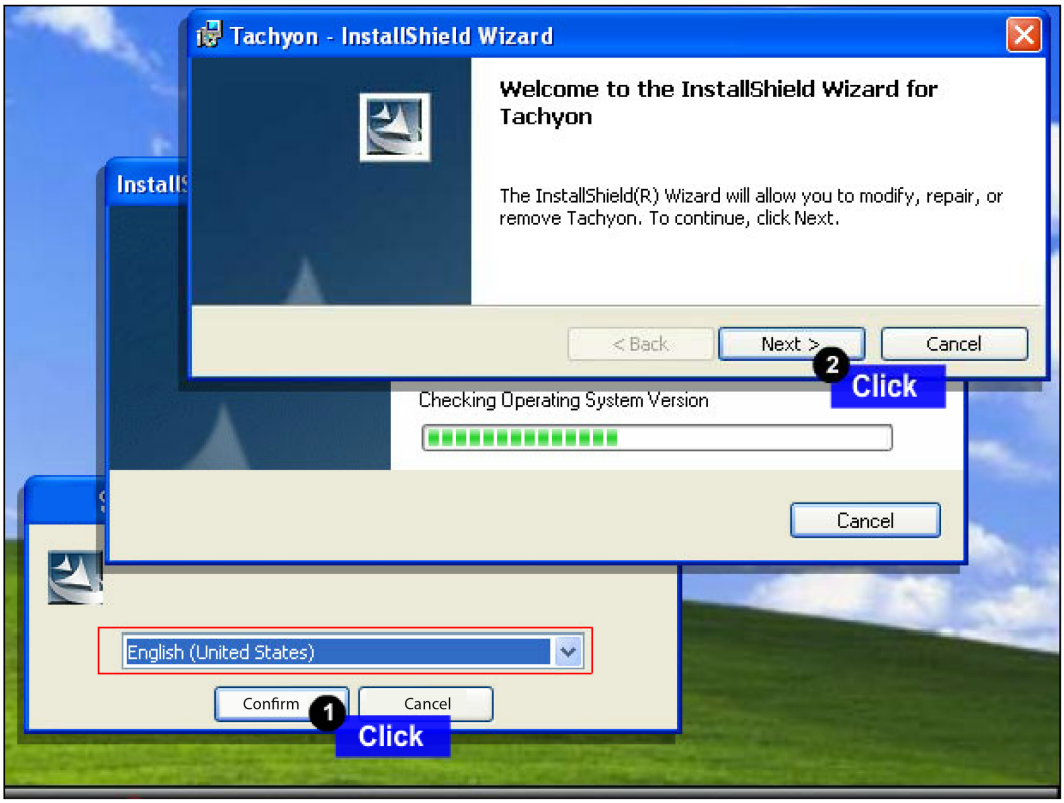

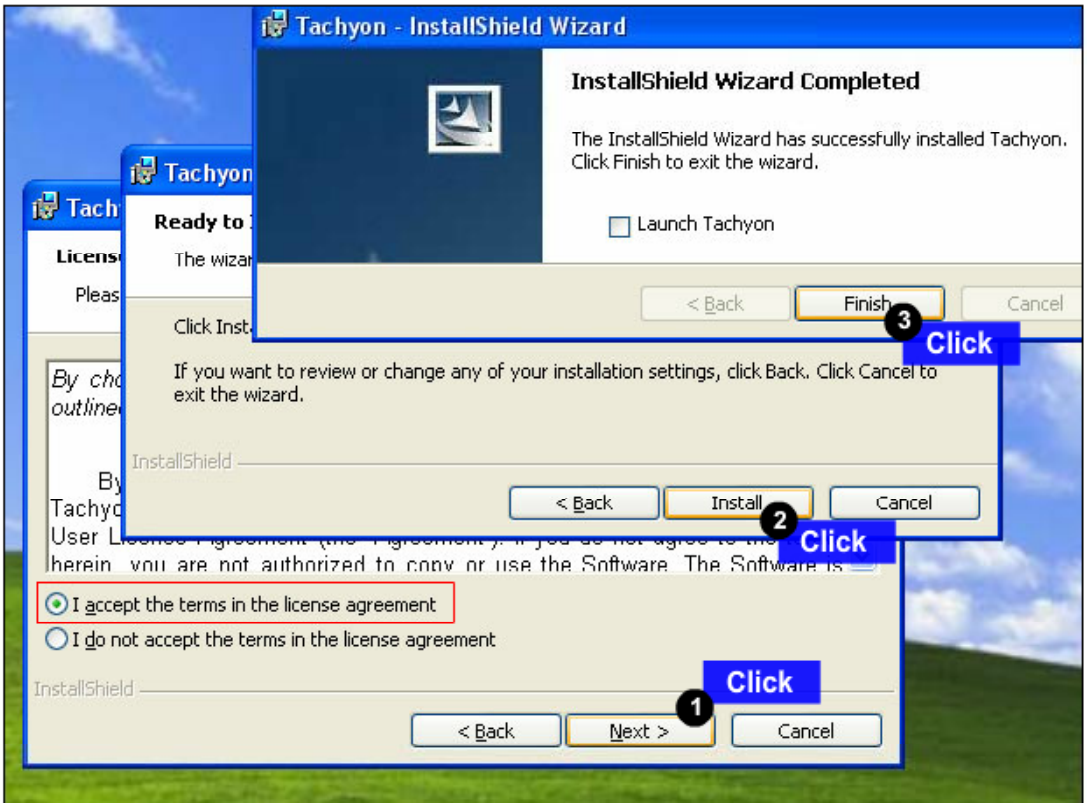

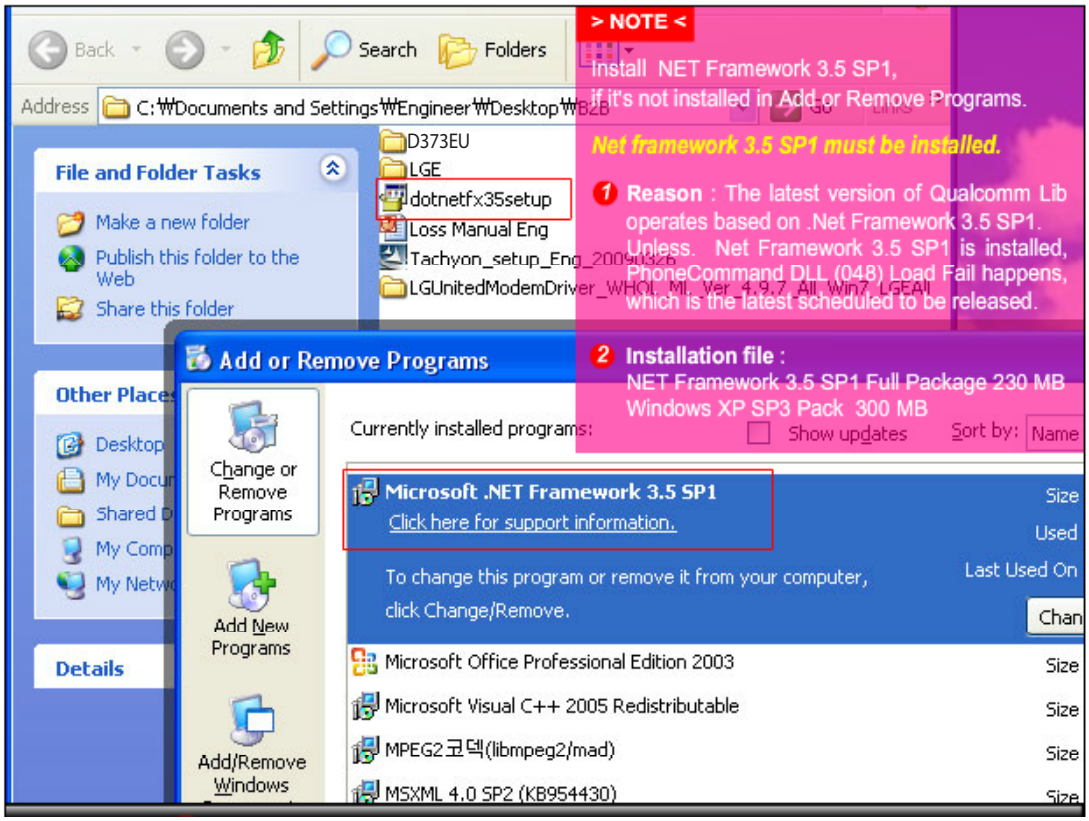

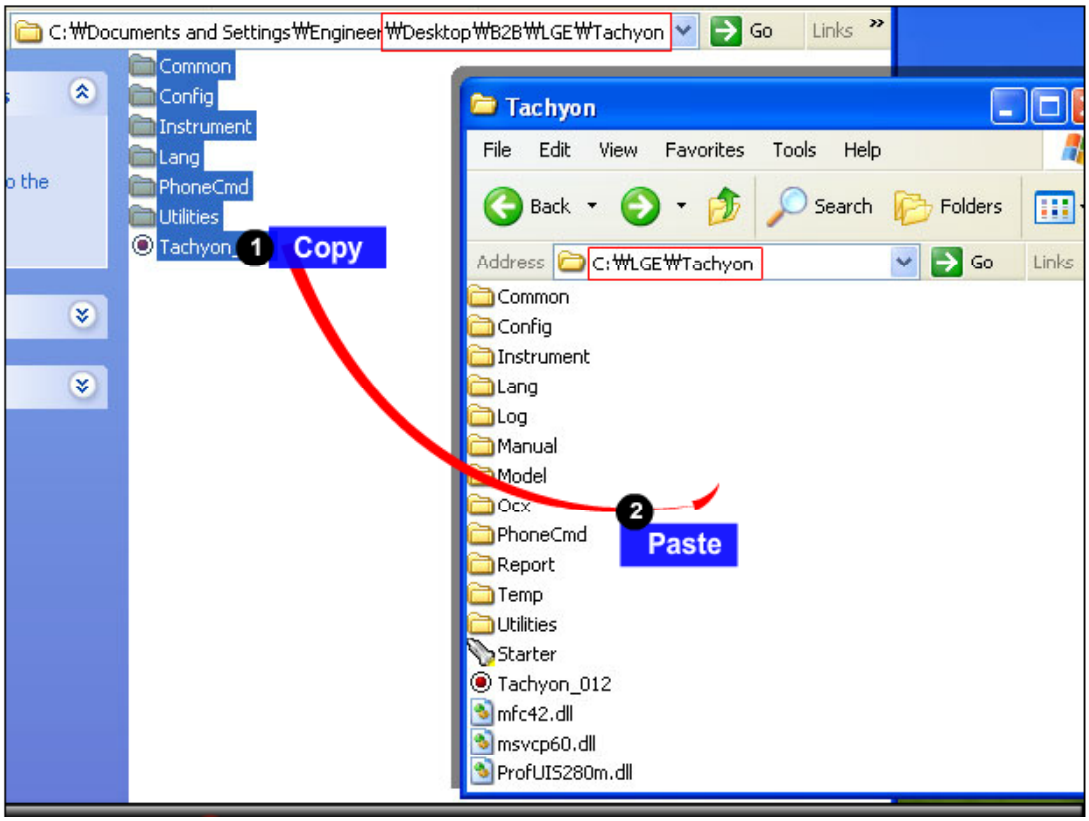

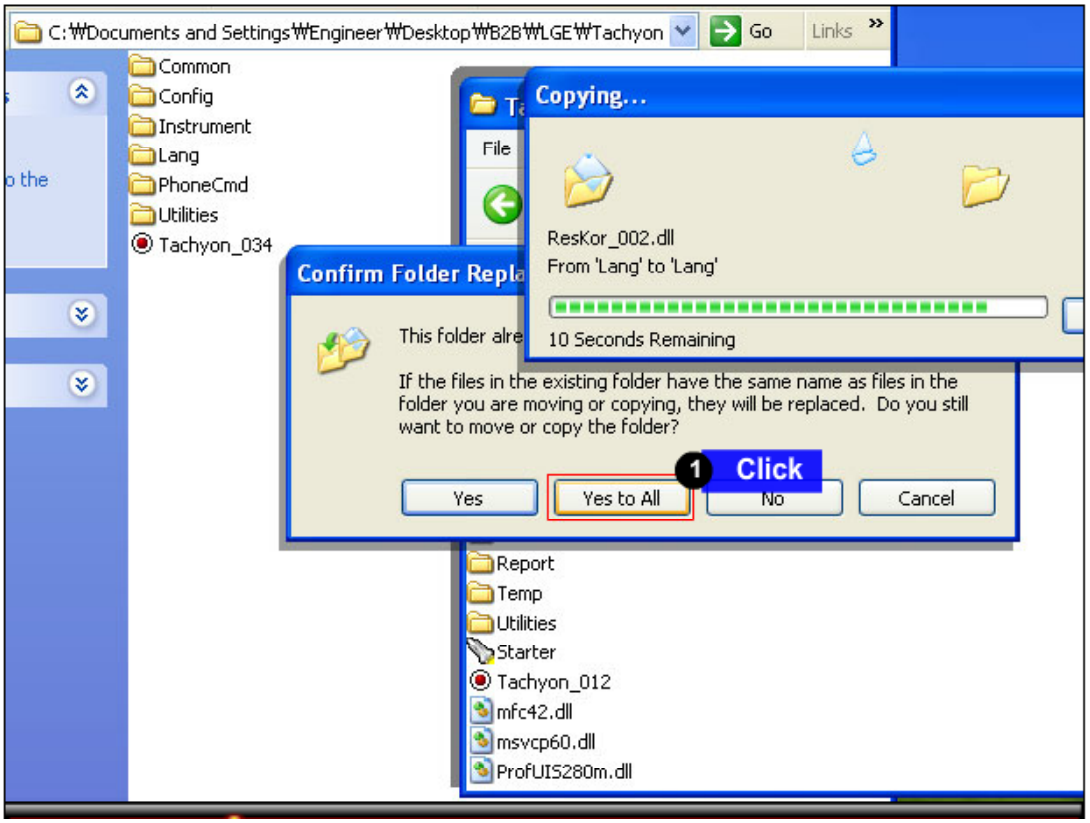

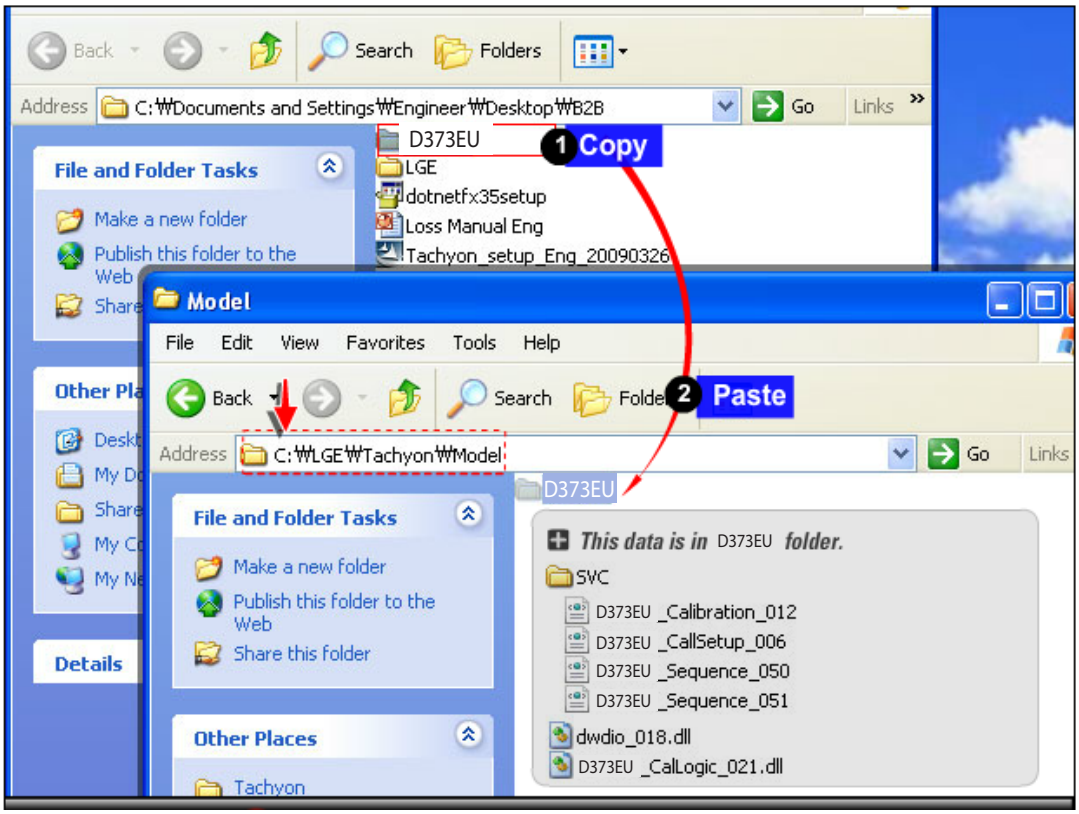

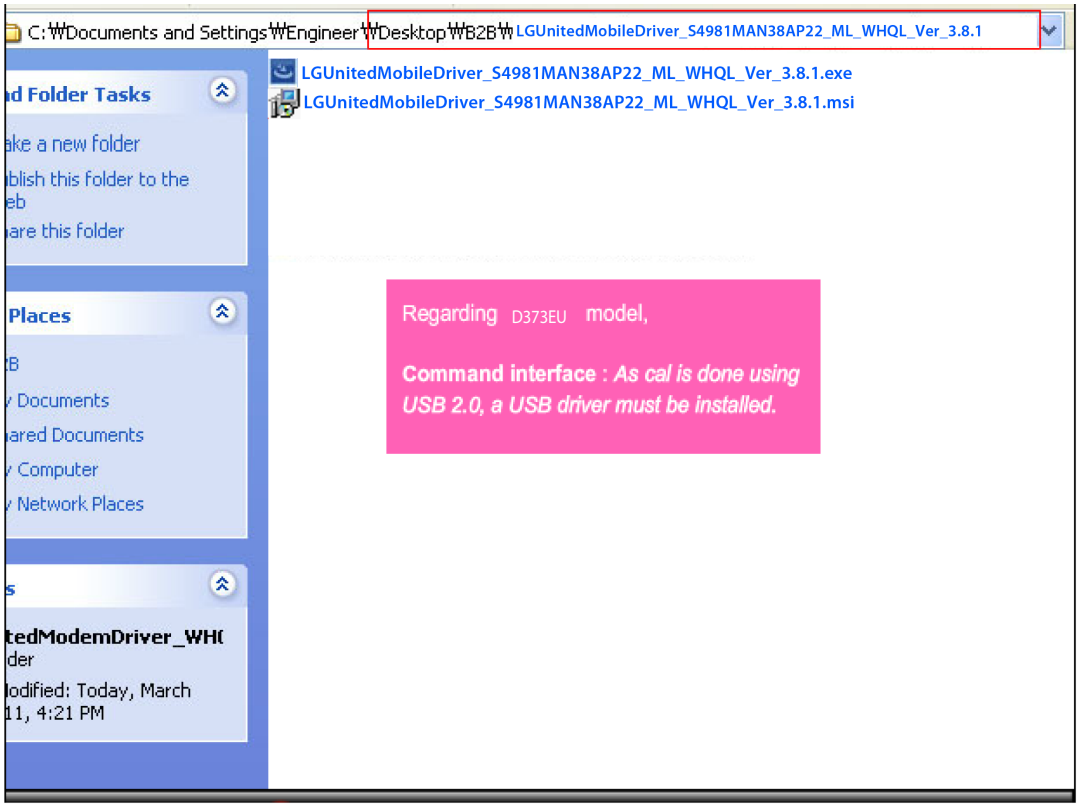

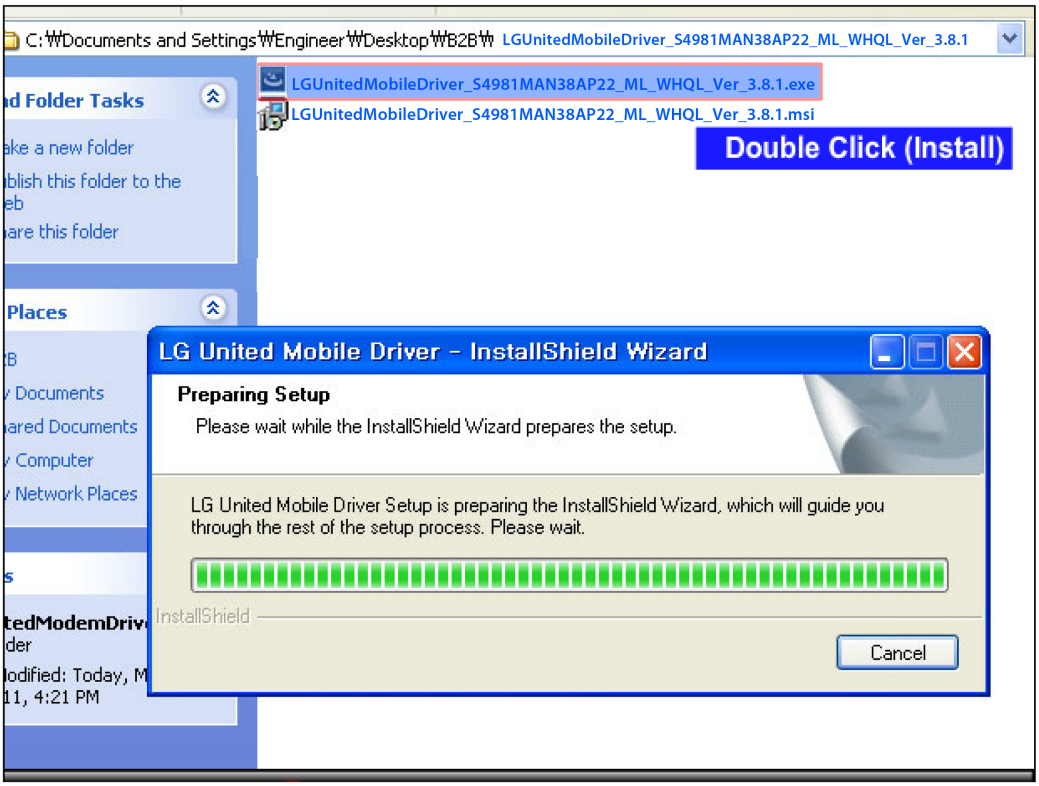

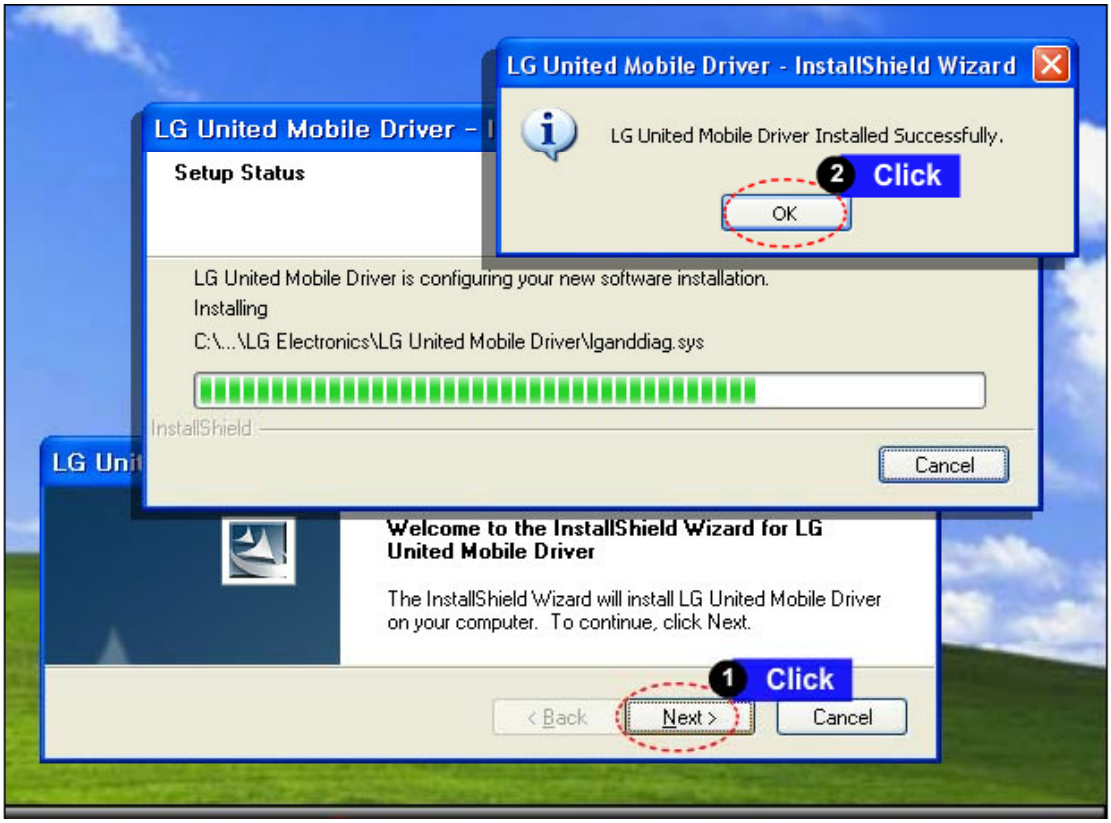

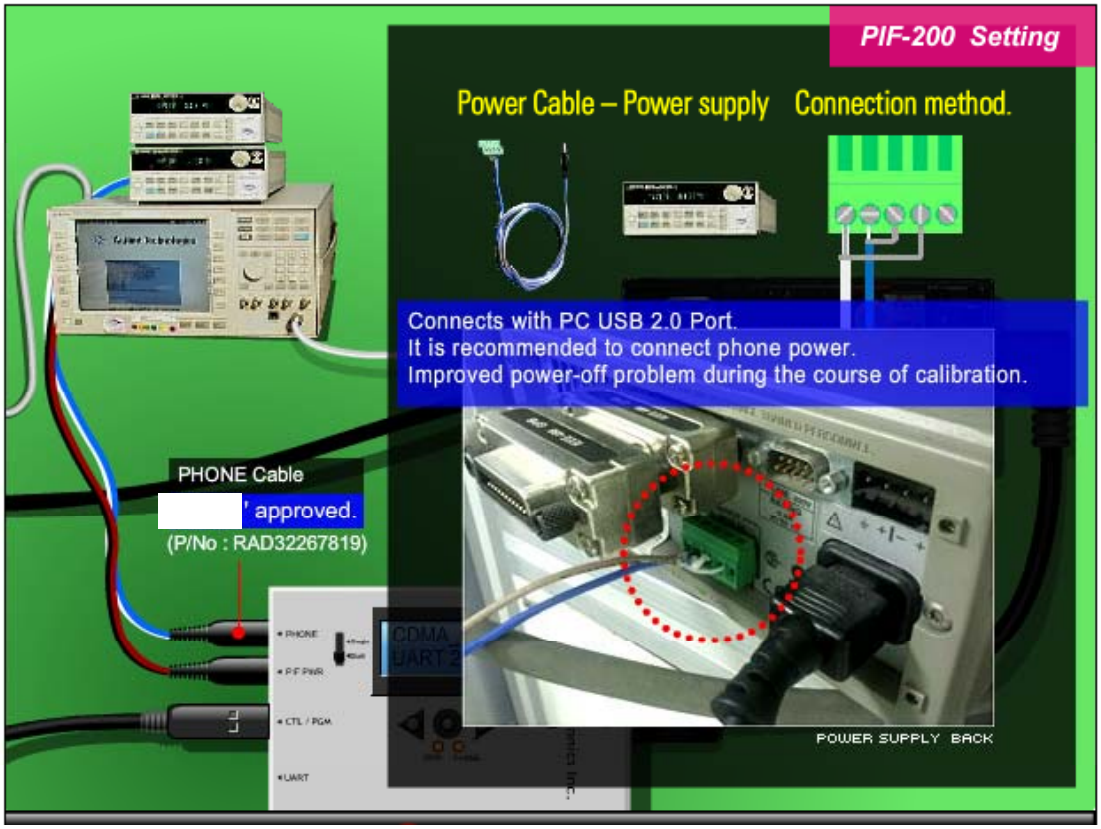

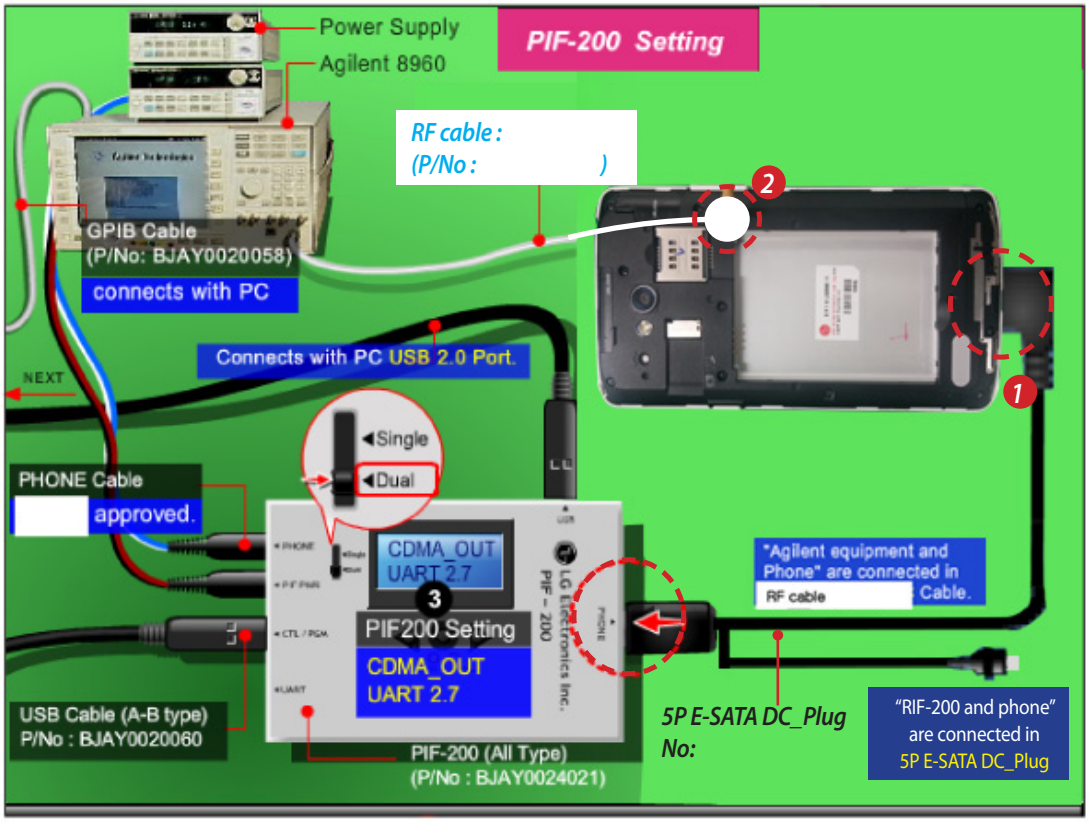

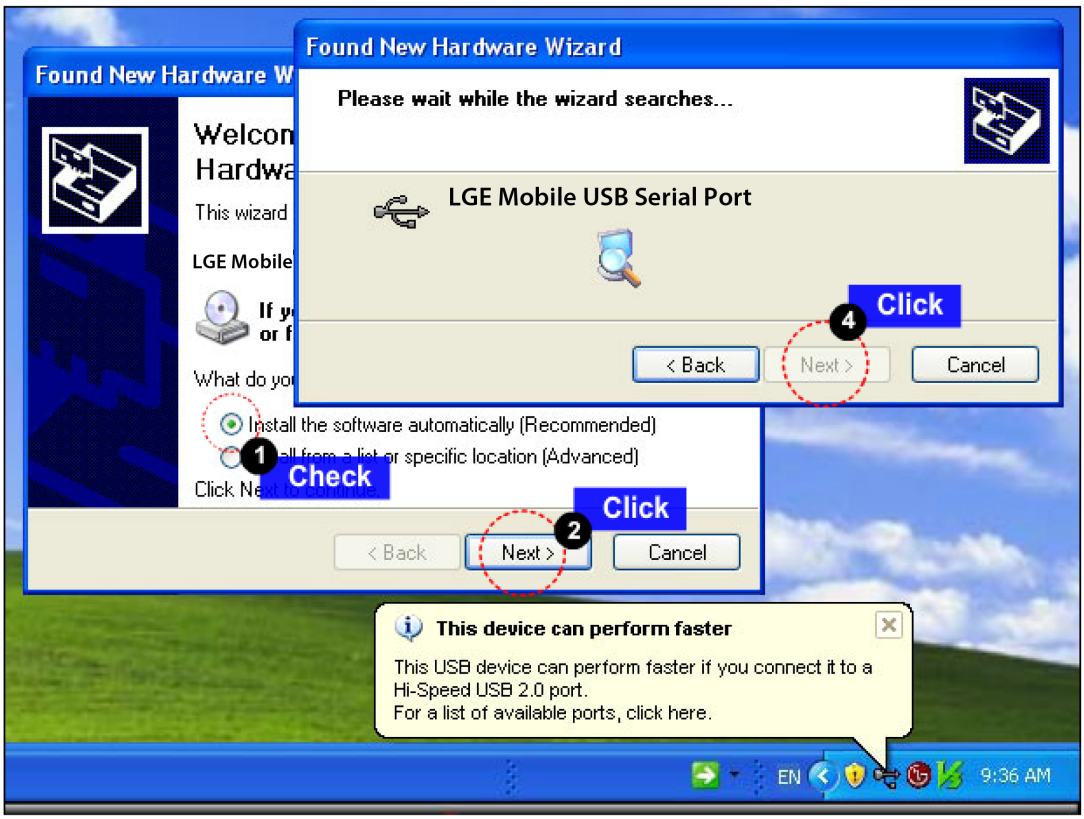

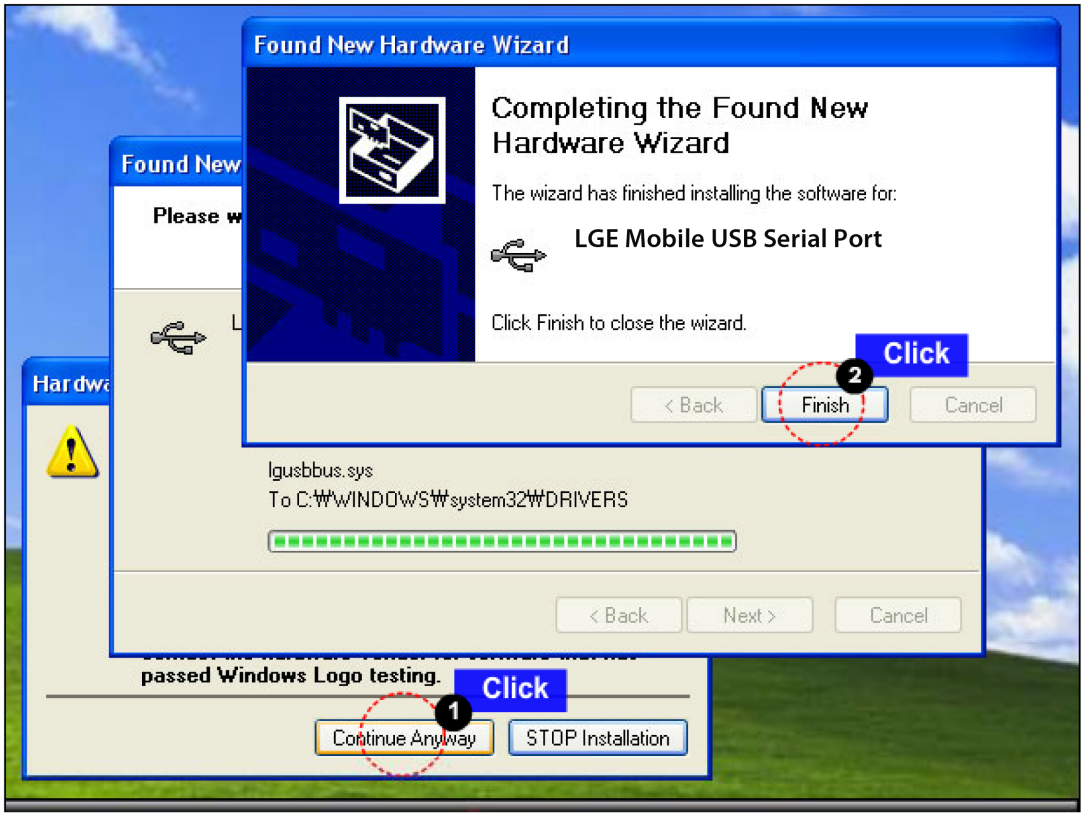

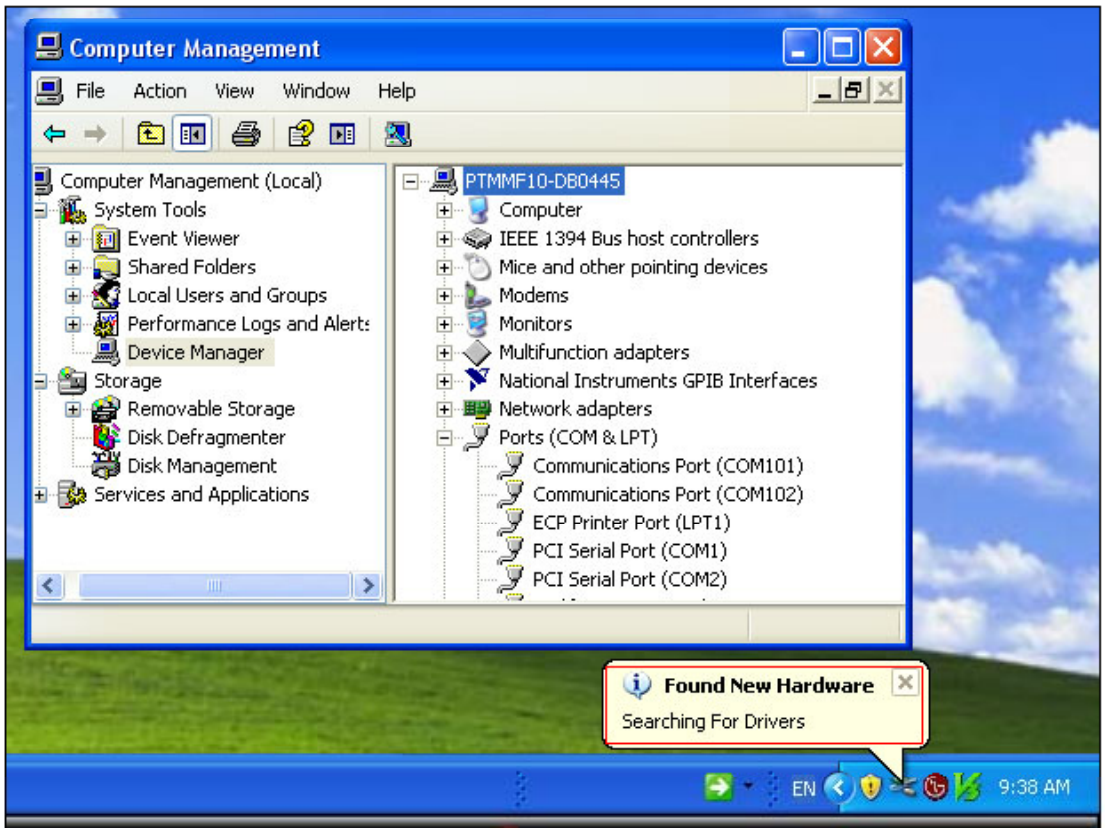

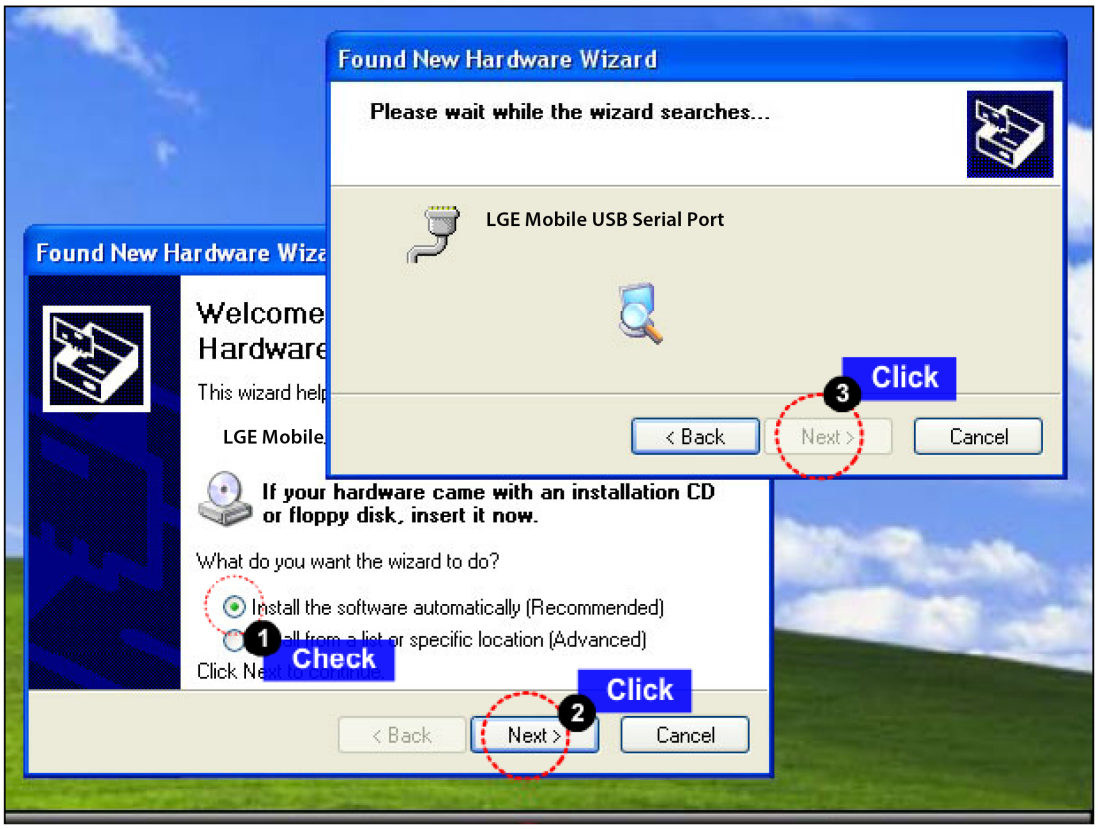

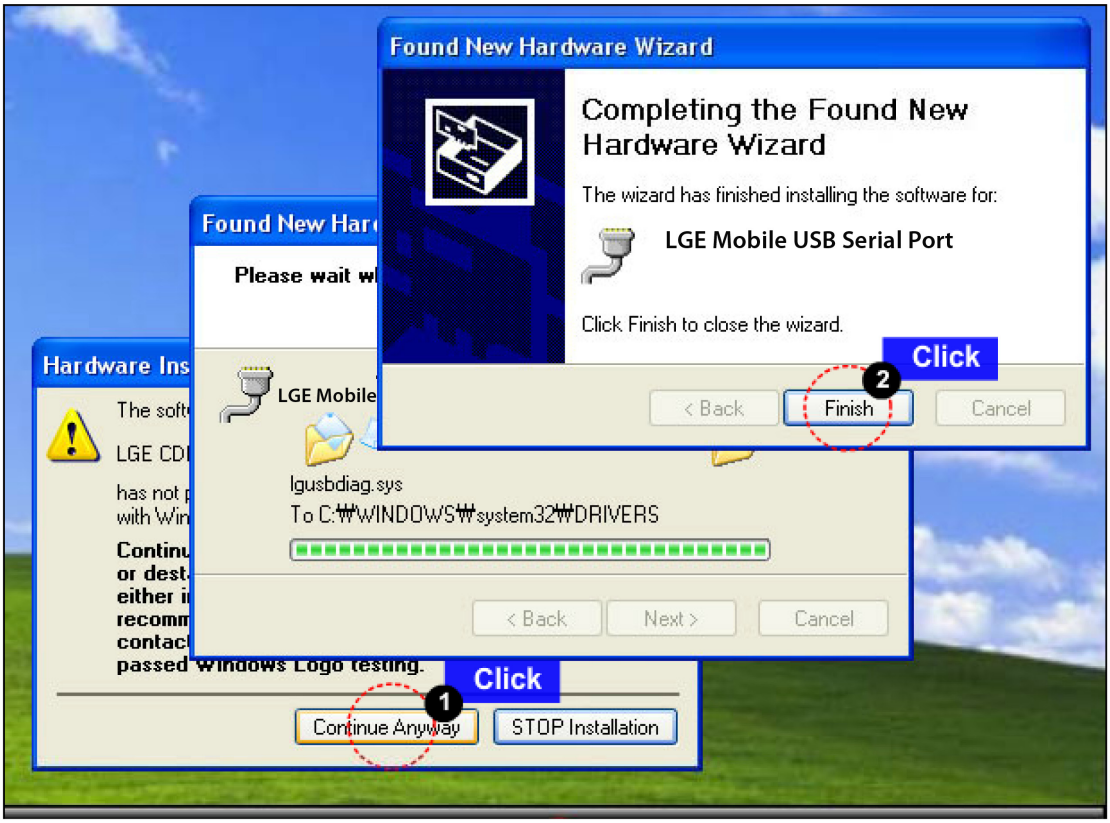

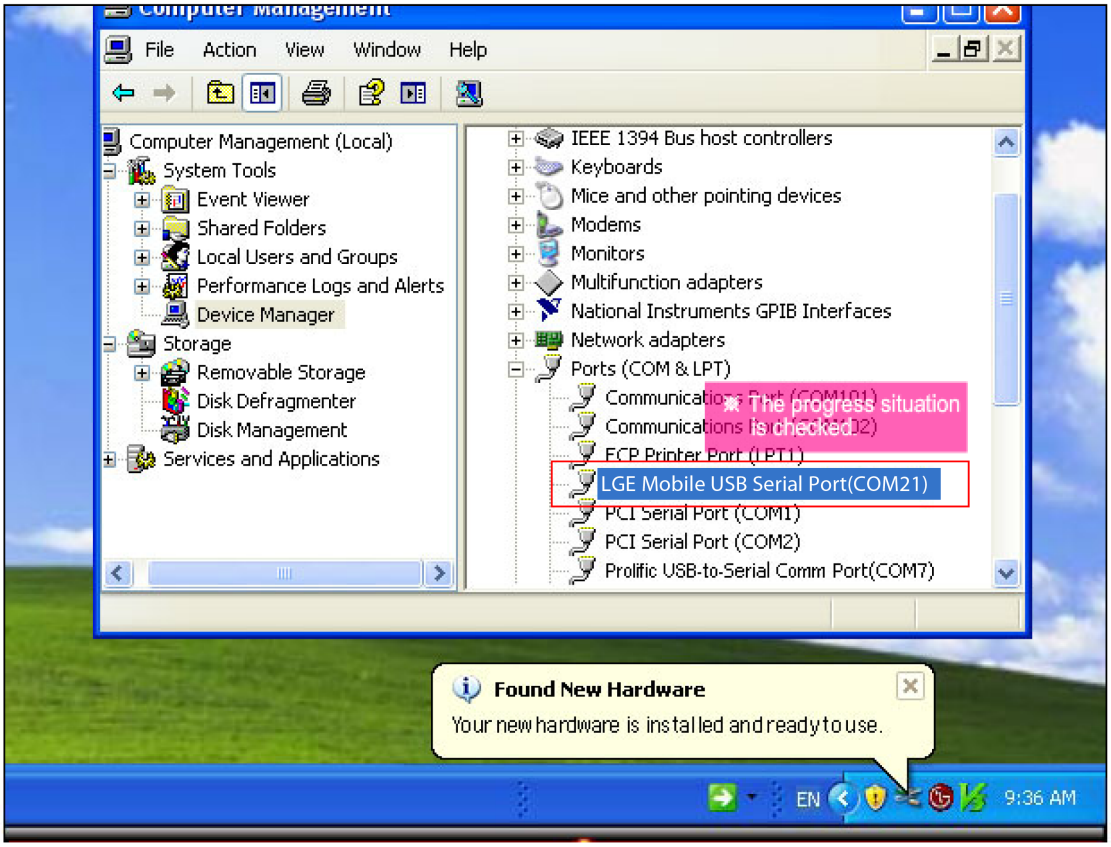

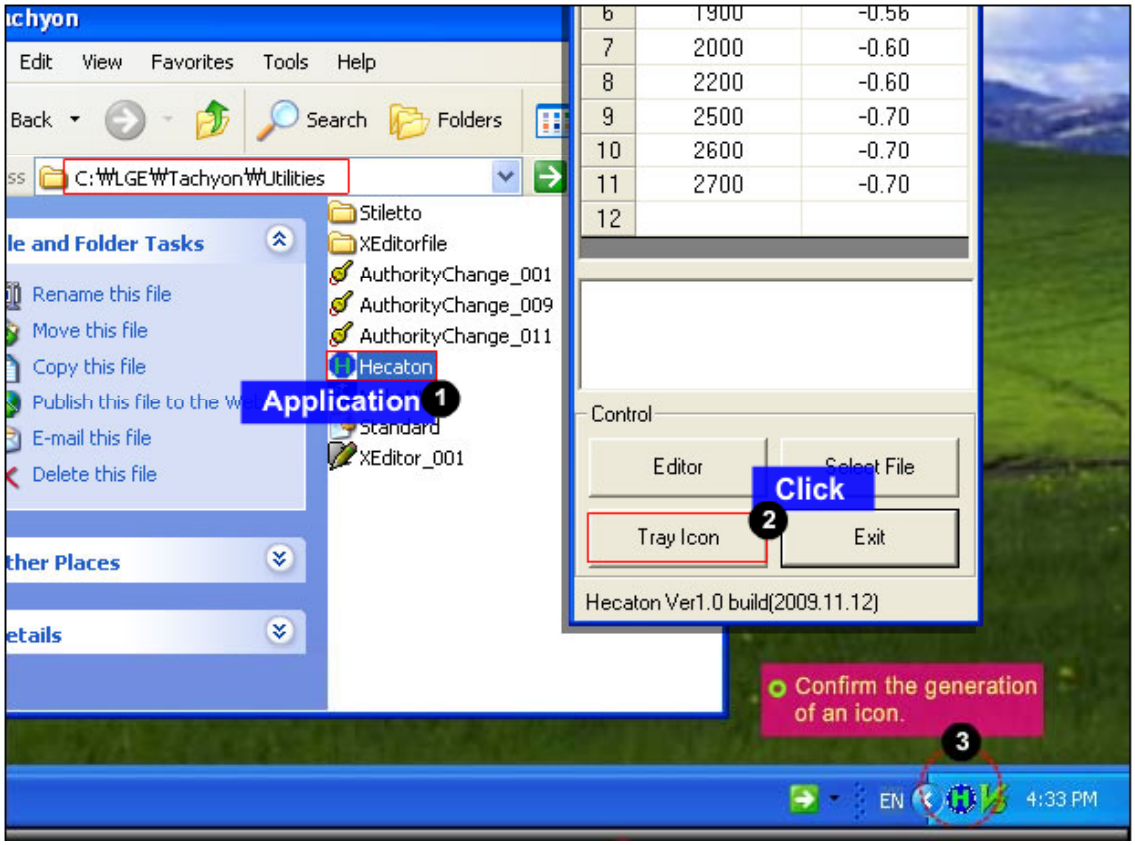

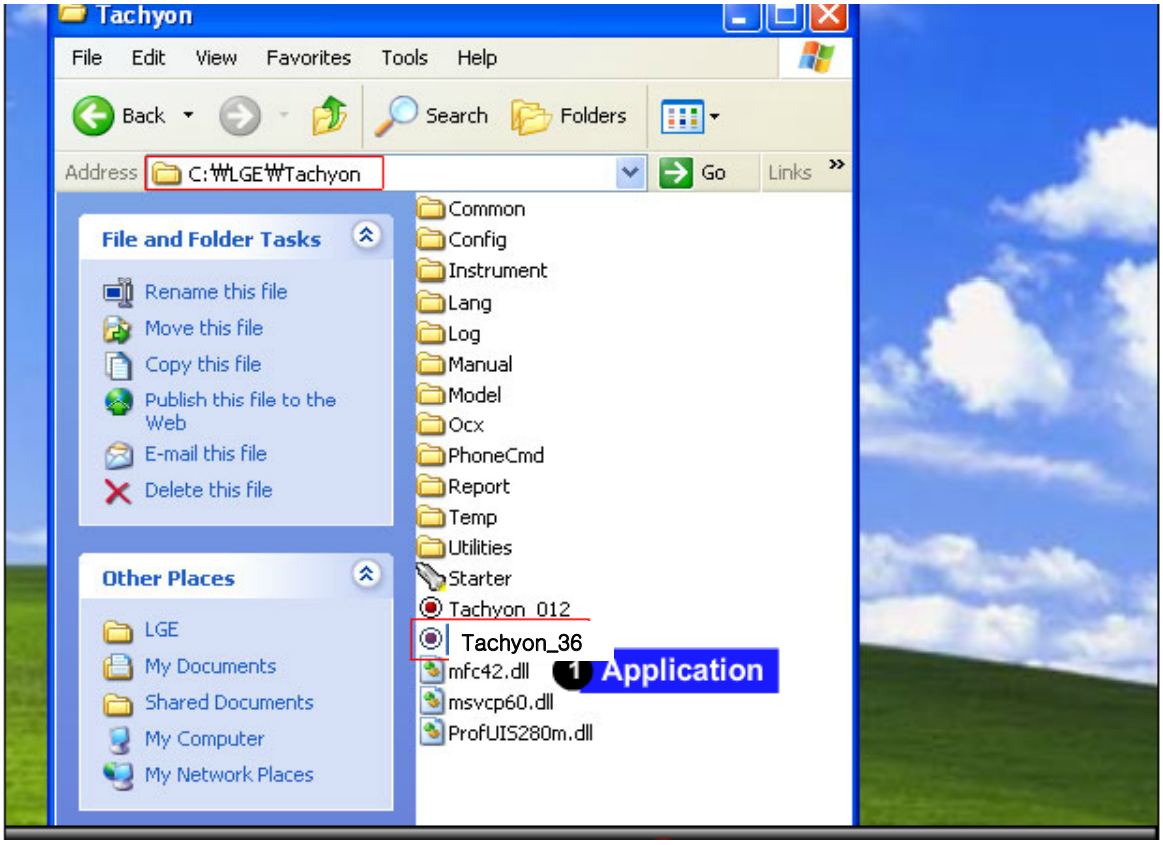

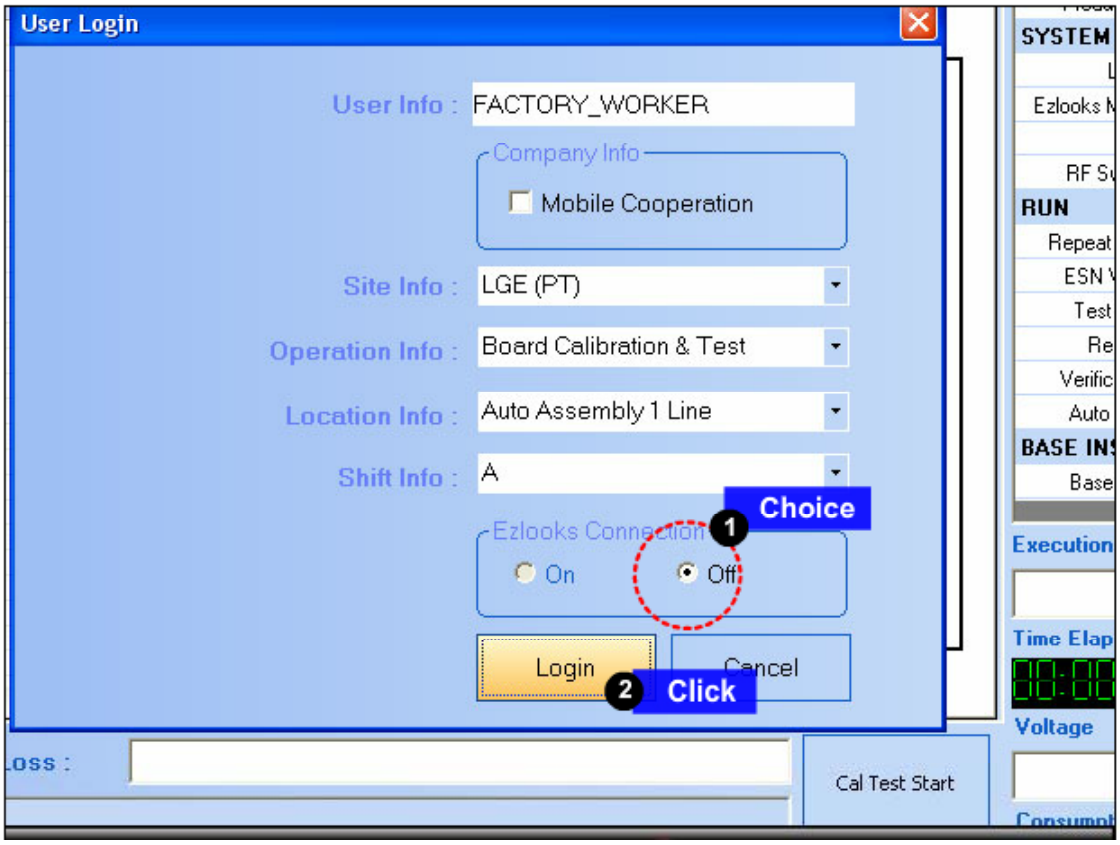

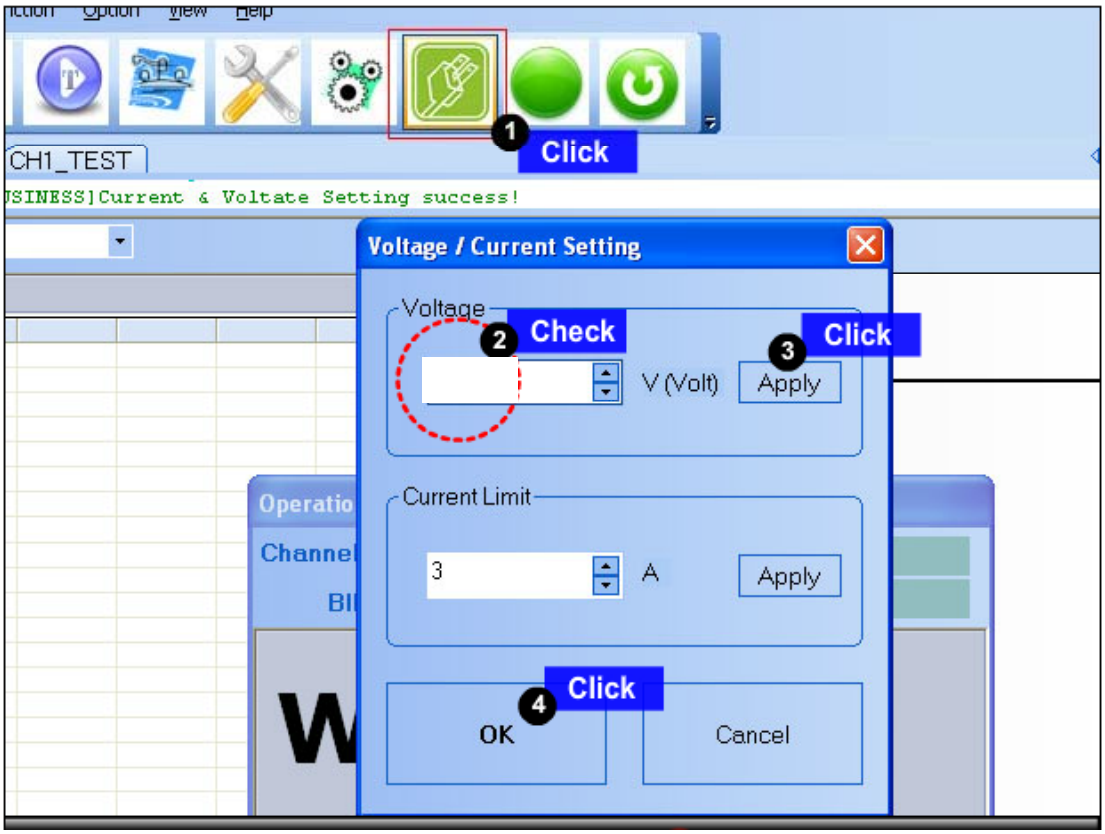

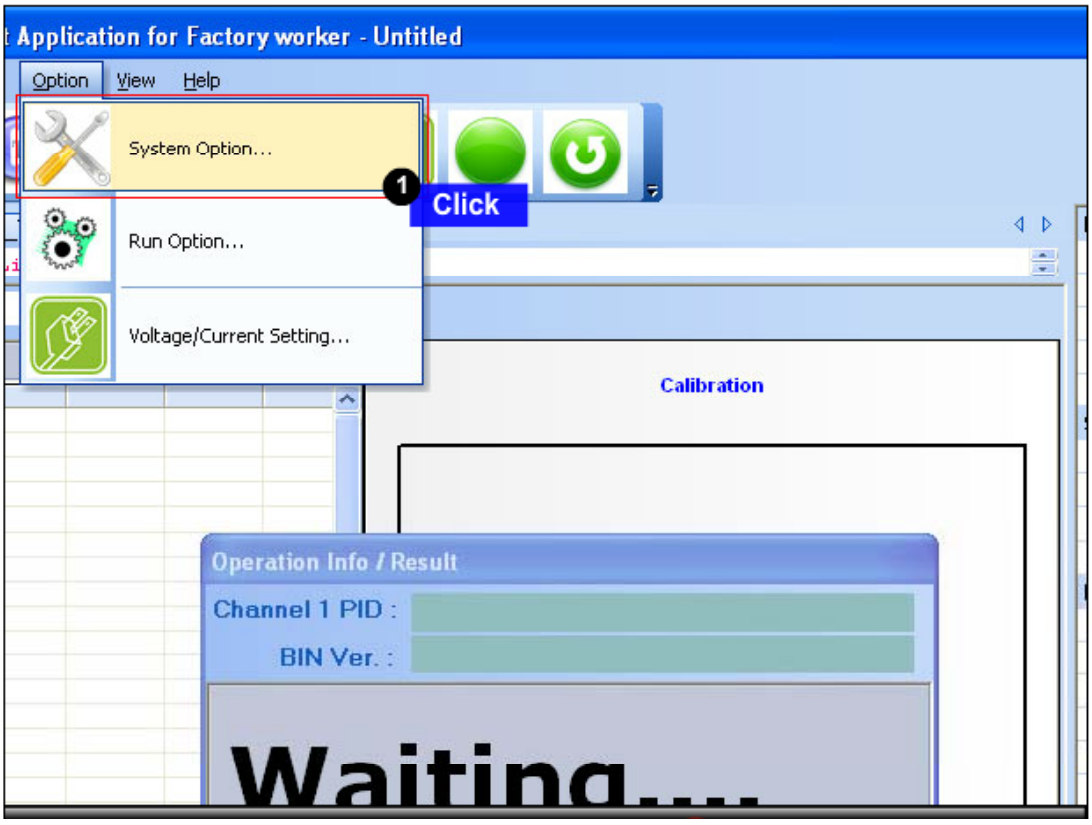

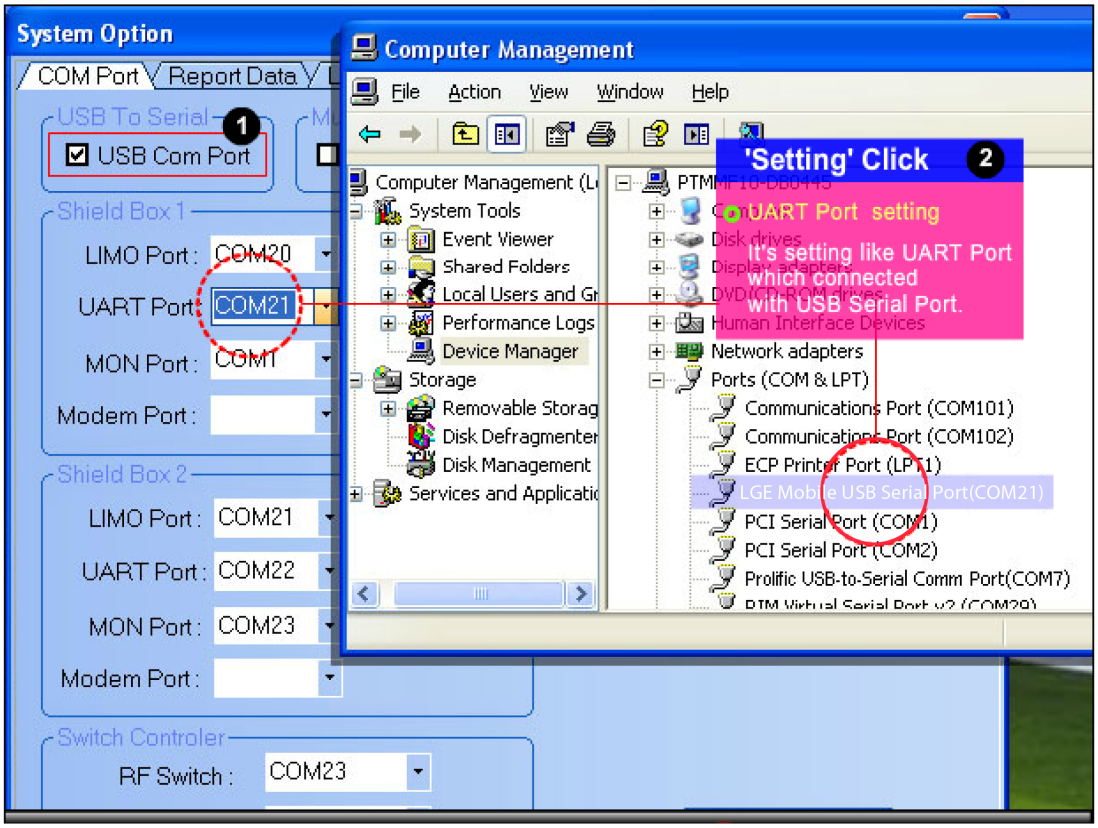

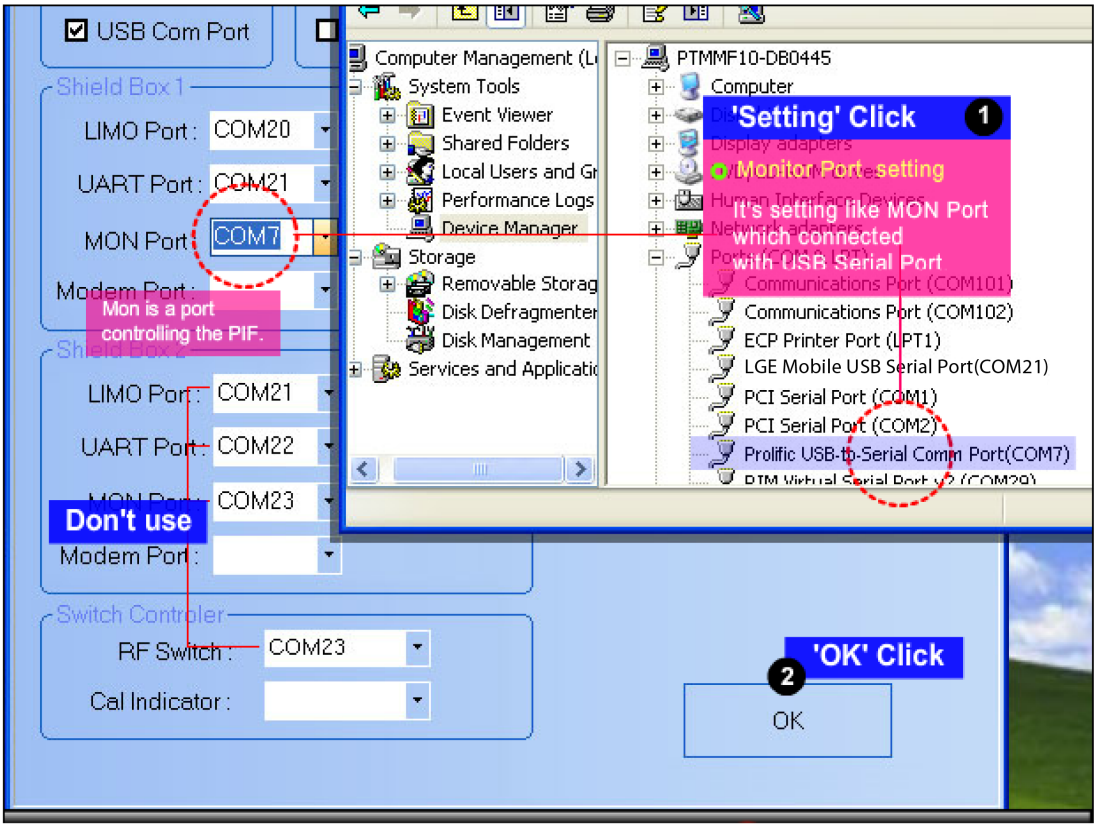

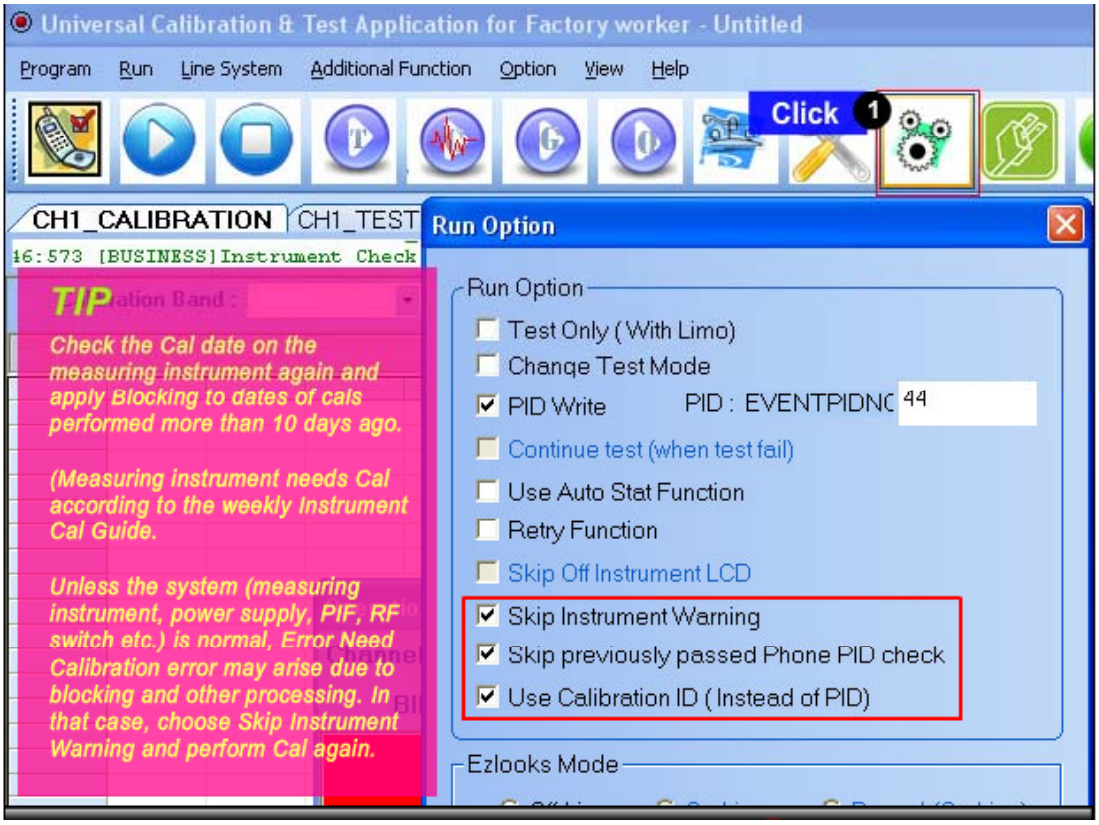

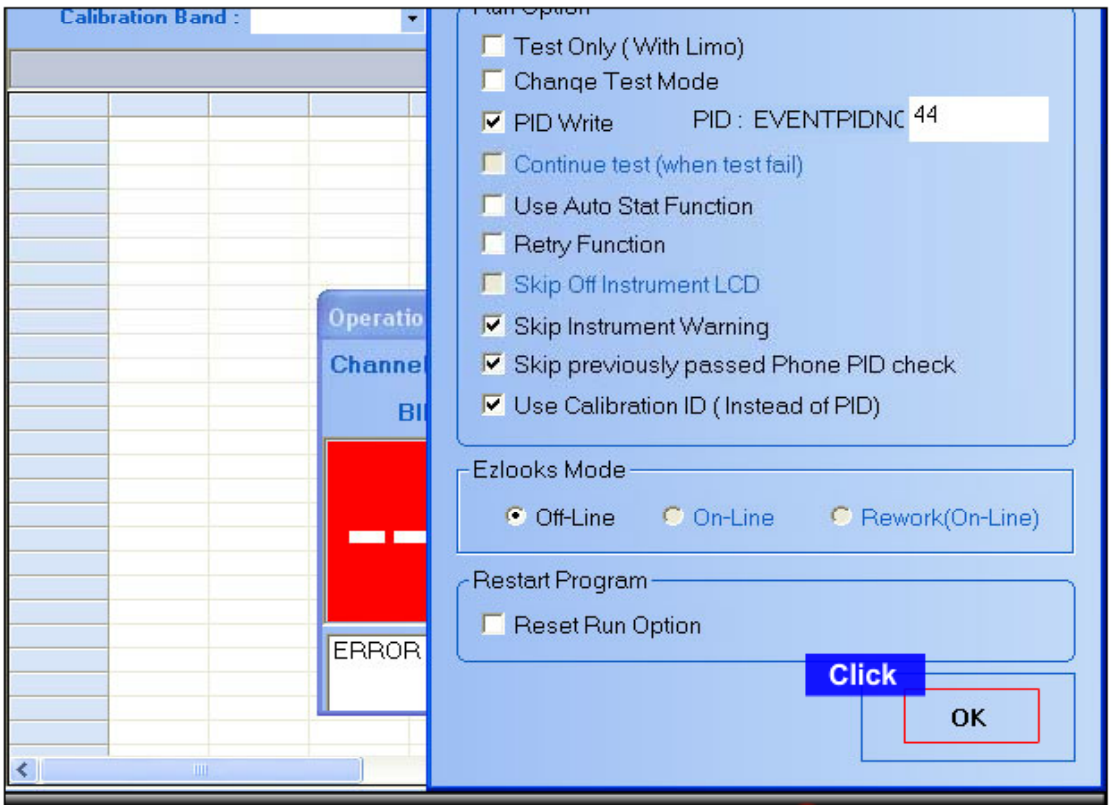

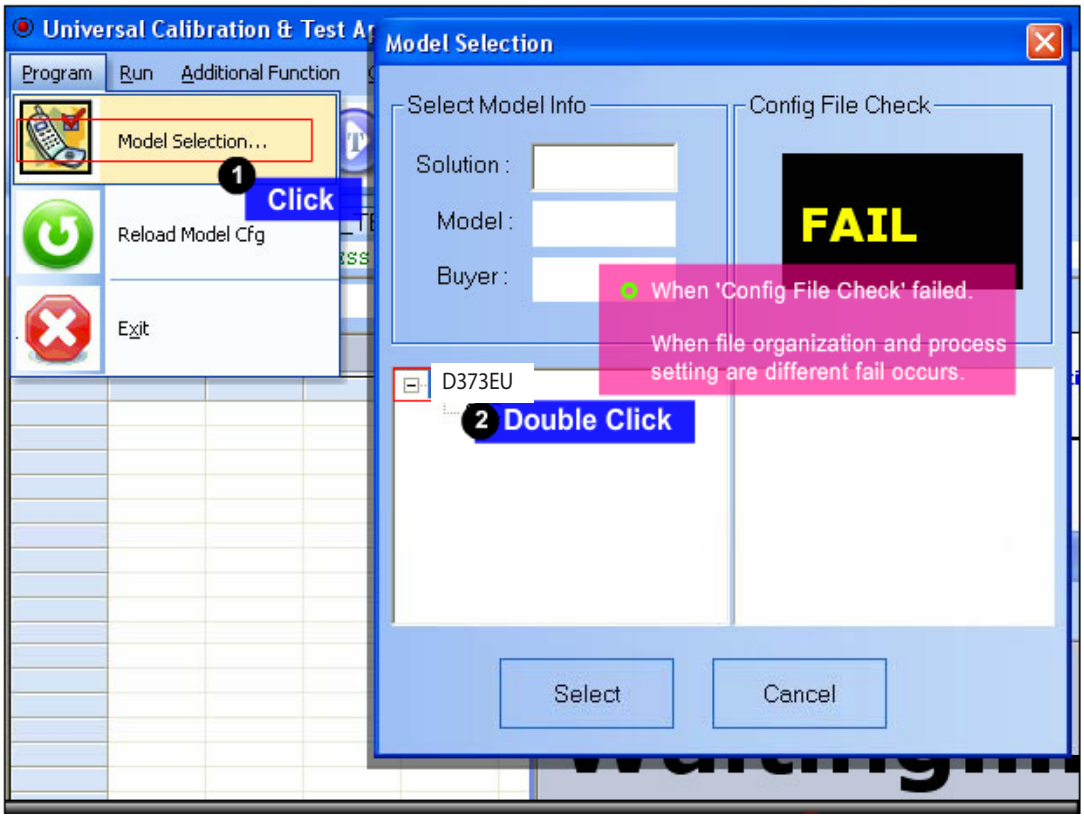

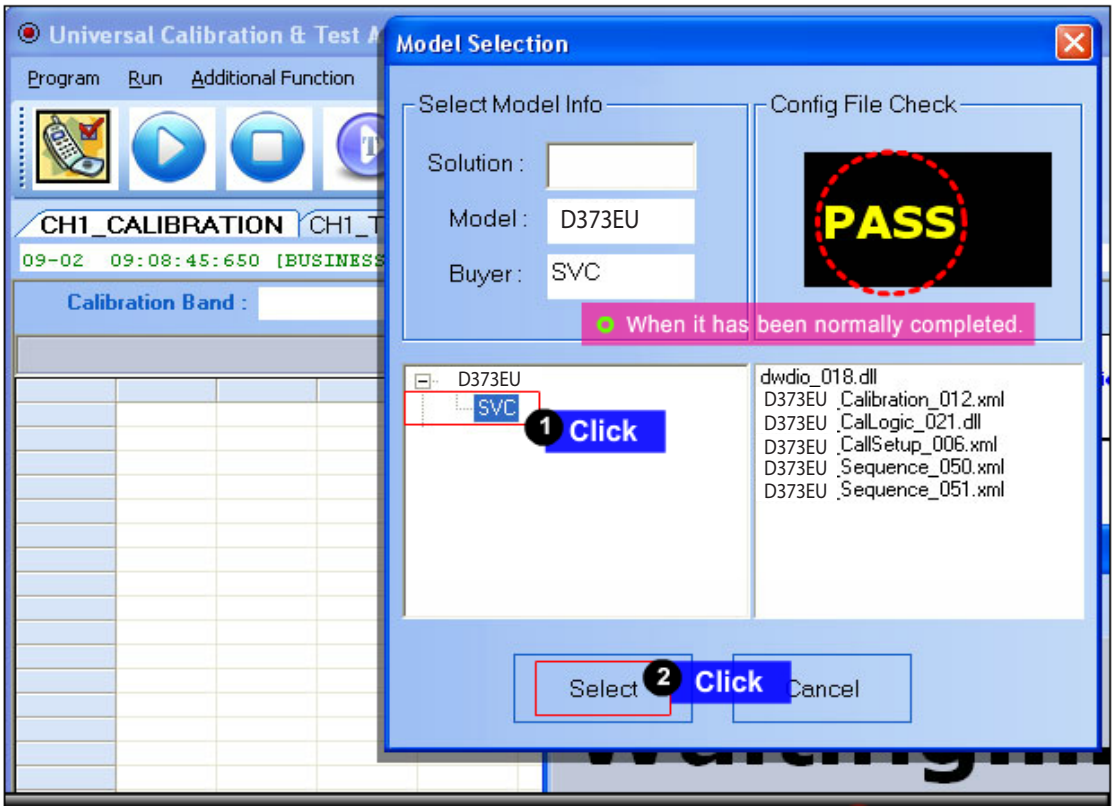

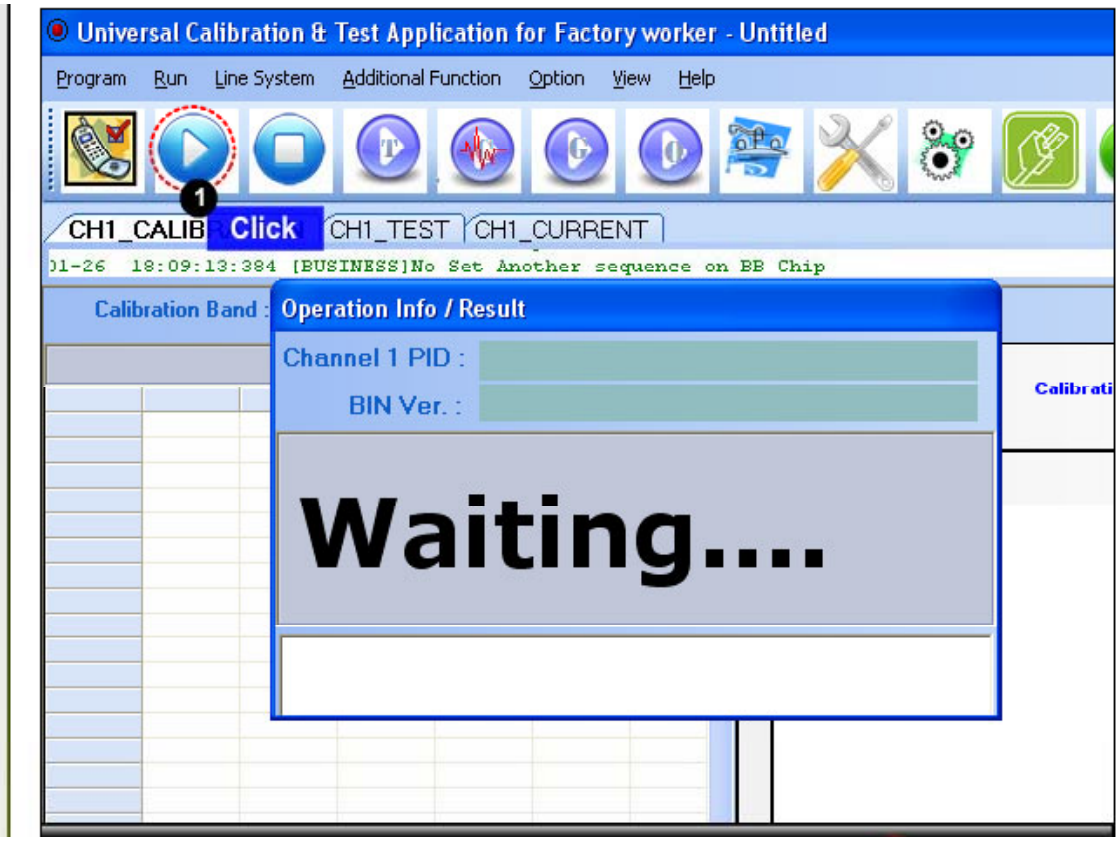

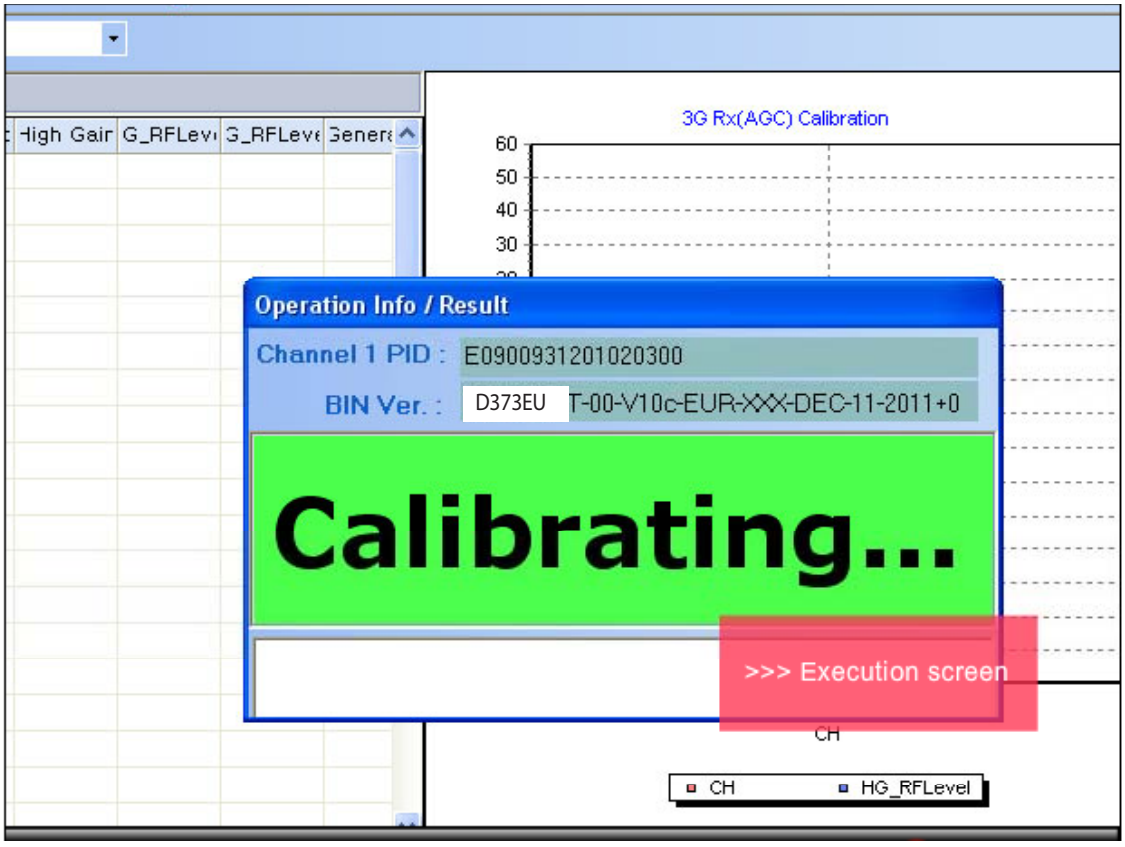

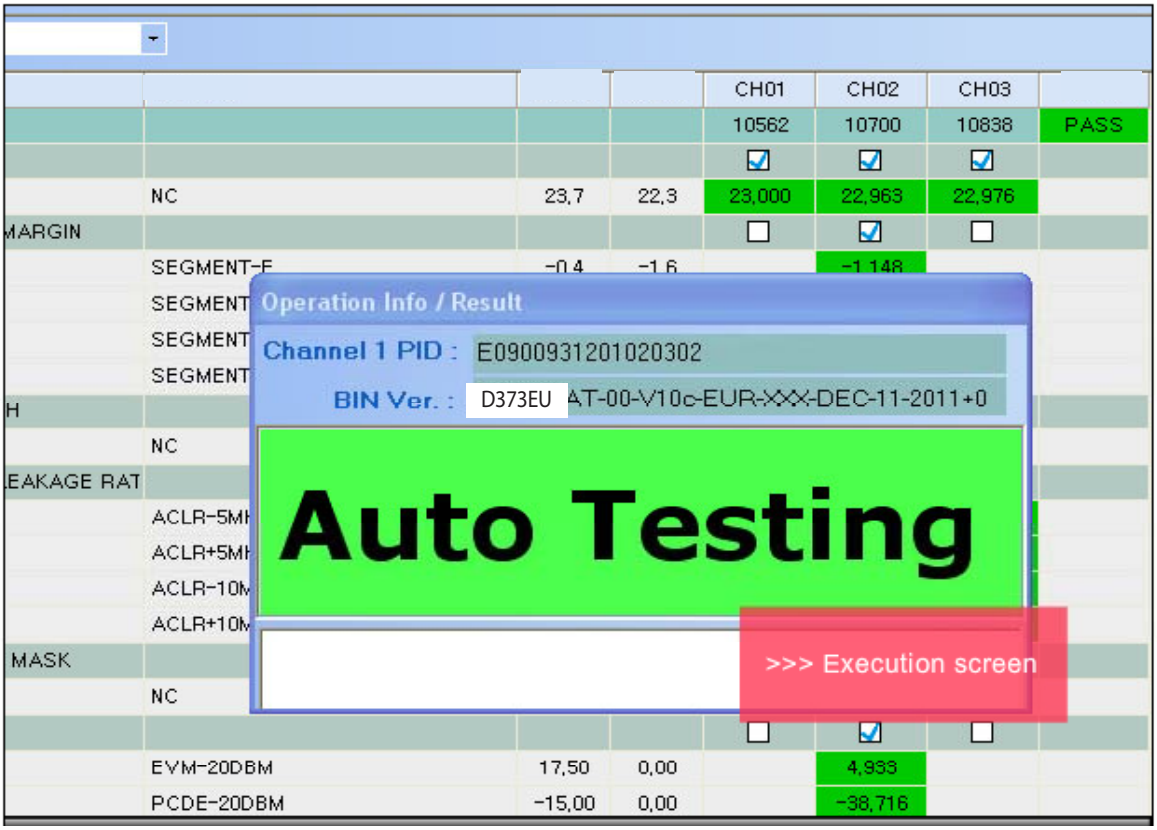

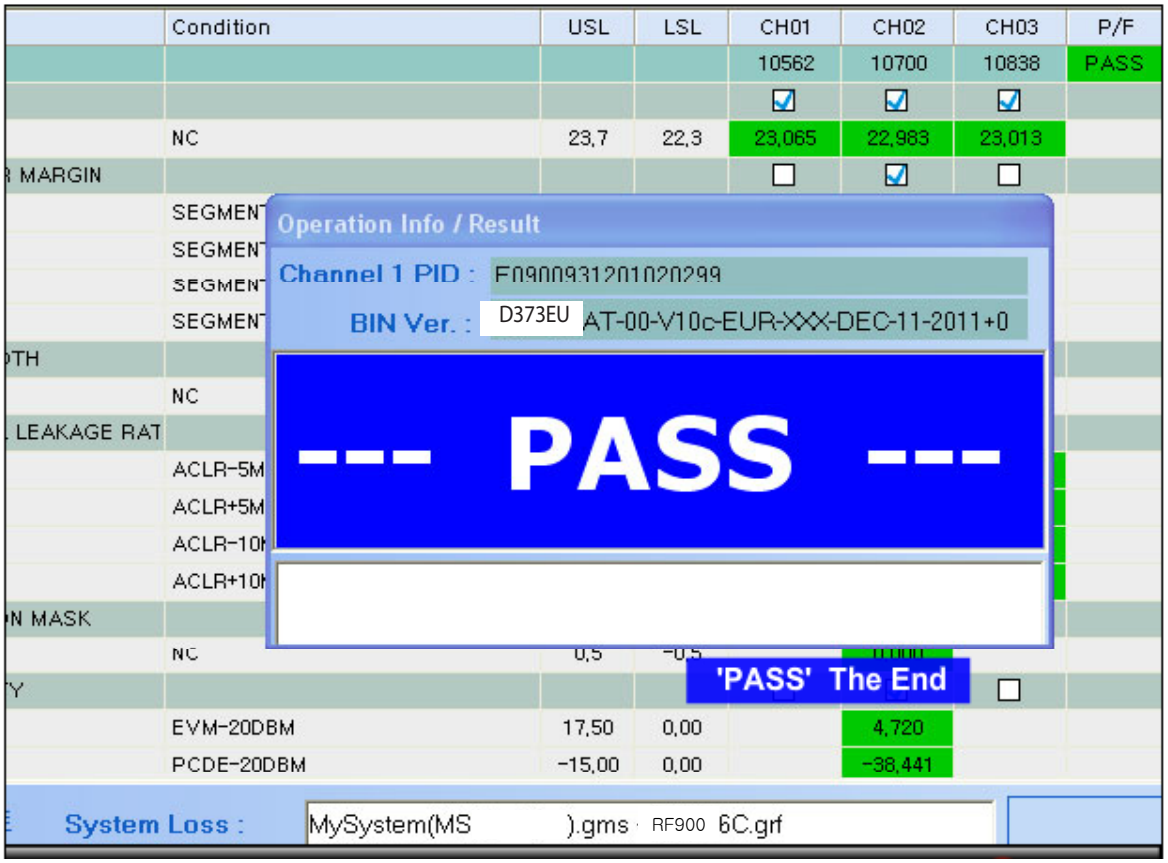

10. HIDDEN MENU

	**Hidden Menu Start** Start shortcut keys: 3845#*373#
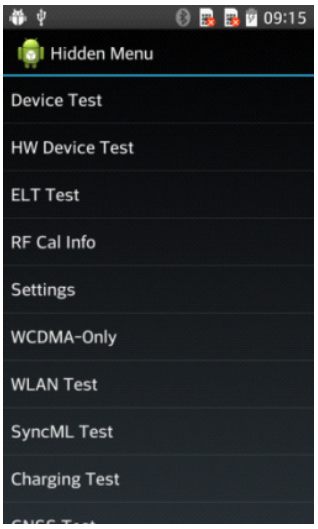	**Hidden Menu** Start the desired menu: Menu, click
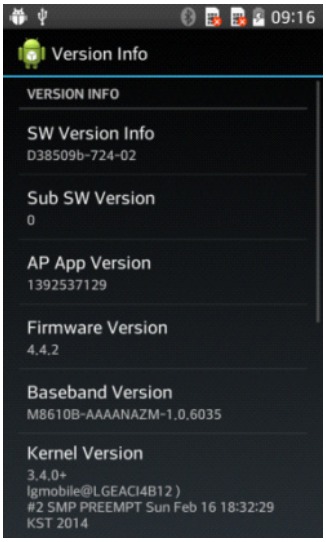	**Version Info** Classified Information representation -> Hidden Menu -> Settings -> Version Info

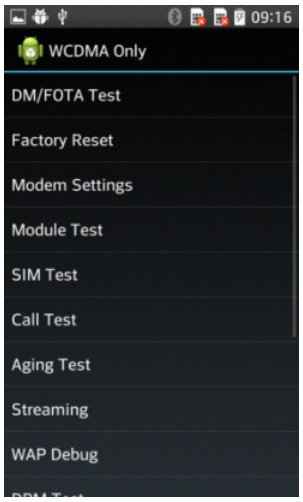

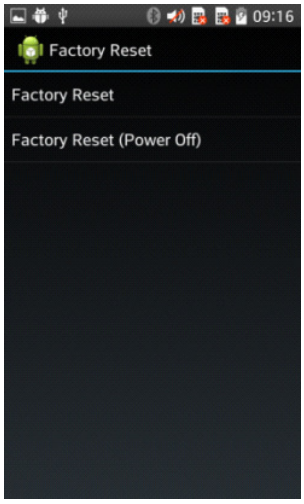

Factory Reset

Format SD Card : SD Card Data reset

Factory Reset : Reset as default Factory Settings

Delete Userdata : Disabled

-> Hidden menu

-> WCDMA-Only

-> Factory Reset

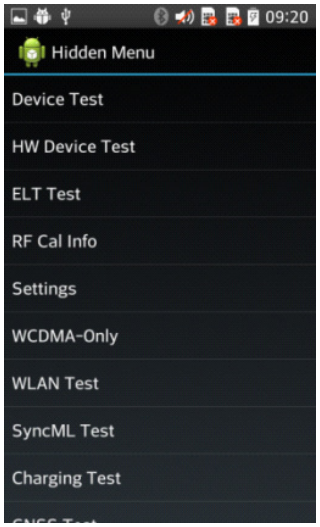

AAT Device Test

Allauto Test :

-> You can test all functions automatically

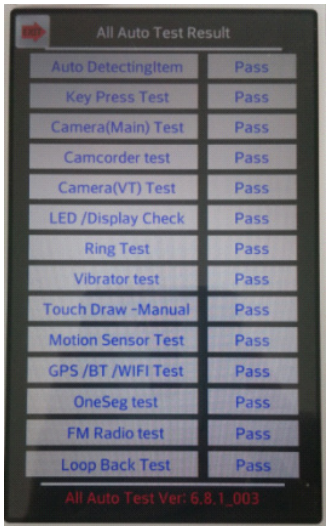

Auto All Test Result

-> You can check Test Results

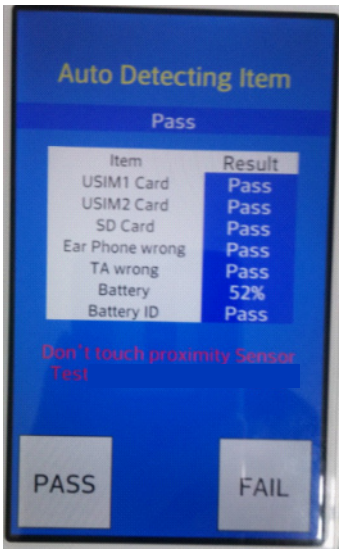	**Auto Detecting Item** Check below Items -> USIM Card & USIM Card2 : connecting both SIMs is PASS -> SD Card : connecting is PASS -> Ear Phone : No connecting is PASS -> Charging Mode : connecting is PASS -> Battery : higher than 20% is PASS
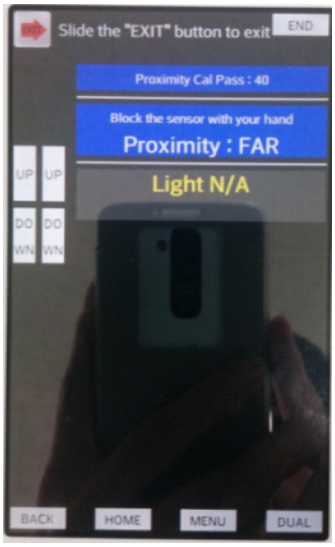	**Key Press Test** Check below Items Up/Down key : Hard Key Power key : Hard Key Menu key : Touch Key Home key : Touch Key Back key : Touch Key Proximity Sensor : Blind the Proximity sensor
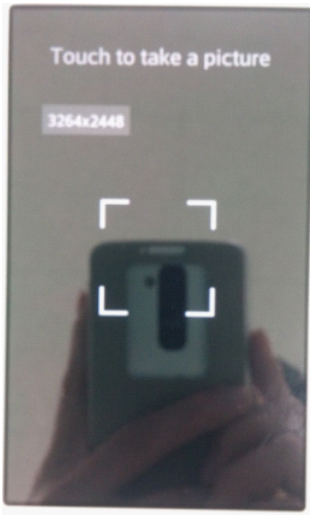 	**Main Camera Test – Snapshot** Touch screen to capture VT Camera Test

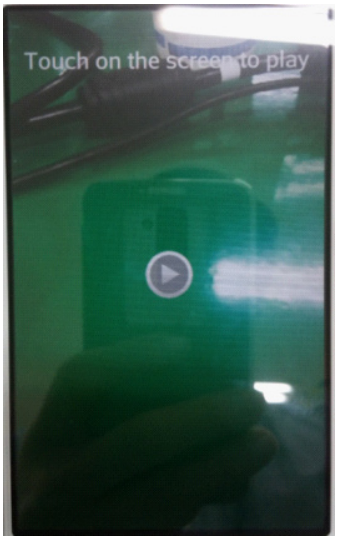	**Camera Test - Camcoding** Camera is recoding for 5 seconds
	**2D LCD Display Test** Check Black & White Color
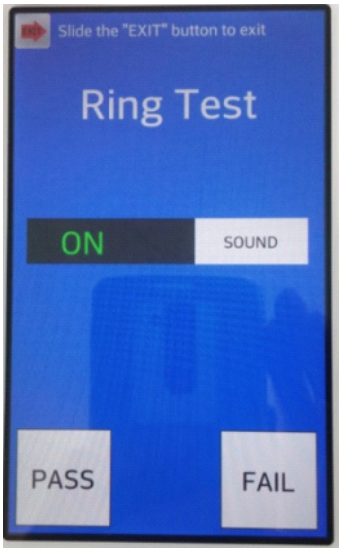	**Sound Test**

	**Vibrator Test**
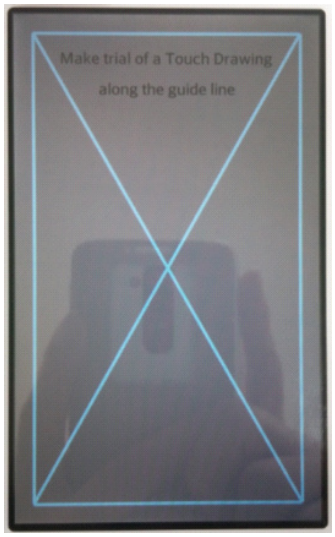	**Touch Drawing Test** Draw a guide line
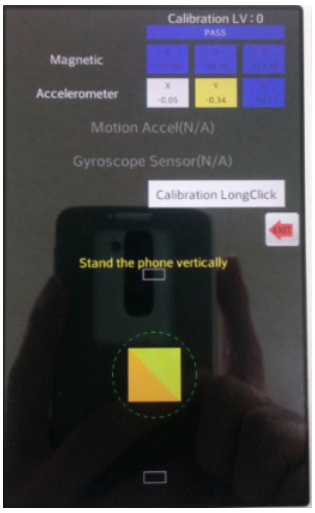	**Motion Sensor Test** Check 3 positions -> Position side -> Position horizontally -> Position Vertically

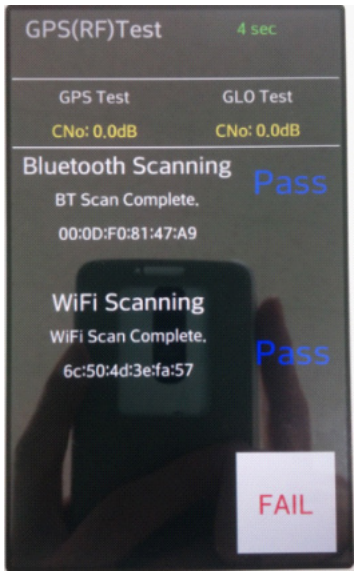	**GPS BT Wifi Test** GPS(RF) test : CNO is some value : OK Bluetooth Scanning is PASS : OK WiFi Scanning is PASS : OK
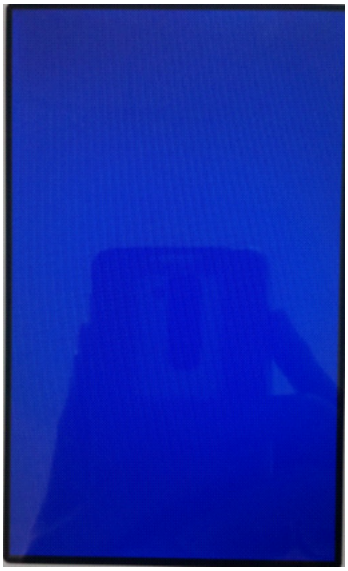	**OneSeg test** DTV is PASS : OK

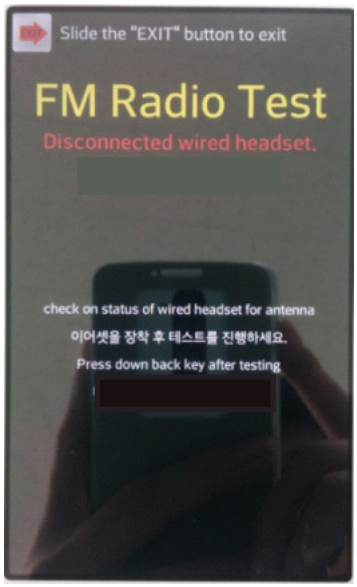	**FM Radio Test** 87.5 Mhz is scanned automatically Connect ear-jack	
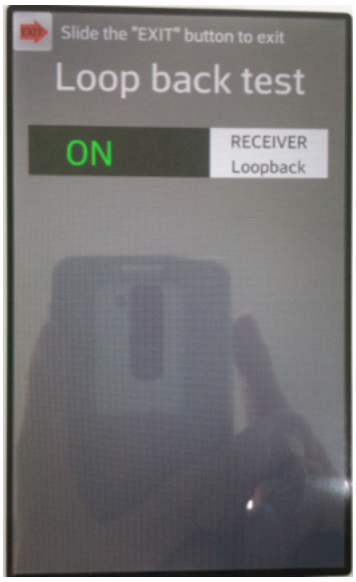 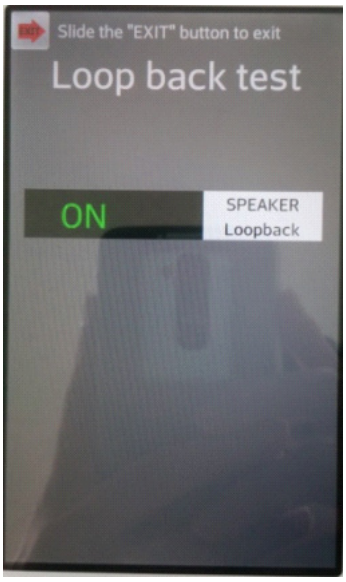		**Sound Loopback Test** "On" is test mode on "Off" is test mode off Can check Receiver mode, SPK mode.

11. DISASSEMBLE GUIDE

1. Disassemble Battery Cover	
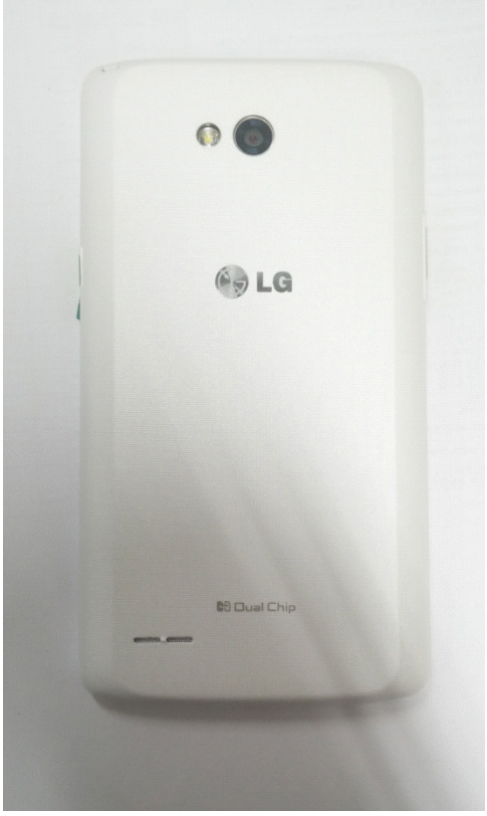	
	Take apart the battery cover using notch left low part

2. Disassemble Battery & Screw

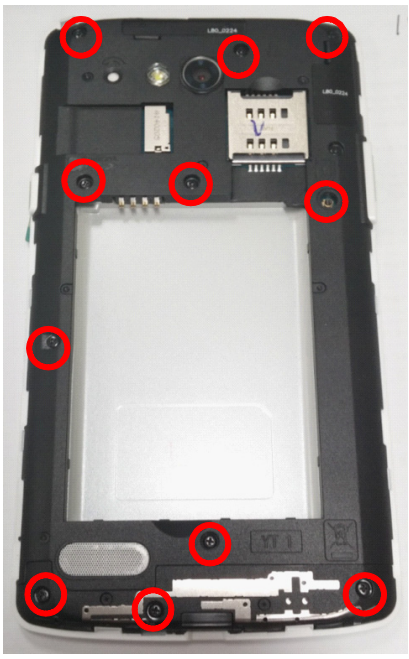

Take apart the battery and remove screw (11 point)

3. Disassemble REAR

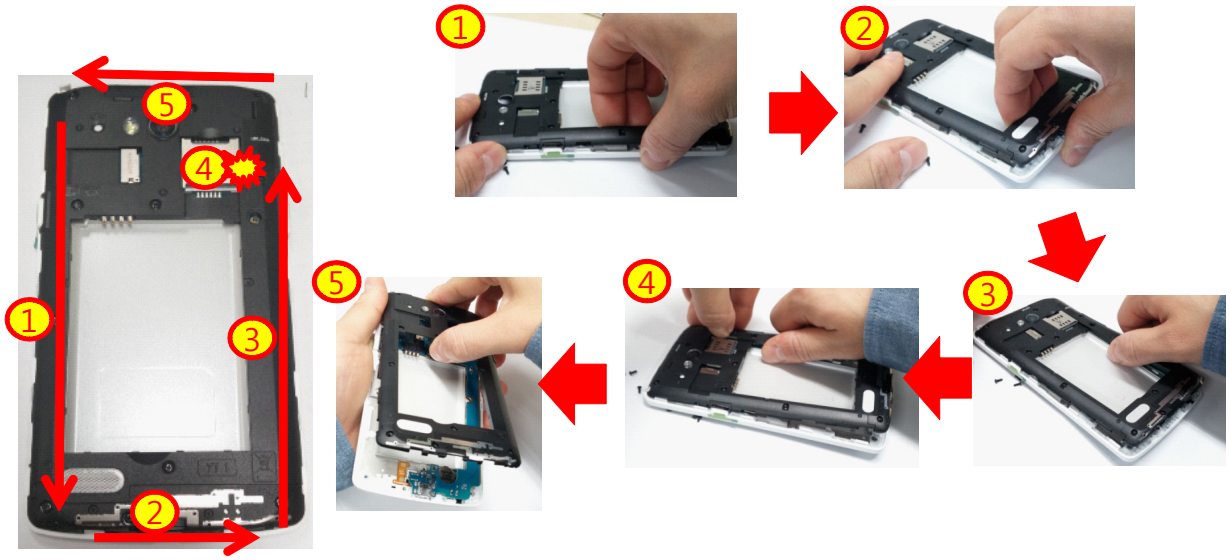

1. Using a finger, in the left of the phone and unhook bottom, right and top (you should unhook inside to outside / Back view)

4. Disassemble Main PCB

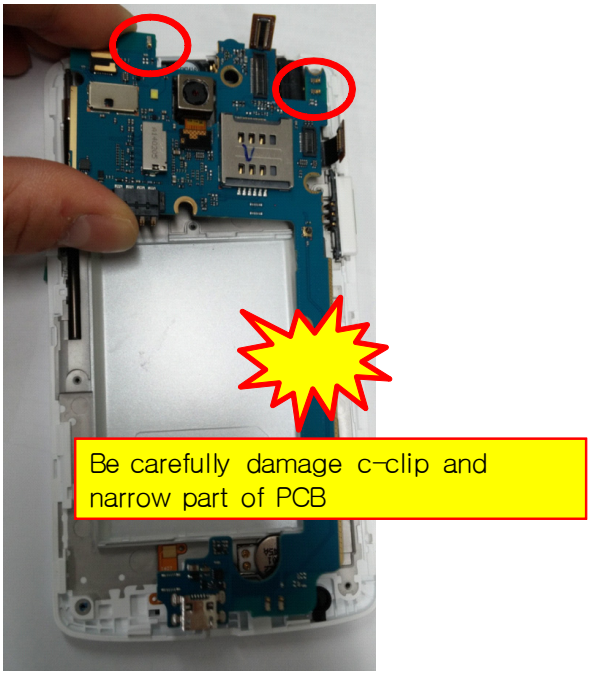

1. Take connectors (1~2) out of the Main PCB
2. Take apart the Main PCB

5. Complete disassembling D373EU

12. EXPLODED VIEW & REPLACEMENT PART LIST

This document is draft version, so the contents will be updated after registering the final one.