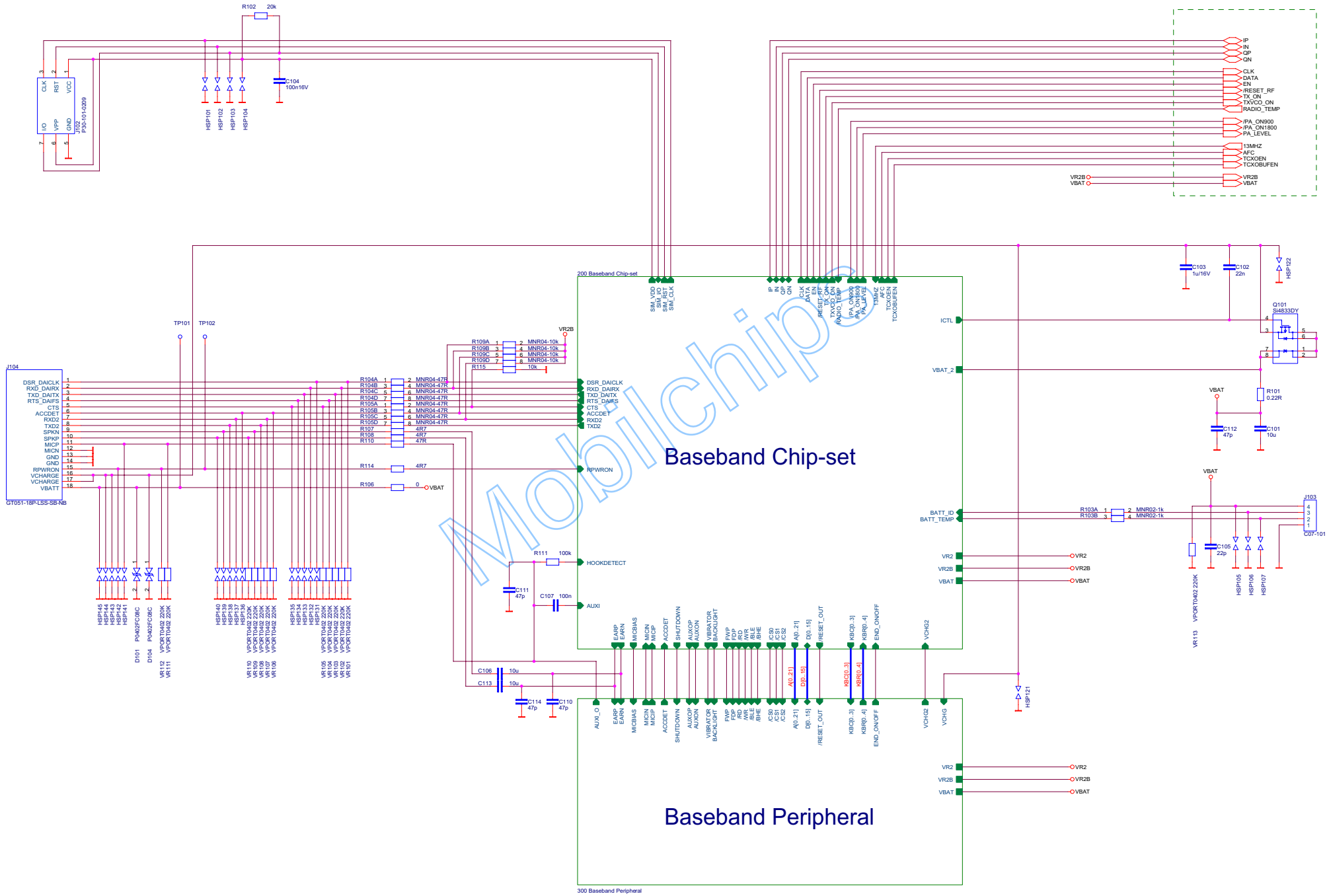
Baseband Chip-set
Baseband Peripheral
200 Baseband Chip-set
300 Baseband Peripheral
J104
GT051-18P-LSS-SB-NB
J102
P30-101-0209
J103
C07-101
Q101
SI4833DY
R102 20k
C104 100n16V
C103 1u/16V
C102 22n
R101 0.22R
C101 10u
C112 47p
C105 22p
R111 100k
C107 100n
C111 47p
C106 10u
C113 10u
C114 47p
C110 47p
TP101
TP102
VR2B
VBAT
VR2
ICTL
VBAT_2
BATT_ID
BATT_TEMP
DSR_DAICLK
RXD_DAIRX
TXD_DAITX
RTS_DAIFS
CTS
ACCDET
RXD2
TXD2
RPWRON
HOOKDETECT
AUXI
AUX_O
EARP
EARN
MICBIAS
MICN
MICP
SHUTDOWN
AUXOP
AUXON
VIBRATOR
BACKLIGHT
FVP
FDP
RD
/WR
/BLE
/BHE
/CS0
/CS1
/CS2
A[0..21]
D[0..15]
/RESET_OUT
KB[0..3]
KBR[0..4]
END_ON/OFF
VCHG2
VCHG
IP
IN
QP
QN
CLK
DATA
EN
/RESET_RF
TX_ON
TXVCO_ON
RADIO_TEMP
/PA_ON900
/PA_ON1800
PA_LEVEL
13MHZ
AFC
TCXOEN
TCXOBUFEN
SIM_VDD
SIM_IO
SIM_RST
SIM_CLK
Mobilchips

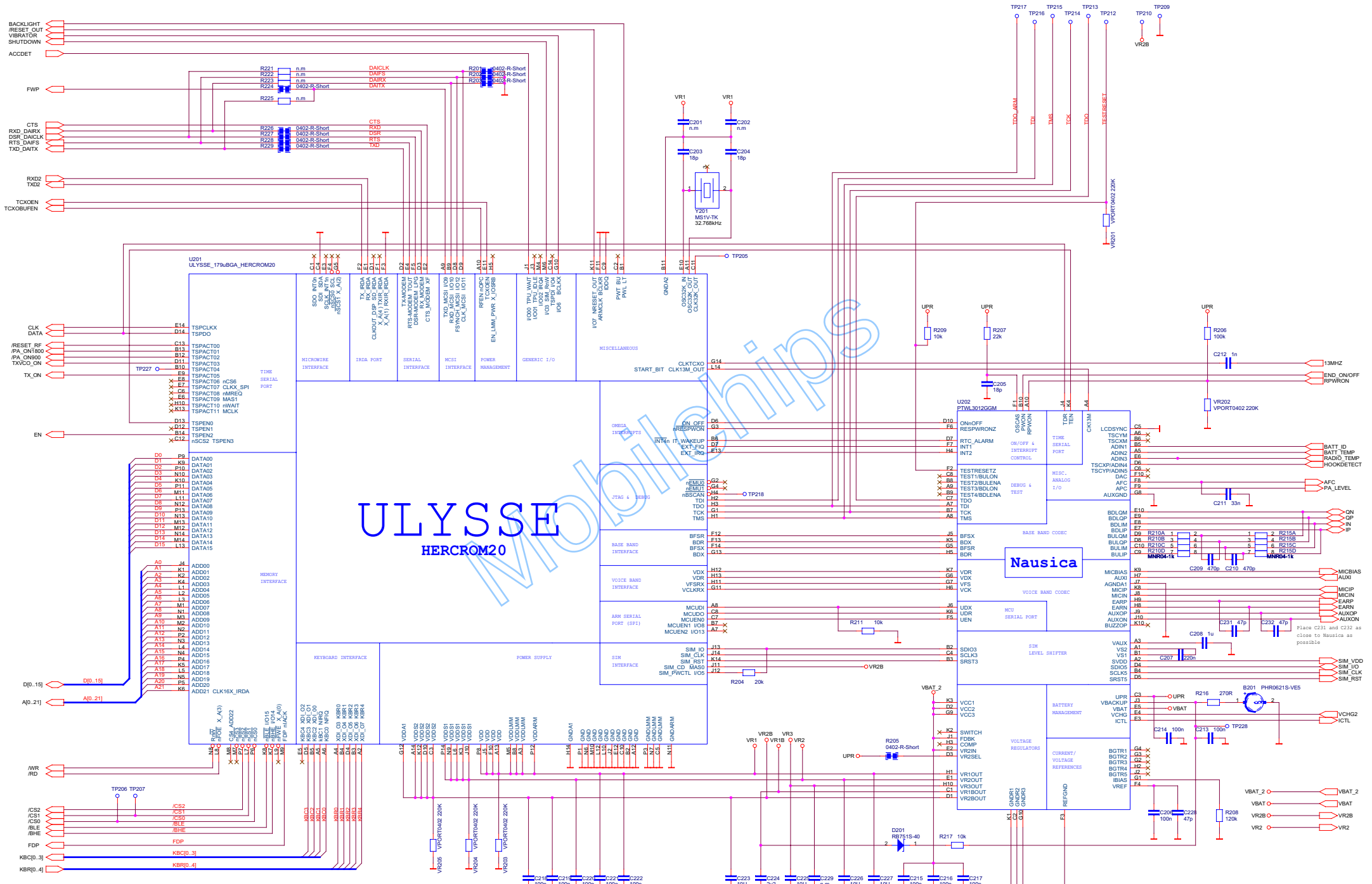
ULYSSE
HERCROM20
U201
ULYSSE_179uBGA_HERCROM20
U202
PTWL3012GGM
Nausica
Y201
MS1V-TK
32.768kHz
MICROWIRE INTERFACE
IRDA PORT
SERIAL INTERFACE
MCSI INTERFACE
POWER MANAGEMENT
GENERIC I/O
MISCELLANEOUS
TIME SERIAL PORT
MEMORY INTERFACE
KEYBOARD INTERFACE
POWER SUPPLY
OMEGA INTERRUPTS
JTAG & DEBUG
BASE BAND INTERFACE
VOICE BAND INTERFACE
ARM SERIAL PORT (SPI)
SIM INTERFACE
ON/OFF & INTERRUPT CONTROL
DEBUG & TEST
MISC. ANALOG I/O
BASE BAND CODEC
VOICE BAND CODEC
MCU SERIAL PORT
SIM LEVEL SHIFTER
BATTERY MANAGEMENT
VOLTAGE REGULATORS
CURRENT/ VOLTAGE REFERENCES
Place C231 and C232 as close to Nausica as possible
BaseBand supply overview :
VR1 (1.8V) Digital core & RTC Permanent
VR1B 2.0V Nova internal logic ON/OFF
VR2 2.0/2.9V Memory devices Permanent
VR2B 2.9V Nova & Samson peripherals Permanent
VR3 2.9V Nova analog supply ON/OFF
LITEON Lite-On Technology Corp.
Title
B1300 Baseband Chipset
Size A2
Document Number <Doc>
Rev 2.2
Date: Wednesday, January 22, 2003
Sheet 1 of 1
Mobilchips

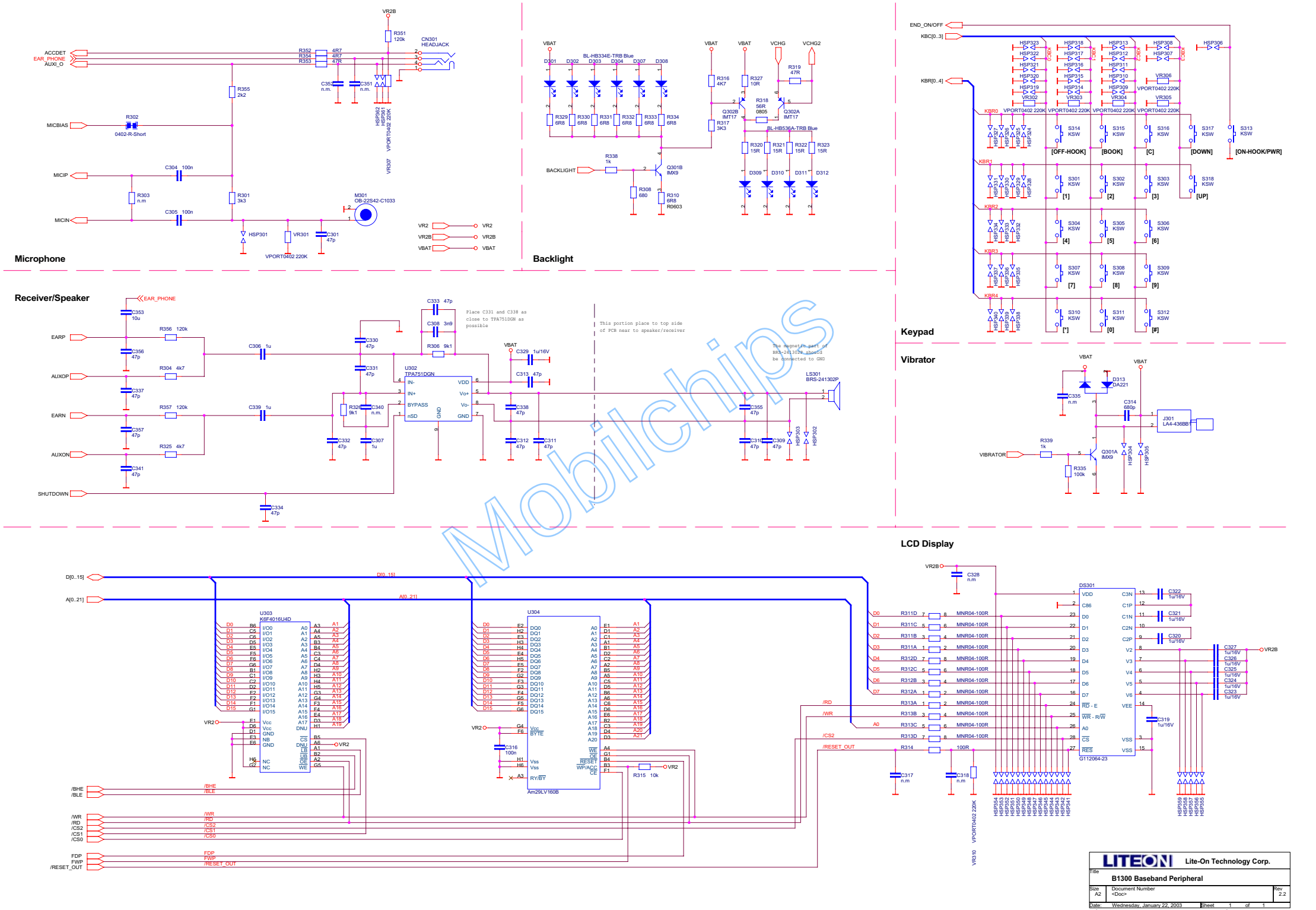
Microphone
Backlight
Keypad
Vibrator
Receiver/Speaker
LCD Display
CN301 HEADJACK
M301 OB-22542-C1033
U302 TPA751DGN
LS301 BRS-241302P
U303 K6F4016U4D
U304 Am29LV160B
DS301 G112064-23
J301 LA4-436BB
Mobilchips
LITEON Lite-On Technology Corp.
B1300 Baseband Peripheral
Size A2
Document Number <Doc>
Rev 2.2
Date: Wednesday, January 22, 2003
Sheet 1 of 1

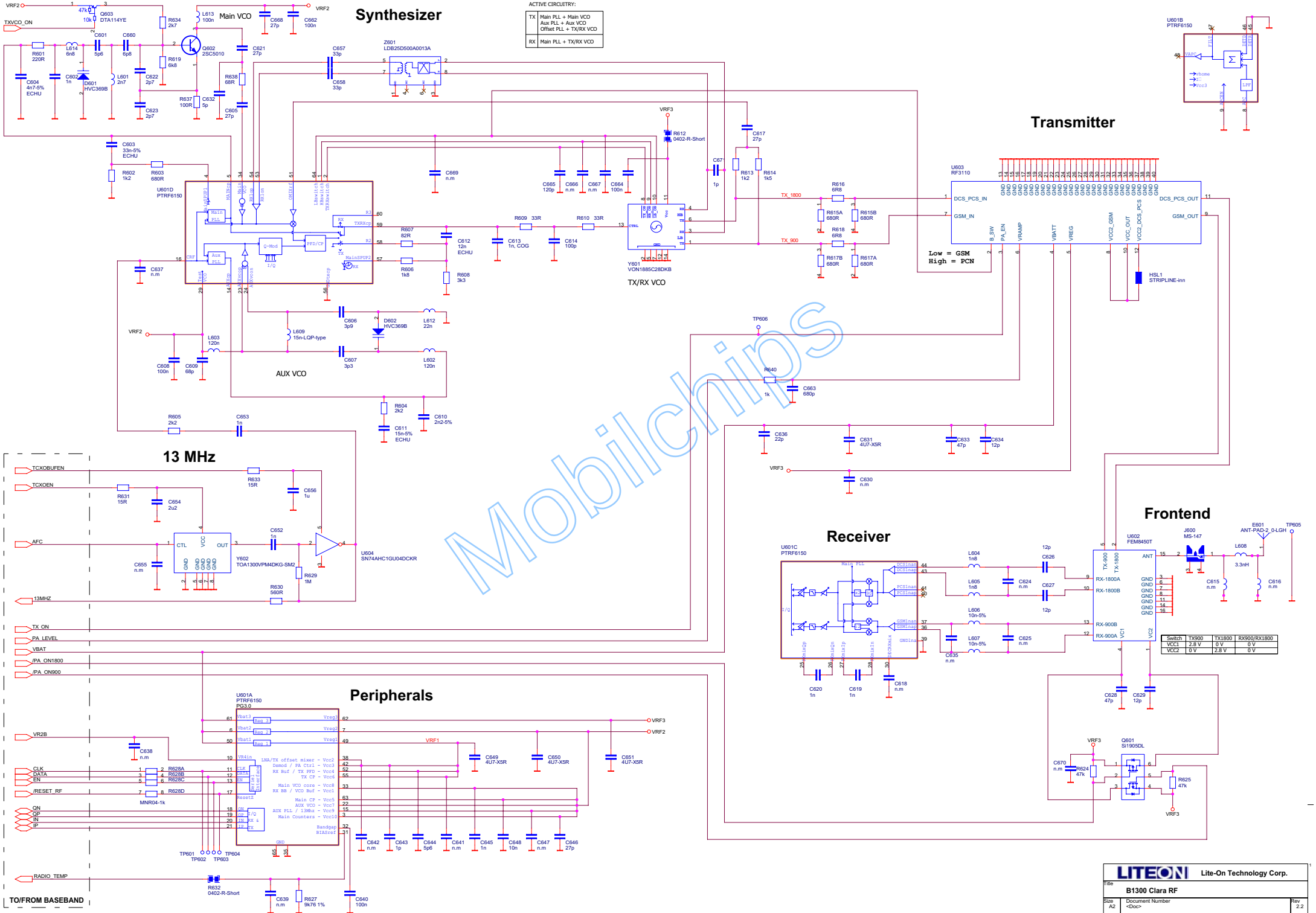
Synthesizer
Transmitter
Receiver
Frontend
13 MHz
Peripherals
Main VCO
AUX VCO
TX/RX VCO
ACTIVE CIRCUITRY:
TX Main PLL + Main VCO Aux PLL + Aux VCO Offset PLL + TX/RX VCO
RX Main PLL + TX/RX VCO
Low = GSM
High = PCN
TO/FROM BASEBAND
Mobilchips
LITEON Lite-On Technology Corp.
Title B1300 Clara RF
Size A2
Document Number <Doc>
Rev 2.2
Date: Monday, January 27, 2003
Sheet 1 of 1