Model Name: KML50 DIS
PCB NO: LA-4595PR04
BOM P/N: DA80000DR00

Half Penny Bridge 15.4
Compal Confidential

Schematic Document

Cantiga + ICH9

2009 / 02 / 17 Rev:1.0(A00)

Security Classification	Compal Secret Data		
Issued Date	2007/1/15	Deciphered Date	2008/1/15

THIS SHEET OF ENGINEERING DRAWING IS THE PROPRIETARY PROPERTY OF COMPAL ELECTRONICS, INC. AND CONTAINS CONFIDENTIAL AND TRADE SECRET INFORMATION. THIS SHEET MAY NOT BE TRANSFERED FROM THE CUSTODY OF THE COMPETENT DIVISION OF R&D DEPARTMENT EXCEPT AS AUTHORIZED BY COMPAL ELECTRONICS, INC. NEITHER THIS SHEET NOR THE INFORMATION IT CONTAINS MAY BE USED BY OR DISCLOSED TO ANY THIRD PARTY WITHOUT PRIOR WRITTEN CONSENT OF COMPAL ELECTRONICS, INC.

Compal Electronics, Inc.

Title: *Cover Sheet*

Size: Custom | Document Number: *LA-4595P* | Rev: 1.0

Date: Tuesday, February 17, 2009 | Sheet 1 of 49

Compal confidential

File Name : LA-4595P

Half Penny Bridge 15.4 DIS

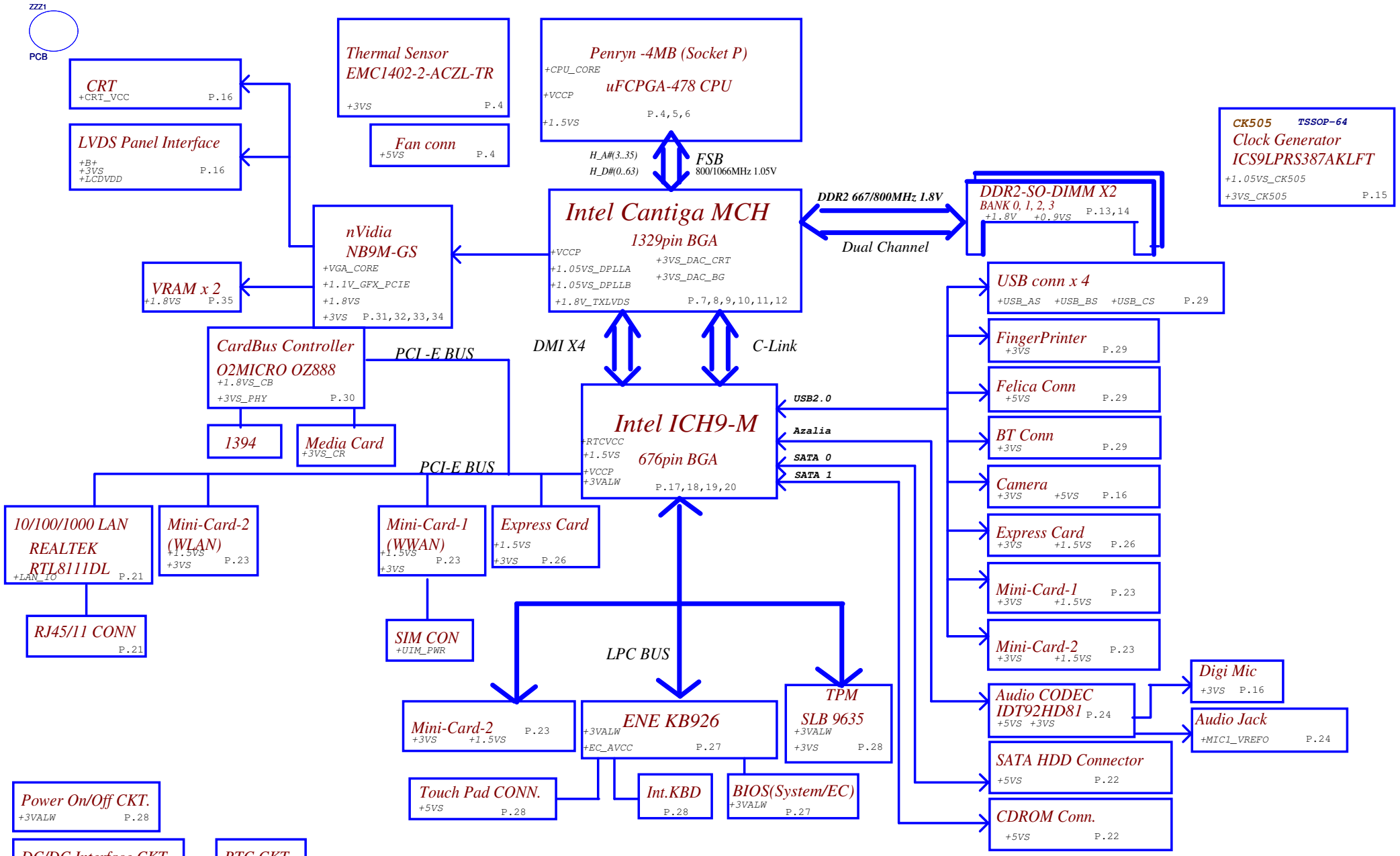

Security Classification	Compal Secret Data		
Issued Date	2007/1/15	Deciphered Date	2008/1/15

THIS SHEET OF ENGINEERING DRAWING IS THE PROPRIETARY PROPERTY OF COMPAL ELECTRONICS, INC. AND CONTAINS CONFIDENTIAL AND TRADE SECRET INFORMATION. THIS SHEET MAY NOT BE TRANSFERED FROM THE CUSTODY OF THE COMPETENT DIVISION OF R&D DEPARTMENT EXCEPT AS AUTHORIZED BY COMPAL ELECTRONICS, INC. NEITHER THIS SHEET NOR THE INFORMATION IT CONTAINS MAY BE USED BY OR DISCLOSED TO ANY THIRD PARTY WITHOUT PRIOR WRITTEN CONSENT OF COMPAL ELECTRONICS, INC.

Compal Electronics, Inc.

Title: Block diagram

Size: Custom | Document Number: LA-4595P | Rev: 1.0

Date: Tuesday, February 17, 2009 | Sheet 2 of 49

Voltage Rails

O MEANS ON X MEANS OFF

power plane / State	+B	+5VALW +3VALW	+1.8V	+5VS +3VS +1.5VS +0.9VS +VCCP +CPU_CORE +VGA_CORE +1.8VS +1.1V_GFX_PCIEP
S0	O	O	O	O
S1	O	O	O	O
S3	O	O	O	X
S5 S4/AC	O	O	X	X
S5 S4/ Battery only	O	X	X	X
S5 S4/AC & Battery don't exist	X	X	X	X

	USB PORT#	DESTINATION
ICH9-M	0	JUSBP1
	1	CAMERA
	2	JUSBP3 TOP
	3	Felica
	4	Blue Tooth
	5	Finger Printer
	6	JMINI2-WLAN
	7	Express card
	8	JUSBP3 BOT
	9	JMINI1-WWAN
	10	JUSBP4
	11	NA

Symbol Note :

: means Digital Ground

: means Analog Ground

@ : means just reserve , no build
CON@ : means ME connectors
TPM@ : means TPM function

PCI EXPRESS	DESTINATION
Lane 1	MINI CARD-1 WWAN
Lane 2	GLAN RTL8111DL
Lane 3	MINI CARD-2 WLAN
Lane 4	EXPRESS CARD
Lane 5	CARD READER OZ888
Lane 6	NA

SATA	DESTINATION
Lane 0	HDD
Lane 1	ODD
Lane 4	NA
Lane 5	NA

SMBUS Control Table

	SOURCE	INVERTER	BATT	SERIAL EEPROM	THERMAL SENSOR (CPU)	SODIMM	CLK CHIP	MINI CARD	LCD
SMB_EC_CK1 SMB_EC_DA1	KB926	X	V	V	X	X	X	X	X
SMB_EC_CK2 SMB_EC_DA2	KB926	X	X	X	V	X	X	X	X
SMB_CK_CLK1 SMB_CK_DAT1	ICH9	X	X	X	X	V	V	X	X
LCD_CLK LCD_DAT	Cantiga	X	X	X	X	X	X	X	V

I2C / SMBUS ADDRESSING

DEVICE	HEX	ADDRESS
DDR SO-DIMM 0	A0	10100000
DDR SO-DIMM 1	A4	10100100
CLOCK GENERATOR (EXT.)	D2	11010010
LED panel	58	01011000

THIS SHEET OF ENGINEERING DRAWING IS THE PROPRIETARY PROPERTY OF COMPAL ELECTRONICS, INC. AND CONTAINS CONFIDENTIAL AND TRADE SECRET INFORMATION. THIS SHEET MAY NOT BE TRANSFERED FROM THE CUSTODY OF THE COMPETENT DIVISION OF R&D DEPARTMENT EXCEPT AS AUTHORIZED BY COMPAL ELECTRONICS, INC. NEITHER THIS SHEET NOR THE INFORMATION IT CONTAINS MAY BE USED BY OR DISCLOSED TO ANY THIRD PARTY WITHOUT PRIOR WRITTEN CONSENT OF COMPAL ELECTRONICS, INC.

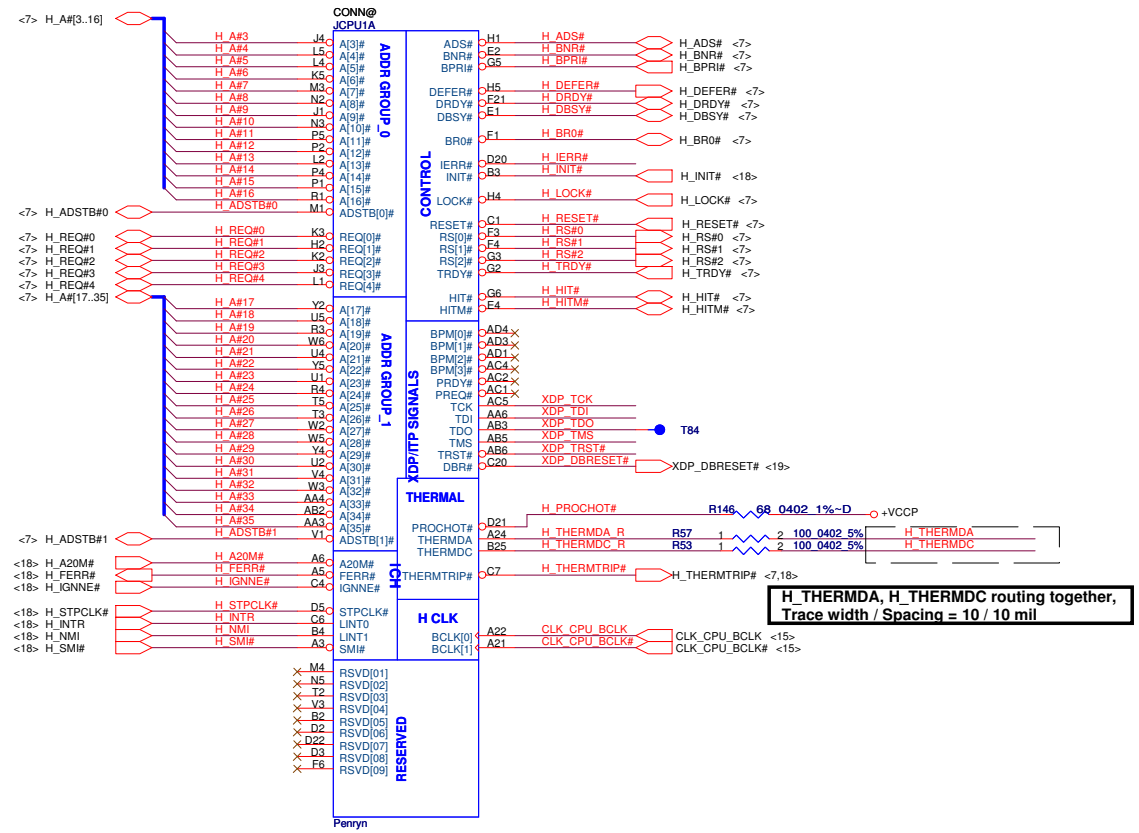

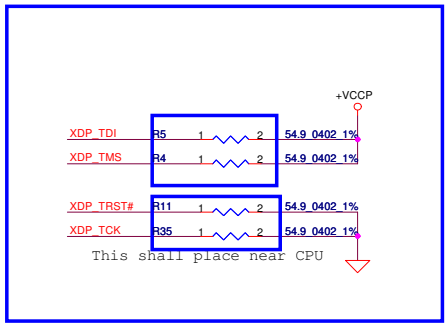

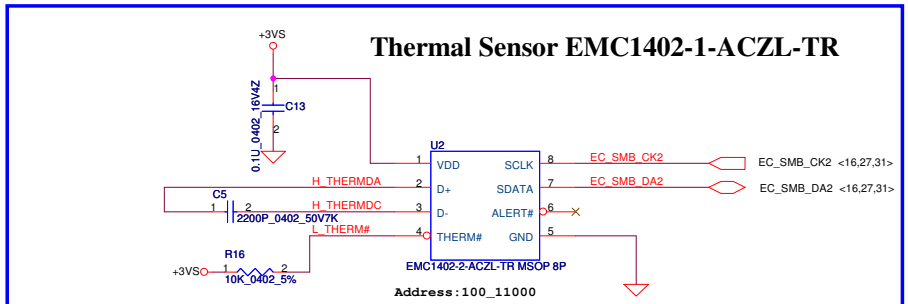

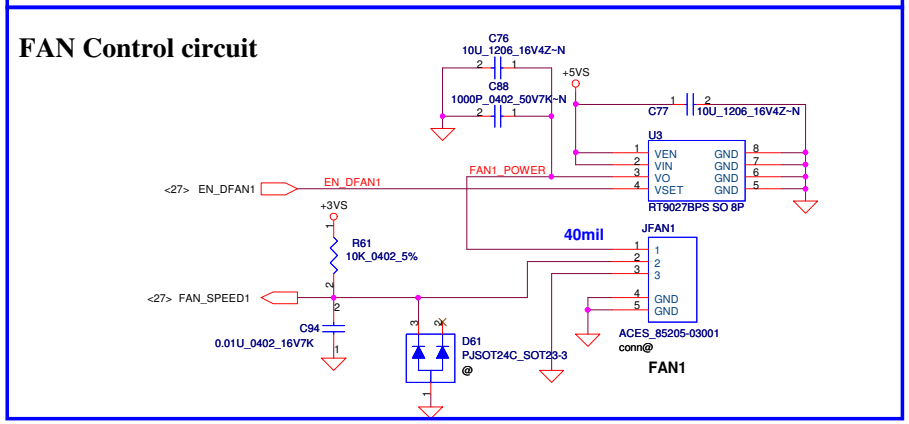

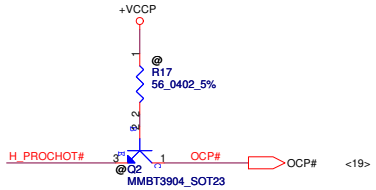

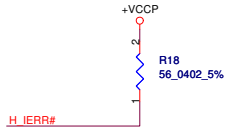

Security Classification	Compal Secret Data		
Issued Date	2006/02/13	Deciphered Date	2006/03/10

THIS SHEET OF ENGINEERING DRAWING IS THE PROPRIETARY PROPERTY OF COMPAL ELECTRONICS, INC. AND CONTAINS CONFIDENTIAL AND TRADE SECRET INFORMATION. THIS SHEET MAY NOT BE TRANSFERED FROM THE CUSTODY OF THE COMPETENT DIVISION OF R&D DEPARTMENT EXCEPT AS AUTHORIZED BY COMPAL ELECTRONICS, INC. NEITHER THIS SHEET NOR THE INFORMATION IT CONTAINS MAY BE USED BY OR DISCLOSED TO ANY THIRD PARTY WITHOUT PRIOR WRITTEN CONSENT OF COMPAL ELECTRONICS, INC.

Compal Electronics, Inc.

Title: **Penryn(1/3)-AGTL+/ITP-XDP**

Size: Custom | Document Number: LA-4595P | Rev: 1.0

Date: Tuesday, February 17, 2009 | Sheet 4 of 49

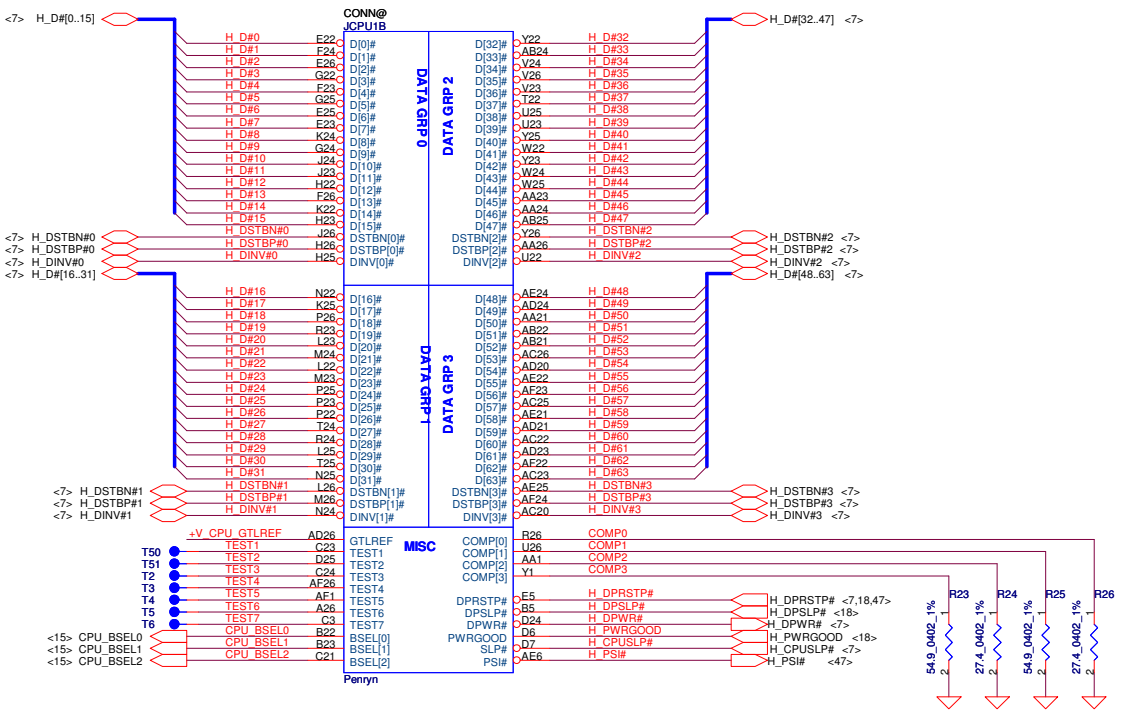

layout note: Rout H_DPRSTP# from ICH9 to IMVP6 then to GMCH & CPU

layout note: Route TEST3 & TEST5 traces on ground referenced layer to the TPs

CPU_BSEL	CPU_BSEL2	CPU_BSEL1	CPU_BSEL0
166	0	1	1
200	0	1	0
266	0	0	0

Resistor placed within 0.5" of CPU pin.Trace should be at least 25 mils away from any other toggling signal. COMP[0,2] trace width is 18 mils. COMP[1,3] trace width is 4

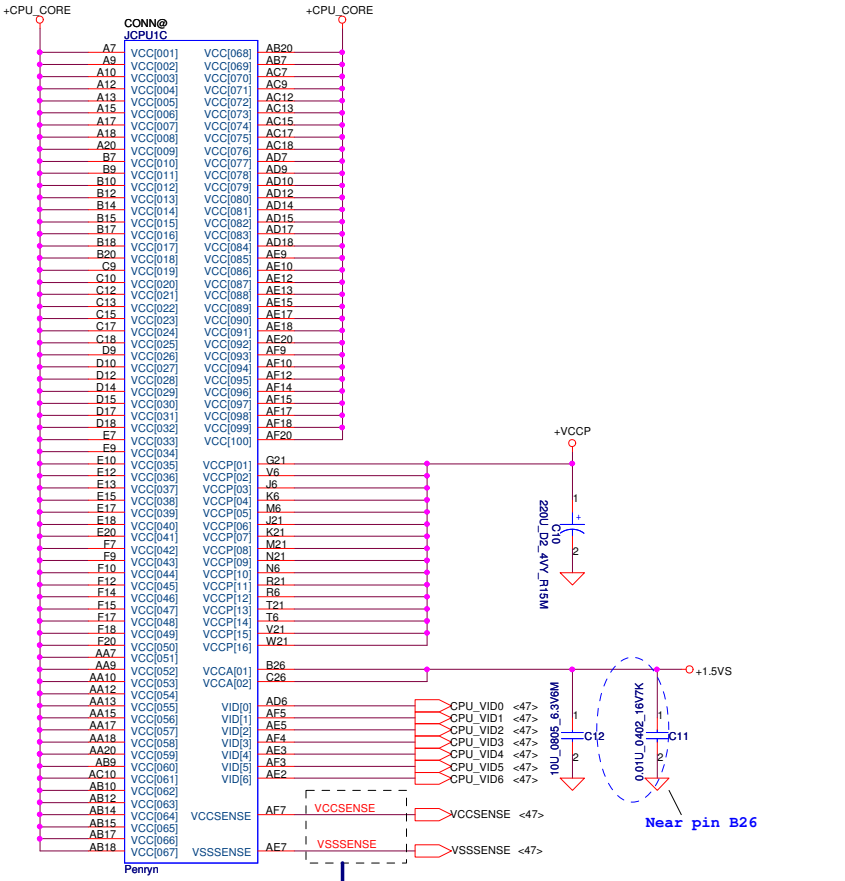

For 8 layer condition
Length match within 25 mils.Z0=27.4 ohm
The trace width/space/other is 20/7/25.

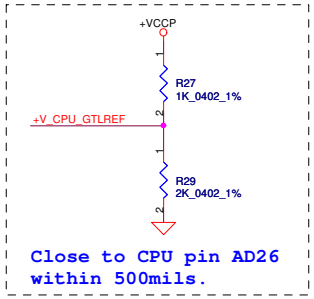

Close to CPU pin AD26 within 500mils.

Close to CPU pin within 500mils.

Security Classification	Compal Secret Data		
Issued Date	2006/02/13	Deciphered Date	2006/03/10

THIS SHEET OF ENGINEERING DRAWING IS THE PROPRIETARY PROPERTY OF COMPAL ELECTRONICS, INC. AND CONTAINS CONFIDENTIAL AND TRADE SECRET INFORMATION. THIS SHEET MAY NOT BE TRANSFERED FROM THE CUSTODY OF THE COMPETENT DIVISION OF R&D DEPARTMENT EXCEPT AS AUTHORIZED BY COMPAL ELECTRONICS, INC. NEITHER THIS SHEET NOR THE INFORMATION IT CONTAINS MAY BE USED BY OR DISCLOSED TO ANY THIRD PARTY WITHOUT PRIOR WRITTEN CONSENT OF COMPAL ELECTRONICS, INC.

Compal Electronics, Inc.

Title: Penryn(2/3)-AGTL+/ITP-XDP

Size: Custom | Document Number: LA-4595P | Rev: 1.0

Date: Tuesday, February 17, 2009 | Sheet 5 of 49

High Frequence Decoupling

10uF 0805 X5R -> 85 degree.

Security Classification	Compal Secret Data		
Issued Date	2006/02/13	Deciphered Date	2006/03/10

THIS SHEET OF ENGINEERING DRAWING IS THE PROPRIETARY PROPERTY OF COMPAL ELECTRONICS, INC. AND CONTAINS CONFIDENTIAL AND TRADE SECRET INFORMATION. THIS SHEET MAY NOT BE TRANSFERED FROM THE CUSTODY OF THE COMPETENT DIVISION OF R&D DEPARTMENT EXCEPT AS AUTHORIZED BY COMPAL ELECTRONICS, INC. NEITHER THIS SHEET NOR THE INFORMATION IT CONTAINS MAY BE USED BY OR DISCLOSED TO ANY THIRD PARTY WITHOUT PRIOR WRITTEN CONSENT OF COMPAL ELECTRONICS, INC.

Compal Electronics, Inc.

Title: **Penryn(3/3)-AGTL+/ITP-XDP**

Size: Custom | Document Number: LA-4595P | Rev: 1.0

Date: Tuesday, February 17, 2009 | Sheet 6 of 49

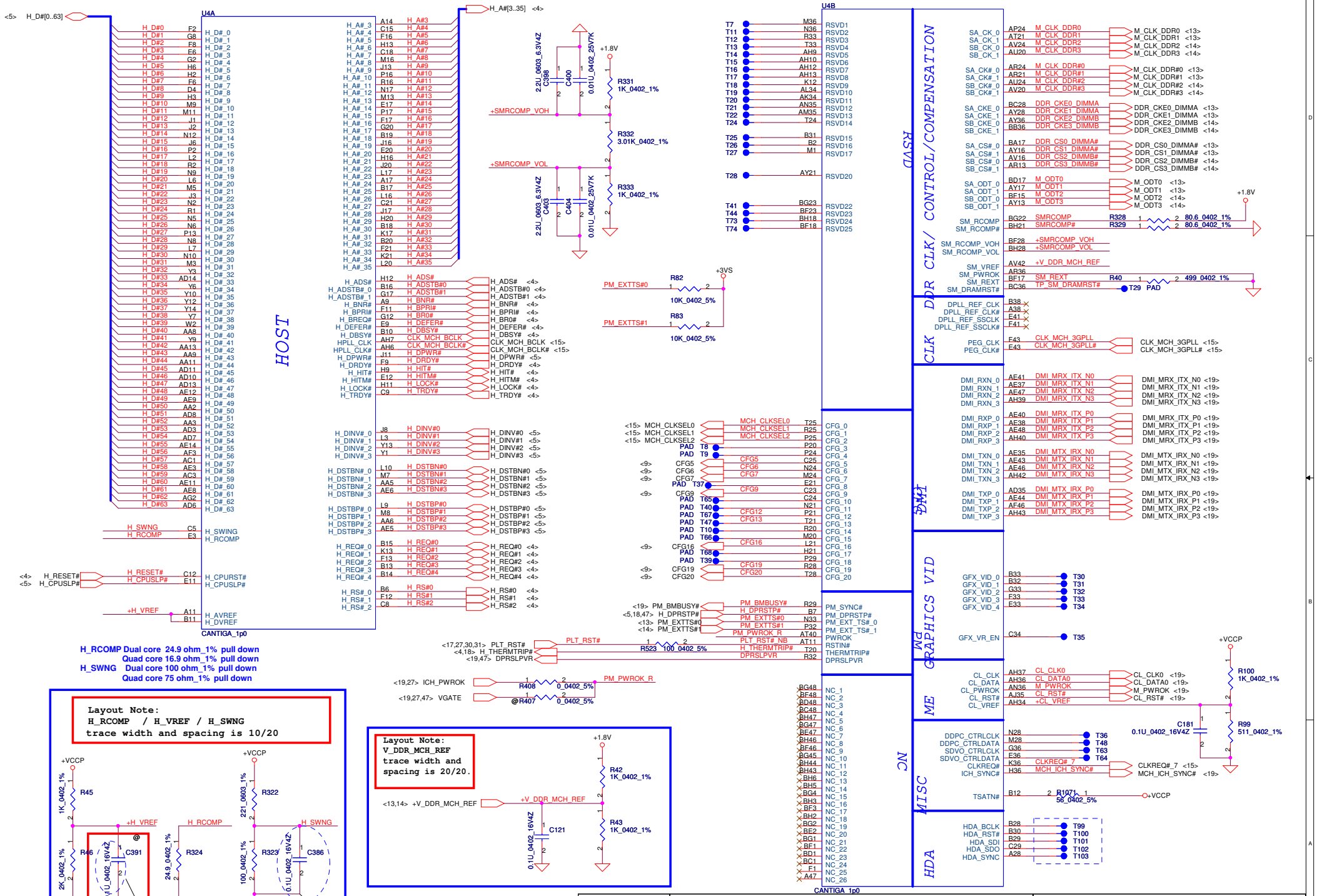

Security Classification	Compal Secret Data		
Issued Date	2008/09/24	Deciphered Date	2006/03/10

THIS SHEET OF ENGINEERING DRAWING IS THE PROPRIETARY PROPERTY OF COMPAL ELECTRONICS, INC. AND CONTAINS CONFIDENTIAL AND TRADE SECRET INFORMATION. THIS SHEET MAY NOT BE TRANSFERED FROM THE CUSTODY OF THE COMPETENT DIVISION OF R&D DEPARTMENT EXCEPT AS AUTHORIZED BY COMPAL ELECTRONICS, INC. NEITHER THIS SHEET NOR THE INFORMATION IT CONTAINS MAY BE USED BY OR DISCLOSED TO ANY THIRD PARTY WITHOUT PRIOR WRITTEN CONSENT OF COMPAL ELECTRONICS, INC.

Compal Electronics, Inc.

Title: **Cantiga(1/6)-AGTL/DMI/DDR**

Size	Document Number	Rev
Custom	LA-4595P	1.0

Date: Tuesday, February 17, 2009 | Sheet 7 of 49

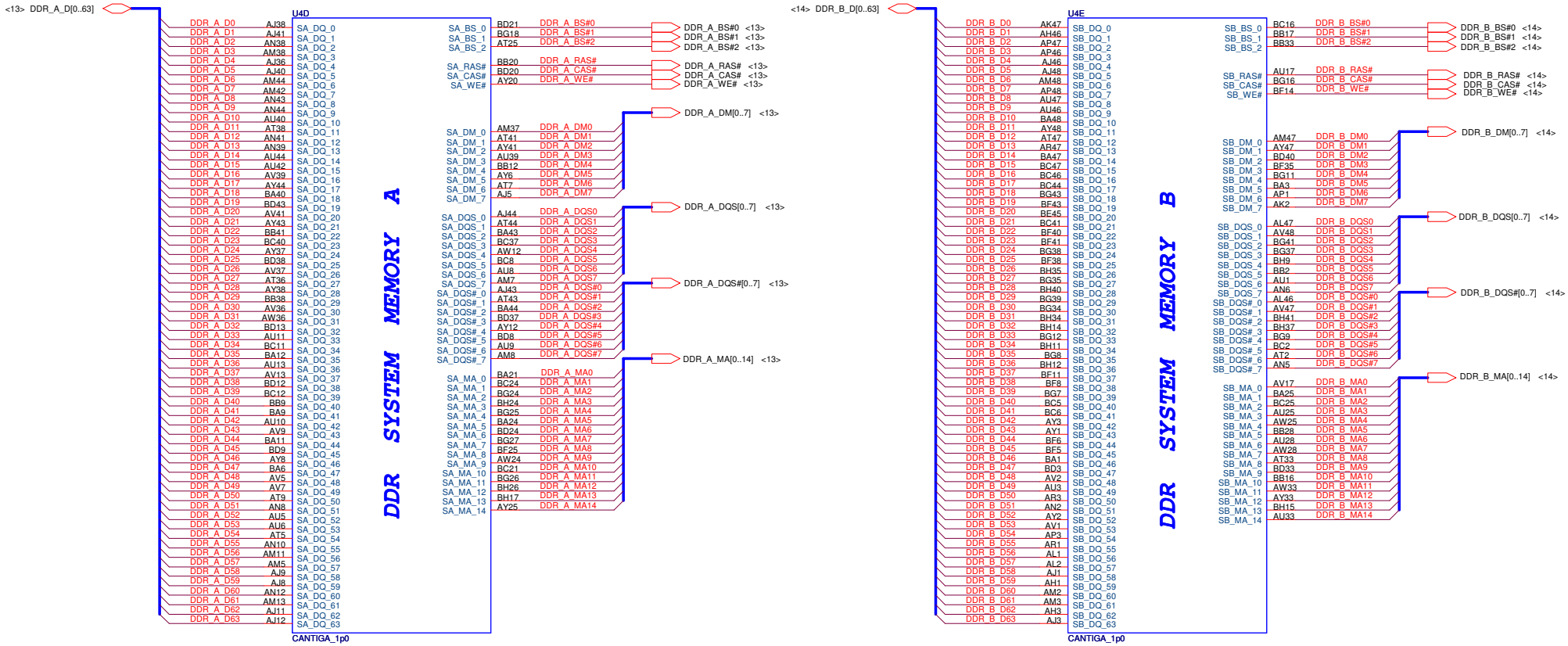

Security Classification	Compal Secret Data		
Issued Date	2006/02/13	Deciphered Date	2006/03/10

THIS SHEET OF ENGINEERING DRAWING IS THE PROPRIETARY PROPERTY OF COMPAL ELECTRONICS, INC. AND CONTAINS CONFIDENTIAL AND TRADE SECRET INFORMATION. THIS SHEET MAY NOT BE TRANSFERRED FROM THE CUSTODY OF THE COMPETENT DIVISION OF R&D DEPARTMENT EXCEPT AS AUTHORIZED BY COMPAL ELECTRONICS, INC. NEITHER THIS SHEET NOR THE INFORMATION IT CONTAINS MAY BE USED BY OR DISCLOSED TO ANY THIRD PARTY WITHOUT PRIOR WRITTEN CONSENT OF COMPAL ELECTRONICS, INC.

Compal Electronics, Inc.

Title: **Cantiga(2/6)-DDR2 A/B CH**

Size: Custom | Document Number: LA-4595P | Rev: 1.0

Date: Tuesday, February 17, 2009 | Sheet 8 of 49

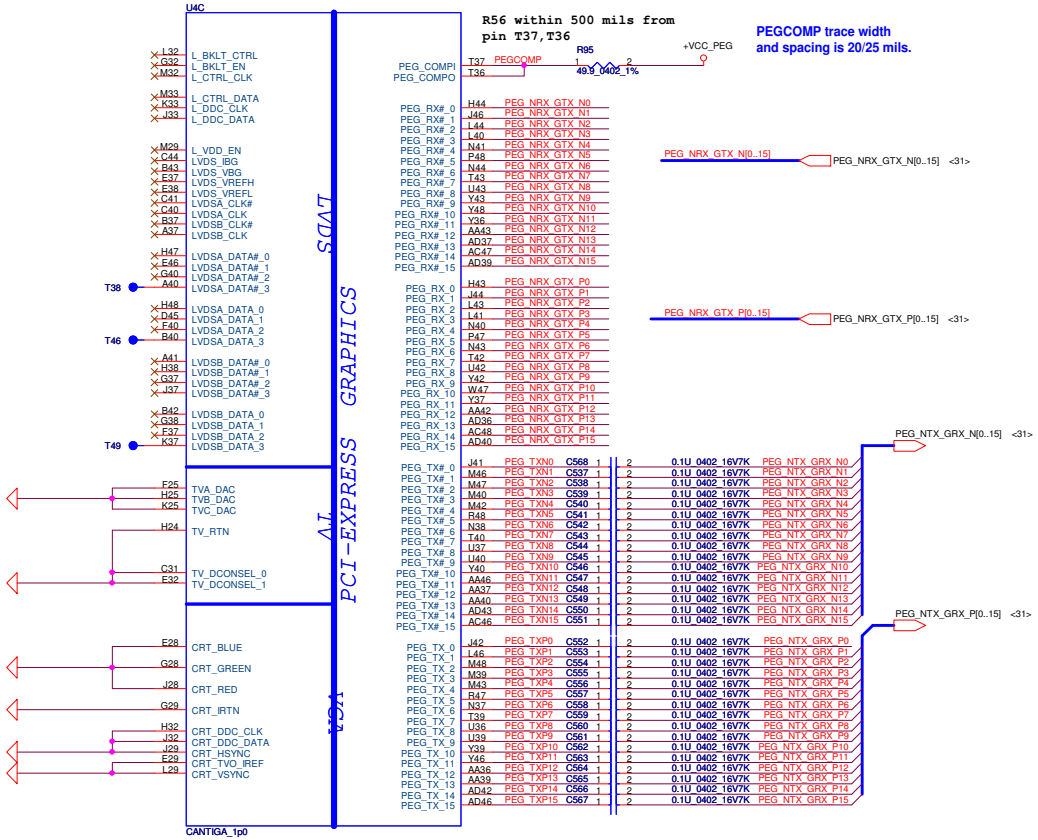

Strap Pin Table

CFG[2:0] FSB Freq select	000 = FSB 1066MHz 010 = FSB 800MHz 011 = FSB 667MHz Others = Reserved
CFG[4:3]	Reserved
CFG5 (DMI select)	0 = DMI x 2 1 = DMI x 4 *
CFG6	0 = The iTPM Host Interface is enable * 1 = The iTPM Host Interface is disable
CFG7 (Intel Management Engine Crypto strap)	0 =(TLS)chiper suite with no confidentiality 1 =(TLS)chiper suite with confidentiality *
CFG8	Reserved
CFG9 (PCIE Graphics Lane Reversal)	0 = Reverse Lane,15->0, 14->1 1 = Normal Operation,Lane Number in order *
CFG10 (PCIE Lookback enable)	0 = Enable 1 = Disable *
CFG11	Reserved
CFG[13:12] (XOR/ALLZ)	00 = Reserved 01 = XOR Mode Enabled 10 = All Z Mode Enabled 11 = Normal Operation(Default) *
CFG[15:14]	Reserved
CFG16 (FSB Dynamic ODT)	0 = Disabled 1 = Enabled *
CFG[18:17]	Reserved
CFG19 (DMI Lane Reversal)	0 = Normal Operation * (Lane number in Order) 1 = Reverse Lane
CFG20 (PCIE/SDVO concurrent)	0 = Only PCIE or SDVO is operational. * 1 = PCIE/SDVO are operating simu.

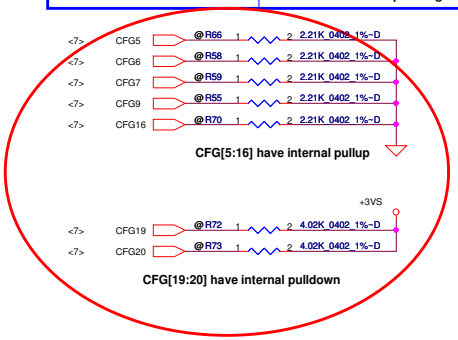

Security Classification	Compal Secret Data		
Issued Date	2006/02/13	Deciphered Date	2006/03/10

THIS SHEET OF ENGINEERING DRAWING IS THE PROPRIETARY PROPERTY OF COMPAL ELECTRONICS, INC. AND CONTAINS CONFIDENTIAL AND TRADE SECRET INFORMATION. THIS SHEET MAY NOT BE TRANSFERED FROM THE CUSTODY OF THE COMPETENT DIVISION OF R&D DEPARTMENT EXCEPT AS AUTHORIZED BY COMPAL ELECTRONICS, INC. NEITHER THIS SHEET NOR THE INFORMATION IT CONTAINS MAY BE USED BY OR DISCLOSED TO ANY THIRD PARTY WITHOUT PRIOR WRITTEN CONSENT OF COMPAL ELECTRONICS, INC.

Compal Electronics, Inc.

Title: Cantiga(3/6)-VGA/LVDS/TV

Size: Custom | Document Number: LA-4595P | Rev: 1.0

Date: Tuesday, February 17, 2009 | Sheet 9 of 49

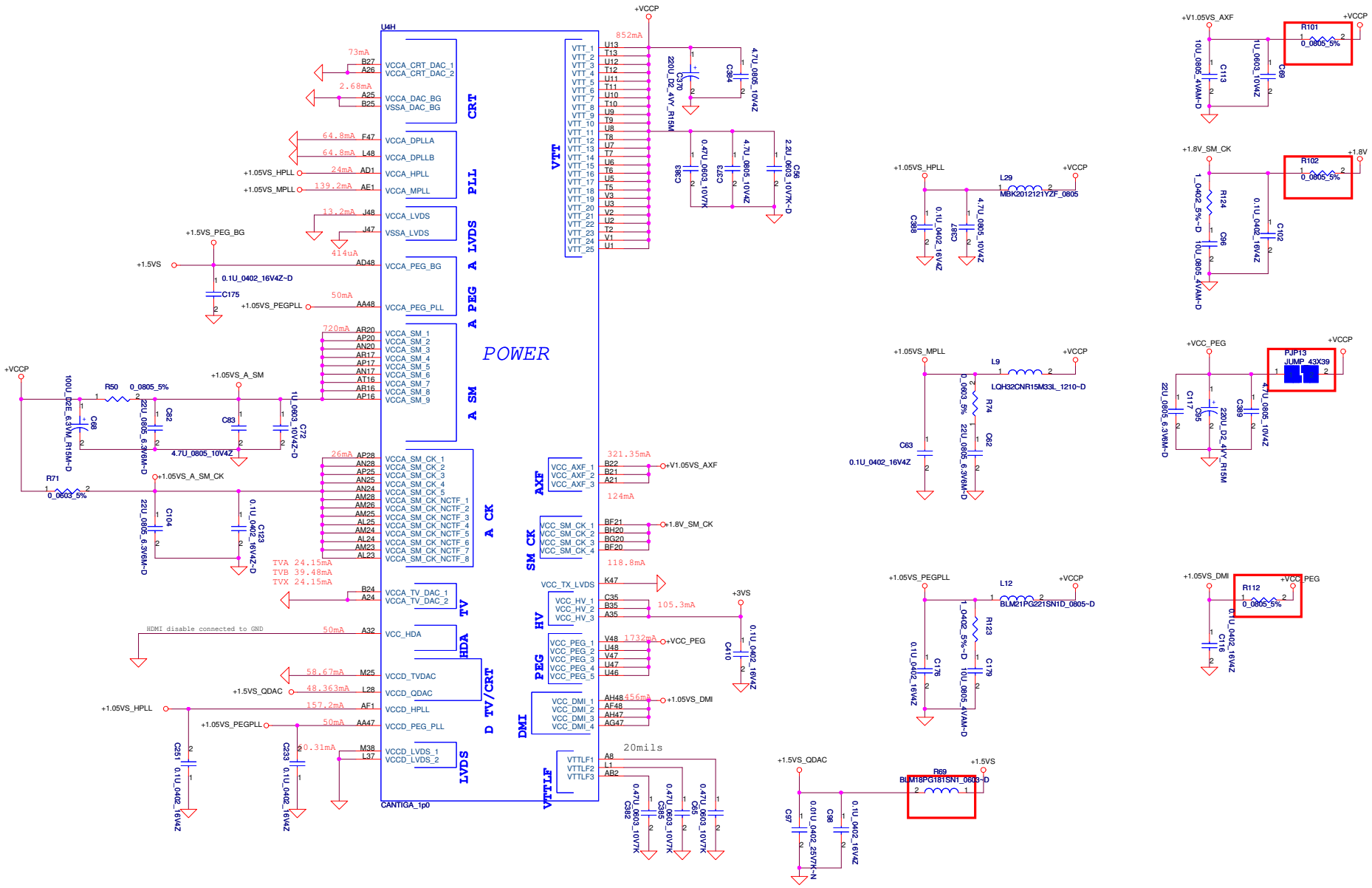

Security Classification	Compal Secret Data		
Issued Date	2006/02/13	Deciphered Date	2006/03/10

THIS SHEET OF ENGINEERING DRAWING IS THE PROPRIETARY PROPERTY OF COMPAL ELECTRONICS, INC. AND CONTAINS CONFIDENTIAL AND TRADE SECRET INFORMATION. THIS SHEET MAY NOT BE TRANSFERED FROM THE CUSTODY OF THE COMPETENT DIVISION OF R&D DEPARTMENT EXCEPT AS AUTHORIZED BY COMPAL ELECTRONICS, INC. NEITHER THIS SHEET NOR THE INFORMATION IT CONTAINS MAY BE USED BY OR DISCLOSED TO ANY THIRD PARTY WITHOUT PRIOR WRITTEN CONSENT OF COMPAL ELECTRONICS, INC.

Compal Electronics, Inc.

Title: **Cantiga(4/6)-PWR**

Size: Custom | Document Number: LA-4595P | Rev: 1.0

Date: Tuesday, February 17, 2009 | Sheet 10 of 49

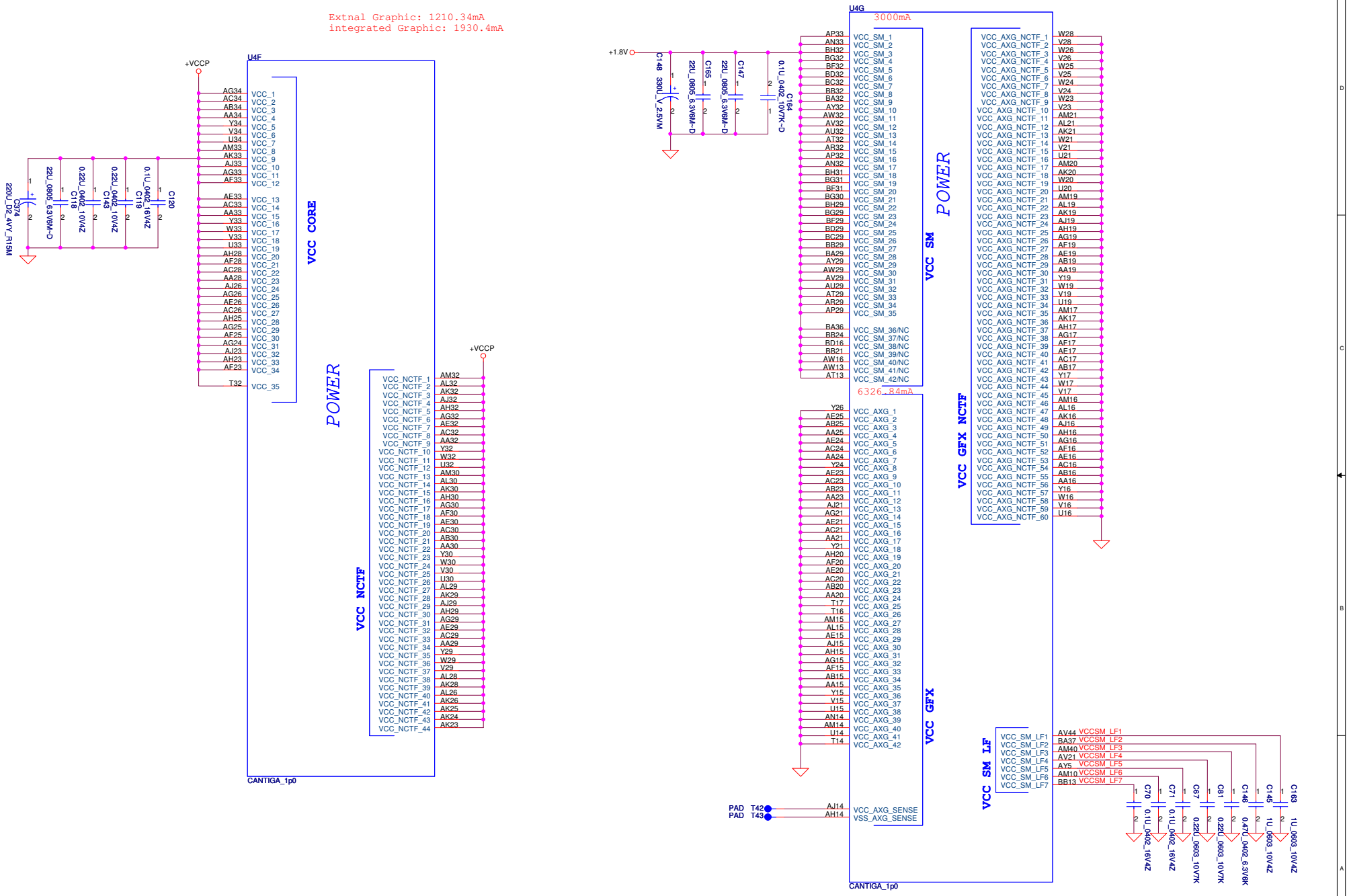

Security Classification	Compal Secret Data		
Issued Date	2006/02/13	Deciphered Date	2006/03/10

THIS SHEET OF ENGINEERING DRAWING IS THE PROPRIETARY PROPERTY OF COMPAL ELECTRONICS, INC. AND CONTAINS CONFIDENTIAL AND TRADE SECRET INFORMATION. THIS SHEET MAY NOT BE TRANSFERED FROM THE CUSTODY OF THE COMPETENT DIVISION OF R&D DEPARTMENT EXCEPT AS AUTHORIZED BY COMPAL ELECTRONICS, INC. NEITHER THIS SHEET NOR THE INFORMATION IT CONTAINS MAY BE USED BY OR DISCLOSED TO ANY THIRD PARTY WITHOUT PRIOR WRITTEN CONSENT OF COMPAL ELECTRONICS, INC.

Compal Electronics, Inc.

Title: **Cantiga(5/6)-PWR/GND**

Size: Custom | Document Number: LA-4595P | Rev: 1.0

Date: Tuesday, February 17, 2009 | Sheet 11 of 49

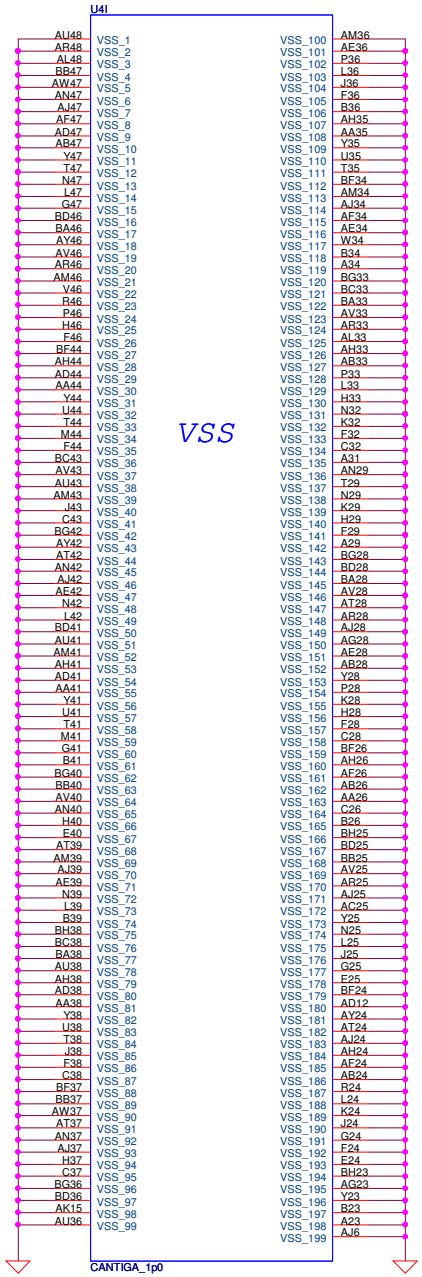

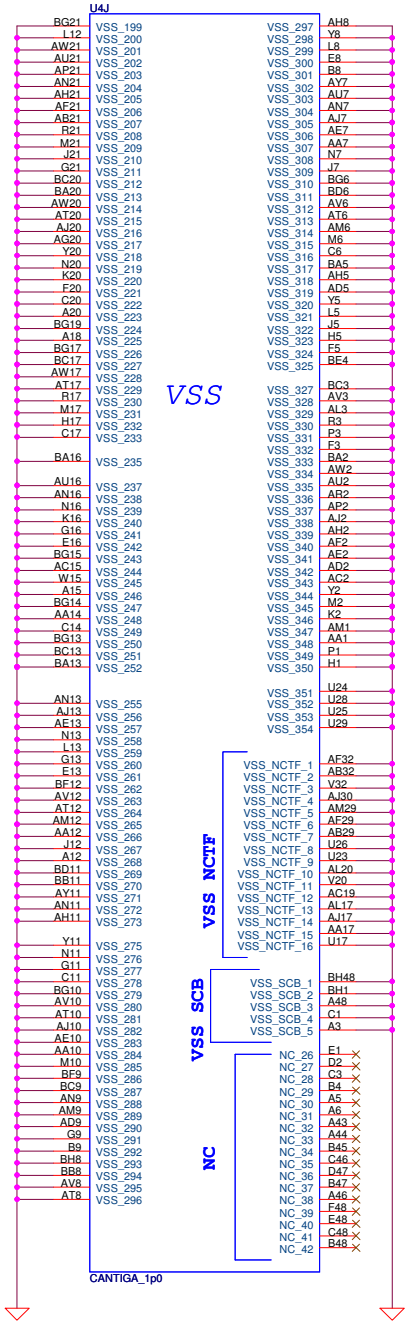

Security Classification	Compal Secret Data		
Issued Date	2006/02/13	Deciphered Date	2006/03/10

THIS SHEET OF ENGINEERING DRAWING IS THE PROPRIETARY PROPERTY OF COMPAL ELECTRONICS, INC. AND CONTAINS CONFIDENTIAL AND TRADE SECRET INFORMATION. THIS SHEET MAY NOT BE TRANSFERED FROM THE CUSTODY OF THE COMPETENT DIVISION OF R&D DEPARTMENT EXCEPT AS AUTHORIZED BY COMPAL ELECTRONICS, INC. NEITHER THIS SHEET NOR THE INFORMATION IT CONTAINS MAY BE USED BY OR DISCLOSED TO ANY THIRD PARTY WITHOUT PRIOR WRITTEN CONSENT OF COMPAL ELECTRONICS, INC.

Compal Electronics, Inc.

Title: **Cantiga(6/6)-PWR/GND**

Size: Custom | Document Number: LA-4595P | Rev: 1.0

Date: Tuesday, February 17, 2009 | Sheet 12 of 49

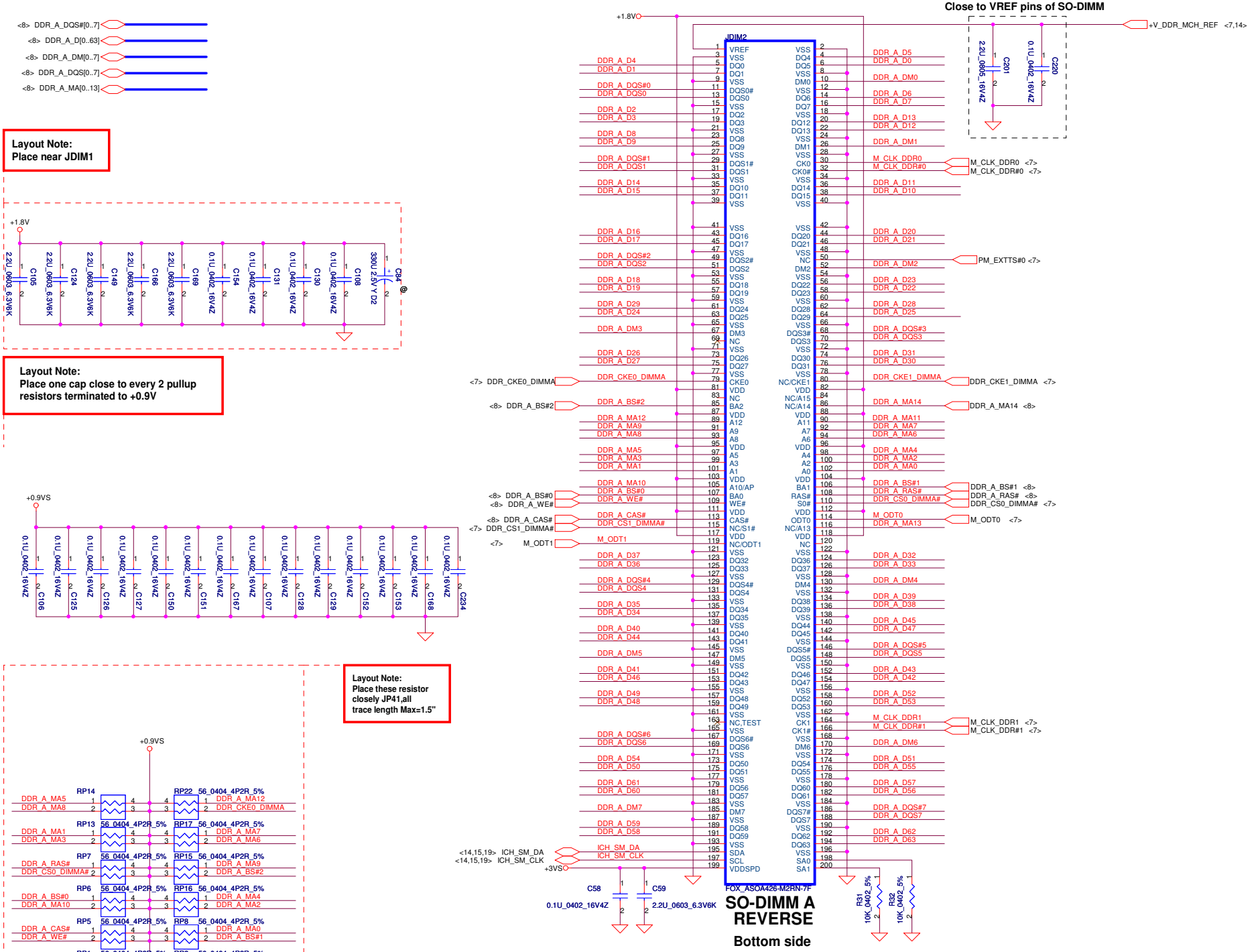

Security Classification	Compal Secret Data		
Issued Date	2007/1/15	Deciphered Date	2008/1/15

THIS SHEET OF ENGINEERING DRAWING IS THE PROPRIETARY PROPERTY OF COMPAL ELECTRONICS, INC. AND CONTAINS CONFIDENTIAL AND TRADE SECRET INFORMATION. THIS SHEET MAY NOT BE TRANSFERED FROM THE CUSTODY OF THE COMPETENT DIVISION OF R&D DEPARTMENT EXCEPT AS AUTHORIZED BY COMPAL ELECTRONICS, INC. NEITHER THIS SHEET NOR THE INFORMATION IT CONTAINS MAY BE USED BY OR DISCLOSED TO ANY THIRD PARTY WITHOUT PRIOR WRITTEN CONSENT OF COMPAL ELECTRONICS, INC.

Compal Electronics, Inc.

Title: **DDR2 SO-DIMM I**

Size	Document Number	Rev
Custom	LA-4595P	1.0

Date: Tuesday, February 17, 2009 | Sheet 13 of 49

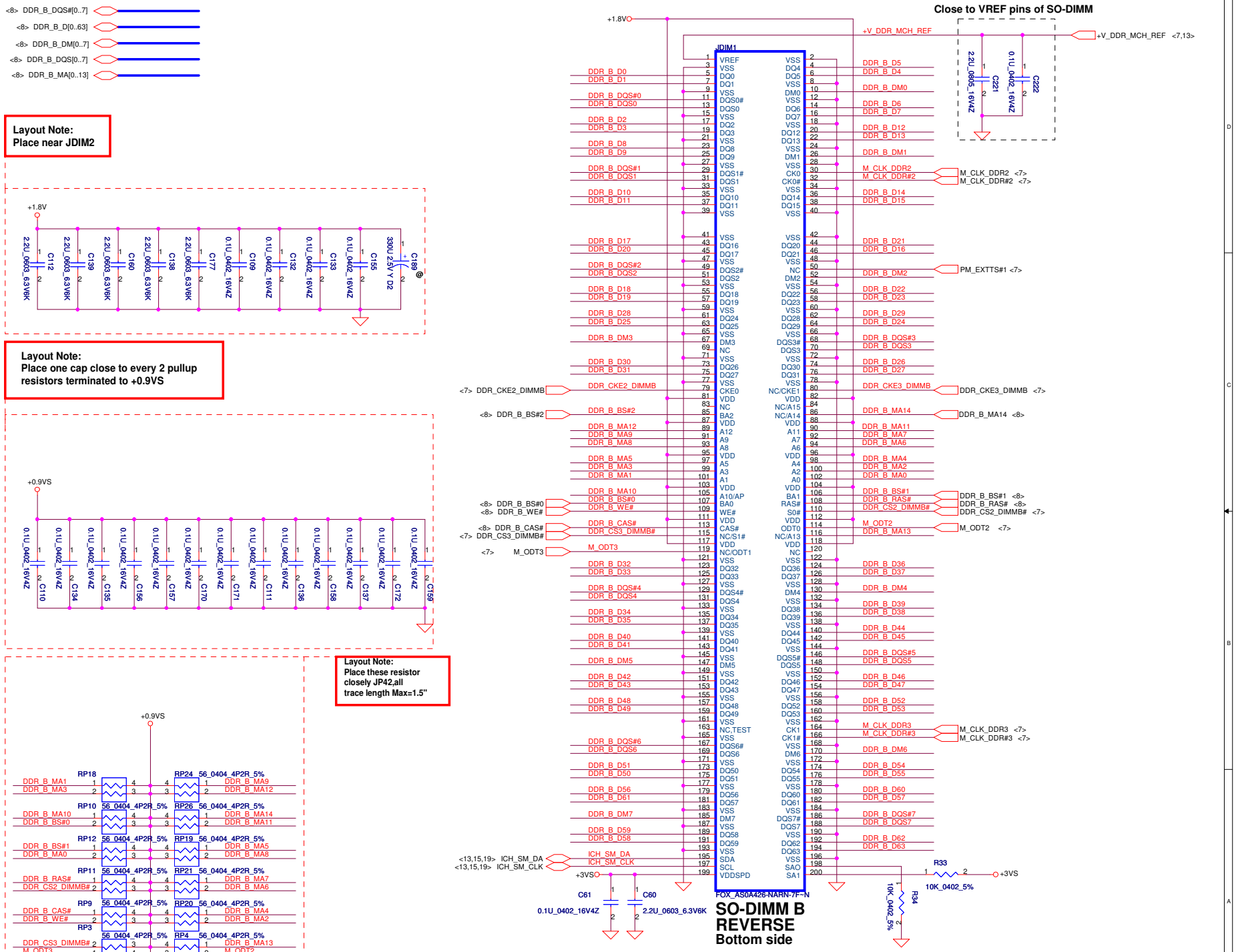

Security Classification	Compal Secret Data		
Issued Date	2007/1/15	Deciphered Date	2008/1/15

THIS SHEET OF ENGINEERING DRAWING IS THE PROPRIETARY PROPERTY OF COMPAL ELECTRONICS, INC. AND CONTAINS CONFIDENTIAL AND TRADE SECRET INFORMATION. THIS SHEET MAY NOT BE TRANSFERED FROM THE CUSTODY OF THE COMPETENT DIVISION OF R&D DEPARTMENT EXCEPT AS AUTHORIZED BY COMPAL ELECTRONICS, INC. NEITHER THIS SHEET NOR THE INFORMATION IT CONTAINS MAY BE USED BY OR DISCLOSED TO ANY THIRD PARTY WITHOUT PRIOR WRITTEN CONSENT OF COMPAL ELECTRONICS, INC.

Compal Electronics, Inc.

Title: ***DDR2 SO-DIMM II***

Size	Document Number	Rev
Custom	LA-4595P	1.0

Date: Tuesday, February 17, 2009 | Sheet 14 of 49

FSC CLKSEL2	FSB CLKSEL1	FSA CLKSEL0	CPU MHz	SRC MHz	PCI MHz	REF MHz	DOT_96 MHz	USB MHz	
0	0	0	266	100	33.3	14.318	96.0	48.0	*
0	0	1	133	100	33.3	14.318	96.0	48.0	
0	1	0	200	100	33.3	14.318	96.0	48.0	
0	1	1	166	100	33.3	14.318	96.0	48.0	
1	0	0	333	100	33.3	14.318	96.0	48.0	
1	0	1	100	100	33.3	14.318	96.0	48.0	
1	1	0	400	100	33.3	14.318	96.0	48.0	
1	1	1	Reserved						

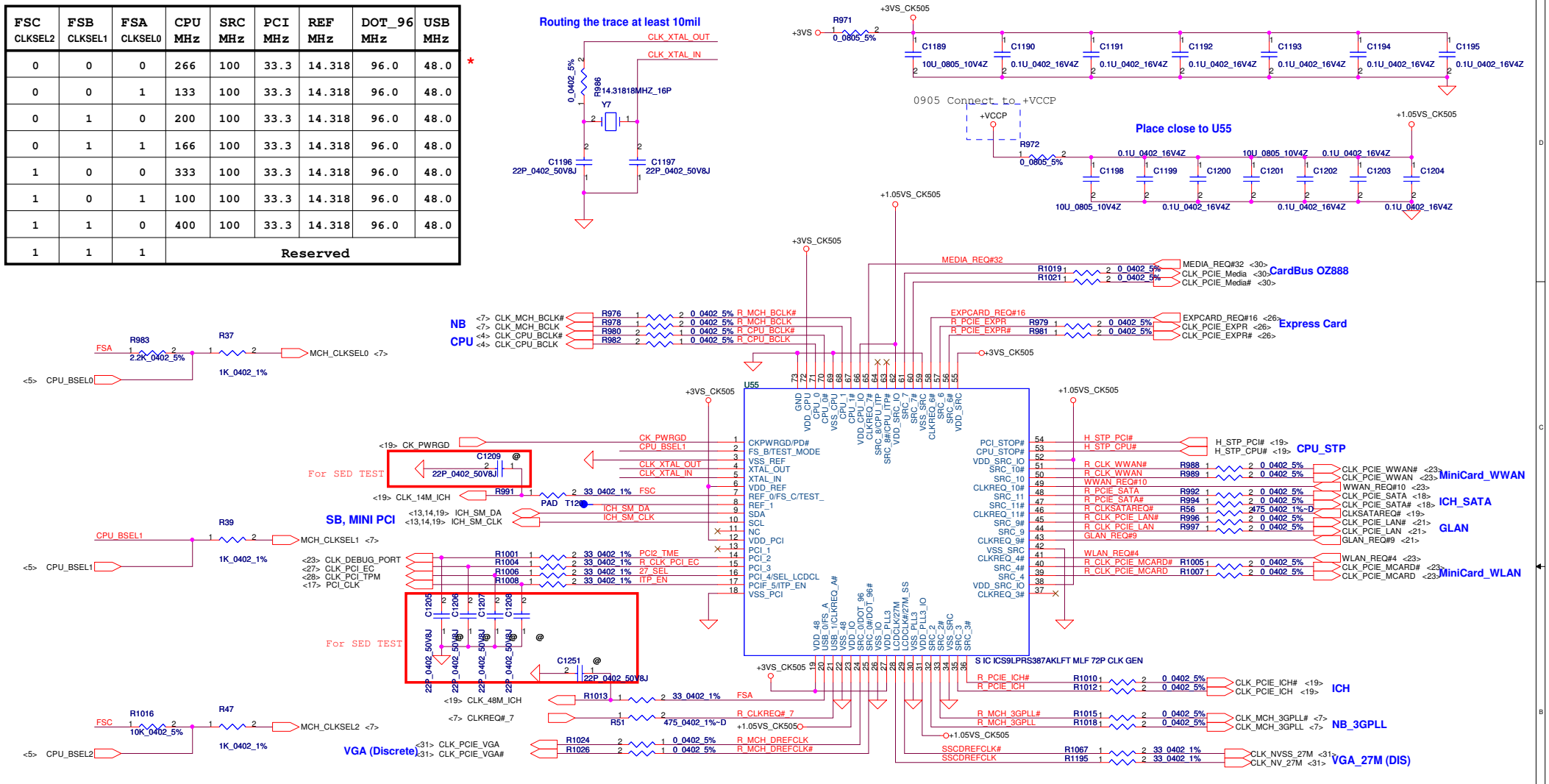

ITP_EN	*0 = SRC8/SRC8# 1 = ITP/ITP#
27_SEL	0 = Enable DOT96 & SRC1(UMA) *1 = Enable SRC0 & 27MHz(DIS)
PCI2_TME	0 = Overclocking of CPU and SRC Allowed *1 = Overclocking of CPU and SRC NOT allowed

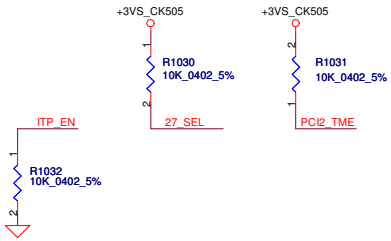

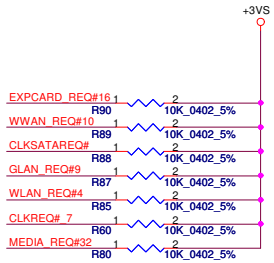

Security Classification	Compal Secret Data		
Issued Date	2006/02/13	Deciphered Date	2006/03/10

THIS SHEET OF ENGINEERING DRAWING IS THE PROPRIETARY PROPERTY OF COMPAL ELECTRONICS, INC. AND CONTAINS CONFIDENTIAL AND TRADE SECRET INFORMATION. THIS SHEET MAY NOT BE TRANSFERED FROM THE CUSTODY OF THE COMPETENT DIVISION OF R&D DEPARTMENT EXCEPT AS AUTHORIZED BY COMPAL ELECTRONICS, INC. NEITHER THIS SHEET NOR THE INFORMATION IT CONTAINS MAY BE USED BY OR DISCLOSED TO ANY THIRD PARTY WITHOUT PRIOR WRITTEN CONSENT OF COMPAL ELECTRONICS, INC.

Compal Electronics, Inc.

Title: Clock Generator CK505

Size: | Document Number: LA-4595P | Rev: 1.0

Date: Tuesday, February 17, 2009 | Sheet 15 of 49

CRT

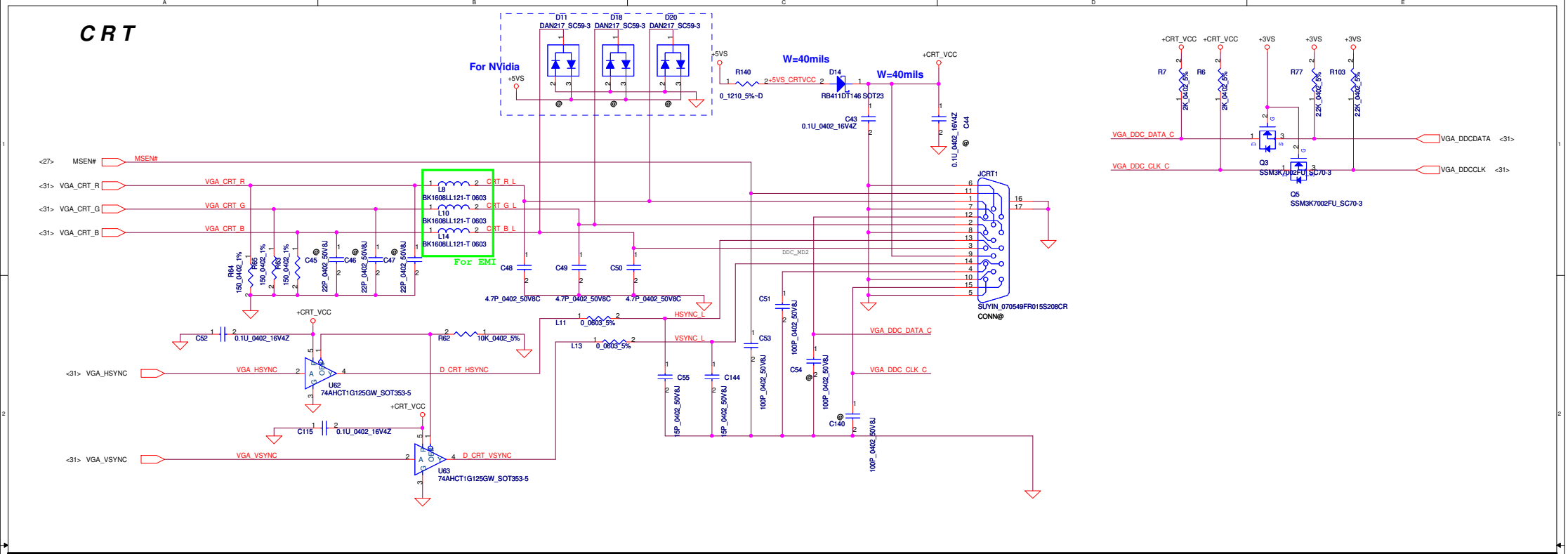

LCD

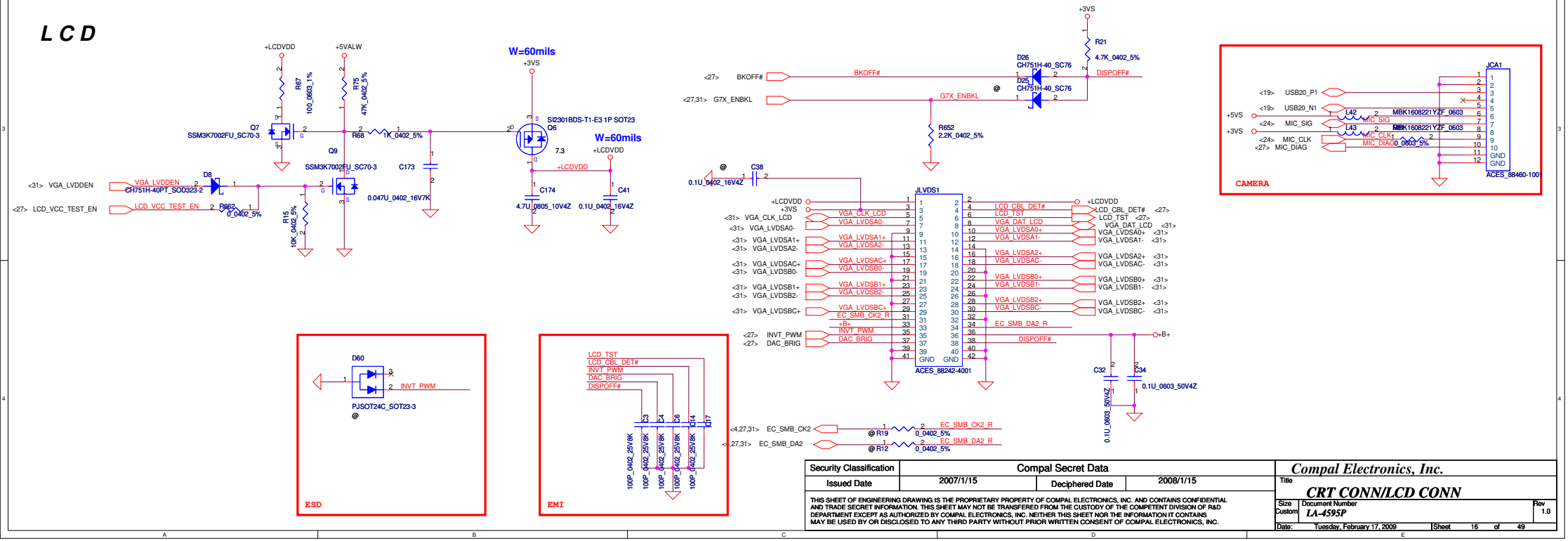

Security Classification	Compal Secret Data		
Issued Date	2007/1/15	Deciphered Date	2008/1/15

THIS SHEET OF ENGINEERING DRAWING IS THE PROPRIETARY PROPERTY OF COMPAL ELECTRONICS, INC. AND CONTAINS CONFIDENTIAL AND TRADE SECRET INFORMATION. THIS SHEET MAY NOT BE TRANSFERED FROM THE CUSTODY OF THE COMPETENT DIVISION OF R&D DEPARTMENT EXCEPT AS AUTHORIZED BY COMPAL ELECTRONICS, INC. NEITHER THIS SHEET NOR THE INFORMATION IT CONTAINS MAY BE USED BY OR DISCLOSED TO ANY THIRD PARTY WITHOUT PRIOR WRITTEN CONSENT OF COMPAL ELECTRONICS, INC.

Compal Electronics, Inc.

Title: CRT CONN/LCD CONN

Size	Document Number	Rev
Custom	LA-4595P	1.0

Date: Tuesday, February 17, 2009 | Sheet 16 of 49

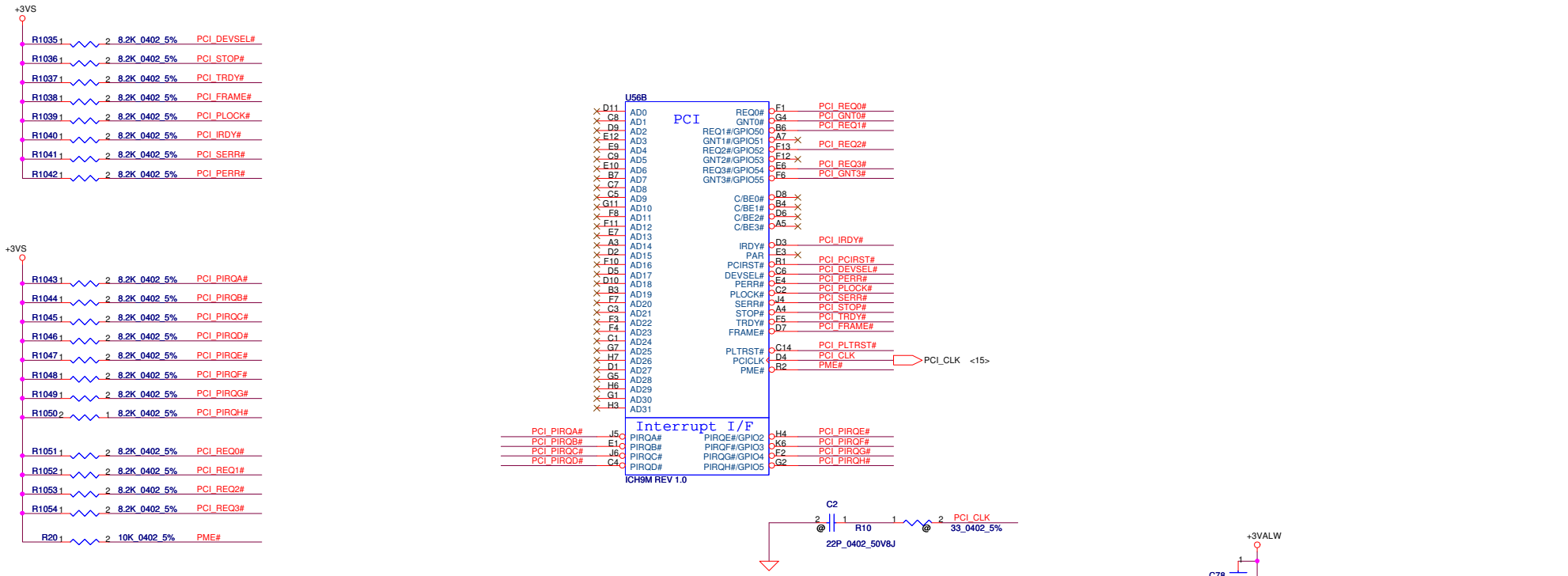

A16 swap override Strap	
PCI_GNT3#	Low= A16 swap override Enble High= Default*

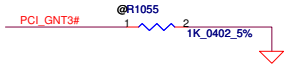

Boot BIOS Strap		
PCI_GNT0#	SPI_CS#1	Boot BIOS Location
0	1	SPI
1	0	PCI
1	1	LPC *

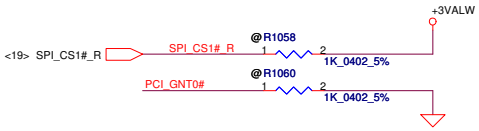

Security Classification	Compal Secret Data		
Issued Date	2006/02/13	Deciphered Date	2006/03/10

THIS SHEET OF ENGINEERING DRAWING IS THE PROPRIETARY PROPERTY OF COMPAL ELECTRONICS, INC. AND CONTAINS CONFIDENTIAL AND TRADE SECRET INFORMATION. THIS SHEET MAY NOT BE TRANSFERED FROM THE CUSTODY OF THE COMPETENT DIVISION OF R&D DEPARTMENT EXCEPT AS AUTHORIZED BY COMPAL ELECTRONICS, INC. NEITHER THIS SHEET NOR THE INFORMATION IT CONTAINS MAY BE USED BY OR DISCLOSED TO ANY THIRD PARTY WITHOUT PRIOR WRITTEN CONSENT OF COMPAL ELECTRONICS, INC.

Compal Electronics, Inc.

Title: **ICH9(1/4)-PCI/INT**

Size | Document Number: LA-4595P | Rev 1.0

Date: Tuesday, February 17, 2009 | Sheet 17 of 49

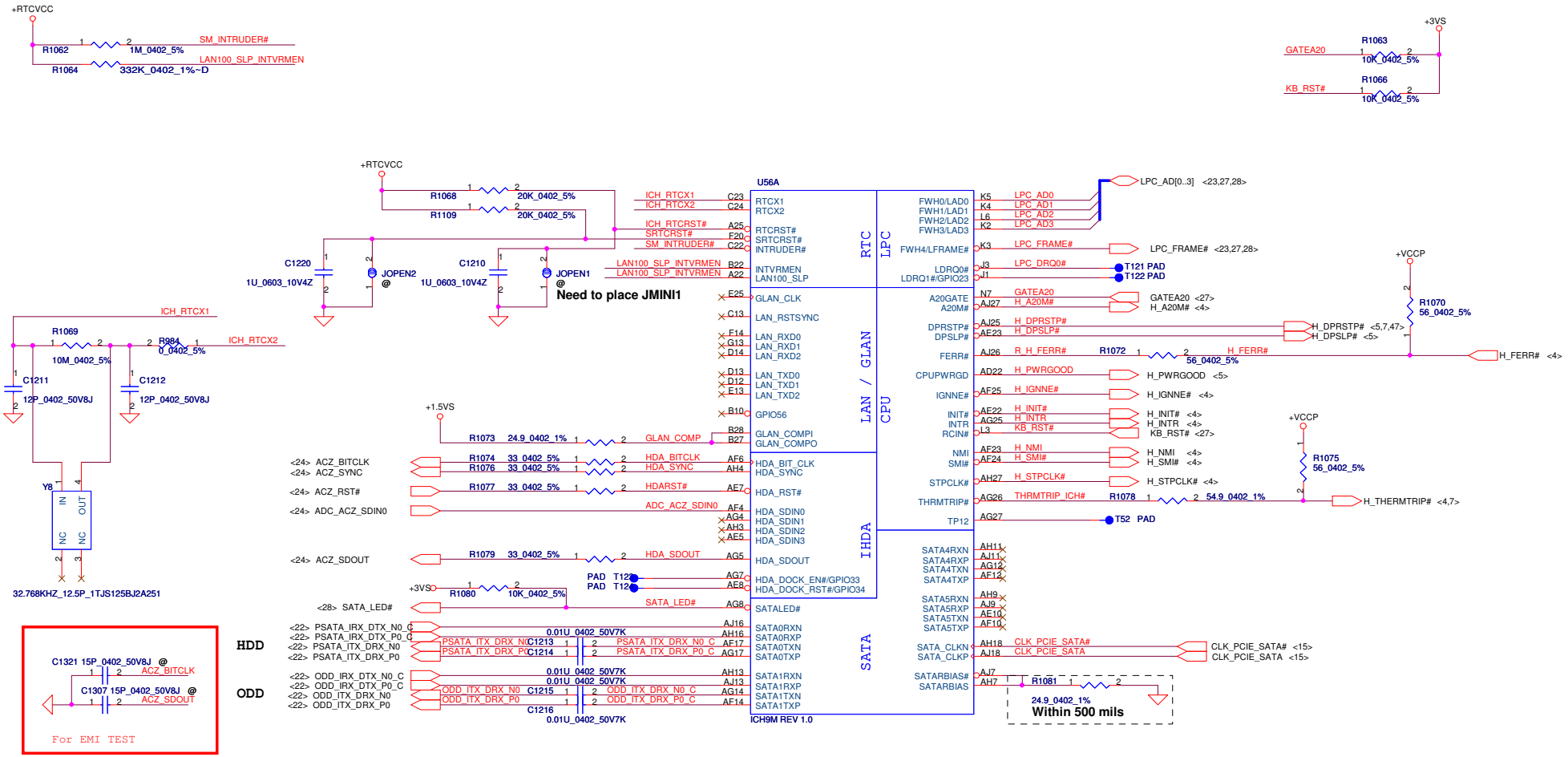

XOR CHAIN ENTRANCE STRAP:RSVD

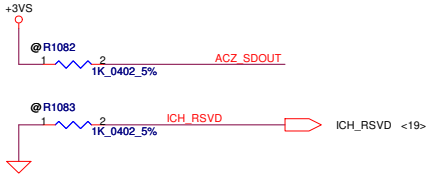

Security Classification	Compal Secret Data		
Issued Date	2006/02/13	Deciphered Date	2006/03/10

THIS SHEET OF ENGINEERING DRAWING IS THE PROPRIETARY PROPERTY OF COMPAL ELECTRONICS, INC. AND CONTAINS CONFIDENTIAL AND TRADE SECRET INFORMATION. THIS SHEET MAY NOT BE TRANSFERED FROM THE CUSTODY OF THE COMPETENT DIVISION OF R&D DEPARTMENT EXCEPT AS AUTHORIZED BY COMPAL ELECTRONICS, INC. NEITHER THIS SHEET NOR THE INFORMATION IT CONTAINS MAY BE USED BY OR DISCLOSED TO ANY THIRD PARTY WITHOUT PRIOR WRITTEN CONSENT OF COMPAL ELECTRONICS, INC.

Compal Electronics, Inc.

Title: **ICH9(2/4)_LAN,HD,IDE,LPC**

Size	Document Number	Rev
Custom	LA-4595P	1.0

Date: Tuesday, February 17, 2009 | Sheet 18 of 49

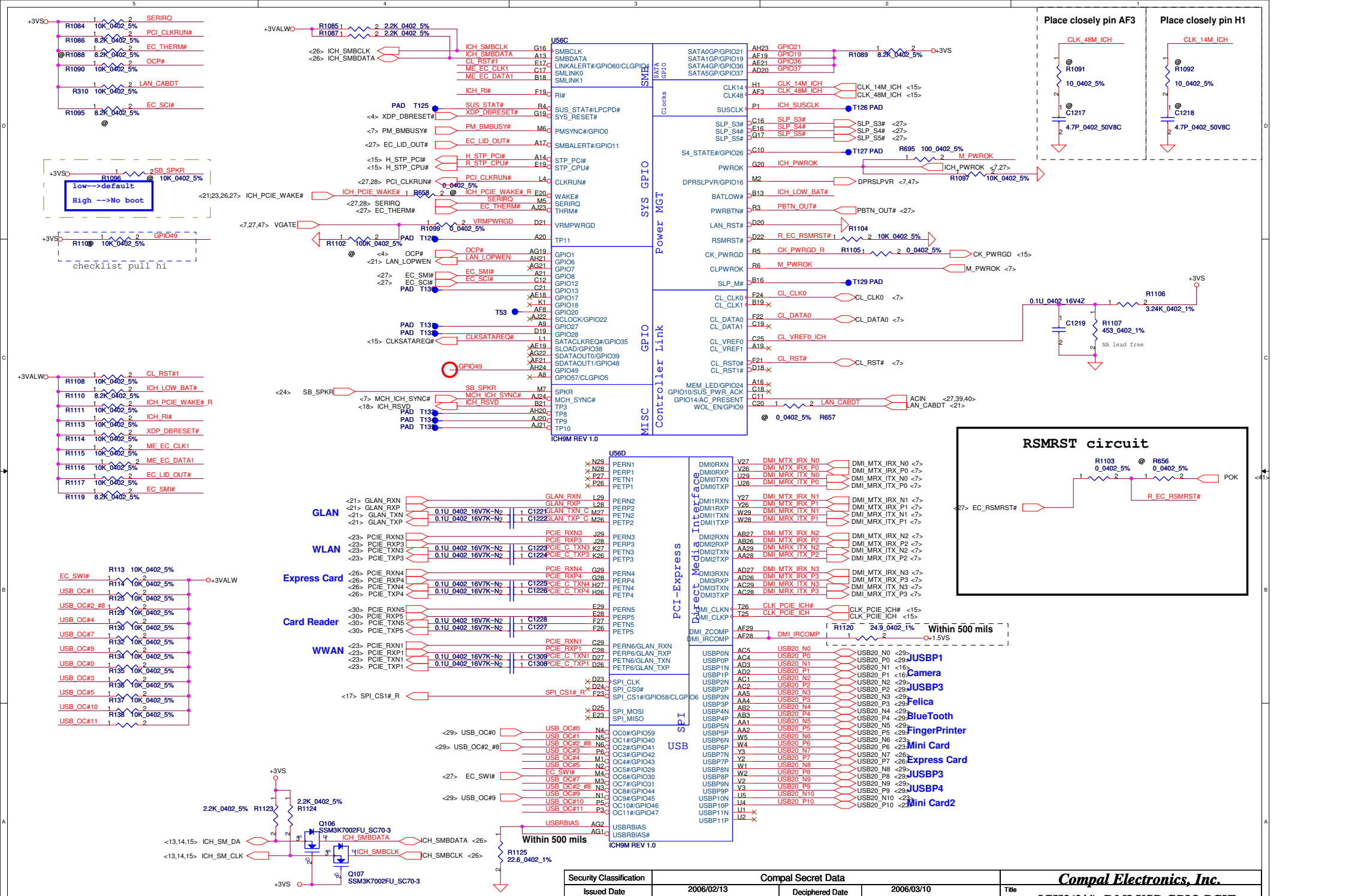

Security Classification	Compal Secret Data		
Issued Date	2006/02/13	Deciphered Date	2006/03/10

THIS SHEET OF ENGINEERING DRAWING IS THE PROPRIETARY PROPERTY OF COMPAL ELECTRONICS, INC. AND CONTAINS CONFIDENTIAL AND TRADE SECRET INFORMATION. THIS SHEET MAY NOT BE TRANSFERED FROM THE CUSTODY OF THE COMPETENT DIVISION OF R&D DEPARTMENT EXCEPT AS AUTHORIZED BY COMPAL ELECTRONICS, INC. NEITHER THIS SHEET NOR THE INFORMATION IT CONTAINS MAY BE USED BY OR DISCLOSED TO ANY THIRD PARTY WITHOUT PRIOR WRITTEN CONSENT OF COMPAL ELECTRONICS, INC.

Compal Electronics, Inc.

Title: ICH9(3/4) DMI,USB,GPIO,PCIE

Size: Custom | Document Number: LA-4595P | Rev: 1.0

Date: Tuesday, February 17, 2009 | Sheet 19 of 49

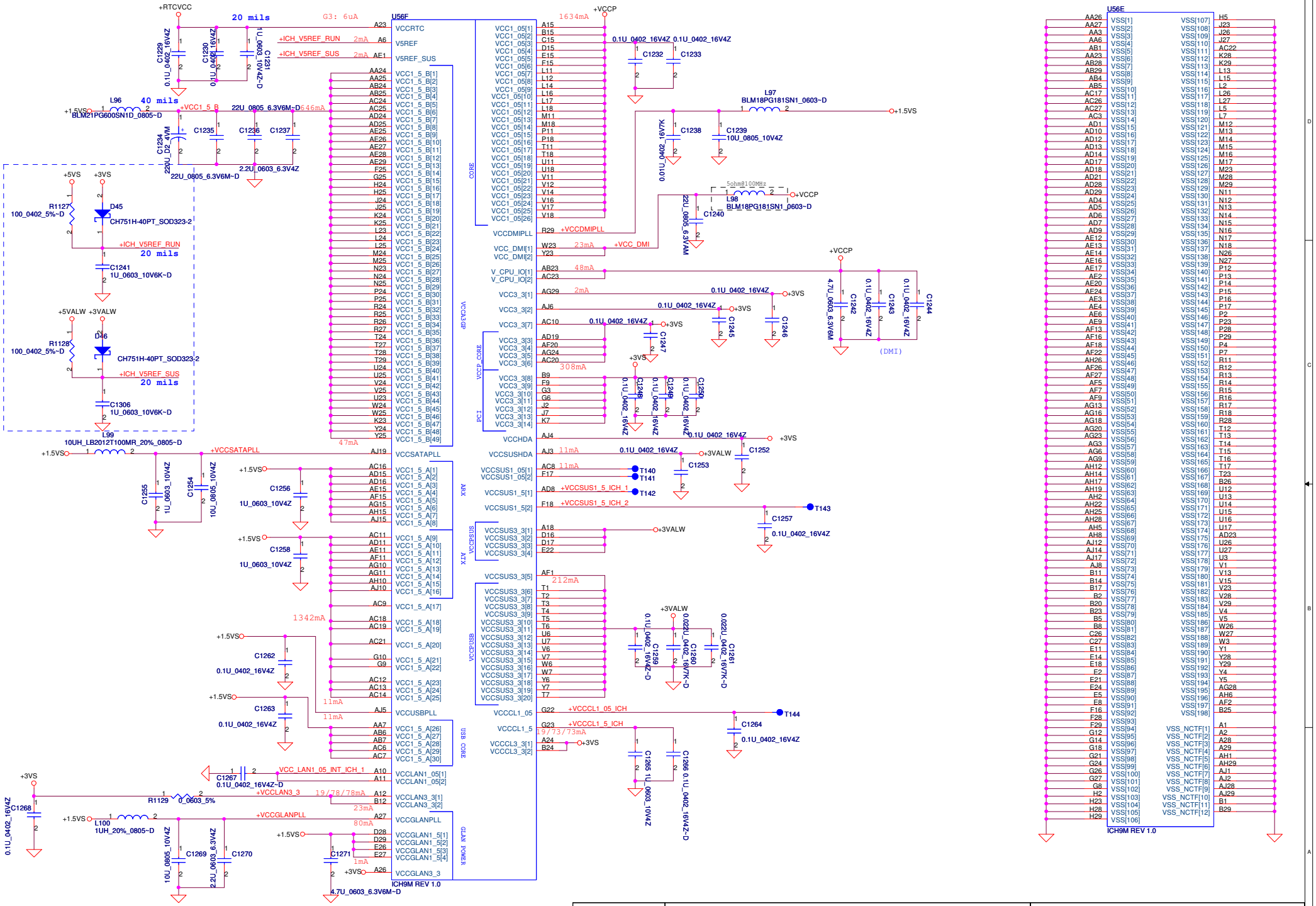

Security Classification	Compal Secret Data		
Issued Date	2006/02/13	Deciphered Date	2006/03/10

THIS SHEET OF ENGINEERING DRAWING IS THE PROPRIETARY PROPERTY OF COMPAL ELECTRONICS, INC. AND CONTAINS CONFIDENTIAL AND TRADE SECRET INFORMATION. THIS SHEET MAY NOT BE TRANSFERED FROM THE CUSTODY OF THE COMPETENT DIVISION OF R&D DEPARTMENT EXCEPT AS AUTHORIZED BY COMPAL ELECTRONICS, INC. NEITHER THIS SHEET NOR THE INFORMATION IT CONTAINS MAY BE USED BY OR DISCLOSED TO ANY THIRD PARTY WITHOUT PRIOR WRITTEN CONSENT OF COMPAL ELECTRONICS, INC.

Compal Electronics, Inc.

Title: ICH9(4/4)_POWER&GND

Size: Custom | Document Number: LA-4595P | Rev: 1.0

Date: Tuesday, February 17, 2009 | Sheet 20 of 49

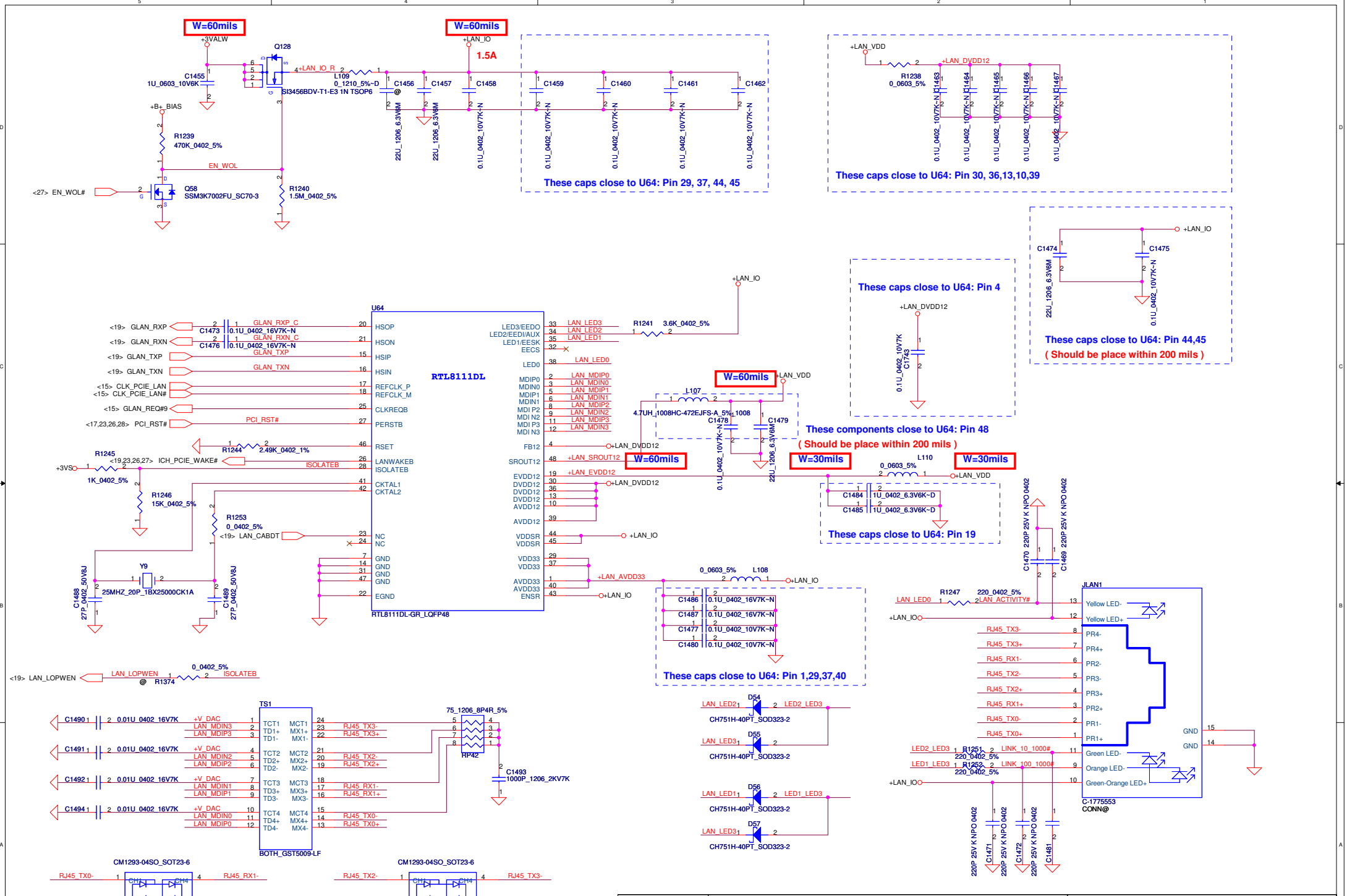

Security Classification	Compal Secret Data		
Issued Date	2008/03/21	Deciphered Date	2009/03/21

THIS SHEET OF ENGINEERING DRAWING IS THE PROPRIETARY PROPERTY OF COMPAL ELECTRONICS, INC. AND CONTAINS CONFIDENTIAL AND TRADE SECRET INFORMATION. THIS SHEET MAY NOT BE TRANSFERED FROM THE CUSTODY OF THE COMPETENT DIVISION OF R&D DEPARTMENT EXCEPT AS AUTHORIZED BY COMPAL ELECTRONICS, INC. NEITHER THIS SHEET NOR THE INFORMATION IT CONTAINS MAY BE USED BY OR DISCLOSED TO ANY THIRD PARTY WITHOUT PRIOR WRITTEN CONSENT OF COMPAL ELECTRONICS, INC.

Compal Electronics, Inc.

Title: **Gigabit LAN RTL8111C**

Size: Custom | Document Number: **LA-4595P** | Rev: 1.0

Date: Tuesday, February 17, 2009 | Sheet 21 of 49

SATA HDD CONN

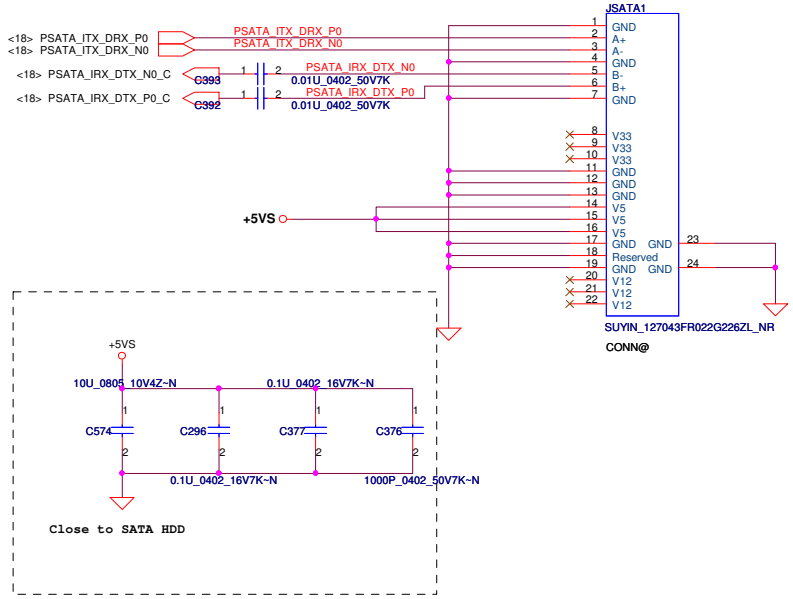

SATA ODD CONN

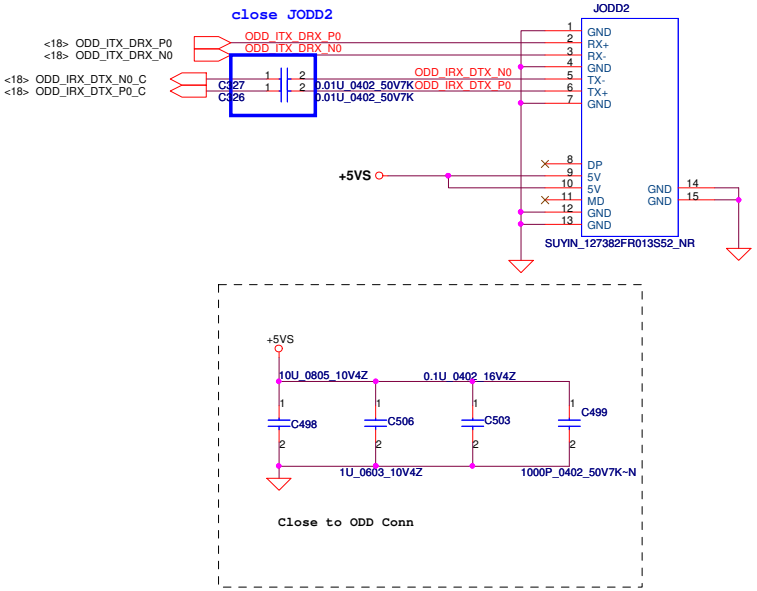

Security Classification	Compal Secret Data			Compal Electronics, Inc.
Issued Date	2007/1/15	Deciphered Date	2008/1/15	Title: HDD/CDROM
				Size: Custom; Document Number: LA-4595P; Rev: 1.0
				Date: Tuesday, February 17, 2009; Sheet 22 of 49

THIS SHEET OF ENGINEERING DRAWING IS THE PROPRIETARY PROPERTY OF COMPAL ELECTRONICS, INC. AND CONTAINS CONFIDENTIAL AND TRADE SECRET INFORMATION. THIS SHEET MAY NOT BE TRANSFERED FROM THE CUSTODY OF THE COMPETENT DIVISION OF R&D DEPARTMENT EXCEPT AS AUTHORIZED BY COMPAL ELECTRONICS, INC. NEITHER THIS SHEET NOR THE INFORMATION IT CONTAINS MAY BE USED BY OR DISCLOSED TO ANY THIRD PARTY WITHOUT PRIOR WRITTEN CONSENT OF COMPAL ELECTRONICS, INC.

WWAN

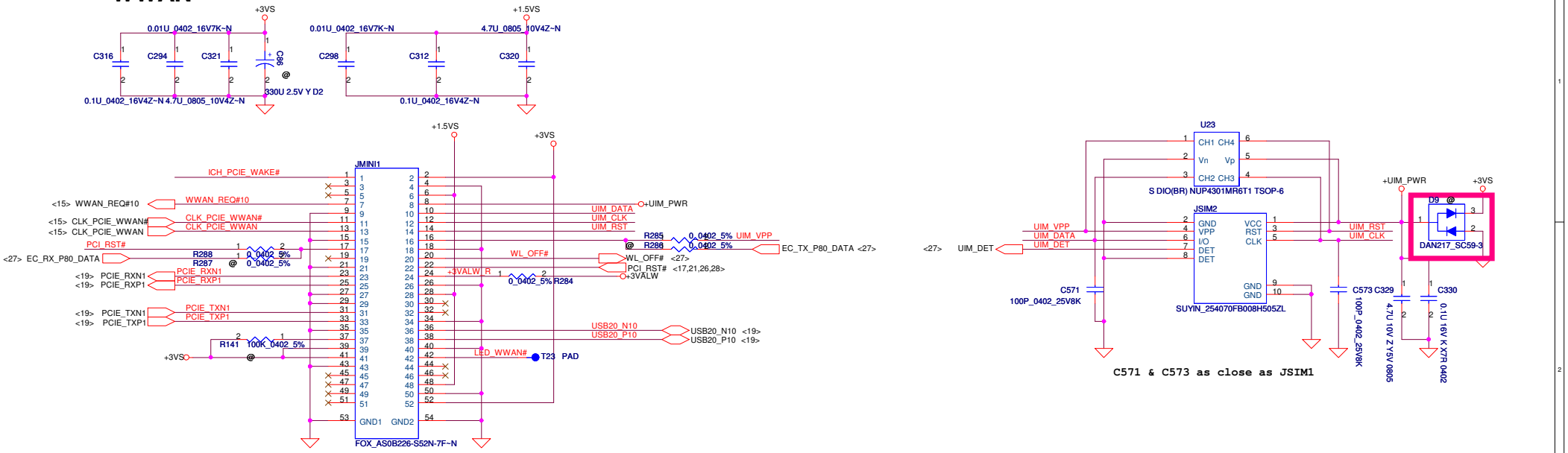

Mini-Express Card---WLAN

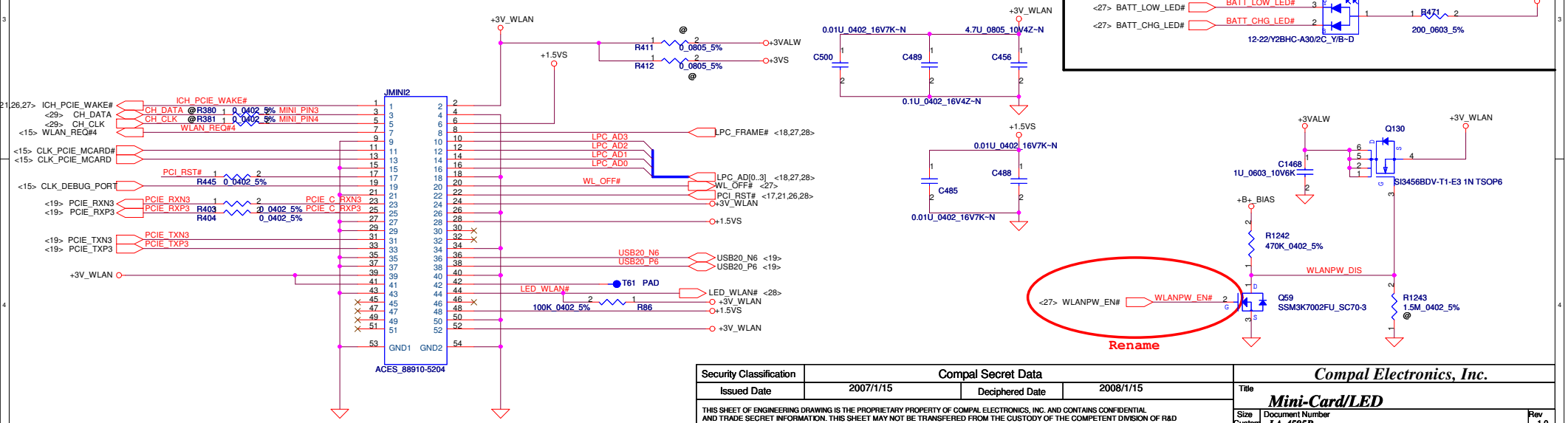

Power status(Left)

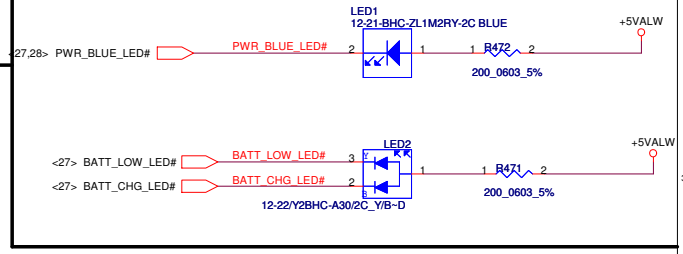

Security Classification	Compal Secret Data		
Issued Date	2007/1/15	Deciphered Date	2008/1/15

THIS SHEET OF ENGINEERING DRAWING IS THE PROPRIETARY PROPERTY OF COMPAL ELECTRONICS, INC. AND CONTAINS CONFIDENTIAL AND TRADE SECRET INFORMATION. THIS SHEET MAY NOT BE TRANSFERED FROM THE CUSTODY OF THE COMPETENT DIVISION OF R&D DEPARTMENT EXCEPT AS AUTHORIZED BY COMPAL ELECTRONICS, INC. NEITHER THIS SHEET NOR THE INFORMATION IT CONTAINS MAY BE USED BY OR DISCLOSED TO ANY THIRD PARTY WITHOUT PRIOR WRITTEN CONSENT OF COMPAL ELECTRONICS, INC.

Compal Electronics, Inc.

Title: ***Mini-Card/LED***

Size	Document Number	Rev
Custom	LA-4595P	1.0

Date: Tuesday, February 17, 2009 | Sheet 23 of 49

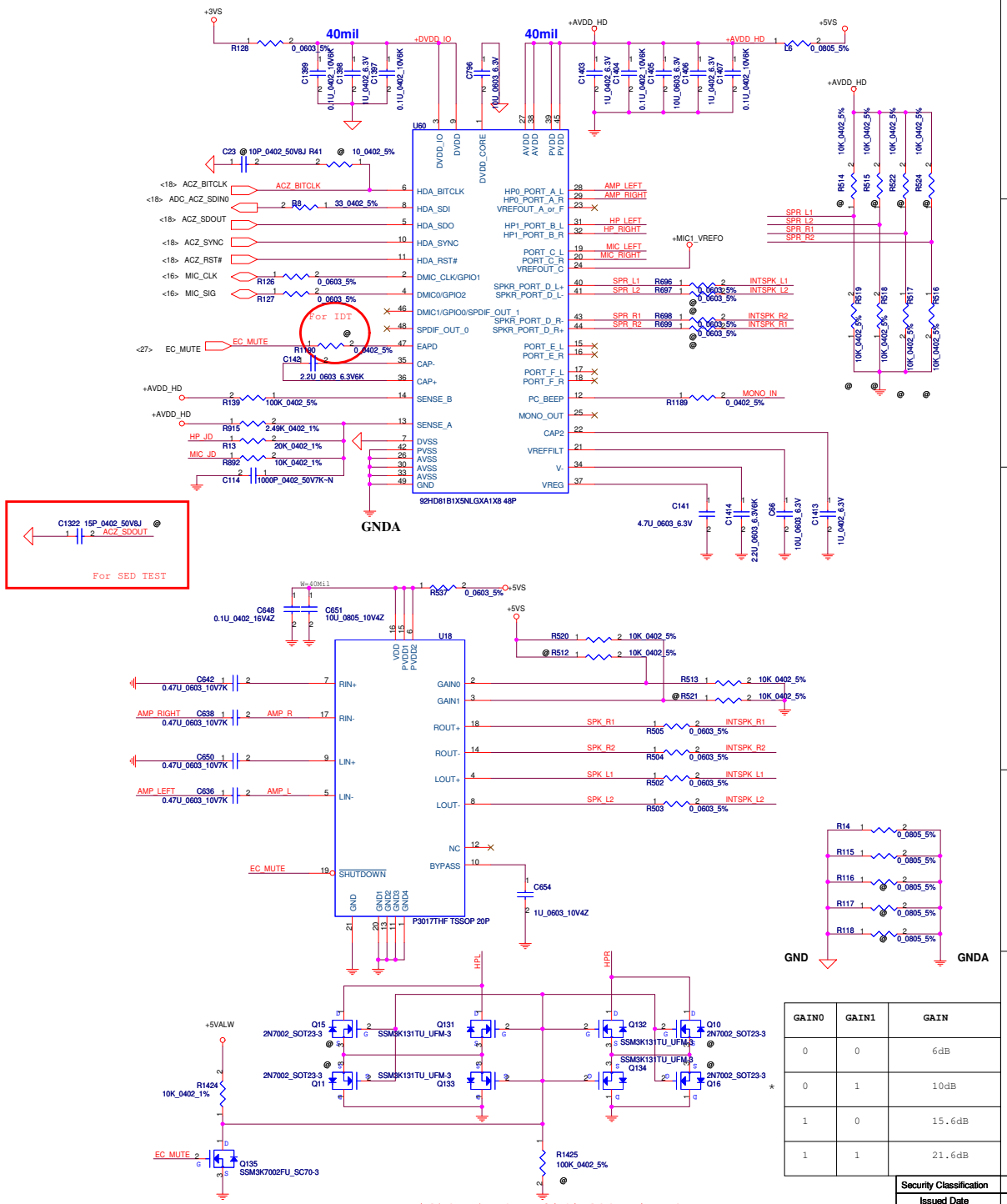

GAIN0	GAIN1	GAIN
0	0	6dB
0	1	10dB
1	0	15.6dB
1	1	21.6dB

HEADPHONE OUT JACK

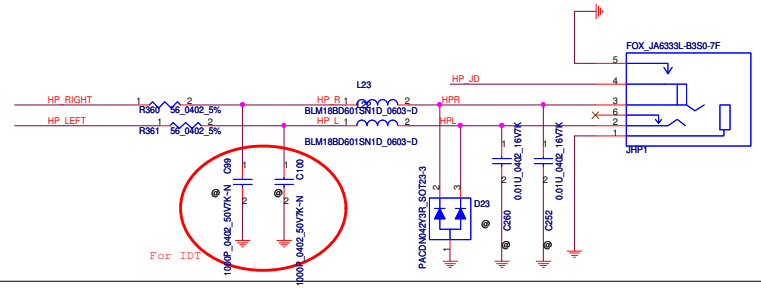

MICROPHONE IN JACK

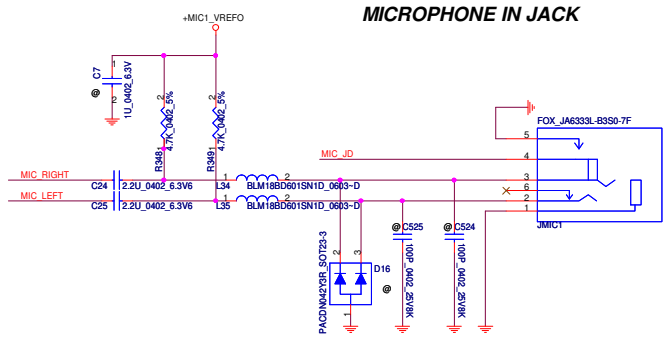

EC Beep

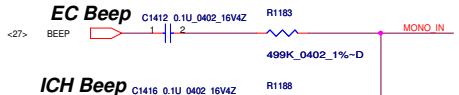

ICH Beep

Speaker Connector

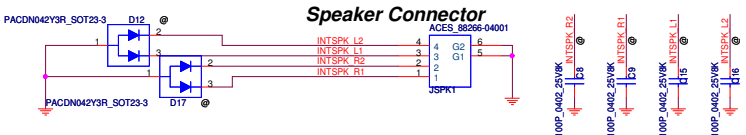

Compal Electronics, Inc.

Security Classification	Compal Secret Data		
Issued Date	2008/05/07	Deciphered Date	2009/05/07

THIS SHEET OF ENGINEERING DRAWING IS THE PROPRIETARY PROPERTY OF COMPAL ELECTRONICS, INC. AND CONTAINS CONFIDENTIAL AND TRADE SECRET INFORMATION. THIS SHEET MAY NOT BE TRANSFERED FROM THE CUSTODY OF THE COMPETENT DIVISION OF R&D DEPARTMENT EXCEPT AS AUTHORIZED BY COMPAL ELECTRONICS, INC. NEITHER THIS SHEET NOR THE INFORMATION IT CONTAINS MAY BE USED BY OR DISCLOSED TO ANY THIRD PARTY WITHOUT PRIOR WRITTEN CONSENT OF COMPAL ELECTRONICS, INC.

Title	HD CODEC 92HD81	
Size	Document Number: LA-4595P	Rev 1.0
Date: Tuesday, February 17, 2009	Sheet 24 of 49	

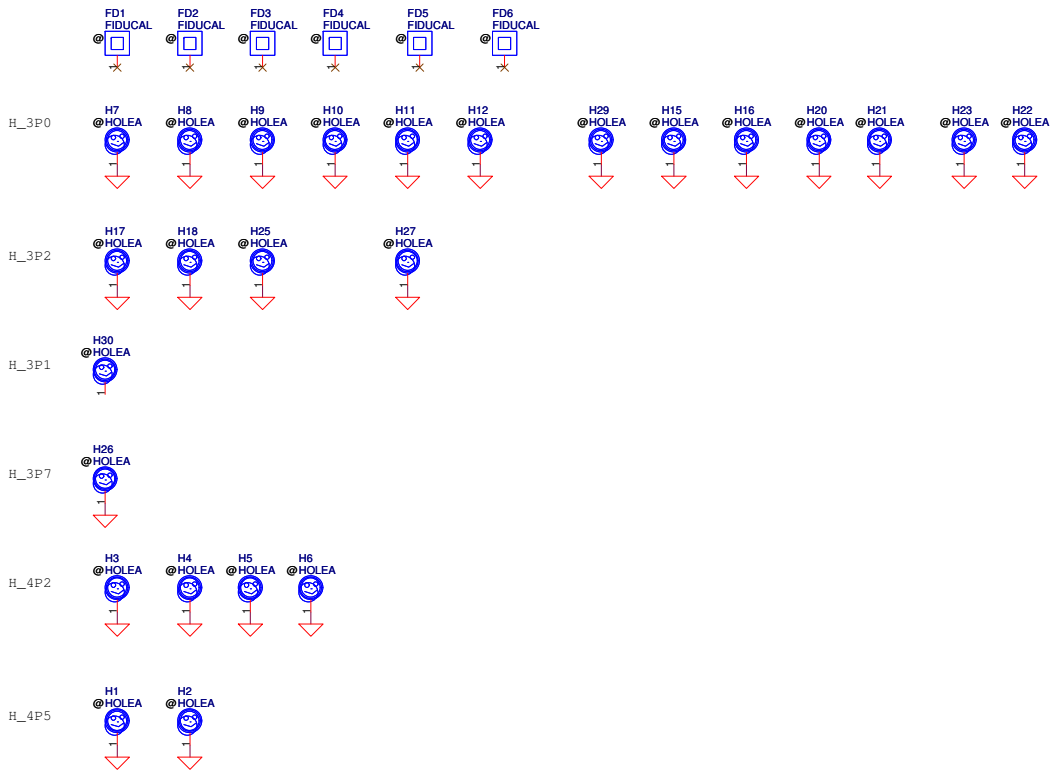

Security Classification	Compal Secret Data		
Issued Date	2007/1/15	Deciphered Date	2008/1/15

THIS SHEET OF ENGINEERING DRAWING IS THE PROPRIETARY PROPERTY OF COMPAL ELECTRONICS, INC. AND CONTAINS CONFIDENTIAL AND TRADE SECRET INFORMATION. THIS SHEET MAY NOT BE TRANSFERED FROM THE CUSTODY OF THE COMPETENT DIVISION OF R&D DEPARTMENT EXCEPT AS AUTHORIZED BY COMPAL ELECTRONICS, INC. NEITHER THIS SHEET NOR THE INFORMATION IT CONTAINS MAY BE USED BY OR DISCLOSED TO ANY THIRD PARTY WITHOUT PRIOR WRITTEN CONSENT OF COMPAL ELECTRONICS, INC.

Compal Electronics, Inc.

Title: **Screws**

Size: Custom | Document Number: LA-4595P | Rev: 1.0

Date: Tuesday, February 17, 2009 | Sheet 25 of 49

Express card

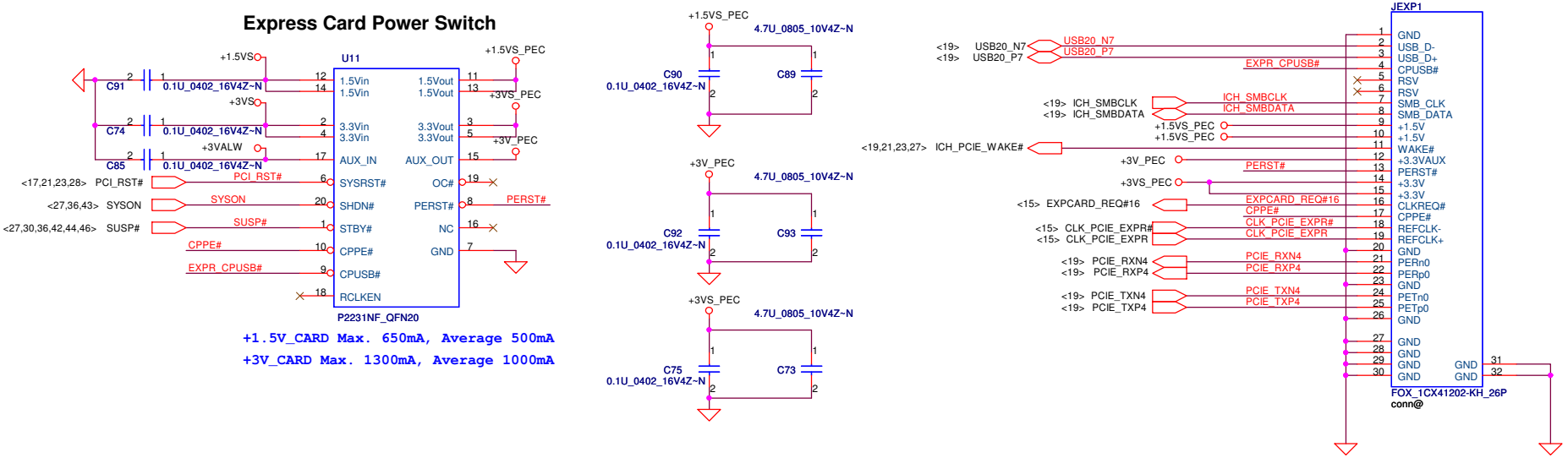

Security Classification	Compal Secret Data		
Issued Date	2007/1/15	Deciphered Date	2008/1/15

THIS SHEET OF ENGINEERING DRAWING IS THE PROPRIETARY PROPERTY OF COMPAL ELECTRONICS, INC. AND CONTAINS CONFIDENTIAL AND TRADE SECRET INFORMATION. THIS SHEET MAY NOT BE TRANSFERED FROM THE CUSTODY OF THE COMPETENT DIVISION OF R&D DEPARTMENT EXCEPT AS AUTHORIZED BY COMPAL ELECTRONICS, INC. NEITHER THIS SHEET NOR THE INFORMATION IT CONTAINS MAY BE USED BY OR DISCLOSED TO ANY THIRD PARTY WITHOUT PRIOR WRITTEN CONSENT OF COMPAL ELECTRONICS, INC.

Compal Electronics, Inc.

Title: **EXPRESS CARD**

Size: Custom | Document Number: **LA-4595P** | Rev: 1.0

Date: Tuesday, February 17, 2009 | Sheet 26 of 49

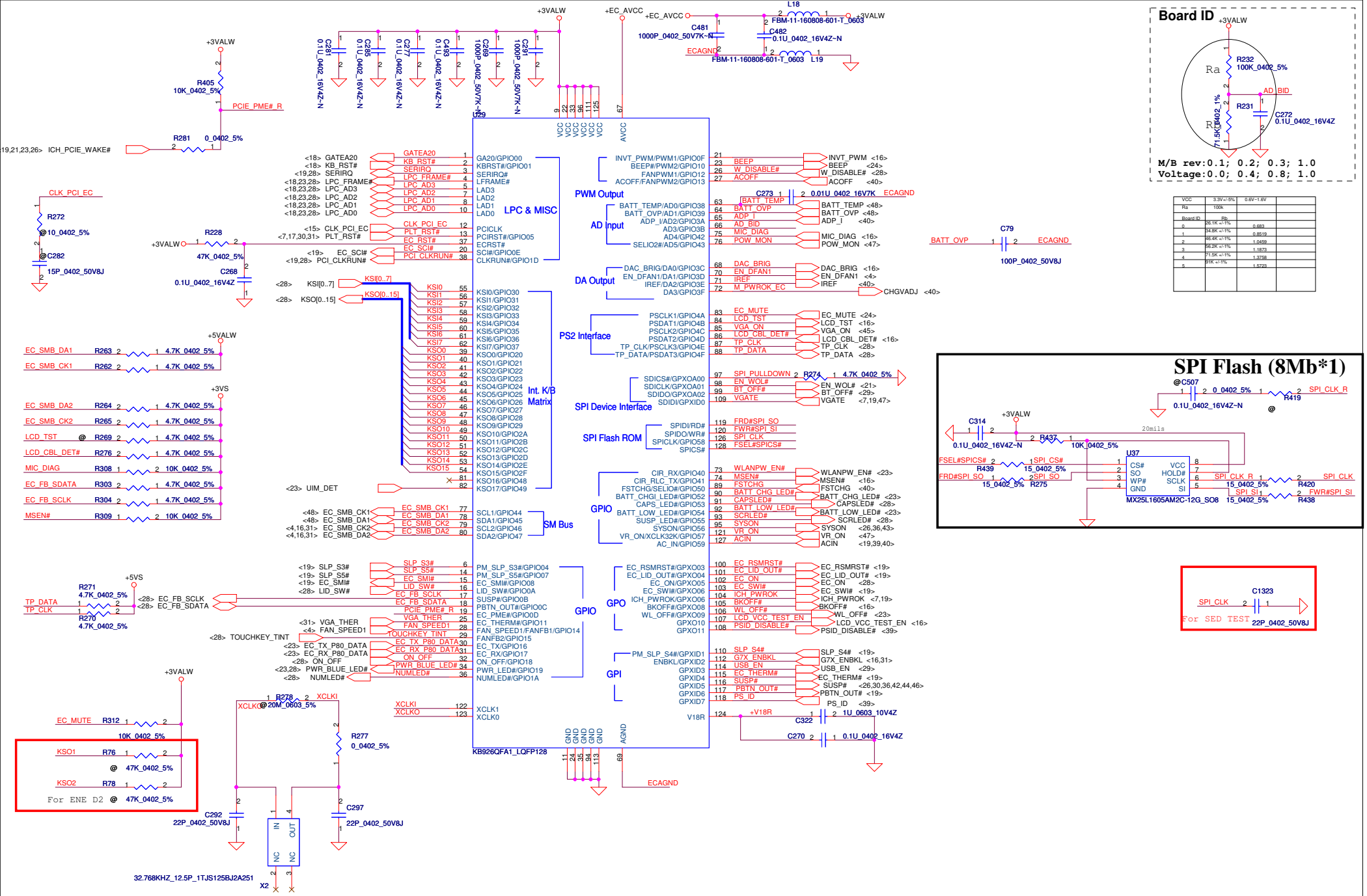

Security Classification	Compal Secret Data		
Issued Date	2007/1/15	Deciphered Date	2008/1/15

THIS SHEET OF ENGINEERING DRAWING IS THE PROPRIETARY PROPERTY OF COMPAL ELECTRONICS, INC. AND CONTAINS CONFIDENTIAL AND TRADE SECRET INFORMATION. THIS SHEET MAY NOT BE TRANSFERED FROM THE CUSTODY OF THE COMPETENT DIVISION OF R&D DEPARTMENT EXCEPT AS AUTHORIZED BY COMPAL ELECTRONICS, INC. NEITHER THIS SHEET NOR THE INFORMATION IT CONTAINS MAY BE USED BY OR DISCLOSED TO ANY THIRD PARTY WITHOUT PRIOR WRITTEN CONSENT OF COMPAL ELECTRONICS, INC.

Compal Electronics, Inc.

Title: BIOS & EC I/O Port

Size: Custom | Document Number: LA-4595P | Rev: 1.0

Date: Tuesday, February 17, 2009 | Sheet 27 of 49

Power Button

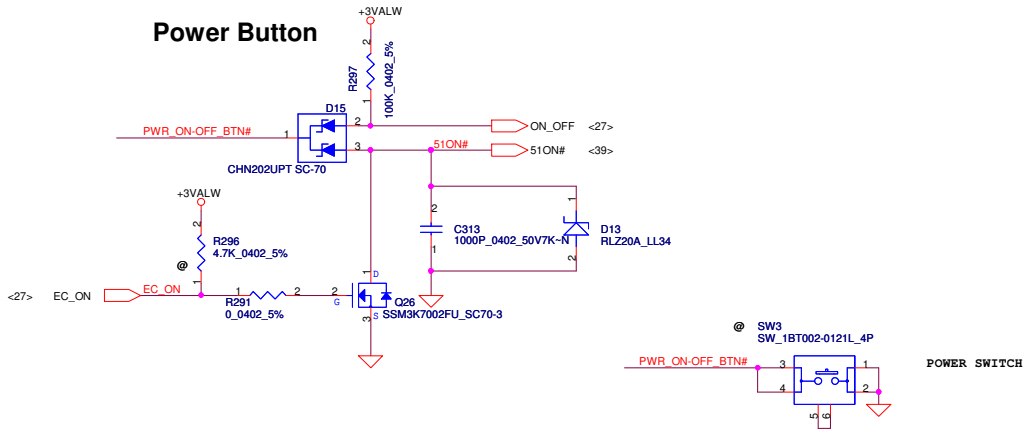

Wireless_BTN

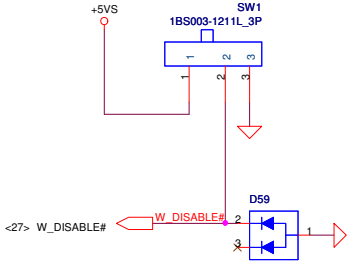

Regulator for ENE sensor

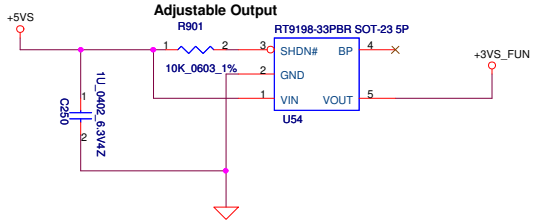

TPM 1.2

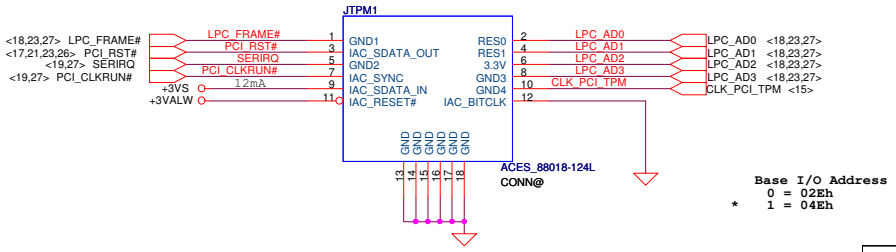

Base I/O Address
0 = 02Eh
* 1 = 04Eh

INT_KBD CONN.

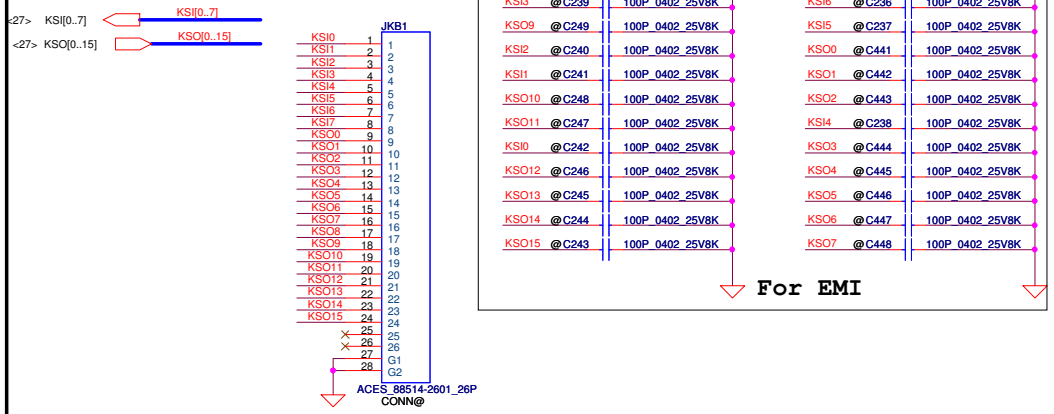

Function/B CONN.

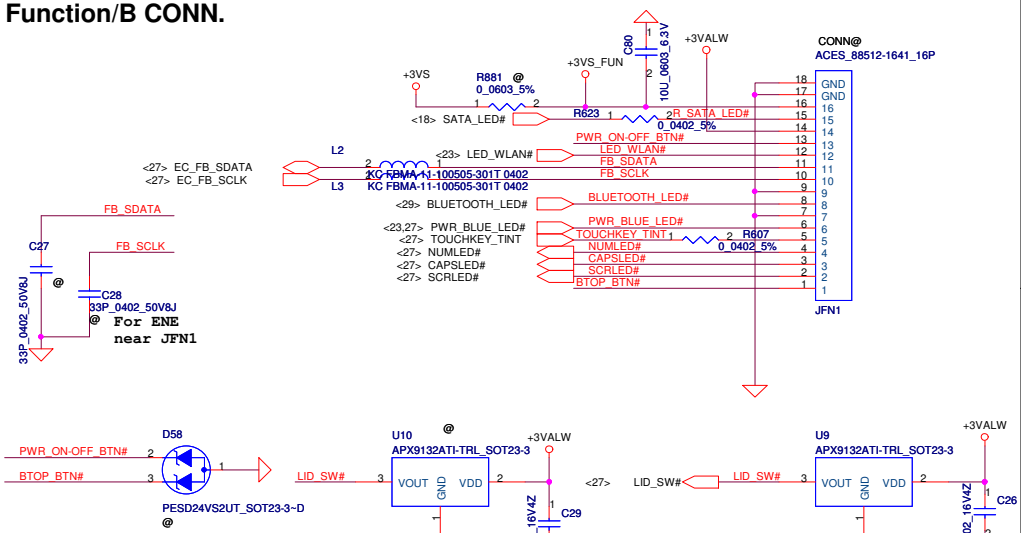

Touch PAD/B CONN.

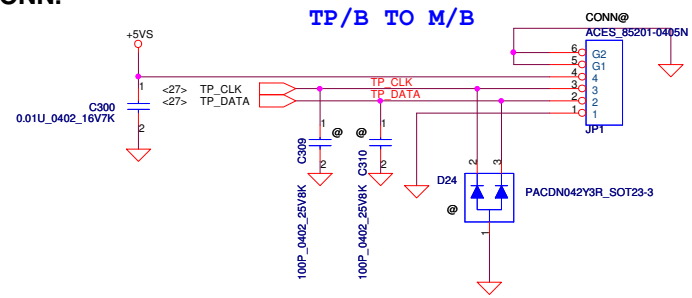

Security Classification	Compal Secret Data			Compal Electronics, Inc.
Issued Date	2007/1/15	Deciphered Date	2008/1/15	Title: PWR_OK/BTN/TP
				Size: Custom; Document Number: LA-4595P; Rev: 1.0
				Date: Tuesday, February 17, 2009; Sheet 28 of 49

THIS SHEET OF ENGINEERING DRAWING IS THE PROPRIETARY PROPERTY OF COMPAL ELECTRONICS, INC. AND CONTAINS CONFIDENTIAL AND TRADE SECRET INFORMATION. THIS SHEET MAY NOT BE TRANSFERED FROM THE CUSTODY OF THE COMPETENT DIVISION OF R&D DEPARTMENT EXCEPT AS AUTHORIZED BY COMPAL ELECTRONICS, INC. NEITHER THIS SHEET NOR THE INFORMATION IT CONTAINS MAY BE USED BY OR DISCLOSED TO ANY THIRD PARTY WITHOUT PRIOR WRITTEN CONSENT OF COMPAL ELECTRONICS, INC.

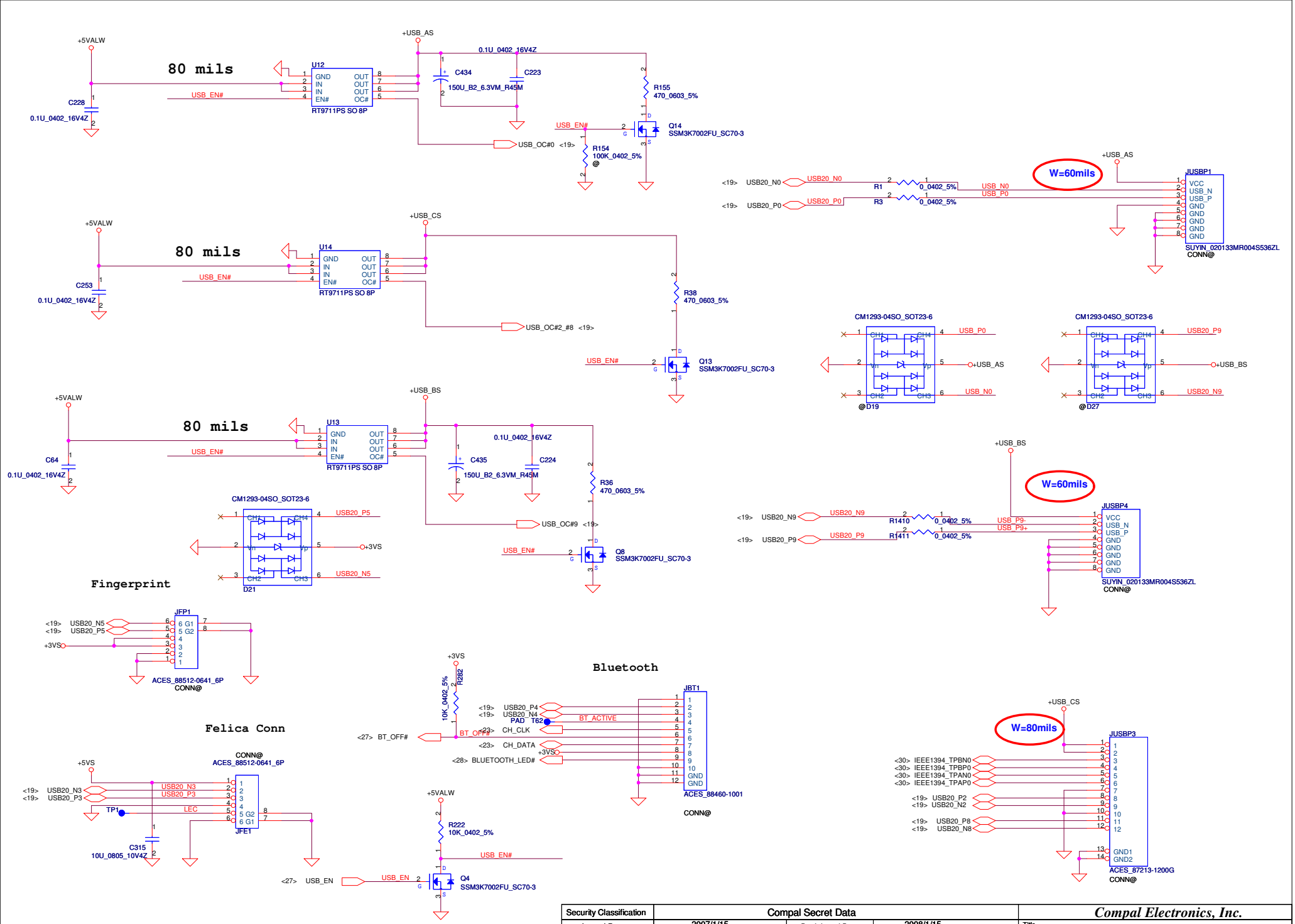

Security Classification	Compal Secret Data		
Issued Date	2007/1/15	Deciphered Date	2008/1/15

THIS SHEET OF ENGINEERING DRAWING IS THE PROPRIETARY PROPERTY OF COMPAL ELECTRONICS, INC. AND CONTAINS CONFIDENTIAL AND TRADE SECRET INFORMATION. THIS SHEET MAY NOT BE TRANSFERED FROM THE CUSTODY OF THE COMPETENT DIVISION OF R&D DEPARTMENT EXCEPT AS AUTHORIZED BY COMPAL ELECTRONICS, INC. NEITHER THIS SHEET NOR THE INFORMATION IT CONTAINS MAY BE USED BY OR DISCLOSED TO ANY THIRD PARTY WITHOUT PRIOR WRITTEN CONSENT OF COMPAL ELECTRONICS, INC.

Compal Electronics, Inc.

Title: **USB/BlueTooth/FP/Felcia**

Size: Custom | Document Number: LA-4595P | Rev: 1.0

Date: Tuesday, February 17, 2009 | Sheet 29 of 49

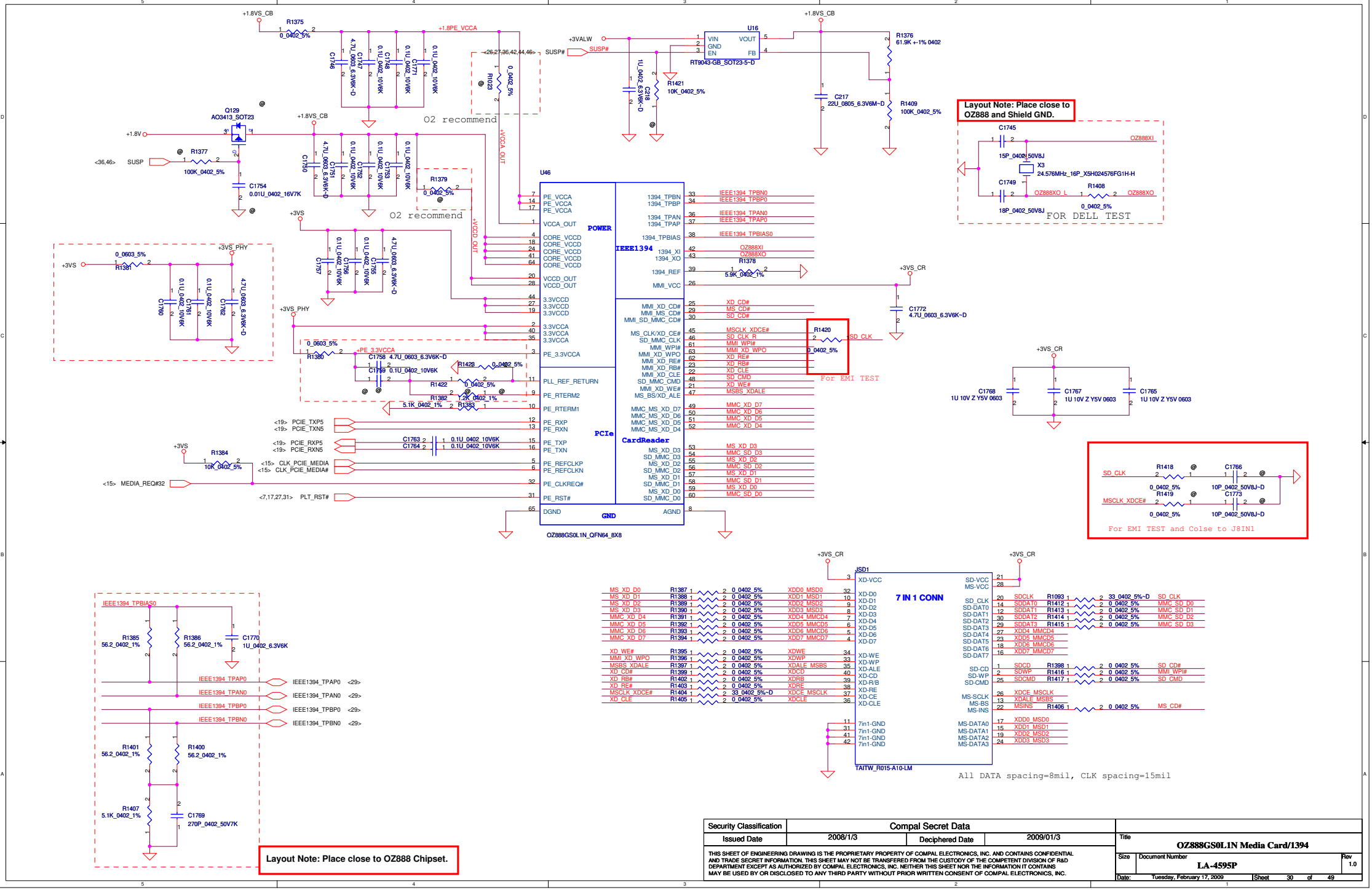

Security Classification	Compal Secret Data		
Issued Date	2008/1/3	Deciphered Date	2009/01/3

THIS SHEET OF ENGINEERING DRAWING IS THE PROPRIETARY PROPERTY OF COMPAL ELECTRONICS, INC. AND CONTAINS CONFIDENTIAL AND TRADE SECRET INFORMATION. THIS SHEET MAY NOT BE TRANSFERED FROM THE CUSTODY OF THE COMPETENT DIVISION OF R&D DEPARTMENT EXCEPT AS AUTHORIZED BY COMPAL ELECTRONICS, INC. NEITHER THIS SHEET NOR THE INFORMATION IT CONTAINS MAY BE USED BY OR DISCLOSED TO ANY THIRD PARTY WITHOUT PRIOR WRITTEN CONSENT OF COMPAL ELECTRONICS, INC.

Title: **OZ888GS0L1N Media Card/1394**

Size | Document Number: **LA-4595P** | Rev: 1.0

Date: Tuesday, February 17, 2009 | Sheet 30 of 49

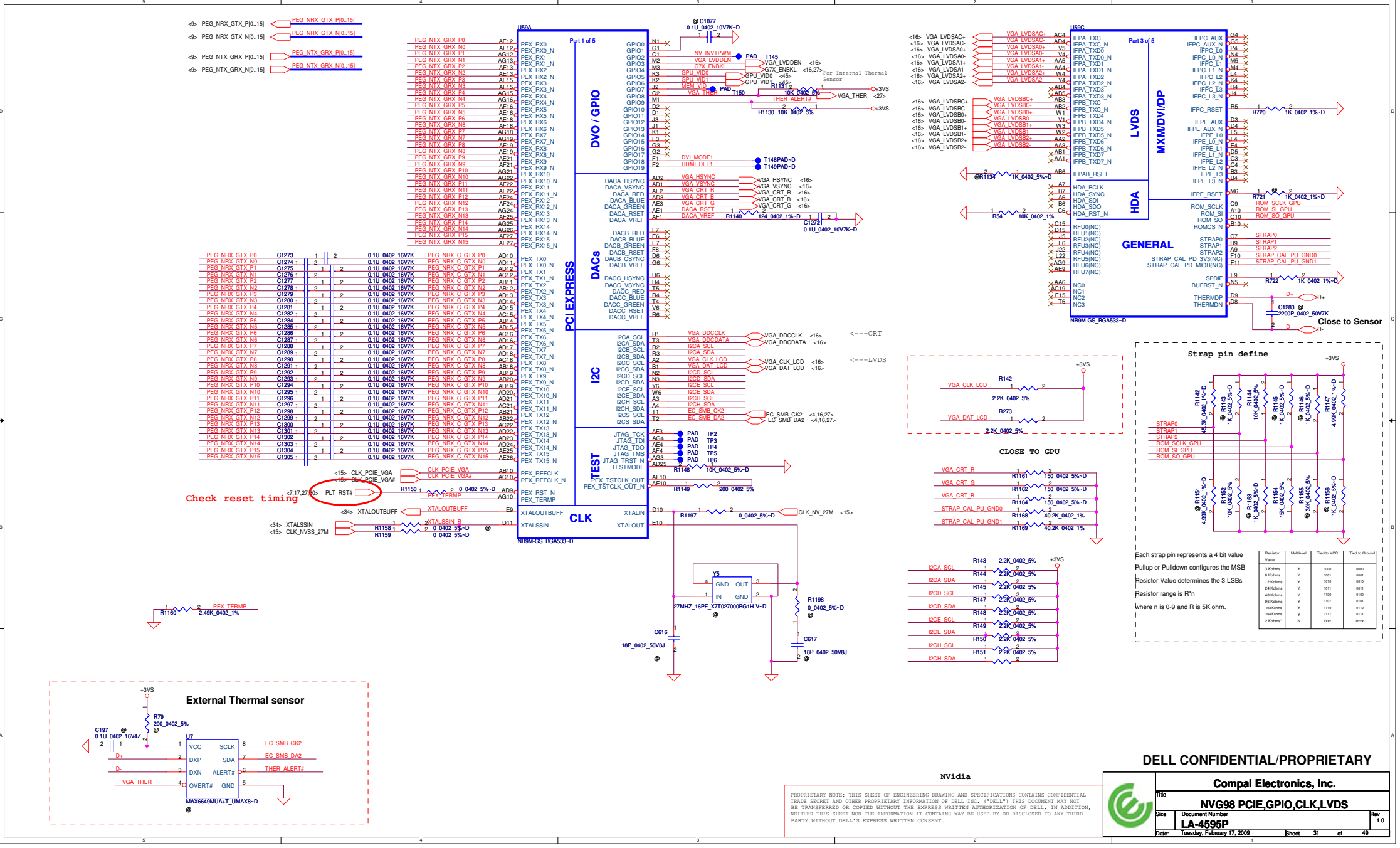
U59A
Part 1 of 5
PCI EXPRESS
DVO / GPIO
DACs
I2C
TEST
CLK
NB9M-GS_BGA533-D
U59C
Part 3 of 5
LVDS
MXM/DVI/DP
HDA
GENERAL
Close to Sensor
Check reset timing
External Thermal sensor
Strap pin define
CLOSE TO GPU
Each strap pin represents a 4 bit value
Pullup or Pulldown configures the MSB
Resistor Value determines the 3 LSBs
Resistor range is R*n
where n is 0-9 and R is 5K ohm.
NVidia
DELL CONFIDENTIAL/PROPRIETARY
Compal Electronics, Inc.
NVG98 PCIE,GPIO,CLK,LVDS
LA-4595P
Rev 1.0
Tuesday, February 17, 2009
Sheet 31 of 49

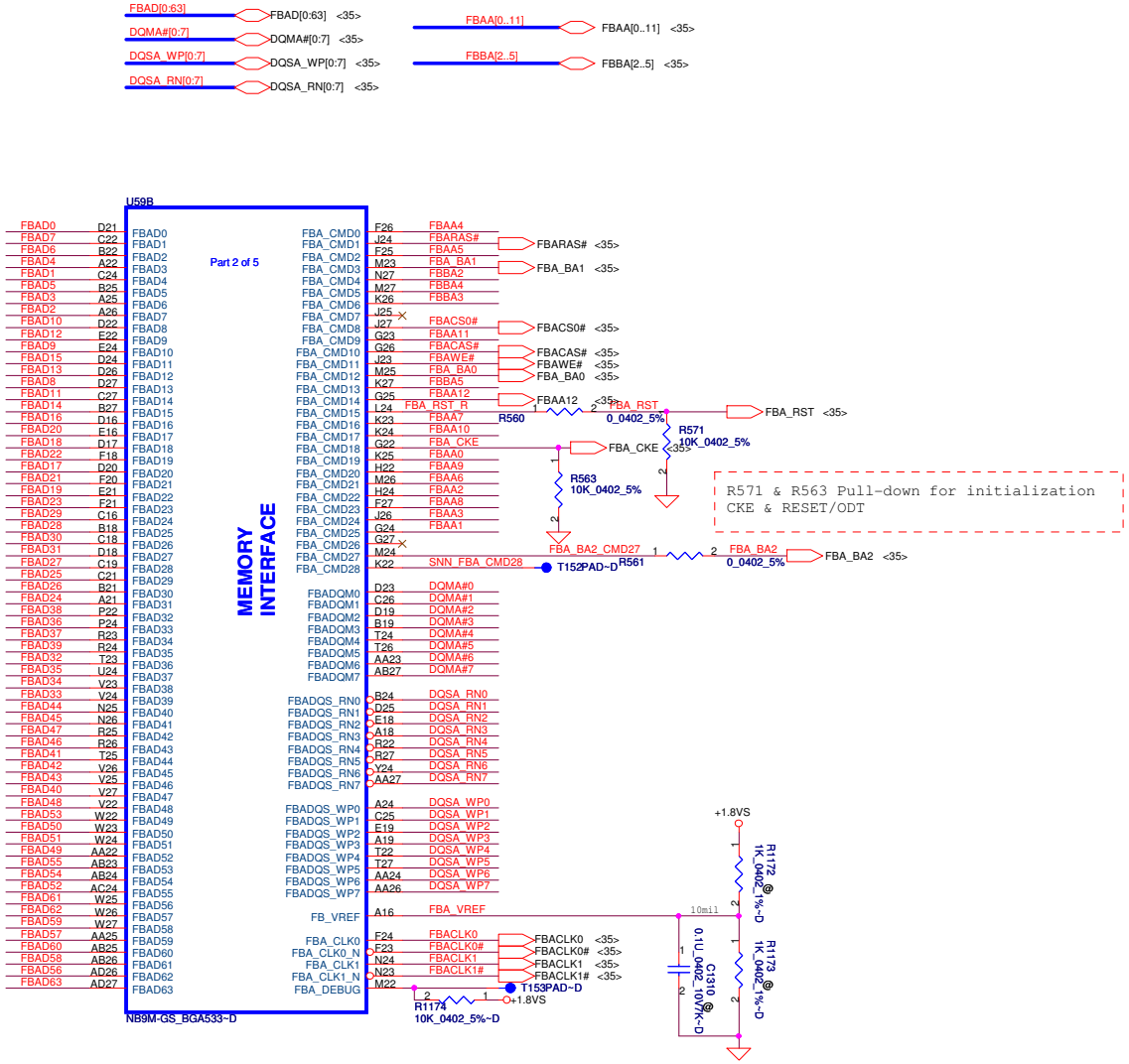

DELL CONFIDENTIAL/PROPRIETARY

PROPRIETARY NOTE: THIS SHEET OF ENGINEERING DRAWING AND SPECIFICATIONS CONTAINS CONFIDENTIAL TRADE SECRET AND OTHER PROPRIETARY INFORMATION OF DELL INC. ("DELL") THIS DOCUMENT MAY NOT BE TRANSFERRED OR COPIED WITHOUT THE EXPRESS WRITTEN AUTHORIZATION OF DELL. IN ADDITION, NEITHER THIS SHEET NOR THE INFORMATION IT CONTAINS WAY BE USED BY OR DISCLOSED TO ANY THIRD PARTY WITHOUT DELL'S EXPRESS WRITTEN CONSENT.

Compal Electronics, Inc.

Title: NVG98 Memory Interface

Size: | Document Number: LA-4595P | Rev: 1.0

Date: Tuesday, February 17, 2009 | Sheet 32 of 49

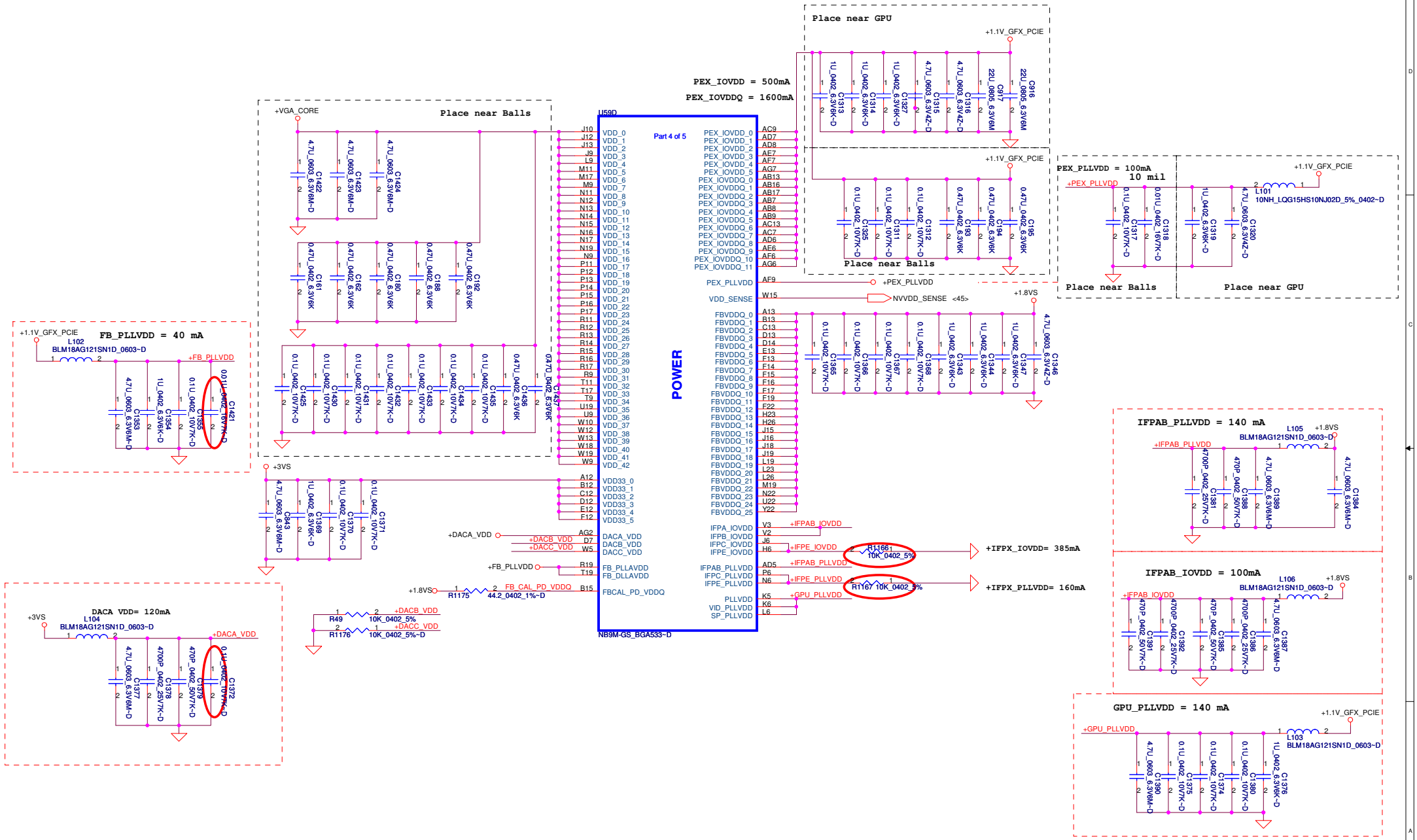

DELL CONFIDENTIAL/PROPRIETARY

PROPRIETARY NOTE: THIS SHEET OF ENGINEERING DRAWING AND SPECIFICATIONS CONTAINS CONFIDENTIAL TRADE SECRET AND OTHER PROPRIETARY INFORMATION OF DELL INC. ("DELL") THIS DOCUMENT MAY NOT BE TRANSFERRED OR COPIED WITHOUT THE EXPRESS WRITTEN AUTHORIZATION OF DELL. IN ADDITION, NEITHER THIS SHEET NOR THE INFORMATION IT CONTAINS WAY BE USED BY OR DISCLOSED TO ANY THIRD PARTY WITHOUT DELL'S EXPRESS WRITTEN CONSENT.

Compal Electronics, Inc.	
Title	NVG98 POWER
Size	
Document Number	LA-4595P
Rev	1.0
Date: Tuesday, February 17, 2009	Sheet 33 of 49

	D_C
-1.75% (DOWN)	0
±0.875% (CENTER)	1

D_C Internal pull up

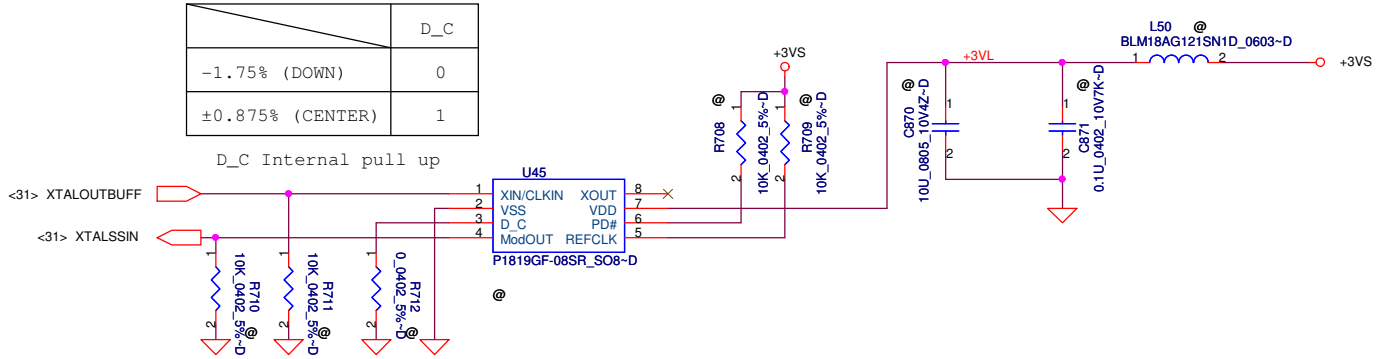

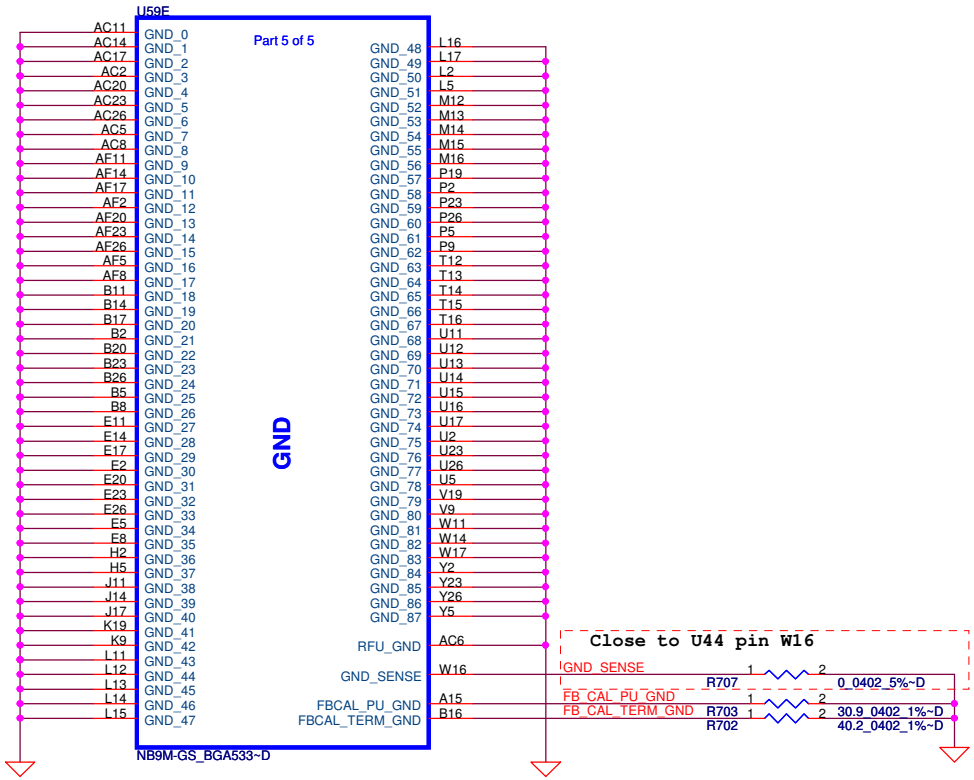

PROPRIETARY NOTE: THIS SHEET OF ENGINEERING DRAWING AND SPECIFICATIONS CONTAINS CONFIDENTIAL TRADE SECRET AND OTHER PROPRIETARY INFORMATION OF DELL INC. ("DELL") THIS DOCUMENT MAY NOT BE TRANSFERRED OR COPIED WITHOUT THE EXPRESS WRITTEN AUTHORIZATION OF DELL. IN ADDITION, NEITHER THIS SHEET NOR THE INFORMATION IT CONTAINS WAY BE USED BY OR DISCLOSED TO ANY THIRD PARTY WITHOUT DELL'S EXPRESS WRITTEN CONSENT.

DELL CONFIDENTIAL/PROPRIETARY

Compal Electronics, Inc.

Title: **NVG98 GND**

Size: | Document Number: **LA-4595P** | Rev: 1.0

Date: Tuesday, February 17, 2009 | Sheet 34 of 49

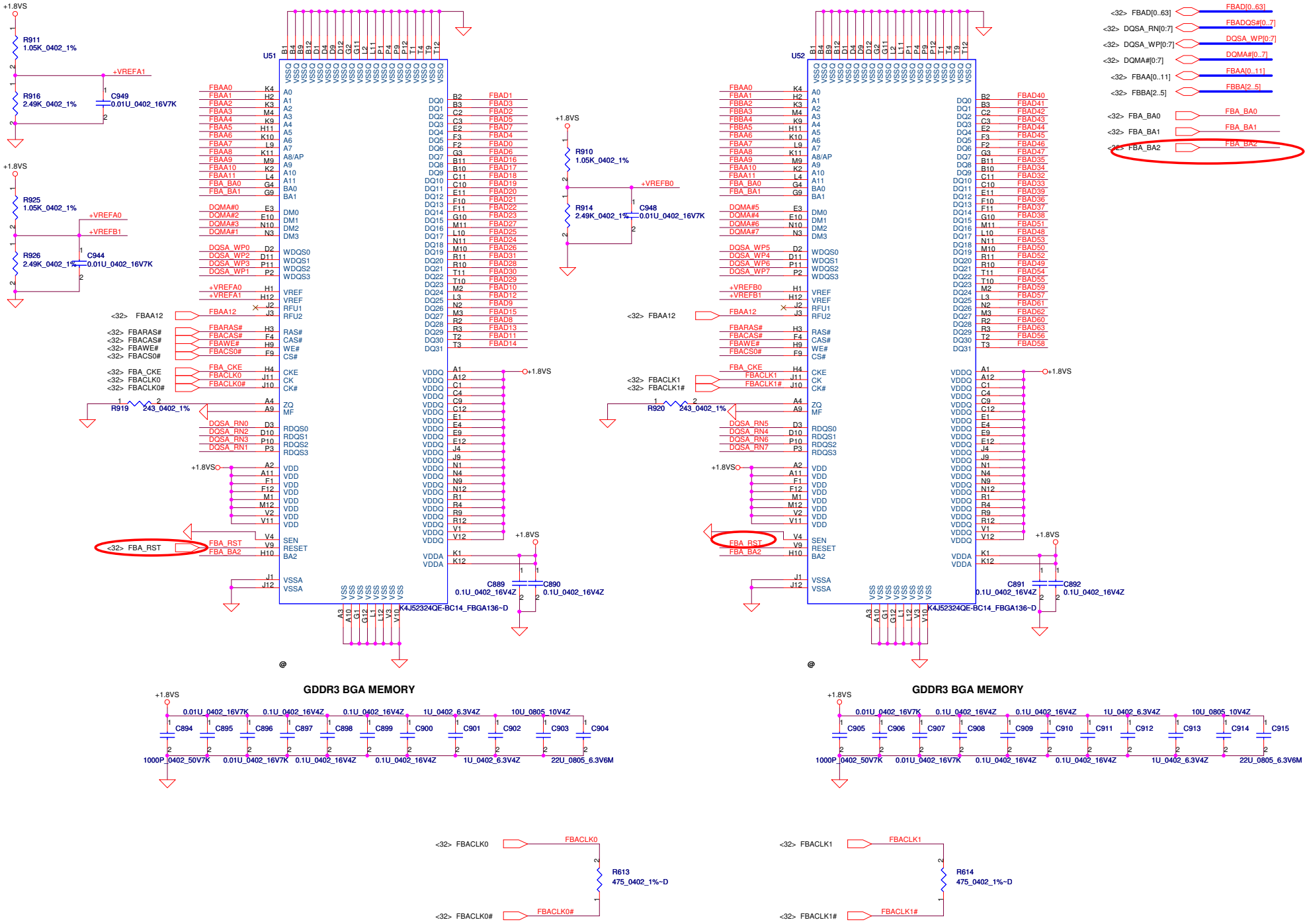

Security Classification	Compal Secret Data		
Issued Date	2007/02/12	Deciphered Date	2008/02/12

THIS SHEET OF ENGINEERING DRAWING IS THE PROPRIETARY PROPERTY OF COMPAL ELECTRONICS, INC. AND CONTAINS CONFIDENTIAL AND TRADE SECRET INFORMATION. THIS SHEET MAY NOT BE TRANSFERED FROM THE CUSTODY OF THE COMPETENT DIVISION OF R&D DEPARTMENT EXCEPT AS AUTHORIZED BY COMPAL ELECTRONICS, INC. NEITHER THIS SHEET NOR THE INFORMATION IT CONTAINS MAY BE USED BY OR DISCLOSED TO ANY THIRD PARTY WITHOUT PRIOR WRITTEN CONSENT OF COMPAL ELECTRONICS, INC.

Compal Electronics, Inc.

Title: **VRAM GDDR3 A**

Size: | Document Number: *LA-4595P* | Rev: 1.0

Date: Tuesday, February 17, 2009 | Sheet 35 of 49

+3VALW to +3VS Transfer

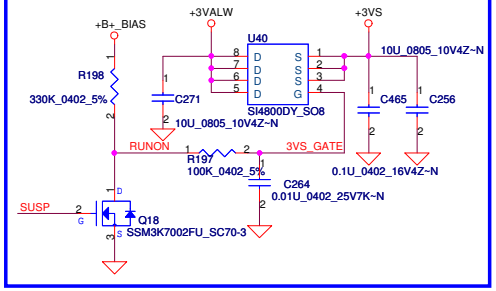

+5VALW to +5VS Transfer

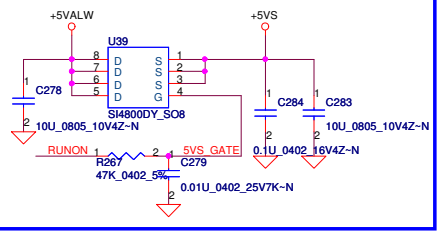

+1.8V to +1.8VS Transfer

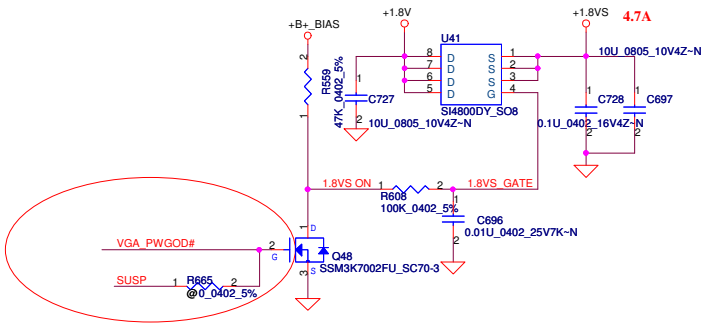

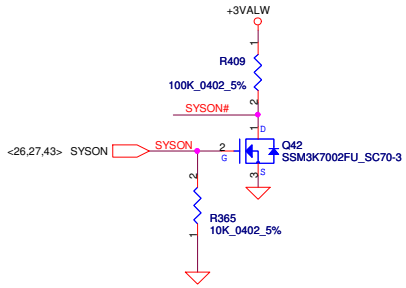

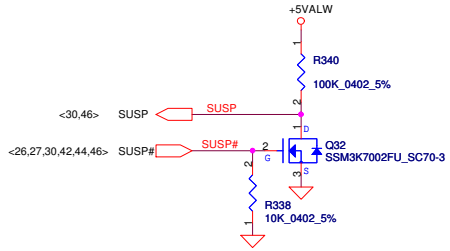

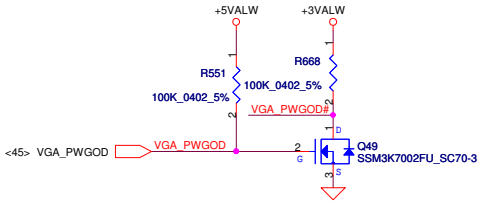

SYSON -> SUSP# -> VGA_ON->VGA_PWGOD

VGA Discharge circuit

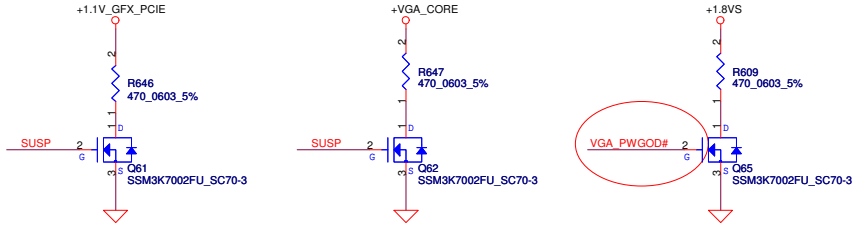

Discharge circuit-1

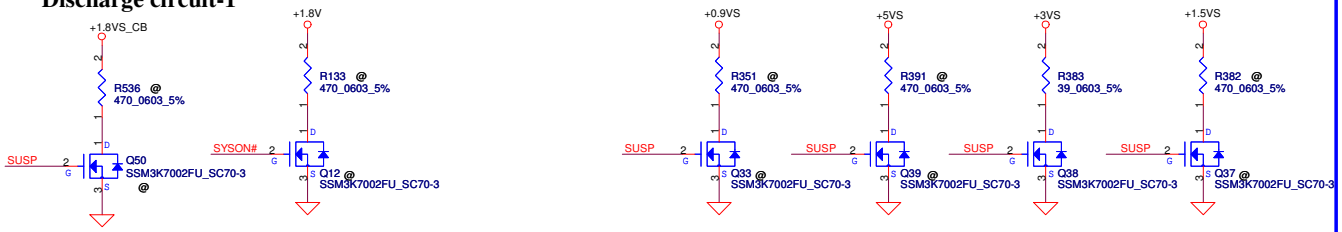

Security Classification	Compal Secret Data		
Issued Date	2007/1/15	Deciphered Date	2008/1/15

THIS SHEET OF ENGINEERING DRAWING IS THE PROPRIETARY PROPERTY OF COMPAL ELECTRONICS, INC. AND CONTAINS CONFIDENTIAL AND TRADE SECRET INFORMATION. THIS SHEET MAY NOT BE TRANSFERRED FROM THE CUSTODY OF THE COMPETENT DIVISION OF R&D DEPARTMENT EXCEPT AS AUTHORIZED BY COMPAL ELECTRONICS, INC. NEITHER THIS SHEET NOR THE INFORMATION IT CONTAINS MAY BE USED BY OR DISCLOSED TO ANY THIRD PARTY WITHOUT PRIOR WRITTEN CONSENT OF COMPAL ELECTRONICS, INC.

Compal Electronics, Inc.

Title: ***DC/DC Circuits***

Size: Custom | Document Number: *LA-4595P* | Rev: 1.0

Date: Tuesday, February 17, 2009 | Sheet 36 of 49

KAL80 POWER UP SEQUENCE

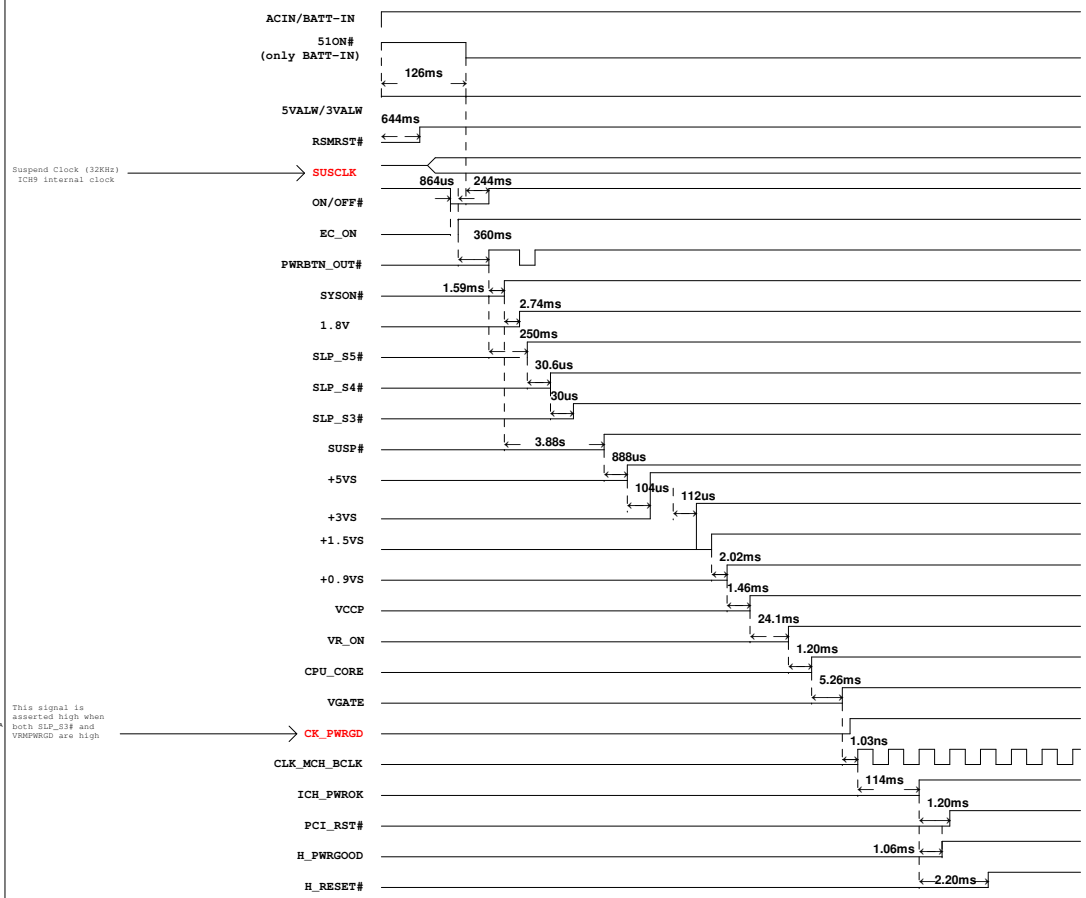

Title	Power Sequence		
Size	Document Number		Rev
Custom	LA-4595P		1.0
Date: Tuesday, February 17, 2009		Sheet 37 of 49	

Version Change List (P. I. R. List)

Item	Page #	Title	Date	Request Owner	Issue Description	Solution Description	Rev.
1		Swap SW1	12/02	EE			
2		Update JUSBP3 pin define	12/02	EE			
3		R405 POP	12/02	EE			
4		U50 unPOP & R1190 POP	12/02	EE			
5		WWAN move to PORT6	12/02	BIOS			
6		Add C1391 & C1392	12/02	NVidia	LVDS single channel issue	Short U59.V2 & U59.V3. Add C1391 C1392 for IFPB_IOVDD	
7		Swap JSPK1 Pin	12/02	EE			
8		R101	12/04	EE	Change to 0805		
9		TPM Con	12/04	EE	Modify to Con		
10		R76 & R78 UnPOP	12/09	EE	EC update to Rev:C1		
11		Q7 & Q9	12/09	EE	Update Q7 & 9 footprint		
12		R658 & R281	12/11	EE	R685 UnPOP & R281 UnPOP for wake on LAN		
13		U89 & WLANPW_DIS#	12/11	EE	Add U89 for wake on LAN. Add WLANPW_DIS# of EC		
14		C1484 & C1485	12/11	EE	C1484 & C1485 modify to 1U form LAN vendor		
15		Update PW schematic	12/12	PW			
16		C260 & C252	12/15	EE	IDT ask UnPop		
17		Add D29 D28	12/15	ESD	ESD for LAN		
18		U9 Pop & U10 UnPop	12/15	ME			
19		Wake On WLAN	12/16	EE	Modify WLANPW_DIS# circuit		
20		Add T49 & T53	12/16	Layout			
21		C696	12/16	EE	Update PN		
22		WLANPW_DIS#	12/17	EE	Move WLANPW_DIS# to EC-GPIO40 and Del BTOP_ON		
23		L42 & L43	12/17	EMI	L42 & L43 update to Bead from 0 ohm		
24		C3 C4 C6 C14 C17	12/17	EMI	POP 100 P		
25		R69	12/17	EE	Update to Bead drom 100 ohm		
26		Cap	12/17	EMI	Add C1469 C1470 C1471 C1472 C1481 R81		
27		D21 D12 D17	12/17	ESD	ESD ask POP		
28		Update PW schematic	12/17	PW			
29		Update Q128 Q130 PN	12/18	EE			
30		Update Board ID	12/18	EE	R231		
31		Add U16 for OZ888	12/18	EE			
32		C1323 POP	12/18	EE	For Kepart		
33		R1421 UnPOP	12/22	EE			
34		C292 C297	12/22	EE	Modify to 22P form 18P (Crystal Vendor)		
35		C1745 C1749	12/22	EE	Modify to 18P form 10P(C1749) and 15P from 10P(C1745)(Crystal Vendor)		
36		C1211	12/22	EE	Modify to 12P form 15P (Crystal Vendor)		
37		R1423 & R1422	01/07	EE	Add for O2		
38		L6 & R1190	01/10	EE	Change to 0805		
39		Modify LDO to +5VS	01/12	EE			
40		Add C80 & D59 & D60	01/12	EE			
41		Add components of JHP1	01/13	EE	For vendor		
42		R360 & R361	01/19	EE	Update R360 & R361 to 56 ohm		
43		U37	01/19	EE	Update U37 to SA00001KN10		
44		R231	01/19	EE	Update Board ID		

Security Classification	Compal Secret Data		
Issued Date	2007/1/15	Deciphered Date	2008/1/15

THIS SHEET OF ENGINEERING DRAWING IS THE PROPRIETARY PROPERTY OF COMPAL ELECTRONICS, INC. AND CONTAINS CONFIDENTIAL AND TRADE SECRET INFORMATION. THIS SHEET MAY NOT BE TRANSFERED FROM THE CUSTODY OF THE COMPETENT DIVISION OF R&D DEPARTMENT EXCEPT AS AUTHORIZED BY COMPAL ELECTRONICS, INC. NEITHER THIS SHEET NOR THE INFORMATION IT CONTAINS MAY BE USED BY OR DISCLOSED TO ANY THIRD PARTY WITHOUT PRIOR WRITTEN CONSENT OF COMPAL ELECTRONICS, INC.

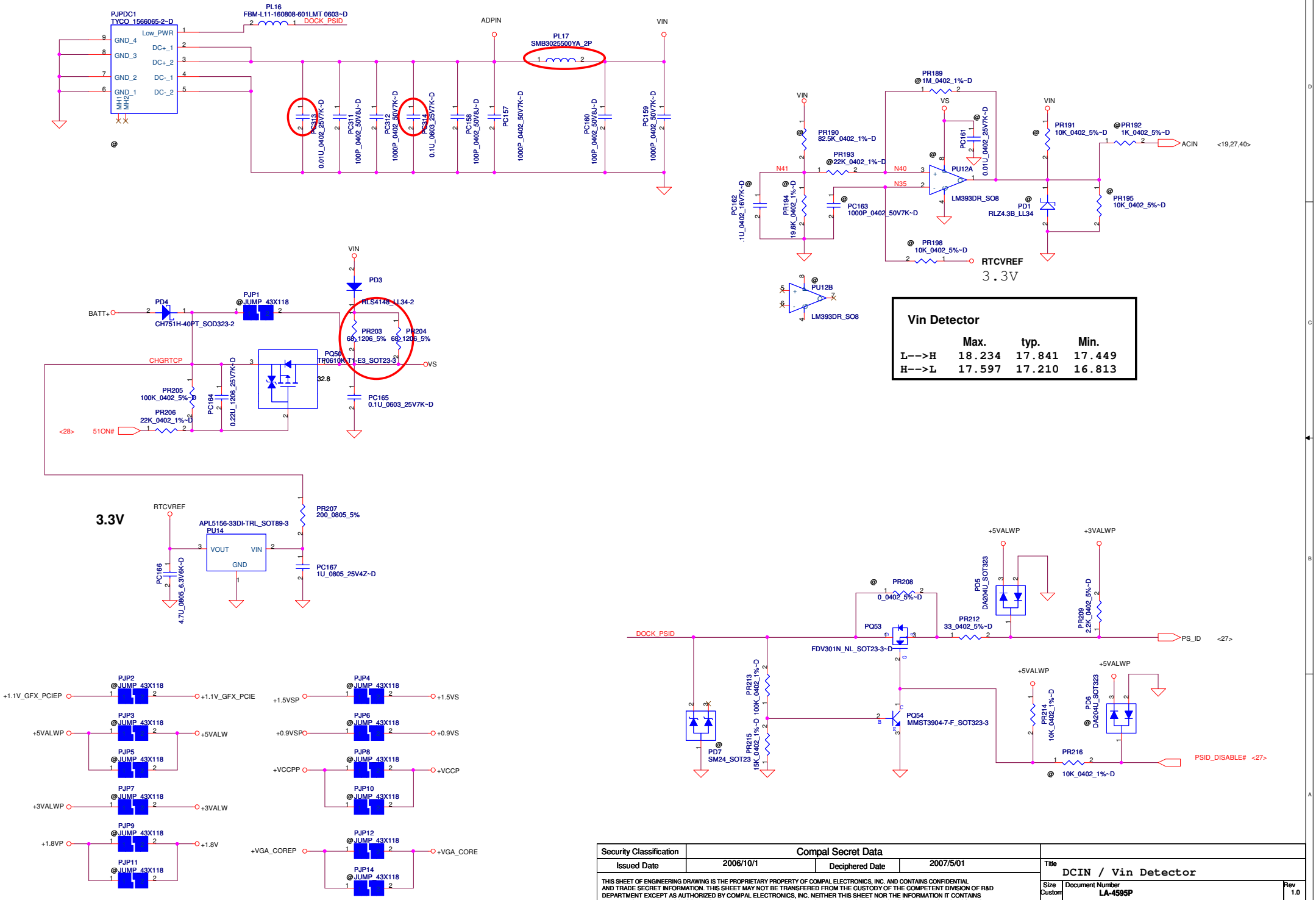

Vin Detector

	Max.	typ.	Min.
L-->H	18.234	17.841	17.449
H-->L	17.597	17.210	16.813

Security Classification	Compal Secret Data		
Issued Date	2006/10/1	Deciphered Date	2007/5/01

THIS SHEET OF ENGINEERING DRAWING IS THE PROPRIETARY PROPERTY OF COMPAL ELECTRONICS, INC. AND CONTAINS CONFIDENTIAL AND TRADE SECRET INFORMATION. THIS SHEET MAY NOT BE TRANSFERED FROM THE CUSTODY OF THE COMPETENT DIVISION OF R&D DEPARTMENT EXCEPT AS AUTHORIZED BY COMPAL ELECTRONICS, INC. NEITHER THIS SHEET NOR THE INFORMATION IT CONTAINS MAY BE USED BY OR DISCLOSED TO ANY THIRD PARTY WITHOUT PRIOR WRITTEN CONSENT OF COMPAL ELECTRONICS, INC.

Title: DCIN / Vin Detector

Size: Custom | Document Number: LA-4595P | Rev: 1.0

Date: Tuesday, February 17, 2009 | Sheet 39 of 49

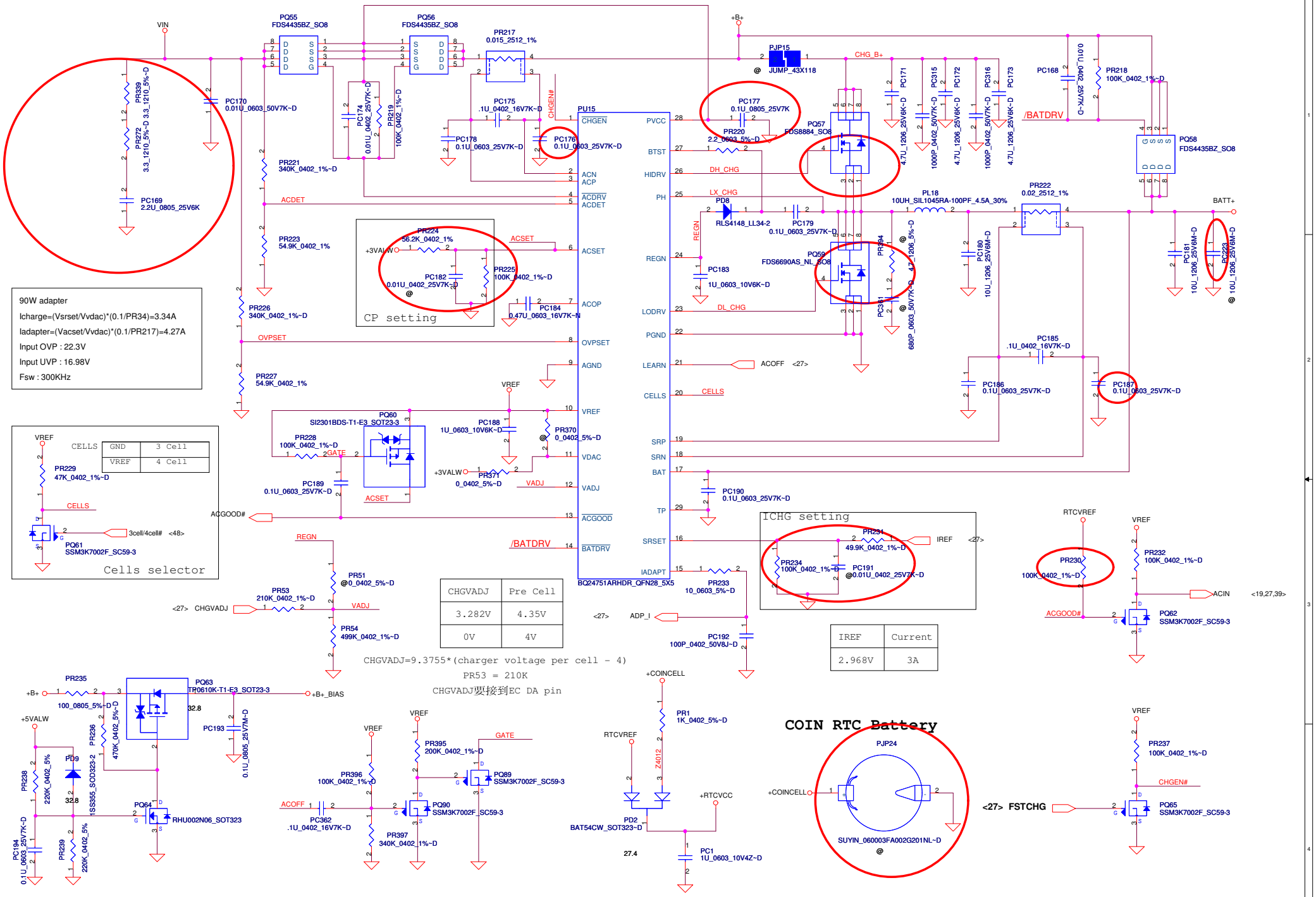

90W adapter

Icharge=(Vsrset/Vvdac)*(0.1/PR34)=3.34A

Iadapter=(Vacset/Vvdac)*(0.1/PR217)=4.27A

Input OVP : 22.3V

Input UVP : 16.98V

Fsw : 300KHz

CHGVADJ	Pre Cell
3.282V	4.35V
0V	4V

IREF	Current
2.968V	3A

Security Classification	Compal Secret Data		
Issued Date	2006/10/1	Deciphered Date	2007/5/01

THIS SHEET OF ENGINEERING DRAWING IS THE PROPRIETARY PROPERTY OF COMPAL ELECTRONICS, INC. AND CONTAINS CONFIDENTIAL AND TRADE SECRET INFORMATION. THIS SHEET MAY NOT BE TRANSFERED FROM THE CUSTODY OF THE COMPETENT DIVISION OF R&D DEPARTMENT EXCEPT AS AUTHORIZED BY COMPAL ELECTRONICS, INC. NEITHER THIS SHEET NOR THE INFORMATION IT CONTAINS MAY BE USED BY OR DISCLOSED TO ANY THIRD PARTY WITHOUT PRIOR WRITTEN CONSENT OF COMPAL ELECTRONICS, INC.

Compal Electronics, Inc.

Title: **Charger/RTC BATTERY**

Size: B | Document Number: KML50 | Rev: 1.0

Date: Tuesday, February 17, 2009 | Sheet 40 of 49

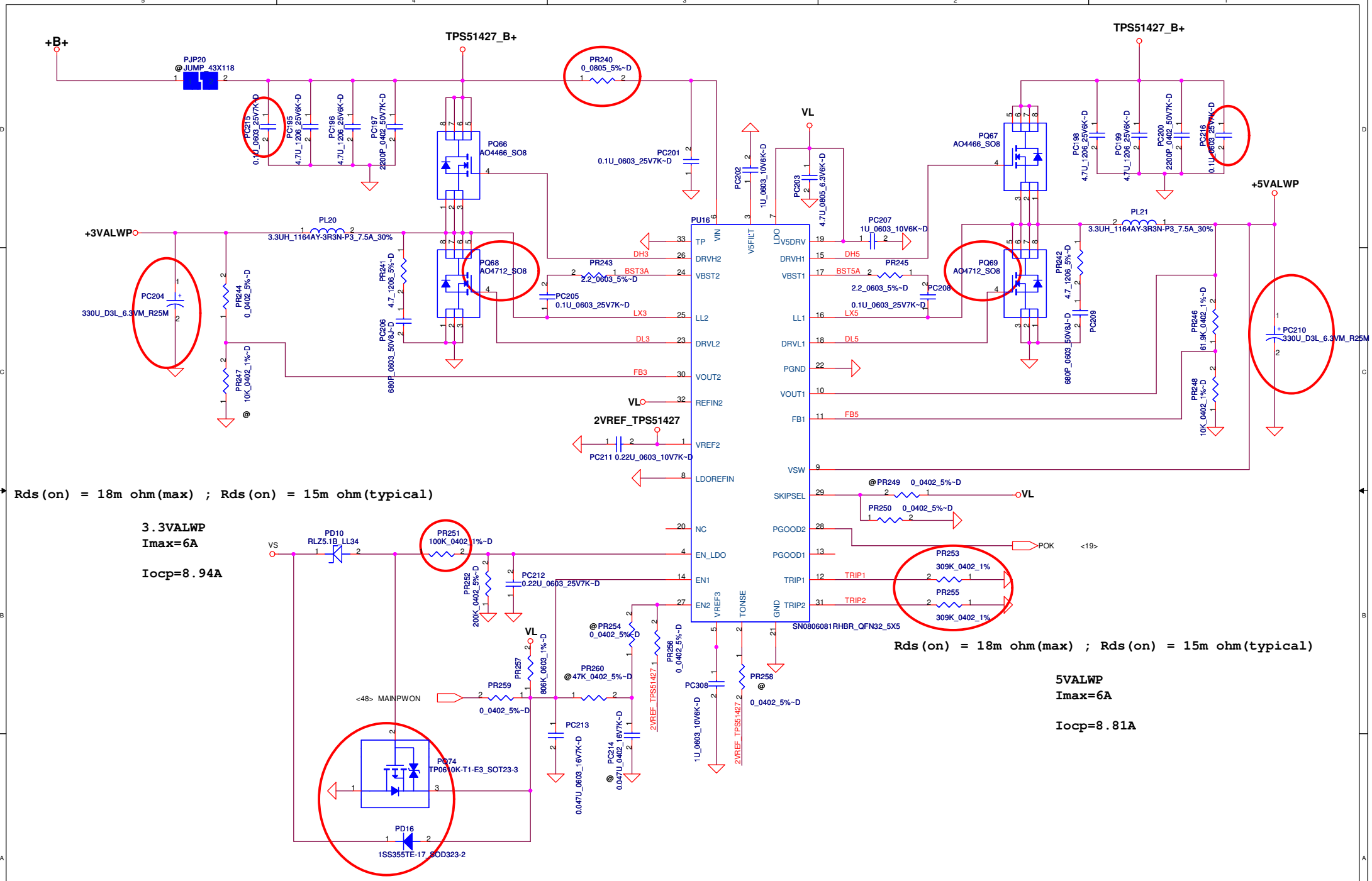

Security Classification	Compal Secret Data		
Issued Date	2006/10/1	Deciphered Date	2007/05/30

THIS SHEET OF ENGINEERING DRAWING IS THE PROPRIETARY PROPERTY OF COMPAL ELECTRONICS, INC. AND CONTAINS CONFIDENTIAL AND TRADE SECRET INFORMATION. THIS SHEET MAY NOT BE TRANSFERED FROM THE CUSTODY OF THE COMPETENT DIVISION OF R&D DEPARTMENT EXCEPT AS AUTHORIZED BY COMPAL ELECTRONICS, INC. NEITHER THIS SHEET NOR THE INFORMATION IT CONTAINS MAY BE USED BY OR DISCLOSED TO ANY THIRD PARTY WITHOUT PRIOR WRITTEN CONSENT OF COMPAL ELECTRONICS, INC.

Compal Electronics, Inc.

Title: +3VALWP, +5VALWP

Size: Custom | Document Number: LA-4595P | Rev: 1.0

Date: Tuesday, February 17, 2009 | Sheet 41 of 49

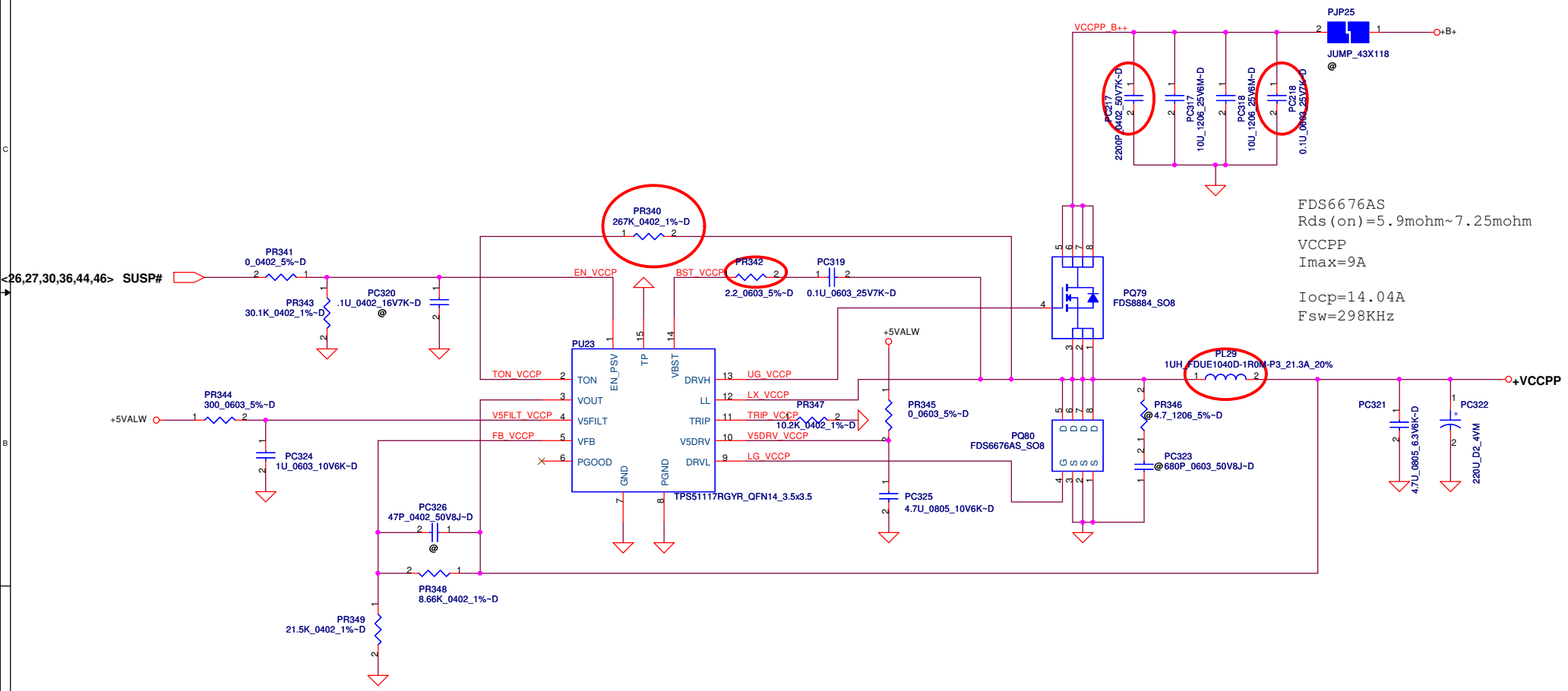

Security Classification	Compal Secret Data		
Issued Date	2008/2/5	Deciphered Date	2009/2/5

THIS SHEET OF ENGINEERING DRAWING IS THE PROPRIETARY PROPERTY OF COMPAL ELECTRONICS, INC. AND CONTAINS CONFIDENTIAL AND TRADE SECRET INFORMATION. THIS SHEET MAY NOT BE TRANSFERED FROM THE CUSTODY OF THE COMPETENT DIVISION OF R&D DEPARTMENT EXCEPT AS AUTHORIZED BY COMPAL ELECTRONICS, INC. NEITHER THIS SHEET NOR THE INFORMATION IT CONTAINS MAY BE USED BY OR DISCLOSED TO ANY THIRD PARTY WITHOUT PRIOR WRITTEN CONSENT OF COMPAL ELECTRONICS, INC.

Compal Electronics, Inc.

Title: +VCCPP

Size | Document Number: LA-4595P | Rev: 1.0

Date: Tuesday, February 17, 2009 | Sheet 42 of 49

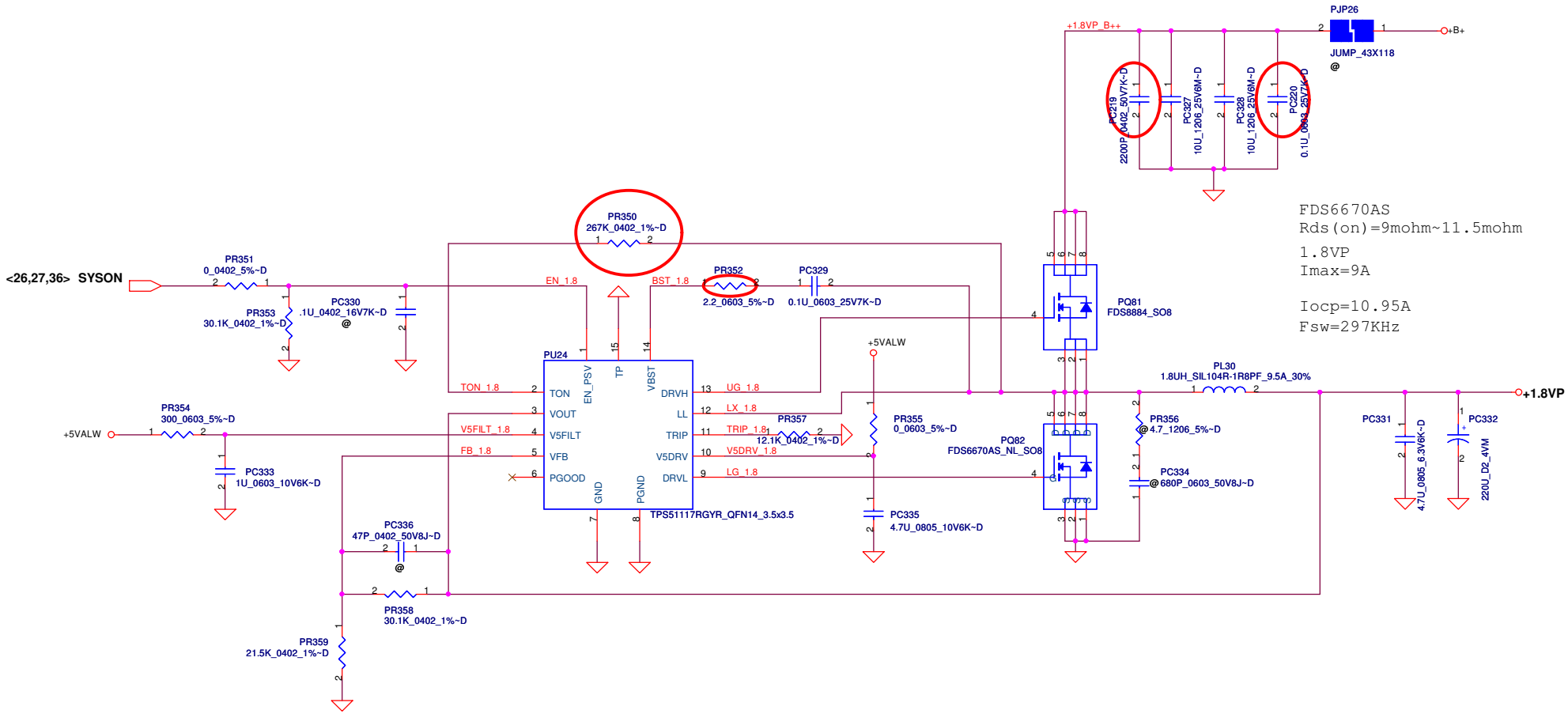

Security Classification	Compal Secret Data		
Issued Date	2006/10/1	Deciphered Date	2007/05/30

THIS SHEET OF ENGINEERING DRAWING IS THE PROPRIETARY PROPERTY OF COMPAL ELECTRONICS, INC. AND CONTAINS CONFIDENTIAL AND TRADE SECRET INFORMATION. THIS SHEET MAY NOT BE TRANSFERED FROM THE CUSTODY OF THE COMPETENT DIVISION OF R&D DEPARTMENT EXCEPT AS AUTHORIZED BY COMPAL ELECTRONICS, INC. NEITHER THIS SHEET NOR THE INFORMATION IT CONTAINS MAY BE USED BY OR DISCLOSED TO ANY THIRD PARTY WITHOUT PRIOR WRITTEN CONSENT OF COMPAL ELECTRONICS, INC.

Compal Electronics, Inc.

Title: +1.8VP

Size | Document Number: LA-4595P | Rev: 1.0

Date: Tuesday, February 17, 2009 | Sheet 43 of 49

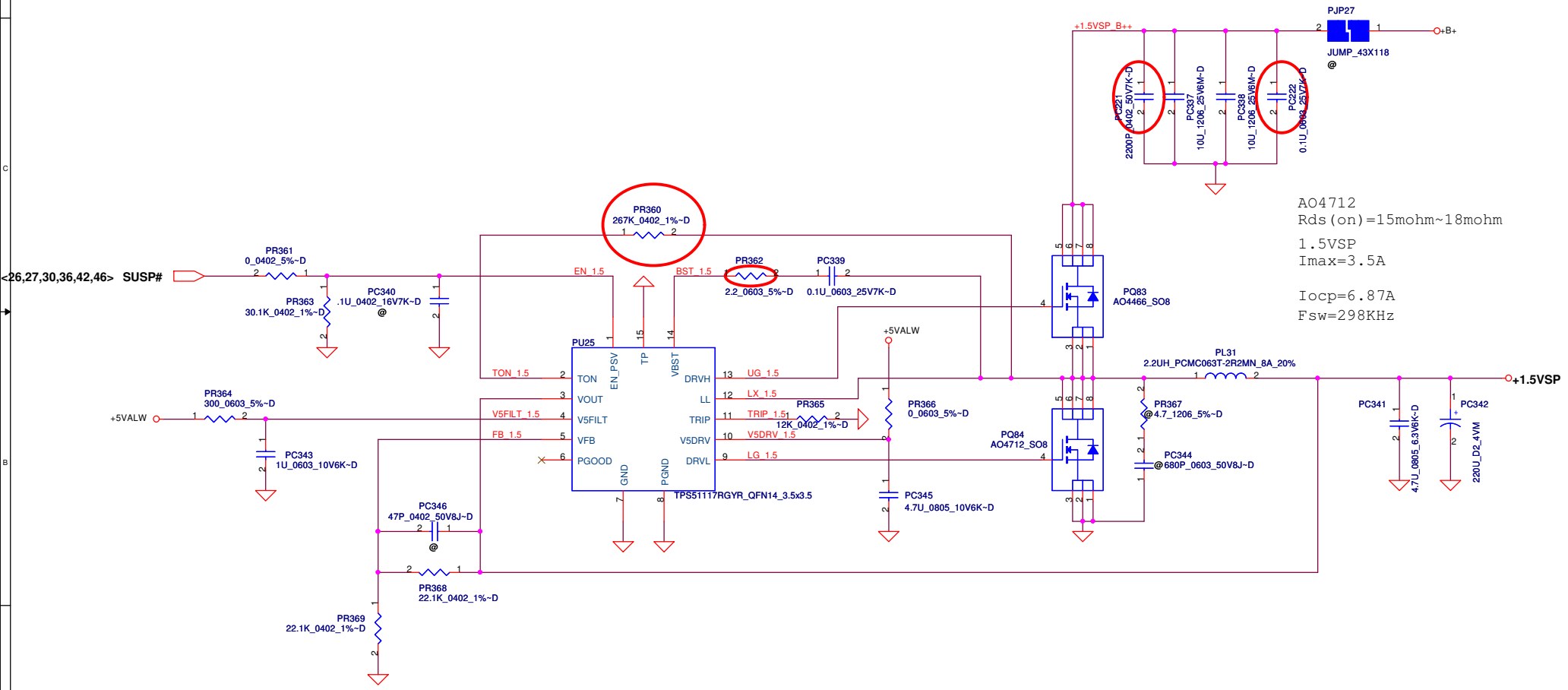

Security Classification	Compal Secret Data		
Issued Date	2008/2/5	Deciphered Date	2009/2/5

THIS SHEET OF ENGINEERING DRAWING IS THE PROPRIETARY PROPERTY OF COMPAL ELECTRONICS, INC. AND CONTAINS CONFIDENTIAL AND TRADE SECRET INFORMATION. THIS SHEET MAY NOT BE TRANSFERED FROM THE CUSTODY OF THE COMPETENT DIVISION OF R&D DEPARTMENT EXCEPT AS AUTHORIZED BY COMPAL ELECTRONICS, INC. NEITHER THIS SHEET NOR THE INFORMATION IT CONTAINS MAY BE USED BY OR DISCLOSED TO ANY THIRD PARTY WITHOUT PRIOR WRITTEN CONSENT OF COMPAL ELECTRONICS, INC.

Compal Electronics, Inc.

Title: +1.5VSP

Size | Document Number: LA-4595P | Rev: 1.0

Date: Tuesday, February 17, 2009 | Sheet 44 of 49

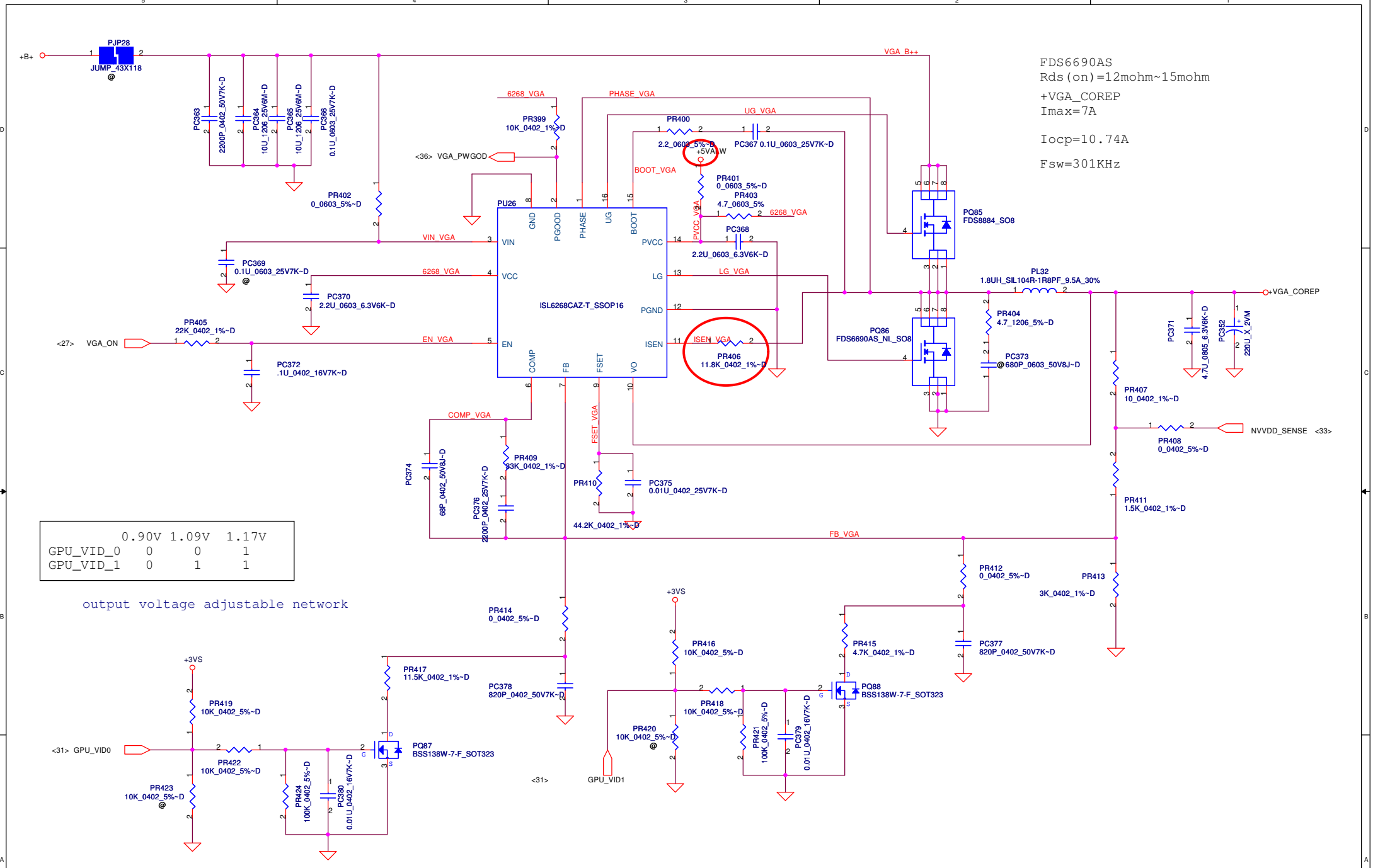

	0.90V	1.09V	1.17V
GPU_VID_0	0	0	1
GPU_VID_1	0	1	1

output voltage adjustable network

Security Classification	Compal Secret Data		
Issued Date	2008/2/5	Deciphered Date	2009/2/5

THIS SHEET OF ENGINEERING DRAWING IS THE PROPRIETARY PROPERTY OF COMPAL ELECTRONICS, INC. AND CONTAINS CONFIDENTIAL AND TRADE SECRET INFORMATION. THIS SHEET MAY NOT BE TRANSFERED FROM THE CUSTODY OF THE COMPETENT DIVISION OF R&D DEPARTMENT EXCEPT AS AUTHORIZED BY COMPAL ELECTRONICS, INC. NEITHER THIS SHEET NOR THE INFORMATION IT CONTAINS MAY BE USED BY OR DISCLOSED TO ANY THIRD PARTY WITHOUT PRIOR WRITTEN CONSENT OF COMPAL ELECTRONICS, INC.

Compal Electronics, Inc.

Title: +VGA_CORE

Size | Document Number: LA-4595P | Rev: 1.0

Date: Tuesday, February 17, 2009 | Sheet 45 of 49

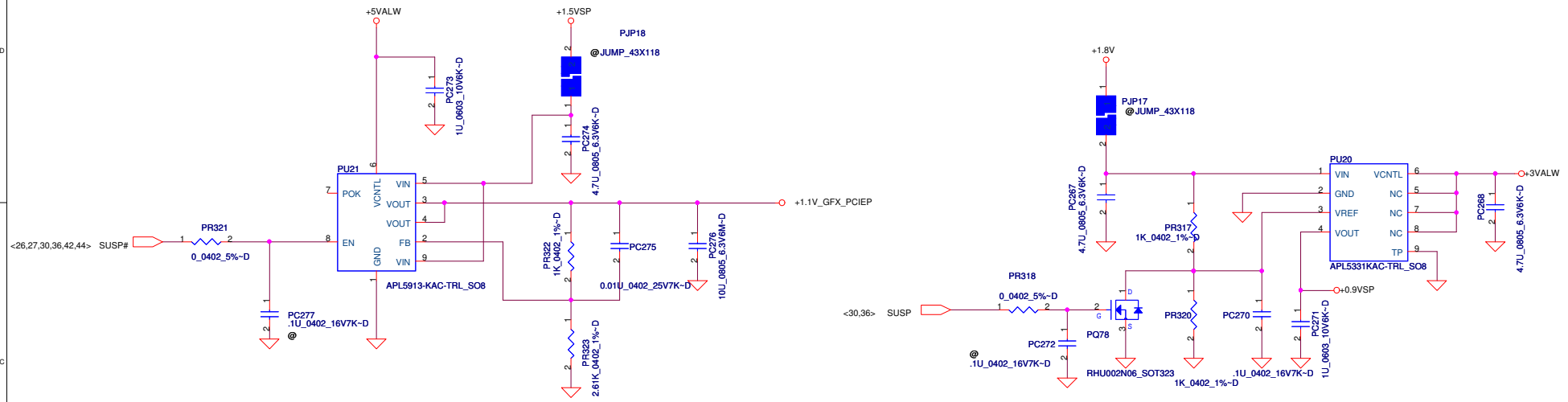

Security Classification	Compal Secret Data			Compal Electronics, Inc.
Issued Date	2005/10/1	Deciphered Date	2007/05/30	Title: +0.9VSP/+1.1V_GFX_PCIEP
				Size: Custom; Document Number: LA-4595P; Rev: 1.0
				Date: Tuesday, February 17, 2009; Sheet 46 of 49

THIS SHEET OF ENGINEERING DRAWING IS THE PROPRIETARY PROPERTY OF COMPAL ELECTRONICS, INC. AND CONTAINS CONFIDENTIAL AND TRADE SECRET INFORMATION. THIS SHEET MAY NOT BE TRANSFERED FROM THE CUSTODY OF THE COMPETENT DIVISION OF R&D DEPARTMENT EXCEPT AS AUTHORIZED BY COMPAL ELECTRONICS, INC. NEITHER THIS SHEET NOR THE INFORMATION IT CONTAINS MAY BE USED BY OR DISCLOSED TO ANY THIRD PARTY WITHOUT PRIOR WRITTEN CONSENT OF COMPAL ELECTRONICS, INC.

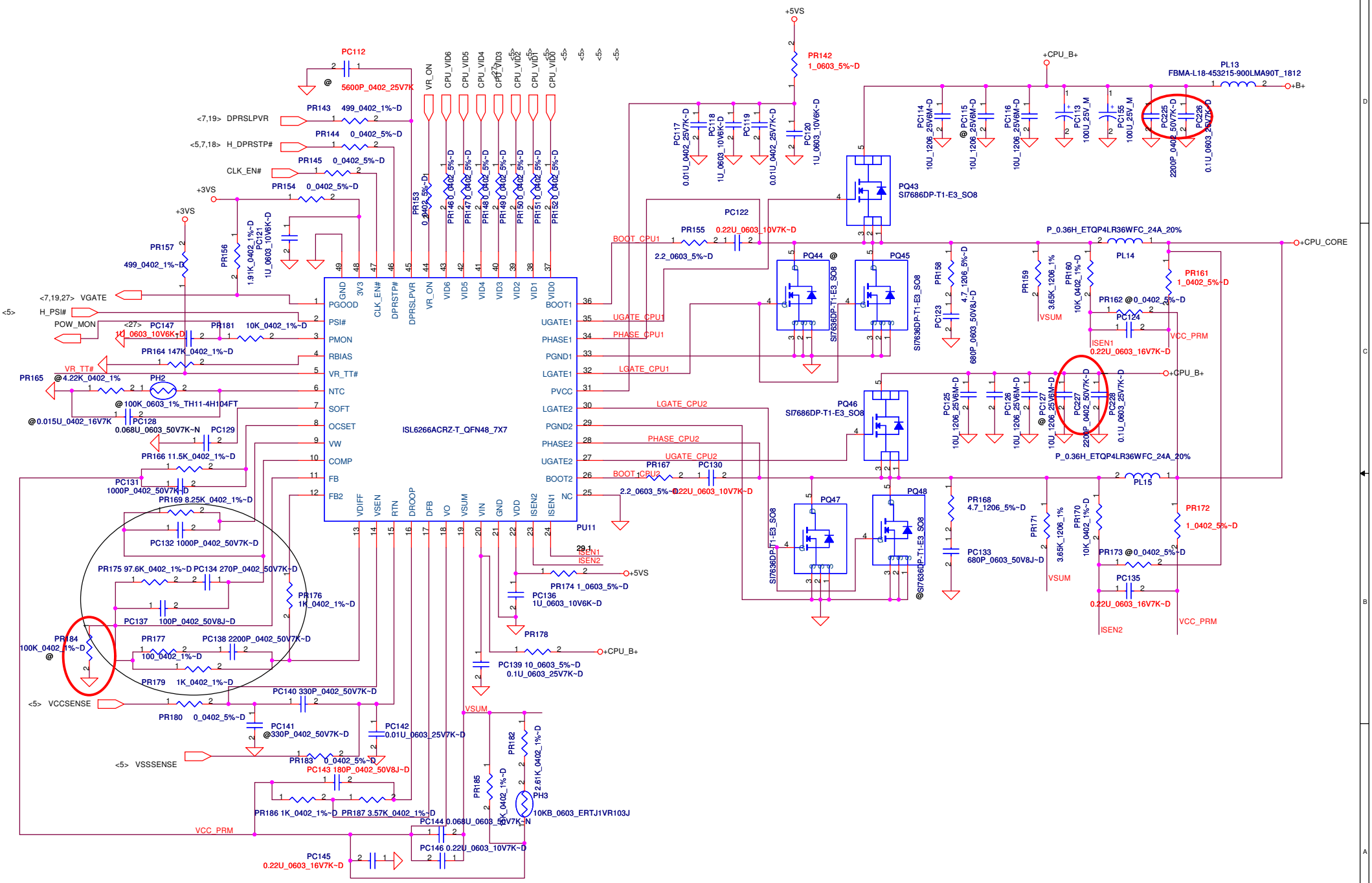

Security Classification	Compal Secret Data		
Issued Date	2007/1/15	Deciphered Date	2008/1/15

THIS SHEET OF ENGINEERING DRAWING IS THE PROPRIETARY PROPERTY OF COMPAL ELECTRONICS, INC. AND CONTAINS CONFIDENTIAL AND TRADE SECRET INFORMATION. THIS SHEET MAY NOT BE TRANSFERED FROM THE CUSTODY OF THE COMPETENT DIVISION OF R&D DEPARTMENT EXCEPT AS AUTHORIZED BY COMPAL ELECTRONICS, INC. NEITHER THIS SHEET NOR THE INFORMATION IT CONTAINS MAY BE USED BY OR DISCLOSED TO ANY THIRD PARTY WITHOUT PRIOR WRITTEN CONSENT OF COMPAL ELECTRONICS, INC.

Compal Electronics, Inc.

Title: **+CPU_CORE**

Size: Custom | Document Number: **LA-4595P** | Rev: 1.0

Date: Tuesday, February 17, 2009 | Sheet 47 of 49

Battery Connect/OTP

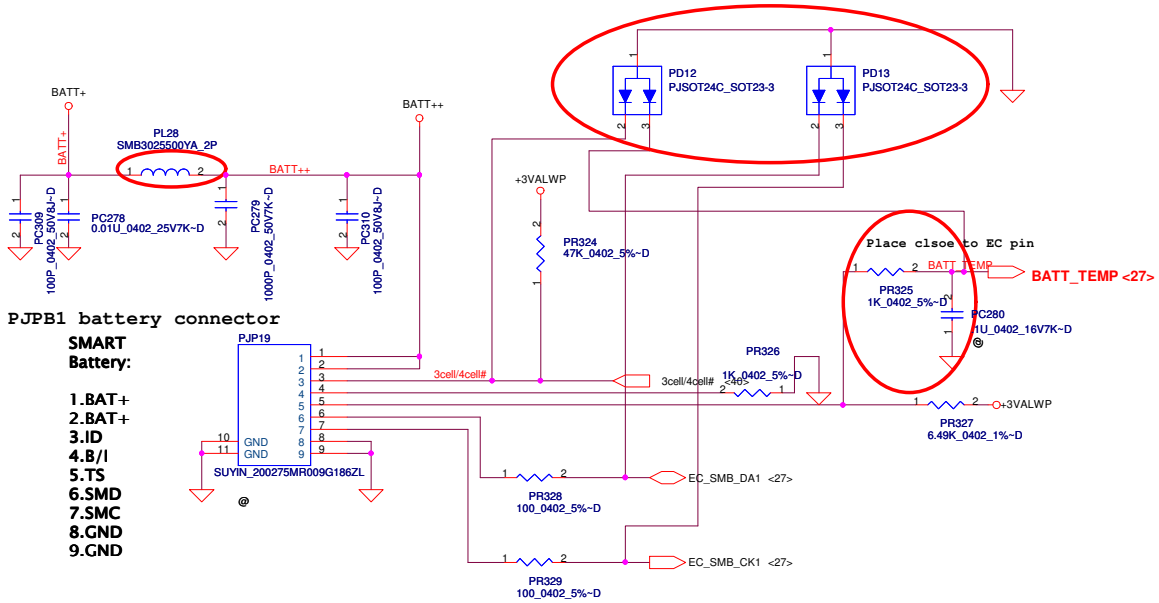

CPU

PH1 under CPU botten side :
CPU thermal protection at 90 +-3 degree C
Recovery at 50 +-3 degree C

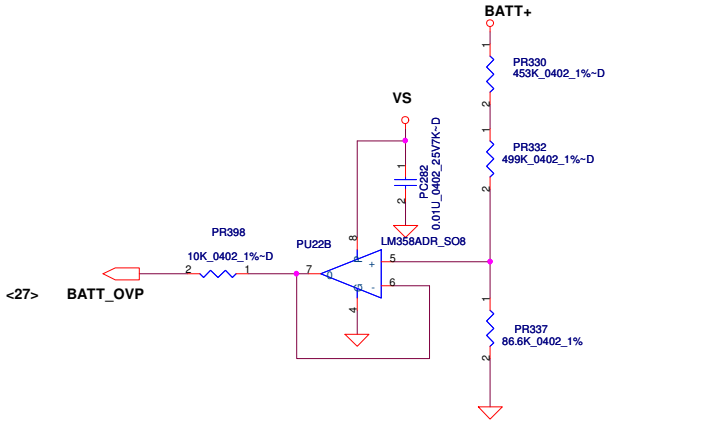

LI-3S :13.5V----BATT-OVP=1.5V
BATT-OVP=0.111*BATT+

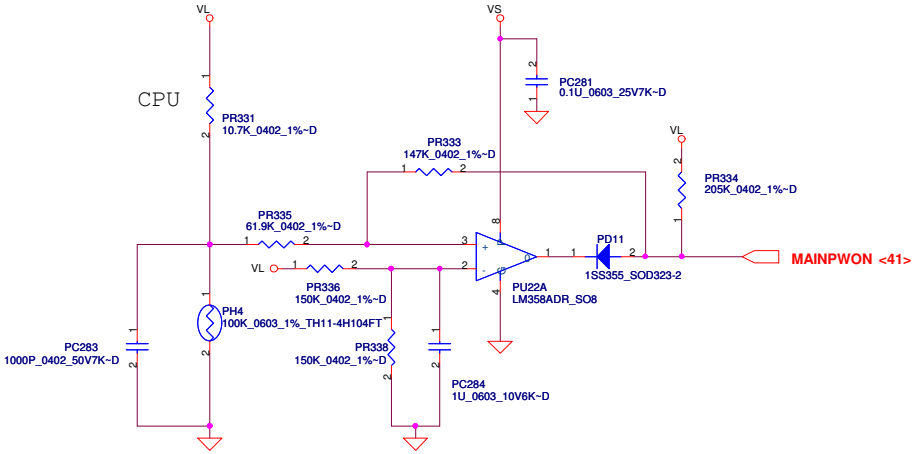

Security Classification	Compal Secret Data			Compal Electronics, Inc.
Issued Date	2005/10/1	Deciphered Date	2007/05/30	Title: BATTERY CONN
				Size: Custom; Document Number: LA-4595P; Rev: 1.0
				Date: Tuesday, February 17, 2009; Sheet 48 of 49

THIS SHEET OF ENGINEERING DRAWING IS THE PROPRIETARY PROPERTY OF COMPAL ELECTRONICS, INC. AND CONTAINS CONFIDENTIAL AND TRADE SECRET INFORMATION. THIS SHEET MAY NOT BE TRANSFERED FROM THE CUSTODY OF THE COMPETENT DIVISION OF R&D DEPARTMENT EXCEPT AS AUTHORIZED BY COMPAL ELECTRONICS, INC. NEITHER THIS SHEET NOR THE INFORMATION IT CONTAINS MAY BE USED BY OR DISCLOSED TO ANY THIRD PARTY WITHOUT PRIOR WRITTEN CONSENT OF COMPAL ELECTRONICS, INC.

Version Change List (P. I. R. List) Page 1/1

Item	Page #	Title	Date	Request Owner	Issue Description	Solution Description	Rev.
1	39	DCIN /Vin Detector	08/12/08	COMPAL	common circuit design modify	change PR203 from 33 to 68 and add PR204 to 68	0.3
2			08/12/08	COMPAL	design modify	change PL17 from SM010018880 to SM010008E10	0.3
3	40	Charger	08/12/08	COMPAL	vendor FAE suggest	change PR272 PR339 from 1 to 3.3	0.3
4	48	BATTERY CONN	08/12/08	COMPAL	design modify	change PL28 from SM010018210 to SM010008E10	0.3
5	39	DCIN /Vin Detector	08/12/12	COMPAL	increase capacitor for EMI request	add PC313 at 0.01uf and PC314 at 0.1uf	0.3
6	42	VCCPP	08/12/12	COMPAL	change resister for EMI request	change PR342 from 0 to 2.2	0.3
7	43	1.8VP	08/12/12	COMPAL	change resister for EMI request	change PR352 from 0 to 2.2	0.3
8	44	1.5VSP	08/12/12	COMPAL	change resister for EMI request	change PR362 from 0 to 2.2	0.3
9							
10							
11							
12							
13							
14							
15							
16							
17							
18							
19							
20							
21							
22							
23							
24							
25							
26							
27							
28							
29							
30							
31							
32							
33							
34							

Security Classification	Compal Secret Data		
Issued Date	2007/1/15	Deciphered Date	2008/1/15

THIS SHEET OF ENGINEERING DRAWING IS THE PROPRIETARY PROPERTY OF COMPAL ELECTRONICS, INC. AND CONTAINS CONFIDENTIAL AND TRADE SECRET INFORMATION. THIS SHEET MAY NOT BE TRANSFERED FROM THE CUSTODY OF THE COMPETENT DIVISION OF R&D DEPARTMENT EXCEPT AS AUTHORIZED BY COMPAL ELECTRONICS, INC. NEITHER THIS SHEET NOR THE INFORMATION IT CONTAINS MAY BE USED BY OR DISCLOSED TO ANY THIRD PARTY WITHOUT PRIOR WRITTEN CONSENT OF COMPAL ELECTRONICS, INC.

Compal Electronics, Inc.

Title: PW PIR-1

Size: Custom | Document Number: LA-4595P | Rev: 1.0

Date: Tuesday, February 17, 2009 | Sheet 49 of 49