GA-8GEM800 Schematics

Revision:1.0

SHEET	TITLE
01	COVER SHEET
02	BOM & PCB MODIFY HISTORY
03	BLOCK DIAGRAM
04	P4_478A
05	P4_478B
06	P4_478C
07	GMCH-BROOKDALE-GE_A
08	GMCH-BROOKDALE-GE_B
09	GMCH-BROOKDALE-GE_C
10	DDR SERIAL TERMINATION
11	DDR1 & DDR2
12	DDR TERM.
13	AGP SLOT
14	ICH4_1
15	ICH4_2
16	FWH
17	ICS950223AF CLOCK GEN
18	PCI1 & PCI2 SLOT
19	PCI3 SLOT
20	LPC IO ITE 8712 & FLOPPY & FAN
21	FRONT USB2.0
22	FRONT PANEL
23	IDE CONNECTOR

SHEET	TITLE
24	PS/2 K/B & M/S
25	COM & PRT PORT
26	AC97 CODEC
27	LINE OUT/IN/MIC/FRONT AUDIO & GAME
28	VGA CONNECTOR
29	MISC. PWR & ATX POWER
30	VCORE PWM
31	DDR POWER
32	REALTEK 8100C

GIGABYTE

Title: COVER SHEET		
Size: Custom	Document Number: GA-8GEM800	Rev: 1.0
Date: 星期五, 八月 20, 2004	Sheet 1 of 32	

Model Name: GA-8GEM800

Version: 1.0

24.3cm X 22.0cm 60+-15% C Type

Component value change history

PAGE	Change Item	Reason
0.1	Modify from GA-8GEM667 REV1.0F BOM	
	First release	
1.0A	For PVT BOM	
	Remove PWM heat sink	
	Remove Prochot BOM	
	Add EMI solution	
1.0B	Remove CC40:10P/6	Modify EMI issue.
	R722:8.2K/6 change to 1K/6.	Modify FUSEVCC protect issue.

Circuit or PCB layout change for next version

鴻達,慶生,統盟

PAGE	Change Item	Reason
0.1	Modify from GA-8GEM667 REV1.0	
1.0	For PVT PCB	

GIGABYTE

Title	BOM & PCB MODIFY HISTORY	
Size Custom	Document Number GA-8GEM800	Rev 1.0
Date: 星期五, 八月 20, 2004	Sheet 2 of 32	

BLOCK DIAGRAM

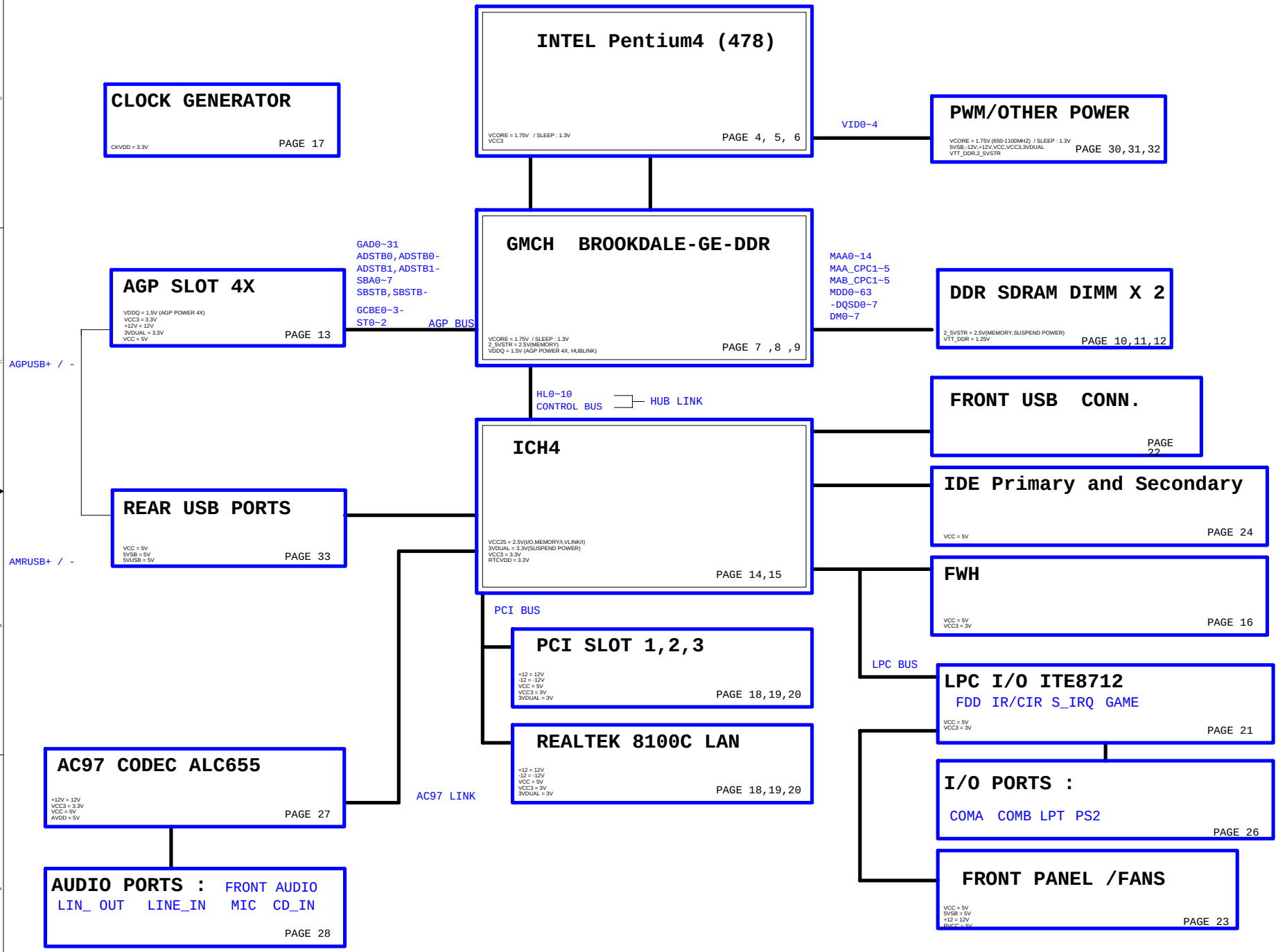

GIGABYTE		
Title: BOM & PCB MODIFY HISTORY		
Size: Custom	Document Number: GA-8GEM800	Rev: 1.0
Date: 星期五, 八月 20, 2004	Sheet 3 of 32	

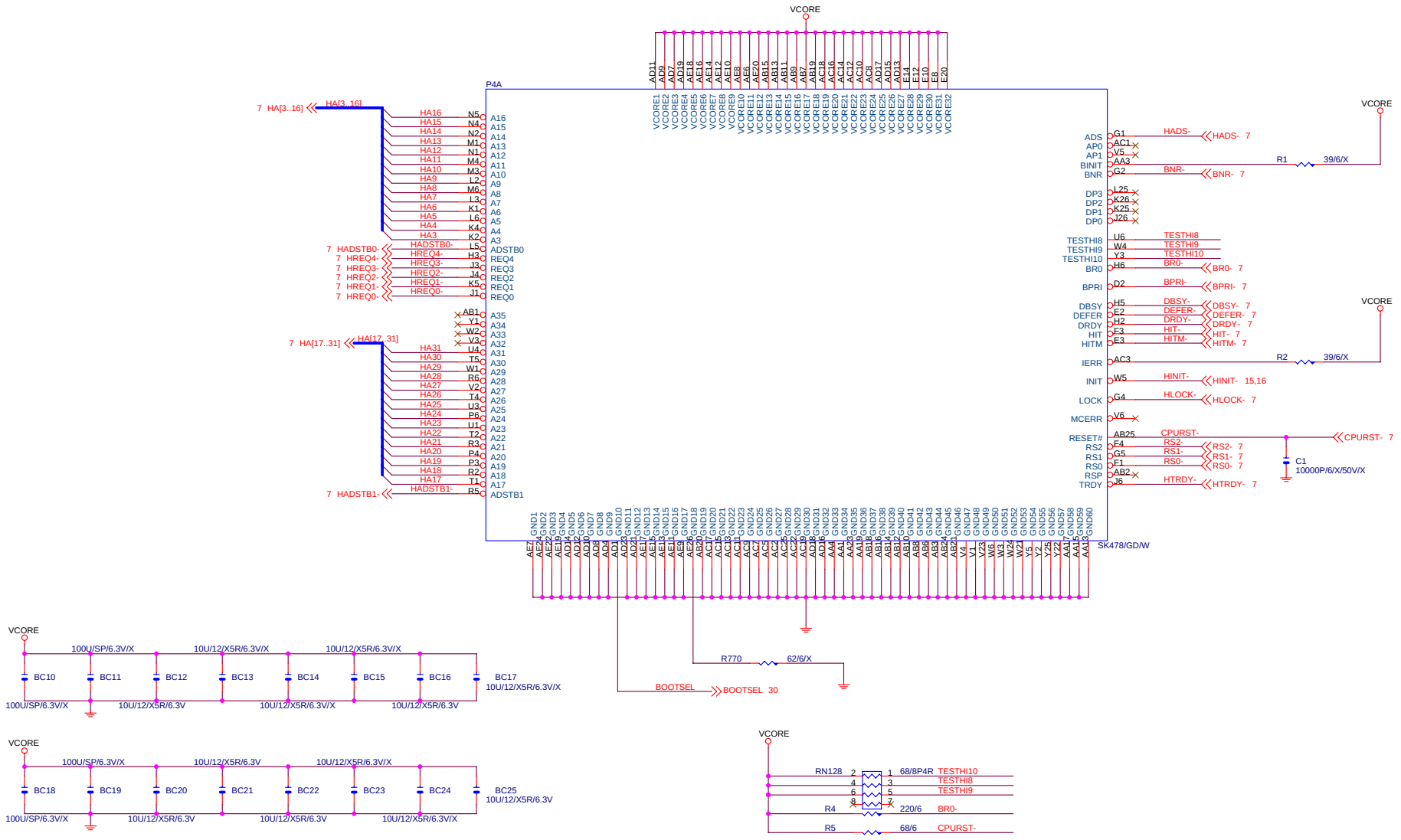

Title	P4 478A
Size: Custom	Document Number: GA-8GEM800
Rev	1.0
Date: 星期五, 八月 20, 2004	Sheet 4 of 32

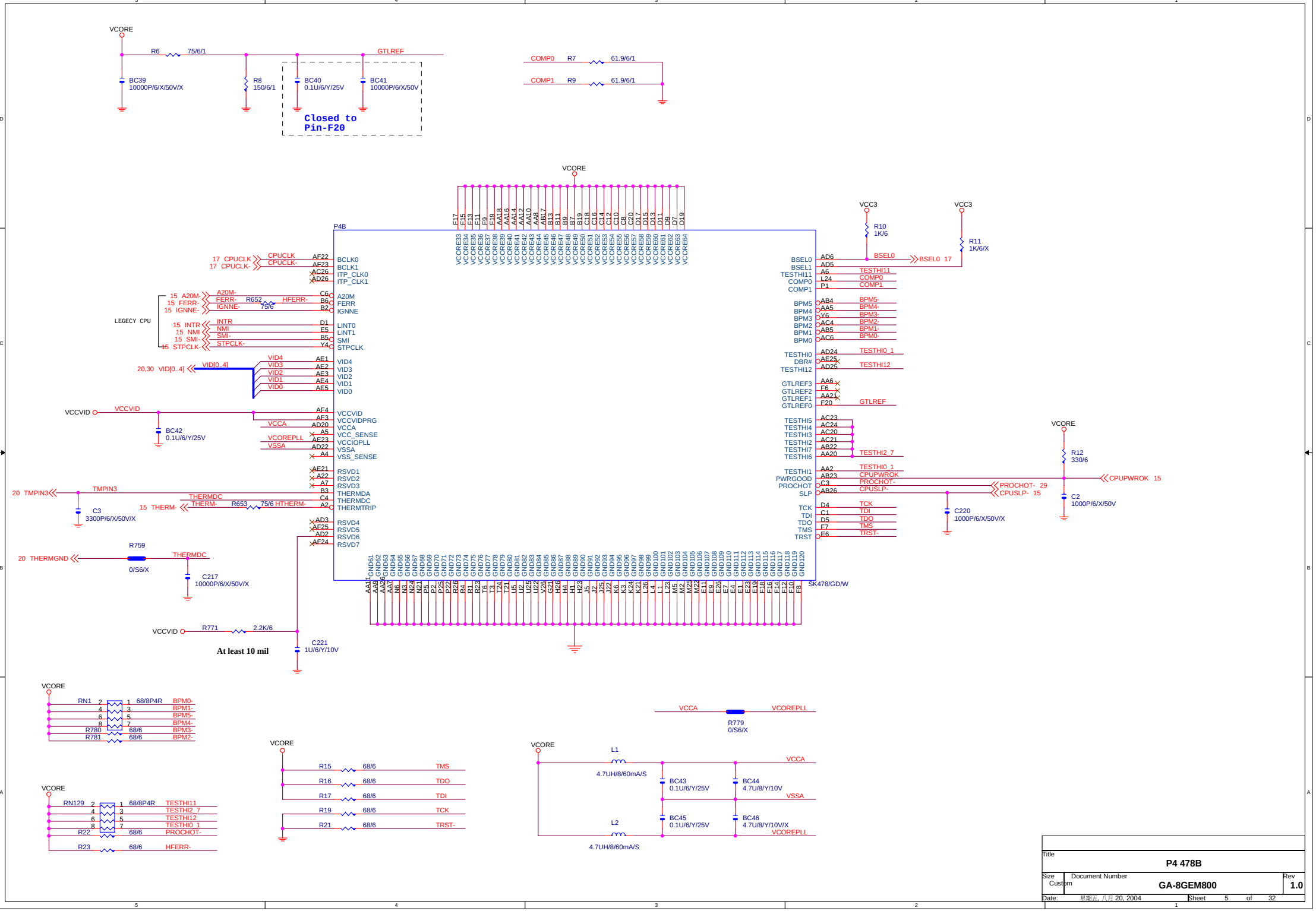
VCORE
R6 75/6/1
GTLREF
BC39 10000P/6/X/50V/X
R8 150/6/1
BC40 0.1U/6/Y/25V
BC41 10000P/6/X/50V
Closed to Pin-F20
COMP0 R7 61.9/6/1
COMP1 R9 61.9/6/1
P4B
SK478/GD/W
VCC3
R10 1K/6
R11 1K/6/X
BSEL0
TESTHI11
COMP0
COMP1
BPM5-
BPM4-
BPM3-
BPM2-
BPM1-
BPM0-
TESTHI0_1
TESTHI12
TESTHI2_7
CPUPWROK
PROCHOT-
CPUSLP-
TCK
TDI
TDO
TMS
TRST-
R12 330/6
C2 1000P/6/X/50V
C220 1000P/6/X/50V/X
17 CPUCLK
17 CPUCLK-
CPUCLK
CPUCLK-
BCLK0
BCLK1
ITP_CLK0
ITP_CLK1
15 A20M-
15 FERR-
15 IGNNE-
A20M-
FERR-
IGNNE-
R652 75/6
HFERR-
A20M
FERR
IGNNE
LEGECY CPU
15 INTR
15 NMI
15 SMI-
15 STPCLK-
INTR
NMI
SMI-
STPCLK-
LINT0
LINT1
SMI
STPCLK
20,30 VID[0..4]
VID[0..4]
VID4
VID3
VID2
VID1
VID0
VCCVID
BC42 0.1U/6/Y/25V
VCCA
VCOREPLL
VSSA
VCC_SENSE
VCCIOPLL
VSS_SENSE
RSVD1
RSVD2
RSVD3
RSVD4
RSVD5
RSVD6
RSVD7
20 TMPIN3
TMPIN3
C3 3300P/6/X/50V/X
THERMDC
15 THERM-
THERM-
R653 75/6
HTHERM-
THERMDA
THERMTRIP
20 THERMGND
R759 0/S6/X
C217 10000P/6/X/50V/X
R771 2.2K/6
C221 1U/6/Y/10V
At least 10 mil
RN1 68/8P4R
R780 68/6
R781 68/6
BPM0-
BPM1-
BPM5-
BPM4-
BPM3-
BPM2-
RN129 68/8P4R
R22 68/6
R23 68/6
TESTHI11
TESTHI2_7
TESTHI12
TESTHI0_1
PROCHOT-
HFERR-
R15 68/6
R16 68/6
R17 68/6
R19 68/6
R21 68/6
TMS
TDO
TDI
TCK
TRST-
VCCA
VCOREPLL
R779 0/S6/X
L1 4.7UH/8/60mA/S
L2 4.7UH/8/60mA/S
BC43 0.1U/6/Y/25V
BC44 4.7U/8/Y/10V
BC45 0.1U/6/Y/25V
BC46 4.7U/8/Y/10V/X
Title
P4 478B
Size
Custom
Document Number
GA-8GEM800
Rev
1.0
Date: 星期五, 八月 20, 2004
Sheet 5 of 32

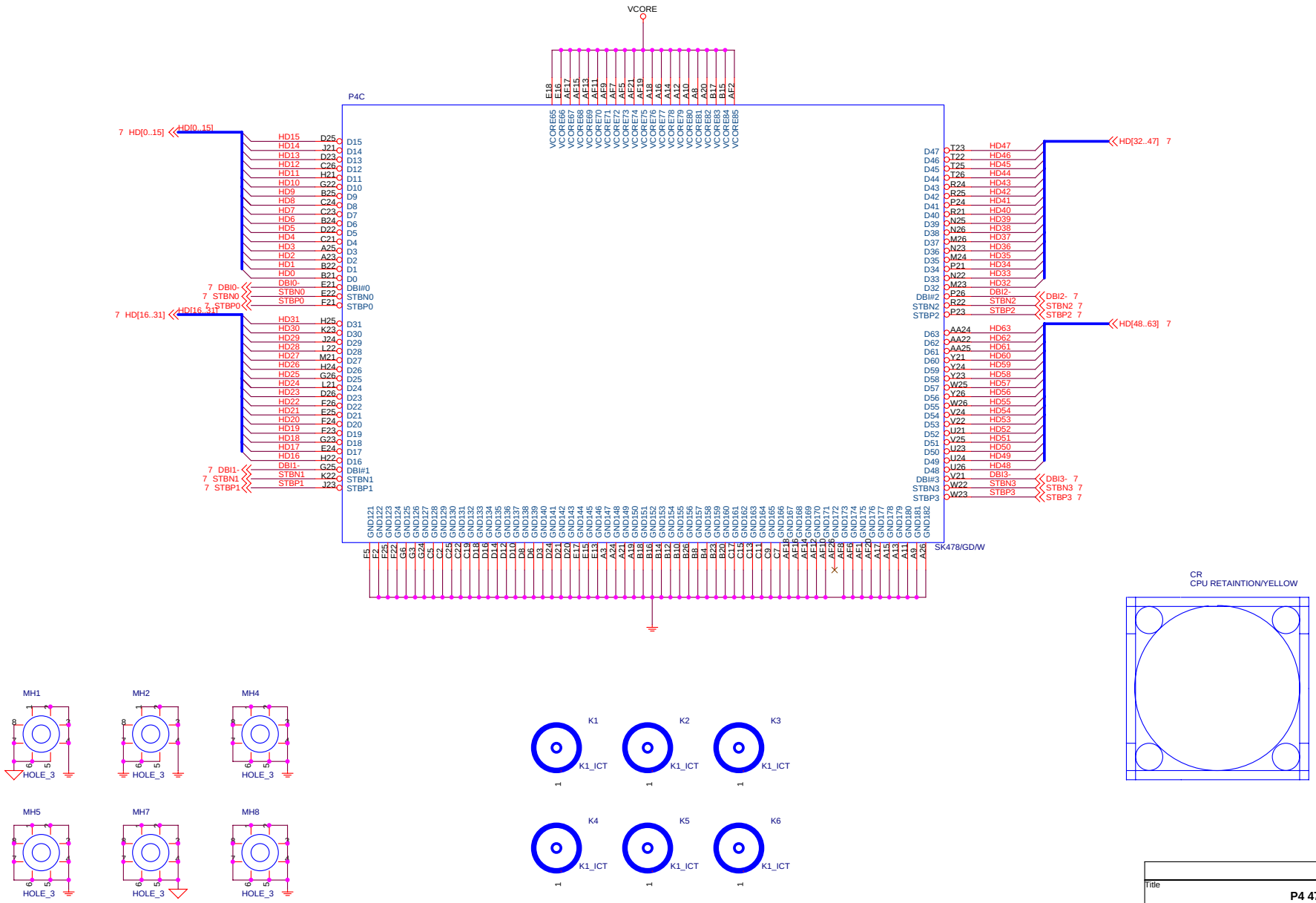

Title	P4 478C
Size	Custom
Document Number	GA-8GEM800
Rev	1.0
Date:	星期五, 八月 20, 2004
Sheet	6 of 32

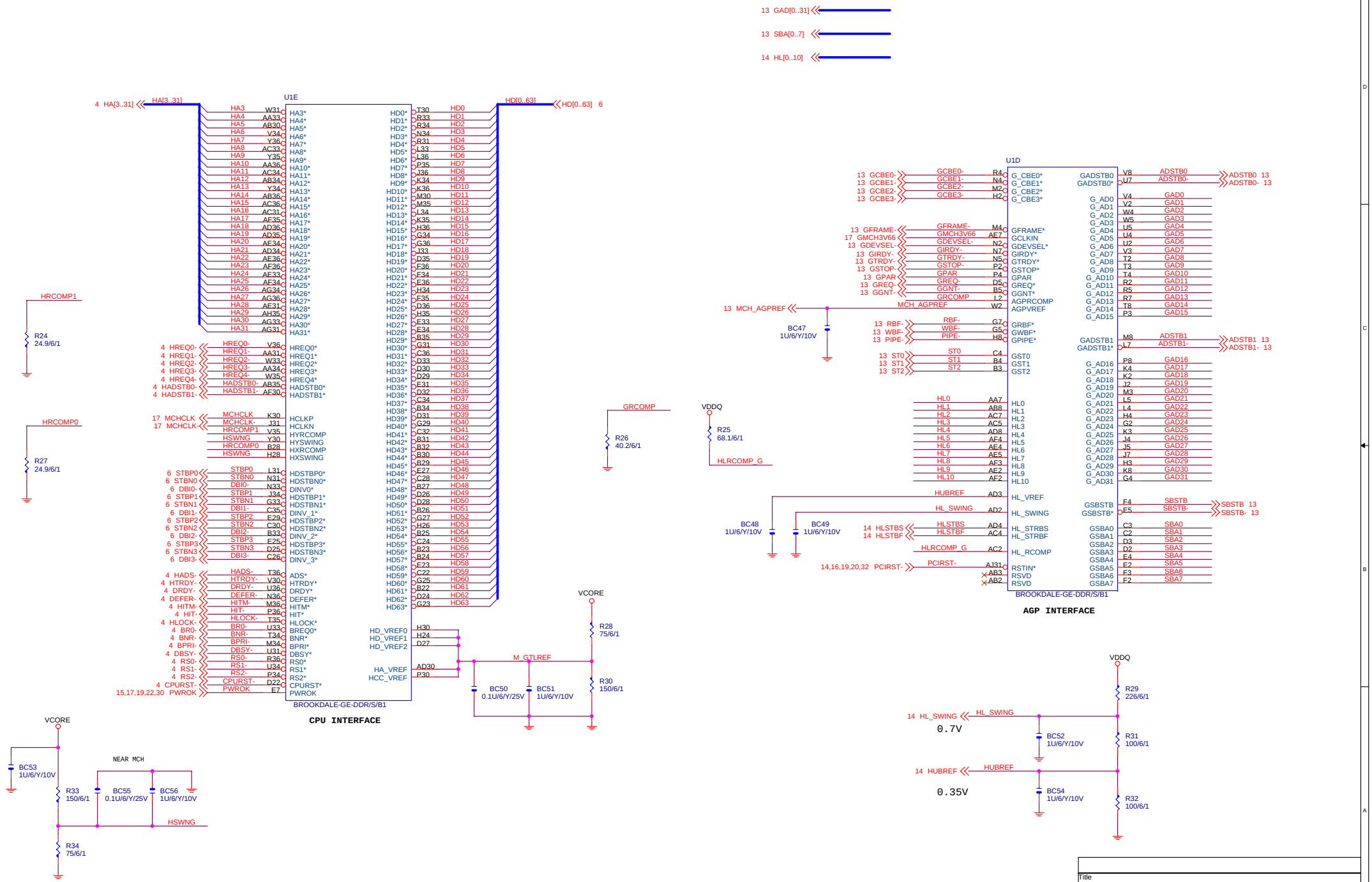

Title	BROOKDALE-G_A
Size: Custom	Document Number: GA-8GEM800
Rev	1.0
Date: 星期五, 八月 20, 2004	Sheet 7 of 32

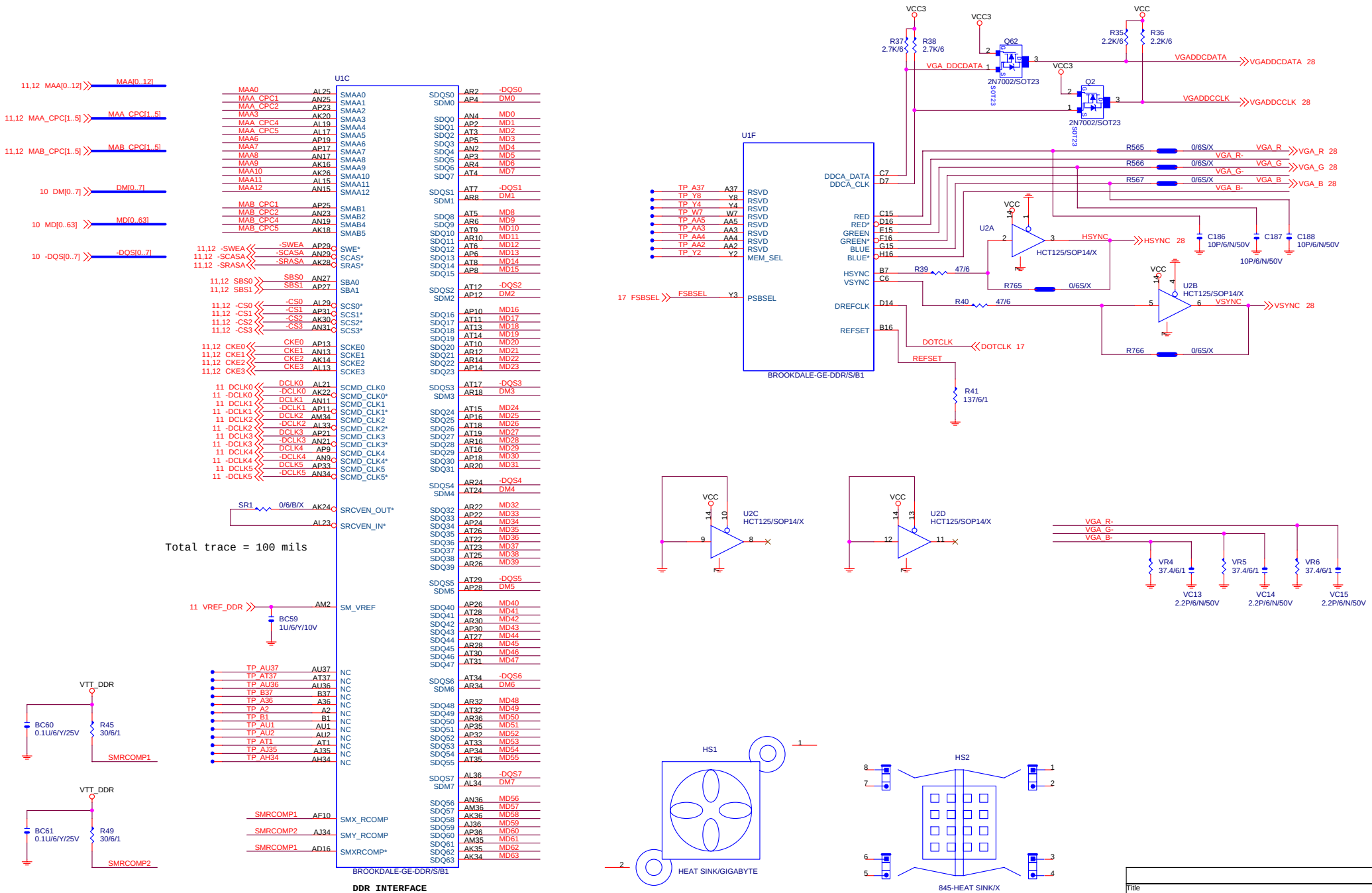

Title	BROOKDALE-G_B
Size	Custom
Document Number	GA-8GEM800
Rev	1.0
Date:	星期五, 八月 20, 2004
Sheet	8 of 32

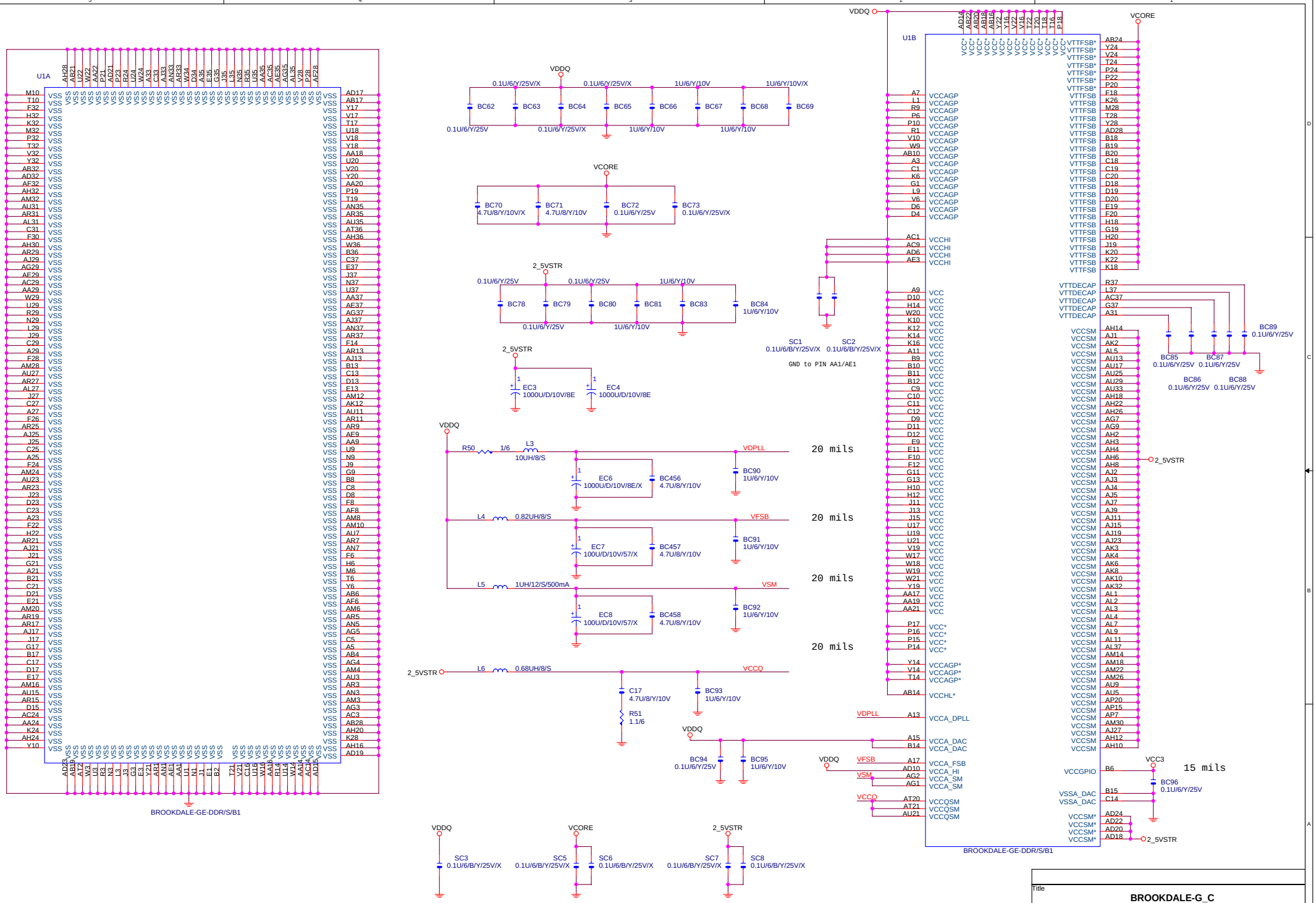

Title
BROOKDALE-G_C

Size: Custom | Document Number: **GA-8GEM800** | Rev: **1.0**

Date: 星期五, 八月 20, 2004 | Sheet 9 of 32

11,12 MD_[0..63] MD[0..63] 8

11,12 DM_[0..7] DM[0..7] 8

11,12 -DQS_[0..7] -DQS[0..7] 8

DM_0	RN3	1	2	0/8P4R/X	DM0
-DQS_0		3	4		-DQS0
MD_2		5	6		MD2
MD_6		7	8		MD6
MD_0	RN5	1	2	0/8P4R/X	MD0
MD_4		3	4		MD4
MD_5		5	6		MD5
MD_1		7	8		MD1
MD_12	RN6	1	2	0/8P4R/X	MD12
MD_13		3	4		MD13
-DQS_1		5	6		-DQS1
DM_1		7	8		DM1
MD_14	RN7	1	2	0/8P4R/X	MD14
MD_15		3	4		MD15
MD_10		5	6		MD10
MD_11		7	8		MD11
-DQS_2	RN9	1	2	0/8P4R/X	-DQS2
DM_2		3	4		DM2
MD_18		5	6		MD18
MD_22		7	8		MD22
MD_29	RN11	1	2	0/8P4R/X	MD29
MD_25		3	4		MD25
-DQS_3		5	6		-DQS3
DM_3		7	8		DM3
MD_26	RN12	1	2	0/8P4R/X	MD26
MD_30		3	4		MD30
MD_27		5	6		MD27
MD_31		7	8		MD31
MD_32	RN13	1	2	0/8P4R/X	MD32
MD_36		3	4		MD36
MD_33		5	6		MD33
MD_37		7	8		MD37
MD_39	RN14	1	2	0/8P4R/X	MD39
MD_35		3	4		MD35
MD_40		5	6		MD40
MD_44		7	8		MD44
-DQS_4	RN15	1	2	0/8P4R/X	-DQS4
DM_4		3	4		DM4
MD_34		5	6		MD34
MD_38		7	8		MD38
MD_45	RN16	1	2	0/8P4R/X	MD45
MD_41		3	4		MD41
DM_5		5	6		DM5
-DQS_5		7	8		-DQS5
MD_48	RN17	1	2	0/8P4R/X	MD48
MD_49		3	4		MD49
MD_52		5	6		MD52
MD_53		7	8		MD53
MD_50	RN18	1	2	0/8P4R/X	MD50
MD_51		3	4		MD51
MD_60		5	6		MD60
MD_61		7	8		MD61
DM_6	RN19	1	2	0/8P4R/X	DM6
-DQS_6		3	4		-DQS6
MD_54		5	6		MD54
MD_55		7	8		MD55
MD_56	RN20	1	2	0/8P4R/X	MD56
MD_57		3	4		MD57
DM_7		5	6		DM7
-DQS_7		7	8		-DQS7
MD_59	RN21	7	8	0/8P4R/X	MD59
MD_63		5	6		MD63
MD_58		3	4		MD58
MD_62		1	2		MD62

MD_20	RN2	1	2	0/8P4R/X	MD20
MD_16		3	4		MD16
MD_17		5	6		MD17
MD_21		7	8		MD21
MD_42	RN4	1	2	0/8P4R/X	MD42
MD_46		3	4		MD46
MD_43		5	6		MD43
MD_47		7	8		MD47

MD_7	RN8	1	2	0/8P4R/X	MD7
MD_3		3	4		MD3
MD_8		5	6		MD8
MD_9		7	8		MD9
MD_19	RN10	1	2	0/8P4R/X	MD19
MD_23		3	4		MD23
MD_24		5	6		MD24
MD_28		7	8		MD28

2_5VSTR

BC97	0.1U/6/Y/25V
BC98	0.1U/6/Y/25V/X
BC99	0.1U/6/Y/25V/X
BC100	0.1U/6/Y/25V/X
BC101	0.1U/6/Y/25V/X
BC102	0.1U/6/Y/25V/X
BC103	0.1U/6/Y/25V/X
BC104	0.1U/6/Y/25V/X
BC105	0.1U/6/Y/25V
BC352	0.1U/6/Y/25V

COUPON2	COUPON1	1	2	COUPON	VCC3
COUPON1	COUPON2	1	2	COUPON	

GIGABYTE

Title

DDR SERIAL TERM.

Size	Document Number	Rev
B	**GA-8GEM800**	**1.0**

Date: 星期五, 八月 20, 2004 Sheet 10 of 32

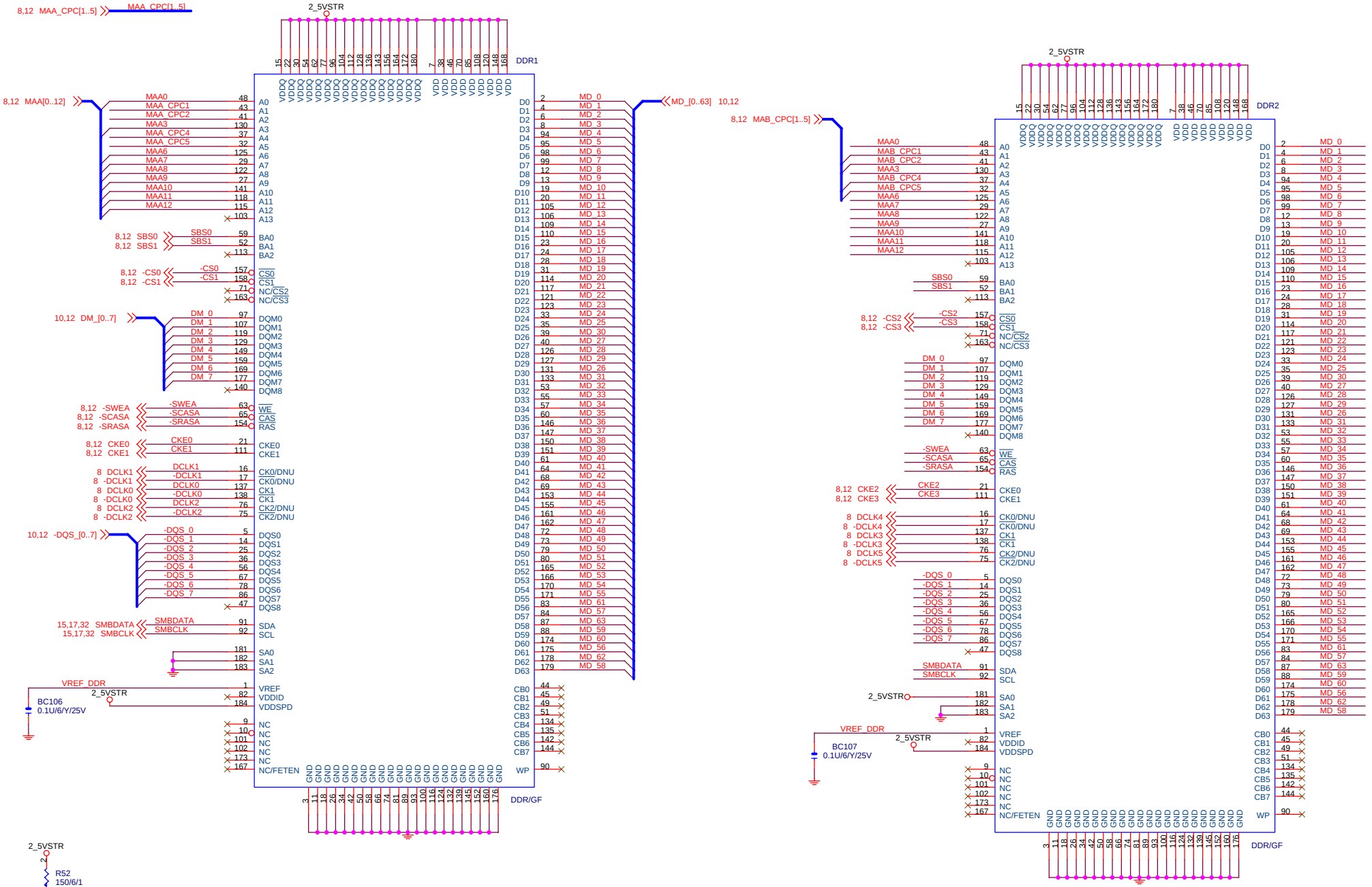

GIGABYTE

Title: DDR1,2

Size: B | Document Number: GA-8GEM800 | Rev: 1.0

Date: 星期五, 八月 20, 2004 | Sheet 11 of 32

GIGABYTE		
Title	DDR TERM.	
Size B	Document Number GA-8GEM800	Rev 1.0
Date: 星期五, 八月 20, 2004	Sheet 12 of 32	

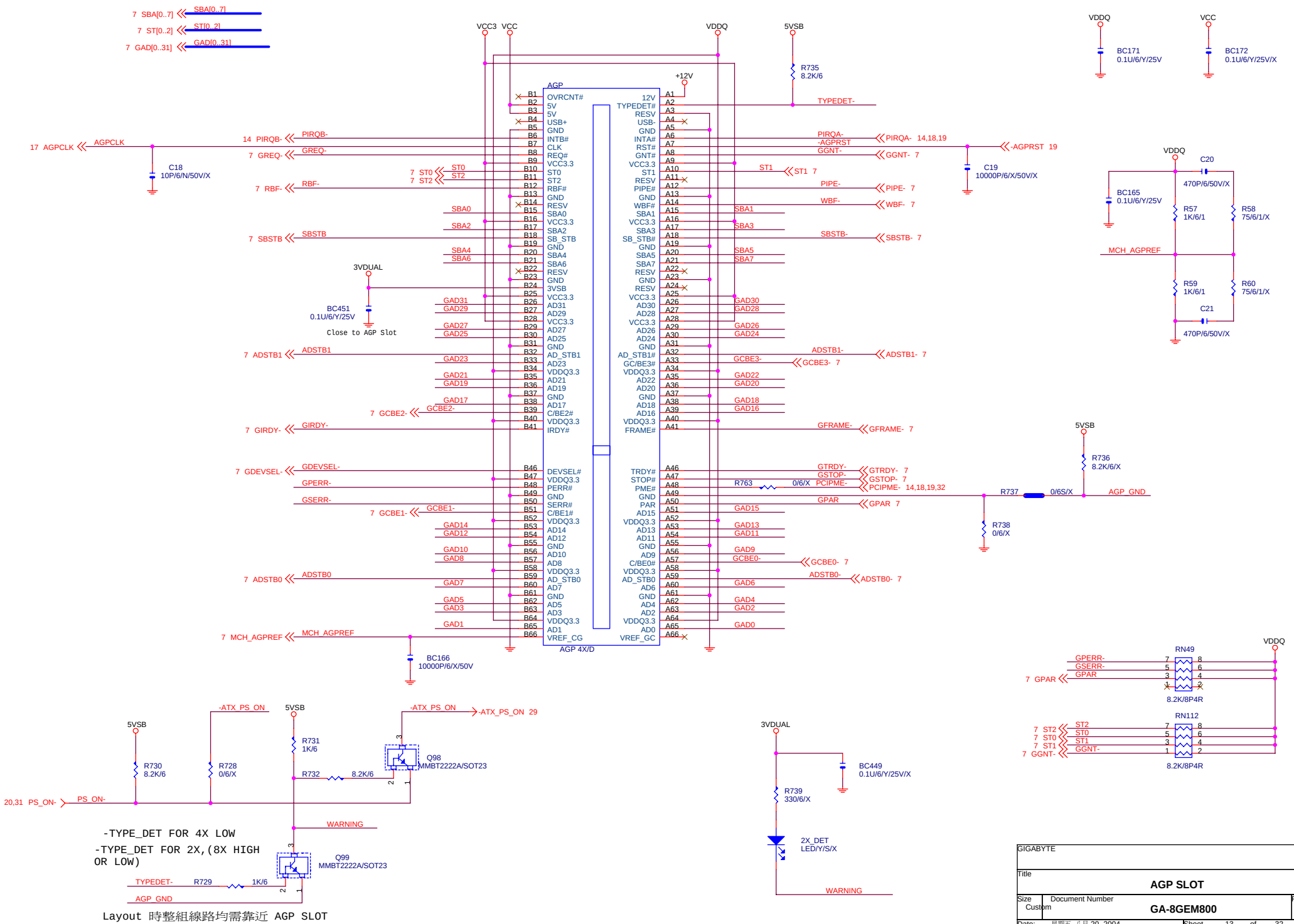
AGP
AGP 4X/D
VCC3 VCC
VDDQ
5VSB
+12V
3VDUAL
SBA[0..7]
ST[0..2]
GAD[0..31]
AGPCLK
PIRQB-
GREQ-
RBF-
SBSTB
ADSTB1
GIRDY-
GDEVSEL-
GPERR-
GSERR-
GCBE1-
ADSTB0
MCH_AGPREF
PIRQA-
-AGPRST
GGNT-
ST1
PIPE-
WBF-
SBA1
SBA3
SBSTB-
ADSTB1-
GCBE3-
GFRAME-
GTRDY-
GSTOP-
PCIPME-
GPAR
GCBE0-
ADSTB0-
TYPEDET-
-ATX_PS_ON
PS_ON-
WARNING
AGP_GND
Close to AGP Slot
-TYPE_DET FOR 4X LOW
-TYPE_DET FOR 2X,(8X HIGH OR LOW)
Layout 時整組線路均需靠近 AGP SLOT
GIGABYTE
Title
AGP SLOT
Size Custom
Document Number
GA-8GEM800
Rev 1.0
Date: 星期五, 八月 20, 2004
Sheet 13 of 32

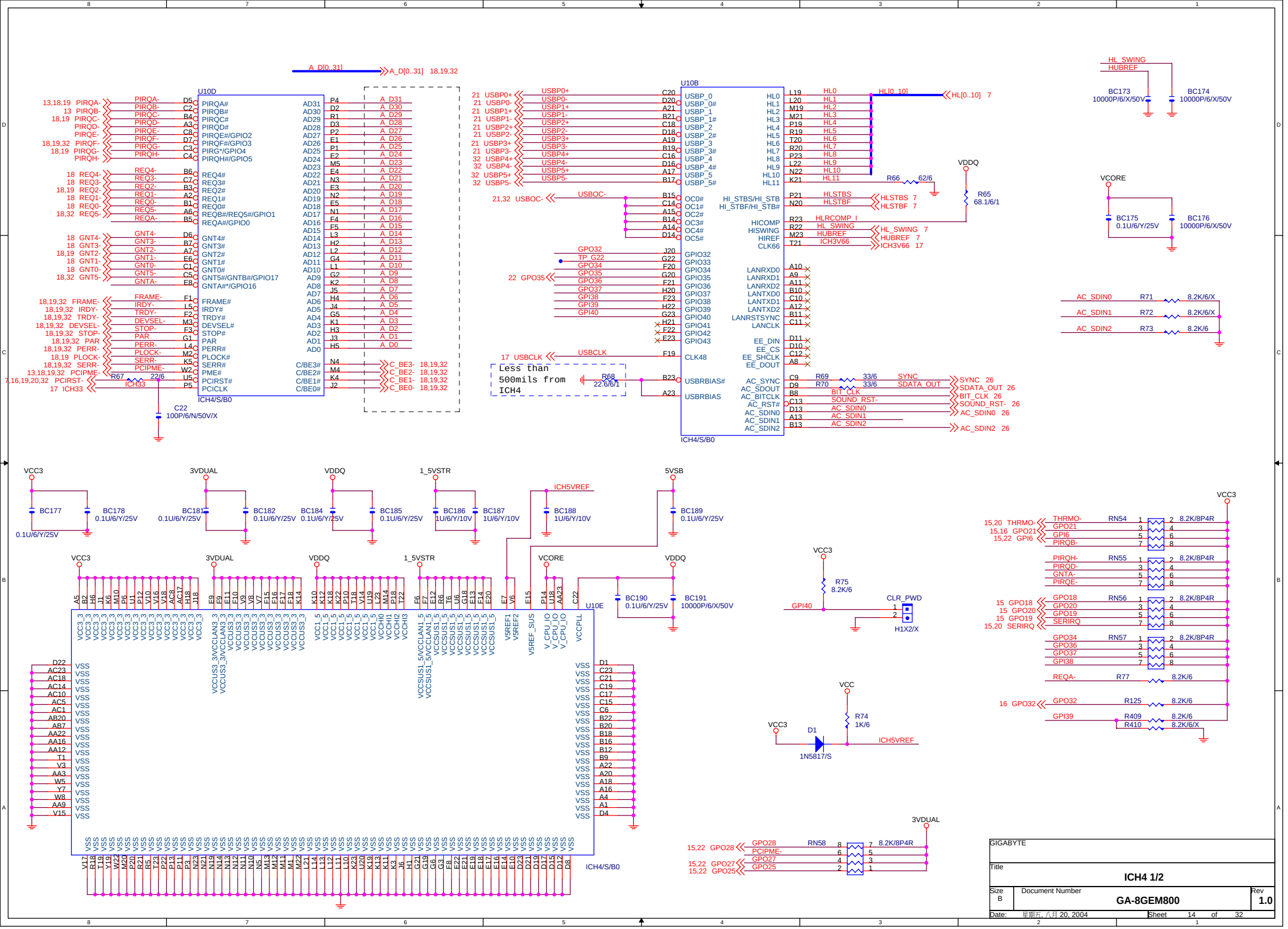
U10D
ICH4/S/B0
U10B
ICH4/S/B0
U10E
ICH4/S/B0
A_D[0..31]
HL[0..10]
HL_SWING
HUBREF
BC173 10000P/6/X/50V
BC174 10000P/6/X/50V
VDDQ
R66 62/6
R65 68.1/6/1
VCORE
BC175 0.1U/6/Y/25V
BC176 10000P/6/X/50V
AC_SDIN0 R71 8.2K/6/X
AC_SDIN1 R72 8.2K/6/X
AC_SDIN2 R73 8.2K/6
Less than 500mils from ICH4
R68 22.6/6/1
R67 22/6
C22 100P/6/N/50V/X
VCC3
3VDUAL
VDDQ
1_5VSTR
5VSB
ICH5VREF
VCORE
BC177 0.1U/6/Y/25V
BC178 0.1U/6/Y/25V
BC181 0.1U/6/Y/25V
BC182 0.1U/6/Y/25V
BC184 0.1U/6/Y/25V
BC185 0.1U/6/Y/25V
BC186 1U/6/Y/10V
BC187 1U/6/Y/10V
BC188 1U/6/Y/10V
BC189 0.1U/6/Y/25V
BC190 0.1U/6/Y/25V
BC191 10000P/6/X/50V
R75 8.2K/6
GPI40
CLR_PWD
H1X2/X
R74 1K/6
D1 1N5817/S
RN54 THRMO- GPO21 GPI6 PIRQB- 8.2K/8P4R
RN55 PIRQH- PIRQD- GNTA- PIRQE- 8.2K/8P4R
RN56 GPO18 GPO20 GPO19 SERIRQ 8.2K/8P4R
RN57 GPO34 GPO36 GPO37 GPI38 8.2K/8P4R
REQA- R77 8.2K/6
GPO32 R125 8.2K/6
GPI39 R409 8.2K/6 R410 8.2K/6/X
RN58 GPO28 PCIPME- GPO27 GPO25 8.2K/8P4R
GIGABYTE
Title
ICH4 1/2
Size B
Document Number
GA-8GEM800
Rev 1.0
Date: 星期五, 八月 20, 2004
Sheet 14 of 32

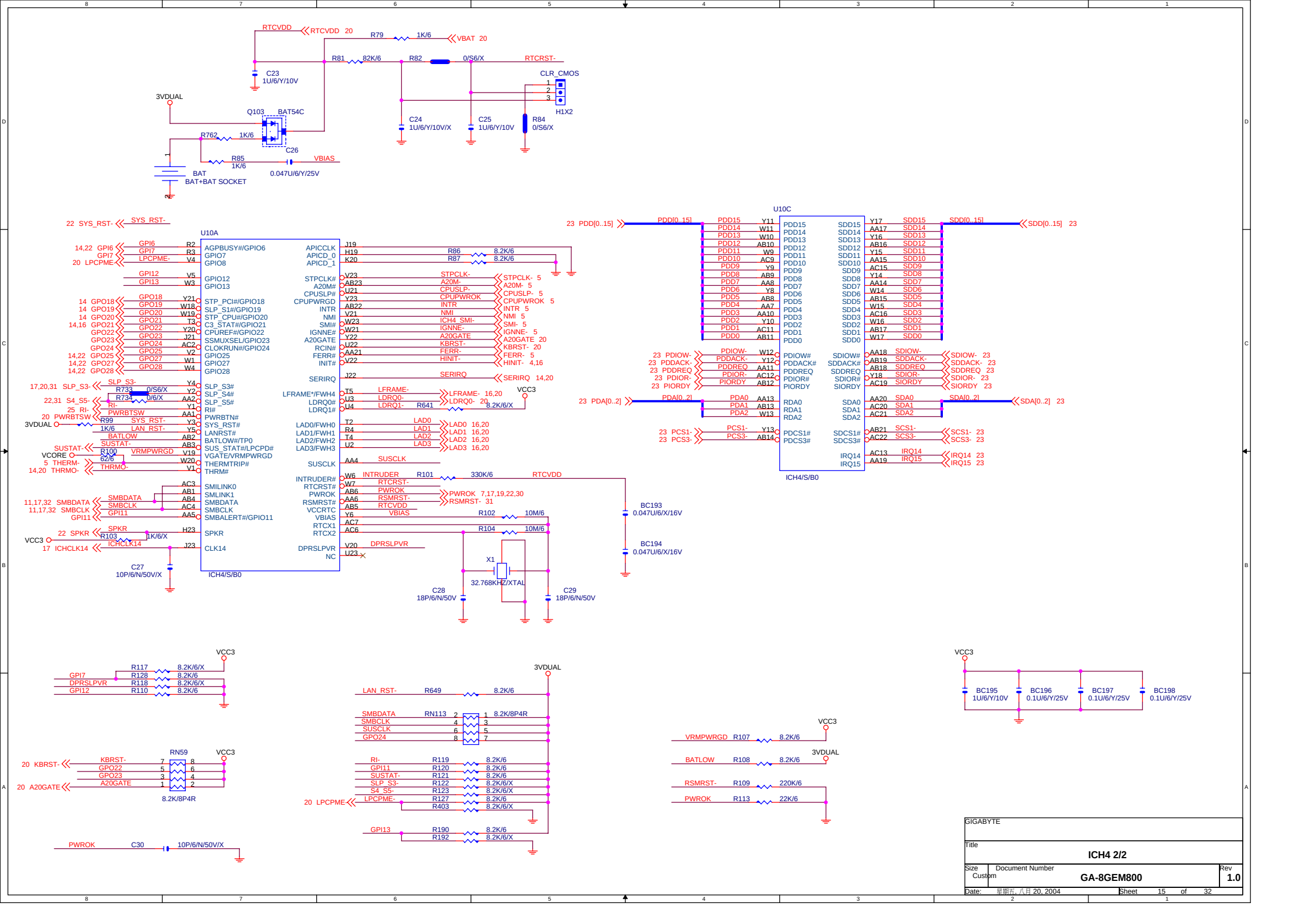
RTCVDD
RTCVDD 20
R79 1K/6
VBAT 20
R81 82K/6
R82 0/S6/X
RTCRST-
C23 1U/6/Y/10V
CLR_CMOS
H1X2
3VDUAL
Q103 BAT54C
R762 1K/6
C24 1U/6/Y/10V/X
C25 1U/6/Y/10V
R84 0/S6/X
C26
R85 1K/6
VBIAS
0.047U/6/Y/25V
BAT
BAT+BAT SOCKET
U10A
ICH4/S/B0
U10C
ICH4/S/B0
BC193 0.047U/6/X/16V
BC194 0.047U/6/X/16V
X1
32.768KHZ/XTAL
C28 18P/6/N/50V
C29 18P/6/N/50V
C27 10P/6/N/50V/X
VCC3
RN59
8.2K/8P4R
RN113 8.2K/8P4R
BC195 1U/6/Y/10V
BC196 0.1U/6/Y/25V
BC197 0.1U/6/Y/25V
BC198 0.1U/6/Y/25V
PWROK C30 10P/6/N/50V/X
GIGABYTE
Title
ICH4 2/2
Size Custom
Document Number
GA-8GEM800
Rev 1.0
Date: 星期五, 八月 20, 2004
Sheet 15 of 32

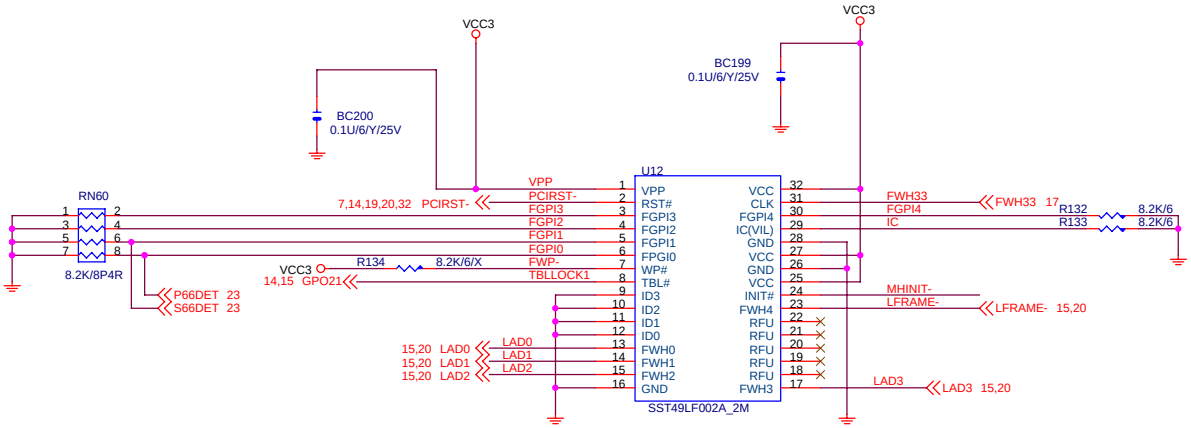

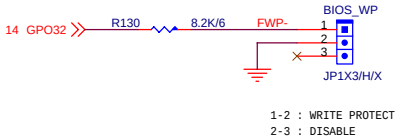

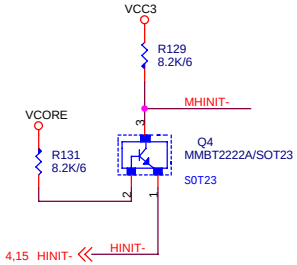

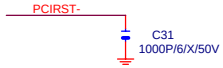

GIGABYTE		
Title	FWH(DUAL BIOS)	
Size B	Document Number GA-8GEM800	Rev 1.0
Date: 星期五, 八月 20, 2004	Sheet 16 of 32	

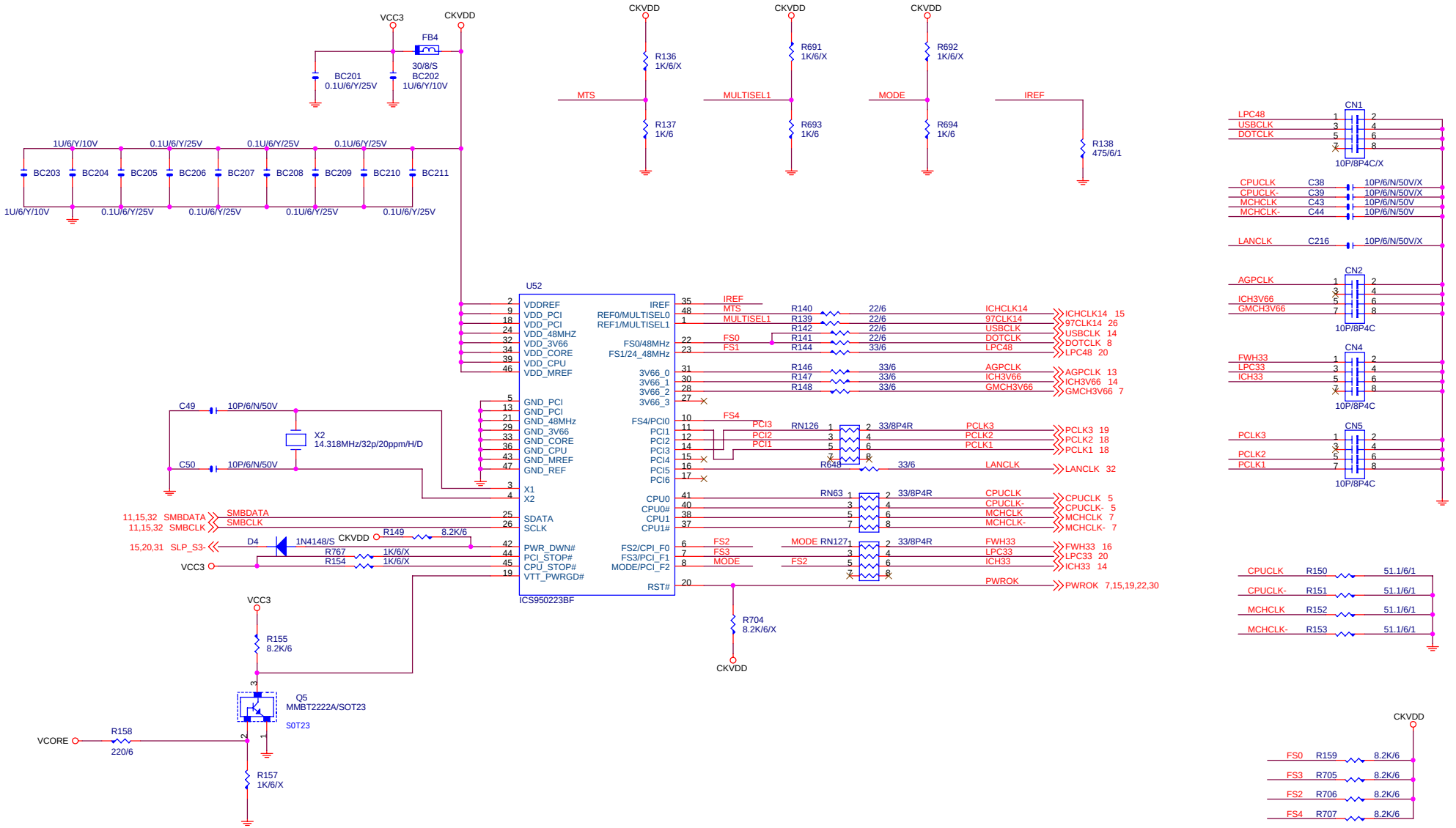

GIGABYTE			
Title	CLOCK GENERATOR		
Size Custom	Document Number GA-8GEM800		Rev 1.0
Date: 星期五, 八月 20, 2004	Sheet 17 of 32		

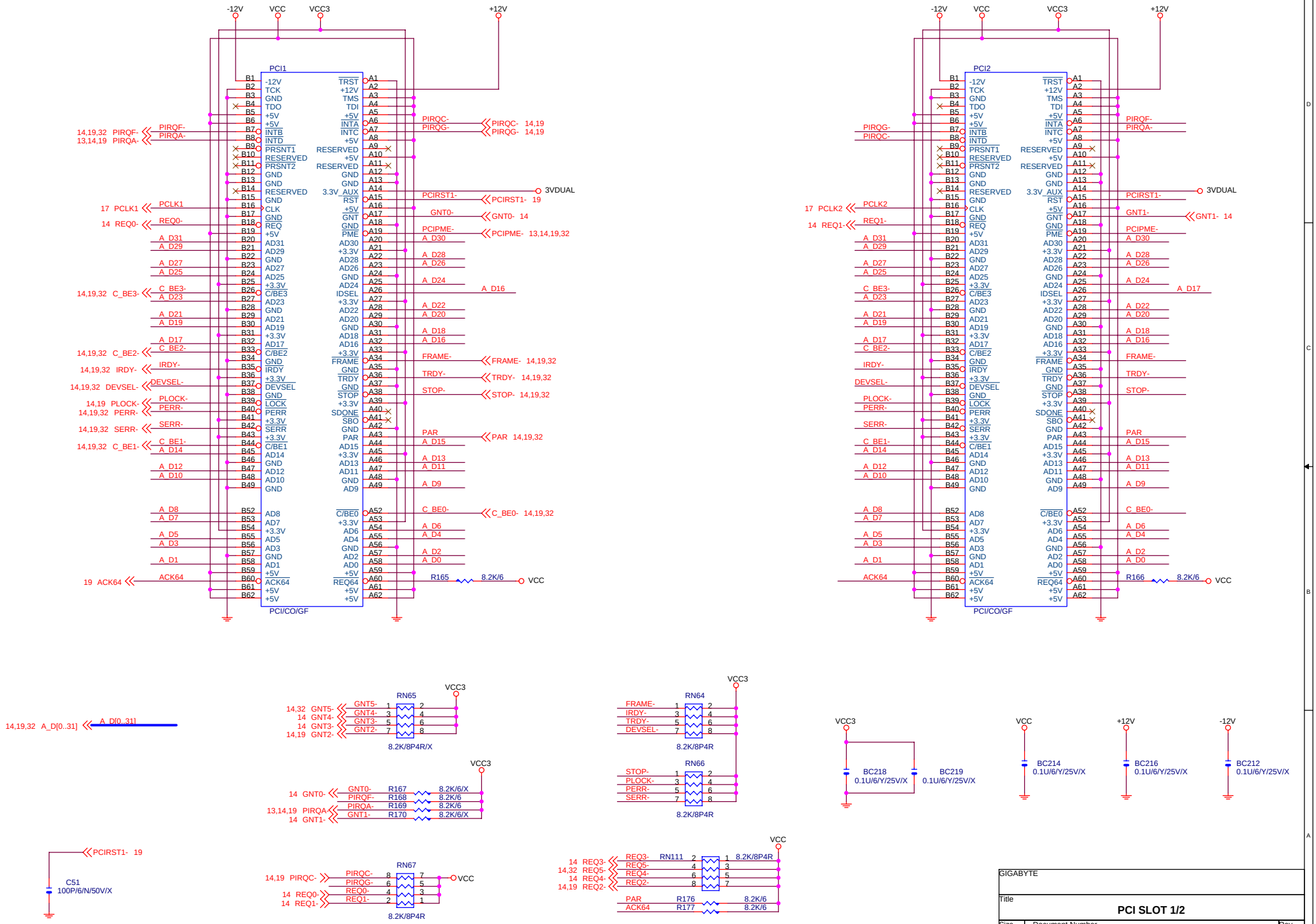
PCI1
PCI2
PCI/CO/GF
-12V
VCC
VCC3
+12V
3VDUAL
PIRQF-
PIRQA-
PIRQC-
PIRQG-
PCLK1
PCLK2
REQ0-
REQ1-
C_BE3-
C_BE2-
IRDY-
DEVSEL-
PLOCK-
PERR-
SERR-
C_BE1-
ACK64
PCIRST1-
GNT0-
GNT1-
PCIPME-
A_D30
A_D28
A_D26
A_D24
A_D22
A_D20
A_D18
A_D16
A_D17
FRAME-
TRDY-
STOP-
PAR
A_D15
A_D13
A_D11
A_D9
C_BE0-
A_D6
A_D4
A_D2
A_D0
R165
R166
8.2K/6
A_D[0..31]
RN65
RN64
RN66
RN67
RN111
8.2K/8P4R/X
8.2K/8P4R
GNT5-
GNT4-
GNT3-
GNT2-
R167
R168
R169
R170
8.2K/6/X
8.2K/6
BC218
BC219
BC214
BC216
BC212
0.1U/6/Y/25V/X
C51
100P/6/N/50V/X
REQ3-
REQ5-
REQ4-
REQ2-
R176
R177
GIGABYTE
Title
PCI SLOT 1/2
Size
B
Document Number
GA-8GEM800
Rev
1.0
Date:
星期五, 八月 20, 2004
Sheet
18
of
32

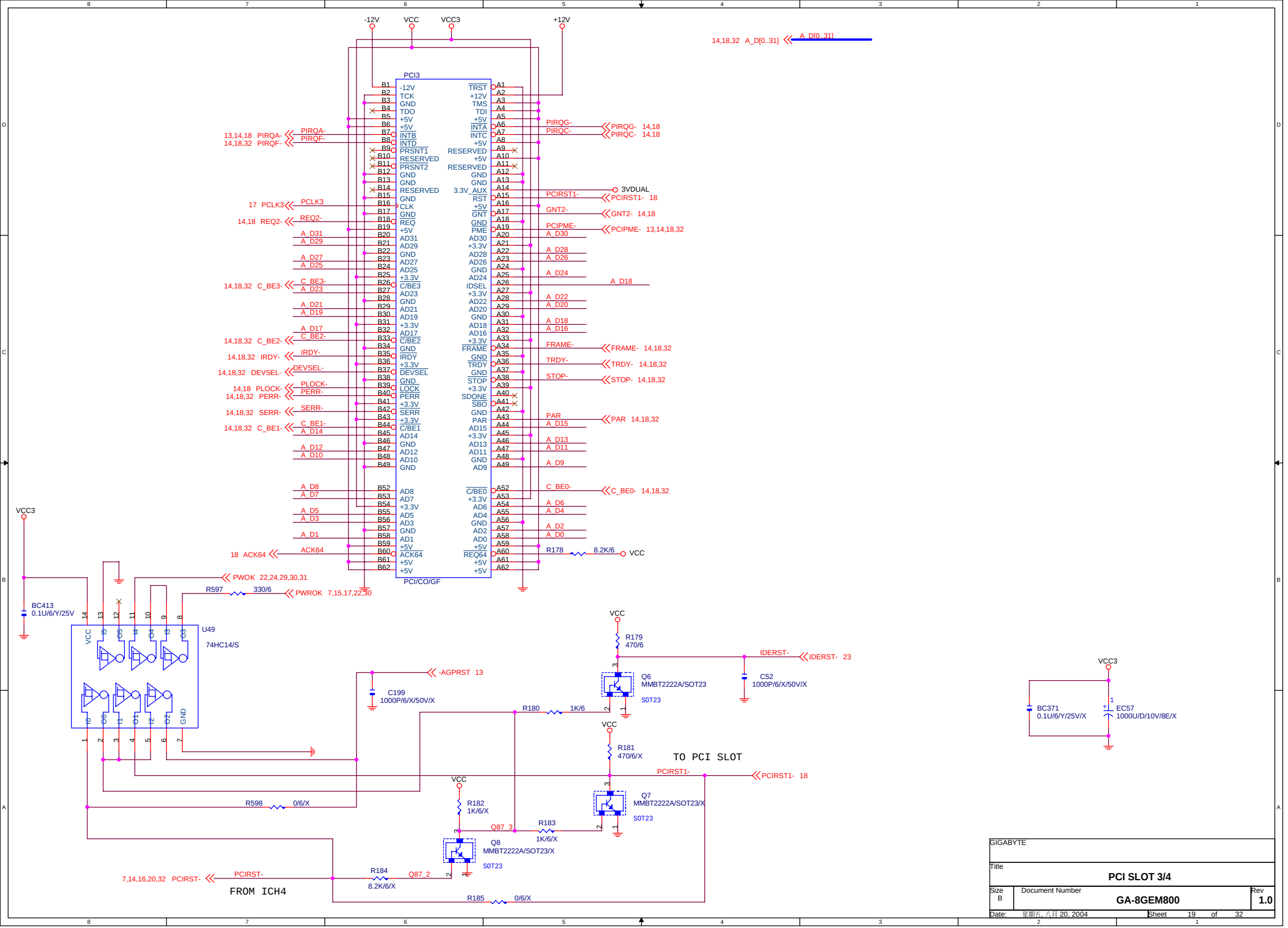

GIGABYTE		
Title	PCI SLOT 3/4	
Size B	Document Number GA-8GEM800	Rev 1.0
Date: 星期五, 八月 20, 2004	Sheet 19 of 32	

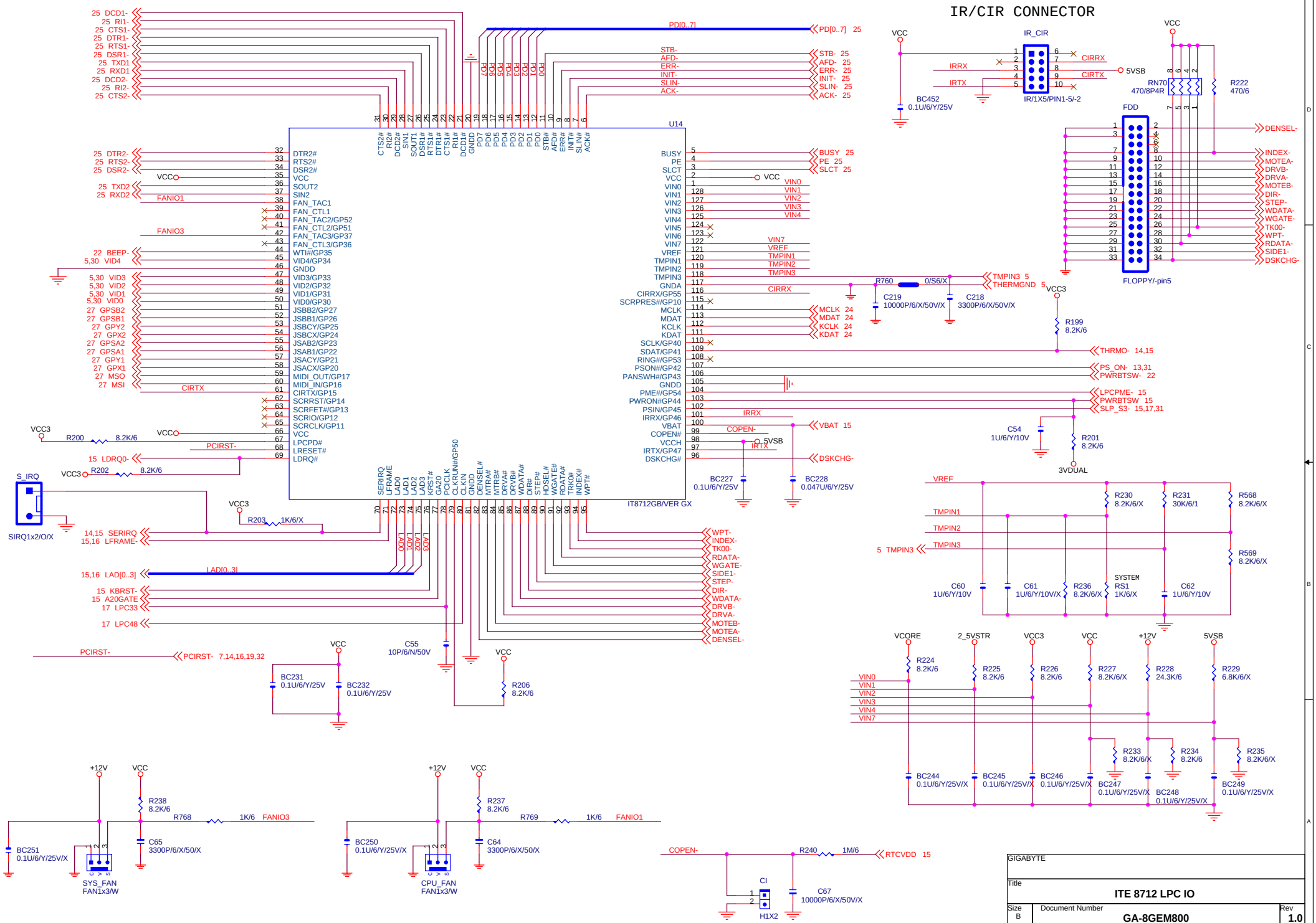

GIGABYTE	
Title	ITE 8712 LPC IO
Size B	Document Number GA-8GEM800
Rev	1.0
Date: 星期五, 八月 20, 2004	Sheet 20 of 32

ICH4 USB2.0

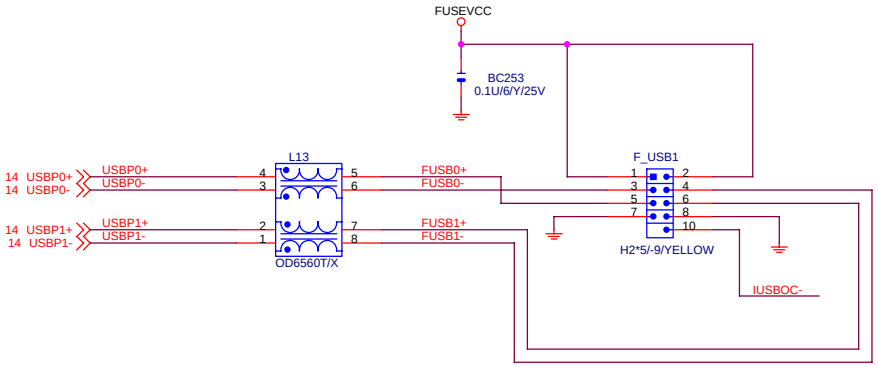

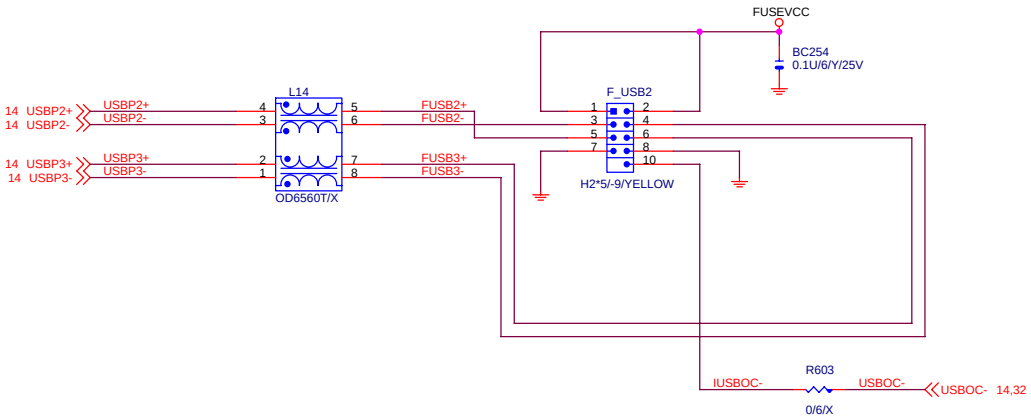

GIGABYTE		
Title	ICH USB+LAN PORT	
Size B	Document Number GA-8GEM800	Rev 1.0
Date: 星期五, 八月 20, 2004	Sheet 21 of 32	

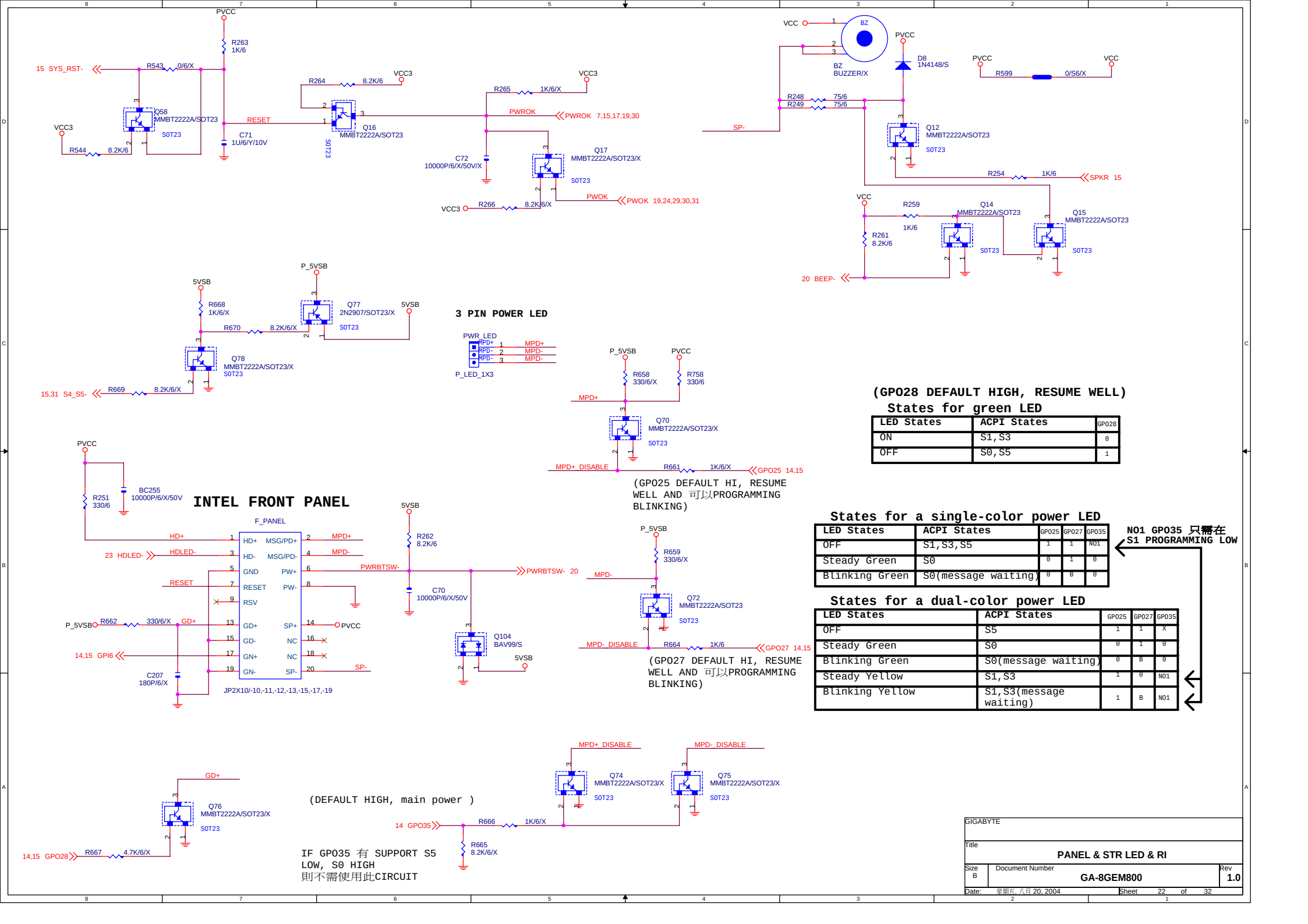

(GPO28 DEFAULT HIGH, RESUME WELL)

States for green LED

LED States	ACPI States	GPO28
ON	S1,S3	0
OFF	S0,S5	1

States for a single-color power LED

LED States	ACPI States	GPO25	GPO27	GPO35
OFF	S1,S3,S5	1	1	NO1
Steady Green	S0	0	1	0
Blinking Green	S0(message waiting)	0	B	0

NO1 GPO35 只需在 S1 PROGRAMMING LOW

States for a dual-color power LED

LED States	ACPI States	GPO25	GPO27	GPO35
OFF	S5	1	1	X
Steady Green	S0	0	1	0
Blinking Green	S0(message waiting)	0	B	0
Steady Yellow	S1,S3	1	0	NO1
Blinking Yellow	S1,S3(message waiting)	1	B	NO1

GIGABYTE

Title: PANEL & STR LED & RI

Size: B | Document Number: GA-8GEM800 | Rev: 1.0

Date: 星期五, 八月 20, 2004 | Sheet 22 of 32

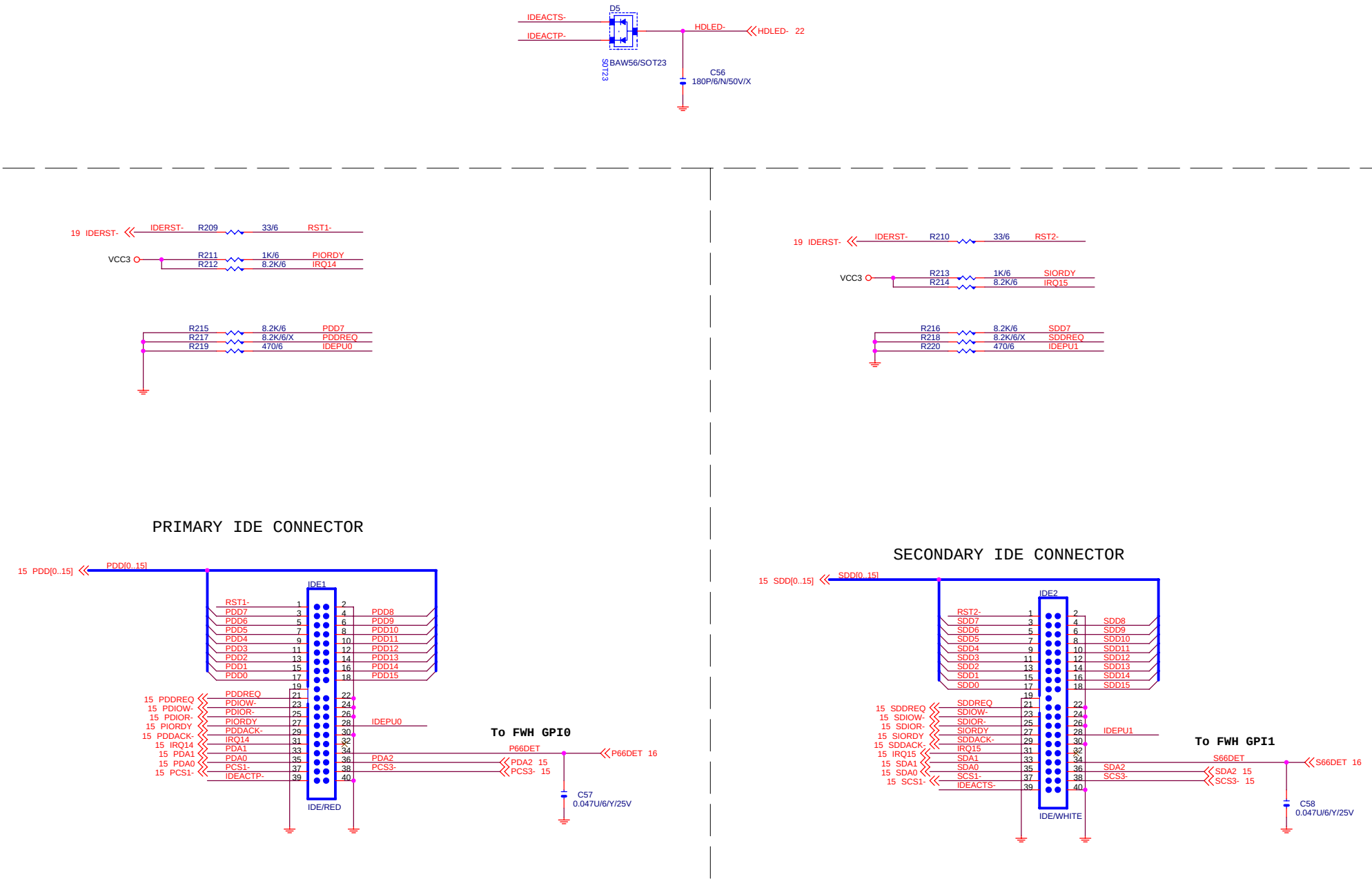

GIGABYTE			
Title	IDE CONNECTOR		
Size B	Document Number GA-8GEM800		Rev 1.0
Date: 星期五, 八月 20, 2004	Sheet 23 of 32		

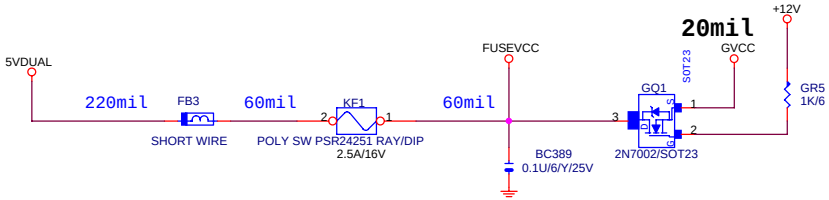

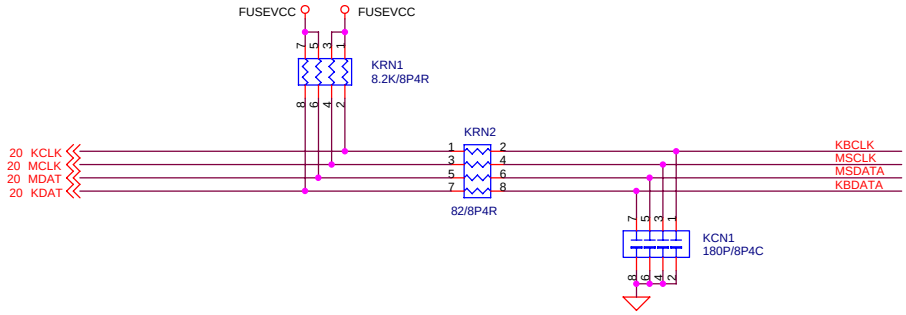

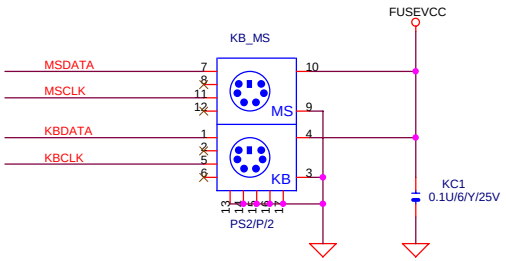

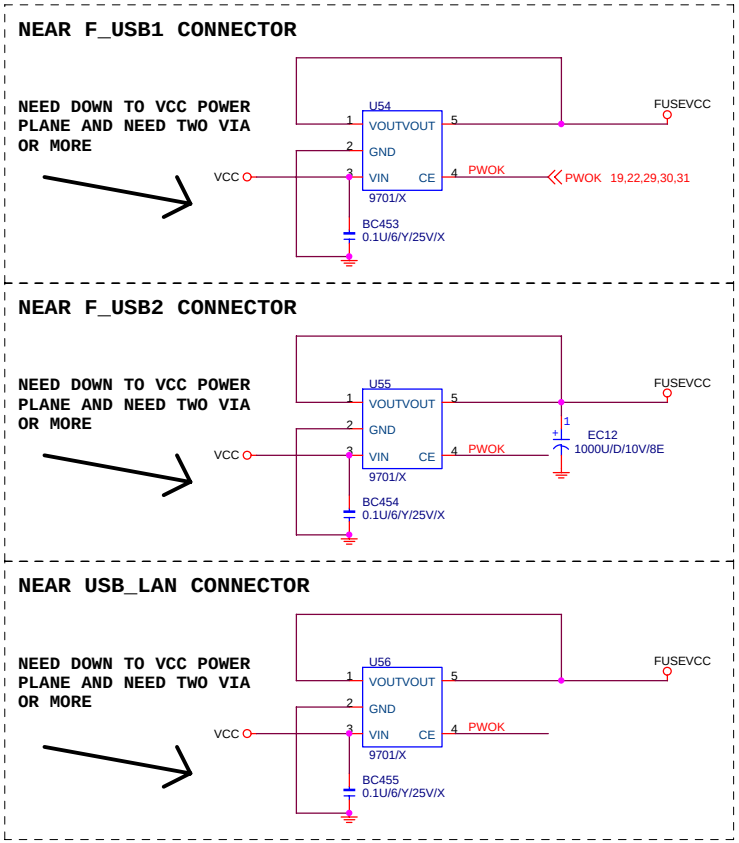

GIGABYTE CORP.		
Title	KB & PS2 MOUSE & IR	
Size B	Document Number GA-8GEM800	Rev 1.0
Date: 星期五, 八月 20, 2004	Sheet 24 of 32	

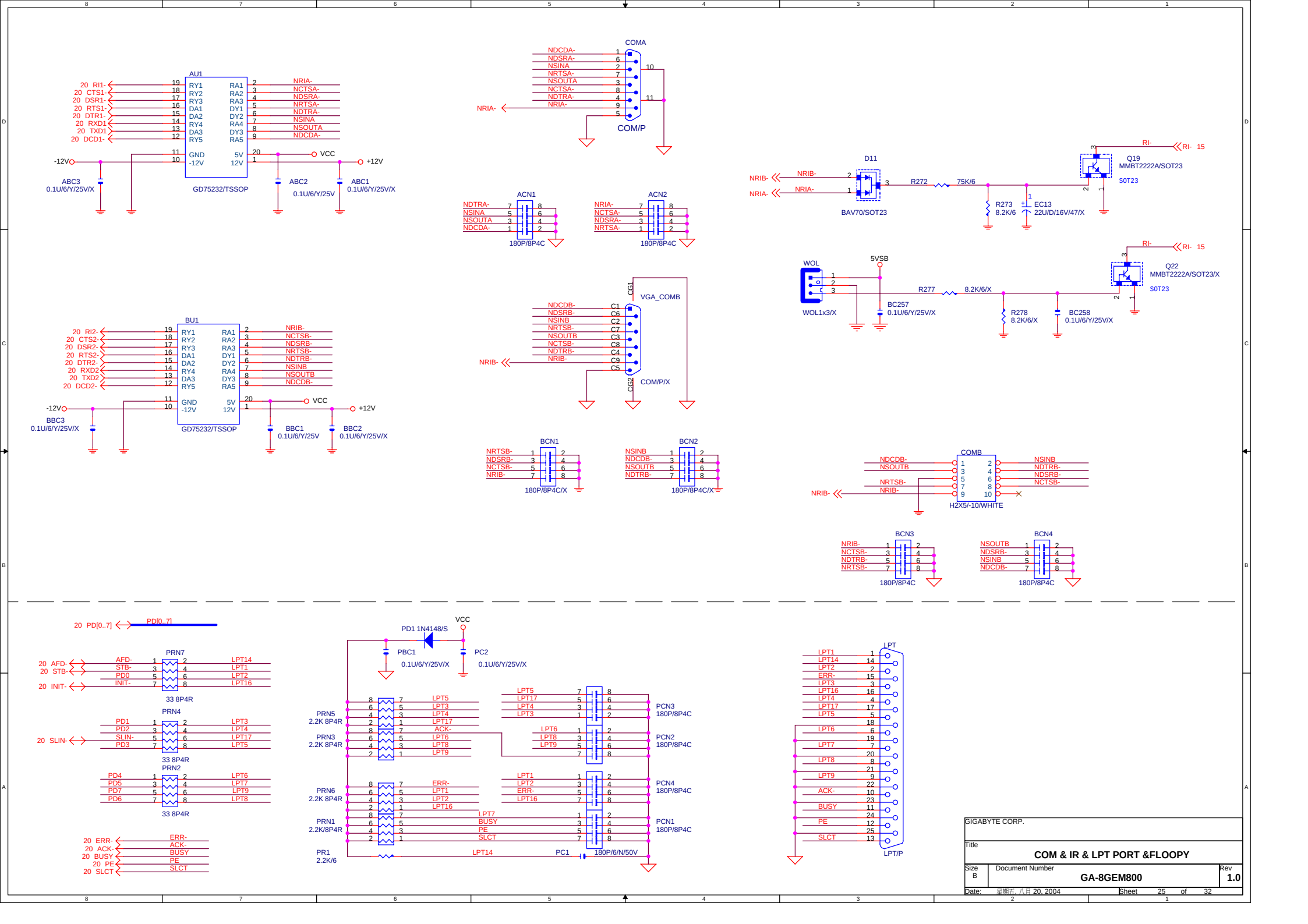

GIGABYTE CORP.	
Title	COM & IR & LPT PORT &FLOOPY
Size B	Document Number GA-8GEM800
Rev	1.0
Date: 星期五, 八月 20, 2004	Sheet 25 of 32

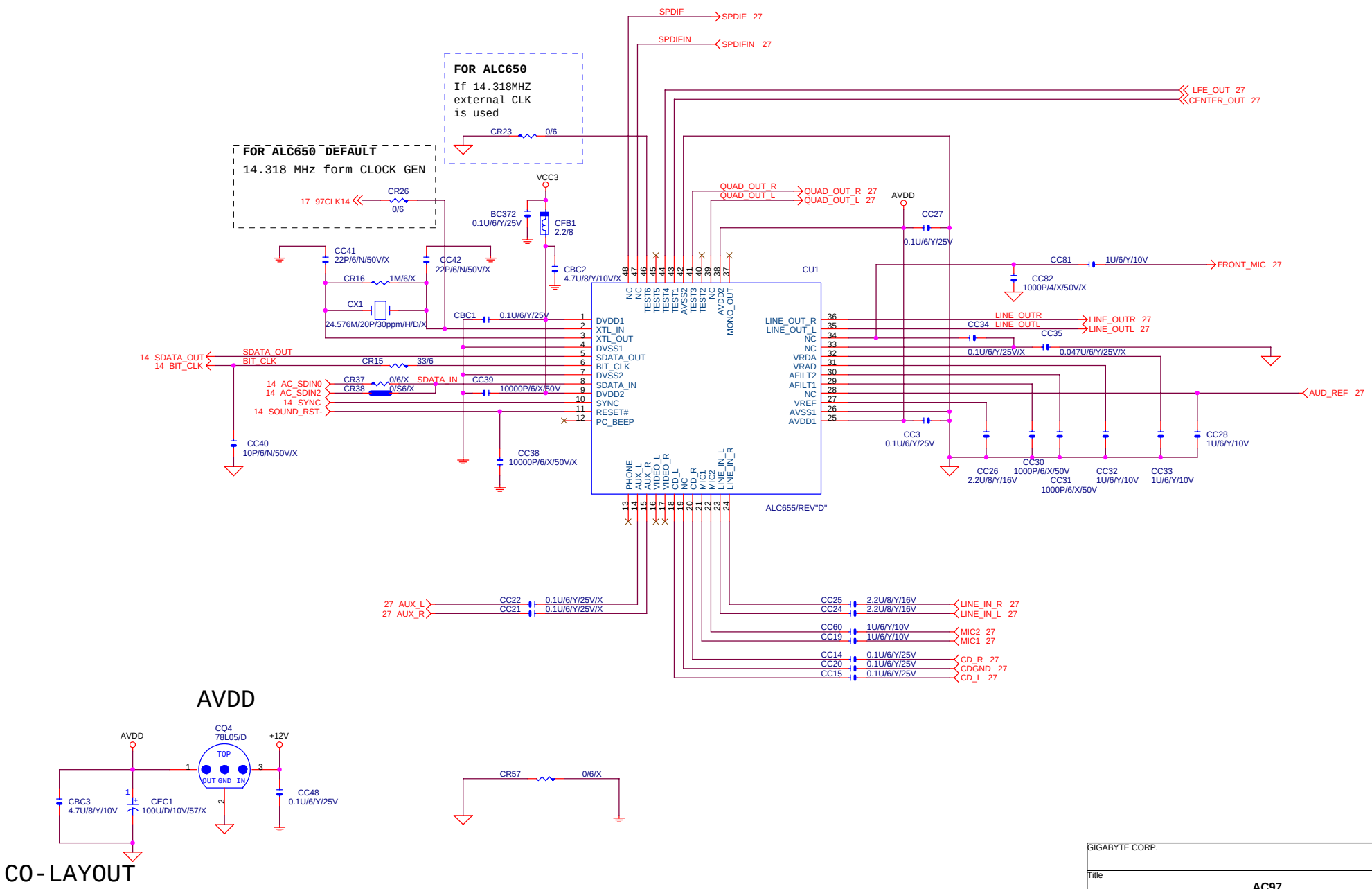
FOR ALC650
If 14.318MHZ
external CLK
is used
FOR ALC650 DEFAULT
14.318 MHz form CLOCK GEN
CU1
ALC655/REV"D"
AVDD
CO-LAYOUT
GIGABYTE CORP.
Title
AC97
Size
B
Document Number
GA-8GEM800
Rev
1.0
Date:
星期五, 八月 20, 2004
Sheet
26
of
32

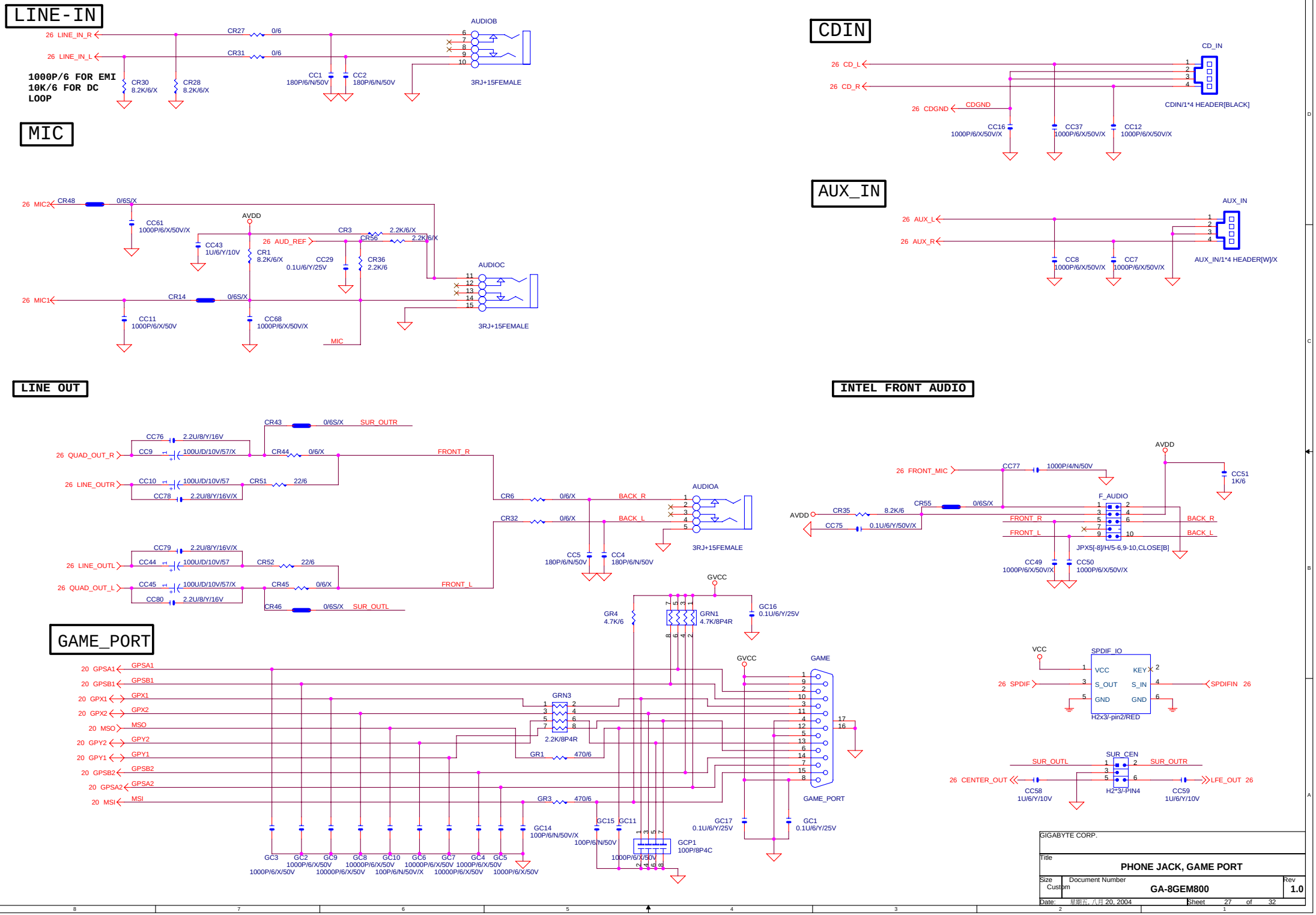
LINE-IN
26 LINE_IN_R
26 LINE_IN_L
CR27 0/6
CR31 0/6
AUDIOB
1000P/6 FOR EMI
10K/6 FOR DC
LOOP
CR30 8.2K/6/X
CR28 8.2K/6/X
CC1 180P/6/N/50V
CC2 180P/6/N/50V
3RJ+15FEMALE
CDIN
CD_IN
26 CD_L
26 CD_R
26 CDGND
CDGND
CDIN/1*4 HEADER[BLACK]
CC16 1000P/6/X/50V/X
CC37 1000P/6/X/50V/X
CC12 1000P/6/X/50V/X
MIC
26 MIC2
CR48 0/6S/X
CC61 1000P/6/X/50V/X
AVDD
CC43 1U/6/Y/10V
CR1 8.2K/6/X
26 AUD_REF
CR3 2.2K/6/X
CR56 2.2K/6/X
CC29 0.1U/6/Y/25V
CR36 2.2K/6
AUDIOC
26 MIC1
CR14 0/6S/X
CC11 1000P/6/X/50V
CC68 1000P/6/X/50V/X
MIC
3RJ+15FEMALE
AUX_IN
26 AUX_L
26 AUX_R
AUX_IN
CC8 1000P/6/X/50V/X
CC7 1000P/6/X/50V/X
AUX_IN/1*4 HEADER[W]/X
LINE OUT
CR43 0/6S/X SUR_OUTR
CC76 2.2U/8/Y/16V
26 QUAD_OUT_R
CC9 100U/D/10V/57/X
CR44 0/6/X
FRONT_R
26 LINE_OUTR
CC10 100U/D/10V/57
CR51 22/6
CC78 2.2U/8/Y/16V/X
CR6 0/6/X
BACK_R
AUDIOA
CR32 0/6/X
BACK_L
CC5 180P/6/N/50V
CC4 180P/6/N/50V
3RJ+15FEMALE
CC79 2.2U/8/Y/16V/X
26 LINE_OUTL
CC44 100U/D/10V/57
CR52 22/6
26 QUAD_OUT_L
CC45 100U/D/10V/57/X
CR45 0/6/X
FRONT_L
CC80 2.2U/8/Y/16V
CR46 0/6S/X SUR_OUTL
INTEL FRONT AUDIO
AVDD
26 FRONT_MIC
CC77 1000P/4/N/50V
CC51 1K/6
CR55 0/6S/X
F_AUDIO
AVDD
CR35 8.2K/6
CC75 0.1U/6/Y/50V/X
FRONT_R
FRONT_L
BACK_R
BACK_L
JPX5[-8]/H/5-6,9-10,CLOSE[B]
CC49 1000P/6/X/50V/X
CC50 1000P/6/X/50V/X
GAME_PORT
GVCC
GR4 4.7K/6
GRN1 4.7K/8P4R
GC16 0.1U/6/Y/25V
20 GPSA1
20 GPSB1
20 GPX1
20 GPX2
20 MSO
20 GPY2
20 GPY1
20 GPSB2
20 GPSA2
20 MSI
GPSA1
GPSB1
GPX1
GPX2
MSO
GPY2
GPY1
GPSB2
GPSA2
MSI
GRN3
2.2K/8P4R
GR1 470/6
GR3 470/6
GAME
GAME_PORT
GC14 100P/6/N/50V/X
GC15 100P/6/N/50V
GC11
GCP1 100P/8P4C
GC17 0.1U/6/Y/25V
GC1 0.1U/6/Y/25V
GC3 1000P/6/X/50V
GC2 1000P/6/X/50V
GC9 10000P/6/X/50V
GC8 10000P/6/X/50V
GC10 100P/6/N/50V/X
GC6 10000P/6/X/50V
GC7 10000P/6/X/50V
GC4 1000P/6/X/50V
GC5 1000P/6/X/50V
VCC
SPDIF_IO
26 SPDIF
VCC
S_OUT
GND
KEY
S_IN
GND
SPDIFIN 26
H2x3/-pin2/RED
SUR_CEN
SUR_OUTL
SUR_OUTR
26 CENTER_OUT
CC58 1U/6/Y/10V
H2*3/-PIN4
CC59 1U/6/Y/10V
LFE_OUT 26
GIGABYTE CORP.
Title
PHONE JACK, GAME PORT
Size Custom
Document Number
GA-8GEM800
Rev 1.0
Date: 星期五, 八月 20, 2004
Sheet 27 of 32

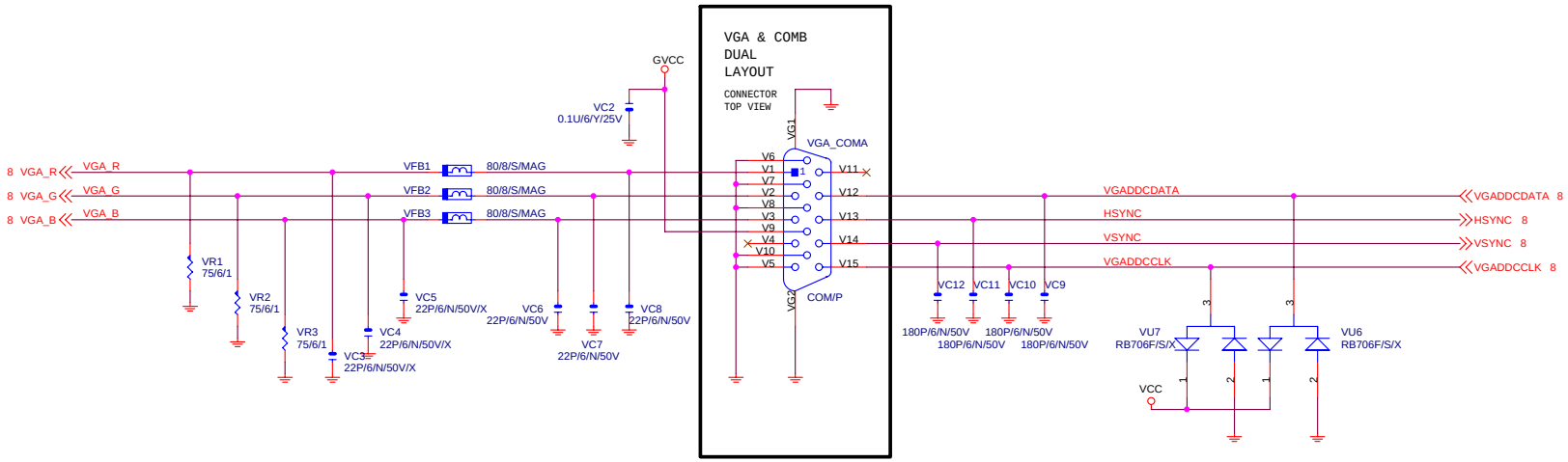

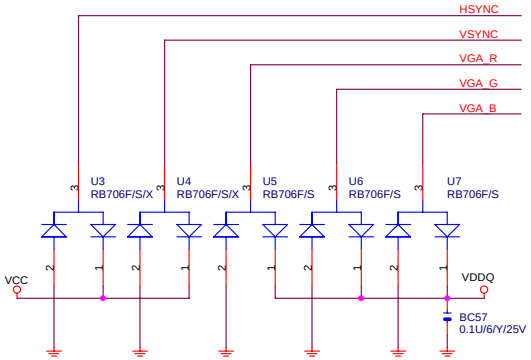

Title	VGA CONNECTOR	
Size: Custom	Document Number: GA-8GEM800	Rev: 1.0
Date: 星期五, 八月 20, 2004	Sheet 28 of 32	

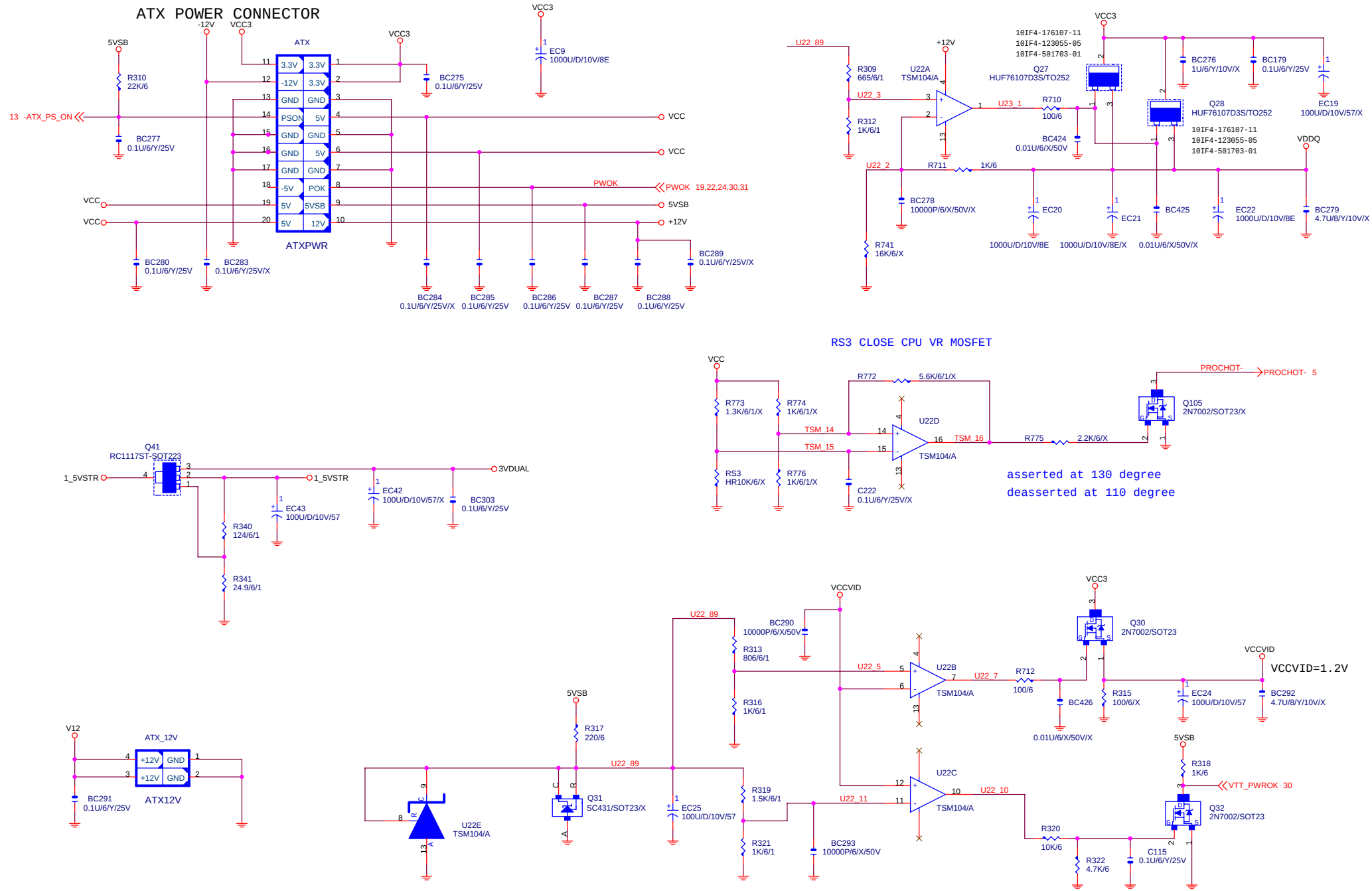

GIGABYTE		
Title	Misc. PWR & ATX CONN.	
Size B	Document Number GA-8GEM800	Rev 1.0
Date: 星期五, 八月 20, 2004	Sheet 29 of 32	

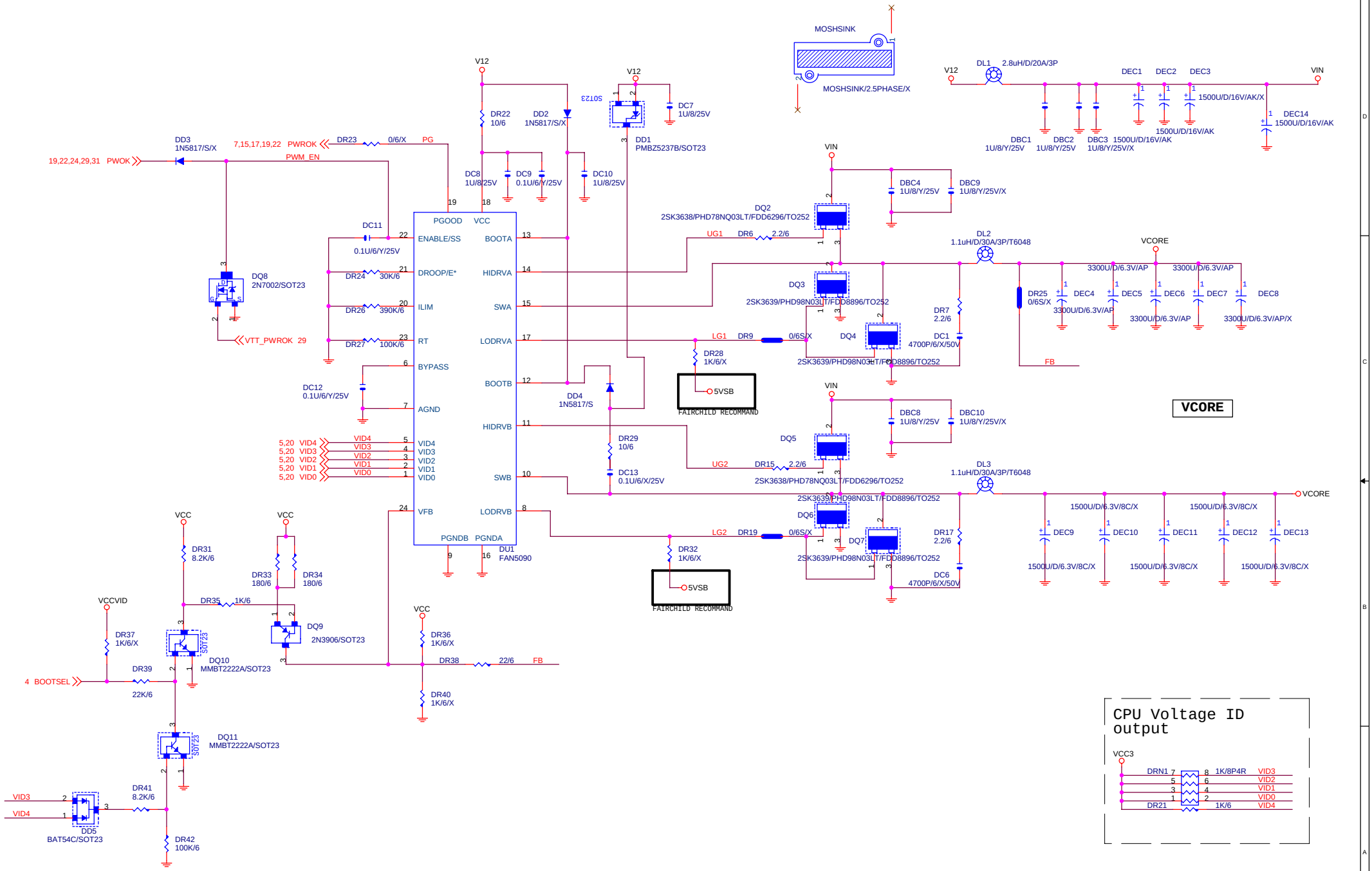

GIGABYTE		
Title	Vcore PWM HIP6301/6302CB	
Size Custom	Document Number GA-8GEM800	Rev 1.0
Date: 星期五, 八月 20, 2004	Sheet 30 of 32	

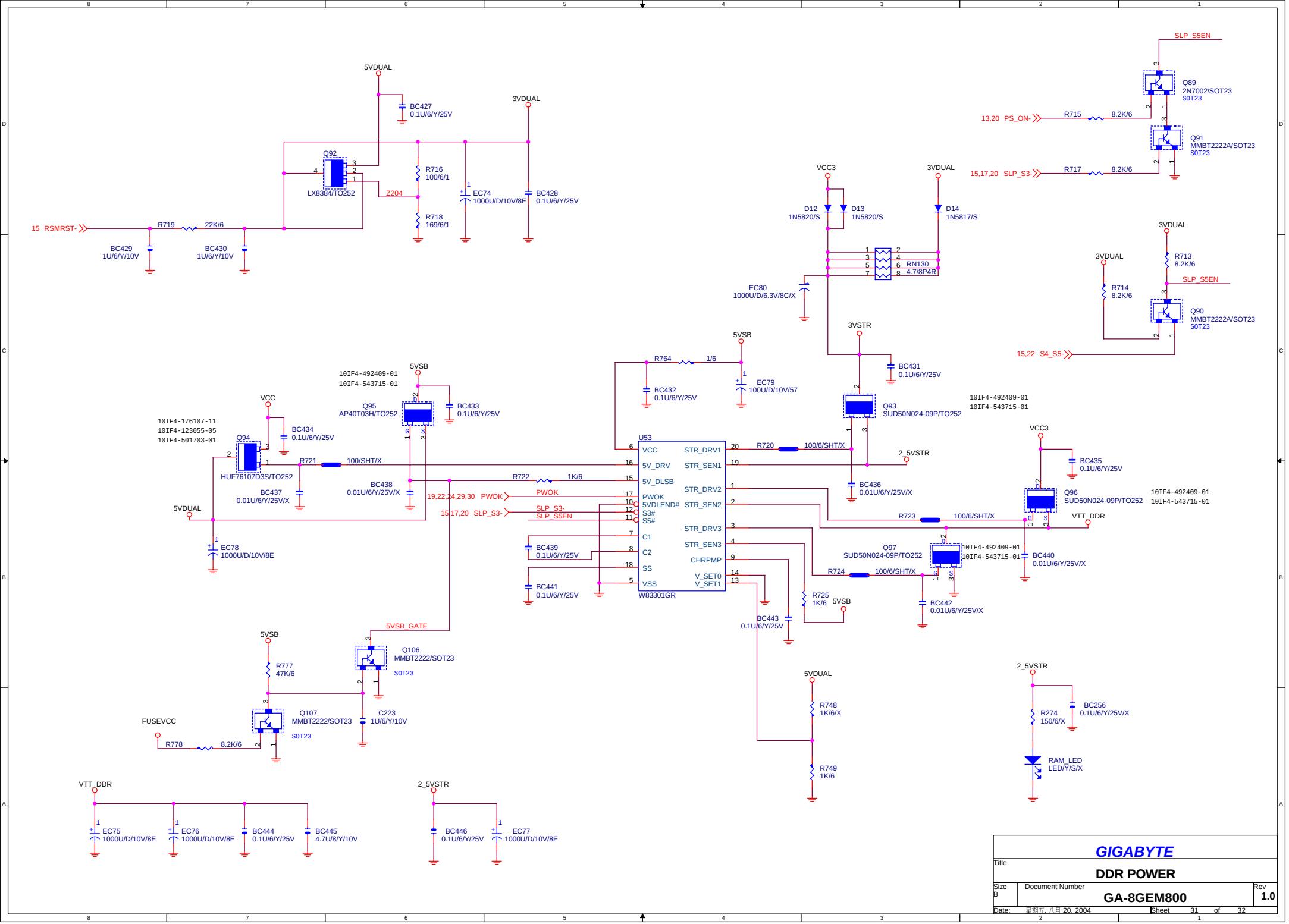

GIGABYTE		
Title	DDR POWER	
Size B	Document Number GA-8GEM800	Rev 1.0
Date: 星期五, 八月 20, 2004	Sheet 31 of 32	

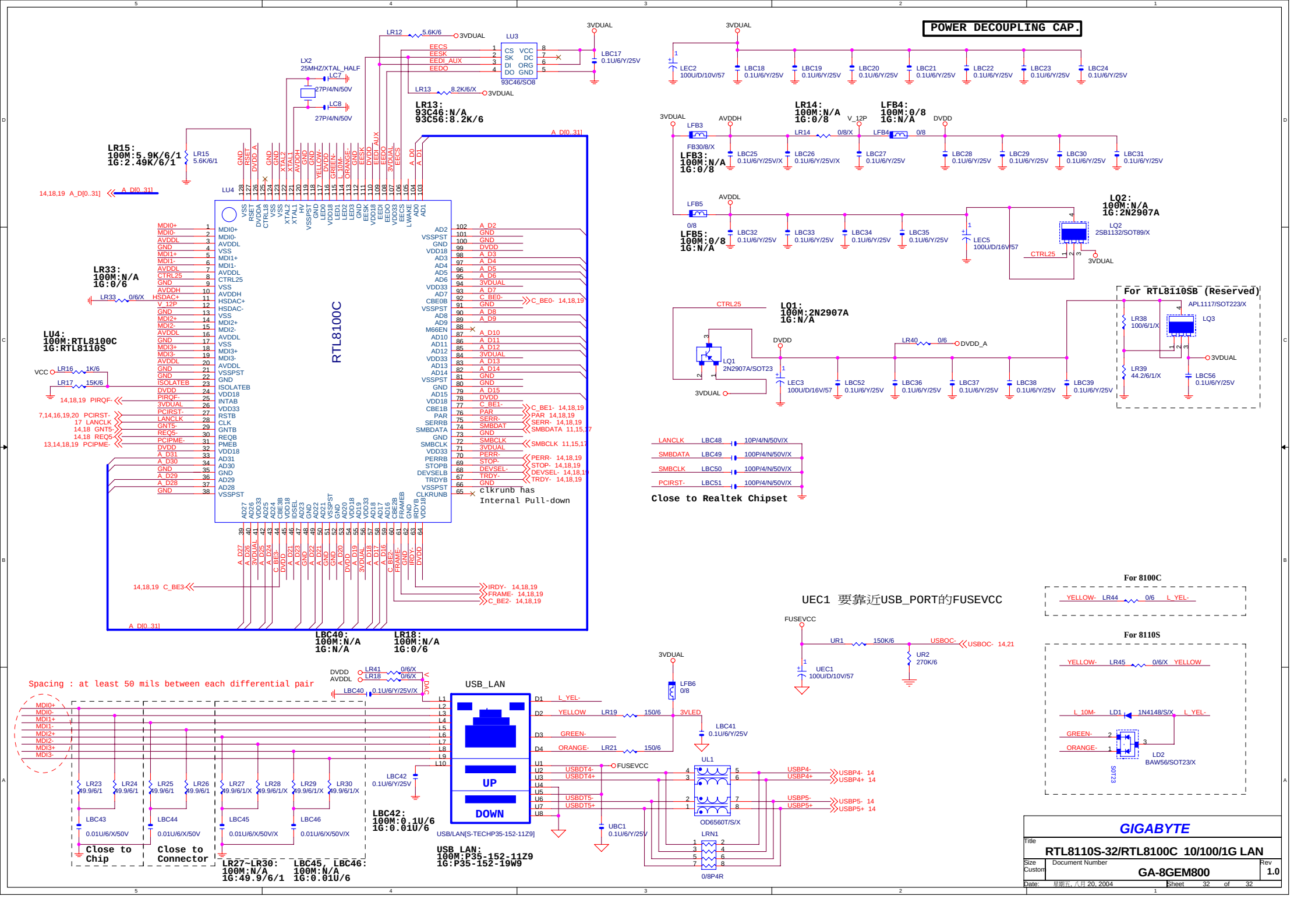
POWER DECOUPLING CAP.
LU3
93C46/SO8
LX2
25MHZ/XTAL_HALF
LR13:
93C46:N/A
93C56:8.2K/6
LR15:
100M:5.9K/6/1
1G:2.49K/6/1
LU4
RTL8100C
LR33:
100M:N/A
1G:0/6
LU4:
100M:RTL8100C
1G:RTL8110S
clkrunb has
Internal Pull-down
LBC40:
100M:N/A
1G:N/A
LR18:
100M:N/A
1G:0/6
LR14:
100M:N/A
1G:0/8
LFB4:
100M:0/8
1G:N/A
LFB3:
100M:N/A
1G:0/8
LFB5:
100M:0/8
1G:N/A
LQ2:
100M:N/A
1G:2N2907A
LQ1:
100M:2N2907A
1G:N/A
For RTL8110SB (Reserved)
Close to Realtek Chipset
UEC1 要靠近USB_PORT的FUSEVCC
For 8100C
For 8110S
Spacing : at least 50 mils between each differential pair
USB_LAN
UP
DOWN
USB/LAN[S-TECHP35-152-11Z9]
LBC42:
100M:0.1U/6
1G:0.01U/6
USB_LAN:
100M:P35-152-11Z9
1G:P35-152-19W9
Close to Chip
Close to Connector
LR27~LR30:
100M:N/A
1G:49.9/6/1
LBC45, LBC46:
100M:N/A
1G:0.01U/6
GIGABYTE
RTL8110S-32/RTL8100C 10/100/1G LAN
GA-8GEM800
1.0
Date: 星期五, 八月 20, 2004
Sheet 32 of 32