Model Name: 8I915ME-GL

Revision 1.02

DATE:05/02-1

SHEET	TITLE
01	COVER SHEET
02	BLOCK DIAGRAM
03	BOM & PCB MODIFY HISTORY
04	P4_LGA775_A
05	P4_LGA775_B
06	P4_LGA775_C
07	P4_LGA775_D
08	VCORE POWER
09	GMCH-GRANTSDALE_HOST
10	GMCH-GARNTSDALE_DDR
11	GMCH-GRANTSDALE_PCI E, DMI
12	GMCH-GRANTSDALE_INT VGA
13	GMCH-GRANTSDALE_GND
14	GMCH-GRANTSDALE_PWR
15	DDR CHANNEL A
16	DDR CHANNEL B
17	DDR TERMINATION
18	FAN & WOL
19	ICH6 PCI, USB, DMI, LAN
20	ICH6 IDE, GPIO, SATA, CTRL
21	ICH6 VCC, GND
22	CLK GEN

SHEET	TITLE
23	PCI SLOT 1,2
24	PCI SLOT 3
25	ITE8712HX
26	HWMO/FAN/FWH BIOS
27	KB_MS
28	COM/LPT/FDD
29	(FRONT+REAR)USB/RING/IDE
30	AC97 CODEC ALC655
31	AUDIO JACK
32	LAN RTL8110S/8100C
33	ATX POWER CONN.
34	ALL POWER
35	FRONT PANEL/BZ

COMPONENT SIDE
(1 oz. Copper)
VCC SIDE
(1 oz. Copper)
GND SIDE
(1 oz. Copper)
SOLDER SIDE
(1 oz. Copper)

GIGABYTE

Title	Cover Sheet	
Size Custom	Document Number GA-8I915ME-GL	Rev 1.02
Date: Monday, May 02, 2005	Sheet 1 of 36	

BLOCK DIAGRAM

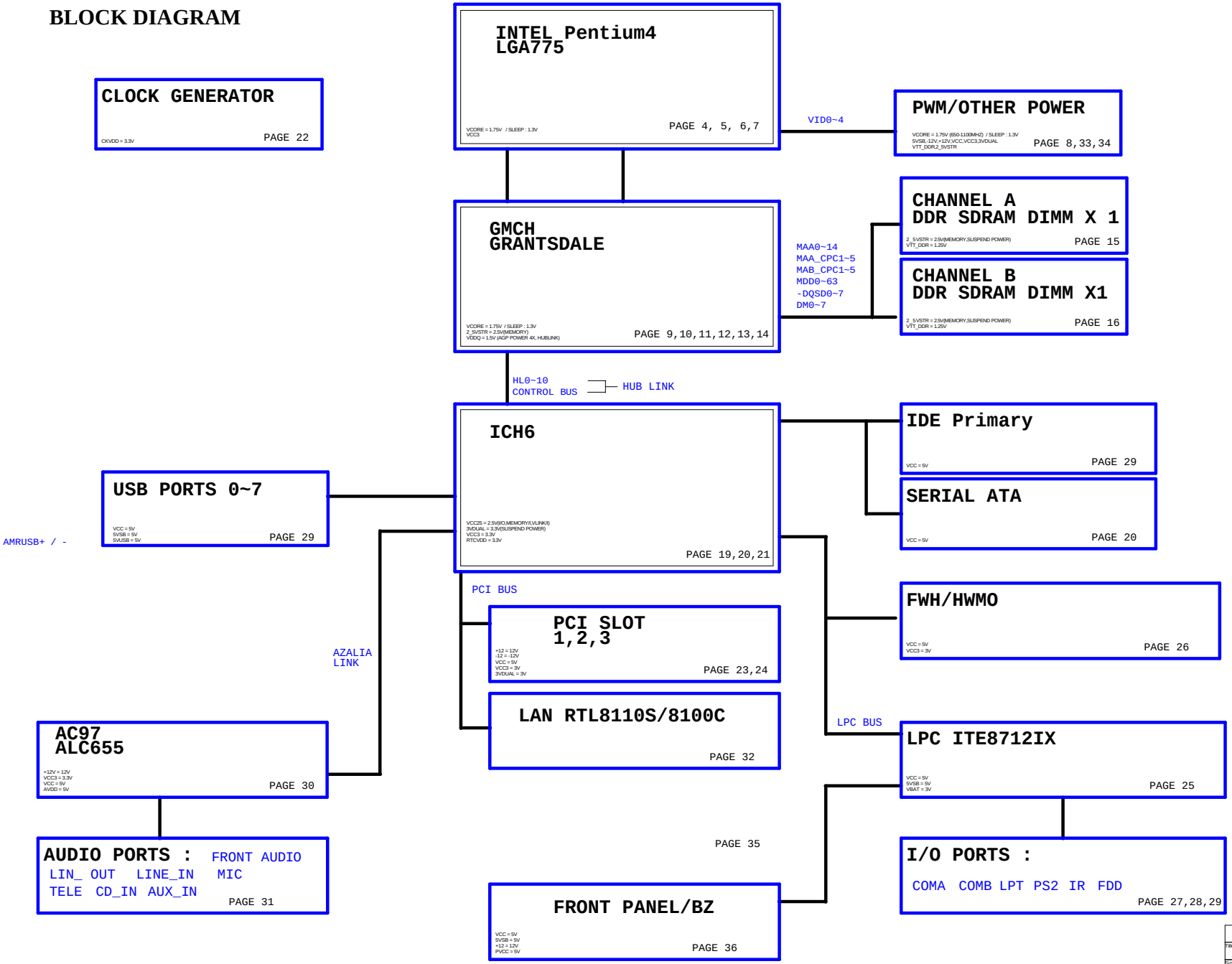

GIGABYTE			
Title	BOM & PCB MODIFY HISTORY		
Size Custom	Document Number	GA-8I915ME-GL	Rev 1.02
Date: Monday, May 02, 2005	Sheet 2 of 36		

Model Name: 8I915ME-GL

Version: 1.02

Component value change history

2005/01/10

Data	Change Item	Reason
02/15	FROM 8IGV775-CH1 cost down rev:1.0	
03/25	rev:1.02 for EMI & noise &F10 power issue	
04/18	FROM 8I915ME-CH1 FOR DIST GL	
05/02 BOM:102B	FOR PVT	

Circuit or PCB layout change for next version

PAGE	Change Item	Reason

GIGABYTE

Title	BOM & PCB MODIFY HISTORY	
Size Custom	Document Number GA-8I915ME-GL	Rev 1.02
Date: Monday, May 02, 2005	Sheet 3 of 36	

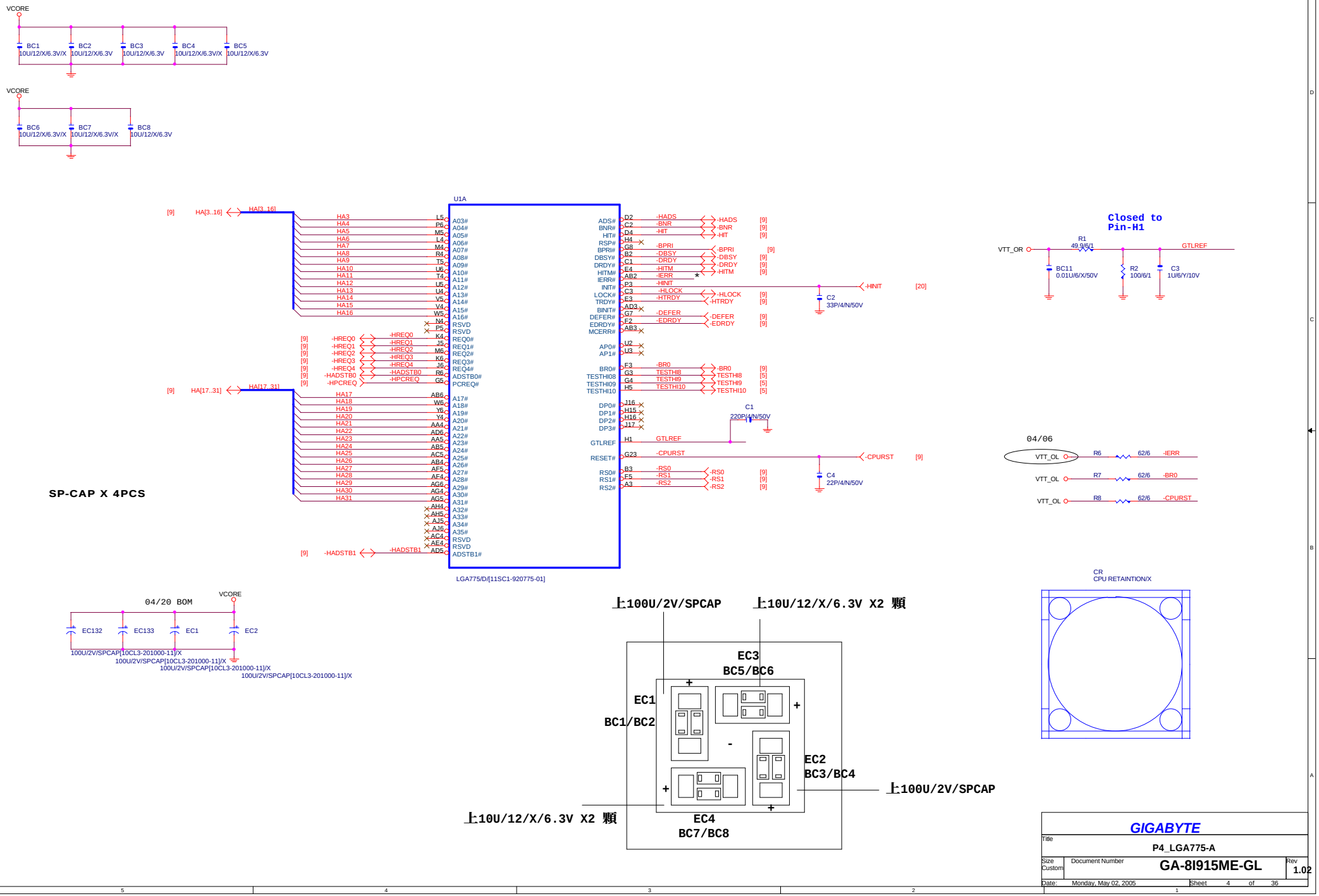

GIGABYTE			
Title	P4_LGA775-A		
Size Custom	Document Number	GA-8I915ME-GL	Rev 1.02
Date: Monday, May 02, 2005	Sheet 4 of 36		

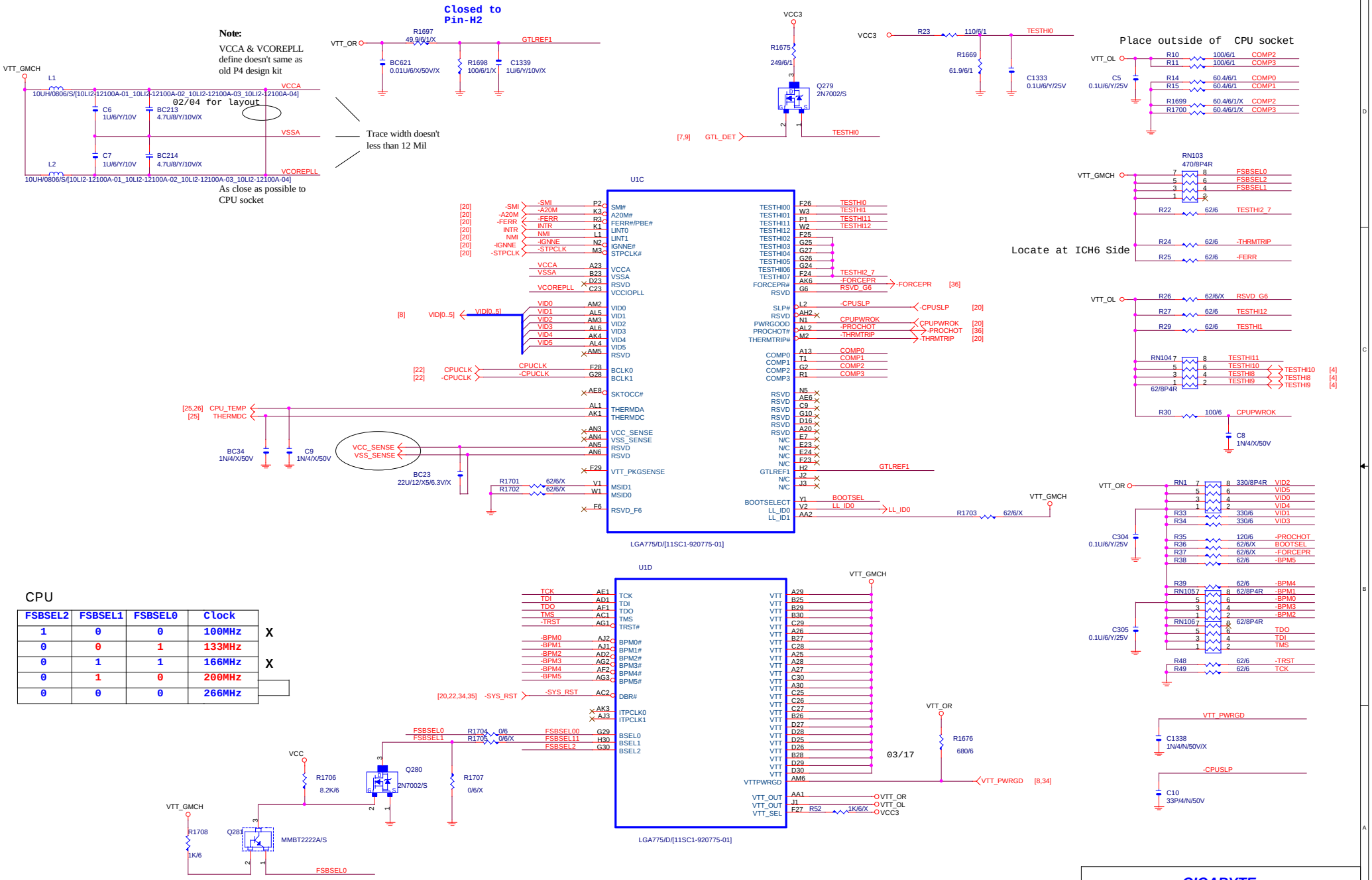
Note:
VCCA & VCOREPLL define doesn't same as old P4 design kit
Closed to Pin-H2
VTT_GMCH
L1
10UH/0806/S/[10LI2-12100A-01_10LI2-12100A-02_10LI2-12100A-03_10LI2-12100A-04]
02/04 for layout
C6 1U/6/Y/10V
BC213 4.7U/8/Y/10V/X
C7 1U/6/Y/10V
BC214 4.7U/8/Y/10V/X
L2
10UH/0806/S/[10LI2-12100A-01_10LI2-12100A-02_10LI2-12100A-03_10LI2-12100A-04]
VCCA
VSSA
VCOREPLL
As close as possible to CPU socket
Trace width doesn't less than 12 Mil
VTT_OR
R1697 49.9/6/1/X
BC621 0.01U/6/X/50V/X
R1698 100/6/1/X
C1339 1U/6/Y/10V/X
GTLREF1
VCC3
R1675 249/6/1
Q279 2N7002/S
[7,9] GTL_DET
TESTHI0
R23 110/6/1
R1669 61.9/6/1
C1333 0.1U/6/Y/25V
Place outside of CPU socket
VTT_OL
C5 0.1U/6/Y/25V
R10 100/6/1 COMP2
R11 100/6/1 COMP3
R14 60.4/6/1 COMP0
R15 60.4/6/1 COMP1
R1699 60.4/6/1/X COMP2
R1700 60.4/6/1/X COMP3
RN103 470/8P4R
FSBSEL0
FSBSEL2
FSBSEL1
R22 62/6 TESTHI2_7
Locate at ICH6 Side
R24 62/6 -THRMTRIP
R25 62/6 -FERR
U1C
LGA775/D/[11SC1-920775-01]
[20] -SMI
[20] -A20M
[20] -FERR
[20] INTR
[20] NMI
[20] -IGNNE
[20] -STPCLK
VCCA
VSSA
VCOREPLL
[8] VID[0..5]
[22] CPUCLK
[22] -CPUCLK
[25,26] CPU_TEMP
[25] THERMDC
BC34 1N/4/X/50V
C9 1N/4/X/50V
VCC_SENSE
VSS_SENSE
BC23 22U/12/X5/6.3V/X
R1701 62/6/X
R1702 62/6/X
TESTHI2_7
-FORCEPR [36]
-CPUSLP [20]
CPUPWROK [20]
-PROCHOT [36]
-THRMTRIP [20]
COMP0
COMP1
COMP2
COMP3
GTLREF1
BOOTSELECT
BOOTSEL
LL_ID0
R1703 62/6/X
VTT_GMCH
VTT_OL
R26 62/6/X RSVD_G6
R27 62/6 TESTHI12
R29 62/6 TESTHI1
RN104 62/8P4R
TESTHI11
TESTHI10
TESTHI8
TESTHI9
[4]
R30 100/6 CPUPWROK
C8 1N/4/X/50V
VTT_OR
RN1 330/8P4R
VID2
VID5
VID0
VID4
VID1
VID3
C304 0.1U/6/Y/25V
R35 120/6 -PROCHOT
R36 62/6/X BOOTSEL
R37 62/6/X -FORCEPR
R38 62/6 -BPM5
R39 62/6 -BPM4
RN105 62/8P4R
-BPM1
-BPM0
-BPM3
-BPM2
RN106 62/8P4R
TDO
TDI
TMS
C305 0.1U/6/Y/25V
R48 62/6 -TRST
R49 62/6 TCK
CPU
FSBSEL2 FSBSEL1 FSBSEL0 Clock
1 0 0 100MHz X
0 0 1 133MHz
0 1 1 166MHz X
0 1 0 200MHz
0 0 0 266MHz
U1D
LGA775/D/[11SC1-920775-01]
TCK
TDI
TDO
TMS
-TRST
-BPM0
-BPM1
-BPM2
-BPM3
-BPM4
-BPM5
[20,22,34,35] -SYS_RST
FSBSEL0
FSBSEL1
FSBSEL2
R1704 0/6
R1705 0/6/X
VCC
R1706 8.2K/6
Q280 2N7002/S
R1707 0/6/X
VTT_GMCH
R1708 1K/6
Q281 MMBT2222A/S
03/17
VTT_OR
R1676 680/6
VTT_PWRGD [8,34]
VTT_OUT
VTT_SEL
R52 1K/6/X
VCC3
VTT_PWRGD
C1338 1N/4/N/50V/X
-CPUSLP
C10 33P/4/N/50V
[22] FSBSEL0 R53 8.2K/6 BSEL0 [12]
[22] FSBSEL1 R54 8.2K/6 BSEL1 [12]
[22] FSBSEL2 R55 8.2K/6 BSEL2 [12]
GIGABYTE
Title
P4_LGA775-B
Size Custom
Document Number
GA-8I915ME-GL
Rev 1.02
Date: Monday, May 02, 2005
Sheet 5 of 36

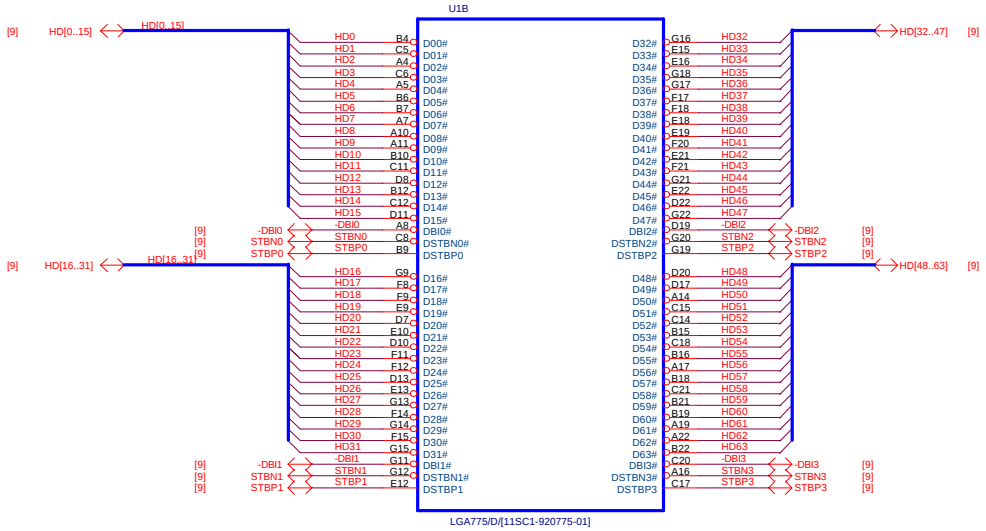

GIGABYTE

Title	P4_LGA775-C		
Size Custom	Document Number	GA-8I915ME-GL	Rev 1.02
Date: Monday, May 02, 2005	Sheet 6 of 36		

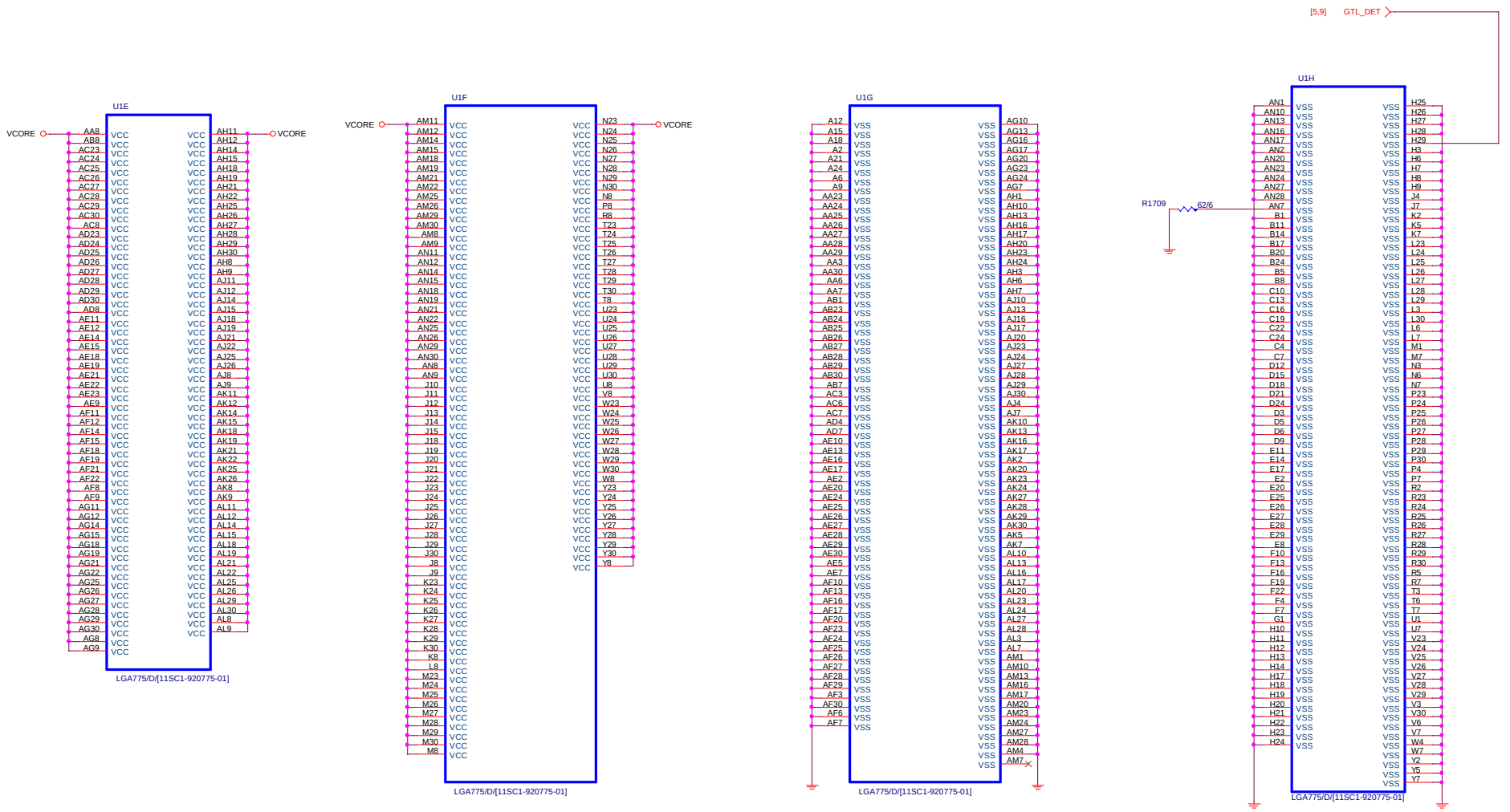

GIGABYTE

Title: P4_LGA775-D

Size: Custom | Document Number: GA-8I915ME-GL | Rev: 1.02

Date: Monday, May 02, 2005 | Sheet 7 of 36

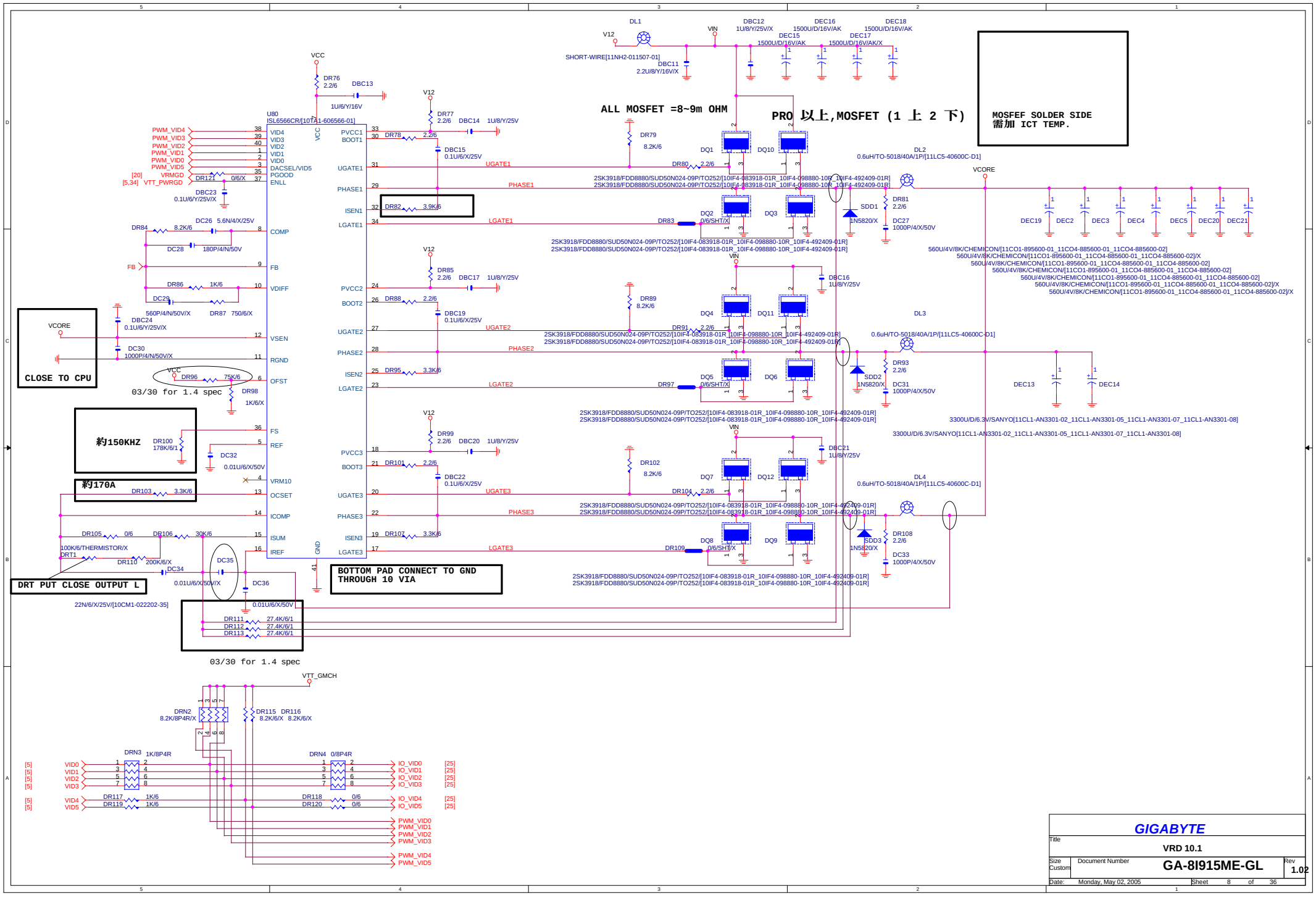

GIGABYTE

Title: VRD 10.1

Size: Custom | Document Number: GA-8I915ME-GL | Rev: 1.02

Date: Monday, May 02, 2005 | Sheet 8 of 36

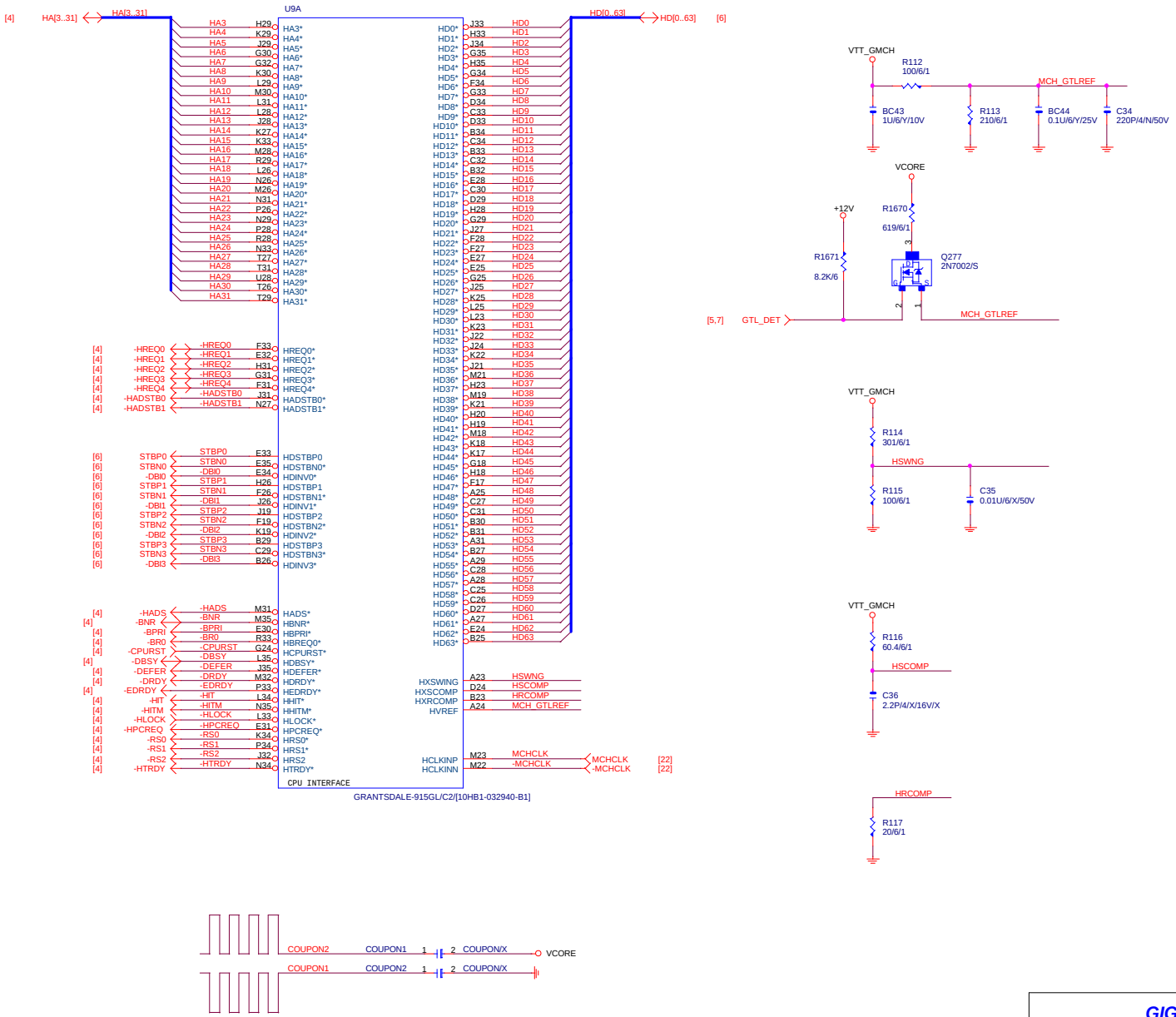

Title	GMCH-HOST
Size Custom	Document Number GA-8I915ME-GL Rev 1.02
Date: Monday, May 02, 2005	Sheet 9 of 36

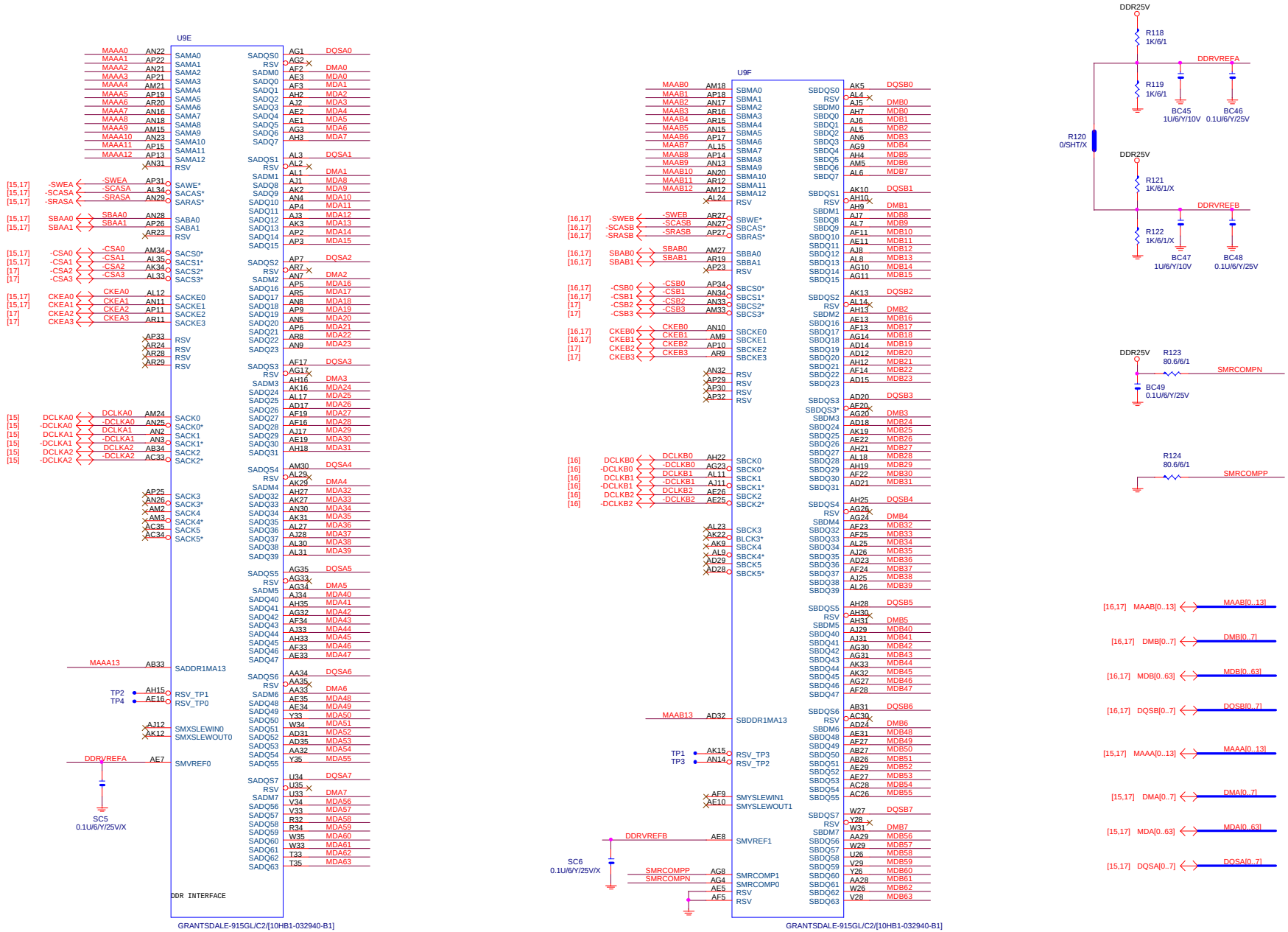

GIGABYTE

Title: GMCH-DDR

Size: Custom | Document Number: GA-8I915ME-GL | Rev: 1.02

Date: Monday, May 02, 2005 | Sheet 10 of 36

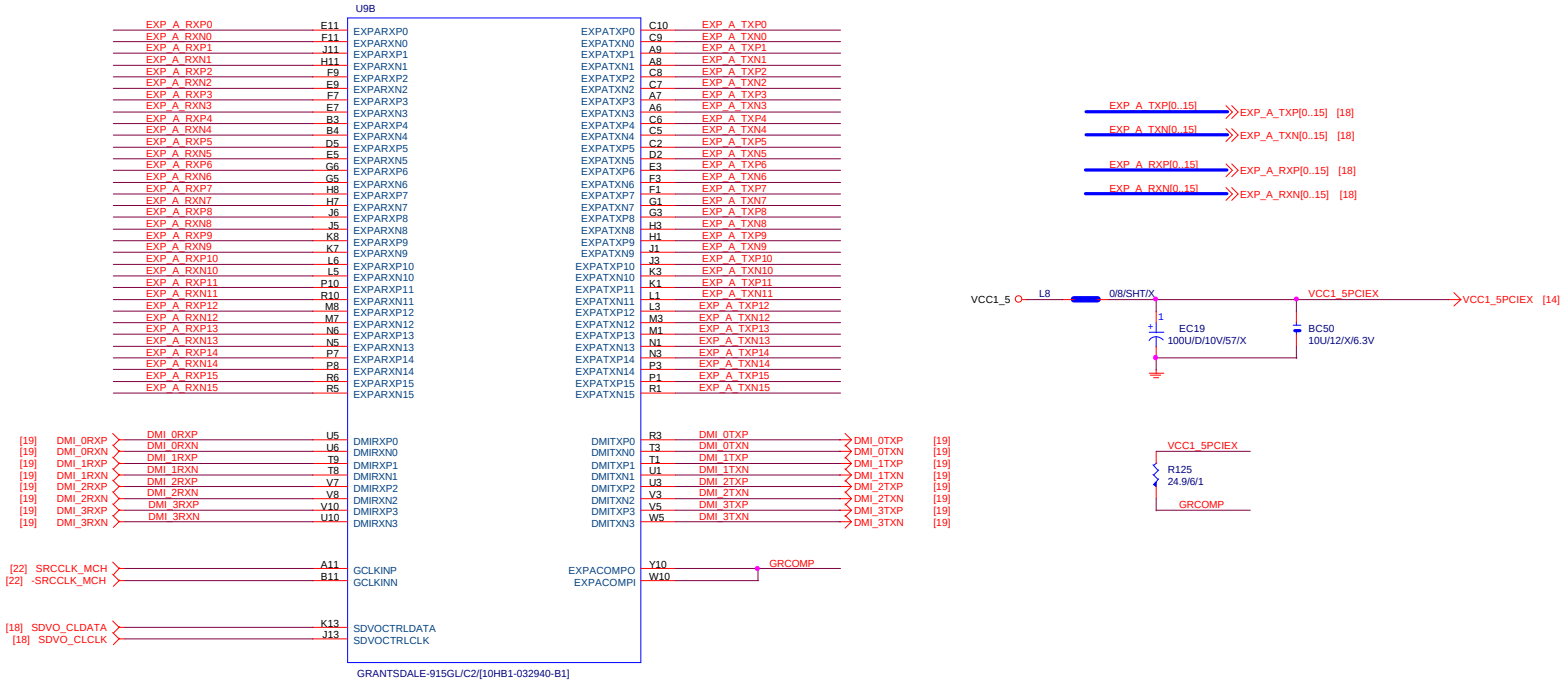

GIGABYTE

Title: GMCH-PCI E & DMI

Size: Custom | Document Number: GA-8I915ME-GL | Rev: 1.02

Date: Monday, May 02, 2005 | Sheet 11 of 36

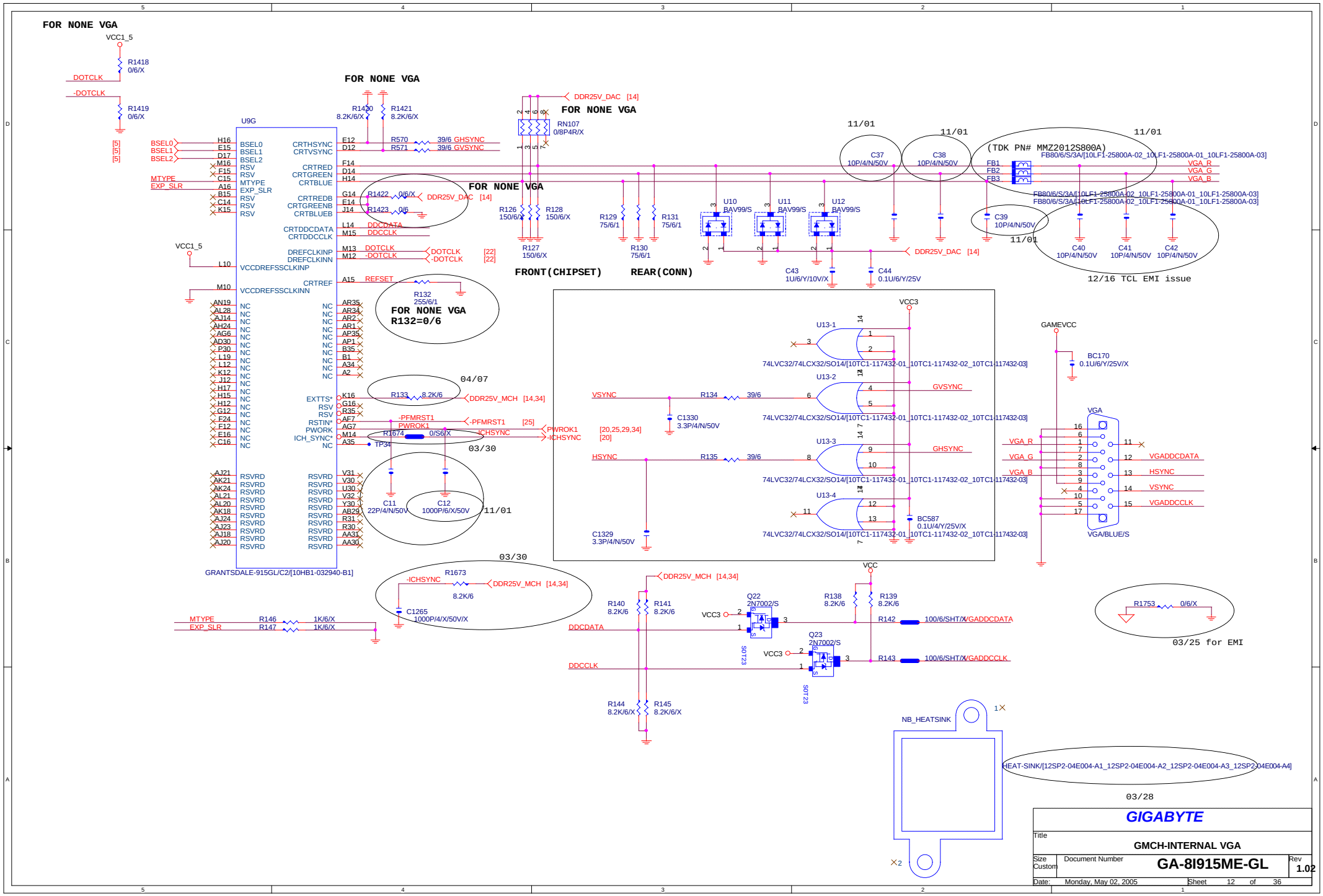
FOR NONE VGA
VCC1_5
R1418 0/6/X
DOTCLK
-DOTCLK
R1419 0/6/X
U9G
BSEL0
BSEL1
BSEL2
MTYPE
EXP_SLR
CRTHSYNC
CRTVSYNC
CRTRED
CRTGREEN
CRTBLUE
CRTREDB
CRTGREENB
CRTBLUEB
CRTDDCDATA
CRTDDCCLK
DREFCLKINP
DREFCLKINN
VCCDREFSSCLKINP
CRTREF
VCCDREFSSCLKINN
EXTTS*
RSTIN*
PWORK
ICH_SYNC*
GRANTSDALE-915GL/C2/[10HB1-032940-B1]
R1420 8.2K/6/X
R1421 8.2K/6/X
R570 39/6 GHSYNC
R571 39/6 GVSYNC
DDR25V_DAC [14]
RN107 0/8P4R/X
R1422 0/6/X
R1423 0/6
DDCDATA
DDCCLK
DOTCLK [22]
-DOTCLK [22]
REFSET
R132 255/6/1
R126 150/6/X
R128 150/6/X
R127 150/6/X
R129 75/6/1
R130 75/6/1
R131 75/6/1
U10 BAV99/S
U11 BAV99/S
U12 BAV99/S
C43 1U/6/Y/10V/X
C44 0.1U/6/Y/25V
11/01
C37 10P/4/N/50V
C38 10P/4/N/50V
(TDK PN# MMZ2012S800A)
FB80/6/S/3A/[10LF1-25800A-02_10LF1-25800A-01_10LF1-25800A-03]
FB1
FB2
FB3
VGA_R
VGA_G
VGA_B
C39 10P/4/N/50V
C40 10P/4/N/50V
C41 10P/4/N/50V
C42 10P/4/N/50V
12/16 TCL EMI issue
FRONT(CHIPSET)
REAR(CONN)
04/07
R133 8.2K/6
DDR25V_MCH [14,34]
-PFMRST1 [25]
PWROK1 [20,25,29,34]
-ICHSYNC [20]
R1674 0/S6/X
TP34
03/30
C11 22P/4/N/50V
C12 1000P/6/X/50V
VCC3
U13-1
U13-2
U13-3
U13-4
74LVC32/74LCX32/SO14/[10TC1-117432-01_10TC1-117432-02_10TC1-117432-03]
VSYNC
HSYNC
R134 39/6
R135 39/6
GVSYNC
GHSYNC
C1330 3.3P/4/N/50V
C1329 3.3P/4/N/50V
BC587 0.1U/4/Y/25V/X
GAMEVCC
BC170 0.1U/6/Y/25V/X
VGA
VGA/BLUE/S
VGADDCDATA
VGADDCCLK
R1673 8.2K/6
C1265 1000P/4/X/50V/X
R146 1K/6/X
R147 1K/6/X
VCC
Q22 2N7002/S
Q23 2N7002/S
SOT23
R140 8.2K/6
R141 8.2K/6
R138 8.2K/6
R139 8.2K/6
R142 100/6/SHT/X/VGADDCDATA
R143 100/6/SHT/X/VGADDCCLK
R144 8.2K/6/X
R145 8.2K/6/X
R1753 0/6/X
03/25 for EMI
NB_HEATSINK
HEAT-SINK/[12SP2-04E004-A1_12SP2-04E004-A2_12SP2-04E004-A3_12SP2-04E004-A4]
03/28
GIGABYTE
Title
GMCH-INTERNAL VGA
Size Custom
Document Number
GA-8I915ME-GL
Rev 1.02
Date: Monday, May 02, 2005
Sheet 12 of 36

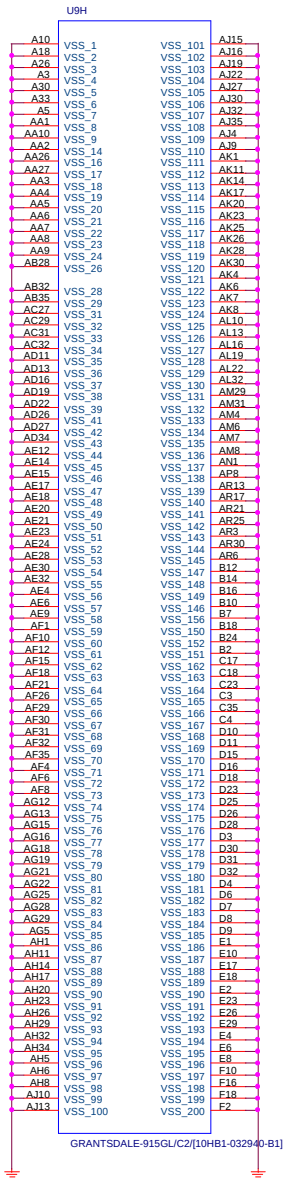

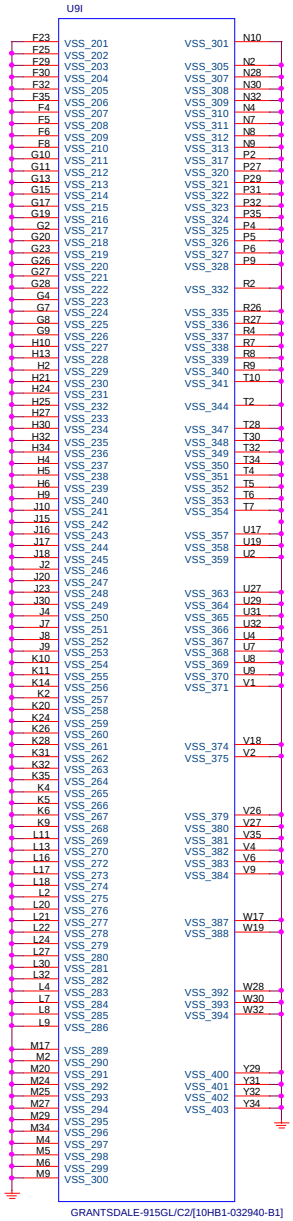

GIGABYTE			
Title	GMCH-GND		
Size Custom	Document Number	GA-8I915ME-GL	Rev 1.02
Date: Monday, May 02, 2005	Sheet 13 of 36		

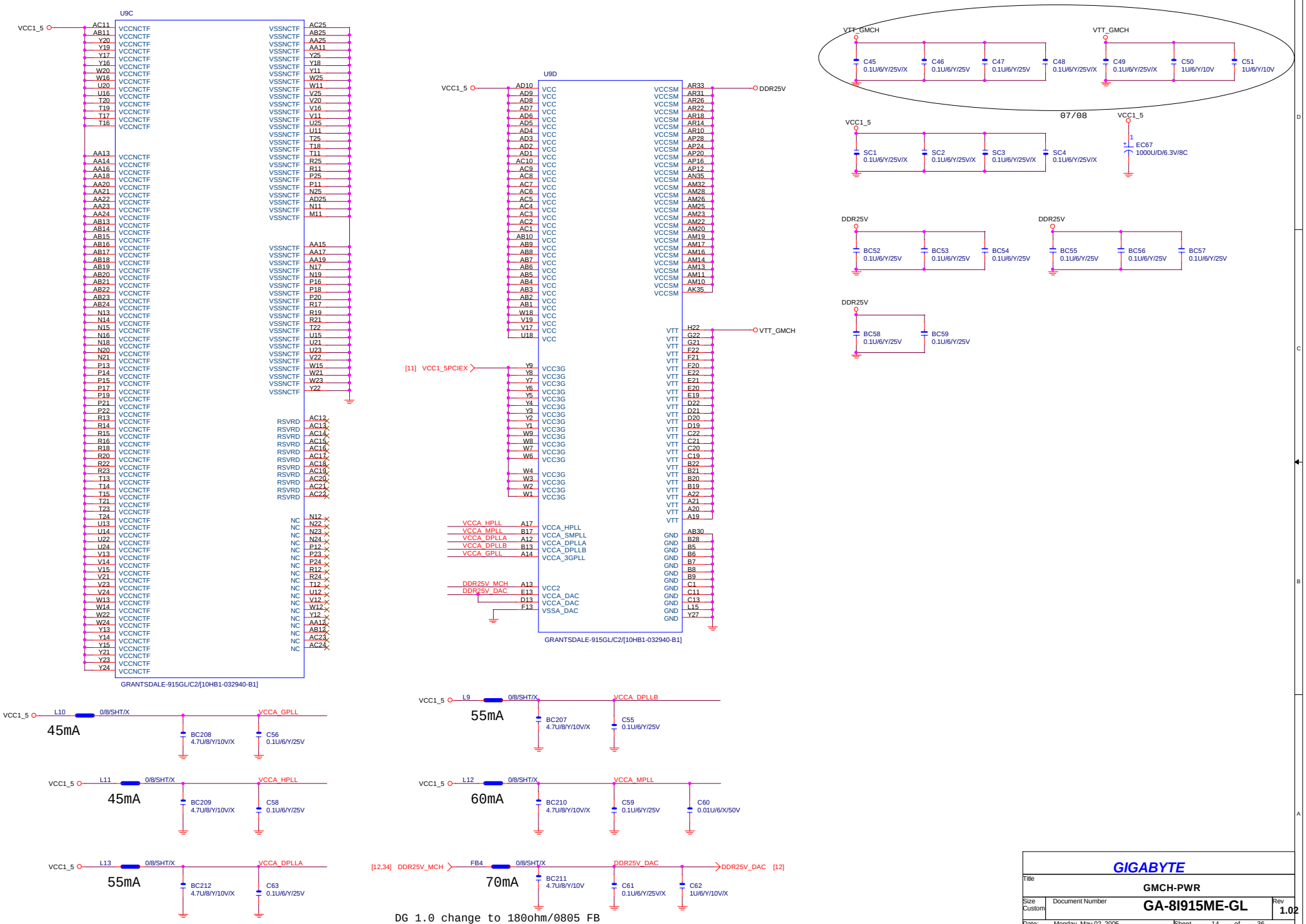
U9C
VCC1_5
VCCNCTF
VSSNCTF
RSVRD
NC
GRANTSDALE-915GL/C2/[10HB1-032940-B1]
U9D
DDR25V
VTT_GMCH
[11] VCC1_5PCIEX
VCC
VCC3G
VCCA_HPLL
VCCA_MPLL
VCCA_DPLLA
VCCA_DPLLB
VCCA_GPLL
DDR25V_MCH
DDR25V_DAC
VCCSM
VTT
GND
GRANTSDALE-915GL/C2/[10HB1-032940-B1]
VTT_GMCH
C45 0.1U/6Y/25V/X
C46 0.1U/6Y/25V
C47 0.1U/6Y/25V
C48 0.1U/6Y/25V/X
C49 0.1U/6Y/25V/X
C50 1U/6/Y/10V
C51 1U/6/Y/10V
07/08
VCC1_5
SC1 0.1U/6Y/25V/X
SC2 0.1U/6Y/25V/X
SC3 0.1U/6Y/25V/X
SC4 0.1U/6Y/25V/X
EC67 1000U/D/6.3V/8C
DDR25V
BC52 0.1U/6Y/25V
BC53 0.1U/6Y/25V
BC54 0.1U/6Y/25V
BC55 0.1U/6Y/25V
BC56 0.1U/6Y/25V
BC57 0.1U/6Y/25V
BC58 0.1U/6Y/25V
BC59 0.1U/6Y/25V
L10 0/8/SHT/X
VCCA_GPLL
45mA
BC208 4.7U/8/Y/10V/X
C56 0.1U/6Y/25V
L9 0/8/SHT/X
VCCA_DPLLB
55mA
BC207 4.7U/8/Y/10V/X
C55 0.1U/6Y/25V
L11 0/8/SHT/X
VCCA_HPLL
45mA
BC209 4.7U/8/Y/10V/X
C58 0.1U/6Y/25V
L12 0/8/SHT/X
VCCA_MPLL
60mA
BC210 4.7U/8/Y/10V/X
C59 0.1U/6Y/25V
C60 0.01U/6/X/50V
L13 0/8/SHT/X
VCCA_DPLLA
55mA
BC212 4.7U/8/Y/10V/X
C63 0.1U/6Y/25V
[12,34] DDR25V_MCH
FB4 0/8/SHT/X
DDR25V_DAC
DDR25V_DAC [12]
70mA
BC211 4.7U/8/Y/10V
C61 0.1U/6Y/25V/X
C62 1U/6/Y/10V/X
DG 1.0 change to 180ohm/0805 FB
GIGABYTE
Title
GMCH-PWR
Size Custom
Document Number
GA-8I915ME-GL
Rev 1.02
Date: Monday, May 02, 2005
Sheet 14 of 36

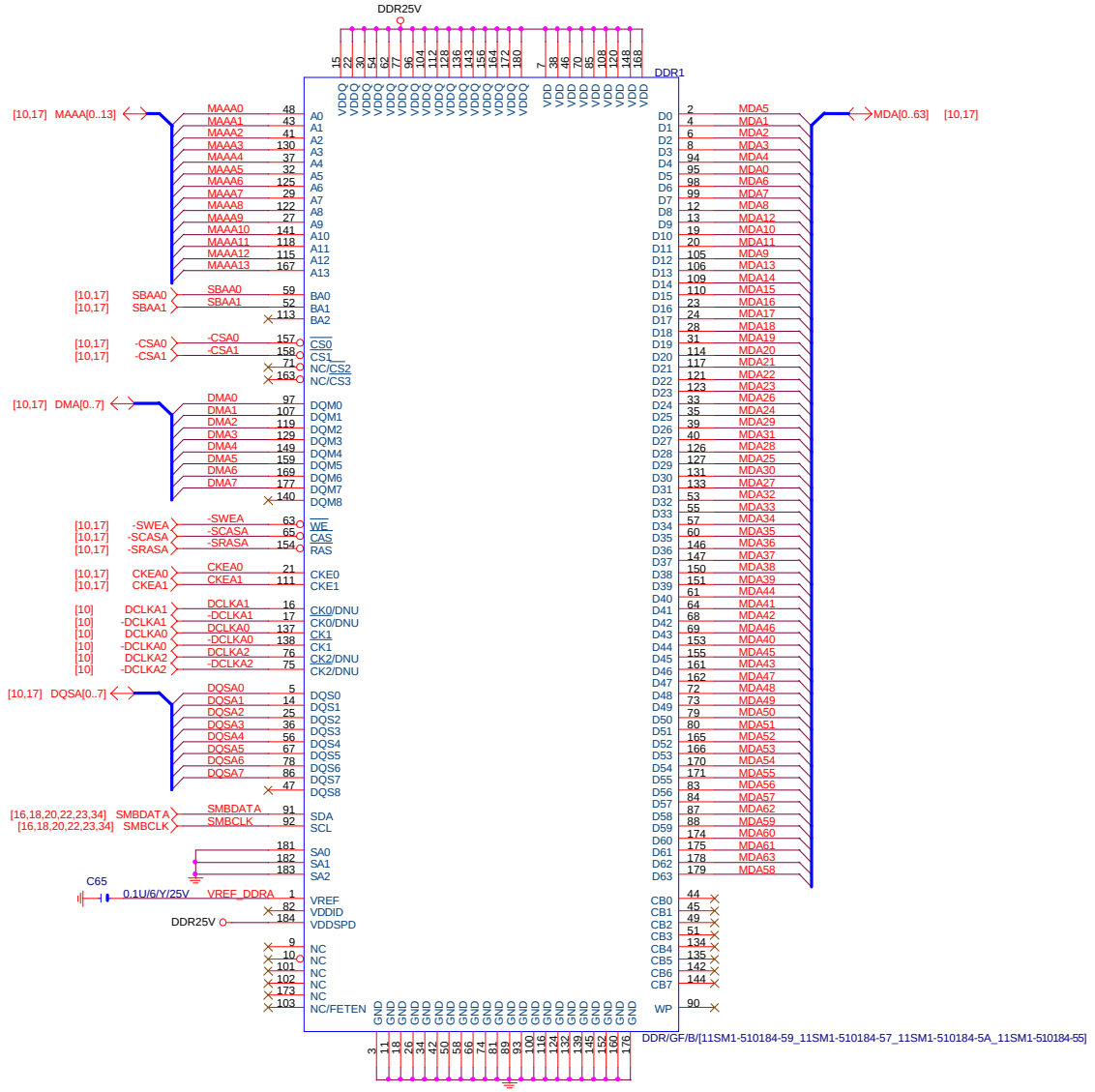

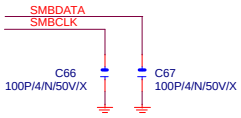

GIGABYTE		
Title	DDR CHANNEL A	
Size B	Document Number GA-8I915ME-GL	Rev 1.02
Date: Monday, May 02, 2005	Sheet 15 of 36	

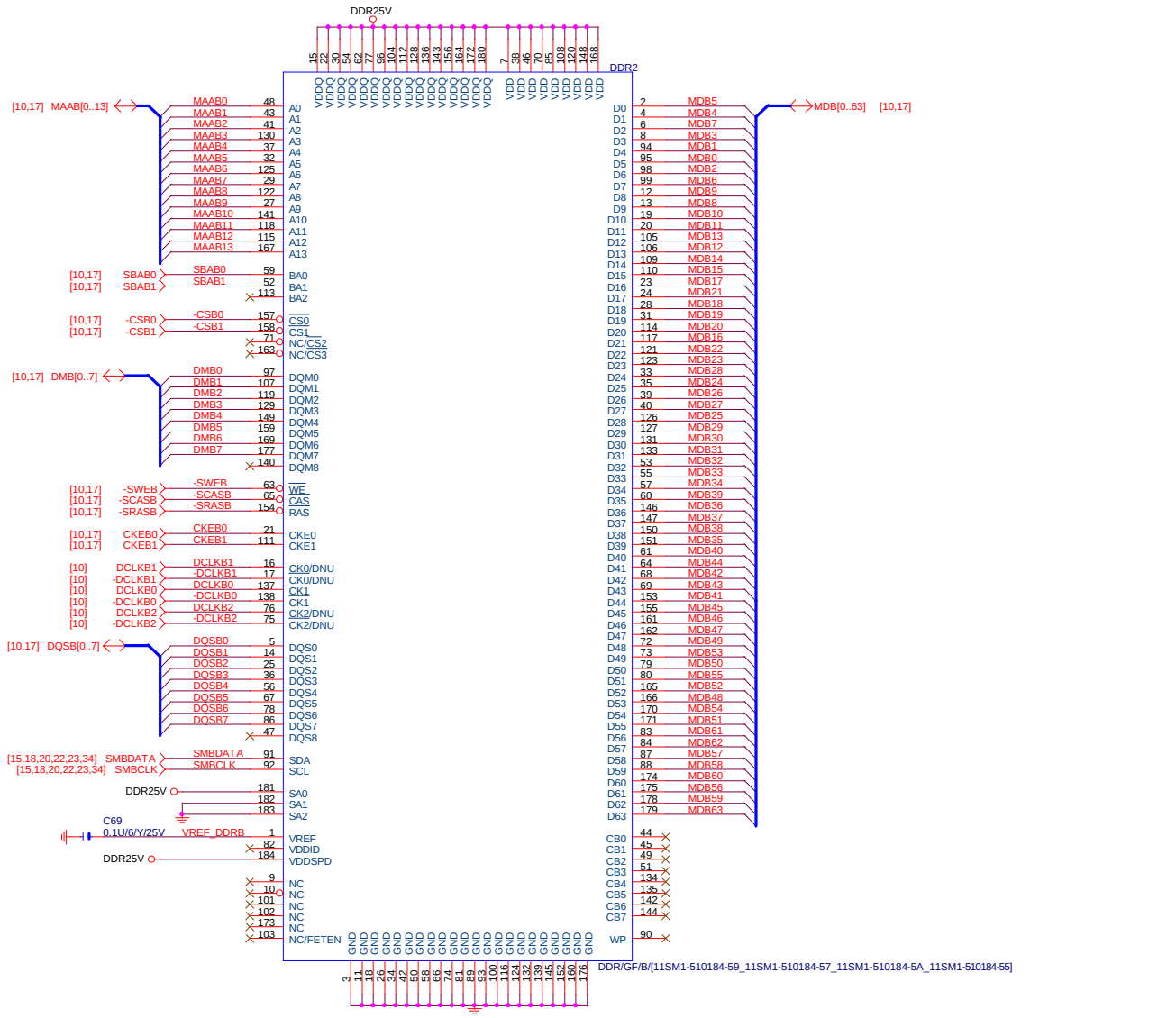

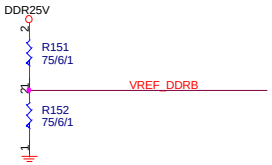

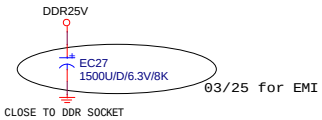

03/25 for EMI

GIGABYTE

Title	DDR CHANNEL B	
Size B	Document Number GA-8I915ME-GL	Rev 1.02
Date: Monday, May 02, 2005	Sheet 16 of 36	

DDR TERMINATION CHANNEL A

DDRVTT Decouple

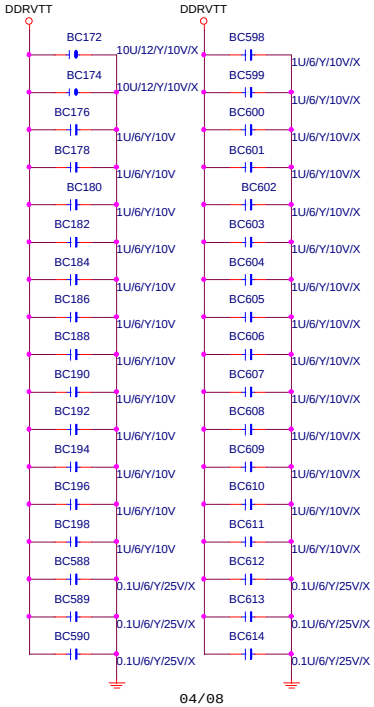

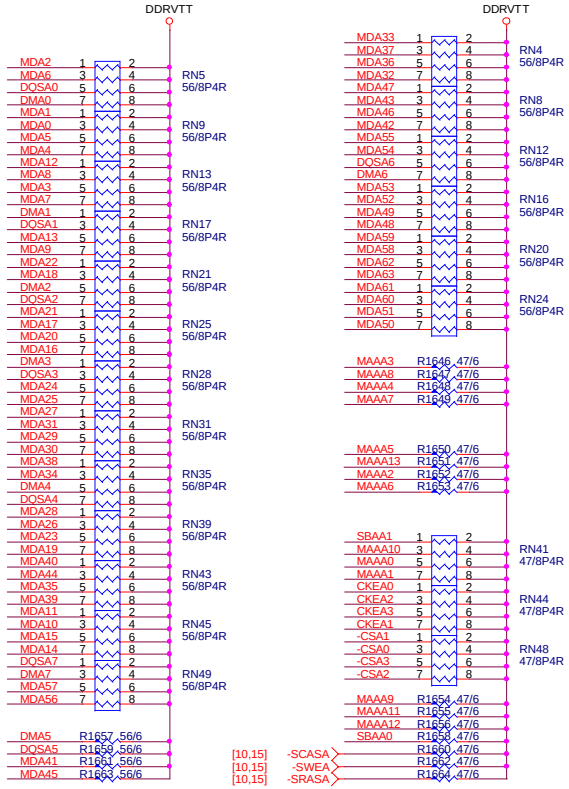

DDR25V Decouple

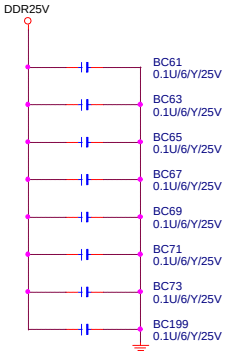

47 Ohms

SBAA[0:1] — SBAA[0:1] [10,15]
-CSA[0:3] — -CSA[0:3] [10,15]
CKEA[0:3] — CKEA[0:3] [10,15]
MAAA[0..13] — MAAA[0..13] [10,15]

56 Ohms

DQSA[0..7] — DQSA[0..7] [10,15]
DMA[0..7] — DMA[0..7] [10,15]
MDA[0..63] — MDA[0..63] [10,15]

CHANNEL B

DDRVTT Decouple

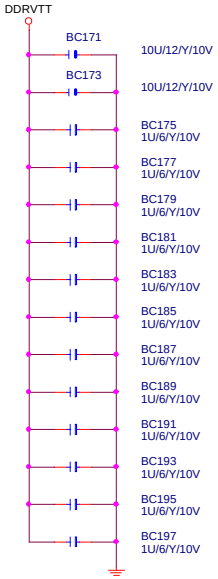

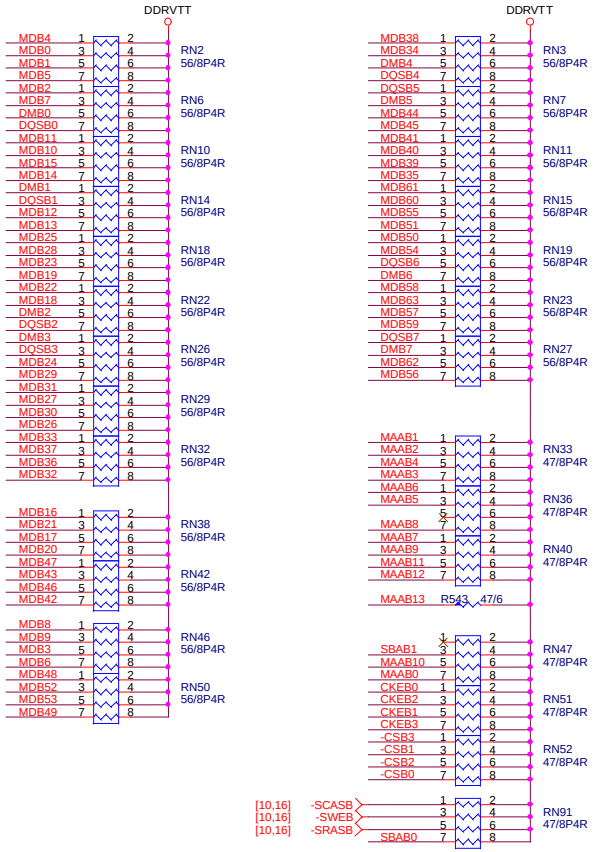

DDR25V Decouple

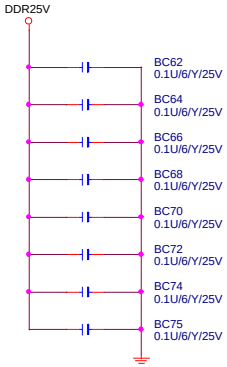

47 Ohms

SBAB[0:1] — SBAB[0:1] [10,16]
-CSB[0:3] — -CSB[0:3] [10,16]
CKEB[0:3] — CKEB[0:3] [10,16]
MAAB[0..13] — MAAB[0..13] [10,16]

56 Ohms

DQSB[0..7] — DQSB[0..7] [10,16]
DMB[0..7] — DMB[0..7] [10,16]
MDB[0..63] — MDB[0..63] [10,16]

GIGABYTE			
Title	DDR TERMINATOR		
Size B	Document Number	GA-8I915ME-GL	Rev 1.02
Date: Monday, May 02, 2005	Sheet 17 of 36		

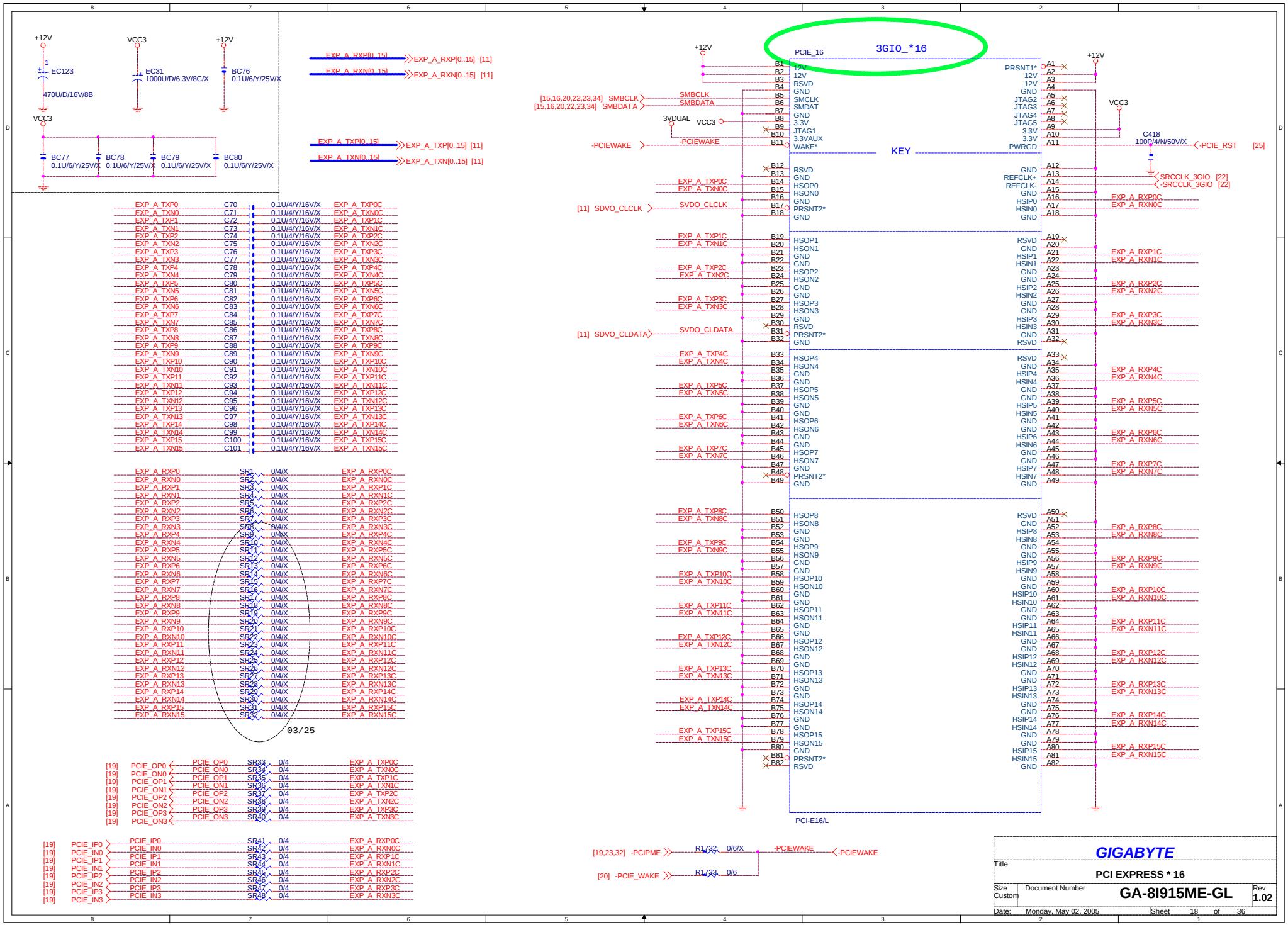
3GIO_*16
PCIE_16
KEY
PCI-E16/L
+12V
VCC3
3VDUAL
EC123
470U/D/16V/8B
EC31
1000U/D/6.3V/8C/X
BC76
0.1U/6/Y/25V/X
BC77
BC78
BC79
BC80
EXP_A_RXP[0..15]
EXP_A_RXN[0..15]
EXP_A_TXP[0..15]
EXP_A_TXN[0..15]
SMBCLK
SMBDATA
-PCIEWAKE
SVDO_CLCLK
SVDO_CLDATA
PRSNT1*
JTAG2
JTAG3
JTAG4
JTAG5
PWRGD
C418
100P/4/N/50V/X
-PCIE_RST
SRCCLK_3GIO
-SRCCLK_3GIO
REFCLK+
REFCLK-
PCIE_OP0
PCIE_ON0
PCIE_OP1
PCIE_ON1
PCIE_OP2
PCIE_ON2
PCIE_OP3
PCIE_ON3
PCIE_IP0
PCIE_IN0
PCIE_IP1
PCIE_IN1
PCIE_IP2
PCIE_IN2
PCIE_IP3
PCIE_IN3
03/25
-PCIPME
R1732
R1733
GIGABYTE
Title
PCI EXPRESS * 16
Size
Custom
Document Number
GA-8I915ME-GL
Rev
1.02
Date:
Monday, May 02, 2005
Sheet
18
of
36

DMI Connection Note
GMCH TX Pin Need Connect to ICH6 RX Pin
ICH6 TX Pin Need Connect to GMCH RX Pin

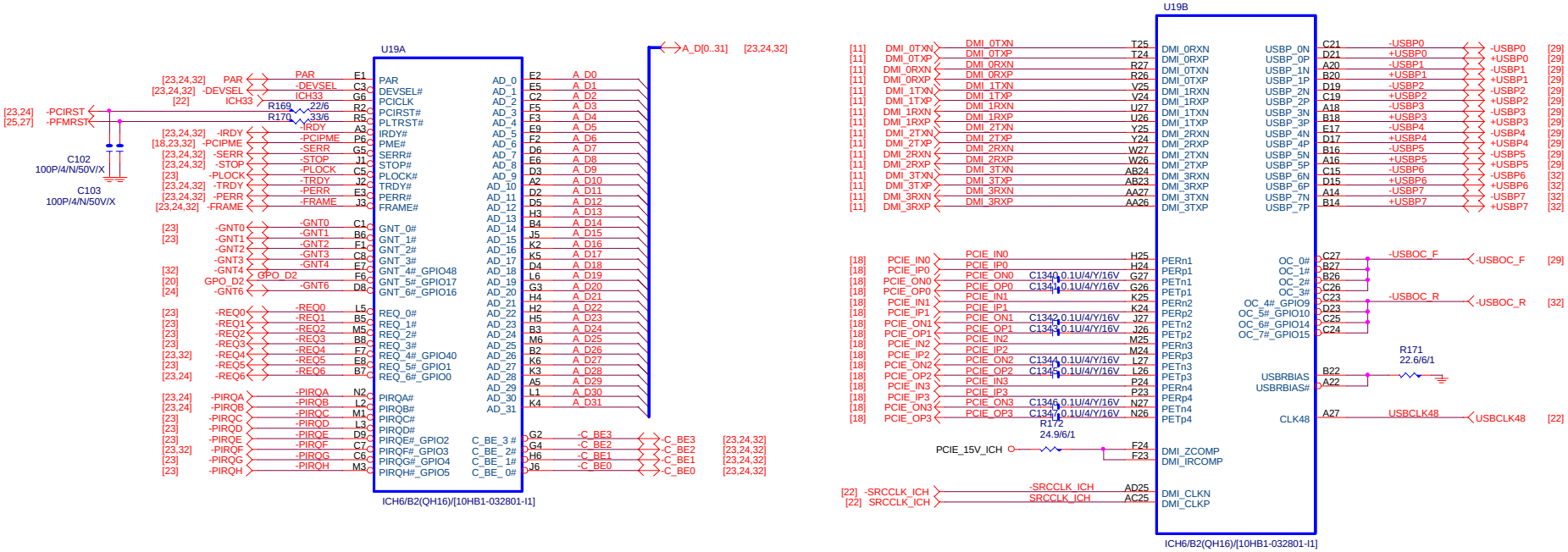

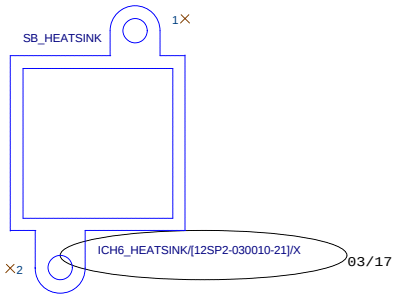

GIGABYTE

Title	ICH6-PCI, DMI, LAN, USB		
Size B	Document Number	GA-8I915ME-GL	Rev 1.02
Date: Monday, May 02, 2005	Sheet 19 of 36		

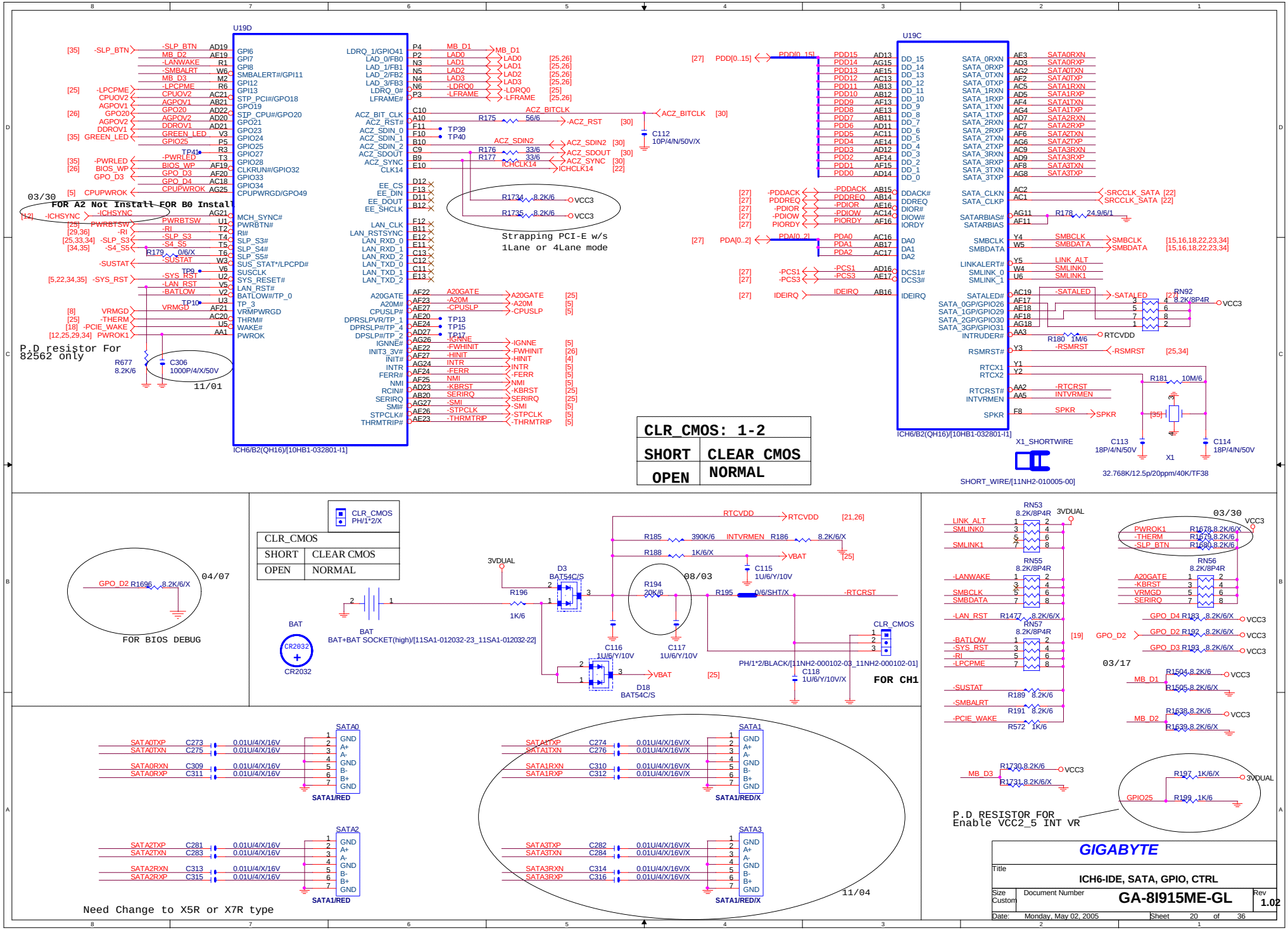
U19D
ICH6/B2(QH16)/[10HB1-032801-I1]
03/30
FOR A2 Not Install FOR B0 Install
P.D resistor For 82562 only
11/01
Strapping PCI-E w/s 1Lane or 4Lane mode
U19C
ICH6/B2(QH16)/[10HB1-032801-I1]
X1_SHORTWIRE
SHORT_WIRE/[11NH2-010005-00]
32.768K/12.5p/20ppm/40K/TF38
CLR_CMOS: 1-2
SHORT CLEAR CMOS
OPEN NORMAL
04/07
FOR BIOS DEBUG
CLR_CMOS
PH/1*2/X
CLR_CMOS
SHORT CLEAR CMOS
OPEN NORMAL
BAT
CR2032
BAT+BAT SOCKET(high)/[11SA1-012032-23_11SA1-012032-22]
08/03
PH/1*2/BLACK/[11NH2-000102-03_11NH2-000102-01]
FOR CH1
03/30
03/17
P.D RESISTOR FOR Enable VCC2_5 INT VR
SATA1/RED
SATA1/RED/X
11/04
Need Change to X5R or X7R type
GIGABYTE
Title
ICH6-IDE, SATA, GPIO, CTRL
Size Custom
Document Number
GA-8I915ME-GL
Rev 1.02
Date: Monday, May 02, 2005
Sheet 20 of 36

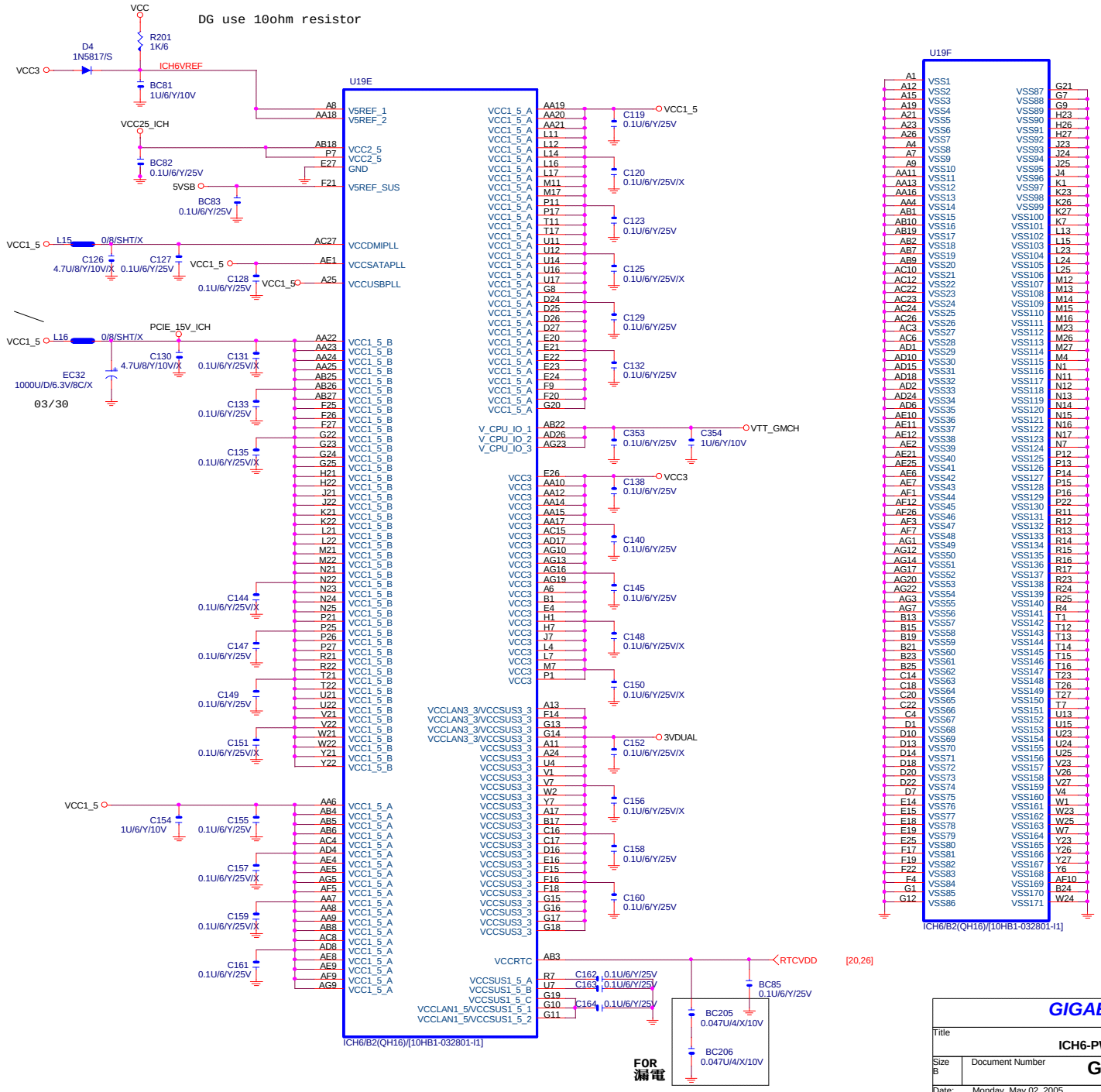

GIGABYTE			
Title	ICH6-PWR & GND		
Size B	Document Number GA-8I915ME-GL		Rev 1.02
Date: Monday, May 02, 2005	Sheet 21 of 36		

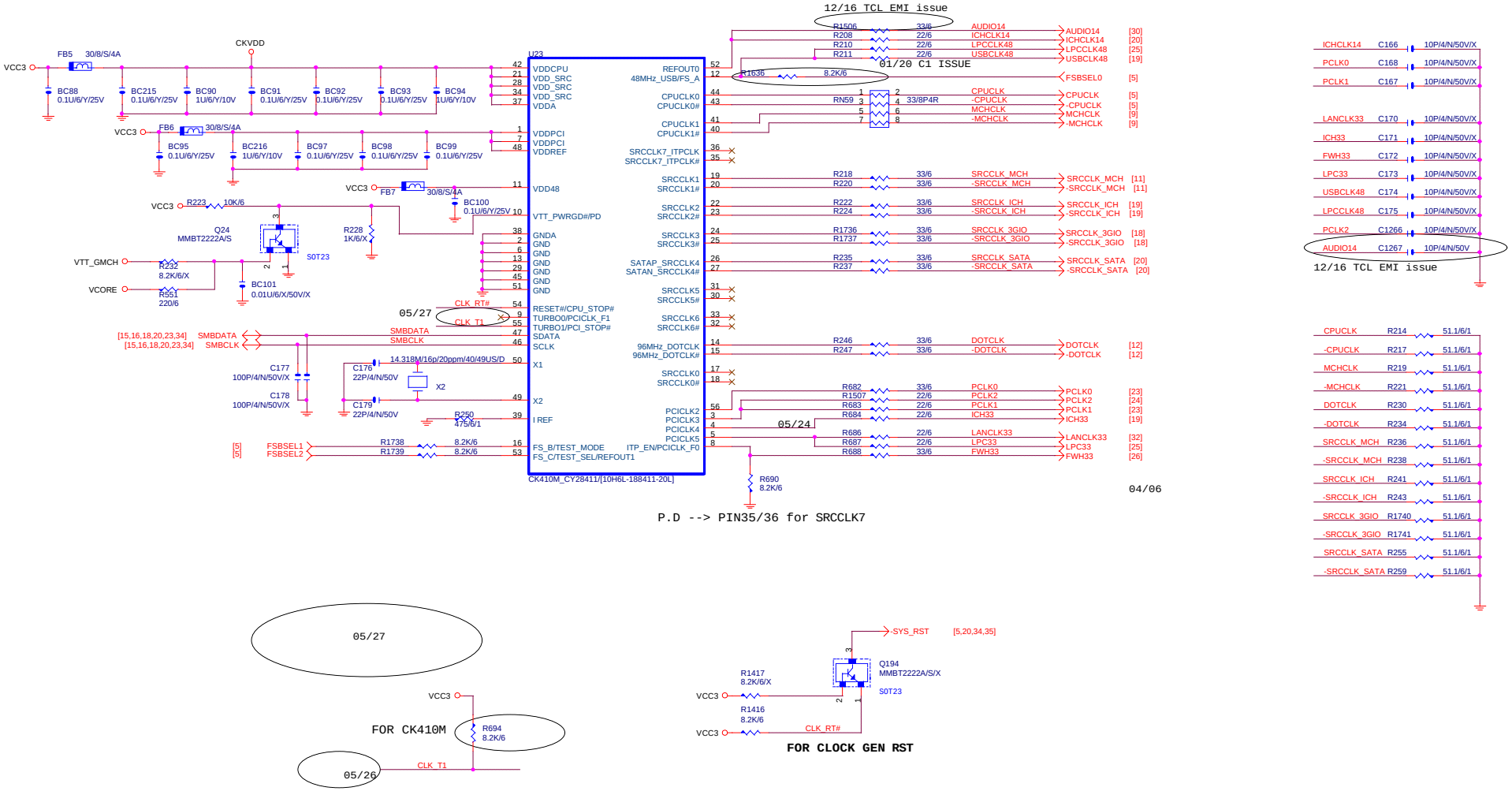

GIGABYTE

Title	CK410M/GBT_CLK GEN		
Size Custom	Document Number GA-8I915ME-GL		Rev 1.02
Date: Monday, May 02, 2005		Sheet 22 of 36	

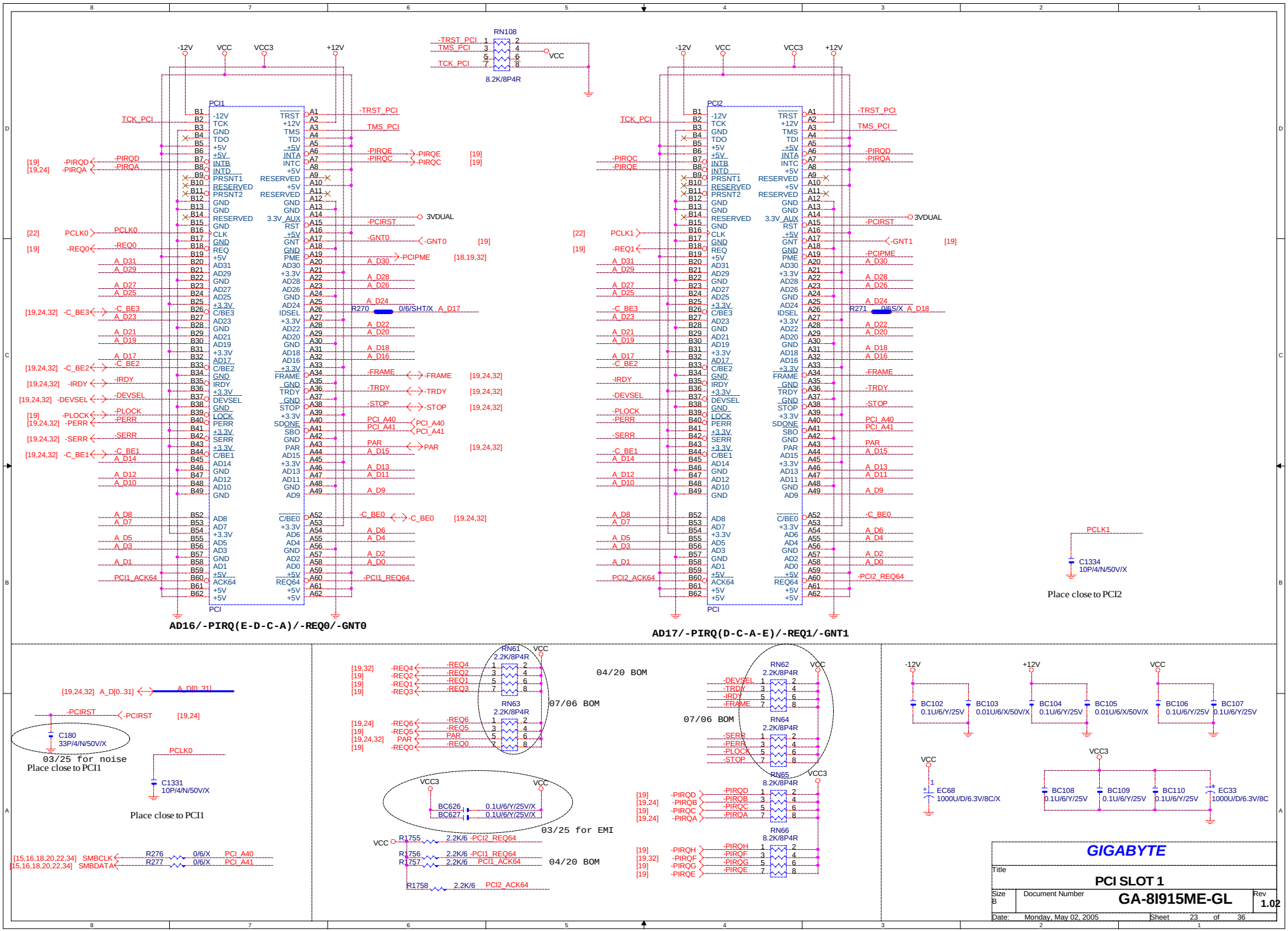
RN108
8.2K/8P4R
PCI1
PCI
AD16/-PIRQ(E-D-C-A)/-REQ0/-GNT0
PCI2
AD17/-PIRQ(D-C-A-E)/-REQ1/-GNT1
PCLK1
C1334
10P/4/N/50V/X
Place close to PCI2
RN61
2.2K/8P4R
RN62
2.2K/8P4R
RN63
2.2K/8P4R
RN64
2.2K/8P4R
RN65
8.2K/8P4R
RN66
8.2K/8P4R
04/20 BOM
07/06 BOM
07/06 BOM
03/25 for EMI
04/20 BOM
C180
33P/4/N/50V/X
03/25 for noise
Place close to PCI1
PCLK0
C1331
10P/4/N/50V/X
Place close to PCI1
BC102
0.1U/6/Y/25V
BC103
0.01U/6/X/50V/X
BC104
0.1U/6/Y/25V
BC105
0.01U/6/X/50V/X
BC106
0.1U/6/Y/25V
BC107
0.1U/6/Y/25V
EC68
1000U/D/6.3V/8C/X
BC108
0.1U/6/Y/25V
BC109
0.1U/6/Y/25V
BC110
0.1U/6/Y/25V
EC33
1000U/D/6.3V/8C
GIGABYTE
Title
PCI SLOT 1
Size
B
Document Number
GA-8I915ME-GL
Rev
1.02
Date: Monday, May 02, 2005
Sheet 23 of 36

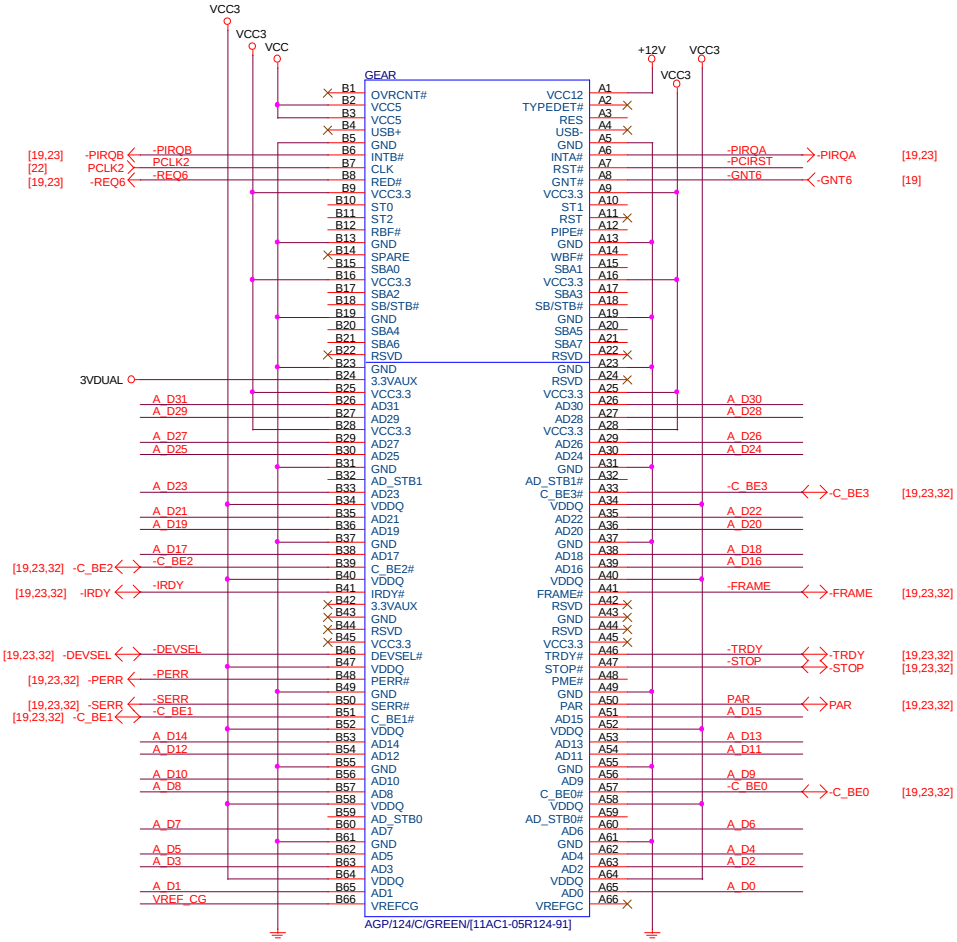

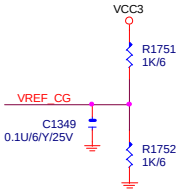

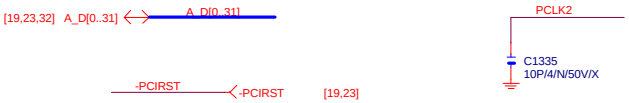

Place close to PCI2

GIGABYTE

Title: **PCI SLOT 3**

Size: B | Document Number: **GA-8I915ME-GL** | Rev: **1.02**

Date: Monday, May 02, 2005 | Sheet 24 of 36

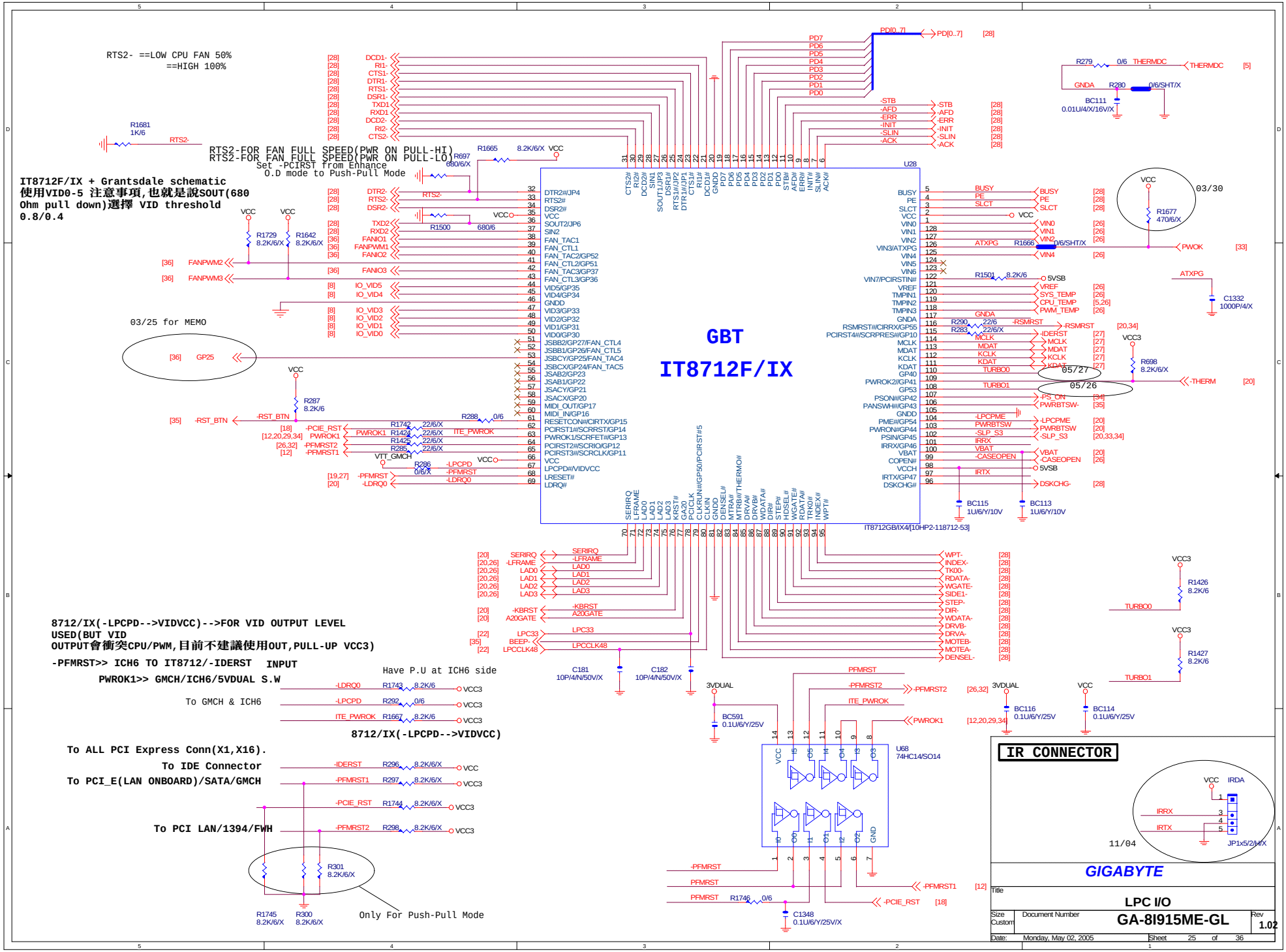
RTS2- ==LOW CPU FAN 50%
==HIGH 100%
RTS2-FOR FAN FULL SPEED(PWR ON PULL-HI)
RTS2-FOR FAN FULL SPEED(PWR ON PULL-LO)
Set -PCIRST from Enhance
O.D mode to Push-Pull Mode
IT8712F/IX + Grantsdale schematic
使用VID0-5 注意事項,也就是說SOUT(680
Ohm pull down)選擇 VID threshold
0.8/0.4
03/25 for MEMO
GBT
IT8712F/IX
U28
IT8712GB/IX4/[10HP2-118712-53]
8712/IX(-LPCPD-->VIDVCC)-->FOR VID OUTPUT LEVEL
USED(BUT VID
OUTPUT會衝突CPU/PWM,目前不建議使用OUT,PULL-UP VCC3)
-PFMRST>> ICH6 TO IT8712/-IDERST INPUT
PWROK1>> GMCH/ICH6/5VDUAL S.W
Have P.U at ICH6 side
To GMCH & ICH6
8712/IX(-LPCPD-->VIDVCC)
To ALL PCI Express Conn(X1,X16).
To IDE Connector
To PCI_E(LAN ONBOARD)/SATA/GMCH
To PCI LAN/1394/FWH
Only For Push-Pull Mode
U68
74HC14/SO14
IR CONNECTOR
JP1x5/2/HX
11/04
GIGABYTE
Title
LPC I/O
Size
Custom
Document Number
GA-8I915ME-GL
Rev
1.02
Date: Monday, May 02, 2005
Sheet 25 of 36

TEMP. SENSE

CPU/SYS FAN

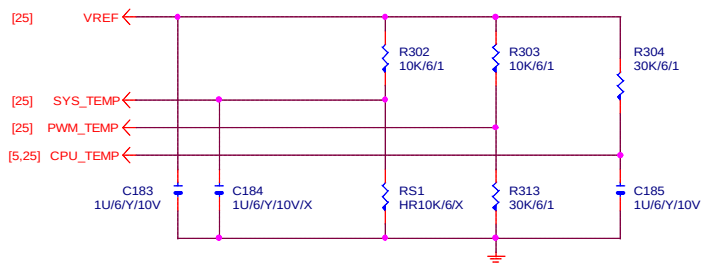

CASE OPEN (N/A)

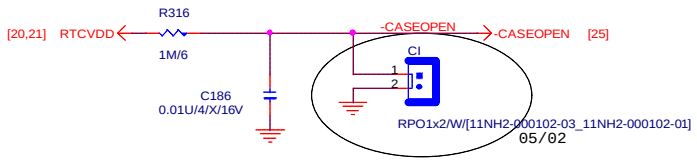

VOLTAGE SENSE

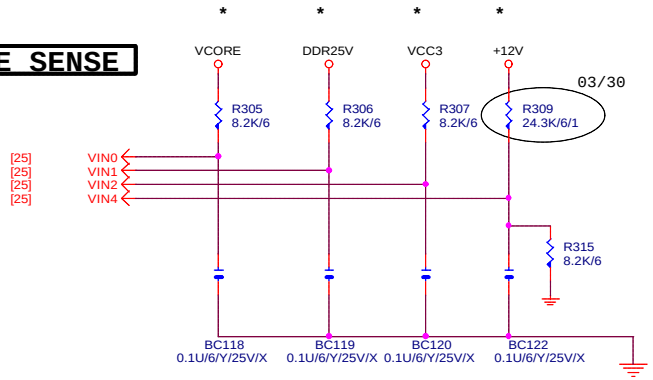

FWH BIOS

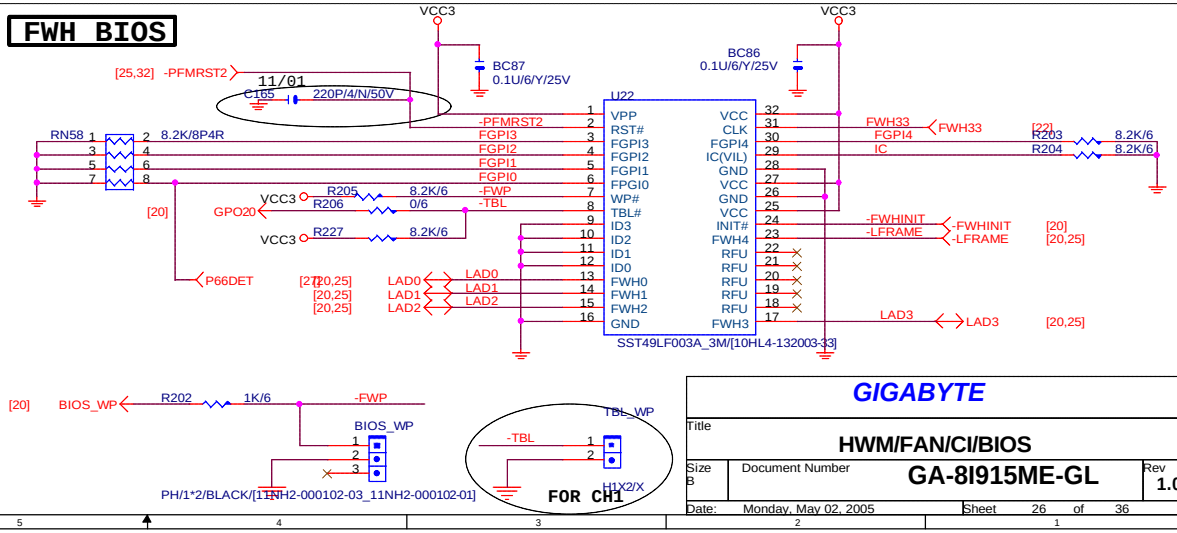

GIGABYTE			
Title	HWM/FAN/CI/BIOS		
Size B	Document Number	GA-8I915ME-GL	Rev 1.02
Date: Monday, May 02, 2005	Sheet 26 of 36		

KB/MS

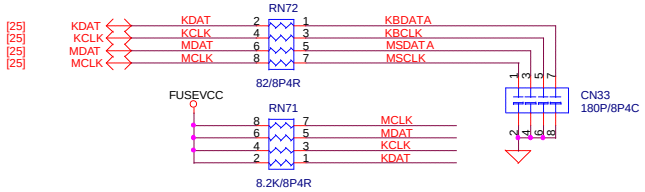

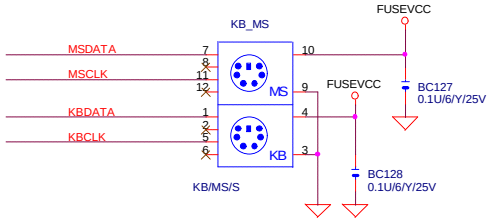

IDE

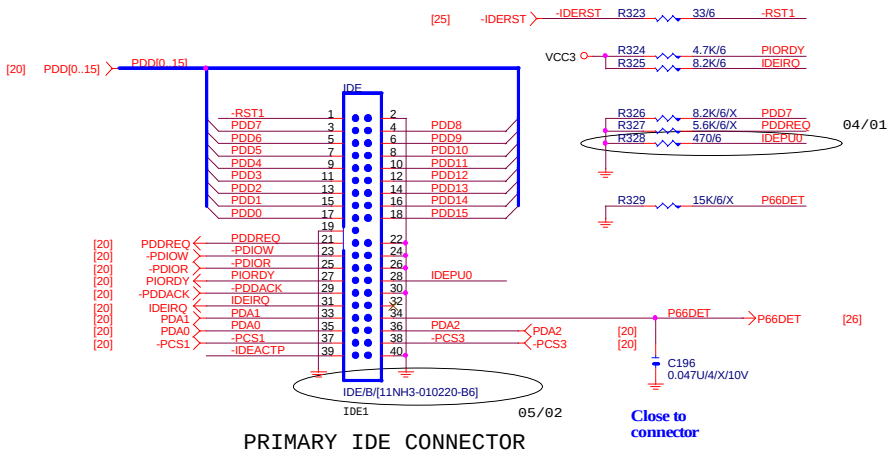

PRIMARY IDE CONNECTOR

IDE RESET

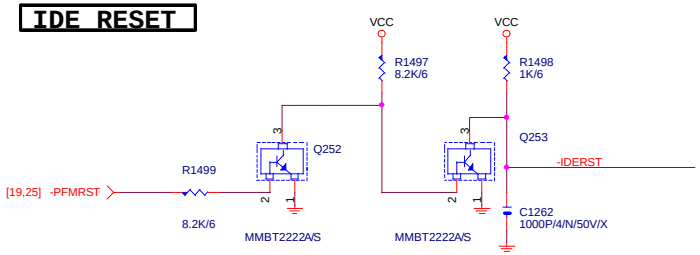

IDE/SATA LED

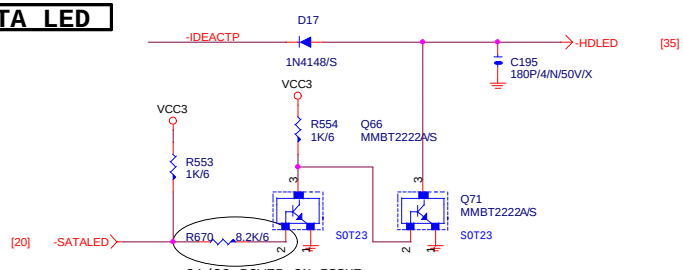

01/20 POWER ON ISSUE

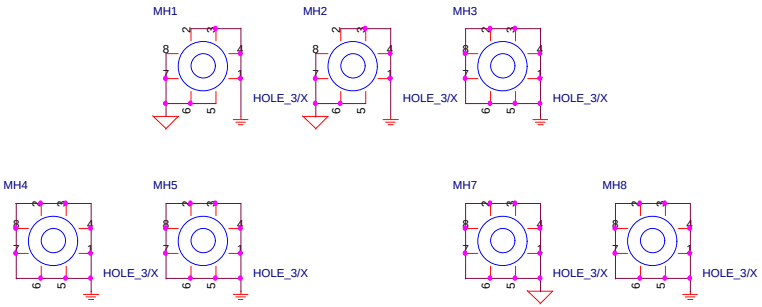

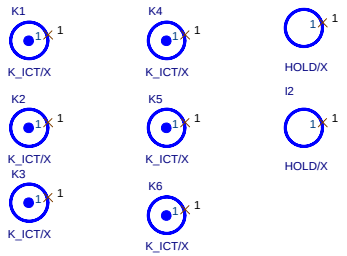

GIGABYTE	
Title	PS/2 KB & MS
Size B	Document Number GA-8I915ME-GL Rev 1.02
Date: Monday, May 02, 2005	Sheet 27 of 36

COMA/COMB

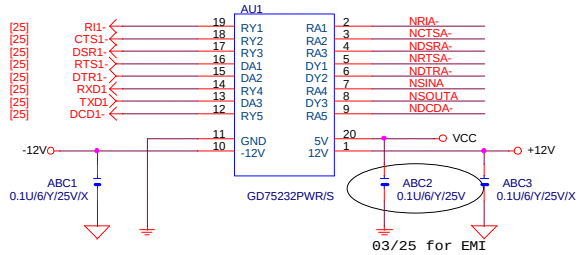

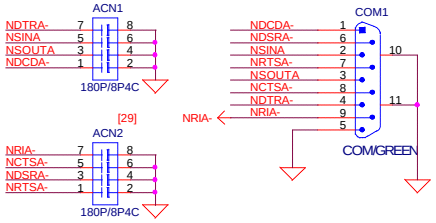

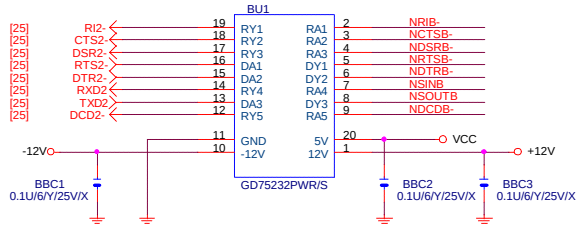

INTERNAL COMB

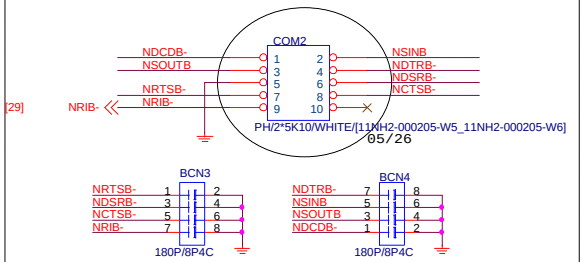

LPT

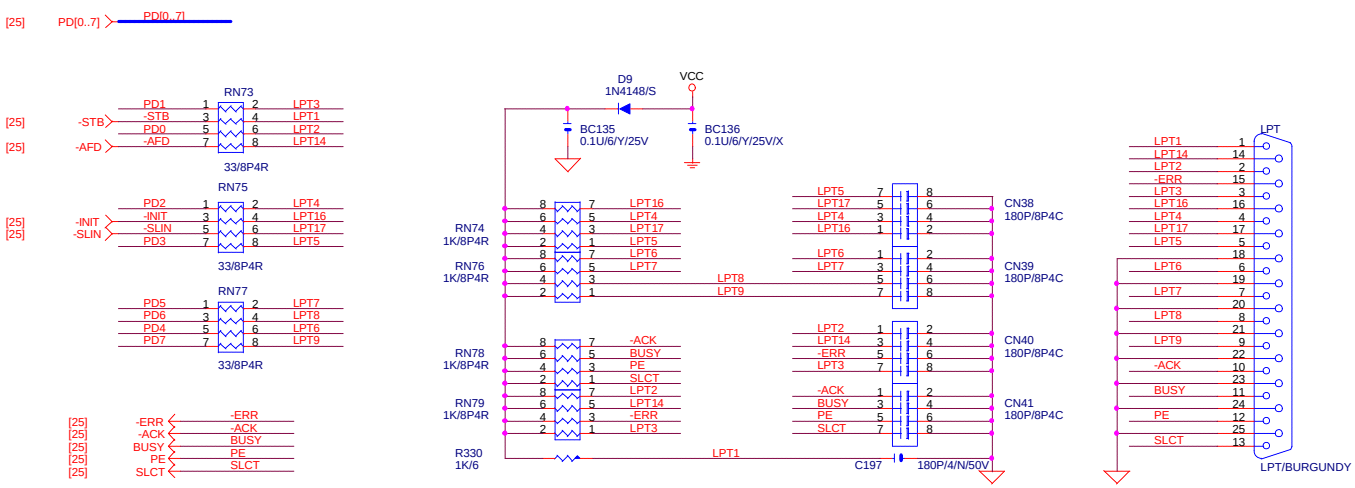

FLOPPY

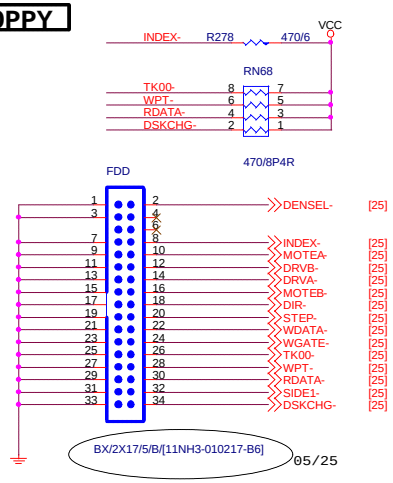

GIGABYTE

Title	COM, LPT, FDD		
Size B	Document Number	GA-8I915ME-GL	Rev 1.02
Date: Monday, May 02, 2005	Sheet 28 of 36		

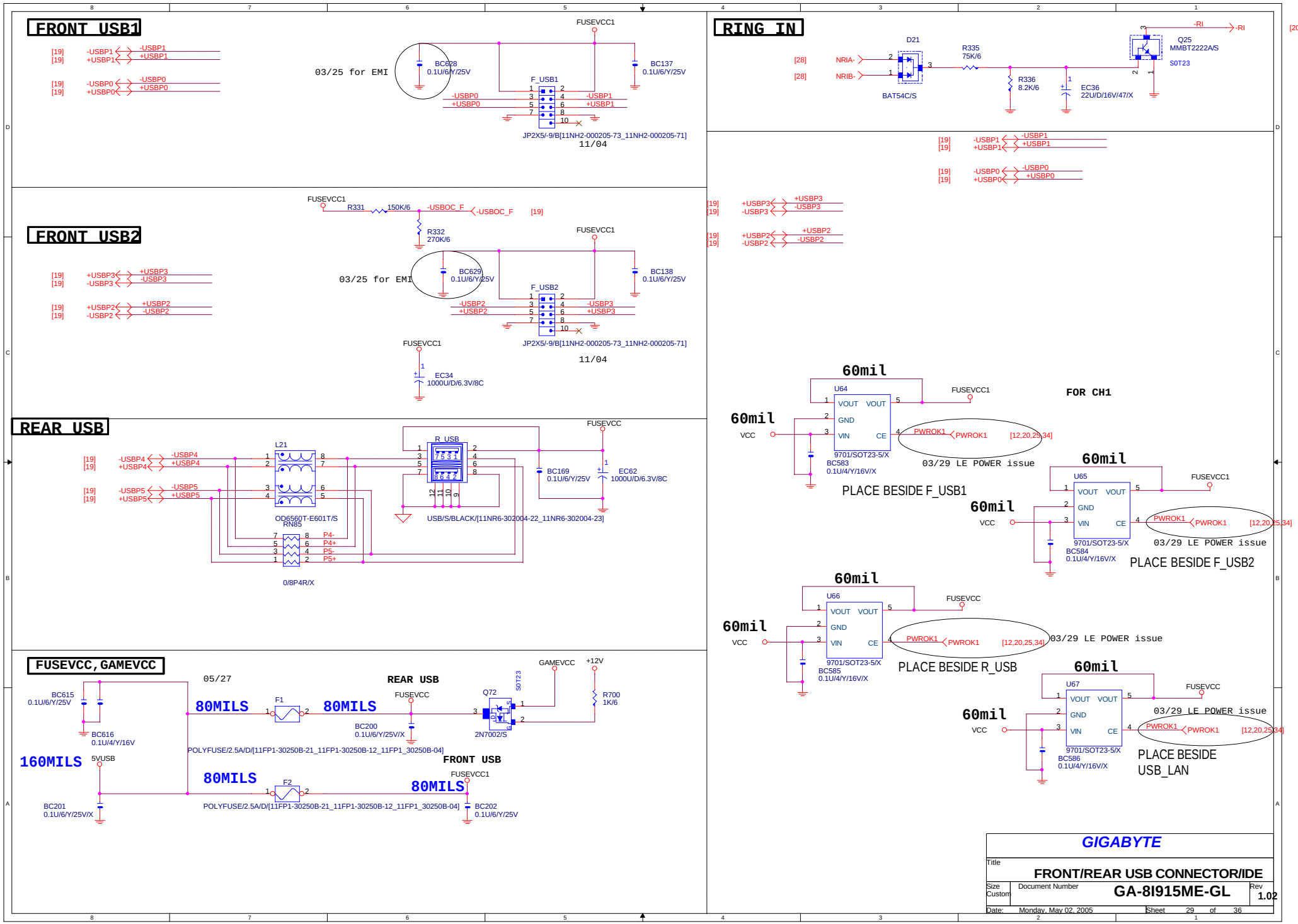
FRONT USB1
FUSEVCC1
03/25 for EMI
BC628
0.1U/6/Y/25V
BC137
0.1U/6/Y/25V
F_USB1
-USBP0
+USBP0
-USBP1
+USBP1
JP2X5/-9/B[11NH2-000205-73_11NH2-000205-71]
11/04
FRONT USB2
R331
150K/6
-USBOC_F
R332
270K/6
BC629
0.1U/6/Y/25V
BC138
0.1U/6/Y/25V
F_USB2
-USBP2
+USBP2
-USBP3
+USBP3
EC34
1000U/D/6.3V/8C
REAR USB
FUSEVCC
L21
OD6560T-E601T/S
R_USB
USB/S/BLACK/[11NR6-302004-22_11NR6-302004-23]
BC169
0.1U/6/Y/25V
EC62
1000U/D/6.3V/8C
RN85
0/8P4R/X
P4-
P4+
P5-
P5+
FUSEVCC,GAMEVCC
05/27
BC615
0.1U/6/Y/25V
BC616
0.1U/4/Y/16V
80MILS
F1
POLYFUSE/2.5A/D/[11FP1-30250B-21_11FP1-30250B-12_11FP1_30250B-04]
REAR USB
BC200
0.1U/6/Y/25V/X
Q72
2N7002/S
GAMEVCC
+12V
R700
1K/6
160MILS
5VUSB
BC201
0.1U/6/Y/25V/X
F2
FRONT USB
BC202
0.1U/6/Y/25V
RING IN
D21
BAT54C/S
NRIA-
NRIB-
R335
75K/6
R336
8.2K/6
EC36
22U/D/16V/47/X
Q25
MMBT2222A/S
S0T23
-RI
60mil
U64
U65
U66
U67
VOUT
GND
VIN
CE
PWROK1
9701/SOT23-5/X
BC583
0.1U/4/Y/16V/X
BC584
0.1U/4/Y/16V/X
BC585
0.1U/4/Y/16V/X
BC586
0.1U/4/Y/16V/X
VCC
03/29 LE POWER issue
PLACE BESIDE F_USB1
PLACE BESIDE F_USB2
PLACE BESIDE R_USB
PLACE BESIDE USB_LAN
FOR CH1
GIGABYTE
Title
FRONT/REAR USB CONNECTOR/IDE
Size
Custom
Document Number
GA-8I915ME-GL
Rev
1.02
Date: Monday, May 02, 2005
Sheet 29 of 36

Filter Cap design:

	Pin-29	Pin-30	Pin-31	Pin-34
ALC655 Rev D	1000pf	1000pf	1uf	Front-MIC2
ALC655 Rev C	1000pf	1000pf	1uf	X
ALC658	X	X	JD4	X
ALC650	1000pf	1000pf	1uf	1uf
ALC850	1000pf	1000pf	JD4	Front-MIC2

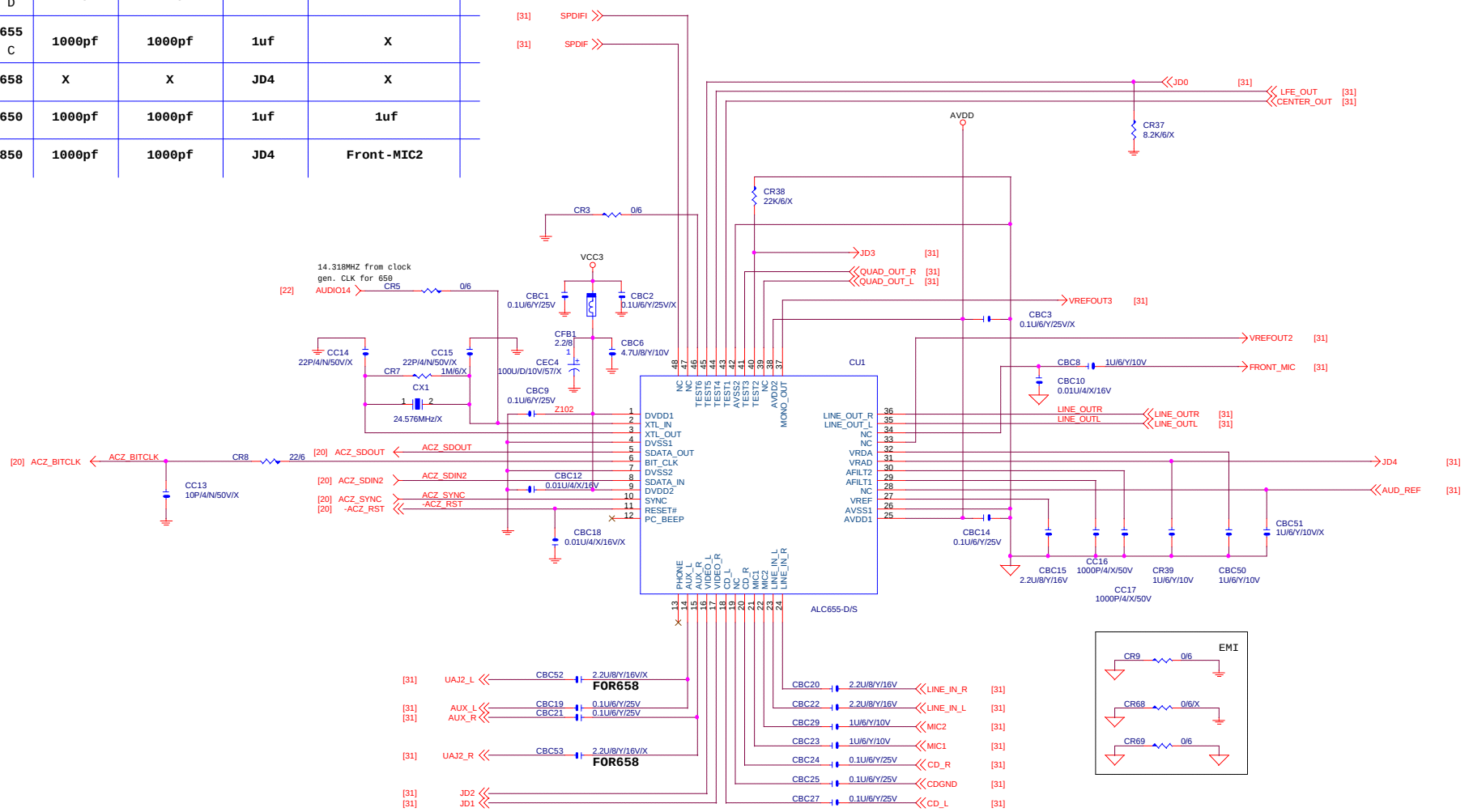

Arrangement of Jack detection Pin:

	Pin-45(JD0)	Pin-17(JD1)	Pin-16(JD2)	Pin-40(JD3)	Pin-31(JD4)	Pin-13(JD5)
ALC655	for MIC-IN	for FRONT-OUT	for LINE-IN			
ALC658	for MIC-IN	for UAJ1	for UAJ2	for FRONT-OUT Exernal pull high is needed	for LINE-IN Exernal pull high is needed	
ALC850	for MIC-IN	for Front Pannel OUT	for Front Pannel IN	for FRONT-OUT	for LINE-IN	for SurrBack Out

GIGABYTE			
Title	ALC655/658/850		
Size Custom	Document Number GA-8I915ME-GL		Rev 1.02
Date: Monday, May 02, 2005	Sheet 30 of 36		

LINE OUT

JDO,JD2,GPIO0 為偵測DEVICE INPUT 時由LOW
TO HIGH Edge trigger(pop manual)

LINE OUT SENSING
R>4K OHM=>POWER SPEAKER
4K OHM>R>400 OHM=>MICROPHONE
R<400 OHM=>HEADPHONE

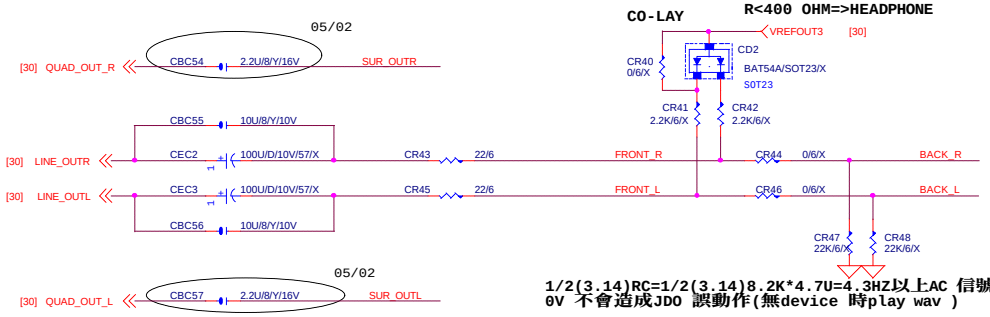

1/2(3.14)RC=1/2(3.14)8.2K*4.7U=4.3HZ以上AC 信號全部衰減 TO
0V 不會造成JDO 誤動作(無device 時play wav)

SUR_CEN

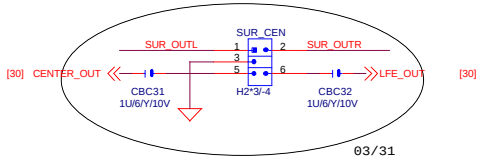

LINE IN SENSING(當OUTPUT)
R>4K OHM=>POWER SPEAKER
4K OHM>R>400 OHM=>MICROPHONE
R<400 OHM=>HEADPHONE

LINE IN SENSING(當INPUT)
swing of input signal>-40dbv(10mv)===>line in device active
swing of input signal<-40dbv(10mv)===>unknown line in device

LINE-IN

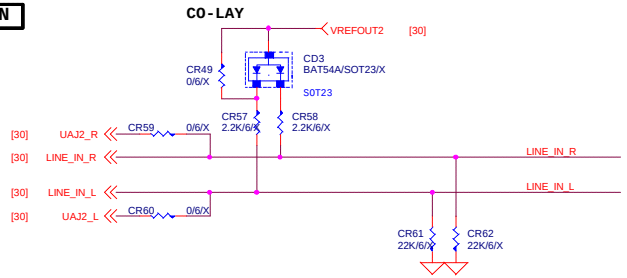

AC97 JACK

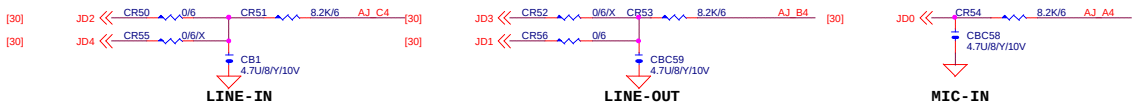

MIC

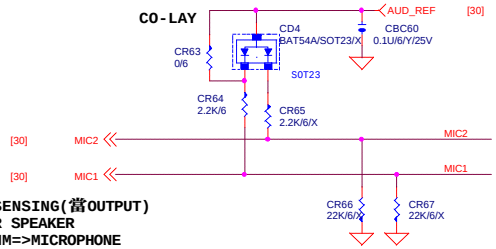

MICROPHONE IN SENSING(當OUTPUT)
R>4K OHM=>POWER SPEAKER
4K OHM>R>400 OHM=>MICROPHONE
R<400 OHM=>HEADPHONE

MICROPHONE IN SENSING(當INPUT)(利用vref 偏壓 與CR43,CR32 並聯求出阻抗)
7.1k ohm>R>2.3k ohm===>microphone in
R<2.3k ohm or R>7.1k ohm===>unknown device

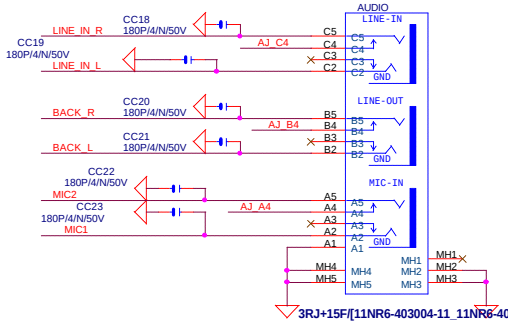

AUX IN

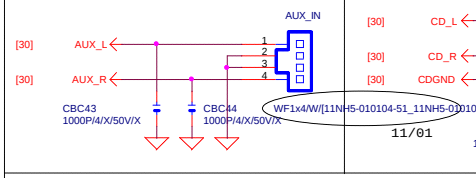

CD IN

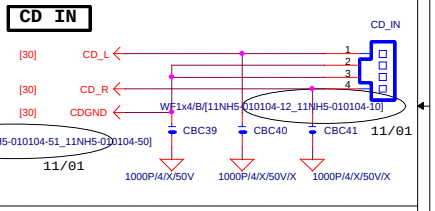

INTEL FRONT AUDIO

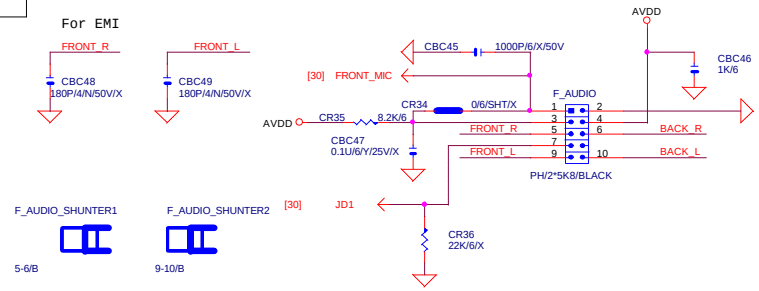

SPDIF

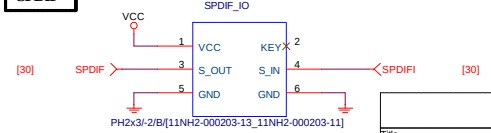

GIGABYTE

Title: AUDIO OUTPUT,GAME PORT

Size: Custom | Document Number: GA-8I915ME-GL | Rev: 1.02

Date: Monday, May 02, 2005 | Sheet 31 of 36

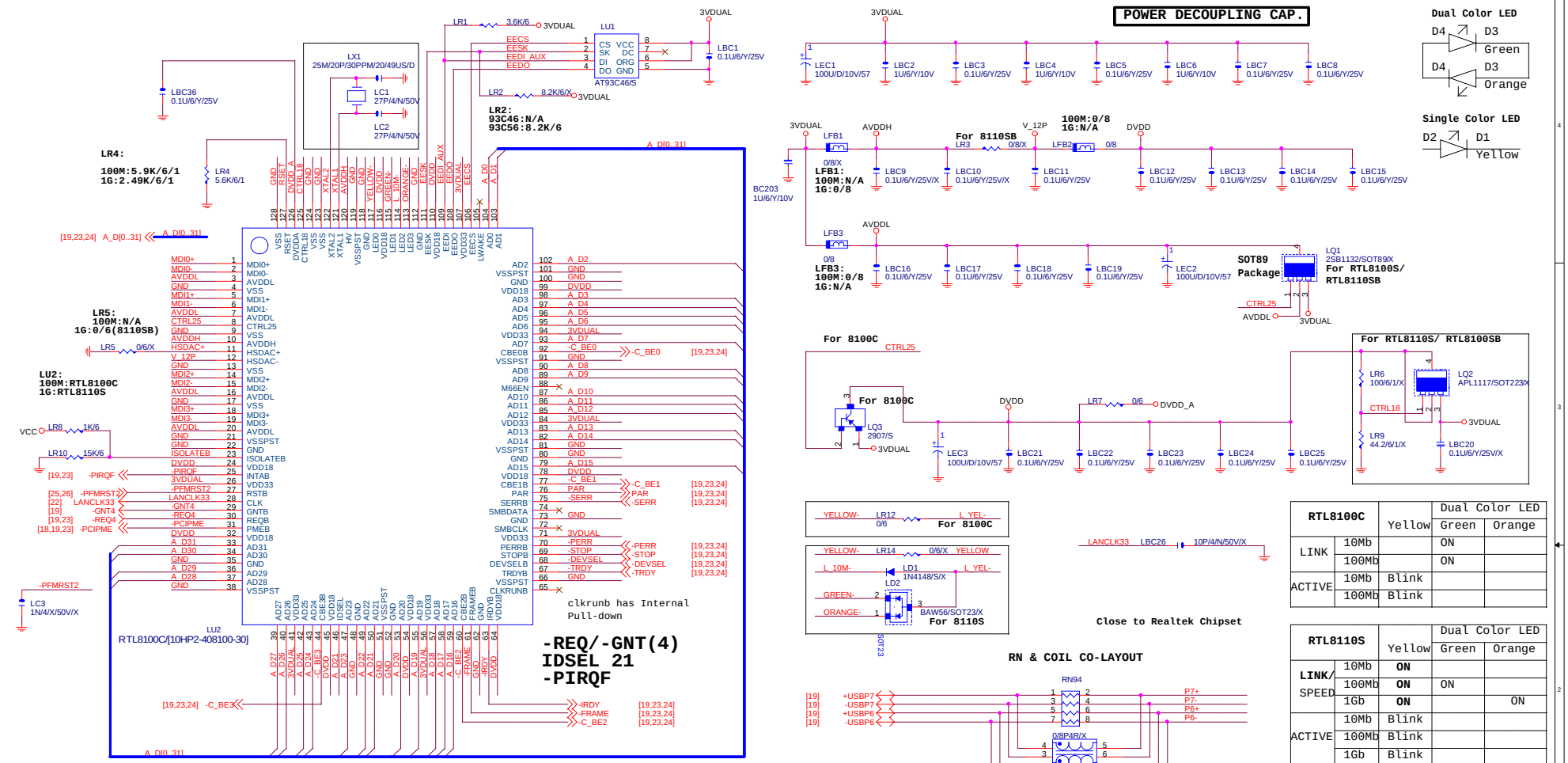

RTL8100C		Yellow	Dual Color LED Green	Dual Color LED Orange
LINK	10Mb		ON	
	100Mb		ON	
ACTIVE	10Mb	Blink		
	100Mb	Blink		

RTL8110S		Yellow	Dual Color LED Green	Dual Color LED Orange
LINK/ SPEED	10Mb	ON		
	100Mb	ON	ON	
	1Gb	ON		ON
ACTIVE	10Mb	Blink		
	100Mb	Blink		
	1Gb	Blink		

	10/100 8100C	Giga 8110S	Giga 8110SB
AVDDH	N/A	3.3V	3.3V
V_12P	2.5V	N/A	3.3V
AVDDL	3.3V	2.5V	2.5V
V_DAC	N/A	2.5V	2.5V
DVDD	2.5V	1.8V	1.3V
DVDD_A	2.5V	1.8V	1.3V

GIGABYTE

Title: LAN RTL8110S/8100C

Size: Custom | Document Number: GA-8I915ME-GL | Rev: 1.02

Date: Monday, May 02, 2005 | Sheet 32 of 36

ATX POWER CONNECTOR

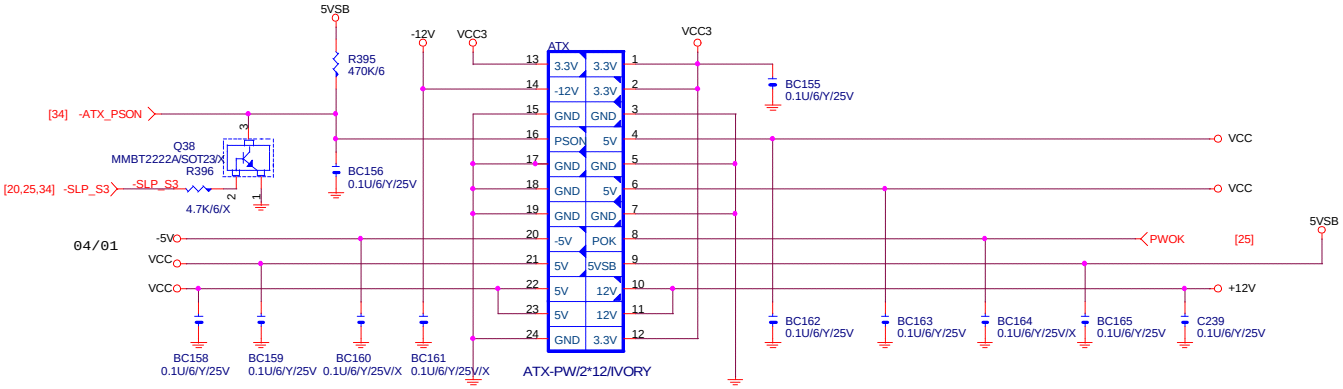

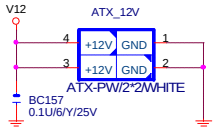

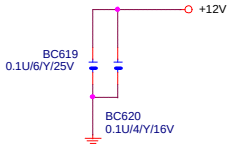

GIGABYTE

Title	ATX POWER CONNECTOR & TPM	
Size B	Document Number GA-8I915ME-GL	Rev 1.02
Date: Monday, May 02, 2005	Sheet 33 of 36	

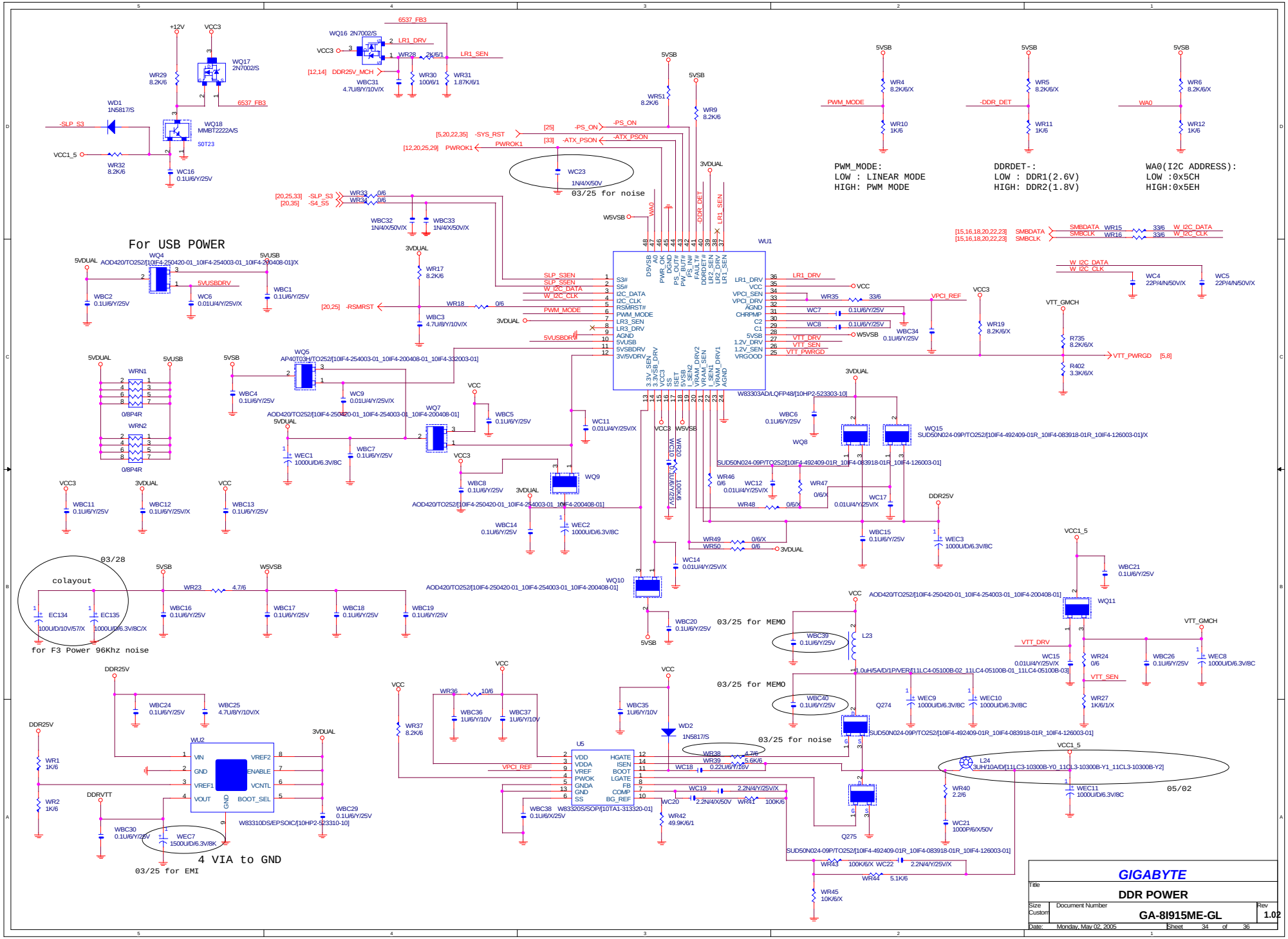
For USB POWER
PWM_MODE:
LOW : LINEAR MODE
HIGH: PWM MODE
DDRDET-:
LOW : DDR1(2.6V)
HIGH: DDR2(1.8V)
WA0(I2C ADDRESS):
LOW :0x5CH
HIGH:0x5EH
03/25 for noise
03/28
colayout
for F3 Power 96Khz noise
03/25 for MEMO
03/25 for MEMO
03/25 for noise
4 VIA to GND
03/25 for EMI
05/02
WU1
W83303AD/LQFP48/[10HP2-523303-10]
WU2
W83310DS/EPSOIC/[10HP2-523310-10]
U5
W83320S/SOP/[10TA1-313320-01]
GIGABYTE
Title
DDR POWER
Size
Custom
Document Number
GA-8I915ME-GL
Rev
1.02
Date: Monday, May 02, 2005
Sheet 34 of 36

INTEL FRONT PANEL

3 PIN POWER LED
LAYOUT PLACE CLOSE
TO F_PANEL

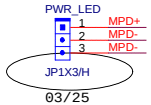

03/25

DEFAULT (N/A)
FOR S3 BLINKING

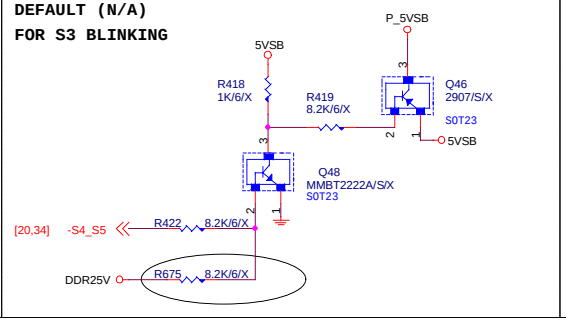

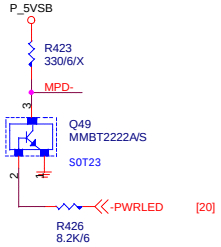

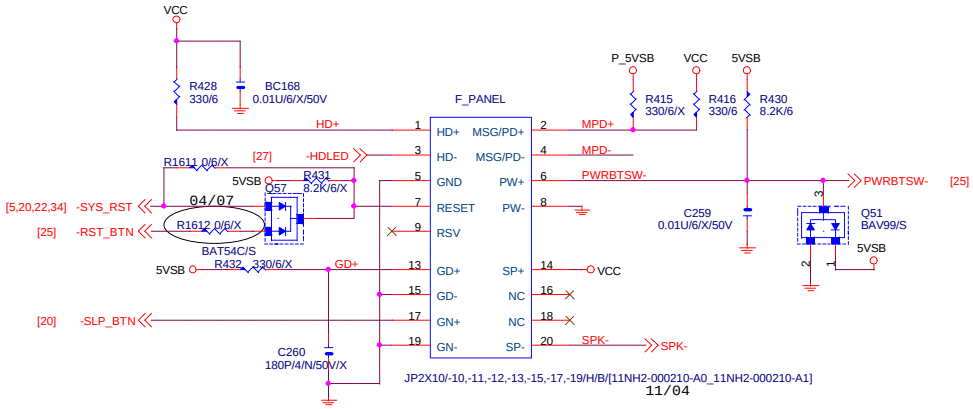

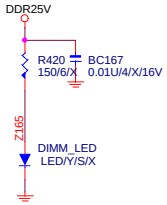

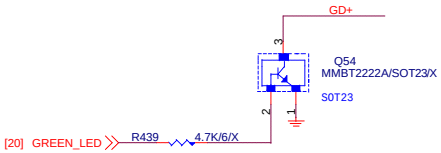

BUZZER

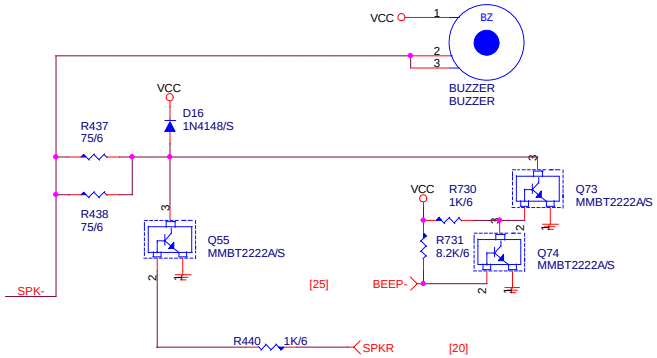

States for green LED NO1 GPO22 only S1 PROGRAMMING LOW

LED States	ACPI States	GPO28
ON	S1,S3	0
OFF	S0,S5	1

(GPO22 DEFAULT HIGH, main power)

States for a single-color power LED

LED States	ACPI States	GPO25	GPO27	GPO24
OFF	S1,S3,S5	1	1	N01
Steady Green	S0	1	1	1
Blinking Green	S0(message waiting)	1	B	1

LED States	ACPI States	GPO25	GPO27	GPO22
OFF	S5	1	1	X
Steady Green	S0	1	1	1
Blinking Green	S0(message waiting)	1	B	1
Steady Yellow	S1,S3	1	0	N01
Blinking Yellow	S1,S3(message waiting)	1	B	N01

GIGABYTE

Title: FRONT PANEL

Size: Custom | Document Number: GA-8I915ME-GL | Rev: 1.02

Date: Monday, May 02, 2005 | Sheet 35 of 36

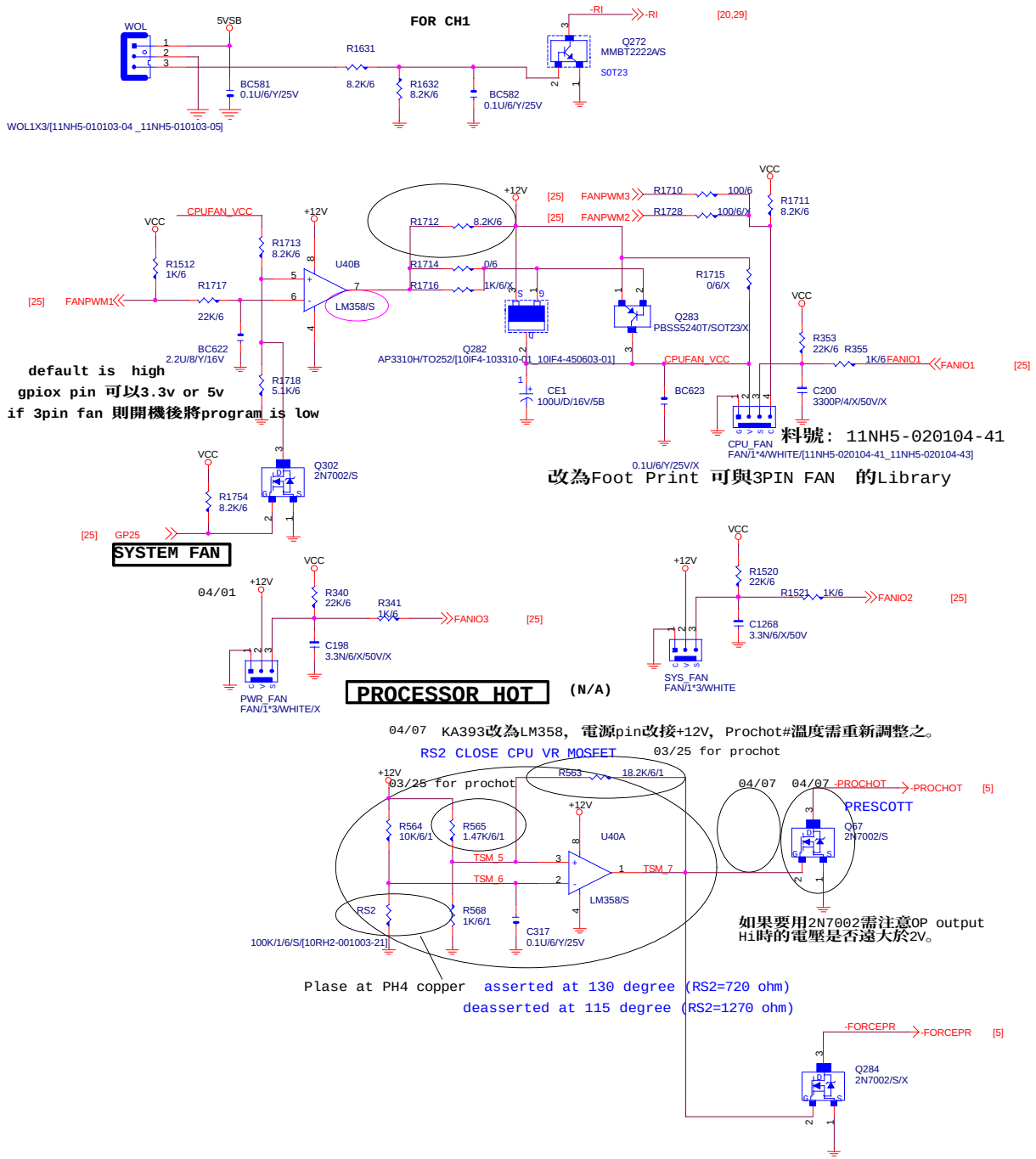

GIGABYTE	
Title	TSB43AB23A 1394
Size: Custom	Document Number: GA-8I915ME-GL
Rev	1.02
Date: Monday, May 02, 2005	Sheet 36 of 36