Model Name: 8I945G

Revision 1.1

SHEET	TITLE
01	COVER SHEET
02	BLOCK DIAGRAM
03	BOM & PCB MODIFY HISTORY
04	P4_LGA775_A
05	P4_LGA775_B
06	P4_LGA775_C
07	P4_LGA775_D
08	GMCH-LAKEPORT_HOST
09	GMCH-LAKEPORT_DDRII
10	GMCH-LAKEPORT_PCI E, DMI
11	GMCH-LAKEPORT_INT VGA
12	GMCH-LAKEPORT_GND
13	GMCH-LAKEPORT_PWR
14	DDRII CHANNEL A 1,2
15	DDRII CHANNEL B 1,2
16	DDRII TERMINATION
17	PCI EXPRESS*16 SLOT
18	ICH7 PCI, USB, DMI, LAN
19	ICH7 IDE, GPIO, SATA, CTRL
20	ICH7 VCC, GND
21	ICS954148AF CLOCK.
22	ATX,ATX_12V CONNECT,DUAL BIOS
23	PCI EXPRESS*1 SLOT 1,2
24	PCI SLOT 1,2,3
25	H/W MONITOR,FAN
26	IDE
27	KB_PS2,S.P.R

SHEET	TITLE
28	FRONT PANEL
29	FRONT USB,REAL USB CONNECT
30	PROCESSOR HOT
31	AZALIA CODEC ALC880
32	AUDIO JACK 1
33	AUDIO JACK 2
34	TI1394B
35	TI1394B
36	MARVELL 88E8053 LAN
37	ITE 8712GB
38	COM_LPT
39	VCORE PWM
40	DISCRETE POWER
41	ITE8212 RAID
42	ITE8212 RAID
43	GPIO DEFINE
44	GPIO DEFINE

Intel Confidential

Title	Cover Sheet	
Size: Custom	Document Number: 8I945G	Rev: 1.1
Date: Tuesday, November 01, 2005	Sheet 1 of 44	

BLOCK DIAGRAM

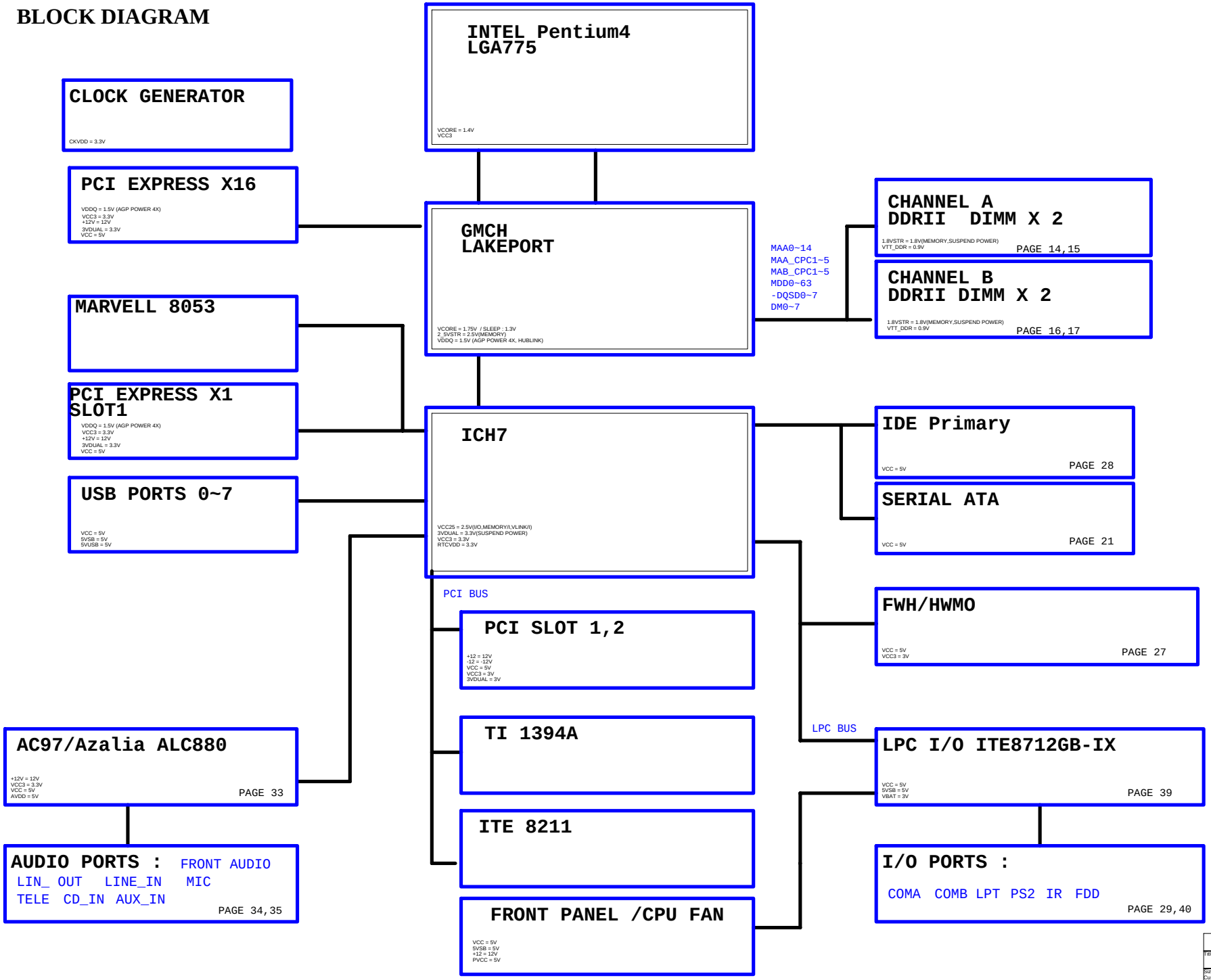

Intel Confidential

Title	BOM & PCB MODIFY HISTORY		
Size Custom	Document Number 8I945G		Rev 1.1
Date: Tuesday, November 01, 2005	Sheet 2 of 44		

Model Name: 8I945G

Version: 1.1

Component value change history

Data	Change Item	Reason
0.2	release 02	
1.0	release 02	
	add bc24 22u	
	ddr ratio 線路圖 修改斷線且要上	
	DDR18V 線路修改	
	F2 改料號	
	INFO_LINK REMOVE	
	N/B,S/B 改料號	
	USB AGND/GND 加電阻	
	加SPDIFI	
1.0B	R1619 1K/6 REMOVE	
1.0C	REMOVE PCIE_12V(11NH4-010004-01)	
	CU1 10HP5-366882-10 CHANGE 10HP5-366882-10R ALC882	
	L1,L2,L18 10LI2-12100A-03 CHANGE 10LI2-12100A-13	
1.0D	1.NB_HS 移到DIP 階	
	2.Add X1=32.768 KHz/[11XC5-532768-00]	
	3.RU1 from VT6410 change to IT8212	
1.0E	1.PCB change to 1.0 2	
	2.VCC3 add 1u/6 *3 for DDRII SPD issue	
1.0L	1.RF_ID change to white 11NH2-000203-41	
	2.Add PWR_LED connect	
1.0M	1.C190 add 0.1u/6	
1.1A	1.FWH change to SPI function	
	2.PCB change to 1.1	

Circuit or PCB layout change for next version

DATE	Change Item	Reason
2005/11/02	1.U9 SPI Footprint change to IC8SO-DUAL	PCB version:1.1

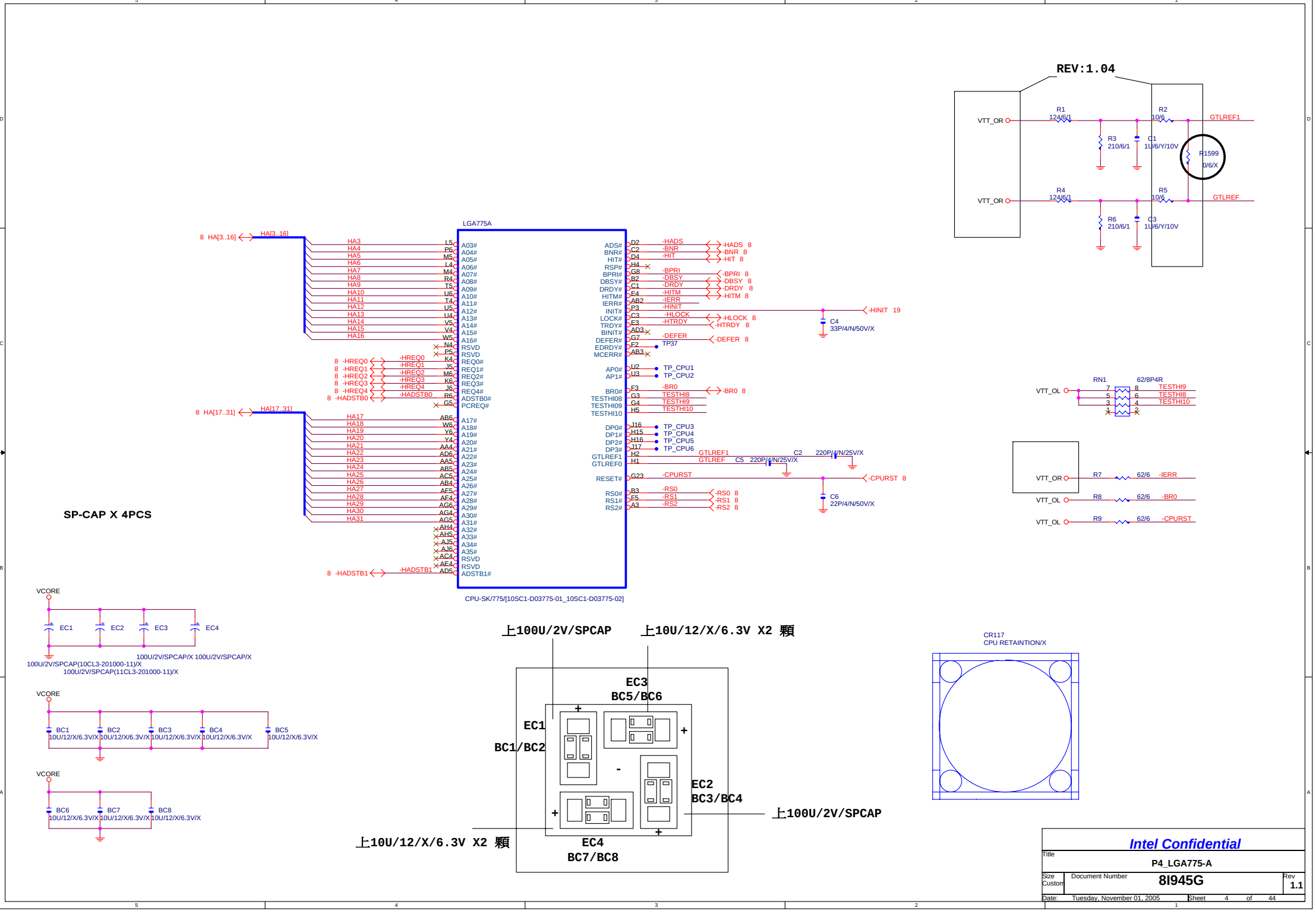
REV:1.04
VTT_OR
R1 124/6/1
R2 10/6
GTLREF1
R3 210/6/1
C1 1U/6/Y/10V
R1599 0/6/X
R4 124/6/1
R5 10/6
GTLREF
R6 210/6/1
C3 1U/6/Y/10V
LGA775A
8 HA[3..16]
HA[3..16]
HA[17..31]
8 HA[17..31]
8 -HREQ0
8 -HREQ1
8 -HREQ2
8 -HREQ3
8 -HREQ4
8 -HADSTB0
8 -HADSTB1
-HADSTB1
ADS# BNR# HIT# RSP# BPRI# DBSY# DRDY# HITM# IERR# INIT# LOCK# TRDY# BINIT# DEFER# EDRDY# MCERR#
-HADS 8
-BNR 8
-HIT 8
-BPRI 8
-DBSY 8
-DRDY 8
-HITM 8
-IERR
-HINIT
-HINIT 19
-HLOCK 8
-HTRDY 8
-DEFER
-DEFER 8
TP37
C4 33P/4/N/50V/X
AP0# AP1#
TP_CPU1
TP_CPU2
BR0# TESTHI08 TESTHI09 TESTHI10
-BR0
-BR0 8
TESTHI8
TESTHI9
TESTHI10
DP0# DP1# DP2# DP3#
TP_CPU3
TP_CPU4
TP_CPU5
TP_CPU6
GTLREF1 GTLREF0
GTLREF
C5 220P/4/N/25V/X
C2 220P/4/N/25V/X
RESET#
-CPURST
-CPURST 8
C6 22P/4/N/50V/X
RS0# RS1# RS2#
-RS0
-RS1
-RS2
-RS0 8
-RS1 8
-RS2 8
CPU-SK/775/[10SC1-D03775-01_10SC1-D03775-02]
SP-CAP X 4PCS
VTT_OL
RN1 62/8P4R
TESTHI9
TESTHI8
TESTHI10
VTT_OR
R7 62/6 -IERR
R8 62/6 -BR0
R9 62/6 -CPURST
VCORE
EC1 EC2 EC3 EC4
100U/2V/SPCAP/X 100U/2V/SPCAP/X
100U/2V/SPCAP(10CL3-201000-11)/X
100U/2V/SPCAP(11CL3-201000-11)/X
BC1 10U/12/X/6.3V/X
BC2 10U/12/X/6.3V/X
BC3 10U/12/X/6.3V/X
BC4 10U/12/X/6.3V/X
BC5 10U/12/X/6.3V/X
BC6 10U/12/X/6.3V/X
BC7 10U/12/X/6.3V/X
BC8 10U/12/X/6.3V/X
上100U/2V/SPCAP
上10U/12/X/6.3V X2 顆
EC3
BC5/BC6
EC1
BC1/BC2
EC2
BC3/BC4
上100U/2V/SPCAP
上10U/12/X/6.3V X2 顆
EC4
BC7/BC8
CR117
CPU RETAINTION/X
Intel Confidential
Title
P4_LGA775-A
Size Custom
Document Number
8I945G
Rev 1.1
Date: Tuesday, November 01, 2005
Sheet 4 of 44

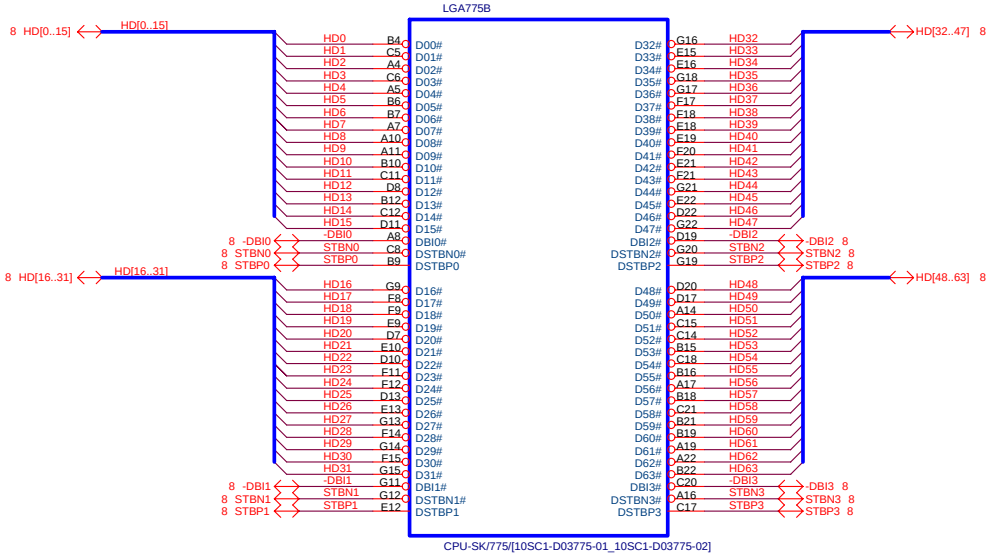

Intel Confidential

Title	P4_LGA775-C		
Size Custom	Document Number 8I945G		Rev 1.1
Date: Tuesday, November 01, 2005	Sheet 5 of 44		

Note:
VCCA & VCOREPLL define doesn't same as old P4 design kit

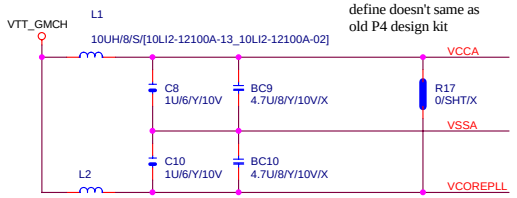

Trace width doesn't less than 12 Mil

As close as possible to CPU socket

945 Design Guide rev1.5 spec.
VCCA=120~220mA
公板爲125mA

10LI2-12100A-13=INDUCTOR 10uH 320mA TAI-TECH
10LI2-12100A-02=INDUCTOR 10uH 155mA TAIYO
10LI2-12100A-03=INDUCTOR 10uH 300mA TAI-TECH(會破裂)
10LI2-12100A-01=INDUCTOR 10uH 120mA TDK

限用兩種

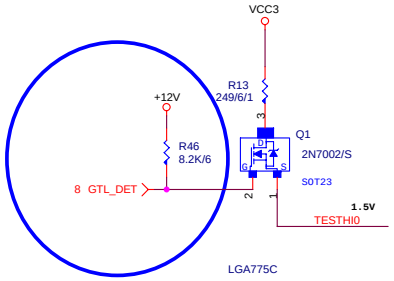

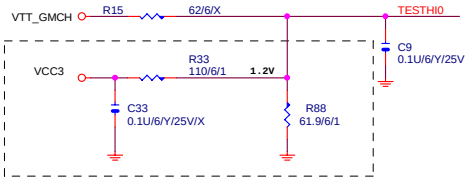

Place outside of CPU socket

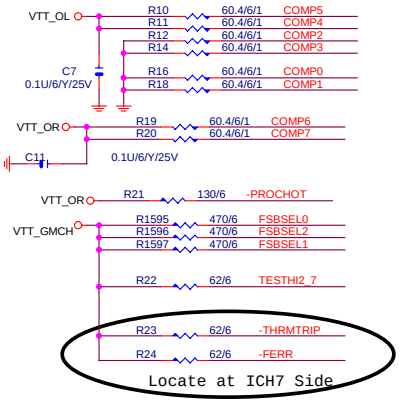

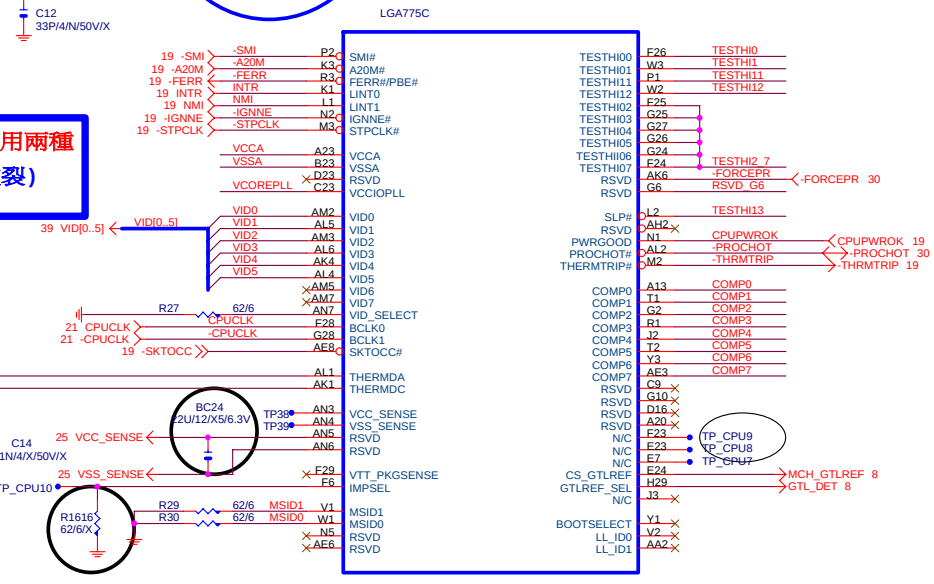

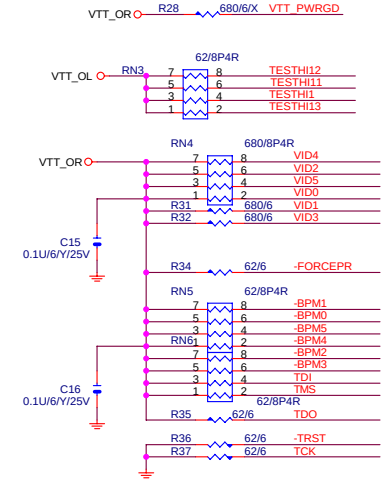

CPU

FSA	FSB	NA		
FSBSEL0	FSBSEL1	FSBSEL2	Clock	
1	0	1	100MHz	
1	0	0	133MHz	3/4
1	1	0	166MHz	# POWER ON
0	1	0	200MHz	2.0/2.66/3.33
0	0	0	266MHz	1.5/2.0/2.5

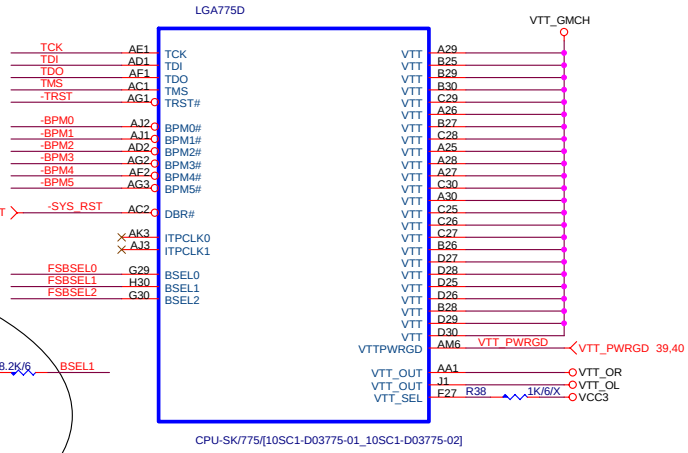

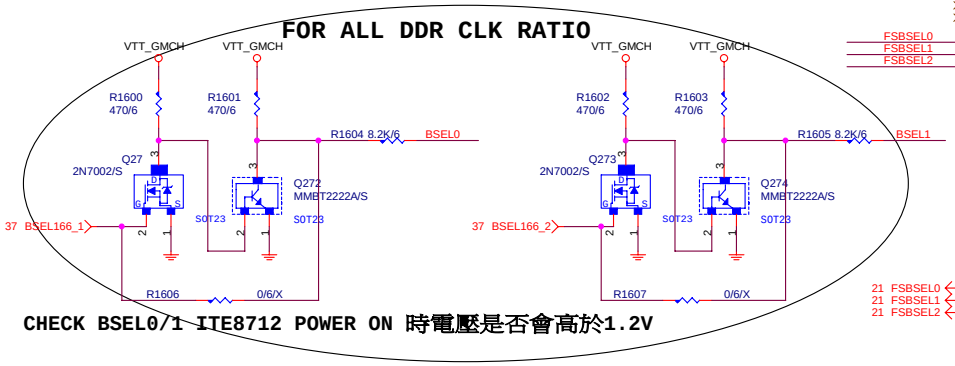

CHECK BSEL0/1 ITE8712 POWER ON 時電壓是否會高於1.2V

21 FSBSEL0 — FSBSEL0 R39 8.2K/6/X BSEL0 — BSEL0 11
21 FSBSEL1 — FSBSEL1 R40 8.2K/6/X BSEL1 — BSEL1 11
21 FSBSEL2 — FSBSEL2 R41 8.2K/6 BSEL2 — BSEL2 11

Intel Confidential

Title	P4_LGA775-B	
Size Custom	Document Number 8I945G	Rev 1.1
Date: Tuesday, November 01, 2005	Sheet 6 of 44	

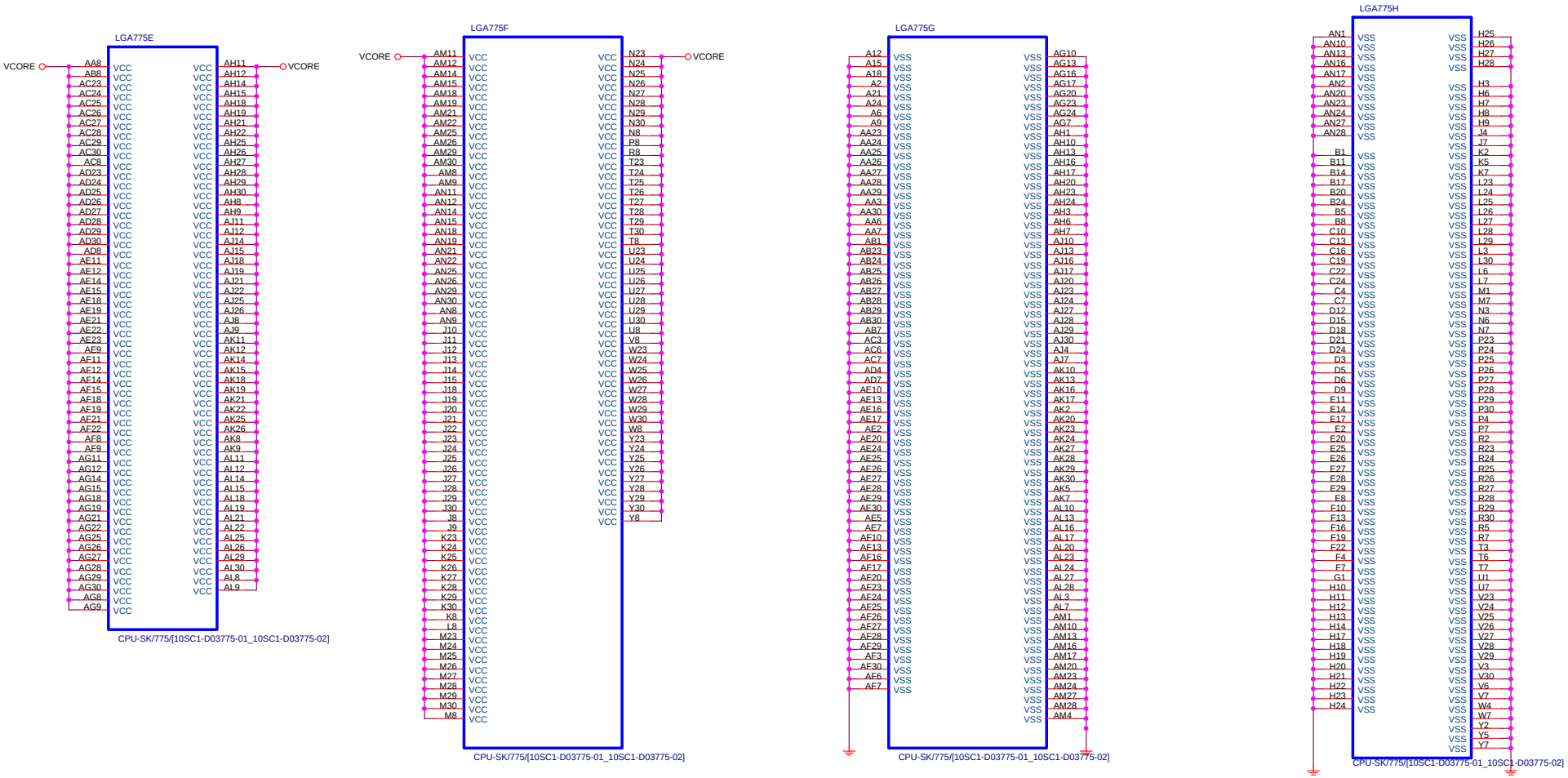

Intel Confidential

Title	P4_LGA775-D		
Size: Custom	Document Number: 8I945G		Rev: 1.1
Date: Tuesday, November 01, 2005	Sheet 7 of 44		

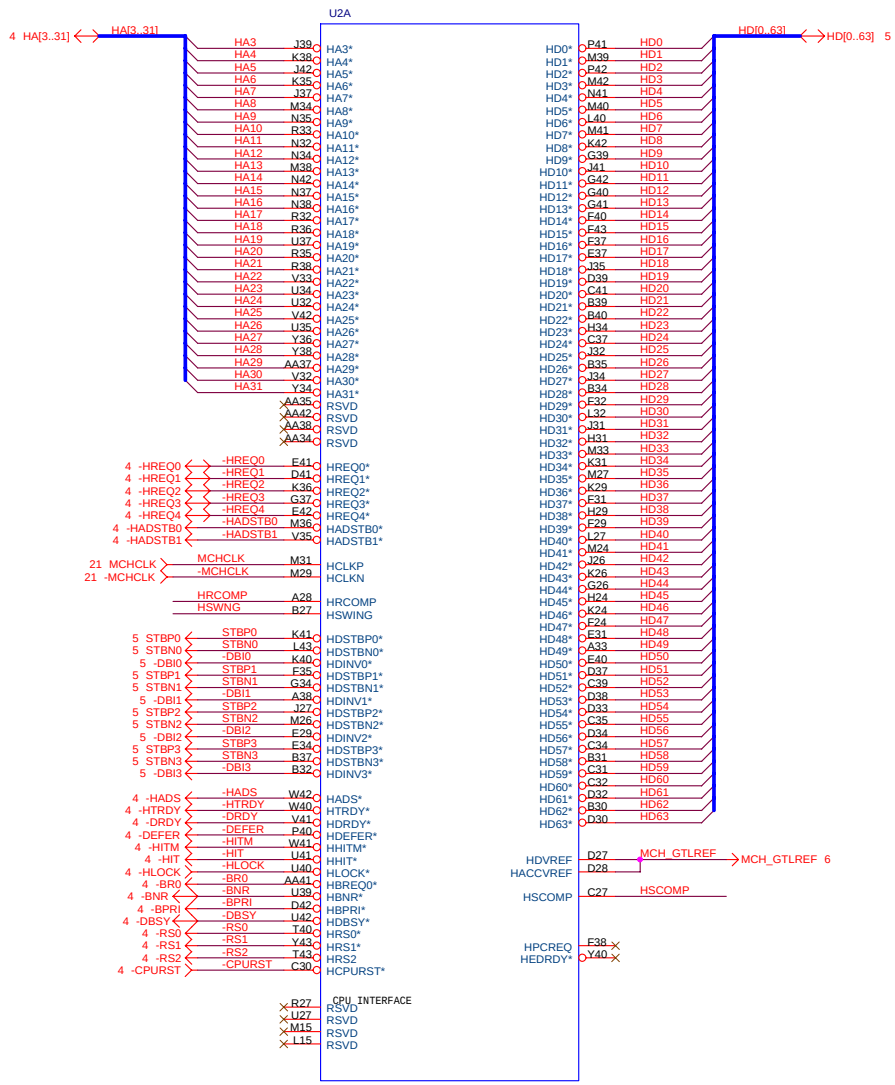

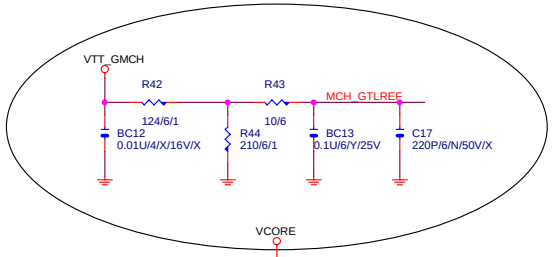

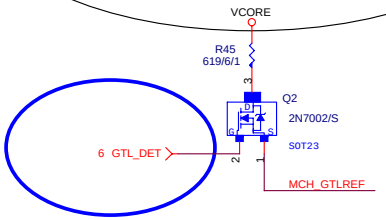

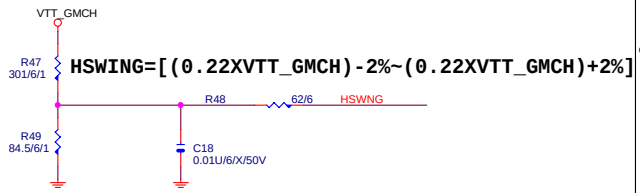

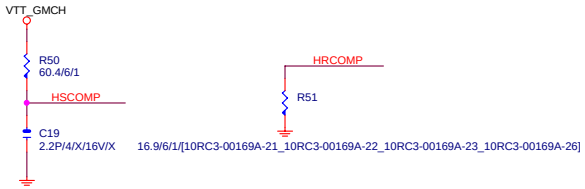

Intel Confidential

Title	GMCH-HOST
Size Custom	Document Number 8I945G
Rev	1.1
Date: Tuesday, November 01, 2005	Sheet 8 of 44

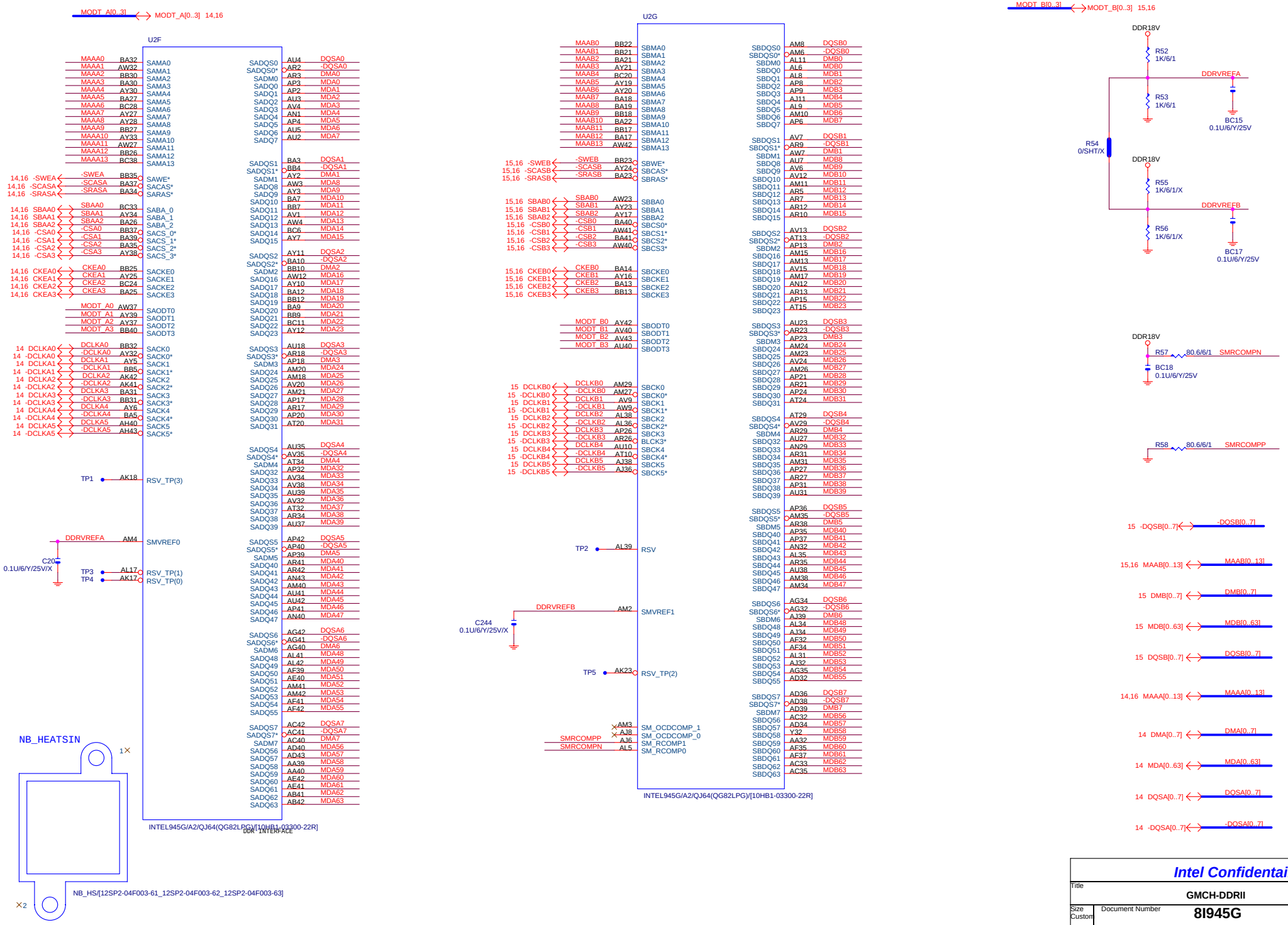

Intel Confidentail

Title	GMCH-DDRII		
Size Custom	Document Number 8I945G		Rev 1.1
Date: Tuesday, November 01, 2005	Sheet 9 of 44		

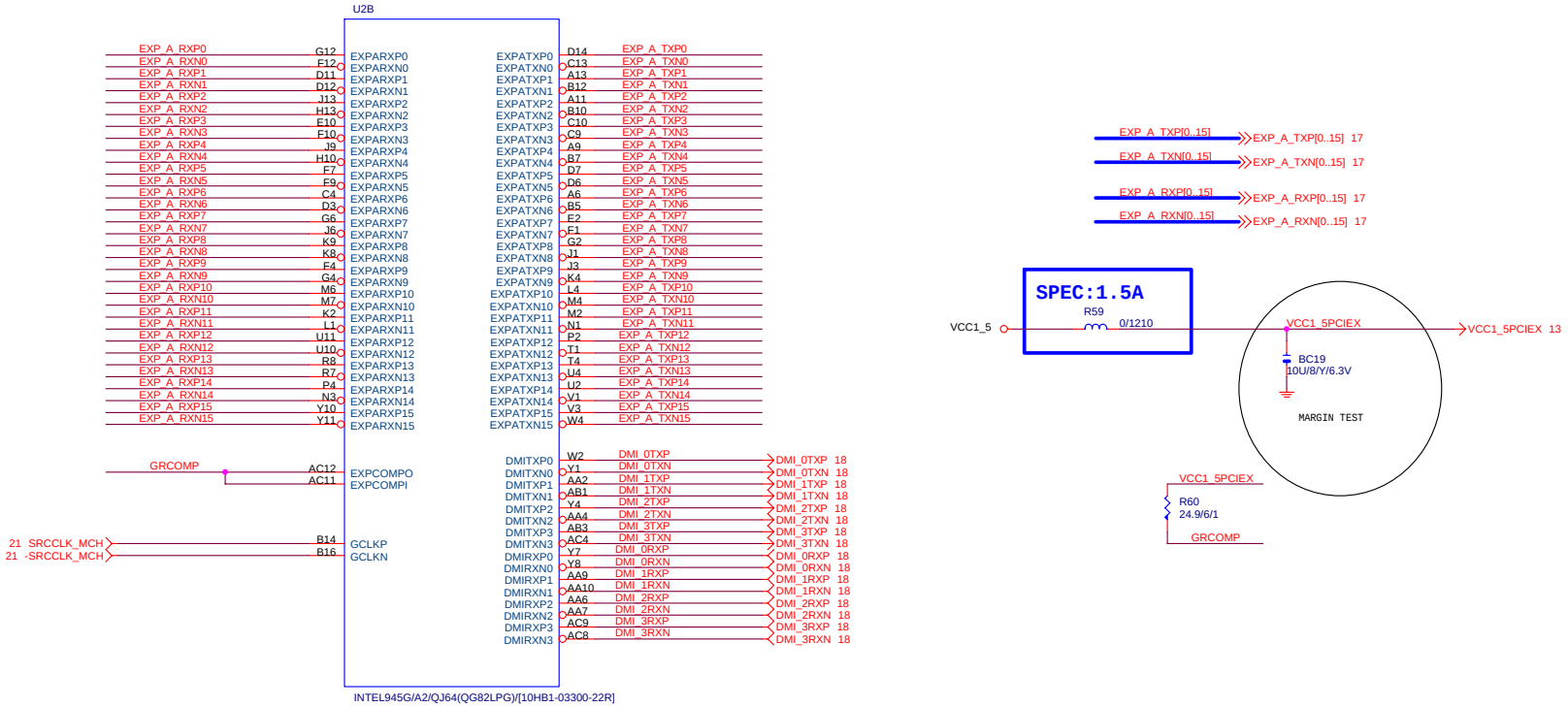

Intel Confidentail

Title	GMCH-PCI E & DMI		
Size Custom	Document Number 8I945G		Rev 1.1
Date: Tuesday, November 01, 2005	Sheet 10 of 44		

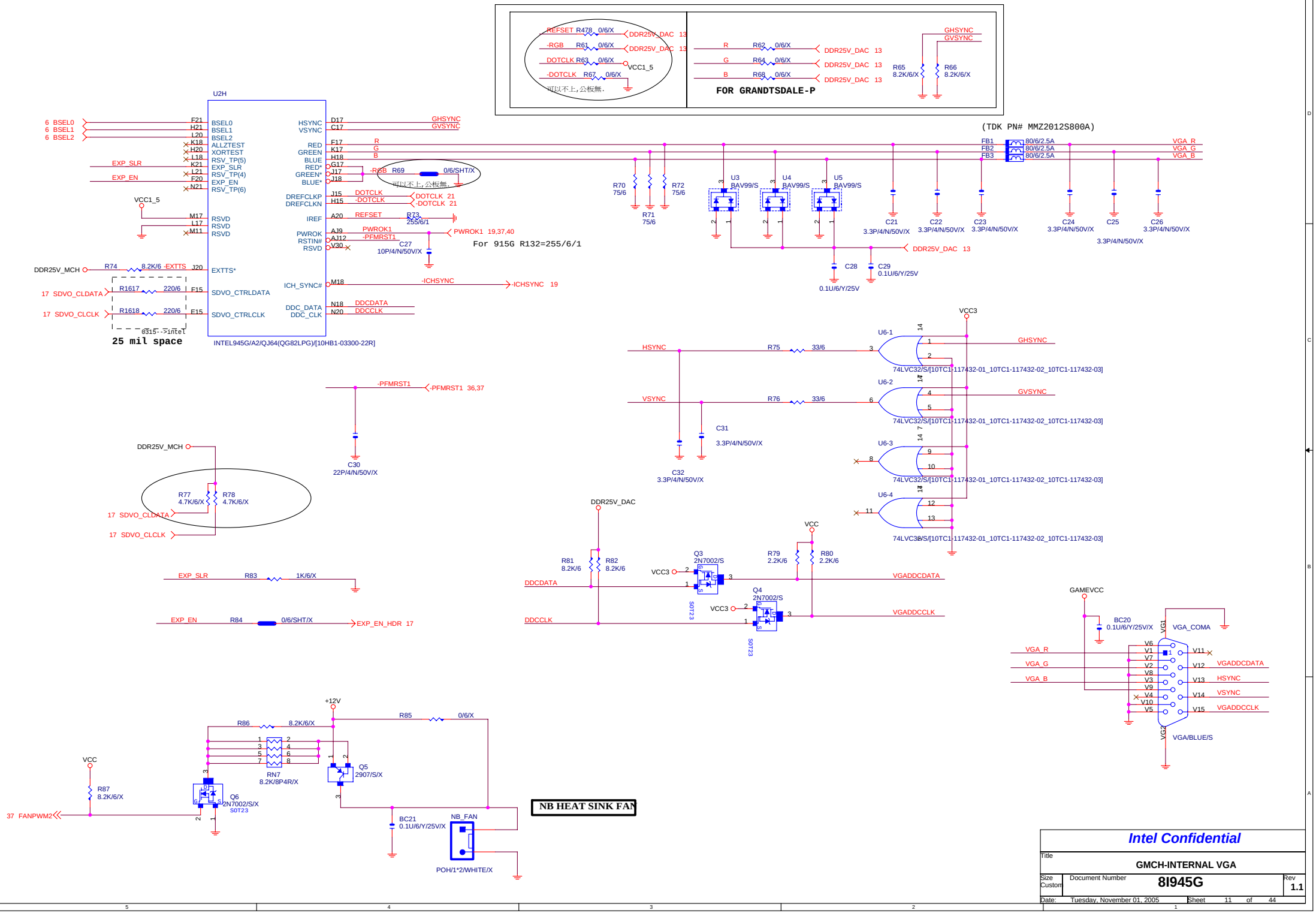
REFSET R478 0/6/X DDR25V_DAC 13
-RGB R61 0/6/X DDR25V_DAC 13
DOTCLK R63 0/6/X VCC1_5
-DOTCLK R67 0/6/X
可以不上,公板無.
R R62 0/6/X DDR25V_DAC 13
G R64 0/6/X DDR25V_DAC 13
B R66 0/6/X DDR25V_DAC 13
FOR GRANDTSDALE-P
GHSYNC
GVSYNC
R65 8.2K/6/X
R66 8.2K/6/X
U2H
6 BSEL0
6 BSEL1
6 BSEL2
EXP_SLR
EXP_EN
VCC1_5
DDR25V_MCH
R74 8.2K/6 -EXTTS
17 SDVO_CLDATA
R1617 220/6
17 SDVO_CLCLK
R1618 220/6
0315 intel
25 mil space
BSEL0
BSEL1
BSEL2
ALLZTEST
XORTEST
RSV_TP(5)
EXP_SLR
RSV_TP(4)
EXP_EN
RSV_TP(6)
RSVD
RSVD
RSVD
EXTTS*
SDVO_CTRLDATA
SDVO_CTRLCLK
HSYNC
VSYNC
RED
GREEN
BLUE
RED*
GREEN*
BLUE*
-RGB R69 0/6/SHT/X
可以不上,公板無.
DREFCLKP
DREFCLKN
DOTCLK 21
-DOTCLK 21
IREF
REFSET
R73 255/6/1
PWROK
RSTIN#
RSVD
PWROK1
-PFMRST1
PWROK1 19,37,40
C27 10P/4N/50V/X
For 915G R132=255/6/1
ICH_SYNC#
-ICHSYNC
-ICHSYNC 19
DDC_DATA
DDC_CLK
DDCDATA
DDCCLK
INTEL945G/A2/QJ64(QG82LPG)/[10HB1-03300-22R]
(TDK PN# MMZ2012S800A)
FB1 80/6/2.5A
FB2 80/6/2.5A
FB3 80/6/2.5A
VGA_R
VGA_G
VGA_B
R70 75/6
R71 75/6
R72 75/6
U3 BAV99/S
U4 BAV99/S
U5 BAV99/S
C21 3.3P/4/N/50V/X
C22 3.3P/4/N/50V/X
C23 3.3P/4/N/50V/X
C24 3.3P/4/N/50V/X
C25 3.3P/4/N/50V/X
C26 3.3P/4/N/50V/X
DDR25V_DAC 13
C28 0.1U/6/Y/25V
C29 0.1U/6/Y/25V
VCC3
HSYNC
R75 33/6
U6-1
GHSYNC
74LVC32/S/[10TC1-117432-01_10TC1-117432-02_10TC1-117432-03]
VSYNC
R76 33/6
U6-2
GVSYNC
C31 3.3P/4/N/50V/X
C32 3.3P/4/N/50V/X
U6-3
U6-4
-PFMRST1
-PFMRST1 36,37
C30 22P/4/N/50V/X
DDR25V_MCH
R77 4.7K/6/X
R78 4.7K/6/X
17 SDVO_CLDATA
17 SDVO_CLCLK
DDR25V_DAC
R81 8.2K/6
R82 8.2K/6
VCC3
Q3 2N7002/S
R79 2.2K/6
R80 2.2K/6
VCC
DDCDATA
VGADDCDATA
Q4 2N7002/S
DDCCLK
VGADDCCLK
SOT23
EXP_SLR
R83 1K/6/X
EXP_EN
R84 0/6/SHT/X
EXP_EN_HDR 17
GAMEVCC
BC20 0.1U/6/Y/25V/X
VGA_COMA
VGA_R
VGA_G
VGA_B
VGADDCDATA
HSYNC
VSYNC
VGADDCCLK
VGA/BLUE/S
+12V
R86 8.2K/6/X
R85 0/6/X
RN7 8.2K/8P4R/X
Q5 2907/S/X
VCC
R87 8.2K/6/X
Q6 2N7002/S/X
SOT23
37 FANPWM2
BC21 0.1U/6/Y/25V/X
NB_FAN
POH/1*2/WHITE/X
NB HEAT SINK FAN
Intel Confidential
Title
GMCH-INTERNAL VGA
Size Custom
Document Number
8I945G
Rev 1.1
Date: Tuesday, November 01, 2005
Sheet 11 of 44

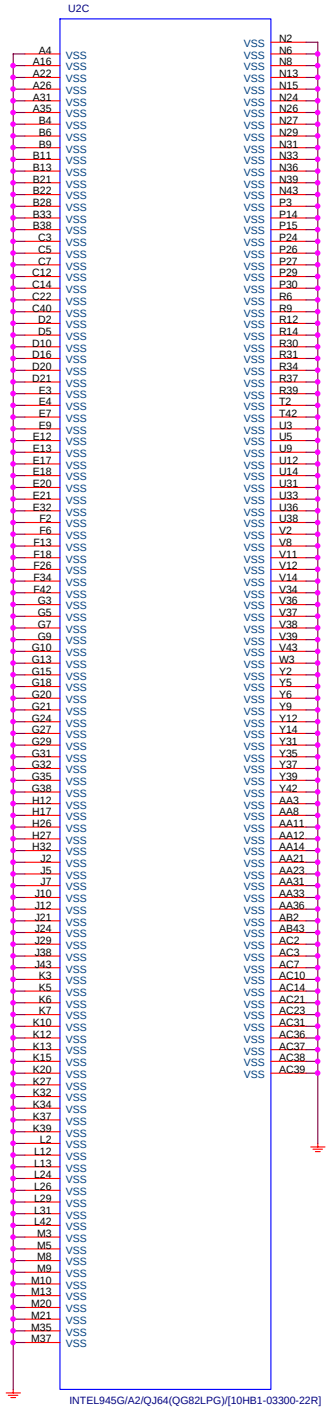

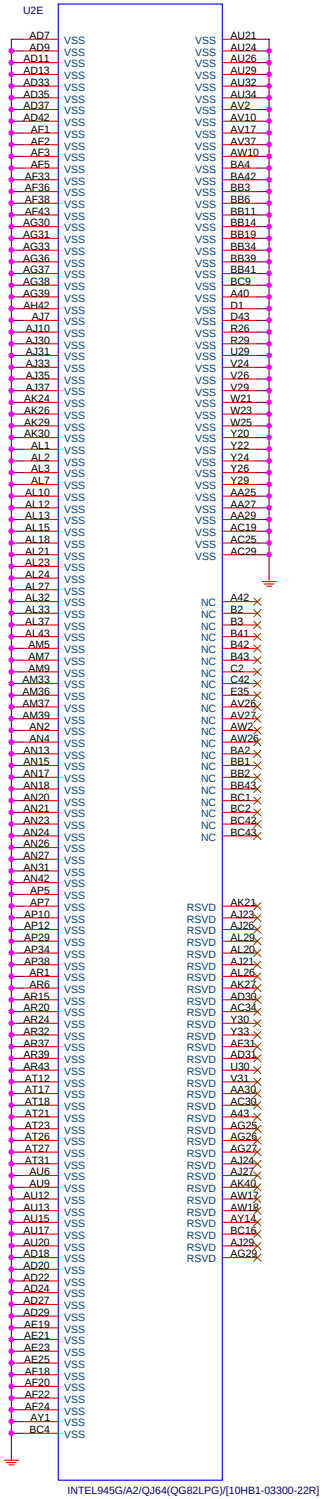

Intel Confidentail

Title	GMCH-GND		
Size Custom	Document Number 8I945G		Rev 1.1
Date: Tuesday, November 01, 2005	Sheet 12 of 44		

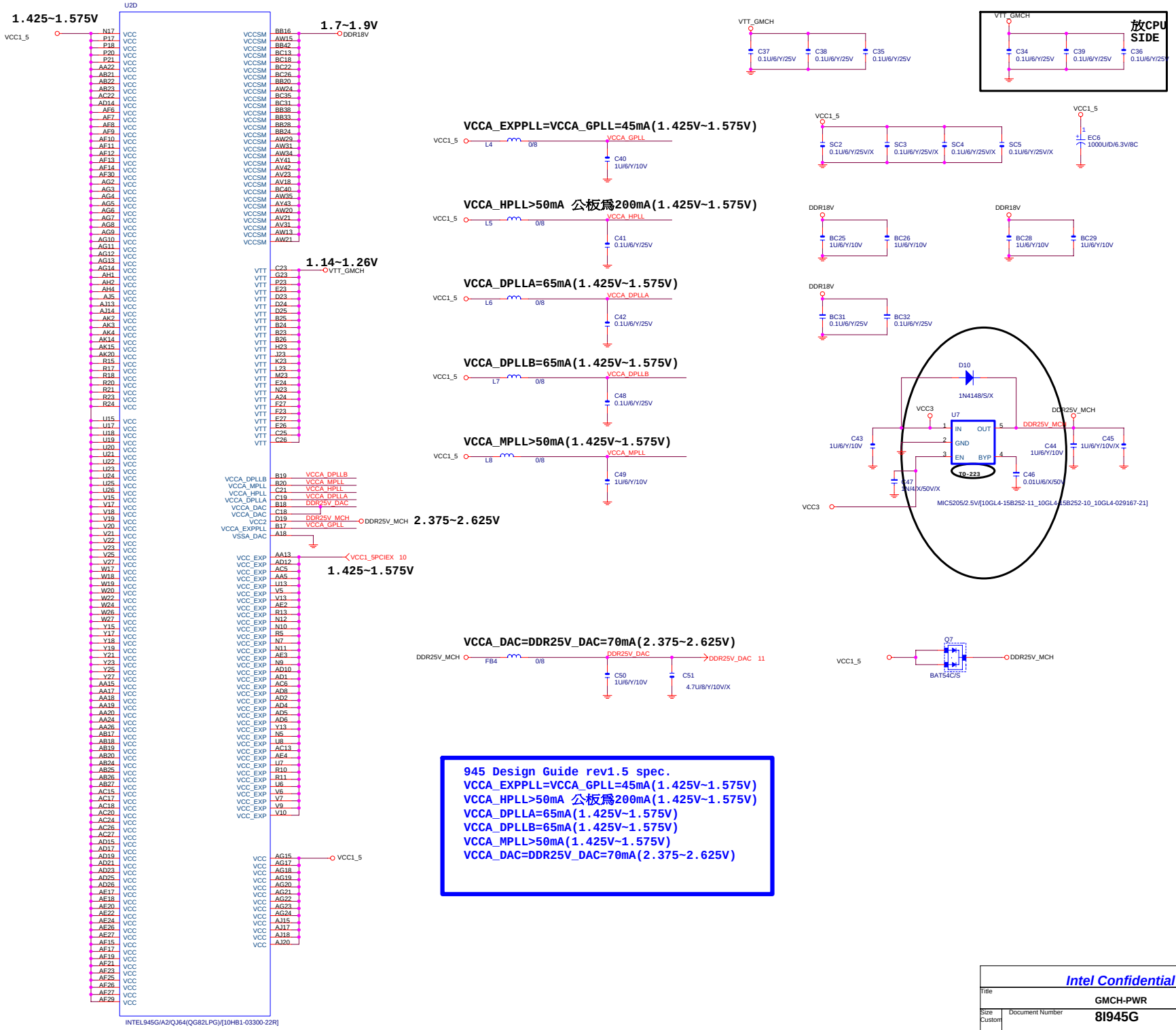

945 Design Guide rev1.5 spec.
VCCA_EXPPLL=VCCA_GPLL=45mA(1.425V~1.575V)
VCCA_HPLL>50mA 公板爲200mA(1.425V~1.575V)
VCCA_DPLLA=65mA(1.425V~1.575V)
VCCA_DPLLB=65mA(1.425V~1.575V)
VCCA_MPLL>50mA(1.425V~1.575V)
VCCA_DAC=DDR25V_DAC=70mA(2.375~2.625V)

Intel Confidential

Title	GMCH-PWR		
Size Custom	Document Number 8I945G		Rev 1.1
Date: Tuesday, November 01, 2005	Sheet 13 of 44		

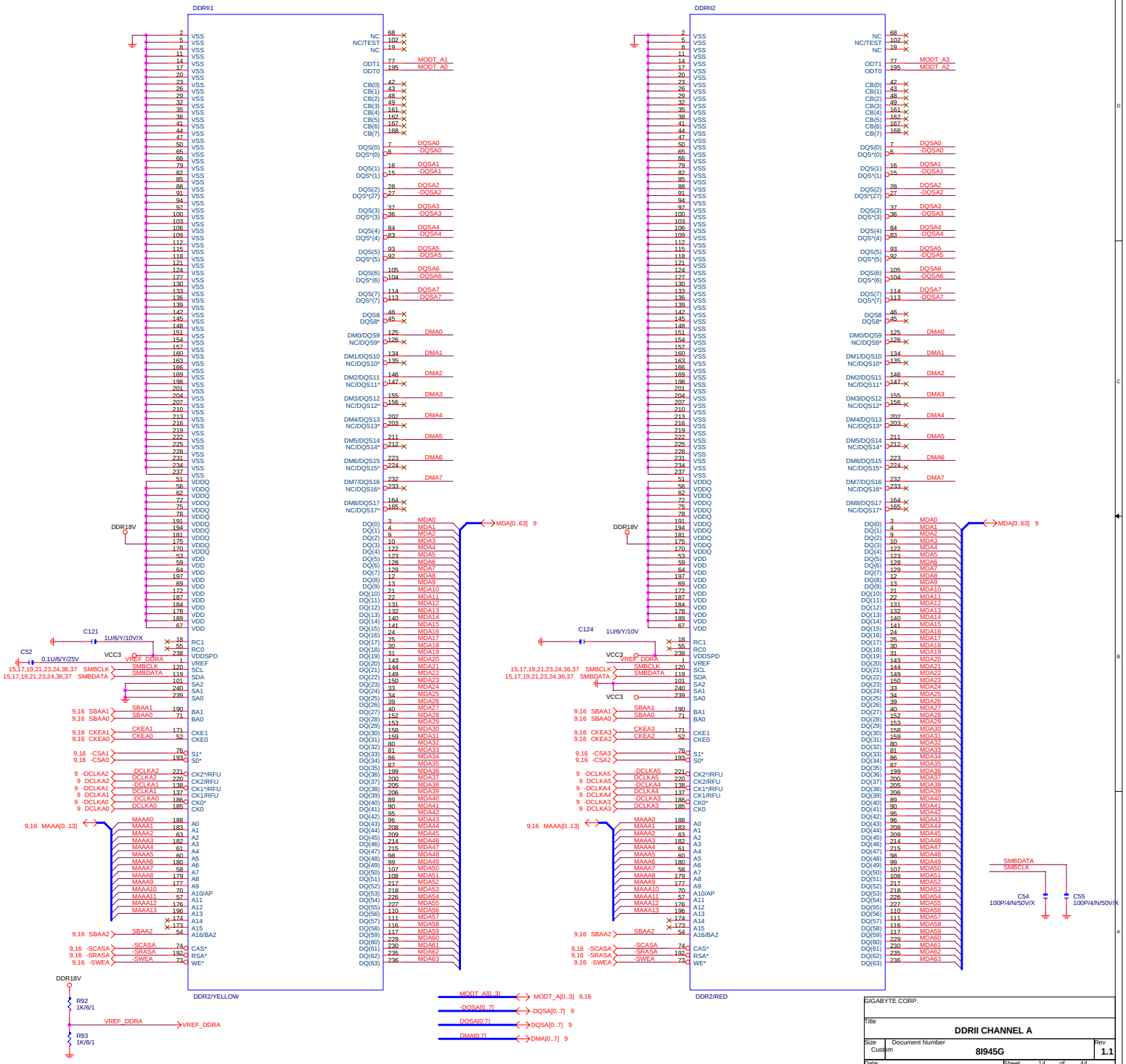

GIGABYTE CORP.

Title: **DDRII CHANNEL A**

Size	Document Number	Rev
Custom	8I945G	1.1

Date: Sheet 14 of 44

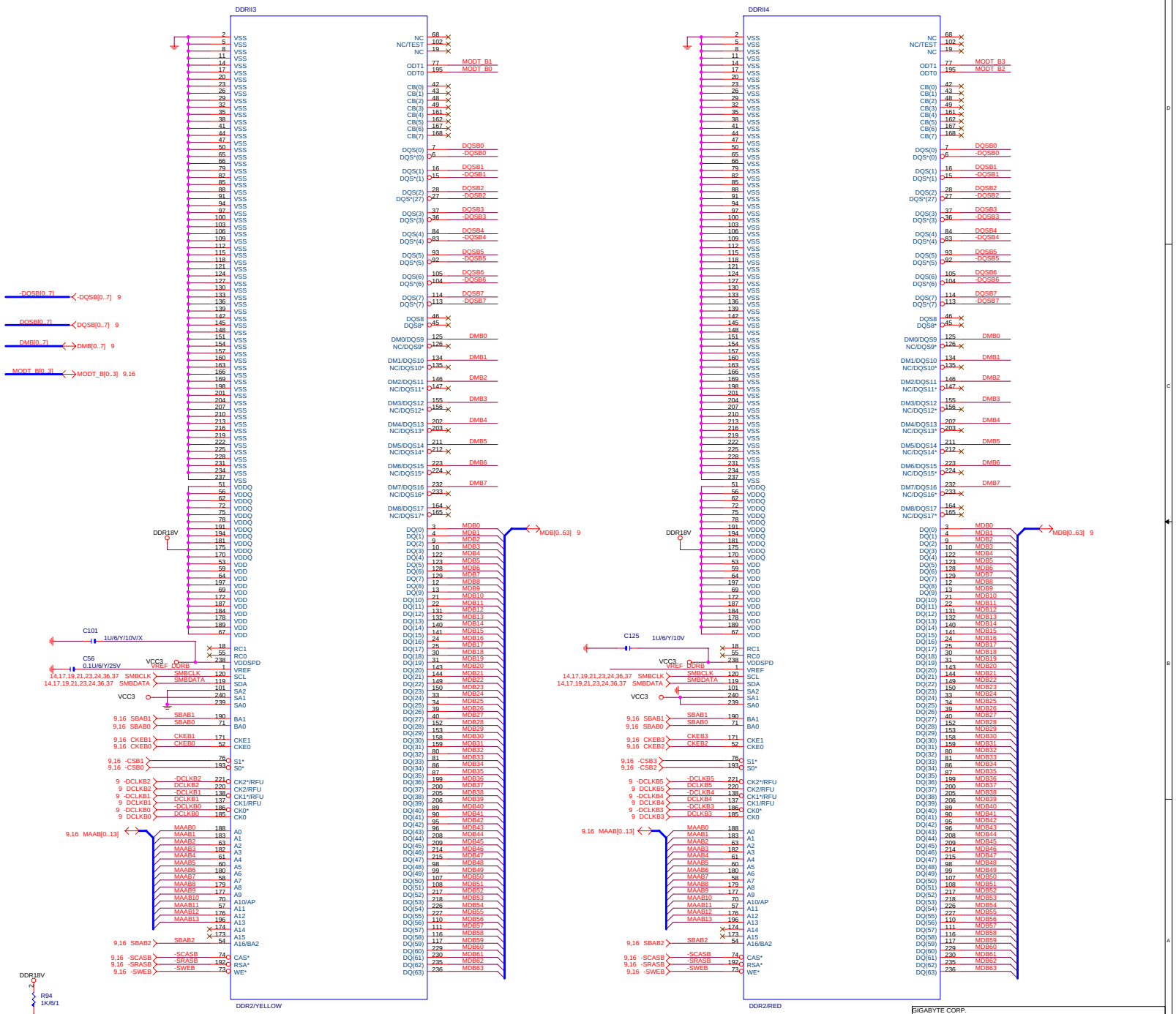

GIGABYTE CORP.

Title: **DDRII CHANNEL B**

Size	Document Number	Rev
Custom	8I945G	1.1

Date: Sheet 15 of 44

DDR TERMINATION CHANNEL A

DDRVTT Decouple

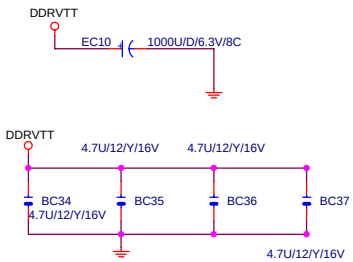

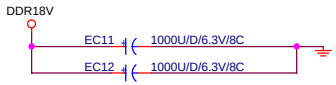

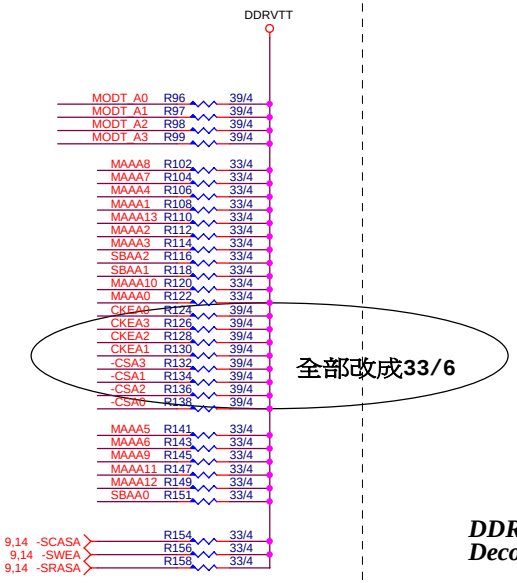

全部改成33/6

DDR18V Decouple

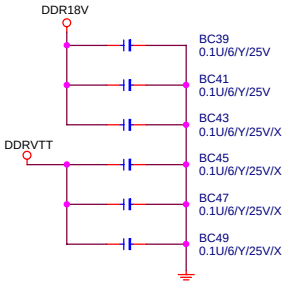

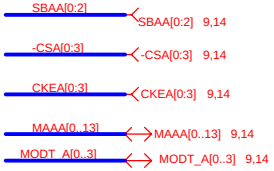

CHANNEL B

DDRVTT Decouple

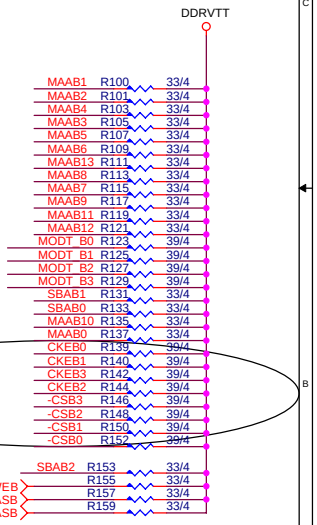

全部改成33/6

DDR18V Decouple

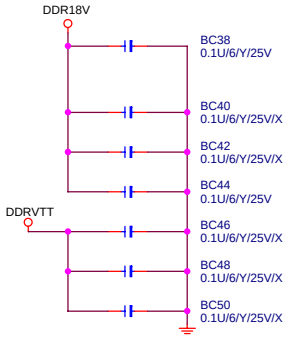

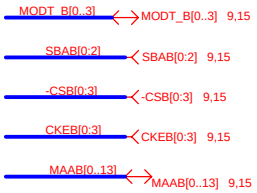

Intel Confidential

Title	DDRII TERMINATOR		
Size B	Document Number 8I945G		Rev 1.1
Date: Tuesday, November 01, 2005	Sheet 16 of 44		

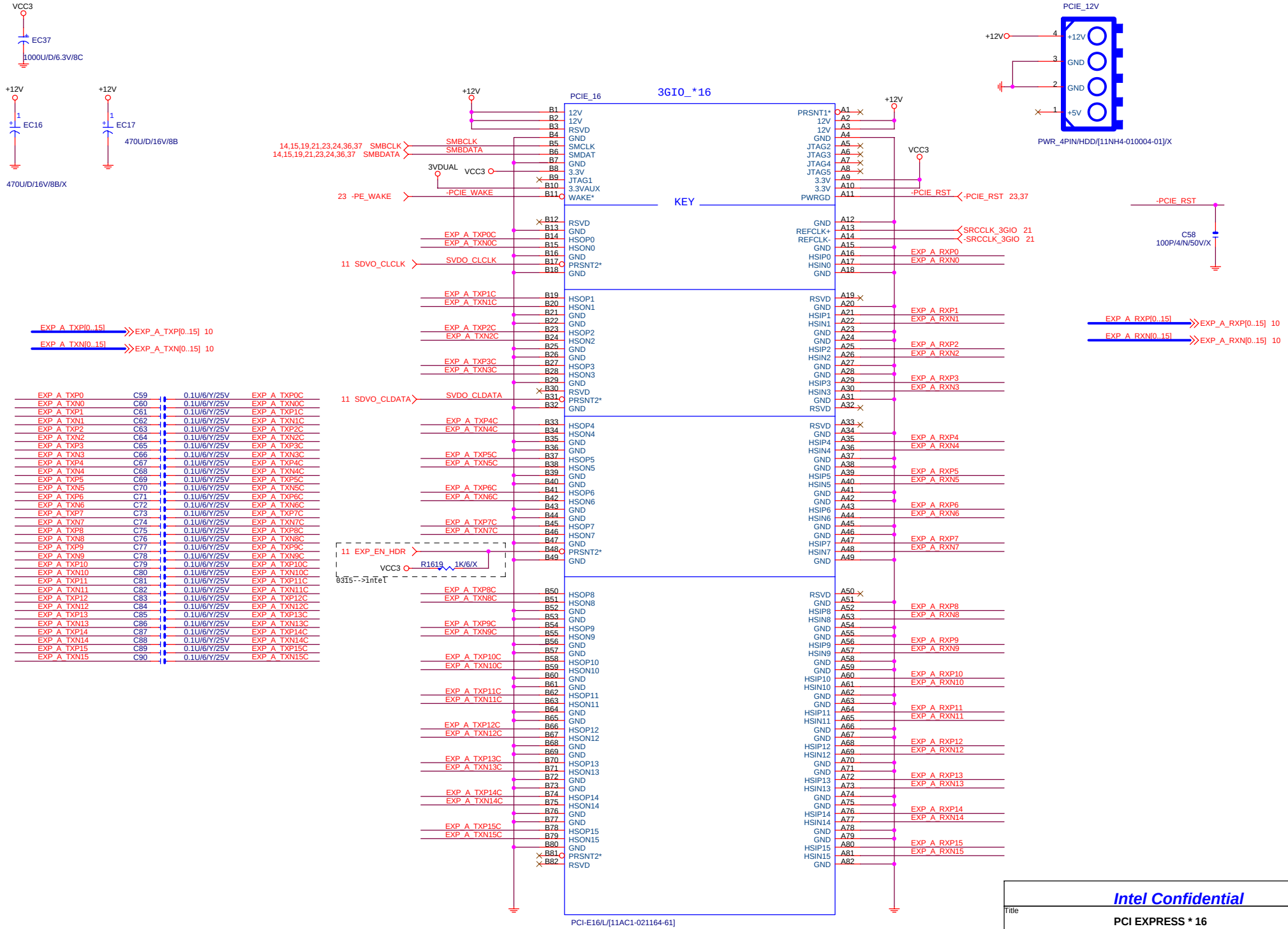

Intel Confidential

Title	PCI EXPRESS * 16		
Size Custom	Document Number 8I945G		Rev 1.1
Date: Tuesday, November 01, 2005	Sheet 17 of 44		

FOR ICH7R POWER ON 瞬間會HIGH 到1.8V 之後0V,必須PULL DOWN 1K/6

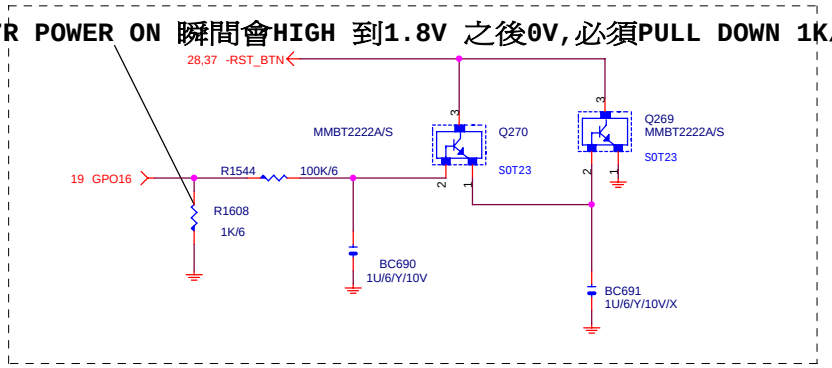

H/W RESET

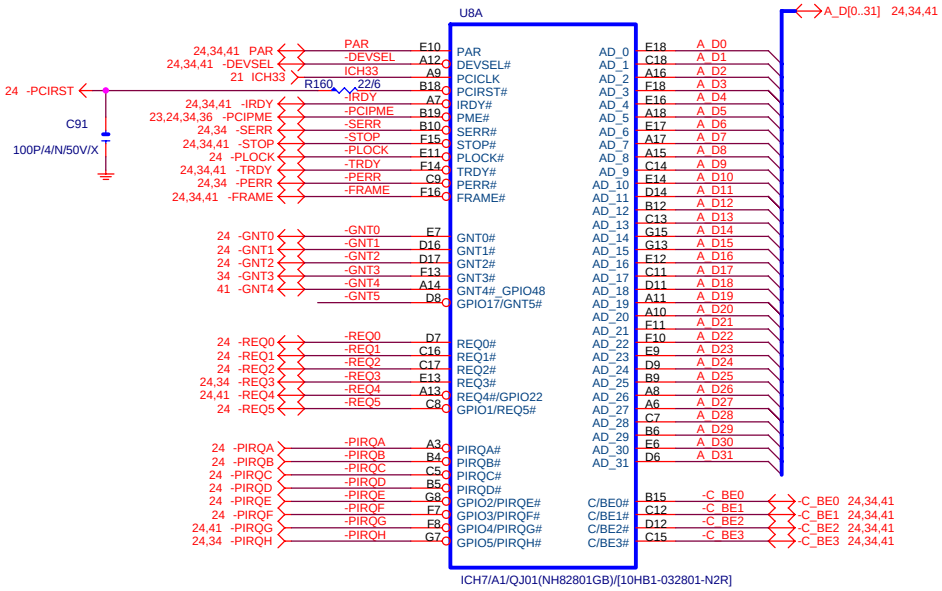

10HB1-032801-M1 REV:NON

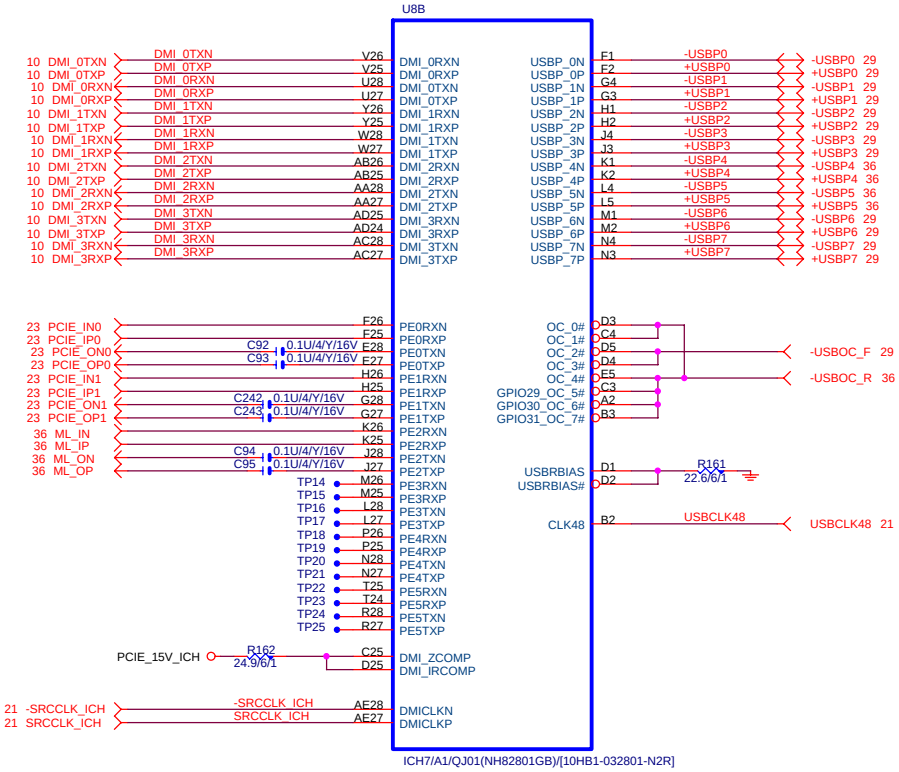

SB_HEATSIN

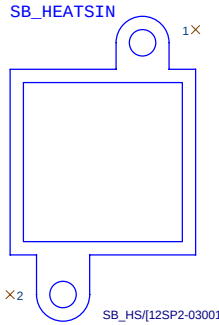

PCI_BT2: OPEN FWH

CLOSE SPI

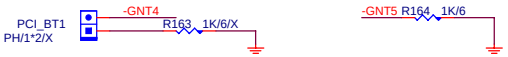

Intel Confidential

Title	ICH6-PCI, DMI, LAN, USB	
Size B	Document Number 8I945G	Rev 1.1
Date: Tuesday, November 01, 2005	Sheet 18 of 44	

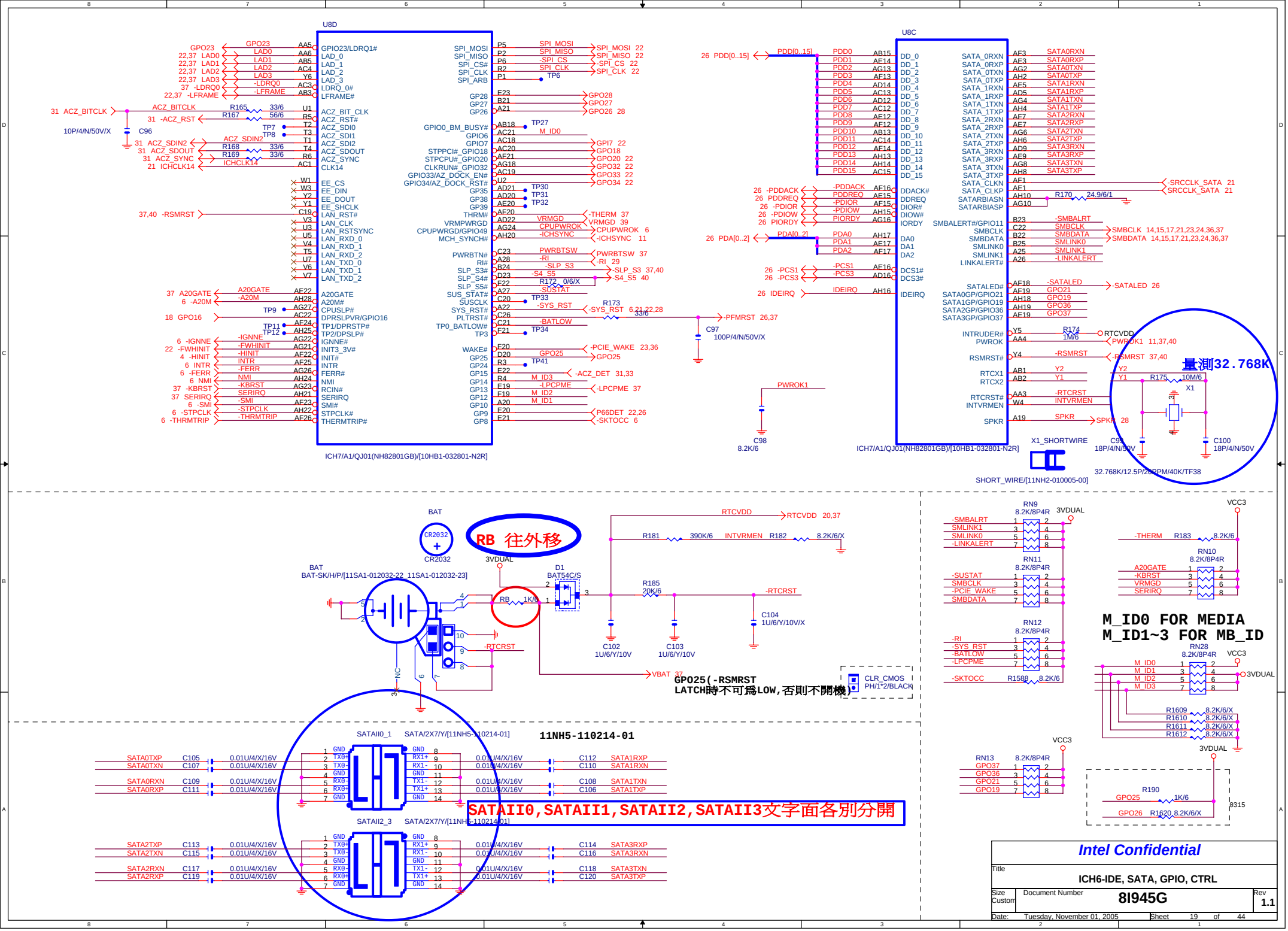
U8D
ICH7/A1/QJ01(NH82801GB)/[10HB1-032801-N2R]
U8C
ICH7/A1/QJ01(NH82801GB)/[10HB1-032801-N2R]
量測32.768K
RB 往外移
BAT
BAT-SK/H/P/[11SA1-012032-22_11SA1-012032-23]
CR2032
D1
BAT54C/S
GPO25(-RSMRST
LATCH時不可爲LOW,否則不開機)
CLR_CMOS
PH/1*2/BLACK
M_ID0 FOR MEDIA
M_ID1~3 FOR MB_ID
SATAII0_1
SATA2X7/Y/[11NH5-110214-01]
11NH5-110214-01
SATAII2_3
SATAII0,SATAII1,SATAII2,SATAII3文字面各別分開
Intel Confidential
Title
ICH6-IDE, SATA, GPIO, CTRL
Size
Custom
Document Number
8I945G
Rev
1.1
Date: Tuesday, November 01, 2005
Sheet 19 of 44

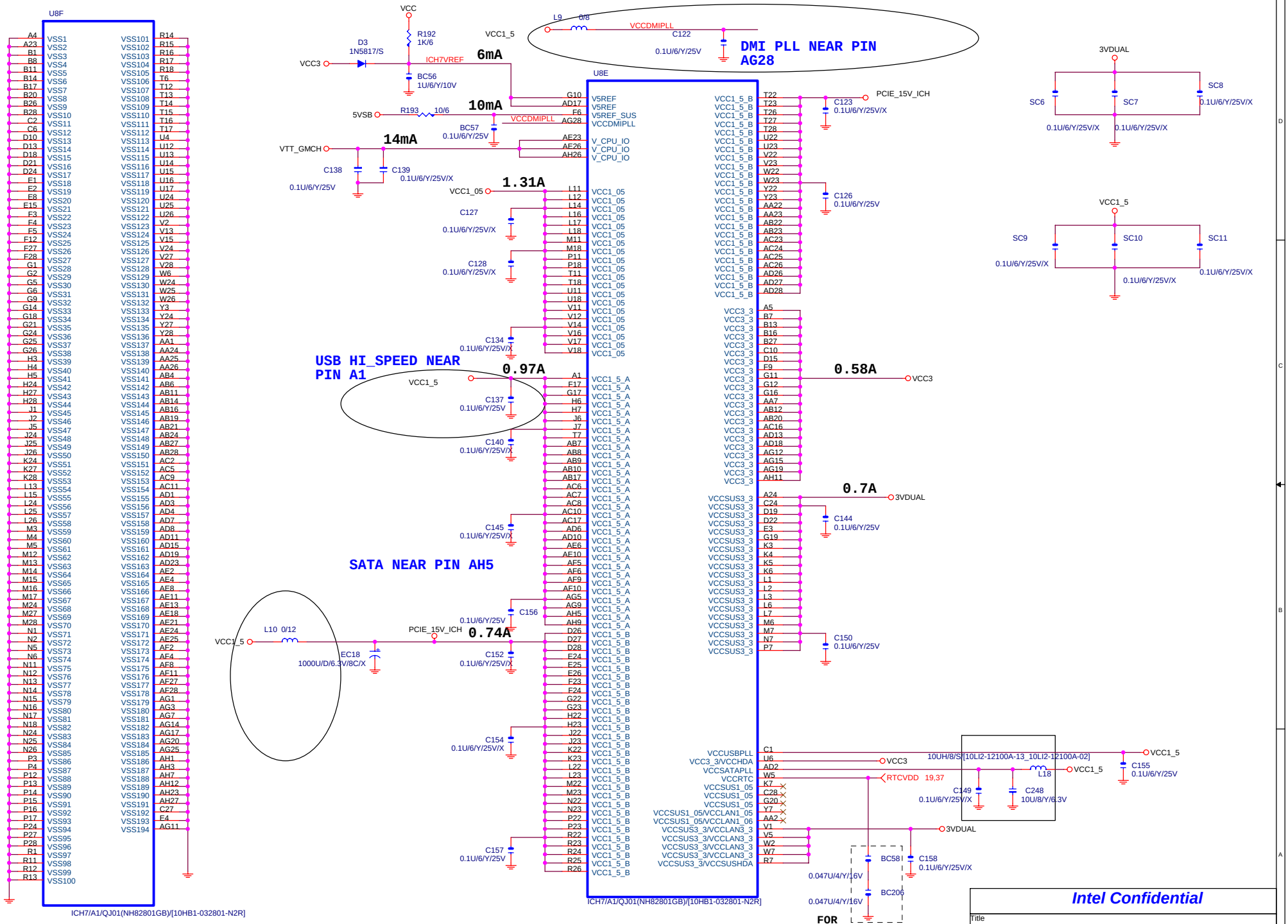
U8F
U8E
VCC
R192
1K/6
D3
1N5817/S
VCC3
ICH7VREF
BC56
1U/6/Y/10V
6mA
VCC1_5
L9
0/8
VCCDMIPLL
C122
0.1U/6/Y/25V
DMI PLL NEAR PIN
AG28
5VSB
R193
10/6
10mA
BC57
0.1U/6/Y/25V
VTT_GMCH
14mA
C138
0.1U/6/Y/25V
C139
0.1U/6/Y/25V/X
VCC1_05
1.31A
C127
0.1U/6/Y/25V/X
C128
0.1U/6/Y/25V/X
C134
0.1U/6/Y/25V/X
USB HI_SPEED NEAR
PIN A1
0.97A
C137
0.1U/6/Y/25V
C140
0.1U/6/Y/25V/X
C145
0.1U/6/Y/25V/X
SATA NEAR PIN AH5
C156
0.1U/6/Y/25V
L10
0/12
PCIE_15V_ICH
0.74A
EC18
1000U/D/6.3V/8C/X
C152
0.1U/6/Y/25V/X
C154
0.1U/6/Y/25V/X
C157
0.1U/6/Y/25V
PCIE_15V_ICH
C123
0.1U/6/Y/25V/X
C126
0.1U/6/Y/25V
0.58A
VCC3
0.7A
3VDUAL
C144
0.1U/6/Y/25V
C150
0.1U/6/Y/25V
VCCSUS3_3
VCCSUS3_3
VCCSUS3_3

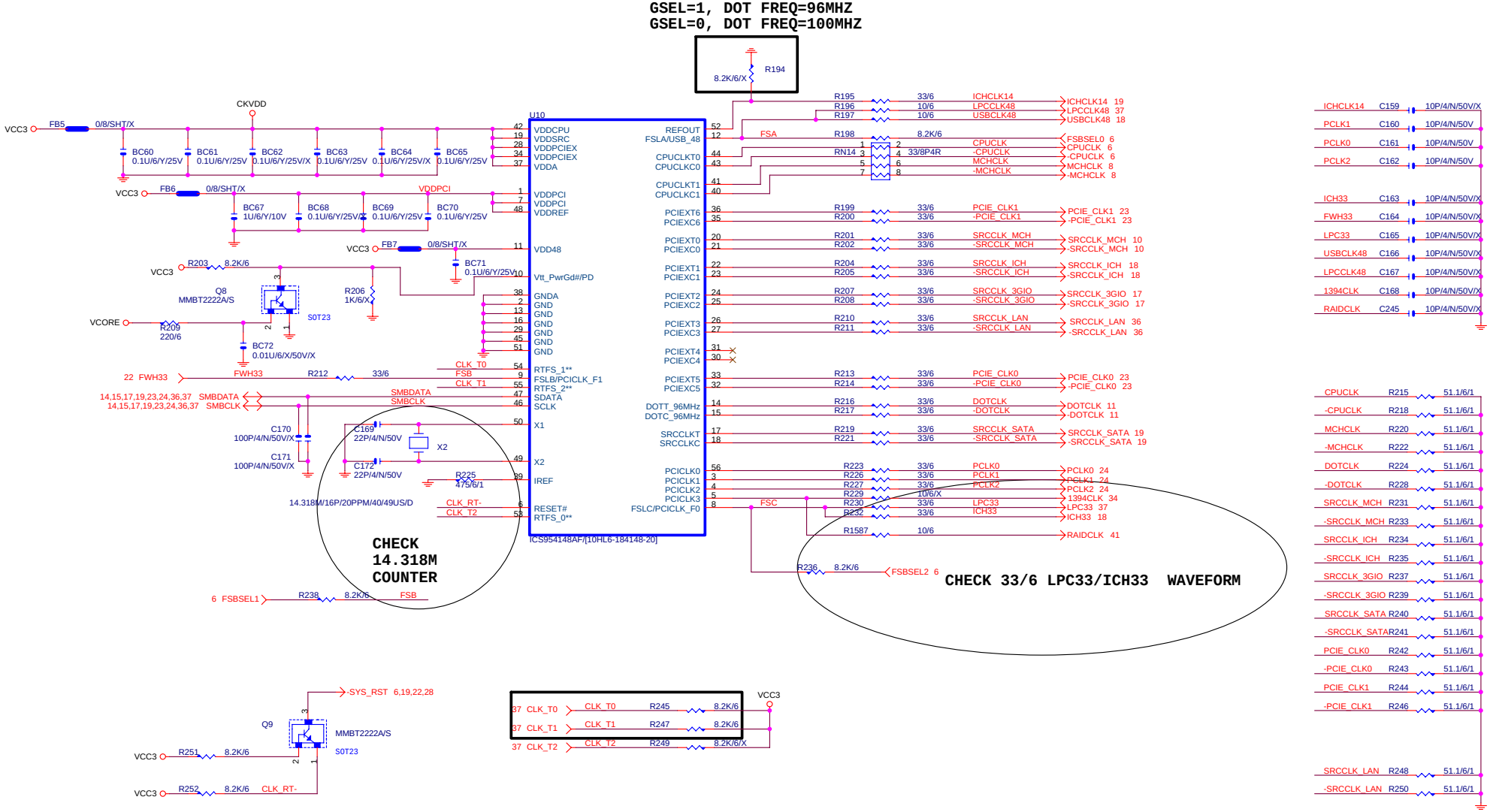

Intel Confidential

Title	ICS954148AF
Size / Document Number	Custom / 8I945G
Rev	1.1
Date:	Tuesday, November 01, 2005
Sheet	21 of 44

ATX POWER CONNECTOR

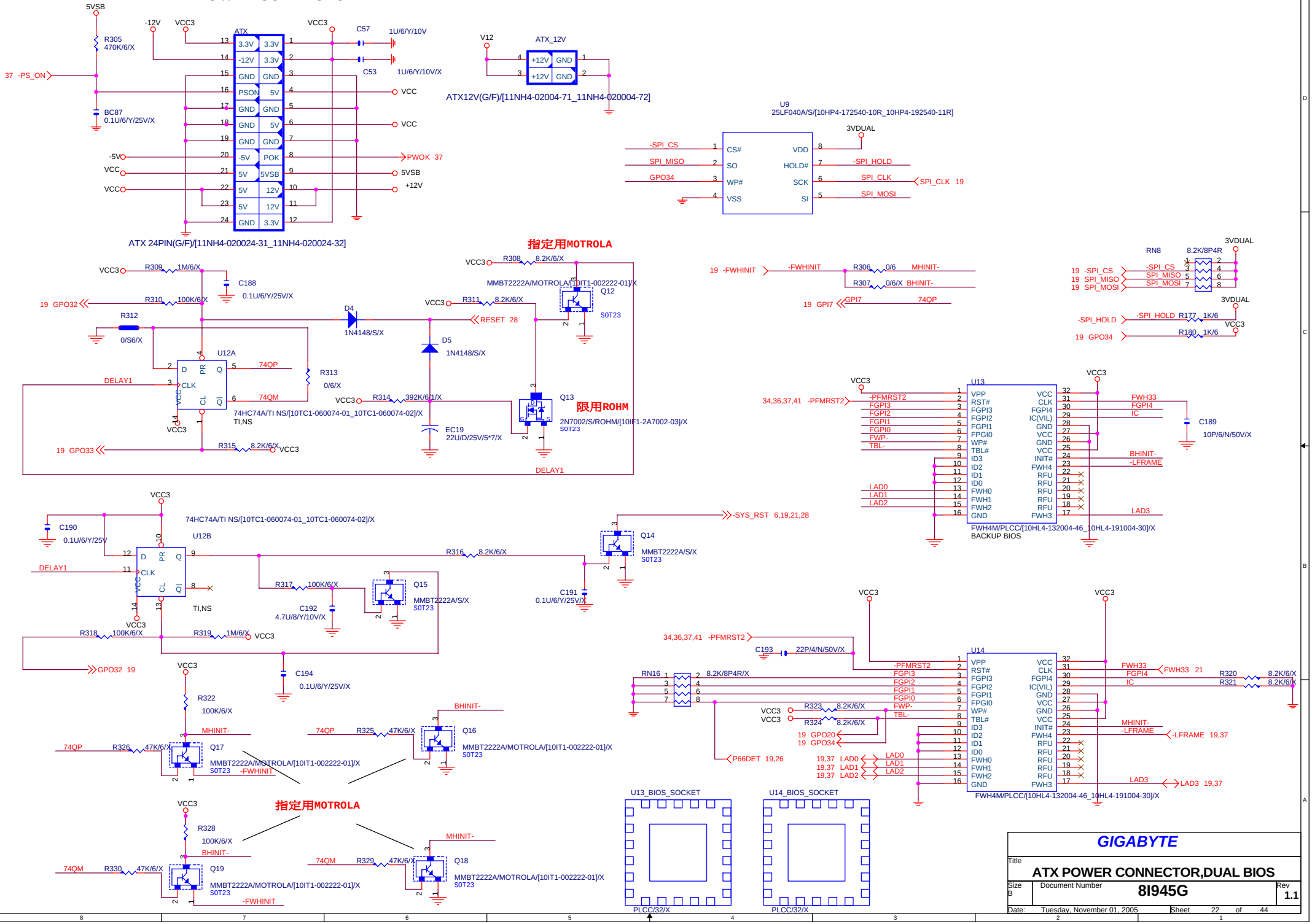

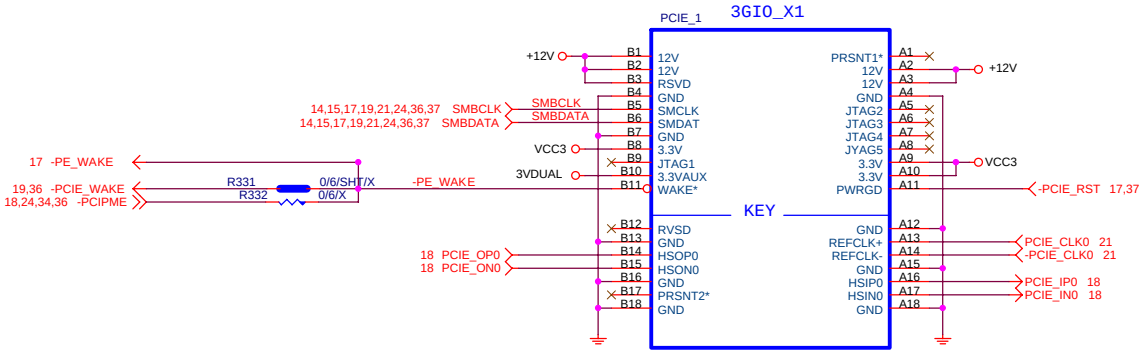

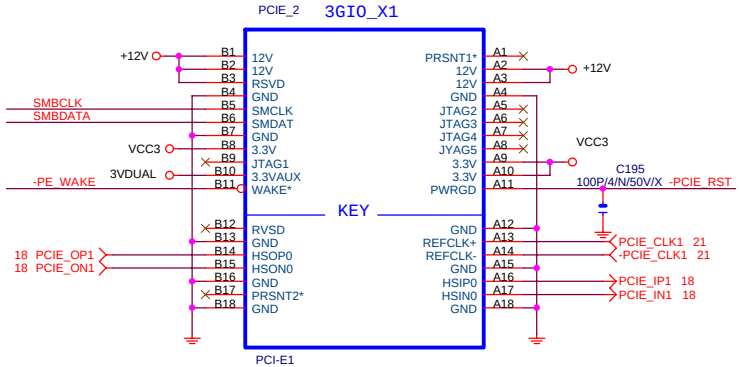

Intel Confidential

Title	PCI E SLOT 1, 2, 3	
Size B	Document Number 8I945G	Rev 1.1
Date: Tuesday, November 01, 2005	Sheet 23 of 44	

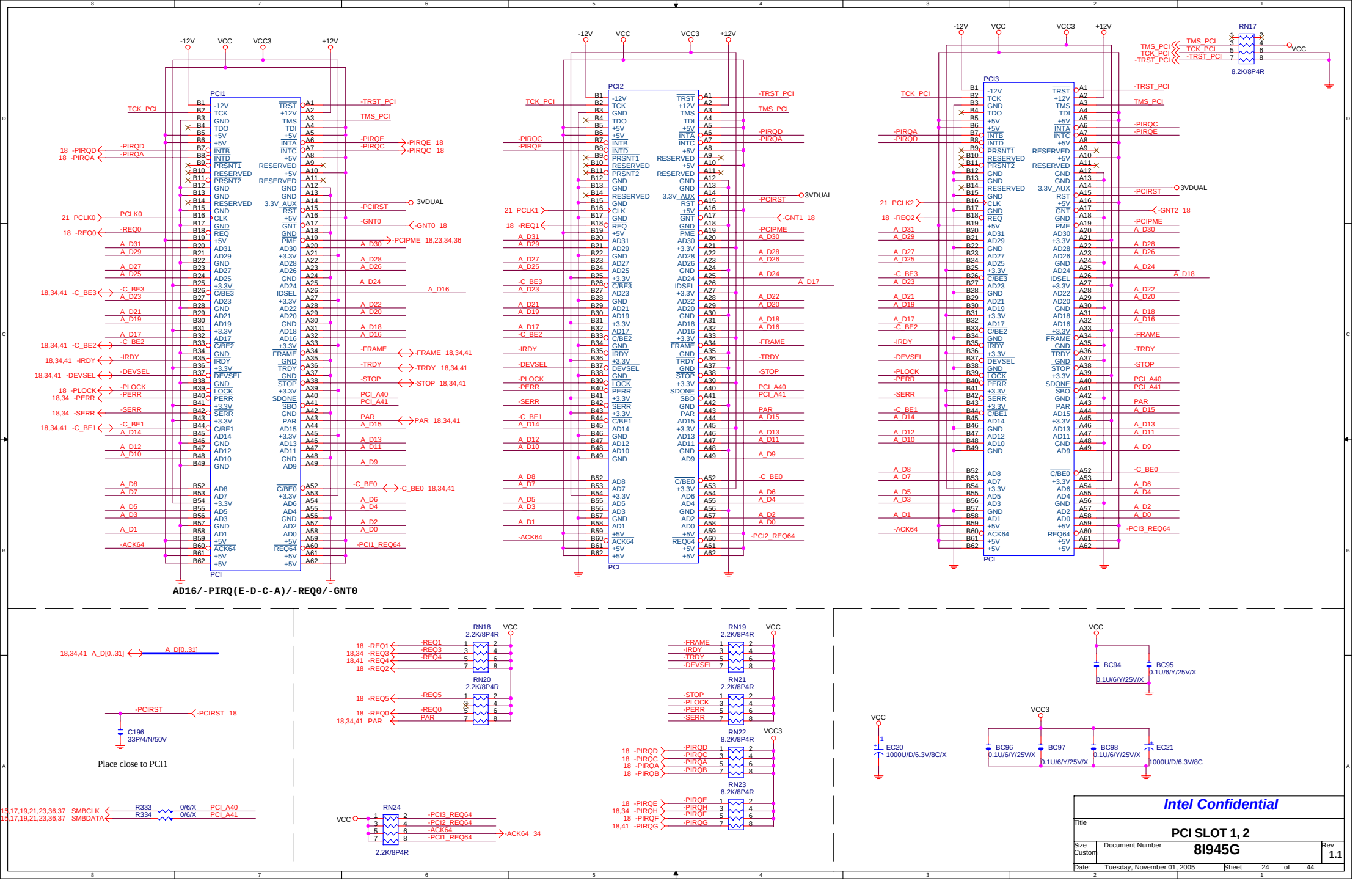
PCI1
PCI2
PCI3
PCI
-12V
VCC
VCC3
+12V
AD16/-PIRQ(E-D-C-A)/-REQ0/-GNT0
RN17
8.2K/8P4R
RN18
2.2K/8P4R
RN19
2.2K/8P4R
RN20
2.2K/8P4R
RN21
2.2K/8P4R
RN22
8.2K/8P4R
RN23
8.2K/8P4R
RN24
2.2K/8P4R
C196
33P/4/N/50V
Place close to PCI1
R333
R334
0/6/X
BC94
BC95
0.1U/6/Y/25V/X
EC20
1000U/D/6.3V/8C/X
BC96
BC97
BC98
EC21
1000U/D/6.3V/8C
Intel Confidential
Title
PCI SLOT 1, 2
Size
Custom
Document Number
8I945G
Rev
1.1
Date:
Tuesday, November 01, 2005
Sheet
24
of
44

TEMP. SENSE

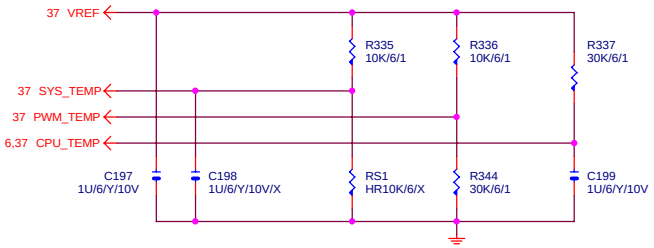

VOLTAGE SENSE

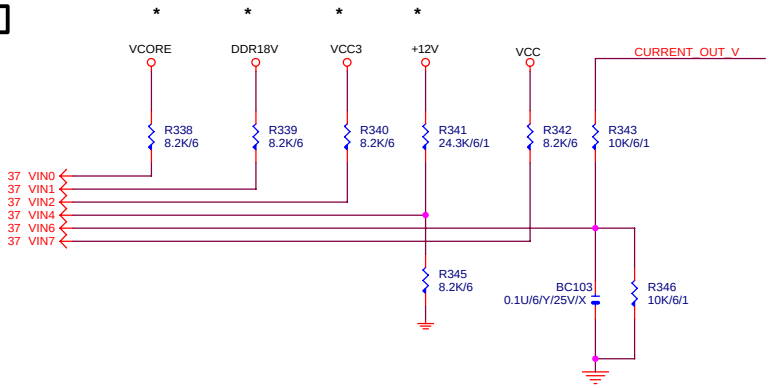

DUAL POWER

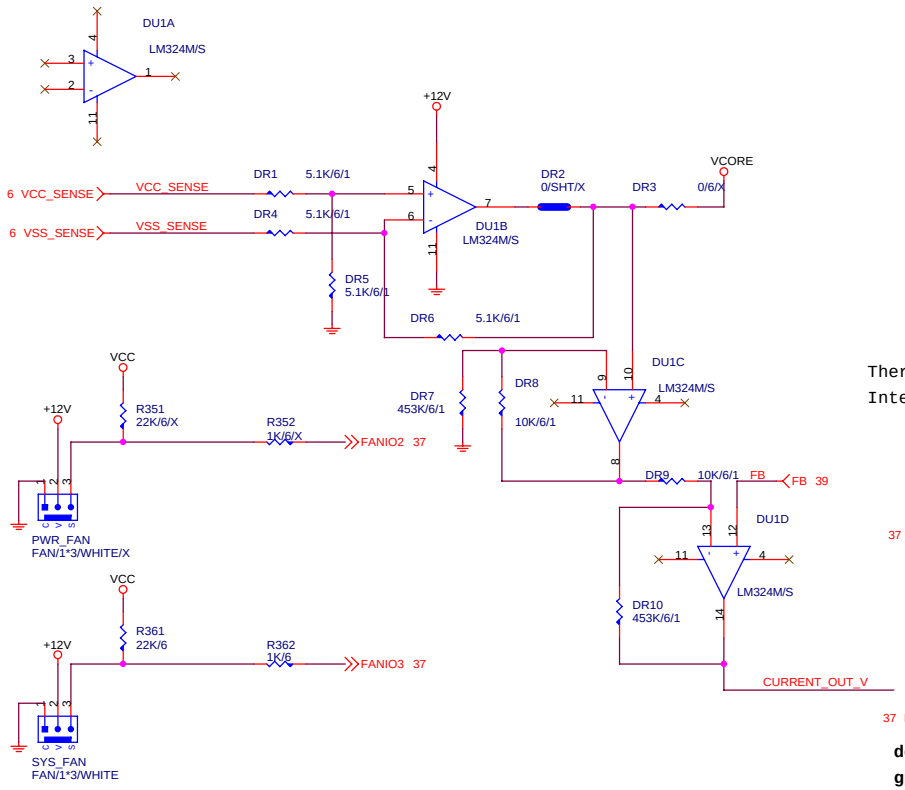

CPU/SYS FAN

```
If use PBSS5240 1pcs : (non airflow)
-------------------------------------
CPUFAN_VCC=12V: Temp=40 deg
CPUFAN_VCC=11V: Temp=82 deg
CPUFAN_VCC=10V: Temp=70 deg
CPUFAN_VCC= 9V: Temp=110 deg
CPUFAN_VCC= 8V: Temp>200 deg
```

```
If use PBSS5240 1pcs : (with airflow)
-------------------------------------
CPUFAN_VCC=12V: Temp=33 deg
CPUFAN_VCC=11V: Temp=62 deg
CPUFAN_VCC=10V: Temp=86 deg
CPUFAN_VCC= 9V: Temp=117 deg
CPUFAN_VCC= 8V: Temp>122 deg
```

ThermalTake FAN Power Consumption: 0.82A
Intel FAN Power Consumption Spec: 1.1A

+12V不需預留330uF電容

TO252 & SOT23
Co-Layout

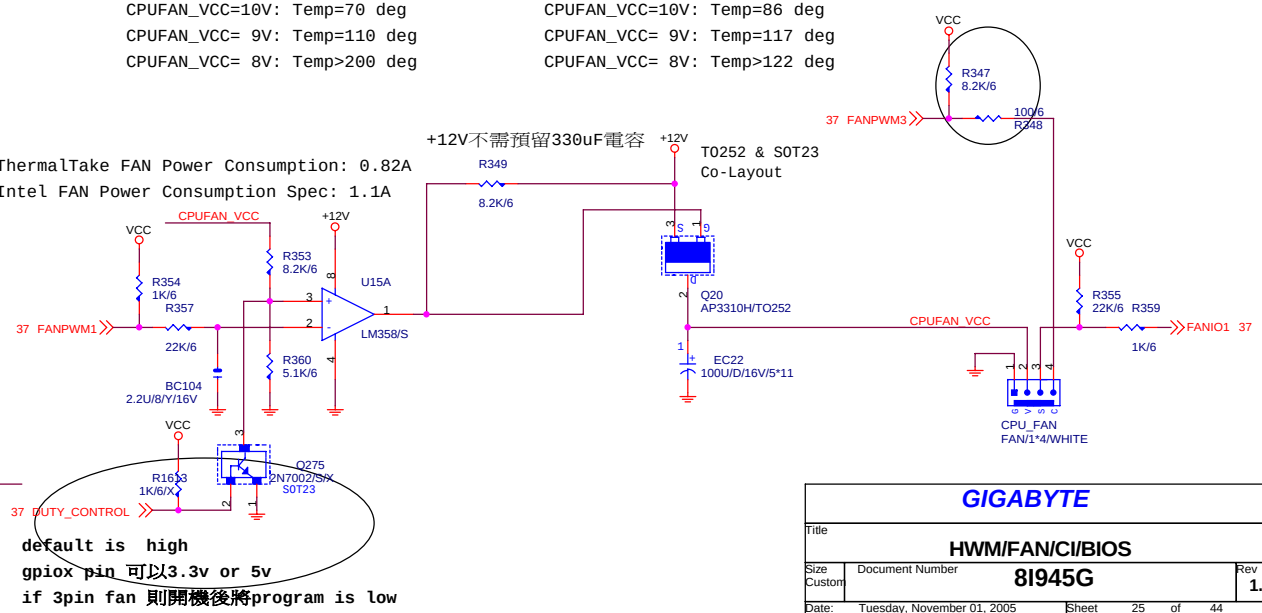

default is high
gpiox pin 可以3.3v or 5v
if 3pin fan 則開機後將program is low

GIGABYTE			
Title	HWM/FAN/CI/BIOS		
Size Custom	Document Number 8I945G		Rev 1.1
Date: Tuesday, November 01, 2005	Sheet 25 of 44		

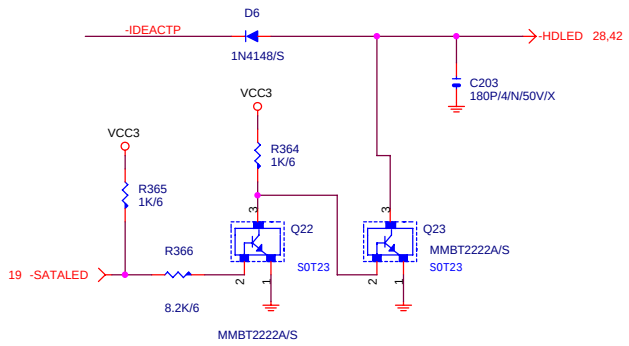

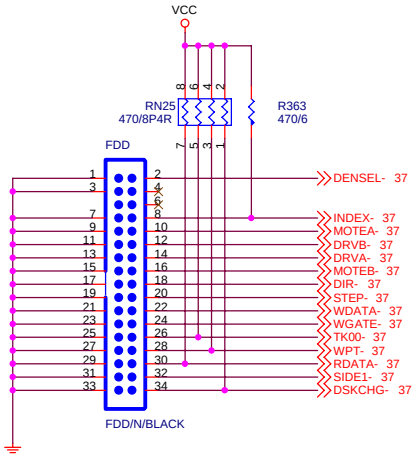

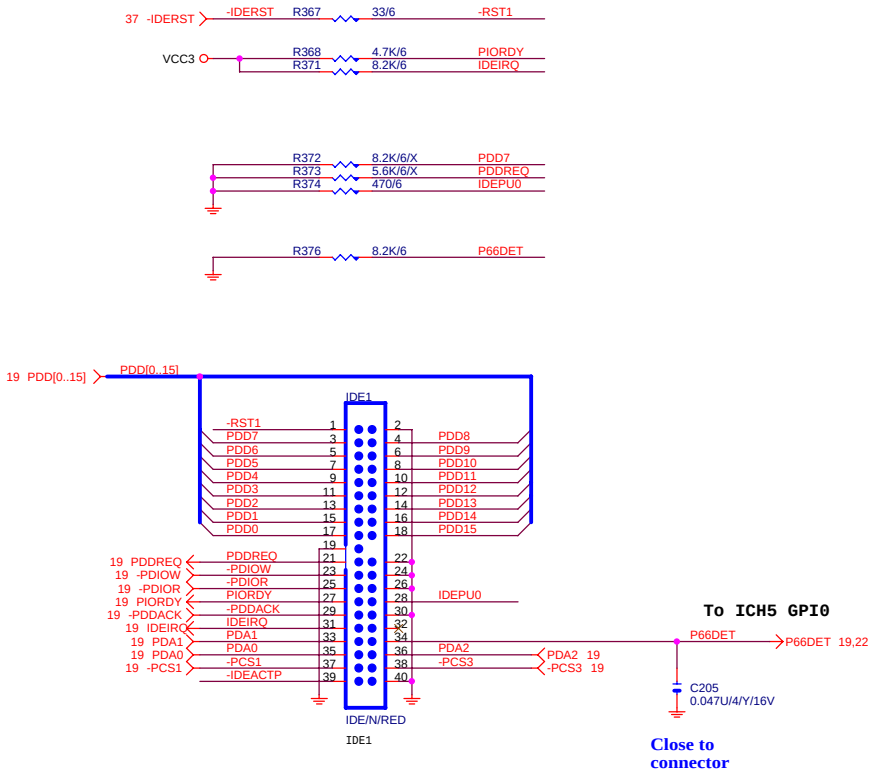

PRIMARY IDE CONNECTOR

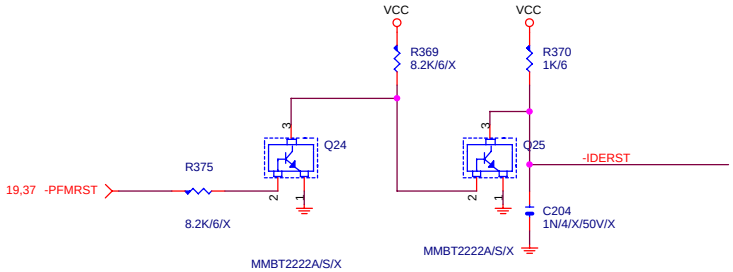

Default 不上,由IT8712 OUTPUT,REV0.2 驗證

Intel Confidential			
Title	IDE		
Size B	Document Number 8I945G		Rev 1.1
Date: Tuesday, November 01, 2005	Sheet 26 of 44		

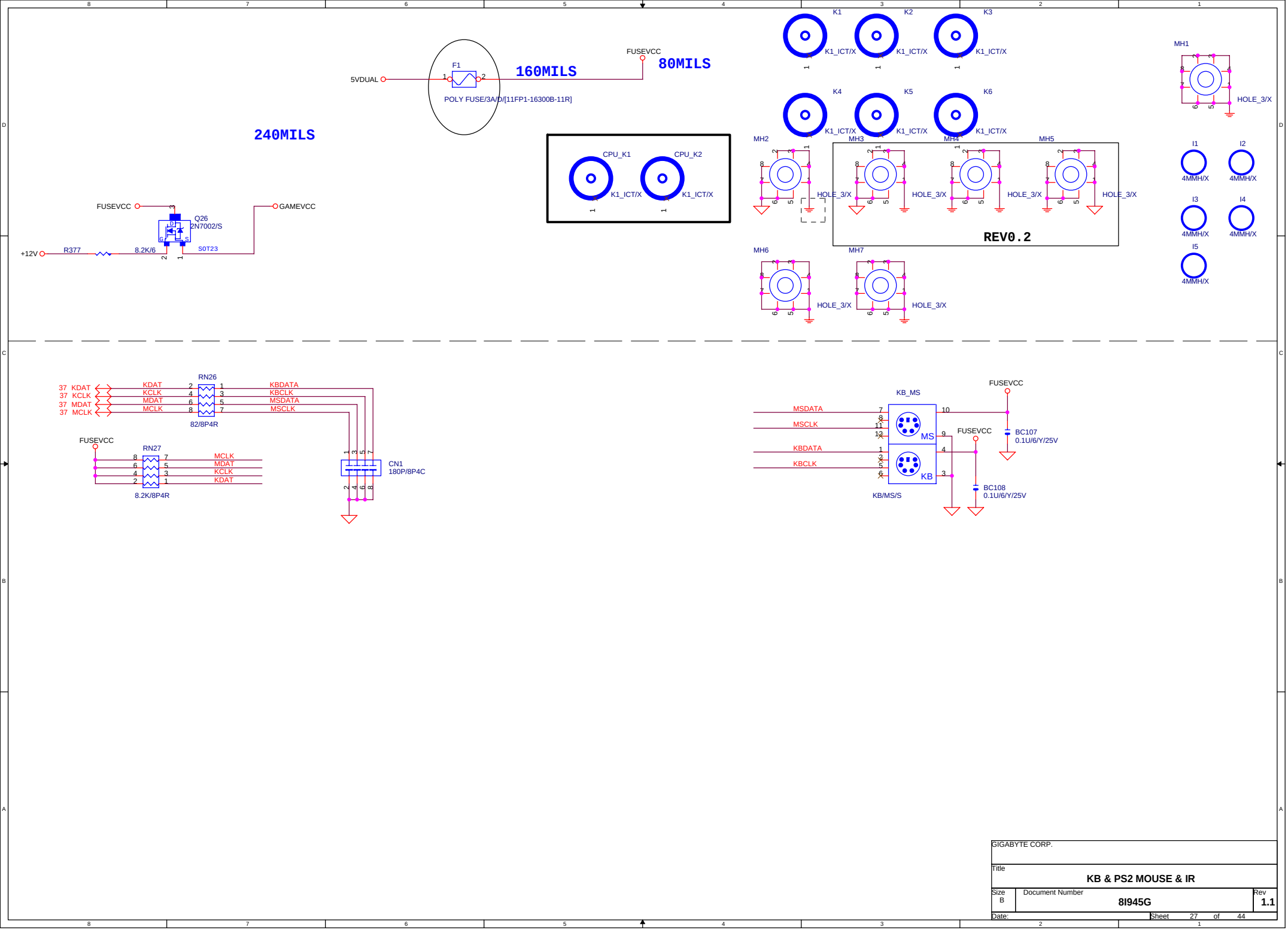

GIGABYTE CORP.		
Title	KB & PS2 MOUSE & IR	
Size B	Document Number 8I945G	Rev 1.1
Date:	Sheet 27 of 44	

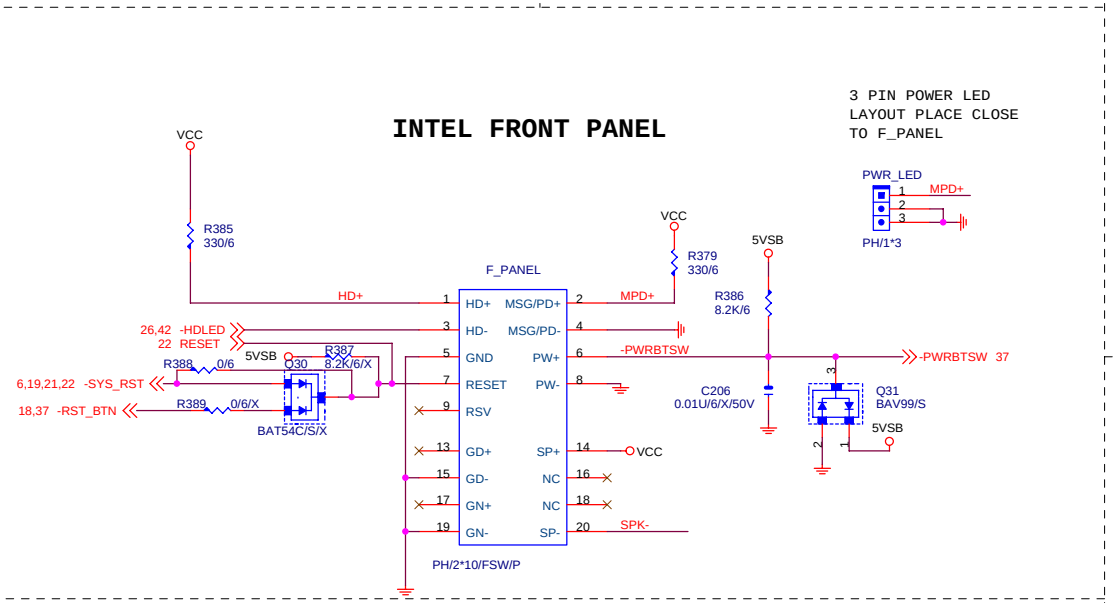

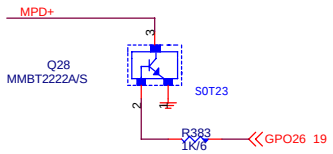

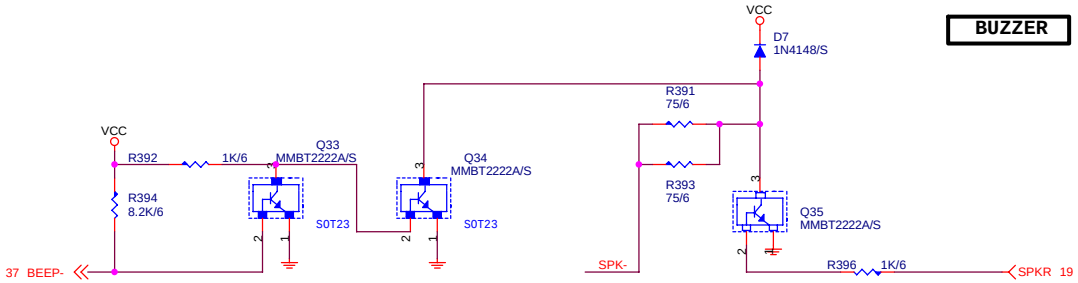

Intel Confidential

Title	FRONT PANEL	
Size Custom	Document Number 8I945G	Rev 1.1
Date: Tuesday, November 01, 2005	Sheet 28 of 44	

FRONT USB

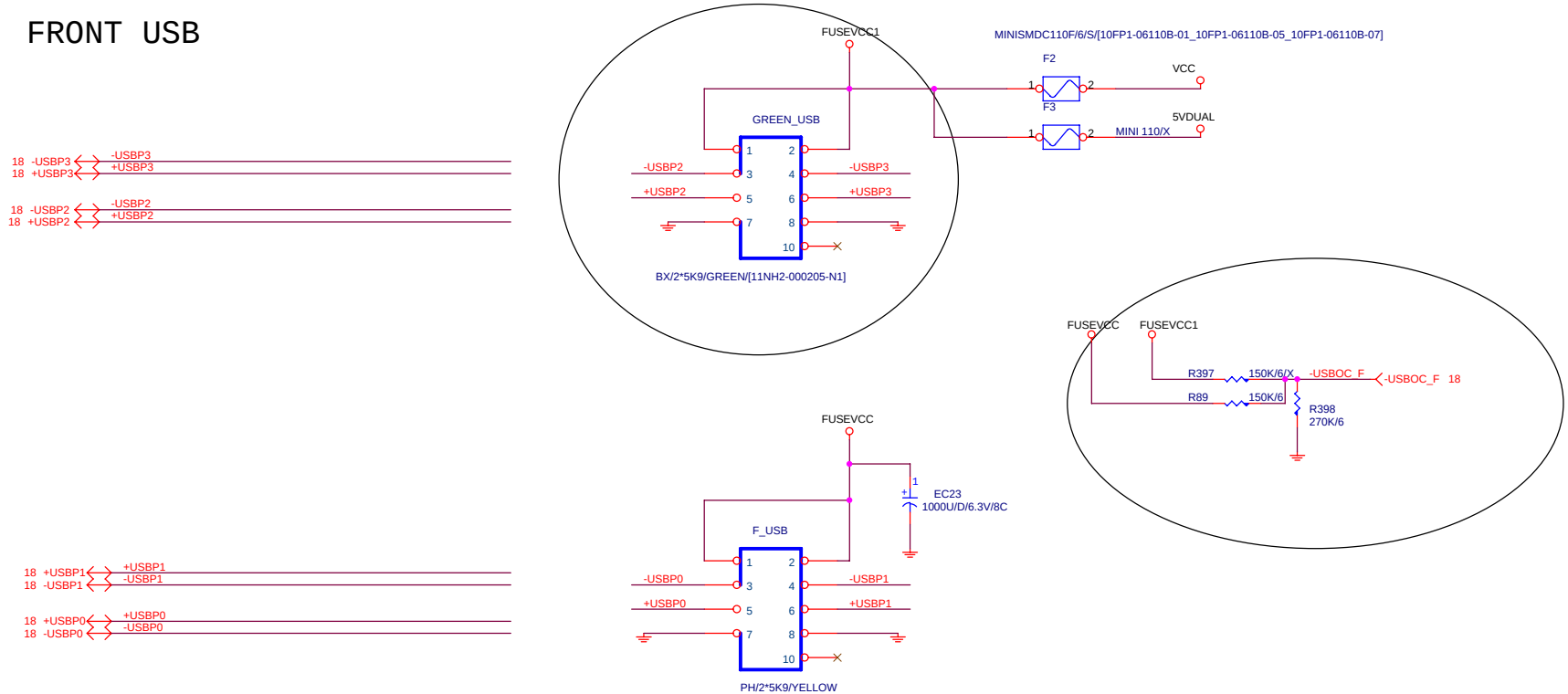

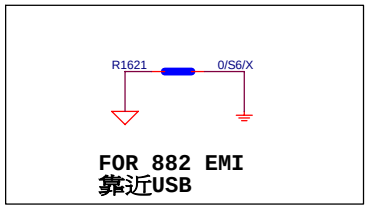

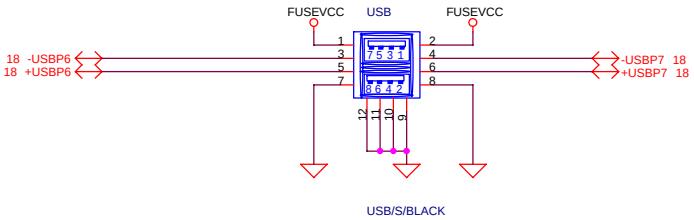

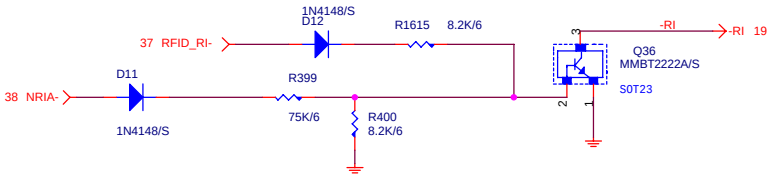

Intel Confidential

Title	FRONT USB CONNECTOR	
Size B	Document Number 8I945G	Rev 1.1
Date: Tuesday, November 01, 2005	Sheet 29 of 44	

asserted at 131 degree
deasserted at 116 degree

RS2 CLOSE CPU VR MOSFET

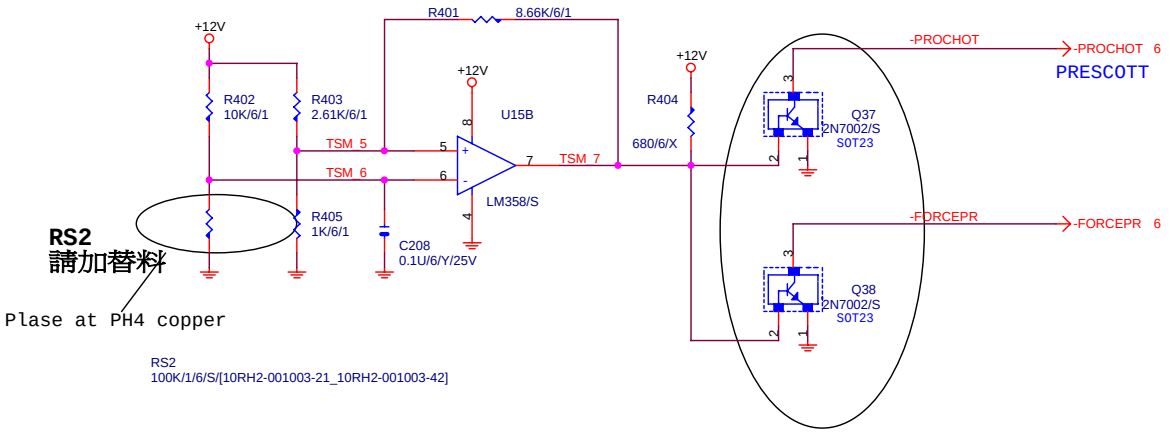

Intel Confidential			
Title	FAN CONTROL		
Size B	Document Number 8I945G		Rev 1.1
Date: Tuesday, November 01, 2005	Sheet 30 of 44		

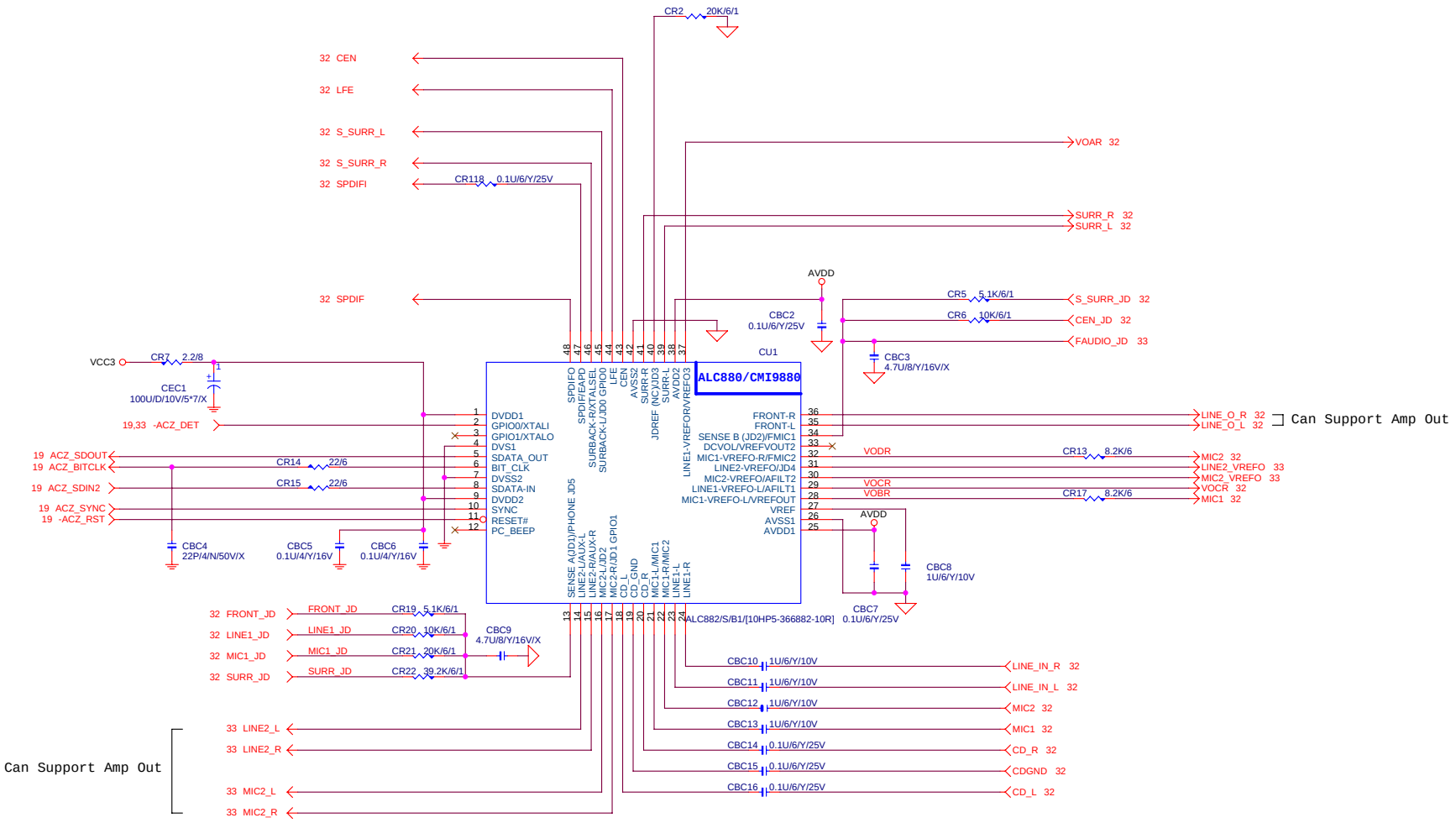

Intel Confidential

Title	AC97 ALC658	
Size Custom	Document Number 8I945G	Rev 1.1
Date: Tuesday, November 01, 2005	Sheet 31 of 44	

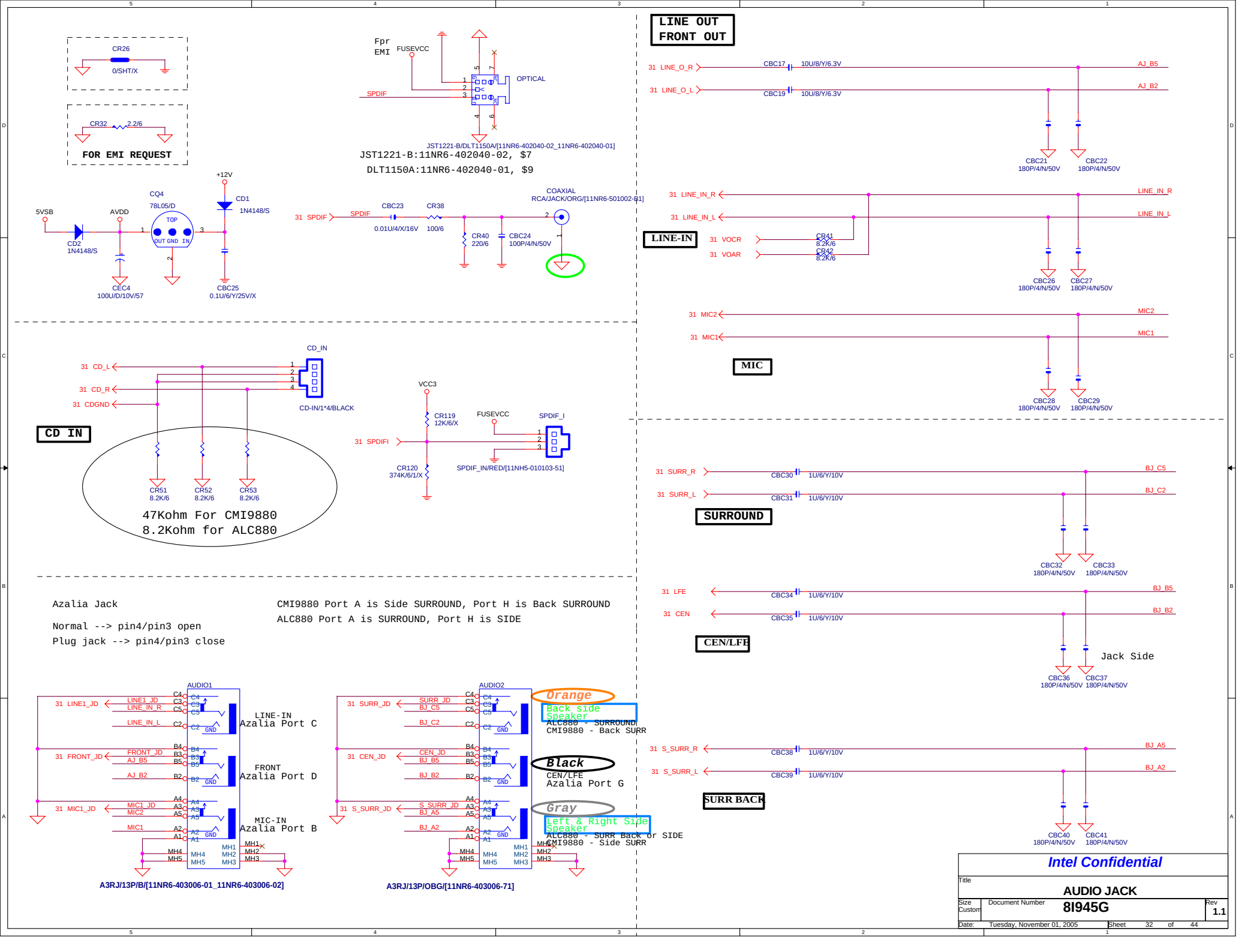
CR26
0/SHT/X
CR32
2.2/6
FOR EMI REQUEST
Fpr EMI
FUSEVCC
SPDIF
OPTICAL
JST1221-B/DLT1150A/[11NR6-402040-02_11NR6-402040-01]
JST1221-B:11NR6-402040-02, $7
DLT1150A:11NR6-402040-01, $9
+12V
CQ4
78L05/D
5VSB
AVDD
CD1
1N4148/S
CD2
1N4148/S
CEC4
100U/D/10V/57
CBC25
0.1U/6/Y/25V/X
31 SPDIF
CBC23
0.01U/4/X/16V
CR38
100/6
CR40
220/6
CBC24
100P/4/N/50V
COAXIAL
RCA/JACK/ORG/[11NR6-501002-01]
LINE OUT
FRONT OUT
31 LINE_O_R
31 LINE_O_L
CBC17
CBC19
10U/8/Y/6.3V
AJ_B5
AJ_B2
CBC21
CBC22
180P/4/N/50V
31 LINE_IN_R
31 LINE_IN_L
LINE_IN_R
LINE_IN_L
LINE-IN
31 VOCR
31 VOAR
CR41
CR42
8.2K/6
CBC26
CBC27
31 MIC2
31 MIC1
MIC2
MIC1
MIC
CBC28
CBC29
CD_IN
31 CD_L
31 CD_R
31 CDGND
CD-IN/1*4/BLACK
CD IN
CR51
CR52
CR53
8.2K/6
47Kohm For CMI9880
8.2Kohm for ALC880
VCC3
CR119
12K/6/X
FUSEVCC
SPDIF_I
31 SPDIFI
CR120
374K/6/1/X
SPDIF_IN/RED/[11NH5-010103-51]
31 SURR_R
31 SURR_L
CBC30
CBC31
1U/6/Y/10V
BJ_C5
BJ_C2
SURROUND
CBC32
CBC33
31 LFE
31 CEN
CBC34
CBC35
BJ_B5
BJ_B2
CEN/LFE
Jack Side
CBC36
CBC37
Azalia Jack
Normal --> pin4/pin3 open
Plug jack --> pin4/pin3 close
CMI9880 Port A is Side SURROUND, Port H is Back SURROUND
ALC880 Port A is SURROUND, Port H is SIDE
AUDIO1
31 LINE1_JD
LINE1_JD
LINE_IN_R
LINE_IN_L
LINE-IN
Azalia Port C
31 FRONT_JD
FRONT_JD
AJ_B5
AJ_B2
FRONT
Azalia Port D
31 MIC1_JD
MIC1_JD
MIC2
MIC1
MIC-IN
Azalia Port B
A3RJ/13P/B/[11NR6-403006-01_11NR6-403006-02]
AUDIO2
31 SURR_JD
SURR_JD
BJ_C5
BJ_C2
Orange
Back side Speaker
ALC880 - SURROUND
CMI9880 - Back SURR
31 CEN_JD
CEN_JD
BJ_B5
BJ_B2
Black
CEN/LFE
Azalia Port G
31 S_SURR_JD
S_SURR_JD
BJ_A5
BJ_A2
Gray
Left & Right Side Speaker
ALC880 - SURR Back or SIDE
CMI9880 - Side SURR
A3RJ/13P/OBG/[11NR6-403006-71]
31 S_SURR_R
31 S_SURR_L
CBC38
CBC39
BJ_A5
BJ_A2
SURR BACK
CBC40
CBC41
Intel Confidential
Title
AUDIO JACK
Size Custom
Document Number
8I945G
Rev 1.1
Date: Tuesday, November 01, 2005
Sheet 32 of 44

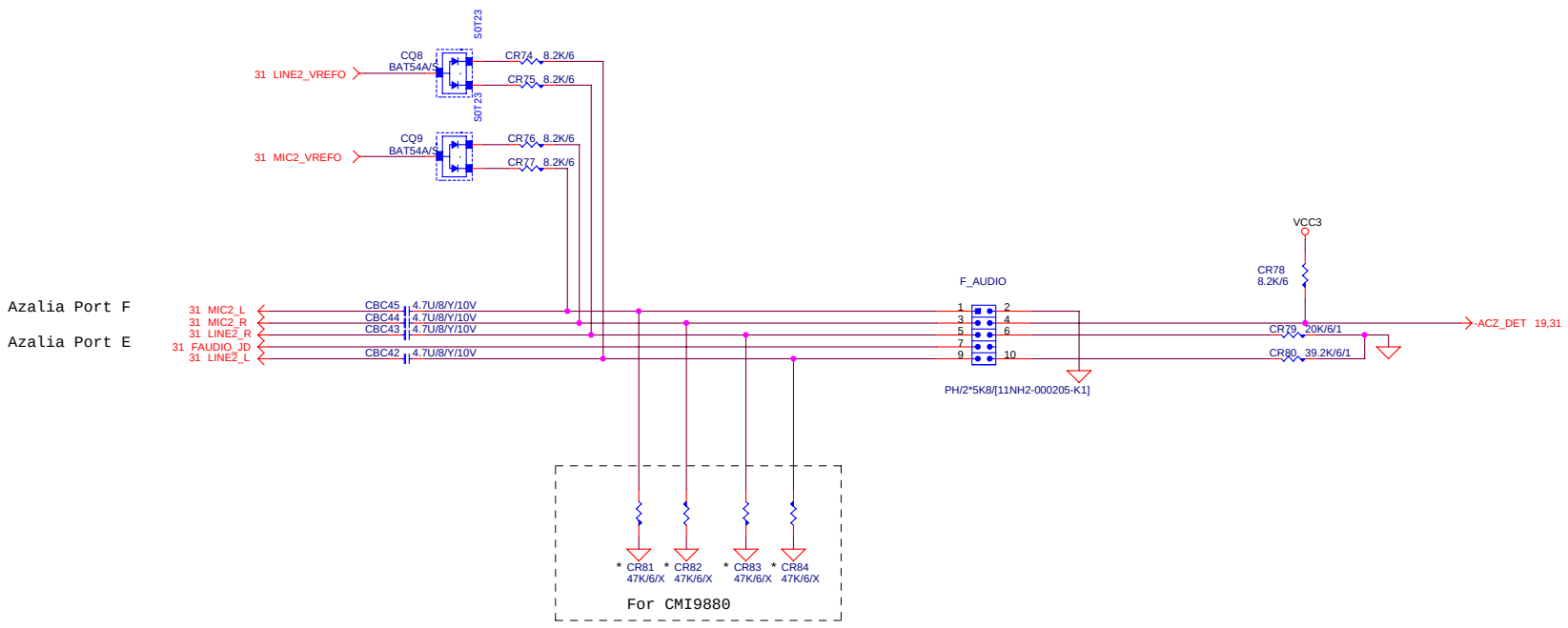

Intel Confidential

Title	FRONT AUDIO CONNECTOR	
Size Custom	Document Number 8I945G	Rev 1.1
Date: Tuesday, November 01, 2005	Sheet 33 of 44	

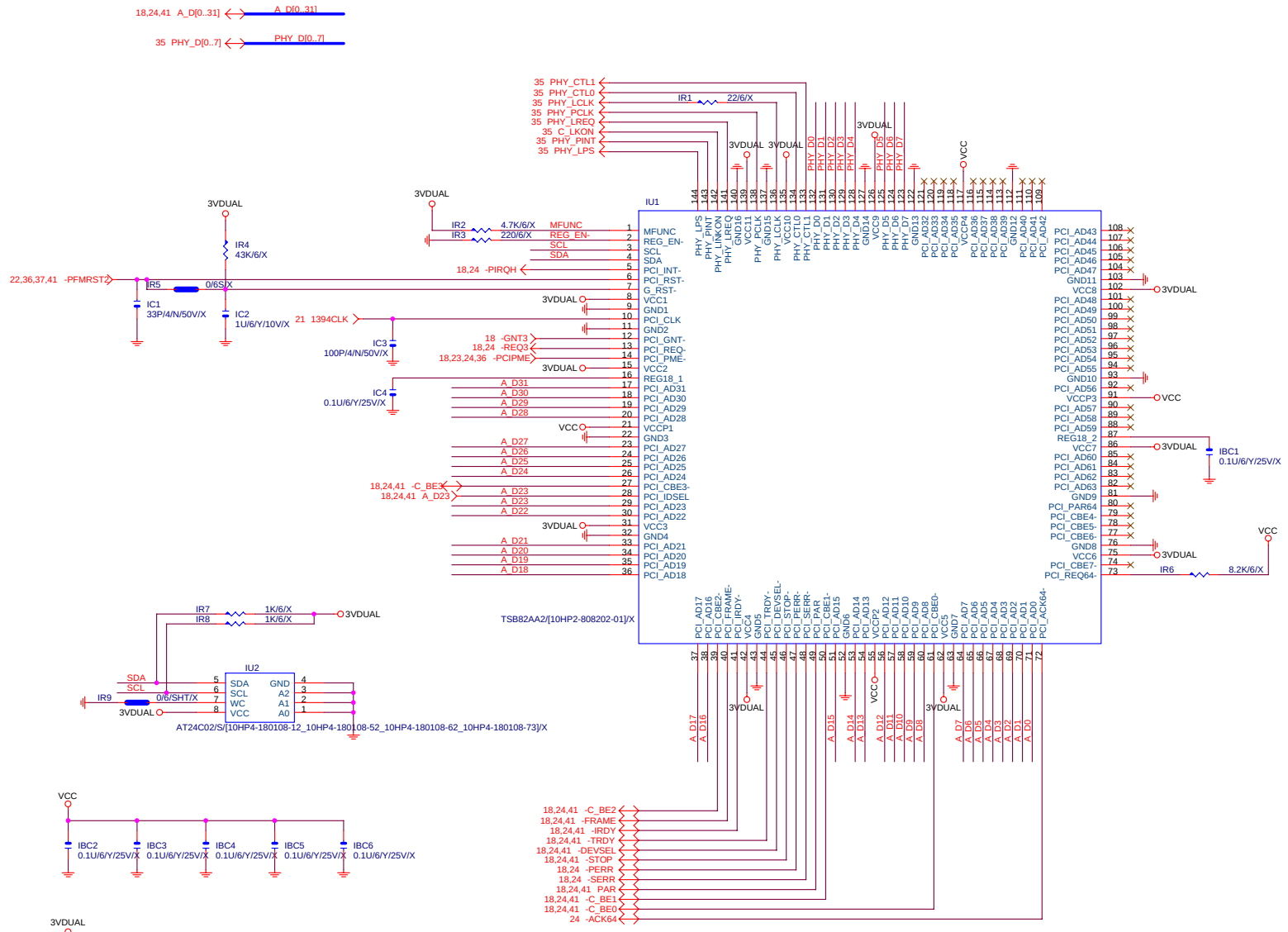

GIGABYTE

Title: **Ti1394b(CHEETAH)**

Size	Document Number	Rev
Custom	8I945G	1.1

Date: Tuesday, November 01, 2005 Sheet 34 of 44

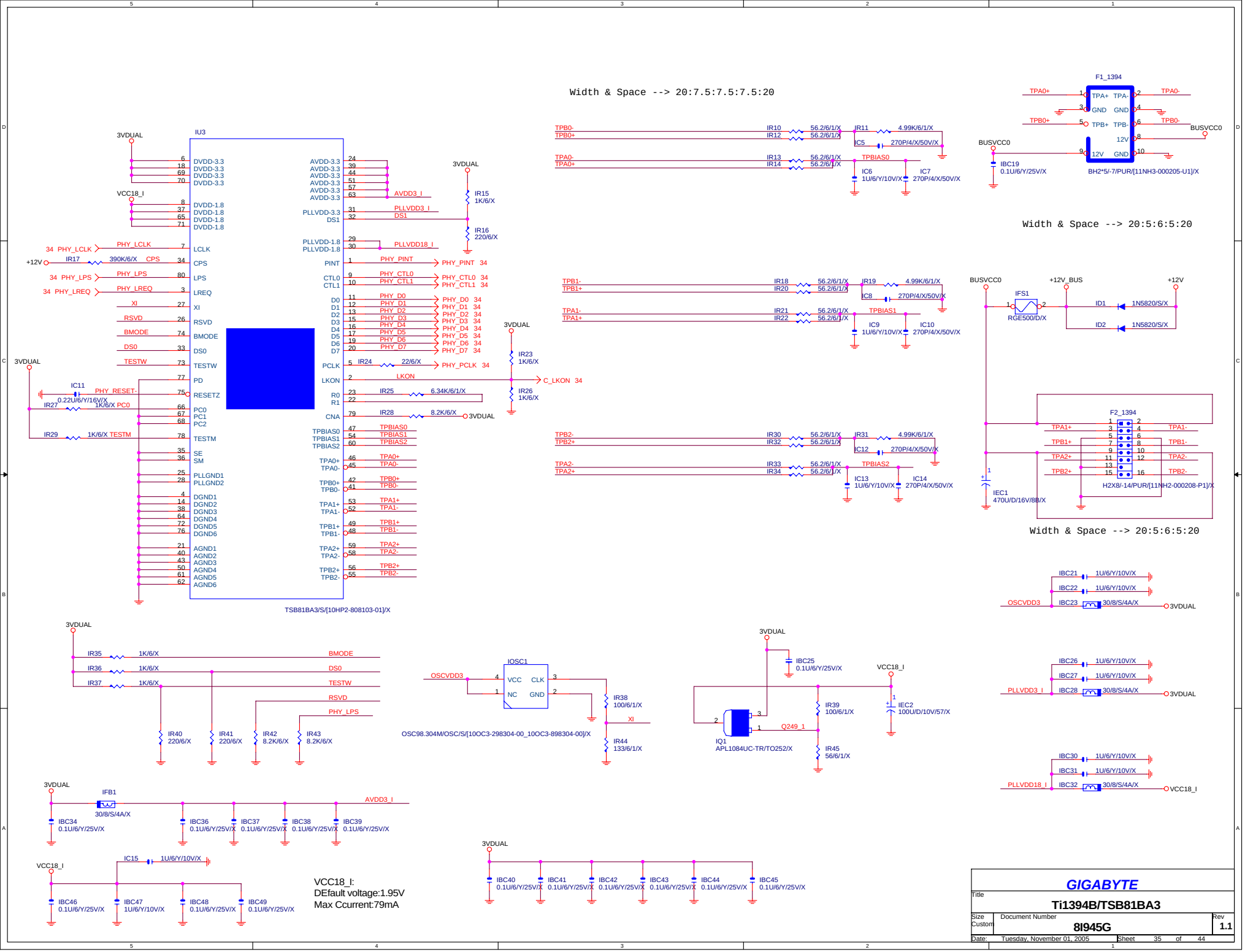
Width & Space --> 20:7.5:7.5:7.5:20
Width & Space --> 20:5:6:5:20
Width & Space --> 20:5:6:5:20
IU3
TSB81BA3/S/[10HP2-808103-01]/X
F1_1394
BH2*5/-7/PUR/[11NH3-000205-U1]/X
F2_1394
H2X8/-14/PUR/[11NH2-000208-P1]/X
IOSC1
OSC98.304M/OSC/S/[10OC3-298304-00_10OC3-898304-00]/X
IQ1
APL1084UC-TR/TO252/X
IFS1
RGE500/D/X
IEC1
470U/D/16V/88/X
IEC2
100U/D/10V/57/X
VCC18_I:
DEfault voltage:1.95V
Max Ccurrent:79mA
GIGABYTE
Title
Ti1394B/TSB81BA3
Size
Custom
Document Number
8I945G
Rev
1.1
Date:
Tuesday, November 01, 2005
Sheet
35
of
44

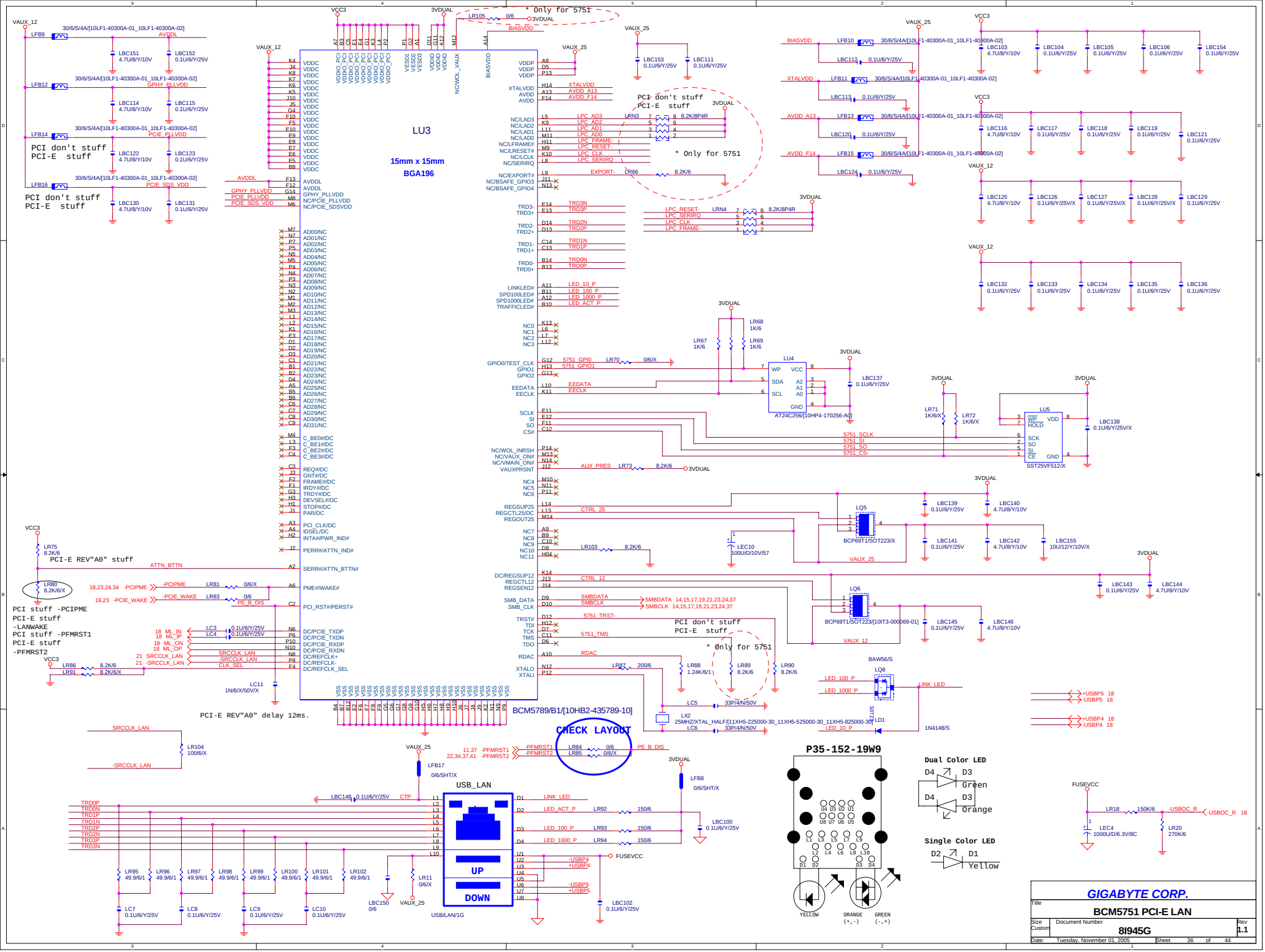
LU3
15mm x 15mm
BGA196
BCM5789/B1/[10HB2-435789-10]
PCI don't stuff
PCI-E stuff
* Only for 5751
PCI-E REV"A0" delay 12ms.
PCI stuff -PCIPME
PCI-E stuff
-LANWAKE
PCI stuff -PFMRST1
PCI-E stuff
-PFMRST2
CHECK LAYOUT
USB_LAN
UP
DOWN
USB/LAN/1G
P35-152-19W9
Dual Color LED
Green
Orange
Single Color LED
Yellow
YELLOW
ORANGE (+,-)
GREEN (-,+)
GIGABYTE CORP.
Title
BCM5751 PCI-E LAN
Size Custom
Document Number
8I945G
Rev 1.1
Date: Tuesday, November 01, 2005
Sheet 36 of 44

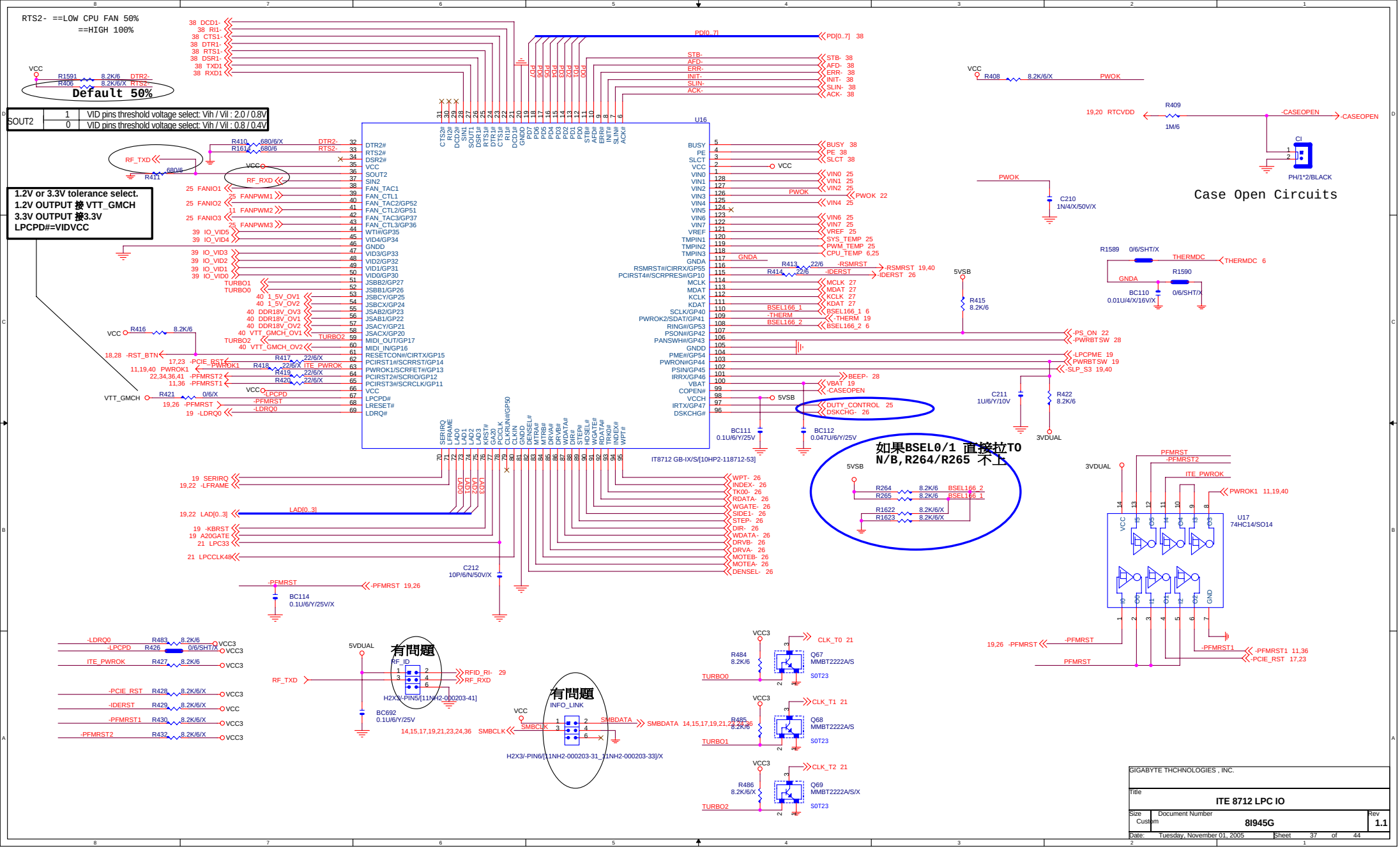

GIGABYTE TECHNOLOGIES , INC.		
Title	ITE 8712 LPC IO	
Size: Custom	Document Number: 8I945G	Rev: 1.1
Date: Tuesday, November 01, 2005	Sheet 37 of 44	

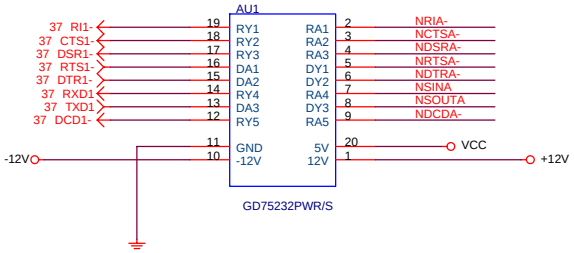

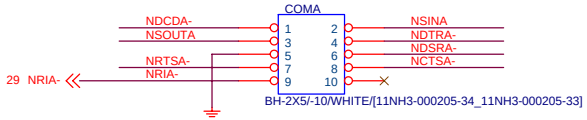

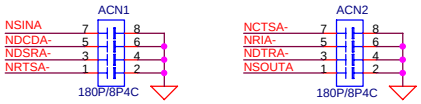

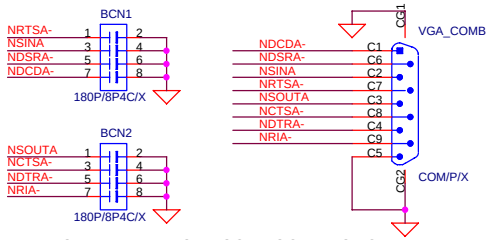

PLACE NEAR VGA_COM CONNECTOR

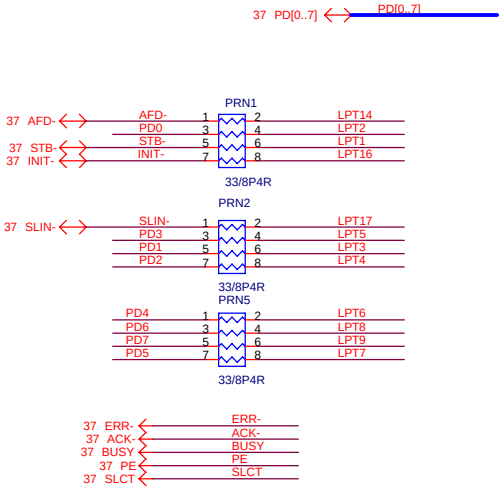

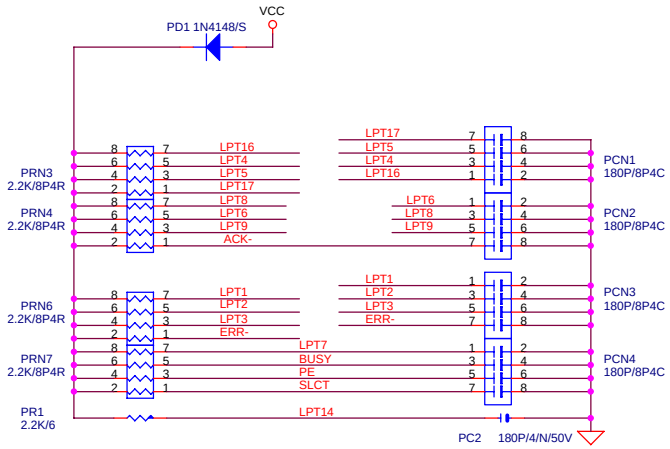

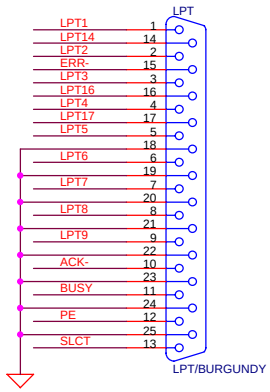

GIGABYTE THCHNOLOGIES , INC.		
Title	COM & IR & LPT PORT &FLOOPY	
Size B	Document Number 8I945G	Rev 1.1
Date: Tuesday, November 01, 2005	Sheet 38 of 44	

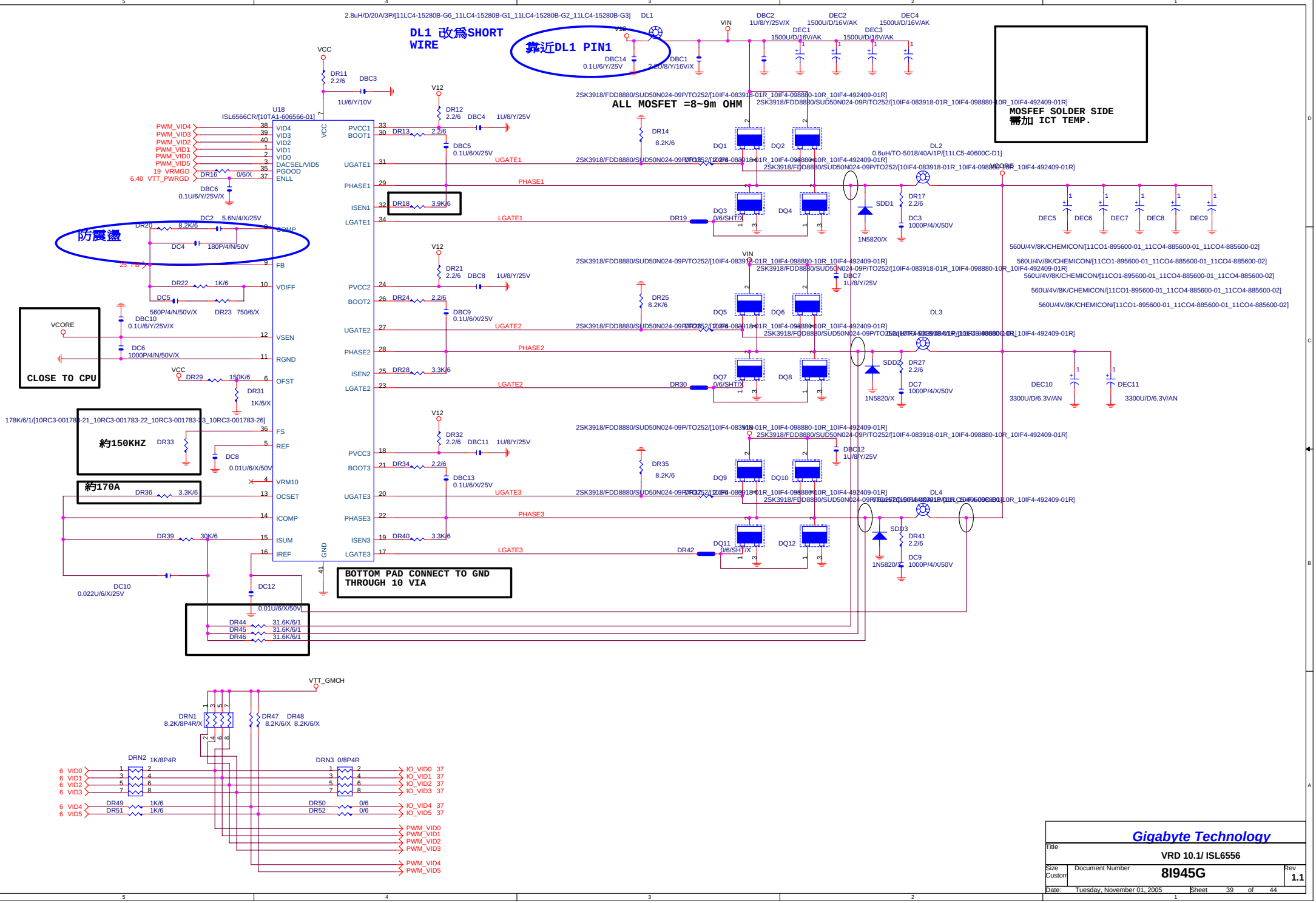

Gigabyte Technology	
Title	VRD 10.1/ ISL6556
Size Custom	Document Number 8I945G
Rev	1.1
Date: Tuesday, November 01, 2005	Sheet 39 of 44

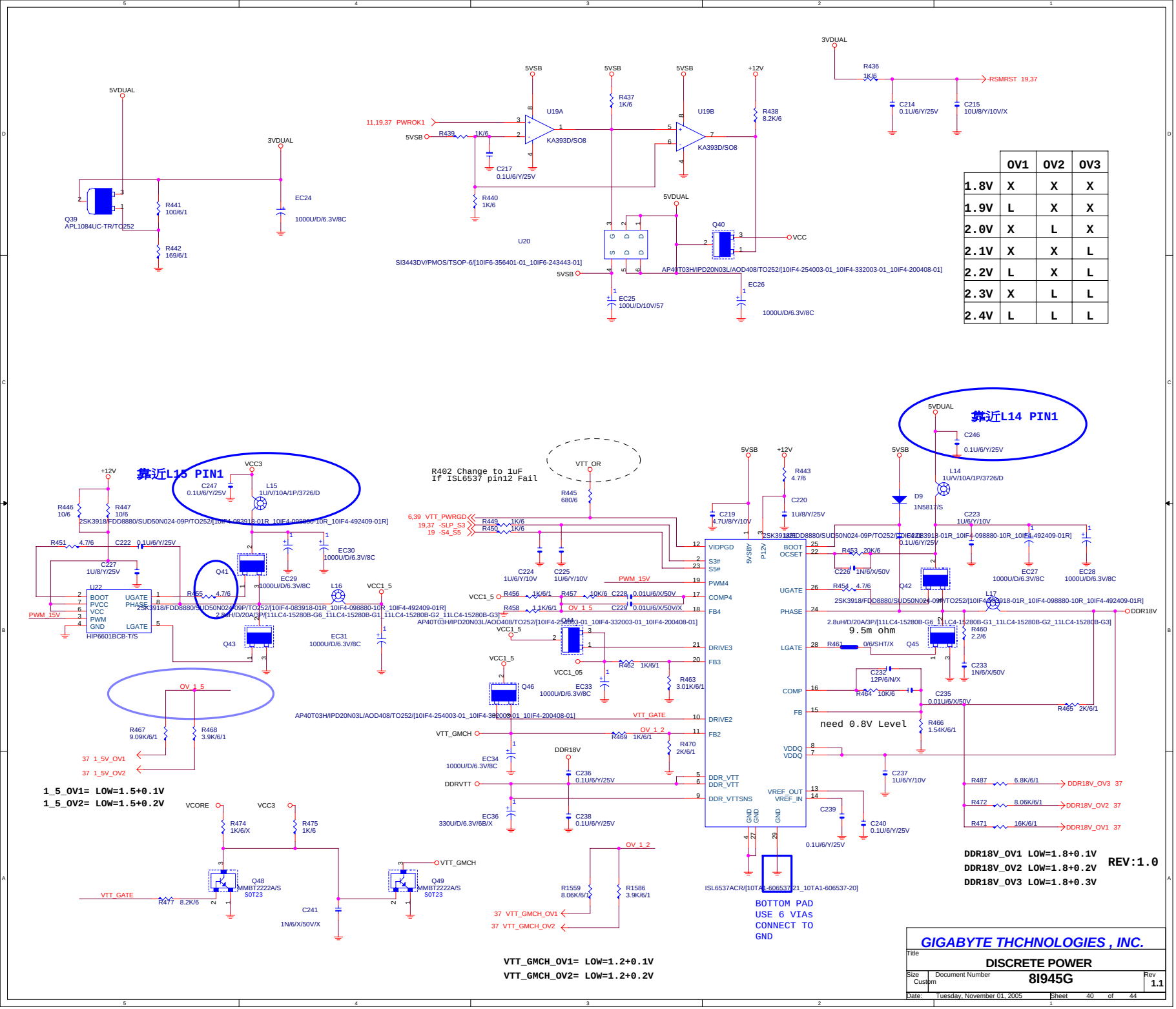

	0V1	0V2	0V3
1.8V	X	X	X
1.9V	L	X	X
2.0V	X	L	X
2.1V	X	X	L
2.2V	L	X	L
2.3V	X	L	L
2.4V	L	L	L

GIGABYTE THCHNOLOGIES , INC.

Title	DISCRETE POWER	
Size Custom	Document Number 8I945G	Rev 1.1
Date: Tuesday, November 01, 2005	Sheet 40 of 44	

ALL INPUT PIN MUST HAVE 0.1 CAPACITOR

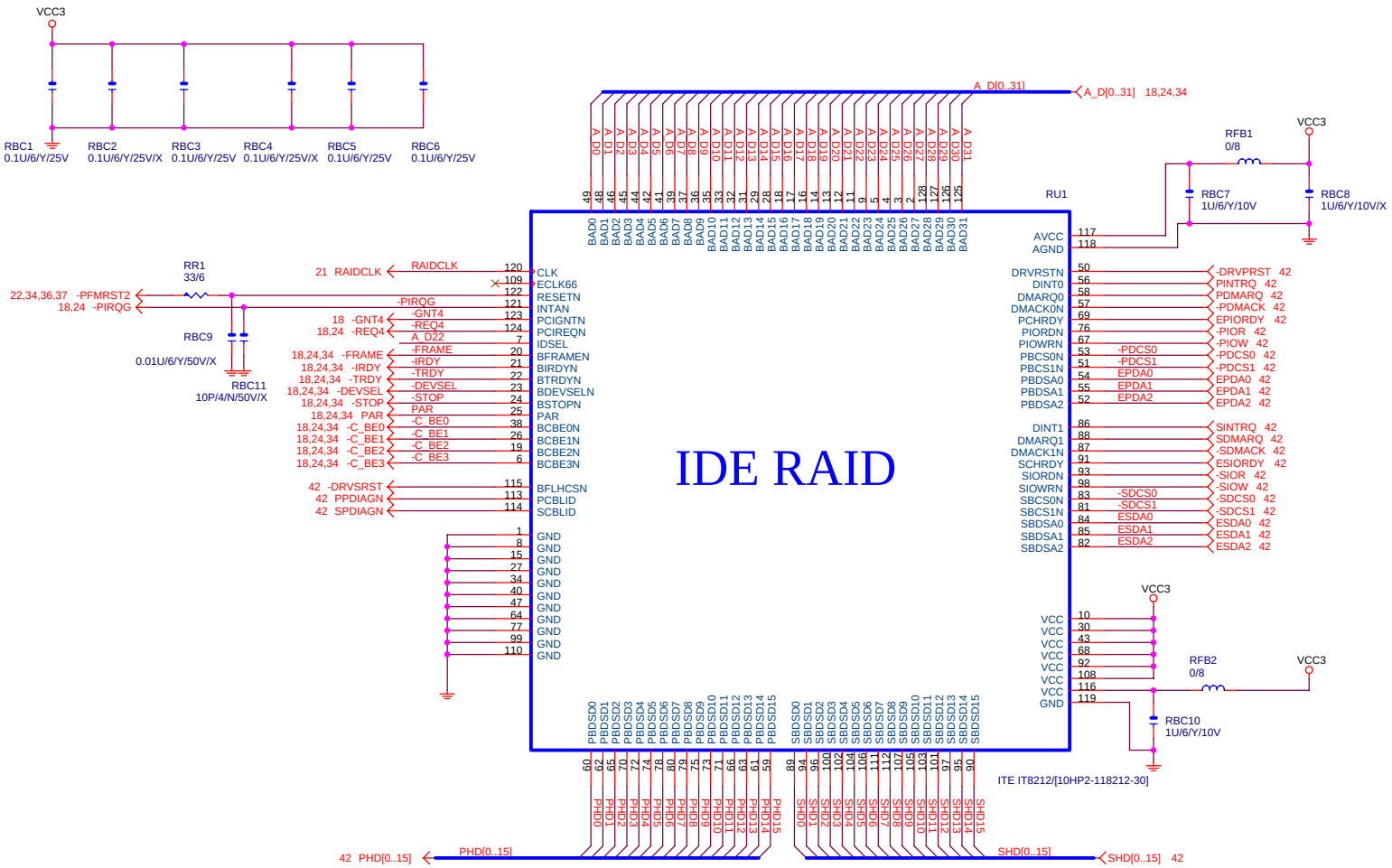

GIGABYTE		
Title	ATA100/133 & IDE RAID	
Size	Document Number 8I945G	Rev 1.1
Date: Tuesday, November 01, 2005	Sheet 41 of 44	

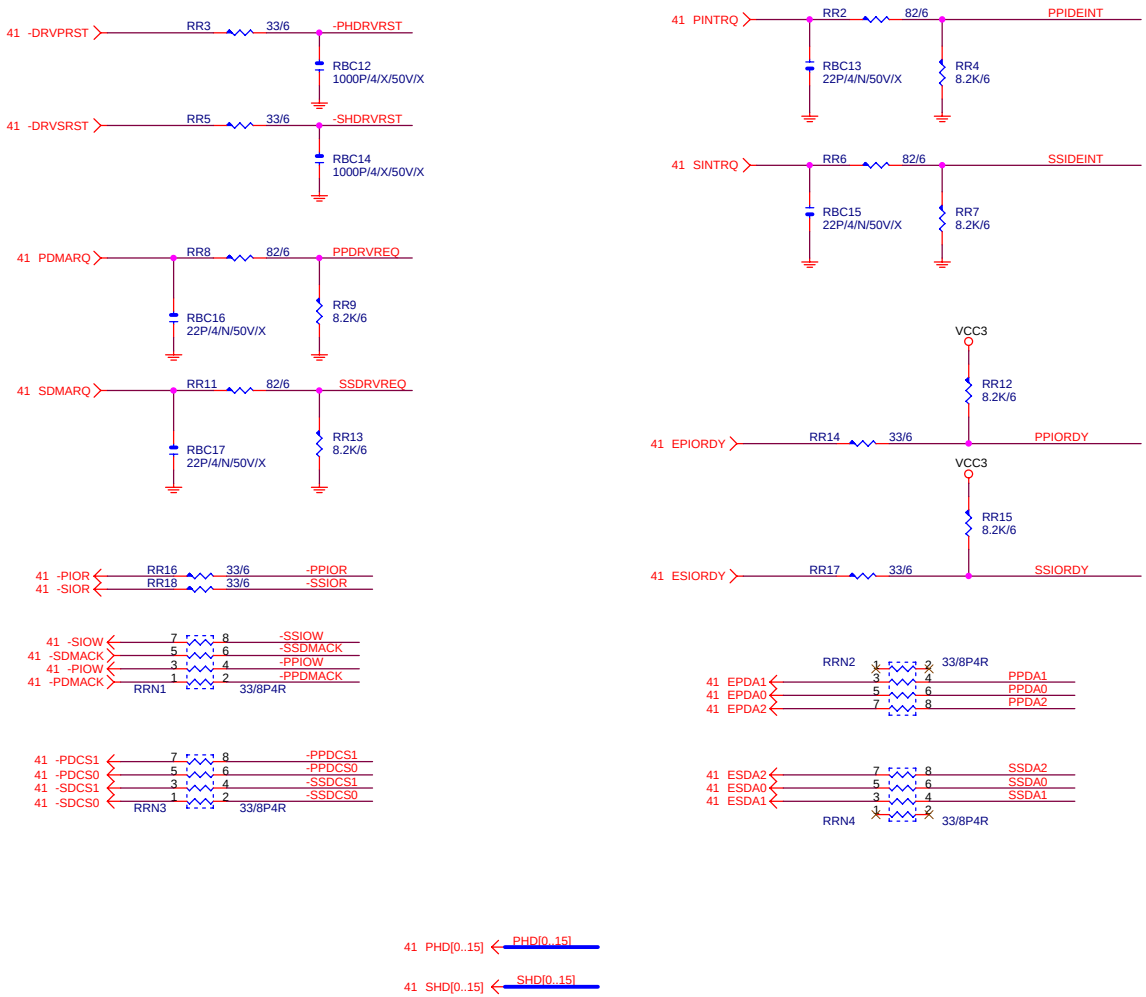

GIGABYTE

Title: ATA100/133 & IDE RAID

Size | Document Number: 8I945G | Rev: 1.1

Date: Tuesday, November 01, 2005 | Sheet 42 of 44

GPI26

INTEL ICH7 GPIO Implementation

紅字表示CPI/O 同PIN

GPI PIN

Pin Name	Pin Type	Power Well			GPIO Application
GPIO[0]	I/O	VCC3	GPI/BM_BUSY#	(NA)	(NA)
GPIO[1]	I/O	VCC	-REQ[5]	(P.U VCC)	-REQ[5]
GPIO[5:2]	I/OD	VCC	-PIRQ[H:E]	(P.U VCC)	-PIRQ[H:E]
GPIO[6]	I/O	VCC3	GPI	(NA)	M_ID0 FOR MEDIA
GPIO[7]	I/O	VCC3	GPI	(NA)	DUALBIOS_INPUT
GPIO[8]	I/O	3VDUAL	GPI	(P.U 3VDUAL)	-SKTOCC
GPIO[9]	I/O	3VDUAL	GPI	(NA)	P66DET
GPIO[10]	I/O	3VDUAL	GPI	(NA)	M_ID1 FOR MB_ID
GPIO[11]	I/O	3VDUAL	-SMBALERT	(P.U 3VDUAL)	-SMBALRT
GPIO[12]	I/O	3VDUAL	GPI	(NA)	M_ID2 FOR MB_ID
GPIO[13]	I/O	3VDUAL	GPI	(P.U 3VDUAL)	-LPCPME
GPIO[14]	I/O	3VDUAL	GPI	(NA)	M_ID3 FOR MB_ID
GPIO[15]	I/O	3VDUAL	GPI	(NA)	-ACZ_DET
GPIO[16]	I/O	VCC3	GPO	P.D 20K(INT.)	HW RESET
GPIO[17]	I/O	VCC3	GPO/-GNT[5]	(NA)	GPO/-GNT[5]
GPIO[18]	I/O	VCC3	GPO/toggle	(NA)	(NA)
GPIO[19]	I/O	VCC3	SATA1GP	(P.U VCC3)	SATA1GP
GPIO[20]	I/O	VCC3	GPO	(P.U VCC3)	TBL-
GPIO[21]	I/O	VCC3	SATA0GP	(P.U VCC3)	SATA0GP
GPIO[22]	I/O	VCC3	-REQ[4]	(P.U VCC)	-REQ[4]
GPIO[23]	I/O	VCC3	LDRQ1#	(NA)	(NA)
GPIO[24]	I/O	3VDUAL	GPO/reset not cleared	(NA)	(NA)
GPIO[25]	I/O	3VDUAL	GPO	(NA)	PWD_LED
GPIO[26]	I/O	3VDUAL	EL_RSVD	(P.D)	-SPI_WP
GPIO[27]	I/O	3VDUAL	EL_STATE0	(NA)	(NA)
GPIO[28]	I/O	3VDUAL	EL_STATE1	(NA)	(NA)
GPIO[29]	I/O	3VDUAL	OC5#	(P.U VCC 分壓))	OC5#
GPIO[30]	I/O	3VDUAL	OC6#	(P.U VCC 分壓))	OC6#
GPIO[31]	I/O	3VDUAL	OC7#	(P.U VCC 分壓))	OC7#
GPIO[32]	I/O	VCC3	GPO	(NA)	DUAL_BIOS
GPIO[33]	I/O	VCC3	GPO	(NA)	DUAL_BIOS
GPIO[34]	I/O	VCC3	GPO	(P.U VCC3)	FWP-
GPIO[35]	I/O	VCC3	SATACLKREQ#	(NA)	(NA)
GPIO[36]	I	VCC3	SATA2GP	(P.U VCC3)	SATA2GP
GPIO[37]	I	VCC3	SATA3GP	(P.U VCC3)	SATA3GP

GPO PIN

Pin Name	Pin Number	Power Well	Pin Type		GPIO Application
GPIO[38]	I/O	VCC3	GPI	(NA)	(NA)
GPIO[39]	I/O	VCC3	GPI	(NA)	(NA)
GPIO[40:47]		NOT IMPLEMENTED		NOT IMPLEMENTED	
GPIO[48]	I/O	VCC3	-GNT[4]	(NA)	-GNT[4]
GPIO[49]	I/O	VTT_GMCH	CPUPWRGD	(P.U VTT_OL)	CPUPWROK
PCI1	PCLK0	-PCIRST	-REQ0/-GNT0	-PIRQE	A_D16
PCI2	PCLK1	-PCIRST	-REQ1/-GNT1	-PIRQD	A_D17
PCI3	PCLK2	-PCIRST	-REQ2/-GNT2	-PIRQC	A_D18
1394b	1394CLK	-PFMRST2	-REQ3/-GNT3	-PIRQH	A_D23
IT8212	RAIDCLK	-PFMRST2	-REQ4/-GNT4	-PIRQG	A_D22

GIGABYTE

Title	GPIO TABLE	
Size: Custom	Document Number: 8I945G	Rev: 1.1
Date: Tuesday, November 01, 2005	Sheet 43 of 44	

ICH6 GPIO Table:

NAME	PWR LANE	USAGE	NAME	PWR LANE	USAGE
GPI0	V5REF	M/B ID (-REQ6)	GPI41	VCC3	M/B ID
GPI1	V5REF	-REQ5	GPO48	VCC3	-GNT4
GPI2	V5REF	-PIRQE	GPO49	V-CPUIO	CPUPWOK
GPI3	V5REF	-PIRQF			
GPI4	V5REF	-PIRQG			
GPI5	V5REF	-PIRQH			
GPI6	VCC3	-SLP_BTN			
GPI7	VCC3	DUAL BIOS			
GPI8	3VDAUL	-LANWAKE			
GPI9	3VDAUL	-USBOC4			
GPI10	3VDAUL	-USBOC5			
GPI11	3VDAUL	-SMBALT			
GPI12	VCC3	ATX_DET			
GPI13	3VDAUL	-LPCPME			
GPI14	3VDAUL	-USBOC6			
GPI15	3VDAUL	-USBOC7			
GPO16	VCC3	CPU OV1 (-GNT6)			
GPO17	VCC3	-GNT5			
GPO18	VCC3	CPU OV2			
GPO19	VCC3	DUAL BIOS			
GPO20	VCC3	BIOS T-BLOCK			
GPO21	VCC3	DUAL BIOS			
GPO23	VCC3	DDR OV0			
GPIO24	3VDAUL	GREEN LED			
GPIO25	3VDAUL	DDR OV1			
GPI26	VCC3	SATA_GP0			
GPIO27	3VDAUL	+PWRLED			
GPIO28	3VDAUL	-PWRLED			
GPI29	VCC3	SATA GP1			
GPI30	VCC3	SATA GP2			
GPI31	VCC3	SATA GP3			
GPIO32	VCC3	BIOS WP			
GPIO33	VCC3	AZALIA DET			
GPIO34	VCC3	PWRLED			
GPI40	V5REF	-REQ4			

PWROK/RESET Table:

ITE8712BHX PIN	NET NAME	TARGET
PIN62/-PCIRST1	-PCIE_RST	1. PCI-E * 1 Slot1 2. PCI-E * 1 Slot2 3. PCI-E * 1 Slot3 4. PCI-E * 16 Slot
PIN64/-PCIRST2	-PFMRST2	1. Onboard PCI Lan 2. Onboard 1394 Chip 3. OnBoard FWH
PIN65/-PCIRST3	-PFMRST1	1. Onboard PCI-E Lan 2. Onboard SATA Chip 3. GMCH
PIN115/-PCIRST4	-PFMRST_ -IDERST	Reserved For IDE
PIN63/PWROK1	PWROK1	1. GMCH 2. ICH6 3. 5VDUAL SWITCH 4. DPS CONTROL
PIN109/PWROK2	-THERM	1. ICH6

GIGABYTE THCHNOLOGIES , INC.

Title: GPIO/RESET TABLE

Size: Custom | Document Number: 8I945G | Rev: 1.1

Date: Tuesday, November 01, 2005 | Sheet 44 of 44