MS-16332 Ver:0A

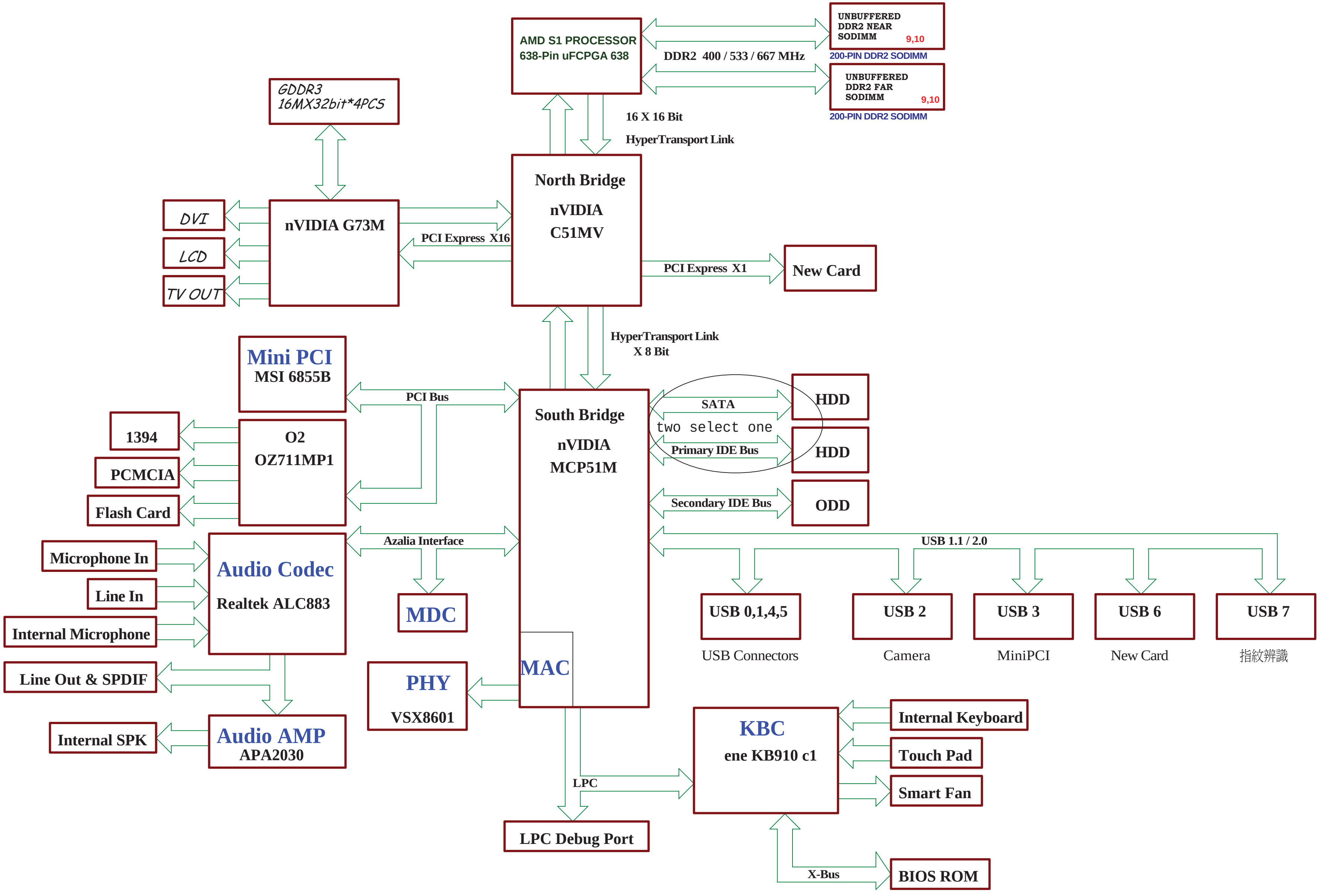
AMD S1 PROCESSOR
638-Pin uFCPGA 638
DDR2 400 / 533 / 667 MHz
UNBUFFERED
DDR2 NEAR
SODIMM
9,10
200-PIN DDR2 SODIMM
UNBUFFERED
DDR2 FAR
SODIMM
9,10
200-PIN DDR2 SODIMM
16 X 16 Bit
HyperTransport Link
GDDR3
16MX32bit*4PCS
DVI
LCD
TV OUT
nVIDIA G73M
PCI Express X16
North Bridge
nVIDIA
C51MV
PCI Express X1
New Card
HyperTransport Link
X 8 Bit
Mini PCI
MSI 6855B
PCI Bus
1394
PCMCIA
Flash Card
O2
OZ711MP1
South Bridge
nVIDIA
MCP51M
SATA
two select one
Primary IDE Bus
HDD
HDD
Secondary IDE Bus
ODD
Microphone In
Line In
Internal Microphone
Audio Codec
Realtek ALC883
Azalia Interface
MDC
USB 1.1 / 2.0
USB 0,1,4,5
USB Connectors
USB 2
Camera
USB 3
MiniPCI
USB 6
New Card
USB 7
指紋辨識
Line Out & SPDIF
PHY
VSX8601
MAC
Internal SPK
Audio AMP
APA2030
KBC
ene KB910 c1
Internal Keyboard
Touch Pad
Smart Fan
LPC
LPC Debug Port
X-Bus
BIOS ROM

MSI CORPORATION

Title
BLOCK DIAGRAM

Size C
Document Number MS-16332
Rev 0.A

Date: Monday, April 10, 2006
Sheet 1 of 40

PROCESSOR HYPERTRANSPORT INTERFACE

VLDT_Ax AND VLDT_Bx ARE CONNECTED TO THE LDT_RUN POWER SUPPLY THROUGH THE PACKAGE OR ON THE DIE. IT IS ONLY CONNECTED ON THE BOARD TO DECOUPLING NEAR THE CPU PACKAGE

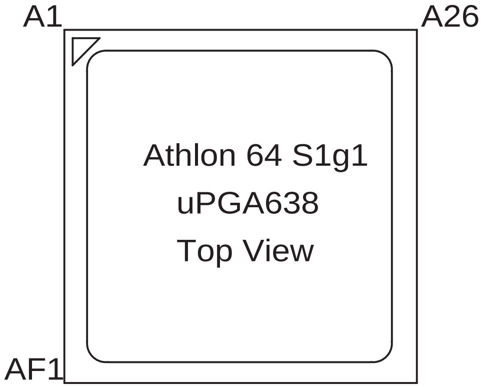
A1
A26
AF1
Athlon 64 S1g1
uPGA638
Top View

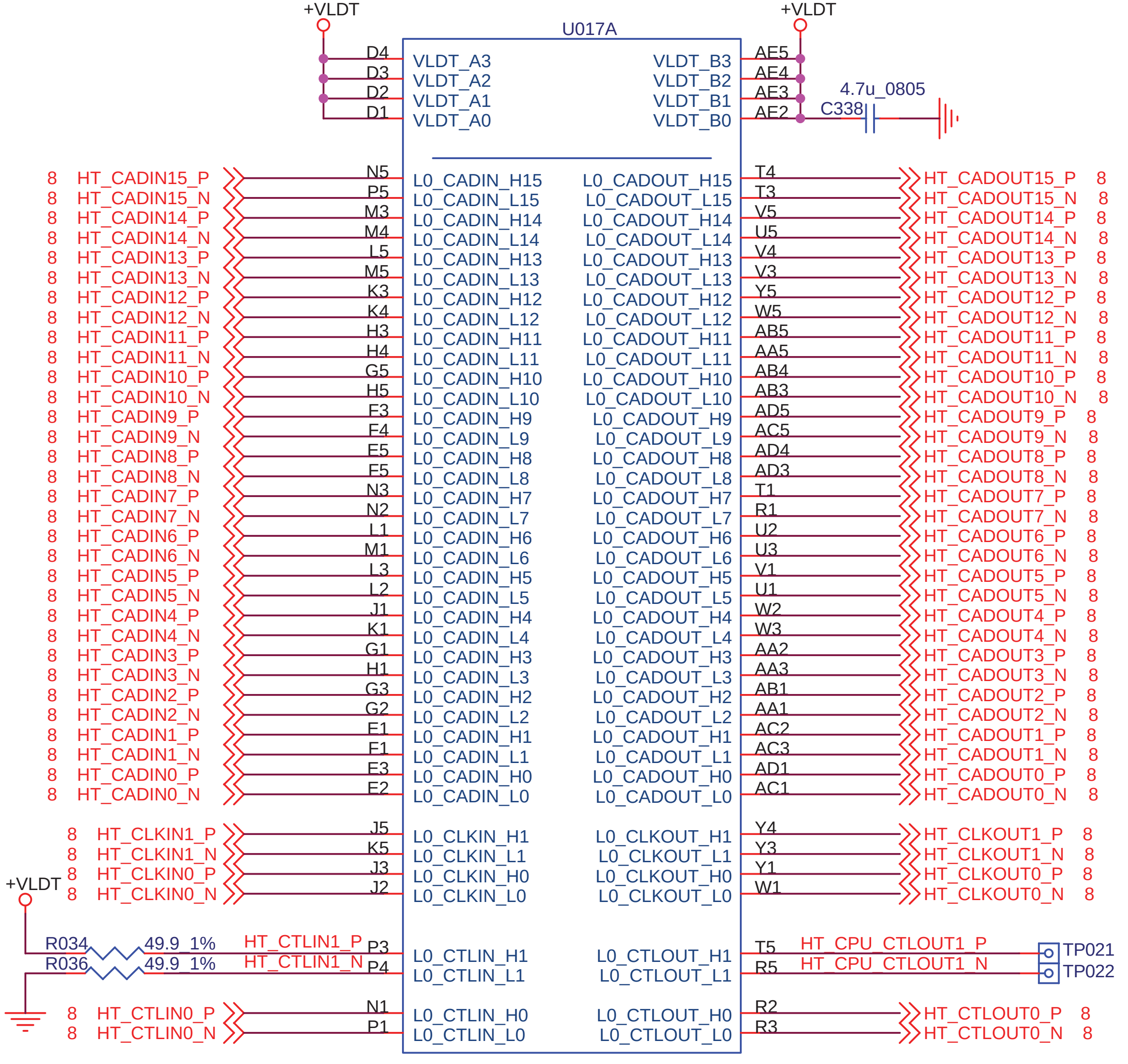
+VLDT
+VLDT
U017A
D4 VLDT_A3 VLDT_B3 AE5
D3 VLDT_A2 VLDT_B2 AE4
D2 VLDT_A1 VLDT_B1 AE3
D1 VLDT_A0 VLDT_B0 AE2
4.7u_0805
C338
8 HT_CADIN15_P N5 L0_CADIN_H15 L0_CADOUT_H15 T4 HT_CADOUT15_P 8
8 HT_CADIN15_N P5 L0_CADIN_L15 L0_CADOUT_L15 T3 HT_CADOUT15_N 8
8 HT_CADIN14_P M3 L0_CADIN_H14 L0_CADOUT_H14 V5 HT_CADOUT14_P 8
8 HT_CADIN14_N M4 L0_CADIN_L14 L0_CADOUT_L14 U5 HT_CADOUT14_N 8
8 HT_CADIN13_P L5 L0_CADIN_H13 L0_CADOUT_H13 V4 HT_CADOUT13_P 8
8 HT_CADIN13_N M5 L0_CADIN_L13 L0_CADOUT_L13 V3 HT_CADOUT13_N 8
8 HT_CADIN12_P K3 L0_CADIN_H12 L0_CADOUT_H12 Y5 HT_CADOUT12_P 8
8 HT_CADIN12_N K4 L0_CADIN_L12 L0_CADOUT_L12 W5 HT_CADOUT12_N 8
8 HT_CADIN11_P H3 L0_CADIN_H11 L0_CADOUT_H11 AB5 HT_CADOUT11_P 8
8 HT_CADIN11_N H4 L0_CADIN_L11 L0_CADOUT_L11 AA5 HT_CADOUT11_N 8
8 HT_CADIN10_P G5 L0_CADIN_H10 L0_CADOUT_H10 AB4 HT_CADOUT10_P 8
8 HT_CADIN10_N H5 L0_CADIN_L10 L0_CADOUT_L10 AB3 HT_CADOUT10_N 8
8 HT_CADIN9_P F3 L0_CADIN_H9 L0_CADOUT_H9 AD5 HT_CADOUT9_P 8
8 HT_CADIN9_N F4 L0_CADIN_L9 L0_CADOUT_L9 AC5 HT_CADOUT9_N 8
8 HT_CADIN8_P E5 L0_CADIN_H8 L0_CADOUT_H8 AD4 HT_CADOUT8_P 8
8 HT_CADIN8_N F5 L0_CADIN_L8 L0_CADOUT_L8 AD3 HT_CADOUT8_N 8
8 HT_CADIN7_P N3 L0_CADIN_H7 L0_CADOUT_H7 T1 HT_CADOUT7_P 8
8 HT_CADIN7_N N2 L0_CADIN_L7 L0_CADOUT_L7 R1 HT_CADOUT7_N 8
8 HT_CADIN6_P L1 L0_CADIN_H6 L0_CADOUT_H6 U2 HT_CADOUT6_P 8
8 HT_CADIN6_N M1 L0_CADIN_L6 L0_CADOUT_L6 U3 HT_CADOUT6_N 8
8 HT_CADIN5_P L3 L0_CADIN_H5 L0_CADOUT_H5 V1 HT_CADOUT5_P 8
8 HT_CADIN5_N L2 L0_CADIN_L5 L0_CADOUT_L5 U1 HT_CADOUT5_N 8
8 HT_CADIN4_P J1 L0_CADIN_H4 L0_CADOUT_H4 W2 HT_CADOUT4_P 8
8 HT_CADIN4_N K1 L0_CADIN_L4 L0_CADOUT_L4 W3 HT_CADOUT4_N 8
8 HT_CADIN3_P G1 L0_CADIN_H3 L0_CADOUT_H3 AA2 HT_CADOUT3_P 8
8 HT_CADIN3_N H1 L0_CADIN_L3 L0_CADOUT_L3 AA3 HT_CADOUT3_N 8
8 HT_CADIN2_P G3 L0_CADIN_H2 L0_CADOUT_H2 AB1 HT_CADOUT2_P 8
8 HT_CADIN2_N G2 L0_CADIN_L2 L0_CADOUT_L2 AA1 HT_CADOUT2_N 8
8 HT_CADIN1_P E1 L0_CADIN_H1 L0_CADOUT_H1 AC2 HT_CADOUT1_P 8
8 HT_CADIN1_N F1 L0_CADIN_L1 L0_CADOUT_L1 AC3 HT_CADOUT1_N 8
8 HT_CADIN0_P E3 L0_CADIN_H0 L0_CADOUT_H0 AD1 HT_CADOUT0_P 8
8 HT_CADIN0_N E2 L0_CADIN_L0 L0_CADOUT_L0 AC1 HT_CADOUT0_N 8
8 HT_CLKIN1_P J5 L0_CLKIN_H1 L0_CLKOUT_H1 Y4 HT_CLKOUT1_P 8
8 HT_CLKIN1_N K5 L0_CLKIN_L1 L0_CLKOUT_L1 Y3 HT_CLKOUT1_N 8
8 HT_CLKIN0_P J3 L0_CLKIN_H0 L0_CLKOUT_H0 Y1 HT_CLKOUT0_P 8
8 HT_CLKIN0_N J2 L0_CLKIN_L0 L0_CLKOUT_L0 W1 HT_CLKOUT0_N 8
+VLDT
R034 49.9_1% HT_CTLIN1_P P3 L0_CTLIN_H1 L0_CTLOUT_H1 T5 HT_CPU_CTLOUT1_P TP021
R036 49.9_1% HT_CTLIN1_N P4 L0_CTLIN_L1 L0_CTLOUT_L1 R5 HT_CPU_CTLOUT1_N TP022
8 HT_CTLIN0_P N1 L0_CTLIN_H0 L0_CTLOUT_H0 R2 HT_CTLOUT0_P 8
8 HT_CTLIN0_N P1 L0_CTLIN_L0 L0_CTLOUT_L0 R3 HT_CTLOUT0_N 8

Athlon 64 S1 Processor Socket

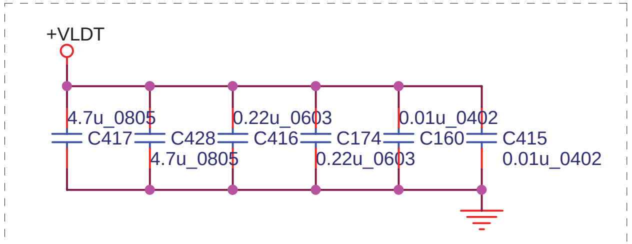
+VLDT
4.7u_0805
C417
C428
4.7u_0805
0.22u_0603
C416
C174
0.22u_0603
0.01u_0402
C160
C415
0.01u_0402

LAYOUT: Place bypass cap on topside of board

NEAR HT POWER PINS THAT ARE NOT CONNECTED DIRECTLY TO DOWNSTREAM HT DEVICE, BUT CONNECTED INTERNALLY TO OTHER HT POWER PINS
PLACE CLOSE TO VLDT0 POWER PINS

MSI CORPORATION

Title
AMD S1 HT I/F

Size: Custom
Document Number: **MS-16332**
Rev: 0A

Date: Monday, April 10, 2006
Sheet 2 of 40

Processor DDR2 Memory Interface

VDD_VTT_SUS_CPU IS CONNECTED TO THE VDD_VTT_SUS POWER SUPPLY THROUGH THE PACKAGE OR ON THE DIE. IT IS ONLY CONNECTED ON THE BOARD TO DECOUPLING NEAR THE CPU PACKAGE

CPU_M_VREF — 15MIL trace, 20MIL space, shorter than 1"

SNS_+0.9VTT — VTT_SENSE should be routed as a 10-mil trace with 10 mils spacing.

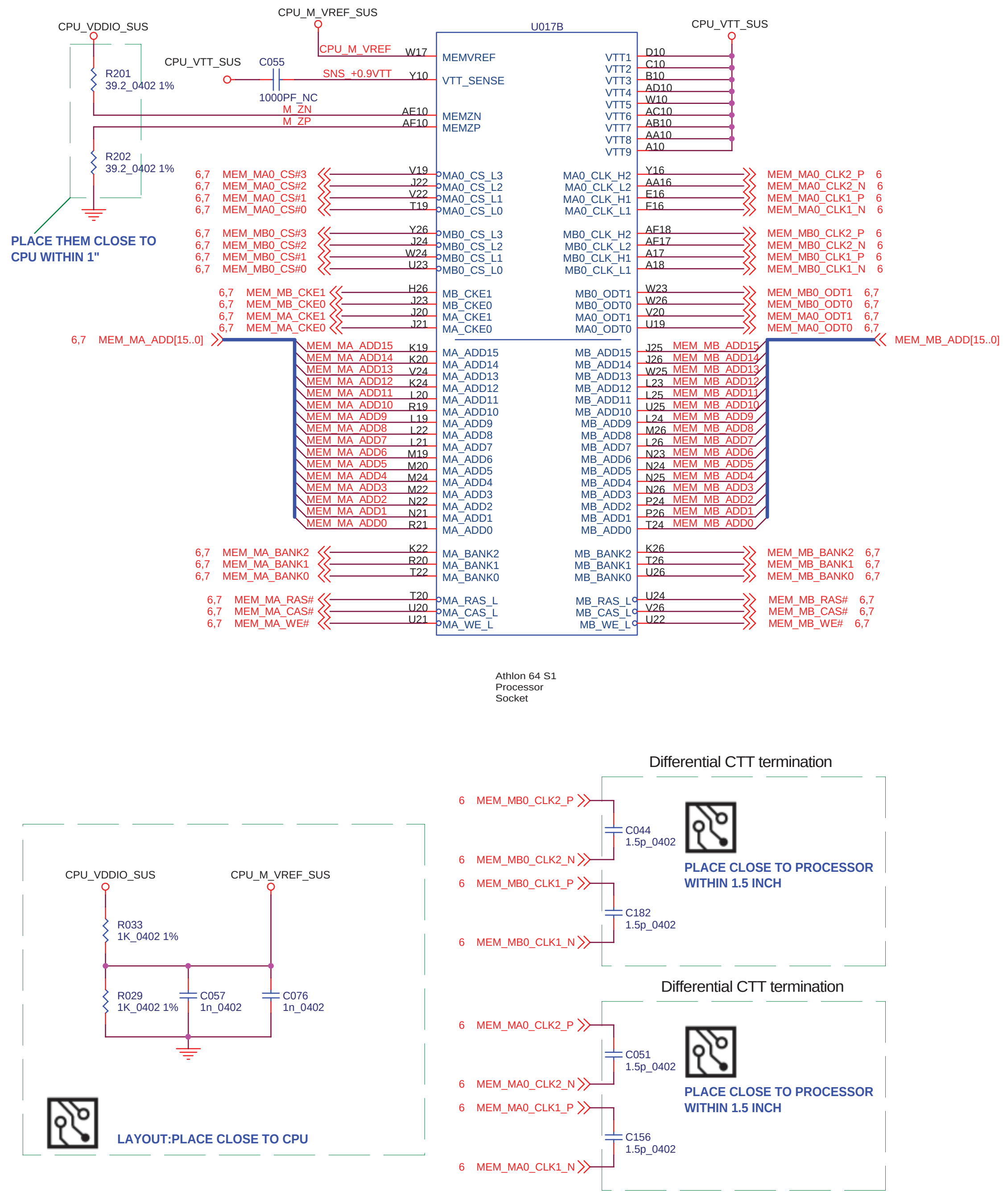

CPU_VDDIO_SUS
CPU_M_VREF_SUS
CPU_VTT_SUS
U017B
R201
39.2_0402 1%
R202
39.2_0402 1%
CPU_VTT_SUS
C055
1000PF_NC
CPU_M_VREF W17 MEMVREF
SNS_+0.9VTT Y10 VTT_SENSE
M_ZN AE10 MEMZN
M_ZP AF10 MEMZP
VTT1 D10
VTT2 C10
VTT3 B10
VTT4 AD10
VTT5 W10
VTT6 AC10
VTT7 AB10
VTT8 AA10
VTT9 A10
PLACE THEM CLOSE TO CPU WITHIN 1"
6,7 MEM_MA0_CS#3 V19 MA0_CS_L3
6,7 MEM_MA0_CS#2 J22 MA0_CS_L2
6,7 MEM_MA0_CS#1 V22 MA0_CS_L1
6,7 MEM_MA0_CS#0 T19 MA0_CS_L0
6,7 MEM_MB0_CS#3 Y26 MB0_CS_L3
6,7 MEM_MB0_CS#2 J24 MB0_CS_L2
6,7 MEM_MB0_CS#1 W24 MB0_CS_L1
6,7 MEM_MB0_CS#0 U23 MB0_CS_L0
6,7 MEM_MB_CKE1 H26 MB_CKE1
6,7 MEM_MB_CKE0 J23 MB_CKE0
6,7 MEM_MA_CKE1 J20 MA_CKE1
6,7 MEM_MA_CKE0 J21 MA_CKE0
MA0_CLK_H2 Y16 MEM_MA0_CLK2_P 6
MA0_CLK_L2 AA16 MEM_MA0_CLK2_N 6
MA0_CLK_H1 E16 MEM_MA0_CLK1_P 6
MA0_CLK_L1 F16 MEM_MA0_CLK1_N 6
MB0_CLK_H2 AF18 MEM_MB0_CLK2_P 6
MB0_CLK_L2 AF17 MEM_MB0_CLK2_N 6
MB0_CLK_H1 A17 MEM_MB0_CLK1_P 6
MB0_CLK_L1 A18 MEM_MB0_CLK1_N 6
MB0_ODT1 W23 MEM_MB0_ODT1 6,7
MB0_ODT0 W26 MEM_MB0_ODT0 6,7
MA0_ODT1 V20 MEM_MA0_ODT1 6,7
MA0_ODT0 U19 MEM_MA0_ODT0 6,7
6,7 MEM_MA_ADD[15..0]
MEM_MA_ADD15 K19 MA_ADD15
MEM_MA_ADD14 K20 MA_ADD14
MEM_MA_ADD13 V24 MA_ADD13
MEM_MA_ADD12 K24 MA_ADD12
MEM_MA_ADD11 L20 MA_ADD11
MEM_MA_ADD10 R19 MA_ADD10
MEM_MA_ADD9 L19 MA_ADD9
MEM_MA_ADD8 L22 MA_ADD8
MEM_MA_ADD7 L21 MA_ADD7
MEM_MA_ADD6 M19 MA_ADD6
MEM_MA_ADD5 M20 MA_ADD5
MEM_MA_ADD4 M24 MA_ADD4
MEM_MA_ADD3 M22 MA_ADD3
MEM_MA_ADD2 N22 MA_ADD2
MEM_MA_ADD1 N21 MA_ADD1
MEM_MA_ADD0 R21 MA_ADD0
MEM_MB_ADD[15..0] 6,7
MB_ADD15 J25 MEM_MB_ADD15
MB_ADD14 J26 MEM_MB_ADD14
MB_ADD13 W25 MEM_MB_ADD13
MB_ADD12 L23 MEM_MB_ADD12
MB_ADD11 L25 MEM_MB_ADD11
MB_ADD10 U25 MEM_MB_ADD10
MB_ADD9 L24 MEM_MB_ADD9
MB_ADD8 M26 MEM_MB_ADD8
MB_ADD7 L26 MEM_MB_ADD7
MB_ADD6 N23 MEM_MB_ADD6
MB_ADD5 N24 MEM_MB_ADD5
MB_ADD4 N25 MEM_MB_ADD4
MB_ADD3 N26 MEM_MB_ADD3
MB_ADD2 P24 MEM_MB_ADD2
MB_ADD1 P26 MEM_MB_ADD1
MB_ADD0 T24 MEM_MB_ADD0
6,7 MEM_MA_BANK2 K22 MA_BANK2
6,7 MEM_MA_BANK1 R20 MA_BANK1
6,7 MEM_MA_BANK0 T22 MA_BANK0
MB_BANK2 K26 MEM_MB_BANK2 6,7
MB_BANK1 T26 MEM_MB_BANK1 6,7
MB_BANK0 U26 MEM_MB_BANK0 6,7
6,7 MEM_MA_RAS# T20 MA_RAS_L
6,7 MEM_MA_CAS# U20 MA_CAS_L
6,7 MEM_MA_WE# U21 MA_WE_L
MB_RAS_L U24 MEM_MB_RAS# 6,7
MB_CAS_L V26 MEM_MB_CAS# 6,7
MB_WE_L U22 MEM_MB_WE# 6,7
Athlon 64 S1 Processor Socket
Differential CTT termination
6 MEM_MB0_CLK2_P
C044 1.5p_0402
6 MEM_MB0_CLK2_N
6 MEM_MB0_CLK1_P
C182 1.5p_0402
6 MEM_MB0_CLK1_N
PLACE CLOSE TO PROCESSOR WITHIN 1.5 INCH
Differential CTT termination
6 MEM_MA0_CLK2_P
C051 1.5p_0402
6 MEM_MA0_CLK2_N
6 MEM_MA0_CLK1_P
C156 1.5p_0402
6 MEM_MA0_CLK1_N
PLACE CLOSE TO PROCESSOR WITHIN 1.5 INCH
CPU_VDDIO_SUS
CPU_M_VREF_SUS
R033 1K_0402 1%
R029 1K_0402 1%
C057 1n_0402
C076 1n_0402
LAYOUT:PLACE CLOSE TO CPU

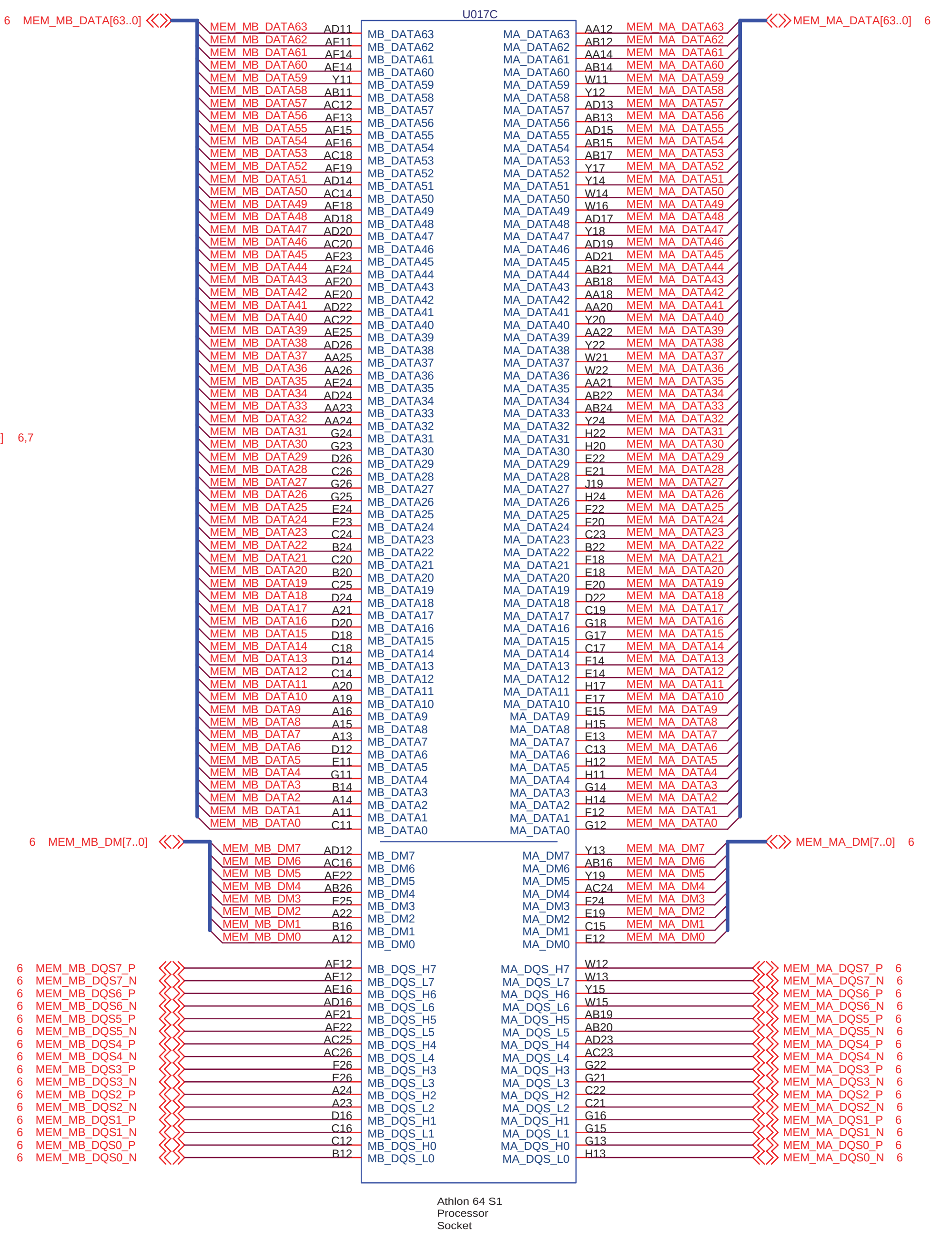

U017C
6 MEM_MB_DATA[63..0]
MEM_MA_DATA[63..0] 6
MEM_MB_DATA63 AD11 MB_DATA63 / MA_DATA63 AA12 MEM_MA_DATA63
MEM_MB_DATA62 AF11 MB_DATA62 / MA_DATA62 AB12 MEM_MA_DATA62
MEM_MB_DATA61 AF14 MB_DATA61 / MA_DATA61 AA14 MEM_MA_DATA61
MEM_MB_DATA60 AE14 MB_DATA60 / MA_DATA60 AB14 MEM_MA_DATA60
MEM_MB_DATA59 Y11 MB_DATA59 / MA_DATA59 W11 MEM_MA_DATA59
MEM_MB_DATA58 AB11 MB_DATA58 / MA_DATA58 Y12 MEM_MA_DATA58
MEM_MB_DATA57 AC12 MB_DATA57 / MA_DATA57 AD13 MEM_MA_DATA57
MEM_MB_DATA56 AF13 MB_DATA56 / MA_DATA56 AB13 MEM_MA_DATA56
MEM_MB_DATA55 AF15 MB_DATA55 / MA_DATA55 AD15 MEM_MA_DATA55
MEM_MB_DATA54 AF16 MB_DATA54 / MA_DATA54 AB15 MEM_MA_DATA54
MEM_MB_DATA53 AC18 MB_DATA53 / MA_DATA53 AB17 MEM_MA_DATA53
MEM_MB_DATA52 AF19 MB_DATA52 / MA_DATA52 Y17 MEM_MA_DATA52
MEM_MB_DATA51 AD14 MB_DATA51 / MA_DATA51 Y14 MEM_MA_DATA51
MEM_MB_DATA50 AC14 MB_DATA50 / MA_DATA50 W14 MEM_MA_DATA50
MEM_MB_DATA49 AF18 MB_DATA49 / MA_DATA49 W16 MEM_MA_DATA49
MEM_MB_DATA48 AD18 MB_DATA48 / MA_DATA48 AD17 MEM_MA_DATA48
MEM_MB_DATA47 AD20 MB_DATA47 / MA_DATA47 Y18 MEM_MA_DATA47
MEM_MB_DATA46 AC20 MB_DATA46 / MA_DATA46 AD19 MEM_MA_DATA46
MEM_MB_DATA45 AF23 MB_DATA45 / MA_DATA45 AD21 MEM_MA_DATA45
MEM_MB_DATA44 AF24 MB_DATA44 / MA_DATA44 AB21 MEM_MA_DATA44
MEM_MB_DATA43 AF20 MB_DATA43 / MA_DATA43 AB18 MEM_MA_DATA43
MEM_MB_DATA42 AE20 MB_DATA42 / MA_DATA42 AA18 MEM_MA_DATA42
MEM_MB_DATA41 AD22 MB_DATA41 / MA_DATA41 AA20 MEM_MA_DATA41
MEM_MB_DATA40 AC22 MB_DATA40 / MA_DATA40 Y20 MEM_MA_DATA40
MEM_MB_DATA39 AE25 MB_DATA39 / MA_DATA39 AA22 MEM_MA_DATA39
MEM_MB_DATA38 AD26 MB_DATA38 / MA_DATA38 Y22 MEM_MA_DATA38
MEM_MB_DATA37 AA25 MB_DATA37 / MA_DATA37 W21 MEM_MA_DATA37
MEM_MB_DATA36 AA26 MB_DATA36 / MA_DATA36 W22 MEM_MA_DATA36
MEM_MB_DATA35 AE24 MB_DATA35 / MA_DATA35 AA21 MEM_MA_DATA35
MEM_MB_DATA34 AD24 MB_DATA34 / MA_DATA34 AB22 MEM_MA_DATA34
MEM_MB_DATA33 AA23 MB_DATA33 / MA_DATA33 AB24 MEM_MA_DATA33
MEM_MB_DATA32 AA24 MB_DATA32 / MA_DATA32 Y24 MEM_MA_DATA32
MEM_MB_DATA31 G24 MB_DATA31 / MA_DATA31 H22 MEM_MA_DATA31
MEM_MB_DATA30 G23 MB_DATA30 / MA_DATA30 H20 MEM_MA_DATA30
MEM_MB_DATA29 D26 MB_DATA29 / MA_DATA29 E22 MEM_MA_DATA29
MEM_MB_DATA28 C26 MB_DATA28 / MA_DATA28 E21 MEM_MA_DATA28
MEM_MB_DATA27 G26 MB_DATA27 / MA_DATA27 J19 MEM_MA_DATA27
MEM_MB_DATA26 G25 MB_DATA26 / MA_DATA26 H24 MEM_MA_DATA26
MEM_MB_DATA25 E24 MB_DATA25 / MA_DATA25 F22 MEM_MA_DATA25
MEM_MB_DATA24 F23 MB_DATA24 / MA_DATA24 F20 MEM_MA_DATA24
MEM_MB_DATA23 C24 MB_DATA23 / MA_DATA23 C23 MEM_MA_DATA23
MEM_MB_DATA22 B24 MB_DATA22 / MA_DATA22 B22 MEM_MA_DATA22
MEM_MB_DATA21 C20 MB_DATA21 / MA_DATA21 F18 MEM_MA_DATA21
MEM_MB_DATA20 B20 MB_DATA20 / MA_DATA20 E18 MEM_MA_DATA20
MEM_MB_DATA19 C25 MB_DATA19 / MA_DATA19 E20 MEM_MA_DATA19
MEM_MB_DATA18 D24 MB_DATA18 / MA_DATA18 D22 MEM_MA_DATA18
MEM_MB_DATA17 A21 MB_DATA17 / MA_DATA17 C19 MEM_MA_DATA17
MEM_MB_DATA16 D20 MB_DATA16 / MA_DATA16 G18 MEM_MA_DATA16
MEM_MB_DATA15 D18 MB_DATA15 / MA_DATA15 G17 MEM_MA_DATA15
MEM_MB_DATA14 C18 MB_DATA14 / MA_DATA14 C17 MEM_MA_DATA14
MEM_MB_DATA13 D14 MB_DATA13 / MA_DATA13 F14 MEM_MA_DATA13
MEM_MB_DATA12 C14 MB_DATA12 / MA_DATA12 E14 MEM_MA_DATA12
MEM_MB_DATA11 A20 MB_DATA11 / MA_DATA11 H17 MEM_MA_DATA11
MEM_MB_DATA10 A19 MB_DATA10 / MA_DATA10 E17 MEM_MA_DATA10
MEM_MB_DATA9 A16 MB_DATA9 / MA_DATA9 F15 MEM_MA_DATA9
MEM_MB_DATA8 A15 MB_DATA8 / MA_DATA8 H15 MEM_MA_DATA8
MEM_MB_DATA7 A13 MB_DATA7 / MA_DATA7 E13 MEM_MA_DATA7
MEM_MB_DATA6 D12 MB_DATA6 / MA_DATA6 C13 MEM_MA_DATA6
MEM_MB_DATA5 E11 MB_DATA5 / MA_DATA5 H12 MEM_MA_DATA5
MEM_MB_DATA4 G11 MB_DATA4 / MA_DATA4 H11 MEM_MA_DATA4
MEM_MB_DATA3 B14 MB_DATA3 / MA_DATA3 G14 MEM_MA_DATA3
MEM_MB_DATA2 A14 MB_DATA2 / MA_DATA2 H14 MEM_MA_DATA2
MEM_MB_DATA1 A11 MB_DATA1 / MA_DATA1 F12 MEM_MA_DATA1
MEM_MB_DATA0 C11 MB_DATA0 / MA_DATA0 G12 MEM_MA_DATA0
6 MEM_MB_DM[7..0]
MEM_MA_DM[7..0] 6
MEM_MB_DM7 AD12 MB_DM7 / MA_DM7 Y13 MEM_MA_DM7
MEM_MB_DM6 AC16 MB_DM6 / MA_DM6 AB16 MEM_MA_DM6
MEM_MB_DM5 AE22 MB_DM5 / MA_DM5 Y19 MEM_MA_DM5
MEM_MB_DM4 AB26 MB_DM4 / MA_DM4 AC24 MEM_MA_DM4
MEM_MB_DM3 E25 MB_DM3 / MA_DM3 F24 MEM_MA_DM3
MEM_MB_DM2 A22 MB_DM2 / MA_DM2 E19 MEM_MA_DM2
MEM_MB_DM1 B16 MB_DM1 / MA_DM1 C15 MEM_MA_DM1
MEM_MB_DM0 A12 MB_DM0 / MA_DM0 E12 MEM_MA_DM0
6 MEM_MB_DQS7_P AF12 MB_DQS_H7 / MA_DQS_H7 W12 MEM_MA_DQS7_P 6
6 MEM_MB_DQS7_N AE12 MB_DQS_L7 / MA_DQS_L7 W13 MEM_MA_DQS7_N 6
6 MEM_MB_DQS6_P AF16 MB_DQS_H6 / MA_DQS_H6 Y15 MEM_MA_DQS6_P 6
6 MEM_MB_DQS6_N AE16 MB_DQS_L6 / MA_DQS_L6 W15 MEM_MA_DQS6_N 6
6 MEM_MB_DQS5_P AF21 MB_DQS_H5 / MA_DQS_H5 AB19 MEM_MA_DQS5_P 6
6 MEM_MB_DQS5_N AF22 MB_DQS_L5 / MA_DQS_L5 AB20 MEM_MA_DQS5_N 6
6 MEM_MB_DQS4_P AC25 MB_DQS_H4 / MA_DQS_H4 AD23 MEM_MA_DQS4_P 6
6 MEM_MB_DQS4_N AC26 MB_DQS_L4 / MA_DQS_L4 AC23 MEM_MA_DQS4_N 6
6 MEM_MB_DQS3_P F26 MB_DQS_H3 / MA_DQS_H3 G22 MEM_MA_DQS3_P 6
6 MEM_MB_DQS3_N E26 MB_DQS_L3 / MA_DQS_L3 G21 MEM_MA_DQS3_N 6
6 MEM_MB_DQS2_P A24 MB_DQS_H2 / MA_DQS_H2 C22 MEM_MA_DQS2_P 6
6 MEM_MB_DQS2_N A23 MB_DQS_L2 / MA_DQS_L2 C21 MEM_MA_DQS2_N 6
6 MEM_MB_DQS1_P D16 MB_DQS_H1 / MA_DQS_H1 G16 MEM_MA_DQS1_P 6
6 MEM_MB_DQS1_N C16 MB_DQS_L1 / MA_DQS_L1 G15 MEM_MA_DQS1_N 6
6 MEM_MB_DQS0_P C12 MB_DQS_H0 / MA_DQS_H0 G13 MEM_MA_DQS0_P 6
6 MEM_MB_DQS0_N B12 MB_DQS_L0 / MA_DQS_L0 H13 MEM_MA_DQS0_N 6
Athlon 64 S1 Processor Socket

MSI CORPORATION

Title
AMD S1 HT I/F

Size: Custom
Document Number: **MS-16332**
Rev: 0A
Date: Monday, April 10, 2006
Sheet 3 of 40

ATHLON Control and Debug

LAYOUT: ROUTE VDDA TRACE APPROX. 50 mils WIDE (USE 2x25 mil TRACES TO EXIT BALL FIELD) AND 500 mils LONG.

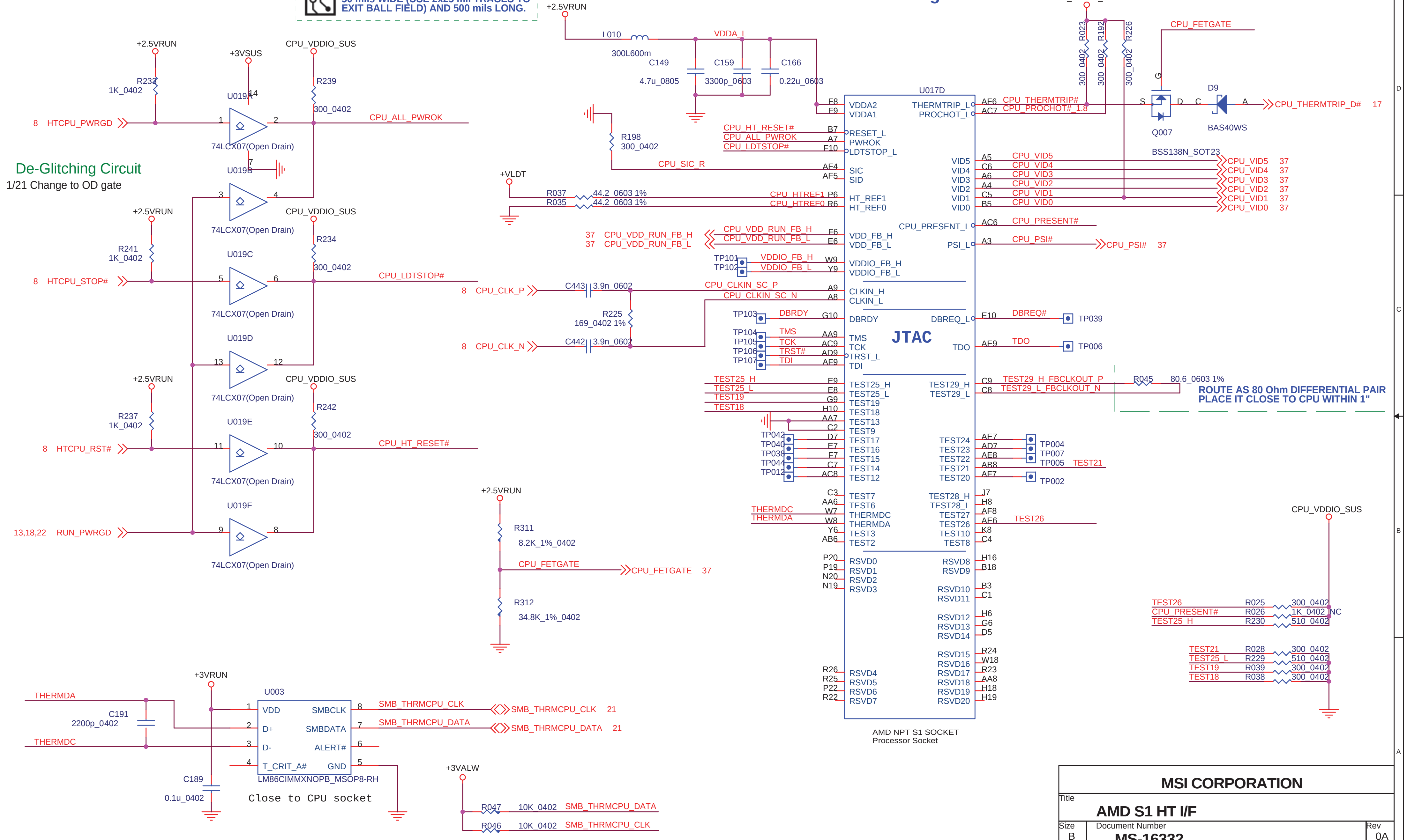

De-Glitching Circuit
1/21 Change to OD gate
+2.5VRUN
+3VSUS
CPU_VDDIO_SUS
R232 1K_0402
R239 300_0402
U019A
74LCX07(Open Drain)
8 HTCPU_PWRGD
CPU_ALL_PWROK
U019B
R241 1K_0402
R234 300_0402
U019C
8 HTCPU_STOP#
CPU_LDTSTOP#
U019D
R237 1K_0402
R242 300_0402
U019E
8 HTCPU_RST#
CPU_HT_RESET#
U019F
13,18,22 RUN_PWRGD
+2.5VRUN
L010 300L600m
VDDA_L
C149 4.7u_0805
C159 3300p_0603
C166 0.22u_0603
R198 300_0402
CPU_SIC_R
+VLDT
R037 44.2_0603 1%
R035 44.2_0603 1%
CPU_HTREF1
CPU_HTREF0
37 CPU_VDD_RUN_FB_H
37 CPU_VDD_RUN_FB_L
TP101 TP102 VDDIO_FB_H VDDIO_FB_L
8 CPU_CLK_P
8 CPU_CLK_N
C443 3.9n_0602
C442 3.9n_0602
R225 169_0402 1%
CPU_CLKIN_SC_P
CPU_CLKIN_SC_N
TP103 DBRDY
TP104 TP105 TP106 TP107 TMS TCK TRST# TDI
TEST25_H TEST25_L TEST19 TEST18
TP042 TP040 TP038 TP044 TP012
THERMDC THERMDA
U017D
VDDA2 VDDA1 RESET_L PWROK LDTSTOP_L SIC SID HT_REF1 HT_REF0 VDD_FB_H VDD_FB_L VDDIO_FB_H VDDIO_FB_L CLKIN_H CLKIN_L DBRDY TMS TCK TRST_L TDI
TEST25_H TEST25_L TEST19 TEST18 TEST13 TEST9 TEST17 TEST16 TEST15 TEST14 TEST12 TEST7 TEST6 THERMDC THERMDA TEST3 TEST2
RSVD0 RSVD1 RSVD2 RSVD3 RSVD4 RSVD5 RSVD6 RSVD7
THERMTRIP_L PROCHOT_L VID5 VID4 VID3 VID2 VID1 VID0 CPU_PRESENT_L PSI_L DBREQ_L TDO
TEST29_H TEST29_L TEST24 TEST23 TEST22 TEST21 TEST20 TEST28_H TEST28_L TEST27 TEST26 TEST10 TEST8
RSVD8 RSVD9 RSVD10 RSVD11 RSVD12 RSVD13 RSVD14 RSVD15 RSVD16 RSVD17 RSVD18 RSVD19 RSVD20
JTAC
AMD NPT S1 SOCKET
Processor Socket
CPU_VDDIO_SUS
R023 300_0402
R192 300_0402
R226 300_0402
CPU_FETGATE
CPU_THERMTRIP#
CPU_PROCHOT#_1.8
Q007 BSS138N_SOT23
D9 BAS40WS
CPU_THERMTRIP_D# 17
CPU_VID5 37
CPU_VID4 37
CPU_VID3 37
CPU_VID2 37
CPU_VID1 37
CPU_VID0 37
CPU_PRESENT#
CPU_PSI# 37
DBREQ# TP039
TDO TP006
TEST29_H_FBCLKOUT_P
TEST29_L_FBCLKOUT_N
R045 80.6_0603 1%
ROUTE AS 80 Ohm DIFFERENTIAL PAIR
PLACE IT CLOSE TO CPU WITHIN 1"
TP004 TP007 TP005 TEST21 TP002
TEST26
+2.5VRUN
R311 8.2K_1%_0402
CPU_FETGATE 37
R312 34.8K_1%_0402
CPU_VDDIO_SUS
TEST26 R025 300_0402
CPU_PRESENT# R026 1K_0402 NC
TEST25_H R230 510_0402
TEST21 R028 300_0402
TEST25_L R229 510_0402
TEST19 R039 300_0402
TEST18 R038 300_0402
+3VRUN
U003
THERMDA
THERMDC
C191 2200p_0402
C189 0.1u_0402
VDD D+ D- T_CRIT_A# SMBCLK SMBDATA ALERT# GND
LM86CIMMXNOPB_MSOP8-RH
SMB_THRMCPU_CLK 21
SMB_THRMCPU_DATA 21
Close to CPU socket
+3VALW
R047 10K_0402 SMB_THRMCPU_DATA
R046 10K_0402 SMB_THRMCPU_CLK

MSI CORPORATION

Title
AMD S1 HT I/F

Size B
Document Number **MS-16332**
Rev 0A

Date: Monday, April 10, 2006
Sheet 4 of 40

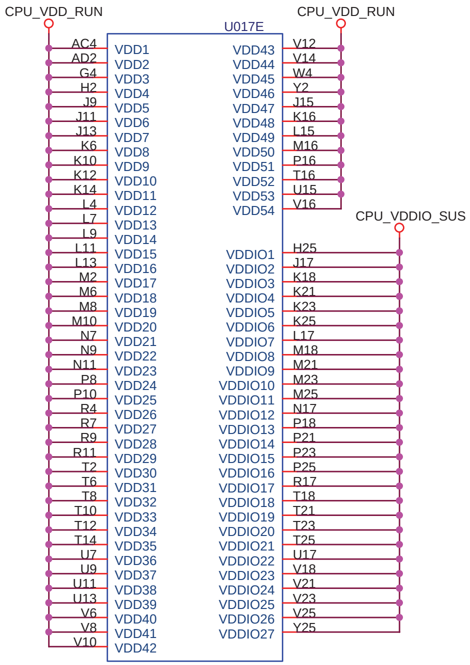
CPU_VDD_RUN
U017E
CPU_VDD_RUN
CPU_VDDIO_SUS
AC4 VDD1
AD2 VDD2
G4 VDD3
H2 VDD4
J9 VDD5
J11 VDD6
J13 VDD7
K6 VDD8
K10 VDD9
K12 VDD10
K14 VDD11
L4 VDD12
L7 VDD13
L9 VDD14
L11 VDD15
L13 VDD16
M2 VDD17
M6 VDD18
M8 VDD19
M10 VDD20
N7 VDD21
N9 VDD22
N11 VDD23
P8 VDD24
P10 VDD25
R4 VDD26
R7 VDD27
R9 VDD28
R11 VDD29
T2 VDD30
T6 VDD31
T8 VDD32
T10 VDD33
T12 VDD34
T14 VDD35
U7 VDD36
U9 VDD37
U11 VDD38
U13 VDD39
V6 VDD40
V8 VDD41
V10 VDD42
VDD43 V12
VDD44 V14
VDD45 W4
VDD46 Y2
VDD47 J15
VDD48 K16
VDD49 L15
VDD50 M16
VDD51 P16
VDD52 T16
VDD53 U15
VDD54 V16
VDDIO1 H25
VDDIO2 J17
VDDIO3 K18
VDDIO4 K21
VDDIO5 K23
VDDIO6 K25
VDDIO7 L17
VDDIO8 M18
VDDIO9 M21
VDDIO10 M23
VDDIO11 M25
VDDIO12 N17
VDDIO13 P18
VDDIO14 P21
VDDIO15 P23
VDDIO16 P25
VDDIO17 R17
VDDIO18 T18
VDDIO19 T21
VDDIO20 T23
VDDIO21 T25
VDDIO22 U17
VDDIO23 V18
VDDIO24 V21
VDDIO25 V23
VDDIO26 V25
VDDIO27 Y25

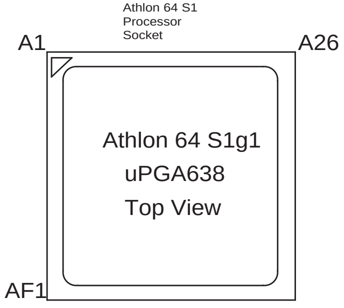
Athlon 64 S1
Processor
Socket
A1
A26
Athlon 64 S1g1
uPGA638
Top View
AF1

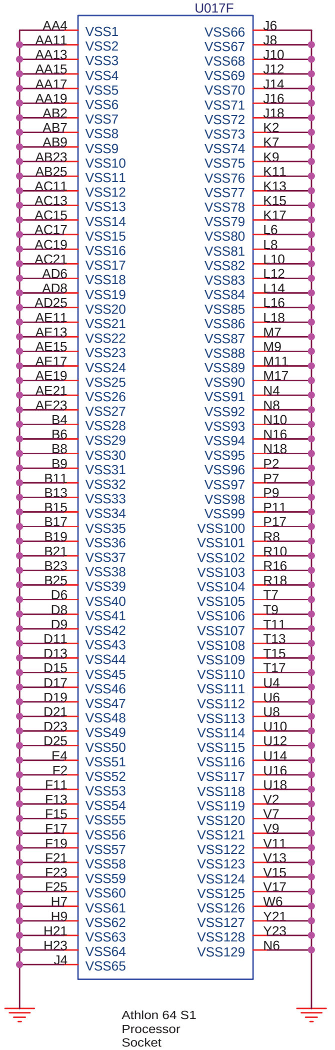
U017F
AA4 VSS1
AA11 VSS2
AA13 VSS3
AA15 VSS4
AA17 VSS5
AA19 VSS6
AB2 VSS7
AB7 VSS8
AB9 VSS9
AB23 VSS10
AB25 VSS11
AC11 VSS12
AC13 VSS13
AC15 VSS14
AC17 VSS15
AC19 VSS16
AC21 VSS17
AD6 VSS18
AD8 VSS19
AD25 VSS20
AE11 VSS21
AE13 VSS22
AE15 VSS23
AE17 VSS24
AE19 VSS25
AE21 VSS26
AE23 VSS27
B4 VSS28
B6 VSS29
B8 VSS30
B9 VSS31
B11 VSS32
B13 VSS33
B15 VSS34
B17 VSS35
B19 VSS36
B21 VSS37
B23 VSS38
B25 VSS39
D6 VSS40
D8 VSS41
D9 VSS42
D11 VSS43
D13 VSS44
D15 VSS45
D17 VSS46
D19 VSS47
D21 VSS48
D23 VSS49
D25 VSS50
F4 VSS51
F2 VSS52
F11 VSS53
F13 VSS54
F15 VSS55
F17 VSS56
F19 VSS57
F21 VSS58
F23 VSS59
F25 VSS60
H7 VSS61
H9 VSS62
H21 VSS63
H23 VSS64
J4 VSS65
VSS66 J6
VSS67 J8
VSS68 J10
VSS69 J12
VSS70 J14
VSS71 J16
VSS72 J18
VSS73 K2
VSS74 K7
VSS75 K9
VSS76 K11
VSS77 K13
VSS78 K15
VSS79 K17
VSS80 L6
VSS81 L8
VSS82 L10
VSS83 L12
VSS84 L14
VSS85 L16
VSS86 L18
VSS87 M7
VSS88 M9
VSS89 M11
VSS90 M17
VSS91 N4
VSS92 N8
VSS93 N10
VSS94 N16
VSS95 N18
VSS96 P2
VSS97 P7
VSS98 P9
VSS99 P11
VSS100 P17
VSS101 R8
VSS102 R10
VSS103 R16
VSS104 R18
VSS105 T7
VSS106 T9
VSS107 T11
VSS108 T13
VSS109 T15
VSS110 T17
VSS111 U4
VSS112 U6
VSS113 U8
VSS114 U10
VSS115 U12
VSS116 U14
VSS117 U16
VSS118 U18
VSS119 V2
VSS120 V7
VSS121 V9
VSS122 V11
VSS123 V13
VSS124 V15
VSS125 V17
VSS126 W6
VSS127 Y21
VSS128 Y23
VSS129 N6
Athlon 64 S1
Processor
Socket

BOTTOMSIDE DECOUPLING

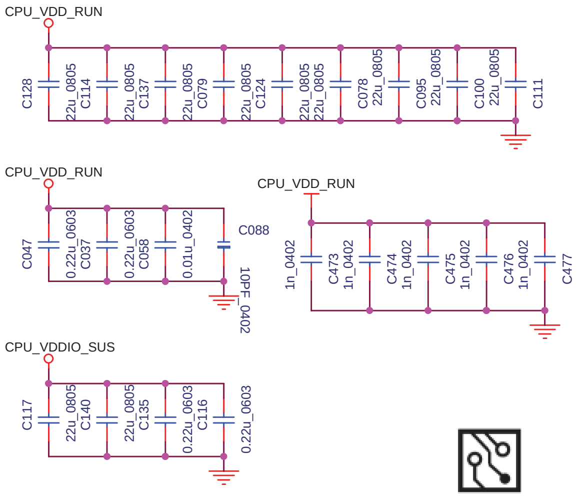
CPU_VDD_RUN
C128
22u_0805
C114
22u_0805
C137
22u_0805
C079
22u_0805
C124
22u_0805
22u_0805
C078
22u_0805
C095
22u_0805
C100
22u_0805
C111
CPU_VDD_RUN
C047
0.22u_0603
C037
0.22u_0603
C058
0.01u_0402
C088
10PF_0402
CPU_VDD_RUN
1n_0402
C473
1n_0402
C474
1n_0402
C475
1n_0402
C476
1n_0402
C477
CPU_VDDIO_SUS
C117
22u_0805
C140
22u_0805
C135
0.22u_0603
C116
0.22u_0603

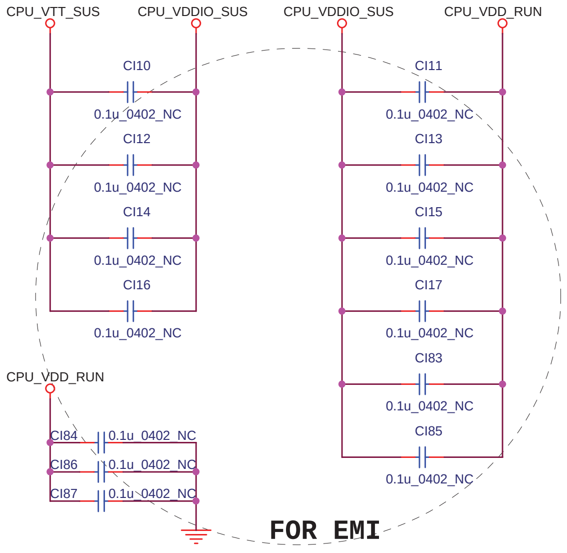
CPU_VTT_SUS
CPU_VDDIO_SUS
CPU_VDDIO_SUS
CPU_VDD_RUN
CI10
0.1u_0402_NC
CI12
0.1u_0402_NC
CI14
0.1u_0402_NC
CI16
0.1u_0402_NC
CI11
0.1u_0402_NC
CI13
0.1u_0402_NC
CI15
0.1u_0402_NC
CI17
0.1u_0402_NC
CI83
0.1u_0402_NC
CI85
0.1u_0402_NC
CPU_VDD_RUN
CI84
0.1u_0402_NC
CI86
0.1u_0402_NC
CI87
0.1u_0402_NC
FOR EMI

DECOUPLING BETWEEN PROCESSOR AND DIMMs
PLACE CLOSE TO PROCESSOR AS POSSIBLE

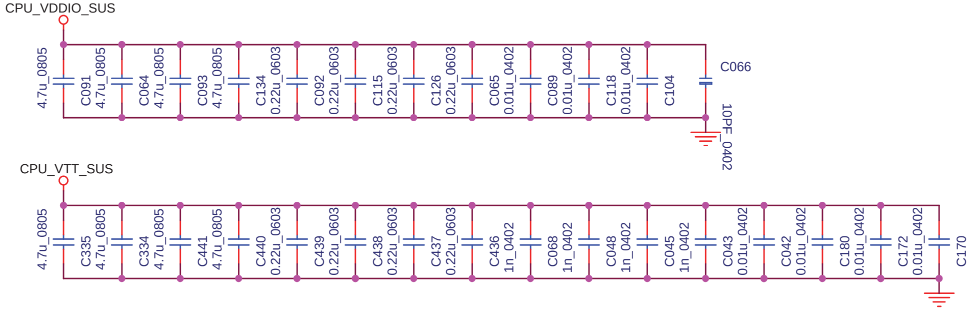
CPU_VDDIO_SUS
4.7u_0805
C091
4.7u_0805
C064
4.7u_0805
C093
4.7u_0805
C134
0.22u_0603
C092
0.22u_0603
C115
0.22u_0603
C126
0.22u_0603
C065
0.01u_0402
C089
0.01u_0402
C118
0.01u_0402
C104
C066
10PF_0402
CPU_VTT_SUS
4.7u_0805
C335
4.7u_0805
C334
4.7u_0805
C441
4.7u_0805
C440
0.22u_0603
C439
0.22u_0603
C438
0.22u_0603
C437
0.22u_0603
C436
1n_0402
C068
1n_0402
C048
1n_0402
C045
1n_0402
C043
0.01u_0402
C042
0.01u_0402
C180
0.01u_0402
C172
0.01u_0402
C170

PROCESSOR POWER AND GROUND

MSI CORPORATION

Title
AMD S1 HT I/F

Size	Document Number	Rev
B	MS-16332	0A

Date: Monday, April 10, 2006 Sheet 5 of 40

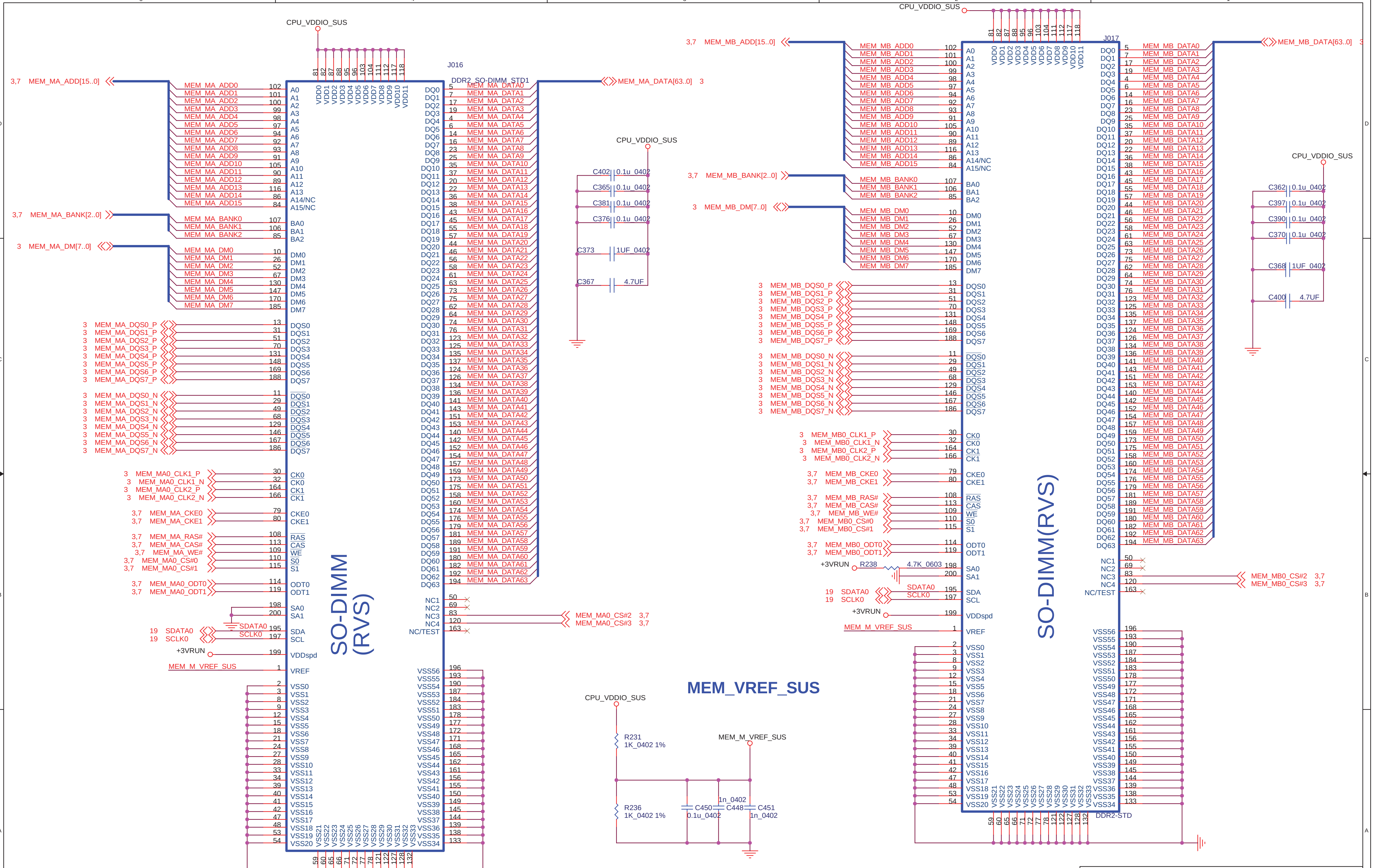
CPU_VDDIO_SUS
J016
DDR2_SO-DIMM_STD1
81 82 87 88 95 96 103 104 111 112 117 118
VDD0 VDD1 VDD2 VDD3 VDD4 VDD5 VDD6 VDD7 VDD8 VDD9 VDD10 VDD11
3,7 MEM_MA_ADD[15..0]
MEM_MA_ADD0 102 A0
MEM_MA_ADD1 101 A1
MEM_MA_ADD2 100 A2
MEM_MA_ADD3 99 A3
MEM_MA_ADD4 98 A4
MEM_MA_ADD5 97 A5
MEM_MA_ADD6 94 A6
MEM_MA_ADD7 92 A7
MEM_MA_ADD8 93 A8
MEM_MA_ADD9 91 A9
MEM_MA_ADD10 105 A10
MEM_MA_ADD11 90 A11
MEM_MA_ADD12 89 A12
MEM_MA_ADD13 116 A13
MEM_MA_ADD14 86 A14/NC
MEM_MA_ADD15 84 A15/NC
3,7 MEM_MA_BANK[2..0]
MEM_MA_BANK0 107 BA0
MEM_MA_BANK1 106 BA1
MEM_MA_BANK2 85 BA2
3 MEM_MA_DM[7..0]
MEM_MA_DM0 10 DM0
MEM_MA_DM1 26 DM1
MEM_MA_DM2 52 DM2
MEM_MA_DM3 67 DM3
MEM_MA_DM4 130 DM4
MEM_MA_DM5 147 DM5
MEM_MA_DM6 170 DM6
MEM_MA_DM7 185 DM7
3 MEM_MA_DQS0_P 13 DQS0
3 MEM_MA_DQS1_P 31 DQS1
3 MEM_MA_DQS2_P 51 DQS2
3 MEM_MA_DQS3_P 70 DQS3
3 MEM_MA_DQS4_P 131 DQS4
3 MEM_MA_DQS5_P 148 DQS5
3 MEM_MA_DQS6_P 169 DQS6
3 MEM_MA_DQS7_P 188 DQS7
3 MEM_MA_DQS0_N 11 DQS0
3 MEM_MA_DQS1_N 29 DQS1
3 MEM_MA_DQS2_N 49 DQS2
3 MEM_MA_DQS3_N 68 DQS3
3 MEM_MA_DQS4_N 129 DQS4
3 MEM_MA_DQS5_N 146 DQS5
3 MEM_MA_DQS6_N 167 DQS6
3 MEM_MA_DQS7_N 186 DQS7
3 MEM_MA0_CLK1_P 30 CK0
3 MEM_MA0_CLK1_N 32 CK0
3 MEM_MA0_CLK2_P 164 CK1
3 MEM_MA0_CLK2_N 166 CK1
3,7 MEM_MA_CKE0 79 CKE0
3,7 MEM_MA_CKE1 80 CKE1
3,7 MEM_MA_RAS# 108 RAS
3,7 MEM_MA_CAS# 113 CAS
3,7 MEM_MA_WE# 109 WE
3,7 MEM_MA0_CS#0 110 S0
3,7 MEM_MA0_CS#1 115 S1
3,7 MEM_MA0_ODT0 114 ODT0
3,7 MEM_MA0_ODT1 119 ODT1
198 SA0
200 SA1
19 SDATA0 SDATA0 195 SDA
19 SCLK0 SCLK0 197 SCL
+3VRUN 199 VDDspd
MEM_M_VREF_SUS 1 VREF
2 VSS0
3 VSS1
8 VSS2
9 VSS3
12 VSS4
15 VSS5
18 VSS6
21 VSS7
24 VSS8
27 VSS9
28 VSS10
33 VSS11
34 VSS12
39 VSS13
40 VSS14
41 VSS15
42 VSS16
47 VSS17
48 VSS18
53 VSS19
54 VSS20
VSS21 VSS22 VSS23 VSS24 VSS25 VSS26 VSS27 VSS28 VSS29 VSS30 VSS31 VSS32 VSS33
59 60 65 66 71 72 77 78 121 122 127 128 132
SO-DIMM (RVS)
DQ0 5 MEM_MA_DATA0
DQ1 7 MEM_MA_DATA1
DQ2 17 MEM_MA_DATA2
DQ3 19 MEM_MA_DATA3
DQ4 4 MEM_MA_DATA4
DQ5 6 MEM_MA_DATA5
DQ6 14 MEM_MA_DATA6
DQ7 16 MEM_MA_DATA7
DQ8 23 MEM_MA_DATA8
DQ9 25 MEM_MA_DATA9
DQ10 35 MEM_MA_DATA10
DQ11 37 MEM_MA_DATA11
DQ12 20 MEM_MA_DATA12
DQ13 22 MEM_MA_DATA13
DQ14 36 MEM_MA_DATA14
DQ15 38 MEM_MA_DATA15
DQ16 43 MEM_MA_DATA16
DQ17 45 MEM_MA_DATA17
DQ18 55 MEM_MA_DATA18
DQ19 57 MEM_MA_DATA19
DQ20 44 MEM_MA_DATA20
DQ21 46 MEM_MA_DATA21
DQ22 56 MEM_MA_DATA22
DQ23 58 MEM_MA_DATA23
DQ24 61 MEM_MA_DATA24
DQ25 63 MEM_MA_DATA25
DQ26 73 MEM_MA_DATA26
DQ27 75 MEM_MA_DATA27
DQ28 62 MEM_MA_DATA28
DQ29 64 MEM_MA_DATA29
DQ30 74 MEM_MA_DATA30
DQ31 76 MEM_MA_DATA31
DQ32 123 MEM_MA_DATA32
DQ33 125 MEM_MA_DATA33
DQ34 135 MEM_MA_DATA34
DQ35 137 MEM_MA_DATA35
DQ36 124 MEM_MA_DATA36
DQ37 126 MEM_MA_DATA37
DQ38 134 MEM_MA_DATA38
DQ39 136 MEM_MA_DATA39
DQ40 141 MEM_MA_DATA40
DQ41 143 MEM_MA_DATA41
DQ42 151 MEM_MA_DATA42
DQ43 153 MEM_MA_DATA43
DQ44 140 MEM_MA_DATA44
DQ45 142 MEM_MA_DATA45
DQ46 152 MEM_MA_DATA46
DQ47 154 MEM_MA_DATA47
DQ48 157 MEM_MA_DATA48
DQ49 159 MEM_MA_DATA49
DQ50 173 MEM_MA_DATA50
DQ51 175 MEM_MA_DATA51
DQ52 158 MEM_MA_DATA52
DQ53 160 MEM_MA_DATA53
DQ54 174 MEM_MA_DATA54
DQ55 176 MEM_MA_DATA55
DQ56 179 MEM_MA_DATA56
DQ57 181 MEM_MA_DATA57
DQ58 189 MEM_MA_DATA58
DQ59 191 MEM_MA_DATA59
DQ60 180 MEM_MA_DATA60
DQ61 182 MEM_MA_DATA61
DQ62 192 MEM_MA_DATA62
DQ63 194 MEM_MA_DATA63
MEM_MA_DATA[63..0] 3
NC1 50
NC2 69
NC3 83 MEM_MA0_CS#2 3,7
NC4 120 MEM_MA0_CS#3 3,7
NC/TEST 163
VSS56 196
VSS55 193
VSS54 190
VSS53 187
VSS52 184
VSS51 183
VSS50 178
VSS49 177
VSS48 172
VSS47 171
VSS46 168
VSS45 165
VSS44 162
VSS43 161
VSS42 156
VSS41 155
VSS40 150
VSS39 149
VSS38 145
VSS37 144
VSS36 139
VSS35 138
VSS34 133
CPU_VDDIO_SUS
C402 0.1u_0402
C365 0.1u_0402
C381 0.1u_0402
C376 0.1u_0402
C373 1UF_0402
C367 4.7UF
MEM_VREF_SUS
CPU_VDDIO_SUS
R231 1K_0402 1%
R236 1K_0402 1%
MEM_M_VREF_SUS
C450 0.1u_0402
C448 1n_0402
C451 1n_0402
CPU_VDDIO_SUS
J017
81 82 87 88 95 96 103 104 111 112 117 118
VDD0 VDD1 VDD2 VDD3 VDD4 VDD5 VDD6 VDD7 VDD8 VDD9 VDD10 VDD11
3,7 MEM_MB_ADD[15..0]
MEM_MB_ADD0 102 A0
MEM_MB_ADD1 101 A1
MEM_MB_ADD2 100 A2
MEM_MB_ADD3 99 A3
MEM_MB_ADD4 98 A4
MEM_MB_ADD5 97 A5
MEM_MB_ADD6 94 A6
MEM_MB_ADD7 92 A7
MEM_MB_ADD8 93 A8
MEM_MB_ADD9 91 A9
MEM_MB_ADD10 105 A10
MEM_MB_ADD11 90 A11
MEM_MB_ADD12 89 A12
MEM_MB_ADD13 116 A13
MEM_MB_ADD14 86 A14/NC
MEM_MB_ADD15 84 A15/NC
3,7 MEM_MB_BANK[2..0]
MEM_MB_BANK0 107 BA0
MEM_MB_BANK1 106 BA1
MEM_MB_BANK2 85 BA2
3 MEM_MB_DM[7..0]
MEM_MB_DM0 10 DM0
MEM_MB_DM1 26 DM1
MEM_MB_DM2 52 DM2
MEM_MB_DM3 67 DM3
MEM_MB_DM4 130 DM4
MEM_MB_DM5 147 DM5
MEM_MB_DM6 170 DM6
MEM_MB_DM7 185 DM7
3 MEM_MB_DQS0_P 13 DQS0
3 MEM_MB_DQS1_P 31 DQS1
3 MEM_MB_DQS2_P 51 DQS2
3 MEM_MB_DQS3_P 70 DQS3
3 MEM_MB_DQS4_P 131 DQS4
3 MEM_MB_DQS5_P 148 DQS5
3 MEM_MB_DQS6_P 169 DQS6
3 MEM_MB_DQS7_P 188 DQS7
3 MEM_MB_DQS0_N 11 DQS0
3 MEM_MB_DQS1_N 29 DQS1
3 MEM_MB_DQS2_N 49 DQS2
3 MEM_MB_DQS3_N 68 DQS3
3 MEM_MB_DQS4_N 129 DQS4
3 MEM_MB_DQS5_N 146 DQS5
3 MEM_MB_DQS6_N 167 DQS6
3 MEM_MB_DQS7_N 186 DQS7
3 MEM_MB0_CLK1_P 30 CK0
3 MEM_MB0_CLK1_N 32 CK0
3 MEM_MB0_CLK2_P 164 CK1
3 MEM_MB0_CLK2_N 166 CK1
3,7 MEM_MB_CKE0 79 CKE0
3,7 MEM_MB_CKE1 80 CKE1
3,7 MEM_MB_RAS# 108 RAS
3,7 MEM_MB_CAS# 113 CAS
3,7 MEM_MB_WE# 109 WE
3,7 MEM_MB0_CS#0 110 S0
3,7 MEM_MB0_CS#1 115 S1
3,7 MEM_MB0_ODT0 114 ODT0
3,7 MEM_MB0_ODT1 119 ODT1
+3VRUN R238 4.7K_0603 198 SA0
200 SA1
19 SDATA0 SDATA0 195 SDA
19 SCLK0 SCLK0 197 SCL
+3VRUN 199 VDDspd
MEM_M_VREF_SUS 1 VREF
2 VSS0
3 VSS1
8 VSS2
9 VSS3
12 VSS4
15 VSS5
18 VSS6
21 VSS7
24 VSS8
27 VSS9
28 VSS10
33 VSS11
34 VSS12
39 VSS13
40 VSS14
41 VSS15
42 VSS16
47 VSS17
48 VSS18
53 VSS19
54 VSS20
VSS21 VSS22 VSS23 VSS24 VSS25 VSS26 VSS27 VSS28 VSS29 VSS30 VSS31 VSS32 VSS33
59 60 65 66 71 72 77 78 121 122 127 128 132
DDR2-STD
SO-DIMM(RVS)
DQ0 5 MEM_MB_DATA0
DQ1 7 MEM_MB_DATA1
DQ2 17 MEM_MB_DATA2
DQ3 19 MEM_MB_DATA3
DQ4 4 MEM_MB_DATA4
DQ5 6 MEM_MB_DATA5
DQ6 14 MEM_MB_DATA6
DQ7 16 MEM_MB_DATA7
DQ8 23 MEM_MB_DATA8
DQ9 25 MEM_MB_DATA9
DQ10 35 MEM_MB_DATA10
DQ11 37 MEM_MB_DATA11
DQ12 20 MEM_MB_DATA12
DQ13 22 MEM_MB_DATA13
DQ14 36 MEM_MB_DATA14
DQ15 38 MEM_MB_DATA15
DQ16 43 MEM_MB_DATA16
DQ17 45 MEM_MB_DATA17
DQ18 55 MEM_MB_DATA18
DQ19 57 MEM_MB_DATA19
DQ20 44 MEM_MB_DATA20
DQ21 46 MEM_MB_DATA21
DQ22 56 MEM_MB_DATA22
DQ23 58 MEM_MB_DATA23
DQ24 61 MEM_MB_DATA24
DQ25 63 MEM_MB_DATA25
DQ26 73 MEM_MB_DATA26
DQ27 75 MEM_MB_DATA27
DQ28 62 MEM_MB_DATA28
DQ29 64 MEM_MB_DATA29
DQ30 74 MEM_MB_DATA30
DQ31 76 MEM_MB_DATA31
DQ32 123 MEM_MB_DATA32
DQ33 125 MEM_MB_DATA33
DQ34 135 MEM_MB_DATA34
DQ35 137 MEM_MB_DATA35
DQ36 124 MEM_MB_DATA36
DQ37 126 MEM_MB_DATA37
DQ38 134 MEM_MB_DATA38
DQ39 136 MEM_MB_DATA39
DQ40 141 MEM_MB_DATA40
DQ41 143 MEM_MB_DATA41
DQ42 151 MEM_MB_DATA42
DQ43 153 MEM_MB_DATA43
DQ44 140 MEM_MB_DATA44
DQ45 142 MEM_MB_DATA45
DQ46 152 MEM_MB_DATA46
DQ47 154 MEM_MB_DATA47
DQ48 157 MEM_MB_DATA48
DQ49 159 MEM_MB_DATA49
DQ50 173 MEM_MB_DATA50
DQ51 175 MEM_MB_DATA51
DQ52 158 MEM_MB_DATA52
DQ53 160 MEM_MB_DATA53
DQ54 174 MEM_MB_DATA54
DQ55 176 MEM_MB_DATA55
DQ56 179 MEM_MB_DATA56
DQ57 181 MEM_MB_DATA57
DQ58 189 MEM_MB_DATA58
DQ59 191 MEM_MB_DATA59
DQ60 180 MEM_MB_DATA60
DQ61 182 MEM_MB_DATA61
DQ62 192 MEM_MB_DATA62
DQ63 194 MEM_MB_DATA63
MEM_MB_DATA[63..0] 3
NC1 50
NC2 69
NC3 83 MEM_MB0_CS#2 3,7
NC4 120 MEM_MB0_CS#3 3,7
NC/TEST 163
VSS56 196
VSS55 193
VSS54 190
VSS53 187
VSS52 184
VSS51 183
VSS50 178
VSS49 177
VSS48 172
VSS47 171
VSS46 168
VSS45 165
VSS44 162
VSS43 161
VSS42 156
VSS41 155
VSS40 150
VSS39 149
VSS38 145
VSS37 144
VSS36 139
VSS35 138
VSS34 133
CPU_VDDIO_SUS
C362 0.1u_0402
C397 0.1u_0402
C390 0.1u_0402
C370 0.1u_0402
C368 1UF_0402
C400 4.7UF

LAYOUT: PLACE CLOSE TO DIMMs

MSI CORPORATION

Title
DDR2 SODIMMS: A/B CHANNEL

Size Custom
Document Number **MS-16332**
Rev 0A
Date: Monday, April 10, 2006
Sheet 6 of 40

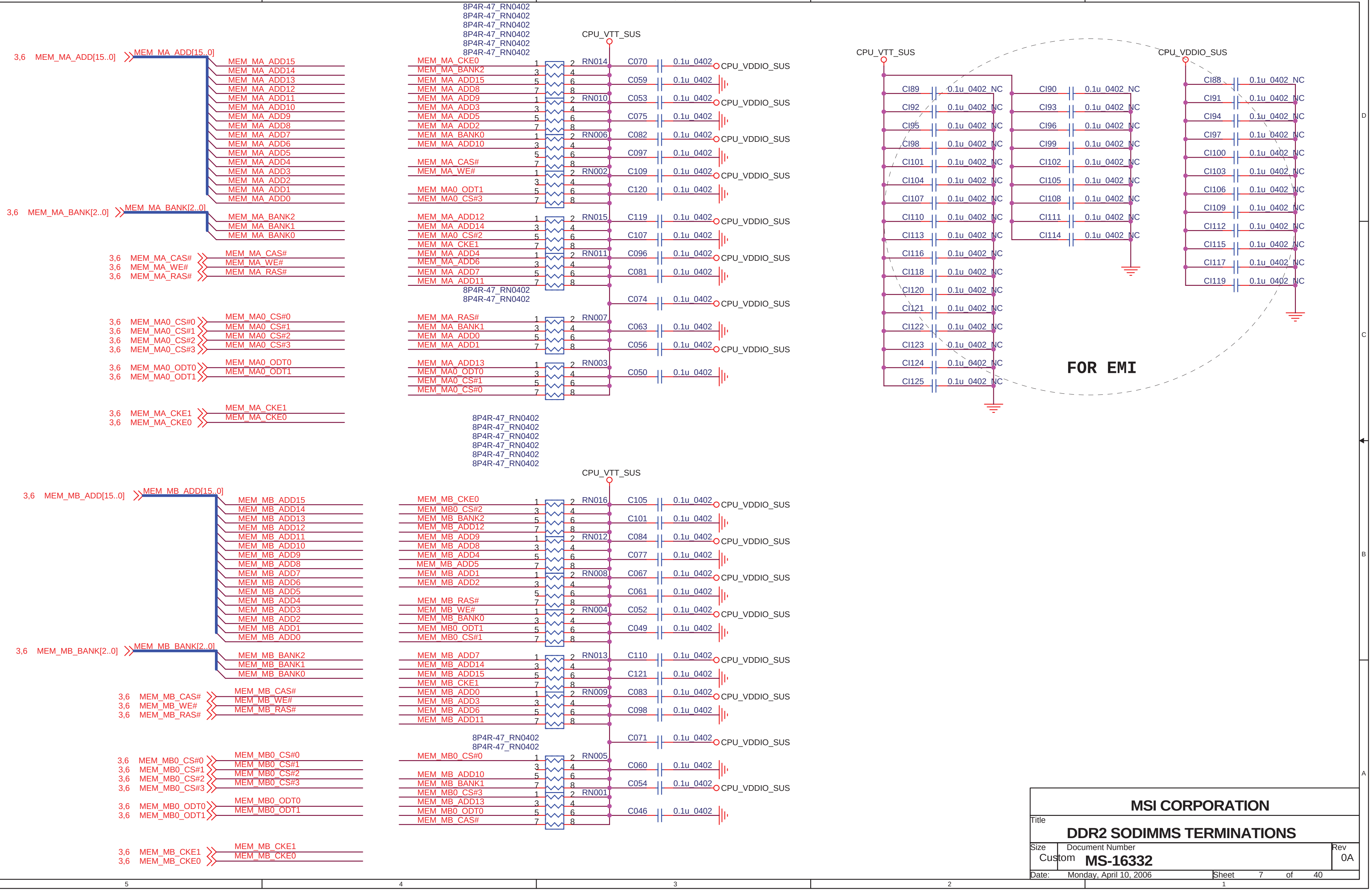

3,6 MEM_MA_ADD[15..0]
MEM_MA_ADD[15..0]
MEM_MA_ADD15
MEM_MA_ADD14
MEM_MA_ADD13
MEM_MA_ADD12
MEM_MA_ADD11
MEM_MA_ADD10
MEM_MA_ADD9
MEM_MA_ADD8
MEM_MA_ADD7
MEM_MA_ADD6
MEM_MA_ADD5
MEM_MA_ADD4
MEM_MA_ADD3
MEM_MA_ADD2
MEM_MA_ADD1
MEM_MA_ADD0
3,6 MEM_MA_BANK[2..0]
MEM_MA_BANK[2..0]
MEM_MA_BANK2
MEM_MA_BANK1
MEM_MA_BANK0
3,6 MEM_MA_CAS#
3,6 MEM_MA_WE#
3,6 MEM_MA_RAS#
3,6 MEM_MA0_CS#0
3,6 MEM_MA0_CS#1
3,6 MEM_MA0_CS#2
3,6 MEM_MA0_CS#3
3,6 MEM_MA0_ODT0
3,6 MEM_MA0_ODT1
3,6 MEM_MA_CKE1
3,6 MEM_MA_CKE0
8P4R-47_RN0402
CPU_VTT_SUS
RN014
RN010
RN006
RN002
RN015
RN011
RN007
RN003
MEM_MA_CKE0
MEM_MA_BANK2
MEM_MA_ADD15
MEM_MA_ADD8
MEM_MA_ADD9
MEM_MA_ADD3
MEM_MA_ADD5
MEM_MA_ADD2
MEM_MA_BANK0
MEM_MA_ADD10
MEM_MA_CAS#
MEM_MA_WE#
MEM_MA0_ODT1
MEM_MA0_CS#3
MEM_MA_ADD12
MEM_MA_ADD14
MEM_MA0_CS#2
MEM_MA_CKE1
MEM_MA_ADD4
MEM_MA_ADD6
MEM_MA_ADD7
MEM_MA_ADD11
MEM_MA_RAS#
MEM_MA_BANK1
MEM_MA_ADD0
MEM_MA_ADD1
MEM_MA_ADD13
MEM_MA0_ODT0
MEM_MA0_CS#1
MEM_MA0_CS#0
C070 0.1u_0402
C059 0.1u_0402
C053 0.1u_0402
C075 0.1u_0402
C082 0.1u_0402
C097 0.1u_0402
C109 0.1u_0402
C120 0.1u_0402
C119 0.1u_0402
C107 0.1u_0402
C096 0.1u_0402
C081 0.1u_0402
C074 0.1u_0402
C063 0.1u_0402
C056 0.1u_0402
C050 0.1u_0402
CPU_VDDIO_SUS
CPU_VTT_SUS
CPU_VDDIO_SUS
CI89 0.1u_0402_NC
CI92 0.1u_0402_NC
CI95 0.1u_0402_NC
CI98 0.1u_0402_NC
CI101 0.1u_0402_NC
CI104 0.1u_0402_NC
CI107 0.1u_0402_NC
CI110 0.1u_0402_NC
CI113 0.1u_0402_NC
CI116 0.1u_0402_NC
CI118 0.1u_0402_NC
CI120 0.1u_0402_NC
CI121 0.1u_0402_NC
CI122 0.1u_0402_NC
CI123 0.1u_0402_NC
CI124 0.1u_0402_NC
CI125 0.1u_0402_NC
CI90 0.1u_0402_NC
CI93 0.1u_0402_NC
CI96 0.1u_0402_NC
CI99 0.1u_0402_NC
CI102 0.1u_0402_NC
CI105 0.1u_0402_NC
CI108 0.1u_0402_NC
CI111 0.1u_0402_NC
CI114 0.1u_0402_NC
CI88 0.1u_0402_NC
CI91 0.1u_0402_NC
CI94 0.1u_0402_NC
CI97 0.1u_0402_NC
CI100 0.1u_0402_NC
CI103 0.1u_0402_NC
CI106 0.1u_0402_NC
CI109 0.1u_0402_NC
CI112 0.1u_0402_NC
CI115 0.1u_0402_NC
CI117 0.1u_0402_NC
CI119 0.1u_0402_NC
FOR EMI
3,6 MEM_MB_ADD[15..0]
MEM_MB_ADD[15..0]
MEM_MB_ADD15
MEM_MB_ADD14
MEM_MB_ADD13
MEM_MB_ADD12
MEM_MB_ADD11
MEM_MB_ADD10
MEM_MB_ADD9
MEM_MB_ADD8
MEM_MB_ADD7
MEM_MB_ADD6
MEM_MB_ADD5
MEM_MB_ADD4
MEM_MB_ADD3
MEM_MB_ADD2
MEM_MB_ADD1
MEM_MB_ADD0
3,6 MEM_MB_BANK[2..0]
MEM_MB_BANK[2..0]
MEM_MB_BANK2
MEM_MB_BANK1
MEM_MB_BANK0
3,6 MEM_MB_CAS#
3,6 MEM_MB_WE#
3,6 MEM_MB_RAS#
3,6 MEM_MB0_CS#0
3,6 MEM_MB0_CS#1
3,6 MEM_MB0_CS#2
3,6 MEM_MB0_CS#3
3,6 MEM_MB0_ODT0
3,6 MEM_MB0_ODT1
3,6 MEM_MB_CKE1
3,6 MEM_MB_CKE0
RN016
RN012
RN008
RN004
RN013
RN009
RN005
RN001
MEM_MB_CKE0
MEM_MB0_CS#2
MEM_MB_BANK2
MEM_MB_ADD12
MEM_MB_ADD9
MEM_MB_ADD8
MEM_MB_ADD4
MEM_MB_ADD5
MEM_MB_ADD1
MEM_MB_ADD2
MEM_MB_RAS#
MEM_MB_WE#
MEM_MB_BANK0
MEM_MB0_ODT1
MEM_MB0_CS#1
MEM_MB_ADD7
MEM_MB_ADD14
MEM_MB_ADD15
MEM_MB_CKE1
MEM_MB_ADD0
MEM_MB_ADD3
MEM_MB_ADD6
MEM_MB_ADD11
MEM_MB0_CS#0
MEM_MB_ADD10
MEM_MB_BANK1
MEM_MB0_CS#3
MEM_MB_ADD13
MEM_MB0_ODT0
MEM_MB_CAS#
C105 0.1u_0402
C101 0.1u_0402
C084 0.1u_0402
C077 0.1u_0402
C067 0.1u_0402
C061 0.1u_0402
C052 0.1u_0402
C049 0.1u_0402
C110 0.1u_0402
C121 0.1u_0402
C083 0.1u_0402
C098 0.1u_0402
C071 0.1u_0402
C060 0.1u_0402
C054 0.1u_0402
C046 0.1u_0402

MSI CORPORATION

Title

DDR2 SODIMMS TERMINATIONS

Size: Custom
Document Number: MS-16332
Rev: 0A

Date: Monday, April 10, 2006
Sheet 7 of 40

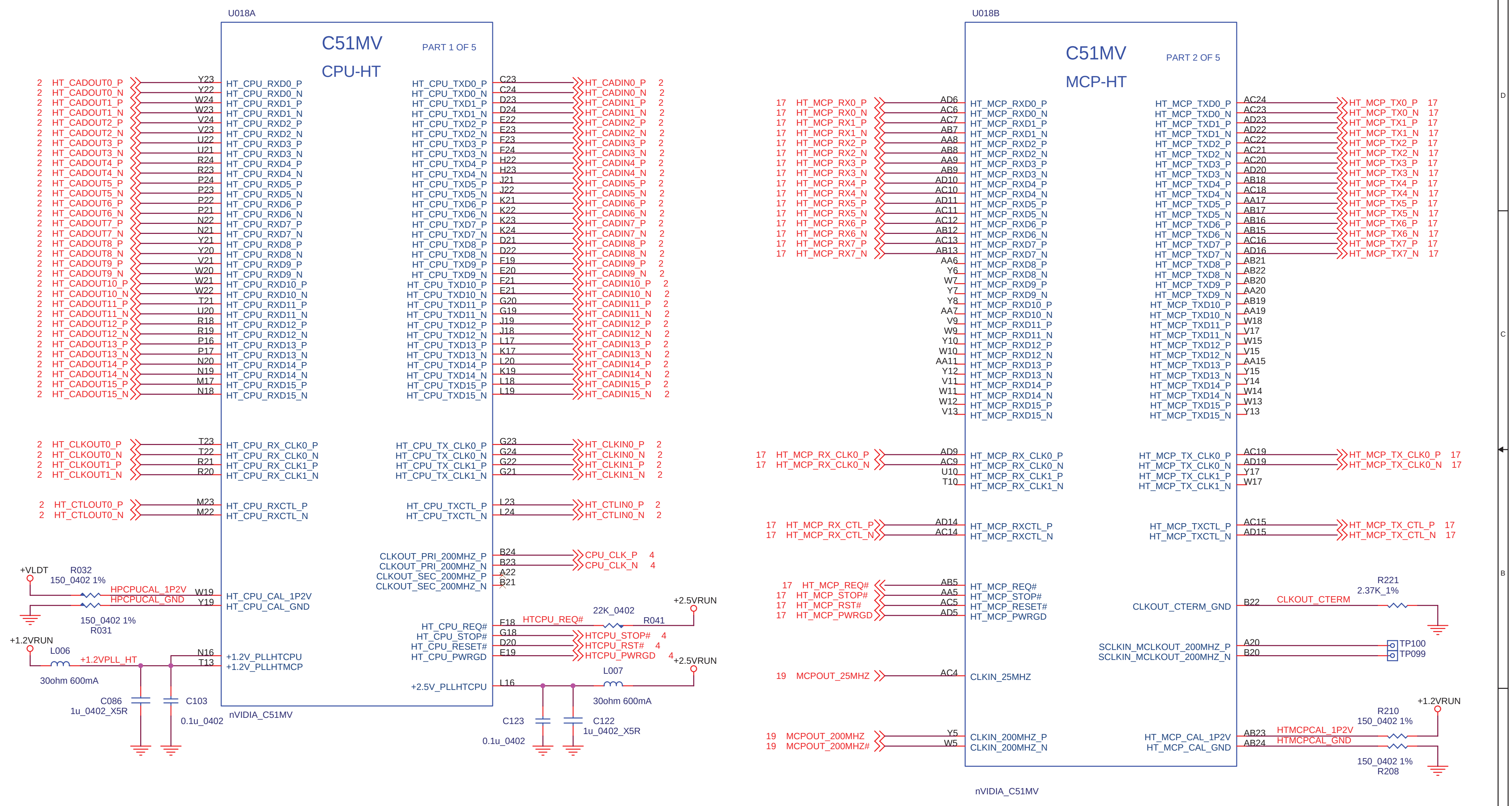
U018A
C51MV
PART 1 OF 5
CPU-HT
2 HT_CADOUT0_P Y23 HT_CPU_RXD0_P
2 HT_CADOUT0_N Y22 HT_CPU_RXD0_N
2 HT_CADOUT1_P W24 HT_CPU_RXD1_P
2 HT_CADOUT1_N W23 HT_CPU_RXD1_N
2 HT_CADOUT2_P V24 HT_CPU_RXD2_P
2 HT_CADOUT2_N V23 HT_CPU_RXD2_N
2 HT_CADOUT3_P U22 HT_CPU_RXD3_P
2 HT_CADOUT3_N U21 HT_CPU_RXD3_N
2 HT_CADOUT4_P R24 HT_CPU_RXD4_P
2 HT_CADOUT4_N R23 HT_CPU_RXD4_N
2 HT_CADOUT5_P P24 HT_CPU_RXD5_P
2 HT_CADOUT5_N P23 HT_CPU_RXD5_N
2 HT_CADOUT6_P P22 HT_CPU_RXD6_P
2 HT_CADOUT6_N P21 HT_CPU_RXD6_N
2 HT_CADOUT7_P N22 HT_CPU_RXD7_P
2 HT_CADOUT7_N N21 HT_CPU_RXD7_N
2 HT_CADOUT8_P Y21 HT_CPU_RXD8_P
2 HT_CADOUT8_N Y20 HT_CPU_RXD8_N
2 HT_CADOUT9_P V21 HT_CPU_RXD9_P
2 HT_CADOUT9_N W20 HT_CPU_RXD9_N
2 HT_CADOUT10_P W21 HT_CPU_RXD10_P
2 HT_CADOUT10_N W22 HT_CPU_RXD10_N
2 HT_CADOUT11_P T21 HT_CPU_RXD11_P
2 HT_CADOUT11_N U20 HT_CPU_RXD11_N
2 HT_CADOUT12_P R18 HT_CPU_RXD12_P
2 HT_CADOUT12_N R19 HT_CPU_RXD12_N
2 HT_CADOUT13_P P16 HT_CPU_RXD13_P
2 HT_CADOUT13_N P17 HT_CPU_RXD13_N
2 HT_CADOUT14_P N20 HT_CPU_RXD14_P
2 HT_CADOUT14_N N19 HT_CPU_RXD14_N
2 HT_CADOUT15_P M17 HT_CPU_RXD15_P
2 HT_CADOUT15_N N18 HT_CPU_RXD15_N
HT_CPU_TXD0_P C23 HT_CADIN0_P 2
HT_CPU_TXD0_N C24 HT_CADIN0_N 2
HT_CPU_TXD1_P D23 HT_CADIN1_P 2
HT_CPU_TXD1_N D24 HT_CADIN1_N 2
HT_CPU_TXD2_P E22 HT_CADIN2_P 2
HT_CPU_TXD2_N E23 HT_CADIN2_N 2
HT_CPU_TXD3_P F23 HT_CADIN3_P 2
HT_CPU_TXD3_N F24 HT_CADIN3_N 2
HT_CPU_TXD4_P H22 HT_CADIN4_P 2
HT_CPU_TXD4_N H23 HT_CADIN4_N 2
HT_CPU_TXD5_P J21 HT_CADIN5_P 2
HT_CPU_TXD5_N J22 HT_CADIN5_N 2
HT_CPU_TXD6_P K21 HT_CADIN6_P 2
HT_CPU_TXD6_N K22 HT_CADIN6_N 2
HT_CPU_TXD7_P K23 HT_CADIN7_P 2
HT_CPU_TXD7_N K24 HT_CADIN7_N 2
HT_CPU_TXD8_P D21 HT_CADIN8_P 2
HT_CPU_TXD8_N D22 HT_CADIN8_N 2
HT_CPU_TXD9_P F19 HT_CADIN9_P 2
HT_CPU_TXD9_N E20 HT_CADIN9_N 2
HT_CPU_TXD10_P F21 HT_CADIN10_P 2
HT_CPU_TXD10_N E21 HT_CADIN10_N 2
HT_CPU_TXD11_P G20 HT_CADIN11_P 2
HT_CPU_TXD11_N G19 HT_CADIN11_N 2
HT_CPU_TXD12_P J19 HT_CADIN12_P 2
HT_CPU_TXD12_N J18 HT_CADIN12_N 2
HT_CPU_TXD13_P L17 HT_CADIN13_P 2
HT_CPU_TXD13_N K17 HT_CADIN13_N 2
HT_CPU_TXD14_P L20 HT_CADIN14_P 2
HT_CPU_TXD14_N K19 HT_CADIN14_N 2
HT_CPU_TXD15_P L18 HT_CADIN15_P 2
HT_CPU_TXD15_N L19 HT_CADIN15_N 2
2 HT_CLKOUT0_P T23 HT_CPU_RX_CLK0_P
2 HT_CLKOUT0_N T22 HT_CPU_RX_CLK0_N
2 HT_CLKOUT1_P R21 HT_CPU_RX_CLK1_P
2 HT_CLKOUT1_N R20 HT_CPU_RX_CLK1_N
HT_CPU_TX_CLK0_P G23 HT_CLKIN0_P 2
HT_CPU_TX_CLK0_N G24 HT_CLKIN0_N 2
HT_CPU_TX_CLK1_P G22 HT_CLKIN1_P 2
HT_CPU_TX_CLK1_N G21 HT_CLKIN1_N 2
2 HT_CTLOUT0_P M23 HT_CPU_RXCTL_P
2 HT_CTLOUT0_N M22 HT_CPU_RXCTL_N
HT_CPU_TXCTL_P L23 HT_CTLIN0_P 2
HT_CPU_TXCTL_N L24 HT_CTLIN0_N 2
CLKOUT_PRI_200MHZ_P B24 CPU_CLK_P 4
CLKOUT_PRI_200MHZ_N B23 CPU_CLK_N 4
CLKOUT_SEC_200MHZ_P A22
CLKOUT_SEC_200MHZ_N B21
+VLDT
R032
150_0402 1%
HPCPUCAL_1P2V W19 HT_CPU_CAL_1P2V
HPCPUCAL_GND Y19 HT_CPU_CAL_GND
150_0402 1%
R031
+1.2VRUN
L006
+1.2VPLL_HT
30ohm 600mA
N16 +1.2V_PLLHTCPU
T13 +1.2V_PLLHTMCP
C086
1u_0402_X5R
C103
0.1u_0402
nVIDIA_C51MV
HT_CPU_REQ# F18 HTCPU_REQ#
22K_0402
R041
+2.5VRUN
HT_CPU_STOP# G18 HTCPU_STOP# 4
HT_CPU_RESET# D20 HTCPU_RST# 4
HT_CPU_PWRGD E19 HTCPU_PWRGD 4
+2.5VRUN
L007
+2.5V_PLLHTCPU L16
30ohm 600mA
C123
0.1u_0402
C122
1u_0402_X5R
U018B
C51MV
PART 2 OF 5
MCP-HT
17 HT_MCP_RX0_P AD6 HT_MCP_RXD0_P
17 HT_MCP_RX0_N AC6 HT_MCP_RXD0_N
17 HT_MCP_RX1_P AC7 HT_MCP_RXD1_P
17 HT_MCP_RX1_N AB7 HT_MCP_RXD1_N
17 HT_MCP_RX2_P AA8 HT_MCP_RXD2_P
17 HT_MCP_RX2_N AB8 HT_MCP_RXD2_N
17 HT_MCP_RX3_P AA9 HT_MCP_RXD3_P
17 HT_MCP_RX3_N AB9 HT_MCP_RXD3_N
17 HT_MCP_RX4_P AD10 HT_MCP_RXD4_P
17 HT_MCP_RX4_N AC10 HT_MCP_RXD4_N
17 HT_MCP_RX5_P AD11 HT_MCP_RXD5_P
17 HT_MCP_RX5_N AC11 HT_MCP_RXD5_N
17 HT_MCP_RX6_P AC12 HT_MCP_RXD6_P
17 HT_MCP_RX6_N AB12 HT_MCP_RXD6_N
17 HT_MCP_RX7_P AC13 HT_MCP_RXD7_P
17 HT_MCP_RX7_N AB13 HT_MCP_RXD7_N
AA6 HT_MCP_RXD8_P
Y6 HT_MCP_RXD8_N
W7 HT_MCP_RXD9_P
Y7 HT_MCP_RXD9_N
Y8 HT_MCP_RXD10_P
AA7 HT_MCP_RXD10_N
V9 HT_MCP_RXD11_P
W9 HT_MCP_RXD11_N
Y10 HT_MCP_RXD12_P
W10 HT_MCP_RXD12_N
AA11 HT_MCP_RXD13_P
Y12 HT_MCP_RXD13_N
V11 HT_MCP_RXD14_P
W11 HT_MCP_RXD14_N
W12 HT_MCP_RXD15_P
V13 HT_MCP_RXD15_N
HT_MCP_TXD0_P AC24 HT_MCP_TX0_P 17
HT_MCP_TXD0_N AC23 HT_MCP_TX0_N 17
HT_MCP_TXD1_P AD23 HT_MCP_TX1_P 17
HT_MCP_TXD1_N AD22 HT_MCP_TX1_N 17
HT_MCP_TXD2_P AC22 HT_MCP_TX2_P 17
HT_MCP_TXD2_N AC21 HT_MCP_TX2_N 17
HT_MCP_TXD3_P AC20 HT_MCP_TX3_P 17
HT_MCP_TXD3_N AD20 HT_MCP_TX3_N 17
HT_MCP_TXD4_P AB18 HT_MCP_TX4_P 17
HT_MCP_TXD4_N AC18 HT_MCP_TX4_N 17
HT_MCP_TXD5_P AA17 HT_MCP_TX5_P 17
HT_MCP_TXD5_N AB17 HT_MCP_TX5_N 17
HT_MCP_TXD6_P AB16 HT_MCP_TX6_P 17
HT_MCP_TXD6_N AB15 HT_MCP_TX6_N 17
HT_MCP_TXD7_P AC16 HT_MCP_TX7_P 17
HT_MCP_TXD7_N AD16 HT_MCP_TX7_N 17
HT_MCP_TXD8_P AB21
HT_MCP_TXD8_N AB22
HT_MCP_TXD9_P AB20
HT_MCP_TXD9_N AA20
HT_MCP_TXD10_P AB19
HT_MCP_TXD10_N AA19
HT_MCP_TXD11_P W18
HT_MCP_TXD11_N V17
HT_MCP_TXD12_P W15
HT_MCP_TXD12_N V15
HT_MCP_TXD13_P AA15
HT_MCP_TXD13_N Y15
HT_MCP_TXD14_P Y14
HT_MCP_TXD14_N W14
HT_MCP_TXD15_P W13
HT_MCP_TXD15_N Y13
17 HT_MCP_RX_CLK0_P AD9 HT_MCP_RX_CLK0_P
17 HT_MCP_RX_CLK0_N AC9 HT_MCP_RX_CLK0_N
U10 HT_MCP_RX_CLK1_P
T10 HT_MCP_RX_CLK1_N
HT_MCP_TX_CLK0_P AC19 HT_MCP_TX_CLK0_P 17
HT_MCP_TX_CLK0_N AD19 HT_MCP_TX_CLK0_N 17
HT_MCP_TX_CLK1_P Y17
HT_MCP_TX_CLK1_N W17
17 HT_MCP_RX_CTL_P AD14 HT_MCP_RXCTL_P
17 HT_MCP_RX_CTL_N AC14 HT_MCP_RXCTL_N
HT_MCP_TXCTL_P AC15 HT_MCP_TX_CTL_P 17
HT_MCP_TXCTL_N AD15 HT_MCP_TX_CTL_N 17
17 HT_MCP_REQ# AB5 HT_MCP_REQ#
17 HT_MCP_STOP# AA5 HT_MCP_STOP#
17 HT_MCP_RST# AC5 HT_MCP_RESET#
17 HT_MCP_PWRGD AD5 HT_MCP_PWRGD
R221
2.37K_1%
CLKOUT_CTERM_GND B22 CLKOUT_CTERM
SCLKIN_MCLKOUT_200MHZ_P A20 TP100
SCLKIN_MCLKOUT_200MHZ_N B20 TP099
19 MCPOUT_25MHZ AC4 CLKIN_25MHZ
+1.2VRUN
R210
150_0402 1%
19 MCPOUT_200MHZ Y5 CLKIN_200MHZ_P
19 MCPOUT_200MHZ# W5 CLKIN_200MHZ_N
HT_MCP_CAL_1P2V AB23 HTMCPCAL_1P2V
HT_MCP_CAL_GND AB24 HTMCPCAL_GND
150_0402 1%
R208
nVIDIA_C51MV

HPCPUCAL_1P2V
HPCPUCAL_GND

Place within 500 mils of ball, route 5/10

HTMCPCAL_1P2V
HTMCPCAL_GND

Place within 500 mils of ball; route 5/5/10.

MSI CORPORATION		
Title **C51MV/D HT CPU/SB**		
Size B	Document Number **MS-16322**	Rev 0A
Date:	Monday, April 10, 2006	Sheet 8 of 40

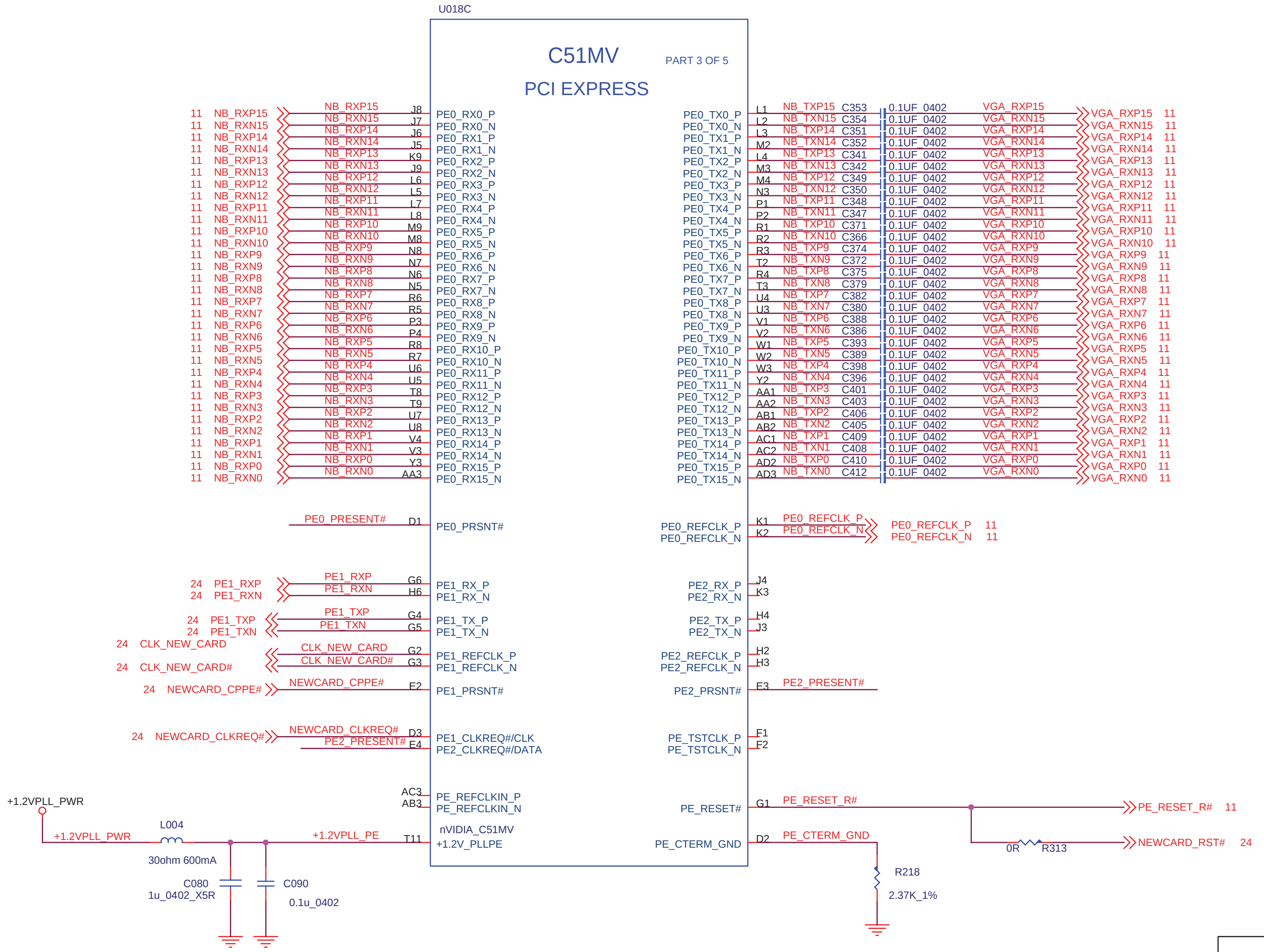
U018C
C51MV
PART 3 OF 5
PCI EXPRESS
11 NB_RXP15 NB_RXP15 J8 PE0_RX0_P
11 NB_RXN15 NB_RXN15 J7 PE0_RX0_N
11 NB_RXP14 NB_RXP14 J6 PE0_RX1_P
11 NB_RXN14 NB_RXN14 J5 PE0_RX1_N
11 NB_RXP13 NB_RXP13 K9 PE0_RX2_P
11 NB_RXN13 NB_RXN13 J9 PE0_RX2_N
11 NB_RXP12 NB_RXP12 L6 PE0_RX3_P
11 NB_RXN12 NB_RXN12 L5 PE0_RX3_N
11 NB_RXP11 NB_RXP11 L7 PE0_RX4_P
11 NB_RXN11 NB_RXN11 L8 PE0_RX4_N
11 NB_RXP10 NB_RXP10 M9 PE0_RX5_P
11 NB_RXN10 NB_RXN10 M8 PE0_RX5_N
11 NB_RXP9 NB_RXP9 N8 PE0_RX6_P
11 NB_RXN9 NB_RXN9 N7 PE0_RX6_N
11 NB_RXP8 NB_RXP8 N6 PE0_RX7_P
11 NB_RXN8 NB_RXN8 N5 PE0_RX7_N
11 NB_RXP7 NB_RXP7 R6 PE0_RX8_P
11 NB_RXN7 NB_RXN7 R5 PE0_RX8_N
11 NB_RXP6 NB_RXP6 P3 PE0_RX9_P
11 NB_RXN6 NB_RXN6 P4 PE0_RX9_N
11 NB_RXP5 NB_RXP5 R8 PE0_RX10_P
11 NB_RXN5 NB_RXN5 R7 PE0_RX10_N
11 NB_RXP4 NB_RXP4 U6 PE0_RX11_P
11 NB_RXN4 NB_RXN4 U5 PE0_RX11_N
11 NB_RXP3 NB_RXP3 T8 PE0_RX12_P
11 NB_RXN3 NB_RXN3 T9 PE0_RX12_N
11 NB_RXP2 NB_RXP2 U7 PE0_RX13_P
11 NB_RXN2 NB_RXN2 U8 PE0_RX13_N
11 NB_RXP1 NB_RXP1 V4 PE0_RX14_P
11 NB_RXN1 NB_RXN1 V3 PE0_RX14_N
11 NB_RXP0 NB_RXP0 Y3 PE0_RX15_P
11 NB_RXN0 NB_RXN0 AA3 PE0_RX15_N
PE0_TX0_P L1 NB_TXP15 C353 0.1UF_0402 VGA_RXP15 VGA_RXP15 11
PE0_TX0_N L2 NB_TXN15 C354 0.1UF_0402 VGA_RXN15 VGA_RXN15 11
PE0_TX1_P L3 NB_TXP14 C351 0.1UF_0402 VGA_RXP14 VGA_RXP14 11
PE0_TX1_N M2 NB_TXN14 C352 0.1UF_0402 VGA_RXN14 VGA_RXN14 11
PE0_TX2_P L4 NB_TXP13 C341 0.1UF_0402 VGA_RXP13 VGA_RXP13 11
PE0_TX2_N M3 NB_TXN13 C342 0.1UF_0402 VGA_RXN13 VGA_RXN13 11
PE0_TX3_P M4 NB_TXP12 C349 0.1UF_0402 VGA_RXP12 VGA_RXP12 11
PE0_TX3_N N3 NB_TXN12 C350 0.1UF_0402 VGA_RXN12 VGA_RXN12 11
PE0_TX4_P P1 NB_TXP11 C348 0.1UF_0402 VGA_RXP11 VGA_RXP11 11
PE0_TX4_N P2 NB_TXN11 C347 0.1UF_0402 VGA_RXN11 VGA_RXN11 11
PE0_TX5_P R1 NB_TXP10 C371 0.1UF_0402 VGA_RXP10 VGA_RXP10 11
PE0_TX5_N R2 NB_TXN10 C366 0.1UF_0402 VGA_RXN10 VGA_RXN10 11
PE0_TX6_P R3 NB_TXP9 C374 0.1UF_0402 VGA_RXP9 VGA_RXP9 11
PE0_TX6_N T2 NB_TXN9 C372 0.1UF_0402 VGA_RXN9 VGA_RXN9 11
PE0_TX7_P R4 NB_TXP8 C375 0.1UF_0402 VGA_RXP8 VGA_RXP8 11
PE0_TX7_N T3 NB_TXN8 C379 0.1UF_0402 VGA_RXN8 VGA_RXN8 11
PE0_TX8_P U4 NB_TXP7 C382 0.1UF_0402 VGA_RXP7 VGA_RXP7 11
PE0_TX8_N U3 NB_TXN7 C380 0.1UF_0402 VGA_RXN7 VGA_RXN7 11
PE0_TX9_P V1 NB_TXP6 C388 0.1UF_0402 VGA_RXP6 VGA_RXP6 11
PE0_TX9_N V2 NB_TXN6 C386 0.1UF_0402 VGA_RXN6 VGA_RXN6 11
PE0_TX10_P W1 NB_TXP5 C393 0.1UF_0402 VGA_RXP5 VGA_RXP5 11
PE0_TX10_N W2 NB_TXN5 C389 0.1UF_0402 VGA_RXN5 VGA_RXN5 11
PE0_TX11_P W3 NB_TXP4 C398 0.1UF_0402 VGA_RXP4 VGA_RXP4 11
PE0_TX11_N Y2 NB_TXN4 C396 0.1UF_0402 VGA_RXN4 VGA_RXN4 11
PE0_TX12_P AA1 NB_TXP3 C401 0.1UF_0402 VGA_RXP3 VGA_RXP3 11
PE0_TX12_N AA2 NB_TXN3 C403 0.1UF_0402 VGA_RXN3 VGA_RXN3 11
PE0_TX13_P AB1 NB_TXP2 C406 0.1UF_0402 VGA_RXP2 VGA_RXP2 11
PE0_TX13_N AB2 NB_TXN2 C405 0.1UF_0402 VGA_RXN2 VGA_RXN2 11
PE0_TX14_P AC1 NB_TXP1 C409 0.1UF_0402 VGA_RXP1 VGA_RXP1 11
PE0_TX14_N AC2 NB_TXN1 C408 0.1UF_0402 VGA_RXN1 VGA_RXN1 11
PE0_TX15_P AD2 NB_TXP0 C410 0.1UF_0402 VGA_RXP0 VGA_RXP0 11
PE0_TX15_N AD3 NB_TXN0 C412 0.1UF_0402 VGA_RXN0 VGA_RXN0 11
PE0_PRESENT# D1 PE0_PRSNT#
PE0_REFCLK_P K1 PE0_REFCLK_P PE0_REFCLK_P 11
PE0_REFCLK_N K2 PE0_REFCLK_N PE0_REFCLK_N 11
24 PE1_RXP PE1_RXP G6 PE1_RX_P
24 PE1_RXN PE1_RXN H6 PE1_RX_N
24 PE1_TXP PE1_TXP G4 PE1_TX_P
24 PE1_TXN PE1_TXN G5 PE1_TX_N
24 CLK_NEW_CARD CLK_NEW_CARD G2 PE1_REFCLK_P
24 CLK_NEW_CARD# CLK_NEW_CARD# G3 PE1_REFCLK_N
24 NEWCARD_CPPE# NEWCARD_CPPE# F2 PE1_PRSNT#
24 NEWCARD_CLKREQ# NEWCARD_CLKREQ# D3 PE1_CLKREQ#/CLK
PE2_PRESENT# E4 PE2_CLKREQ#/DATA
PE2_RX_P J4
PE2_RX_N K3
PE2_TX_P H4
PE2_TX_N J3
PE2_REFCLK_P H2
PE2_REFCLK_N H3
PE2_PRSNT# E3 PE2_PRESENT#
PE_TSTCLK_P F1
PE_TSTCLK_N F2
+3VRUN
PE2_PRESENT# 1 10K R214 2
PE0_PRESENT# 1 10K_NC R042 2
PE0_PRESENT# 1 10K R217 2
AC3 PE_REFCLKIN_P
AB3 PE_REFCLKIN_N
nVIDIA_C51MV
T11 +1.2V_PLLPE
+1.2VPLL_PWR
L004
+1.2VPLL_PWR
30ohm 600mA
+1.2VPLL_PE
C080
1u_0402_X5R
C090
0.1u_0402
PE_RESET# G1 PE_RESET_R#
PE_RESET_R# 11
0R R313
NEWCARD_RST# 24
PE_CTERM_GND D2 PE_CTERM_GND
R218
2.37K_1%

PE_CTERM_GND Place 2.37 kΩ 1% pull down to GND
within 500 mils of C51

MSI CORPORATION

Title
C51MV/D PCI-E GRAPH

Size	Document Number	Rev
B	**MS-16322**	0A

Date: Monday, April 10, 2006 Sheet 9 of 40

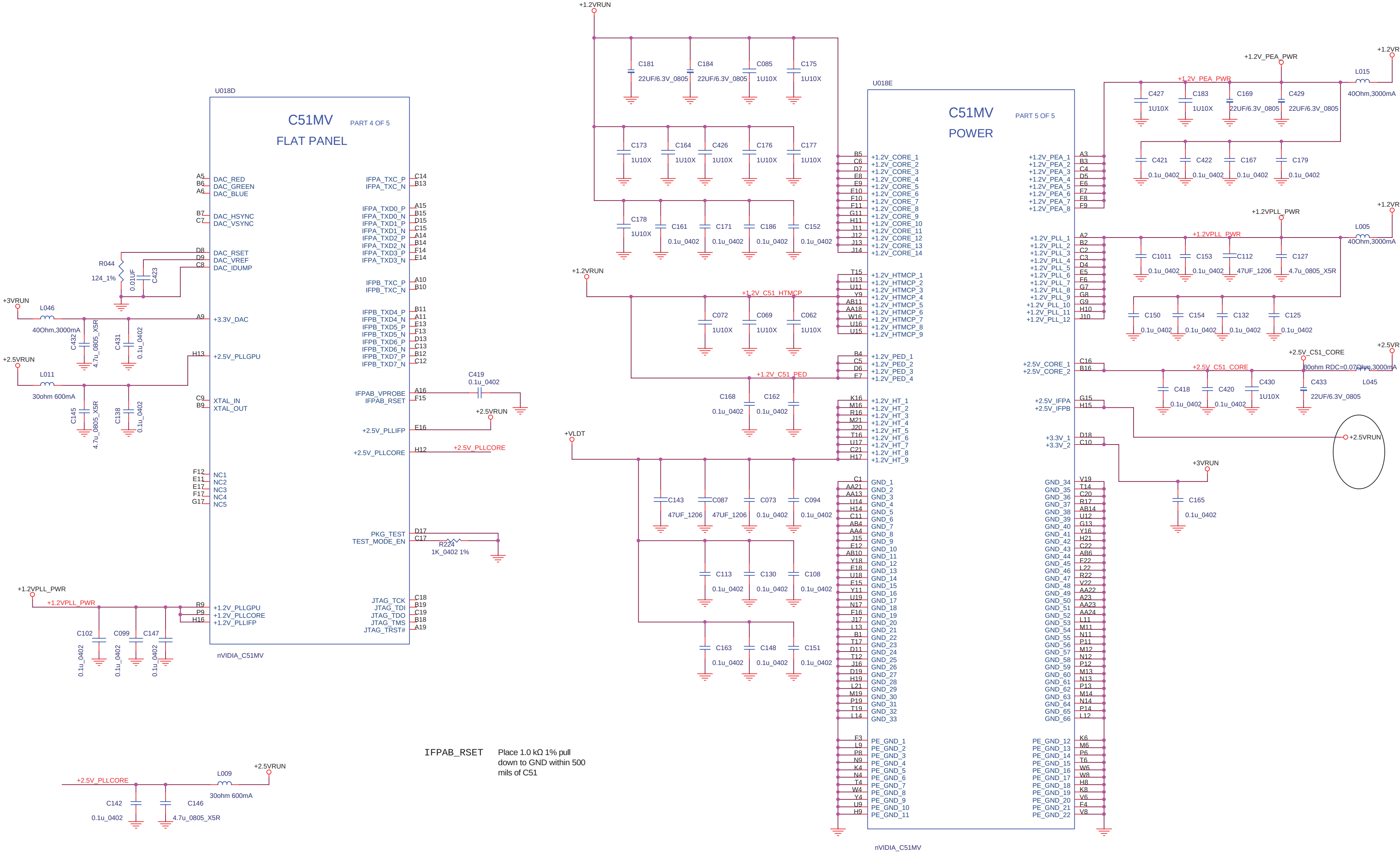
U018D
C51MV
PART 4 OF 5
FLAT PANEL
A5 DAC_RED
B6 DAC_GREEN
A6 DAC_BLUE
B7 DAC_HSYNC
C7 DAC_VSYNC
D8 DAC_RSET
D9 DAC_VREF
C8 DAC_IDUMP
R044
124_1%
0.01UF
C423
+3VRUN
L046
40Ohm,3000mA
C432
4.7u_0805_X5R
C431
0.1u_0402
A9 +3.3V_DAC
+2.5VRUN
L011
30ohm 600mA
H13 +2.5V_PLLGPU
C145
4.7u_0805_X5R
C138
0.1u_0402
C9 XTAL_IN
B9 XTAL_OUT
F12 NC1
E11 NC2
E17 NC3
F17 NC4
G17 NC5
IFPA_TXC_P C14
IFPA_TXC_N B13
IFPA_TXD0_P A15
IFPA_TXD0_N B15
IFPA_TXD1_P D15
IFPA_TXD1_N C15
IFPA_TXD2_P A14
IFPA_TXD2_N B14
IFPA_TXD3_P F14
IFPA_TXD3_N E14
IFPB_TXC_P A10
IFPB_TXC_N B10
IFPB_TXD4_P B11
IFPB_TXD4_N A11
IFPB_TXD5_P E13
IFPB_TXD5_N F13
IFPB_TXD6_P D13
IFPB_TXD6_N C13
IFPB_TXD7_P B12
IFPB_TXD7_N C12
C419
0.1u_0402
IFPAB_VPROBE A16
IFPAB_RSET F15
+2.5VRUN
+2.5V_PLLIFP E16
+2.5V_PLLCORE H12
+2.5V_PLLCORE
PKG_TEST D17
TEST_MODE_EN C17
R224
1K_0402 1%
+1.2VPLL_PWR
+1.2VPLL_PWR
R9 +1.2V_PLLGPU
P9 +1.2V_PLLCORE
H16 +1.2V_PLLIFP
C102
C099
C147
0.1u_0402
0.1u_0402
0.1u_0402
JTAG_TCK C18
JTAG_TDI B19
JTAG_TDO C19
JTAG_TMS B18
JTAG_TRST# A19
nVIDIA_C51MV
+2.5V_PLLCORE
L009
+2.5VRUN
30ohm 600mA
C142
0.1u_0402
C146
4.7u_0805_X5R
+1.2VRUN
C181 22UF/6.3V_0805
C184 22UF/6.3V_0805
C085 1U10X
C175 1U10X
C173 1U10X
C164 1U10X
C426 1U10X
C176 1U10X
C177 1U10X
C178 1U10X
C161 0.1u_0402
C171 0.1u_0402
C186 0.1u_0402
C152 0.1u_0402
+1.2VRUN
+1.2V_C51_HTMCP
C072 1U10X
C069 1U10X
C062 1U10X
+1.2V_C51_PED
C168 0.1u_0402
C162 0.1u_0402
+VLDT
C143 47UF_1206
C087 47UF_1206
C073 0.1u_0402
C094 0.1u_0402
C113 0.1u_0402
C130 0.1u_0402
C108 0.1u_0402
C163 0.1u_0402
C148 0.1u_0402
C151 0.1u_0402
U018E
C51MV
PART 5 OF 5
POWER
B5 +1.2V_CORE_1
C6 +1.2V_CORE_2
D7 +1.2V_CORE_3
E8 +1.2V_CORE_4
E9 +1.2V_CORE_5
E10 +1.2V_CORE_6
F10 +1.2V_CORE_7
F11 +1.2V_CORE_8
G11 +1.2V_CORE_9
H11 +1.2V_CORE_10
J11 +1.2V_CORE_11
J12 +1.2V_CORE_12
J13 +1.2V_CORE_13
J14 +1.2V_CORE_14
T15 +1.2V_HTMCP_1
U13 +1.2V_HTMCP_2
U11 +1.2V_HTMCP_3
Y9 +1.2V_HTMCP_4
AB11 +1.2V_HTMCP_5
AA18 +1.2V_HTMCP_6
W16 +1.2V_HTMCP_7
U16 +1.2V_HTMCP_8
U15 +1.2V_HTMCP_9
B4 +1.2V_PED_1
C5 +1.2V_PED_2
D6 +1.2V_PED_3
E7 +1.2V_PED_4
K16 +1.2V_HT_1
M16 +1.2V_HT_2
R16 +1.2V_HT_3
M21 +1.2V_HT_4
J20 +1.2V_HT_5
T16 +1.2V_HT_6
U17 +1.2V_HT_7
C21 +1.2V_HT_8
H17 +1.2V_HT_9
C1 GND_1
AA21 GND_2
AA13 GND_3
U14 GND_4
H14 GND_5
C11 GND_6
AB4 GND_7
AA4 GND_8
J15 GND_9
E12 GND_10
AB10 GND_11
Y18 GND_12
E18 GND_13
U18 GND_14
E15 GND_15
Y11 GND_16
U19 GND_17
N17 GND_18
F16 GND_19
J17 GND_20
L13 GND_21
B1 GND_22
T17 GND_23
D11 GND_24
T12 GND_25
J16 GND_26
D19 GND_27
H19 GND_28
L21 GND_29
M19 GND_30
P19 GND_31
T19 GND_32
L14 GND_33
F3 PE_GND_1
L9 PE_GND_2
P8 PE_GND_3
N9 PE_GND_4
K4 PE_GND_5
N4 PE_GND_6
T4 PE_GND_7
W4 PE_GND_8
Y4 PE_GND_9
U9 PE_GND_10
H9 PE_GND_11
nVIDIA_C51MV
+1.2V_PEA_1 A3
+1.2V_PEA_2 B3
+1.2V_PEA_3 C4
+1.2V_PEA_4 D5
+1.2V_PEA_5 E6
+1.2V_PEA_6 F7
+1.2V_PEA_7 F8
+1.2V_PEA_8 F9
+1.2V_PLL_1 A2
+1.2V_PLL_2 B2
+1.2V_PLL_3 C2
+1.2V_PLL_4 C3
+1.2V_PLL_5 D4
+1.2V_PLL_6 E5
+1.2V_PLL_7 F6
+1.2V_PLL_8 G7
+1.2V_PLL_9 G8
+1.2V_PLL_10 G9
+1.2V_PLL_11 H10
+1.2V_PLL_12 J10
+2.5V_CORE_1 C16
+2.5V_CORE_2 B16
+2.5V_IFPA G15
+2.5V_IFPB H15
+3.3V_1 D18
+3.3V_2 C10
GND_34 V19
GND_35 T14
GND_36 C20
GND_37 R17
GND_38 AB14
GND_39 U12
GND_40 G13
GND_41 Y16
GND_42 H21
GND_43 C22
GND_44 AB6
GND_45 F22
GND_46 L22
GND_47 R22
GND_48 V22
GND_49 AA22
GND_50 A23
GND_51 AA23
GND_52 AA24
GND_53 L11
GND_54 M11
GND_55 N11
GND_56 P11
GND_57 M12
GND_58 N12
GND_59 P12
GND_60 M13
GND_61 N13
GND_62 P13
GND_63 M14
GND_64 N14
GND_65 P14
GND_66 L12
PE_GND_12 K6
PE_GND_13 M6
PE_GND_14 P6
PE_GND_15 T6
PE_GND_16 W6
PE_GND_17 W8
PE_GND_18 H8
PE_GND_19 K8
PE_GND_20 V6
PE_GND_21 F4
PE_GND_22 V8
+1.2V_PEA_PWR
+1.2VRUN
L015
40Ohm,3000mA
+1.2V_PEA_PWR
C427 1U10X
C183 1U10X
C169 22UF/6.3V_0805
C429 22UF/6.3V_0805
C421 0.1u_0402
C422 0.1u_0402
C167 0.1u_0402
C179 0.1u_0402
+1.2VPLL_PWR
+1.2VRUN
L005
40Ohm,3000mA
+1.2VPLL_PWR
C1011 0.1u_0402
C153 0.1u_0402
C112 47UF_1206
C127 4.7u_0805_X5R
C150 0.1u_0402
C154 0.1u_0402
C132 0.1u_0402
C125 0.1u_0402
+2.5VRUN
+2.5V_C51_CORE
80ohm RDC=0.07Ohm,3000mA
L045
+2.5V_C51_CORE
C418 0.1u_0402
C420 0.1u_0402
C430 1U10X
C433 22UF/6.3V_0805
+2.5VRUN
+3VRUN
C165
0.1u_0402

IFPAB_RSET Place 1.0 kΩ 1% pull down to GND within 500 mils of C51

MSI CORPORATION

Title
C51MV/D POWER

Size C
Document Number **MS-16322**
Rev 0A

Date: Monday, April 10, 2006
Sheet 10 of 40

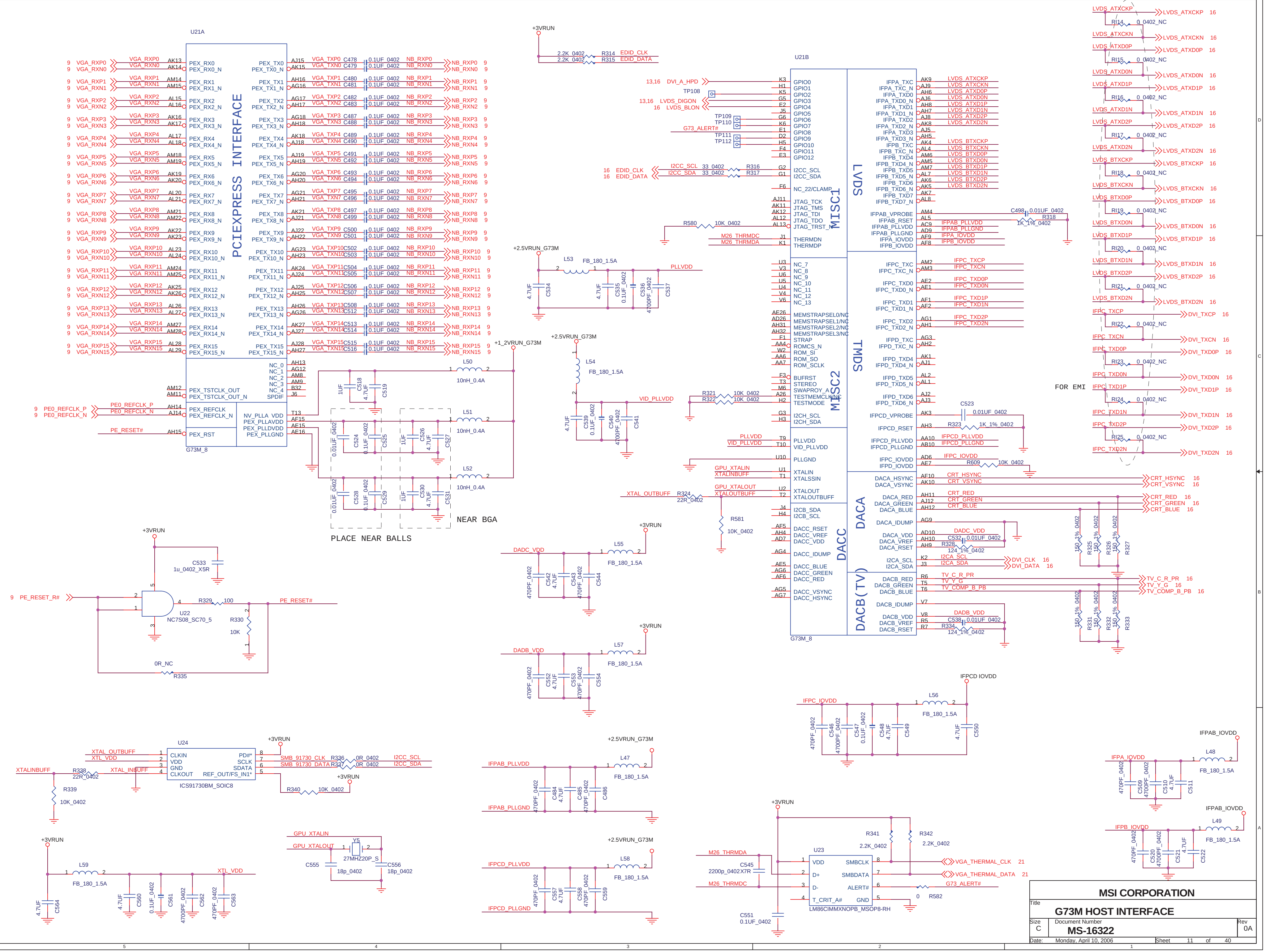
U21A
PCIEXPRESS INTERFACE
9 VGA_RXP0 / VGA_RXN0 … 9 VGA_RXP15 / VGA_RXN15
AK13 AK14 AM14 AM15 AL15 AL16 AK16 AK17 AL17 AL18 AM18 AM19 AK19 AK20 AL20 AL21 AM21 AM22 AK22 AK23 AL23 AL24 AM24 AM25 AK25 AK26 AL26 AL27 AM27 AM28 AL28 AL29
PEX_RX0 PEX_RX0_N … PEX_RX15 PEX_RX15_N
PEX_TX0 PEX_TX0_N … PEX_TX15 PEX_TX15_N
AJ15 AK15 AH16 AG16 AG17 AH17 AG18 AH18 AK18 AJ18 AJ19 AH19 AG20 AH20 AG21 AH21 AK21 AJ21 AJ22 AH22 AG23 AH23 AK24 AJ24 AJ25 AH25 AH26 AG26 AK27 AJ27 AJ28 AH27
VGA_TXP0 … VGA_TXN15
C478 C479 C480 C481 C482 C483 C487 C488 C489 C490 C491 C492 C493 C494 C495 C496 C497 C499 C500 C501 C502 C503 C504 C505 C506 C507 C508 C512 C513 C514 C515 C516
0.1UF_0402
NB_RXP0 NB_RXN0 … NB_RXP15 NB_RXN15 9
NC_0 NC_1 NC_2 NC_3 NC_4 SPDIF AH13 AG12 AM8 AM9 B32 J6
AM12 AM11 PEX_TSTCLK_OUT PEX_TSTCLK_OUT_N
9 PE0_REFCLK_P 9 PE0_REFCLK_N AH14 AJ14 PEX_REFCLK PEX_REFCLK_N
PE_RESET# AH15 PEX_RST
NV_PLLA_VDD PEX_PLLAVDD PEX_PLLDVDD PEX_PLLGND T13 AF15 AE15 AE16
G73M_8
+1_2VRUN_G73M
L50 10nH_0.4A L51 10nH_0.4A L52 10nH_0.4A
1UF C518 4.7UF C519
0.01UF_0402 C524 0.1UF_0402 C525 1UF C526 4.7UF C527
0.01UF_0402 C528 0.1UF_0402 C529 1UF C530 4.7UF C531
PLACE NEAR BALLS
NEAR BGA
+3VRUN
2.2K_0402 R314 EDID_CLK
2.2K_0402 R315 EDID_DATA
+2.5VRUN_G73M
L53 FB_180_1.5A PLLVDD
4.7UF C534 4.7UF C535 0.1UF_0402 C536 4700PF_0402 C537
L54 FB_180_1.5A VID_PLLVDD
4.7UF C539 0.1UF_0402 C540 4700PF_0402 C541
U21B
13,16 DVI_A_HPD
TP108
13,16 LVDS_DIGON
16 LVDS_BLON
TP109 TP110 TP111 TP112
G73_ALERT#
K3 H1 K5 G5 E2 J5 G6 K6 E1 D2 H5 F4 E3
GPIO0 GPIO1 GPIO2 GPIO3 GPIO4 GPIO5 GPIO6 GPIO7 GPIO8 GPIO9 GPIO10 GPIO11 GPIO12
16 EDID_CLK 16 EDID_DATA I2CC_SCL I2CC_SDA 33_0402 R316 R317 G2 G1 I2CC_SCL I2CC_SDA
F6 NC_22/CLAMP
AJ11 AK11 AK12 AL12 AL13 JTAG_TCK JTAG_TMS JTAG_TDI JTAG_TDO JTAG_TRST_N
R580 10K_0402
M26_THRMDC M26_THRMDA J1 K1 THERMDN THERMDP
MISC1
U3 V3 U6 U5 U4 V4 V6 NC_7 NC_8 NC_9 NC_10 NC_11 NC_12 NC_13
AE26 AD26 AH31 AH32 F1 AA4 W2 AA6 AA7
MEMSTRAPSEL0/NC MEMSTRAPSEL1/NC MEMSTRAPSEL2/NC MEMSTRAPSEL3/NC STRAP ROMCS_N ROM_SI ROM_SO ROM_SCLK
F3 T3 M6 A26 H2 BUFRST STEREO SWAPROY_A TESTMEMCLK/NC TESTMODE
R321 10K_0402 R322 10K_0402
G3 H3 I2CH_SCL I2CH_SDA
MISC2
PLLVDD VID_PLLVDD T9 T10 PLLVDD VID_PLLVDD
U10 PLLGND
GPU_XTALIN XTALINBUFF U1 T1 XTALIN XTALSSIN
GPU_XTALOUT XTALOUTBUFF U2 T2 XTALOUT XTALOUTBUFF
XTAL_OUTBUFF R324 22R_0402
R581 10K_0402
J4 H4 I2CB_SDA I2CB_SCL
AF5 AH4 AD7 DACC_RSET DACC_VREF DACC_VDD
AG4 DACC_IDUMP
AE5 AG6 AF6 DACC_BLUE DACC_GREEN DACC_RED
AG5 AG7 DACC_VSYNC DACC_HSYNC
DACC
G73M_8
LVDS
IFPA_TXC IFPA_TXC_N IFPA_TXD0 IFPA_TXD0_N IFPA_TXD1 IFPA_TXD1_N IFPA_TXD2 IFPA_TXD2_N IFPA_TXD3 IFPA_TXD3_N
IFPB_TXC IFPB_TXC_N IFPB_TXD4 IFPB_TXD4_N IFPB_TXD5 IFPB_TXD5_N IFPB_TXD6 IFPB_TXD6_N IFPB_TXD7 IFPB_TXD7_N
AK9 AJ9 AH6 AJ6 AH8 AH7 AJ8 AK8 AJ5 AH5 AK4 AL4 AM6 AM5 AM7 AL7 AK6 AK5 AK7 AL8
LVDS_ATXCKP LVDS_ATXCKN LVDS_ATXD0P LVDS_ATXD0N LVDS_ATXD1P LVDS_ATXD1N LVDS_ATXD2P LVDS_ATXD2N
LVDS_BTXCKP LVDS_BTXCKN LVDS_BTXD0P LVDS_BTXD0N LVDS_BTXD1P LVDS_BTXD1N LVDS_BTXD2P LVDS_BTXD2N
IFPAB_VPROBE IFPAB_RSET IFPAB_PLLVDD IFPAB_PLLGND IFPA_IOVDD IFPB_IOVDD AM4 AL5 AC9 AD9 AF9 AF8
C498 0.01UF_0402 R318 1K_1%_0402
IFPAB_PLLVDD IFPAB_PLLGND IFPA_IOVDD IFPB_IOVDD
TMDS
IFPC_TXC IFPC_TXC_N IFPC_TXD0 IFPC_TXD0_N IFPC_TXD1 IFPC_TXD1_N IFPC_TXD2 IFPC_TXD2_N
AM2 AM3 AE2 AE1 AF1 AF2 AG1 AH1
IFPC_TXCP IFPC_TXCN IFPC_TXD0P IFPC_TXD0N IFPC_TXD1P IFPC_TXD1N IFPC_TXD2P IFPC_TXD2N
IFPD_TXC IFPD_TXC_N IFPD_TXD4 IFPD_TXD4_N IFPD_TXD5 IFPD_TXD5_N IFPD_TXD6 IFPD_TXD6_N
AG3 AH2 AK1 AJ1 AL2 AL1 AJ2 AJ3
IFPCD_VPROBE AK3 C523 0.01UF_0402
IFPCD_RSET AH3 R323 1K_1%_0402
IFPCD_PLLVDD IFPCD_PLLGND AA10 AB10
IFPC_IOVDD IFPD_IOVDD AD6 AE7 IFPC_IOVDD R609 10K_0402
DACA
DACA_HSYNC DACA_VSYNC AF10 AK10 CRT_HSYNC CRT_VSYNC
DACA_RED DACA_GREEN DACA_BLUE AH11 AJ12 AH12 CRT_RED CRT_GREEN CRT_BLUE
DACA_IDUMP AG9
DACA_VDD DACA_VREF DACA_RSET AD10 AH10 AH9 DADC_VDD C532 0.01UF_0402 R328 124_1%_0402
I2CA_SCL I2CA_SDA K2 J3 I2CA_SCL I2CA_SDA DVI_CLK 16 DVI_DATA 16
DACB(TV)
DACB_RED DACB_GREEN DACB_BLUE R6 T5 T6 TV_C_R_PR TV_Y_G TV_COMP_B_PB
DACB_IDUMP V7
DACB_VDD DACB_VREF DACB_RSET V8 R5 R7 DADB_VDD C538 0.01UF_0402 R334 124_1%_0402
CRT_HSYNC 16 CRT_VSYNC 16 CRT_RED 16 CRT_GREEN 16 CRT_BLUE 16
150_1%_0402 R325 R326 R327
TV_C_R_PR 16 TV_Y_G 16 TV_COMP_B_PB 16
150_1%_0402 R331 R332 R333
LVDS_ATXCKP 16 LVDS_ATXCKN 16 LVDS_ATXD0P 16 LVDS_ATXD0N 16 LVDS_ATXD1P 16 LVDS_ATXD1N 16 LVDS_ATXD2P 16 LVDS_ATXD2N 16
LVDS_BTXCKP 16 LVDS_BTXCKN 16 LVDS_BTXD0P 16 LVDS_BTXD0N 16 LVDS_BTXD1P 16 LVDS_BTXD1N 16 LVDS_BTXD2P 16 LVDS_BTXD2N 16
RI14 RI15 RI16 RI17 RI18 RI19 RI20 RI21 RI22 RI23 RI24 RI25 0_0402_NC
DVI_TXCP 16 DVI_TXCN 16 DVI_TXD0P 16 DVI_TXD0N 16 DVI_TXD1P 16 DVI_TXD1N 16 DVI_TXD2P 16 DVI_TXD2N 16
FOR EMI
+3VRUN
C533 1u_0402_X5R
9 PE_RESET_R#
U22 NC7S08_SC70_5
R329 100 PE_RESET#
R330 10K
0R_NC R335
+3VRUN L55 FB_180_1.5A DADC_VDD
470PF_0402 C542 4.7UF C543 470PF_0402 C544
+3VRUN L57 FB_180_1.5A DADB_VDD
470PF_0402 C552 4.7UF C553 470PF_0402 C554
U24
XTAL_OUTBUFF XTL_VDD
XTALINBUFF R338 22R_0402 XTAL_INBUFF
R339 10K_0402
CLKIN VDD GND CLKOUT PD#* SCLK SDATA REF_OUT/FS_IN1*
ICS91730BM_SOIC8
+3VRUN
SMB_91730_CLK R336 0R_0402 I2CC_SCL
SMB_91730_DATA R337 0R_0402 I2CC_SDA
R340 10K_0402
+3VRUN L59 FB_180_1.5A XTL_VDD
4.7UF C564 4.7UF C560 0.1UF_0402 C561 4700PF_0402 C562 470PF_0402 C563
GPU_XTALIN GPU_XTALOUT Y5 27MHZ20P_S
C555 18p_0402 C556 18p_0402
+2.5VRUN_G73M L47 FB_180_1.5A IFPAB_PLLVDD
470PF_0402 C484 4.7UF C485 470PF_0402 C486
IFPAB_PLLGND
+2.5VRUN_G73M L58 FB_180_1.5A IFPCD_PLLVDD
470PF_0402 C557 4.7UF C558 470PF_0402 C559
IFPCD_PLLGND
IFPCD IOVDD L56 FB_180_1.5A IFPC_IOVDD
470PF_0402 C546 4700PF_0402 C547 0.1UF_0402 C548 4.7UF C549 4.7UF C550
+3VRUN
R341 2.2K_0402 R342 2.2K_0402
U23
M26_THRMDA C545 2200p_0402X7R M26_THRMDC
VDD D+ D- T_CRIT_A# SMBCLK SMBDATA ALERT# GND
LM86CIMMXNOPB_MSOP8-RH
C551 0.1UF_0402
VGA_THERMAL_CLK 21 VGA_THERMAL_DATA 21
G73_ALERT# 0 R582
IFPAB_IOVDD L48 FB_180_1.5A IFPA_IOVDD
470PF_0402 C509 4700PF_0402 C510 4.7UF C511
IFPAB_IOVDD L49 FB_180_1.5A IFPB_IOVDD
470PF_0402 C520 4700PF_0402 C521 4.7UF C522
5 4 3 2 1
D C B A

MSI CORPORATION

Title

G73M HOST INTERFACE

Size	Document Number	Rev
C	**MS-16322**	0A

Date: Monday, April 10, 2006 Sheet 11 of 40

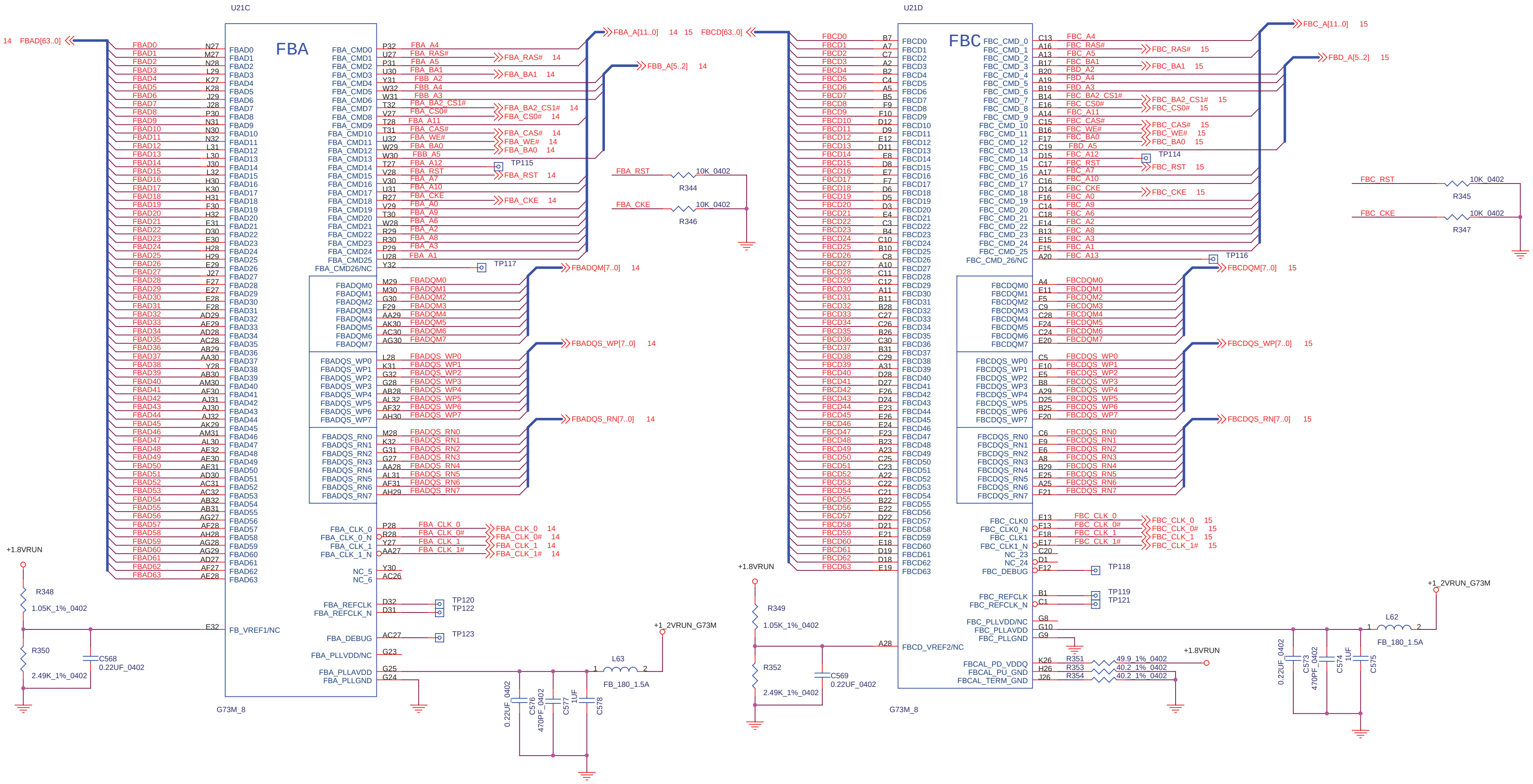
U21C
FBA
14 FBAD[63..0]
FBAD0 N27 FBAD0
FBAD1 M27 FBAD1
FBAD2 N28 FBAD2
FBAD3 L29 FBAD3
FBAD4 K27 FBAD4
FBAD5 K28 FBAD5
FBAD6 J29 FBAD6
FBAD7 J28 FBAD7
FBAD8 P30 FBAD8
FBAD9 N31 FBAD9
FBAD10 N30 FBAD10
FBAD11 N32 FBAD11
FBAD12 L31 FBAD12
FBAD13 L30 FBAD13
FBAD14 J30 FBAD14
FBAD15 L32 FBAD15
FBAD16 H30 FBAD16
FBAD17 K30 FBAD17
FBAD18 H31 FBAD18
FBAD19 F30 FBAD19
FBAD20 H32 FBAD20
FBAD21 E31 FBAD21
FBAD22 D30 FBAD22
FBAD23 E30 FBAD23
FBAD24 H28 FBAD24
FBAD25 H29 FBAD25
FBAD26 E29 FBAD26
FBAD27 J27 FBAD27
FBAD28 F27 FBAD28
FBAD29 E27 FBAD29
FBAD30 E28 FBAD30
FBAD31 F28 FBAD31
FBAD32 AD29 FBAD32
FBAD33 AE29 FBAD33
FBAD34 AD28 FBAD34
FBAD35 AC28 FBAD35
FBAD36 AB29 FBAD36
FBAD37 AA30 FBAD37
FBAD38 Y28 FBAD38
FBAD39 AB30 FBAD39
FBAD40 AM30 FBAD40
FBAD41 AF30 FBAD41
FBAD42 AJ31 FBAD42
FBAD43 AJ30 FBAD43
FBAD44 AJ32 FBAD44
FBAD45 AK29 FBAD45
FBAD46 AM31 FBAD46
FBAD47 AL30 FBAD47
FBAD48 AE32 FBAD48
FBAD49 AE30 FBAD49
FBAD50 AE31 FBAD50
FBAD51 AD30 FBAD51
FBAD52 AC31 FBAD52
FBAD53 AC32 FBAD53
FBAD54 AB32 FBAD54
FBAD55 AB31 FBAD55
FBAD56 AG27 FBAD56
FBAD57 AF28 FBAD57
FBAD58 AH28 FBAD58
FBAD59 AG28 FBAD59
FBAD60 AG29 FBAD60
FBAD61 AD27 FBAD61
FBAD62 AF27 FBAD62
FBAD63 AE28 FBAD63
FBA_CMD0 P32 FBA_A4
FBA_CMD1 U27 FBA_RAS#
FBA_CMD2 P31 FBA_A5
FBA_CMD3 U30 FBA_BA1
FBA_CMD4 Y31 FBB_A2
FBA_CMD5 W32 FBB_A4
FBA_CMD6 W31 FBB_A3
FBA_CMD7 T32 FBA_BA2_CS1#
FBA_CMD8 V27 FBA_CS0#
FBA_CMD9 T28 FBA_A11
FBA_CMD10 T31 FBA_CAS#
FBA_CMD11 U32 FBA_WE#
FBA_CMD12 W29 FBA_BA0
FBA_CMD13 W30 FBB_A5
FBA_CMD14 T27 FBA_A12
FBA_CMD15 V28 FBA_RST
FBA_CMD16 V30 FBA_A7
FBA_CMD17 U31 FBA_A10
FBA_CMD18 R27 FBA_CKE
FBA_CMD19 V29 FBA_A0
FBA_CMD20 T30 FBA_A9
FBA_CMD21 W28 FBA_A6
FBA_CMD22 R29 FBA_A2
FBA_CMD23 R30 FBA_A8
FBA_CMD24 P29 FBA_A3
FBA_CMD25 U28 FBA_A1
FBA_CMD26/NC Y32
TP115
TP117
FBA_A[11..0] 14 15
FBB_A[5..2] 14
FBA_RAS# 14
FBA_BA1 14
FBA_BA2_CS1# 14
FBA_CS0# 14
FBA_CAS# 14
FBA_WE# 14
FBA_BA0 14
FBA_RST 14
FBA_CKE 14
FBADQM0 M29 FBADQM0
FBADQM1 M30 FBADQM1
FBADQM2 G30 FBADQM2
FBADQM3 F29 FBADQM3
FBADQM4 AA29 FBADQM4
FBADQM5 AK30 FBADQM5
FBADQM6 AC30 FBADQM6
FBADQM7 AG30 FBADQM7
FBADQM[7..0] 14
FBADQS_WP0 L28 FBADQS_WP0
FBADQS_WP1 K31 FBADQS_WP1
FBADQS_WP2 G32 FBADQS_WP2
FBADQS_WP3 G28 FBADQS_WP3
FBADQS_WP4 AB28 FBADQS_WP4
FBADQS_WP5 AL32 FBADQS_WP5
FBADQS_WP6 AF32 FBADQS_WP6
FBADQS_WP7 AH30 FBADQS_WP7
FBADQS_WP[7..0] 14
FBADQS_RN0 M28 FBADQS_RN0
FBADQS_RN1 K32 FBADQS_RN1
FBADQS_RN2 G31 FBADQS_RN2
FBADQS_RN3 G27 FBADQS_RN3
FBADQS_RN4 AA28 FBADQS_RN4
FBADQS_RN5 AL31 FBADQS_RN5
FBADQS_RN6 AF31 FBADQS_RN6
FBADQS_RN7 AH29 FBADQS_RN7
FBADQS_RN[7..0] 14
FBA_CLK_0 P28 FBA_CLK_0 FBA_CLK_0 14
FBA_CLK_0_N R28 FBA_CLK_0# FBA_CLK_0# 14
FBA_CLK_1 Y27 FBA_CLK_1 FBA_CLK_1 14
FBA_CLK_1_N AA27 FBA_CLK_1# FBA_CLK_1# 14
NC_5 Y30
NC_6 AC26
FBA_REFCLK D32 TP120
FBA_REFCLK_N D31 TP122
FB_VREF1/NC E32
FBA_DEBUG AC27 TP123
FBA_PLLVDD/NC G23
FBA_PLLAVDD G25
FBA_PLLGND G24
G73M_8
+1.8VRUN
R348
1.05K_1%_0402
R350
2.49K_1%_0402
C568
0.22UF_0402
C576 0.22UF_0402
C577 470PF_0402
C578 1UF
L63
1 2
FB_180_1.5A
+1_2VRUN_G73M
FBA_RST 10K_0402 R344
FBA_CKE 10K_0402 R346
U21D
FBC
FBCD[63..0]
FBCD0 B7 FBCD0
FBCD1 A7 FBCD1
FBCD2 C7 FBCD2
FBCD3 A2 FBCD3
FBCD4 B2 FBCD4
FBCD5 C4 FBCD5
FBCD6 A5 FBCD6
FBCD7 B5 FBCD7
FBCD8 F9 FBCD8
FBCD9 F10 FBCD9
FBCD10 D12 FBCD10
FBCD11 D9 FBCD11
FBCD12 E12 FBCD12
FBCD13 D11 FBCD13
FBCD14 E8 FBCD14
FBCD15 D8 FBCD15
FBCD16 E7 FBCD16
FBCD17 F7 FBCD17
FBCD18 D6 FBCD18
FBCD19 D5 FBCD19
FBCD20 D3 FBCD20
FBCD21 E4 FBCD21
FBCD22 C3 FBCD22
FBCD23 B4 FBCD23
FBCD24 C10 FBCD24
FBCD25 B10 FBCD25
FBCD26 C8 FBCD26
FBCD27 A10 FBCD27
FBCD28 C11 FBCD28
FBCD29 C12 FBCD29
FBCD30 A11 FBCD30
FBCD31 B11 FBCD31
FBCD32 B28 FBCD32
FBCD33 C27 FBCD33
FBCD34 C26 FBCD34
FBCD35 B26 FBCD35
FBCD36 C30 FBCD36
FBCD37 B31 FBCD37
FBCD38 C29 FBCD38
FBCD39 A31 FBCD39
FBCD40 D28 FBCD40
FBCD41 D27 FBCD41
FBCD42 F26 FBCD42
FBCD43 D24 FBCD43
FBCD44 E23 FBCD44
FBCD45 E26 FBCD45
FBCD46 E24 FBCD46
FBCD47 F23 FBCD47
FBCD48 B23 FBCD48
FBCD49 A23 FBCD49
FBCD50 C25 FBCD50
FBCD51 C23 FBCD51
FBCD52 A22 FBCD52
FBCD53 C22 FBCD53
FBCD54 C21 FBCD54
FBCD55 B22 FBCD55
FBCD56 E22 FBCD56
FBCD57 D22 FBCD57
FBCD58 D21 FBCD58
FBCD59 E21 FBCD59
FBCD60 E18 FBCD60
FBCD61 D19 FBCD61
FBCD62 D18 FBCD62
FBCD63 E19 FBCD63
FBC_CMD_0 C13 FBC_A4
FBC_CMD_1 A16 FBC_RAS#
FBC_CMD_2 A13 FBC_A5
FBC_CMD_3 B17 FBC_BA1
FBC_CMD_4 B20 FBD_A2
FBC_CMD_5 A19 FBD_A4
FBC_CMD_6 B19 FBD_A3
FBC_CMD_7 B14 FBC_BA2_CS1#
FBC_CMD_8 E16 FBC_CS0#
FBC_CMD_9 A14 FBC_A11
FBC_CMD_10 C15 FBC_CAS#
FBC_CMD_11 B16 FBC_WE#
FBC_CMD_12 F17 FBC_BA0
FBC_CMD_13 C19 FBD_A5
FBC_CMD_14 D15 FBC_A12
FBC_CMD_15 C17 FBC_RST
FBC_CMD_16 A17 FBC_A7
FBC_CMD_17 C16 FBC_A10
FBC_CMD_18 D14 FBC_CKE
FBC_CMD_19 F16 FBC_A0
FBC_CMD_20 C14 FBC_A9
FBC_CMD_21 C18 FBC_A6
FBC_CMD_22 E14 FBC_A2
FBC_CMD_23 B13 FBC_A8
FBC_CMD_24 E15 FBC_A3
FBC_CMD_25 F15 FBC_A1
FBC_CMD_26/NC A20 FBC_A13
TP114
TP116
FBC_A[11..0] 15
FBD_A[5..2] 15
FBC_RAS# 15
FBC_BA1 15
FBC_BA2_CS1# 15
FBC_CS0# 15
FBC_CAS# 15
FBC_WE# 15
FBC_BA0 15
FBC_RST 15
FBC_CKE 15
FBCDQM0 A4 FBCDQM0
FBCDQM1 E11 FBCDQM1
FBCDQM2 F5 FBCDQM2
FBCDQM3 C9 FBCDQM3
FBCDQM4 C28 FBCDQM4
FBCDQM5 F24 FBCDQM5
FBCDQM6 C24 FBCDQM6
FBCDQM7 E20 FBCDQM7
FBCDQM[7..0] 15
FBCDQS_WP0 C5 FBCDQS_WP0
FBCDQS_WP1 E10 FBCDQS_WP1
FBCDQS_WP2 E5 FBCDQS_WP2
FBCDQS_WP3 B8 FBCDQS_WP3
FBCDQS_WP4 A29 FBCDQS_WP4
FBCDQS_WP5 D25 FBCDQS_WP5
FBCDQS_WP6 B25 FBCDQS_WP6
FBCDQS_WP7 F20 FBCDQS_WP7
FBCDQS_WP[7..0] 15
FBCDQS_RN0 C6 FBCDQS_RN0
FBCDQS_RN1 F9 FBCDQS_RN1
FBCDQS_RN2 F6 FBCDQS_RN2
FBCDQS_RN3 A8 FBCDQS_RN3
FBCDQS_RN4 B29 FBCDQS_RN4
FBCDQS_RN5 E25 FBCDQS_RN5
FBCDQS_RN6 A25 FBCDQS_RN6
FBCDQS_RN7 F21 FBCDQS_RN7
FBCDQS_RN[7..0] 15
FBC_CLK0 E13 FBC_CLK_0 FBC_CLK_0 15
FBC_CLK0_N F13 FBC_CLK_0# FBC_CLK_0# 15
FBC_CLK1 F18 FBC_CLK_1 FBC_CLK_1 15
FBC_CLK1_N E17 FBC_CLK_1# FBC_CLK_1# 15
NC_23 C20
NC_24 D1
FBC_DEBUG F12 TP118
FBC_REFCLK B1 TP119
FBC_REFCLK_N C1 TP121
FBC_PLLVDD/NC G8
FBC_PLLAVDD G10
FBC_PLLGND G9
FBCD_VREF2/NC A28
FBCAL_PD_VDDQ K26 R351 49.9_1%_0402
FBCAL_PU_GND H26 R353 40.2_1%_0402
FBCAL_TERM_GND J26 R354 40.2_1%_0402
G73M_8
+1.8VRUN
R349
1.05K_1%_0402
R352
2.49K_1%_0402
C569
0.22UF_0402
+1.8VRUN
C573 0.22UF_0402
C574 470PF_0402
C575 1UF
L62
1 2
FB_180_1.5A
+1_2VRUN_G73M
FBC_RST 10K_0402 R345
FBC_CKE 10K_0402 R347

MSI CORPORATION

Title
G73M MEM INTERFACE

Size C | Document Number **MS-16322** | Rev 0A

Date: Monday, April 10, 2006 | Sheet 12 of 40

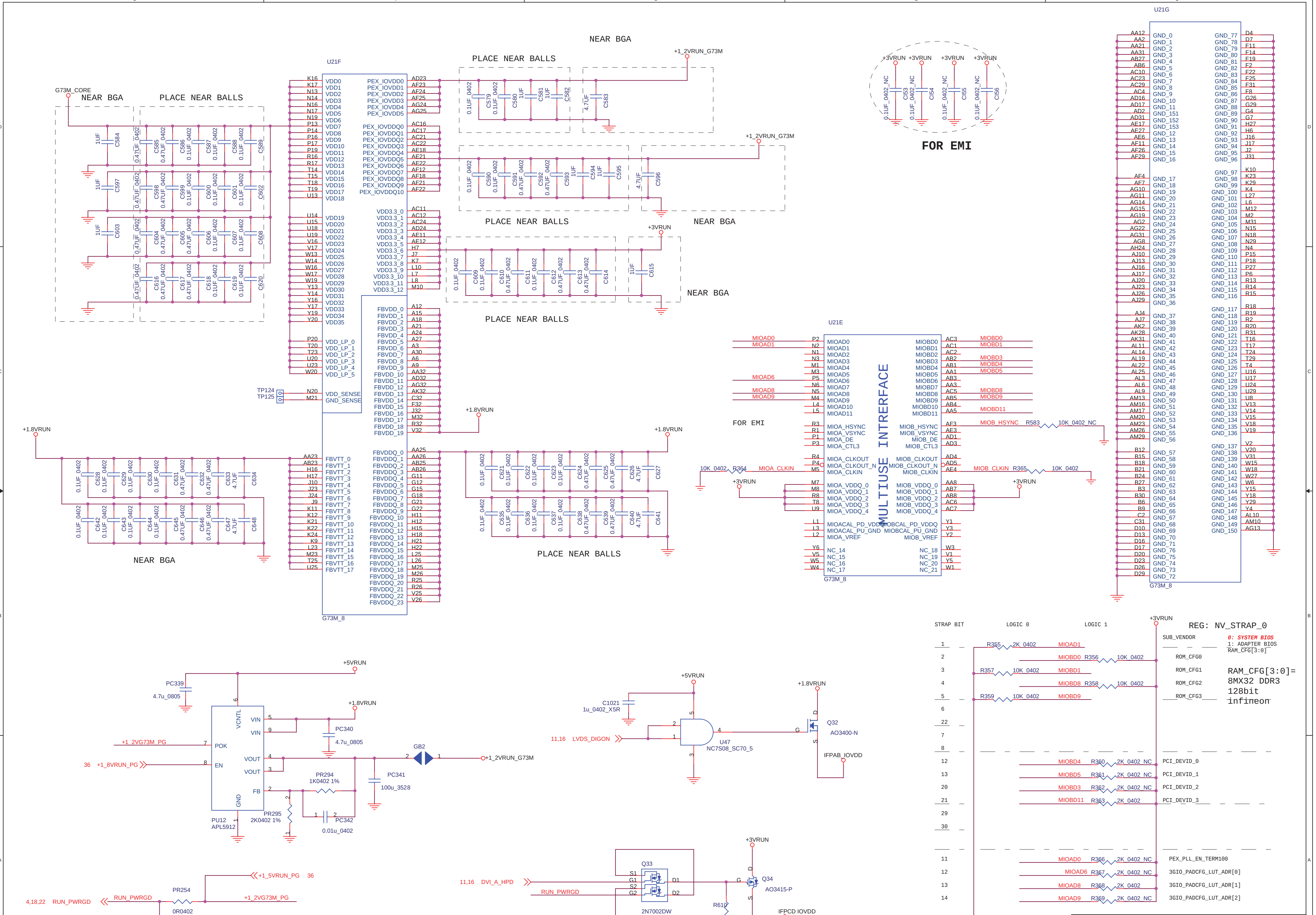
U21F
U21G
U21E
G73M_CORE
NEAR BGA
PLACE NEAR BALLS
+1_2VRUN_G73M
+3VRUN
+1.8VRUN
+5VRUN
FOR EMI
MULTIUSE INTERFACE
VDD_SENSE
GND_SENSE
TP124
TP125
G73M_8
STRAP BIT
LOGIC 0
LOGIC 1
REG: NV_STRAP_0
SUB_VENDOR
0: SYSTEM BIOS
1: ADAPTER BIOS
RAM_CFG[3:0]
ROM_CFG0
ROM_CFG1
ROM_CFG2
ROM_CFG3
RAM_CFG[3:0]=
8MX32 DDR3
128bit
infineon
PCI_DEVID_0
PCI_DEVID_1
PCI_DEVID_2
PCI_DEVID_3
PEX_PLL_EN_TERM100
3GIO_PADCFG_LUT_ADR[0]
3GIO_PADCFG_LUT_ADR[1]
3GIO_PADCFG_LUT_ADR[2]
PC339
4.7u_0805
PC340
4.7u_0805
PC341
100u_3528
PC342
0.01u_0402
PR294
1K0402 1%
PR295
2K0402 1%
PU12
APL5912
VCNTL
VIN
POK
EN
VOUT
FB
GND
GB2
+1_2VG73M_PG
+1_8VRUN_PG
C1021
1u_0402_X5R
U47
NC7S08_SC70_5
LVDS_DIGON
Q32
AO3400-N
IFPAB_IOVDD
Q33
2N7002DW
DVI_A_HPD
RUN_PWRGD
Q34
AO3415-P
R610
10K_0402
IFPCD IOVDD
PR254
0R0402
D25
S-BAS40WS
+1_5VRUN_PG
RUN_ON
4,18,22
21,34,35
11,16
36

MSI CORPORATION

Title
G73M POWER

Size	Document Number	Rev
C	MS-16332	0A

Date: Monday, April 10, 2006 Sheet 13 of 40

256 Mbit GDDRIII Channels A and B Rank 1

Channel A

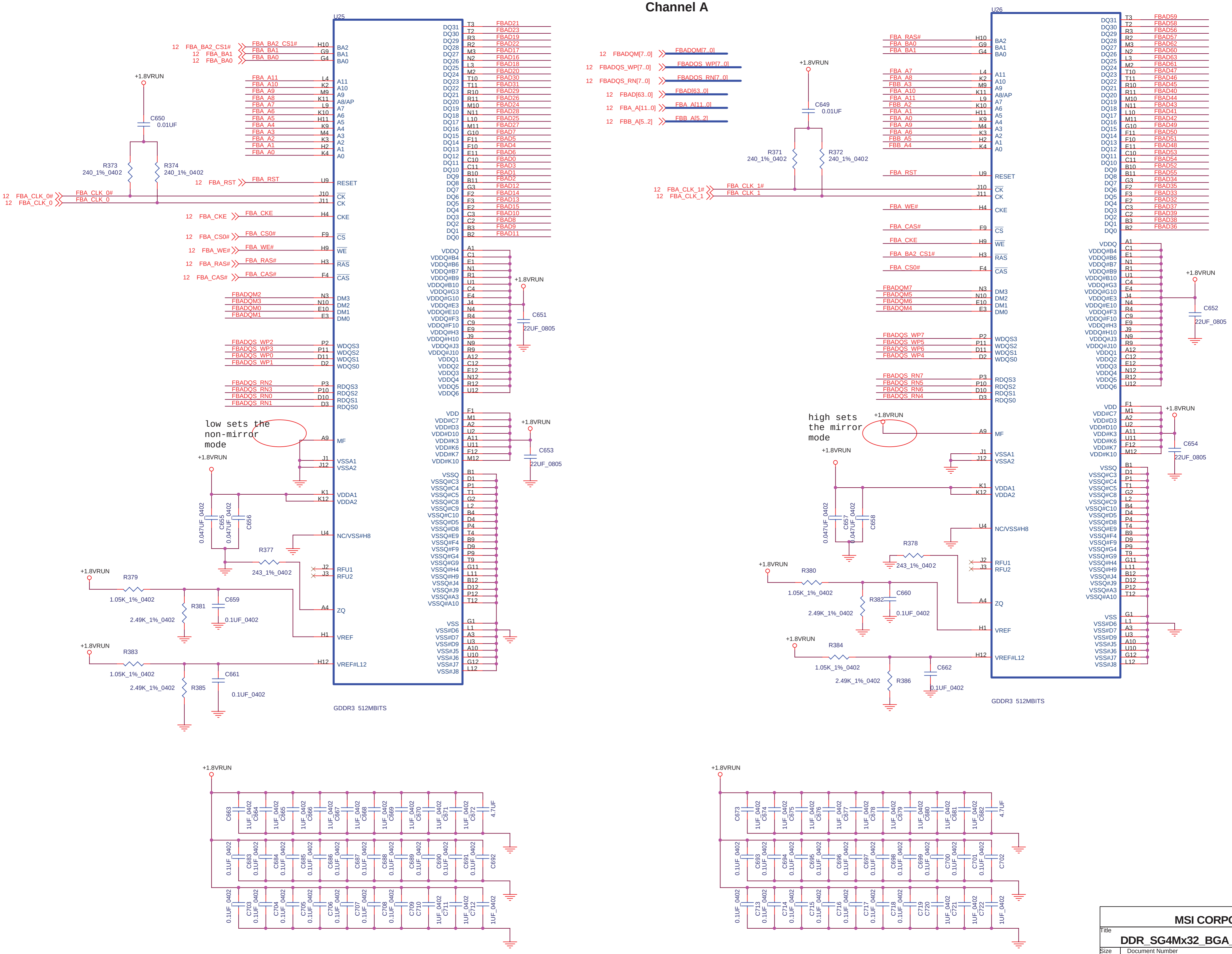
U25
12 FBA_BA2_CS1# FBA_BA2_CS1# H10 BA2
12 FBA_BA1 FBA_BA1 G9 BA1
12 FBA_BA0 FBA_BA0 G4 BA0
+1.8VRUN
C650 0.01UF
FBA_A11 L4 A11
FBA_A10 K2 A10
FBA_A9 M9 A9
FBA_A8 K11 A8/AP
FBA_A7 L9 A7
FBA_A6 K10 A6
FBA_A5 H11 A5
FBA_A4 K9 A4
FBA_A3 M4 A3
FBA_A2 K3 A2
FBA_A1 H2 A1
FBA_A0 K4 A0
R373 240_1%_0402
R374 240_1%_0402
12 FBA_RST FBA_RST U9 RESET
12 FBA_CLK_0# FBA_CLK_0# J10 CK
12 FBA_CLK_0 FBA_CLK_0 J11 CK
12 FBA_CKE FBA_CKE H4 CKE
12 FBA_CS0# FBA_CS0# F9 CS
12 FBA_WE# FBA_WE# H9 WE
12 FBA_RAS# FBA_RAS# H3 RAS
12 FBA_CAS# FBA_CAS# F4 CAS
FBADQM2 N3 DM3
FBADQM3 N10 DM2
FBADQM0 E10 DM1
FBADQM1 E3 DM0
FBADQS_WP2 P2 WDQS3
FBADQS_WP3 P11 WDQS2
FBADQS_WP0 D11 WDQS1
FBADQS_WP1 D2 WDQS0
FBADQS_RN2 P3 RDQS3
FBADQS_RN3 P10 RDQS2
FBADQS_RN0 D10 RDQS1
FBADQS_RN1 D3 RDQS0
low sets the non-mirror mode
A9 MF
+1.8VRUN
J1 VSSA1
J12 VSSA2
K1 VDDA1
K12 VDDA2
0.047UF_0402 C655 0.047UF_0402 C656
U4 NC/VSS#H8
R377 243_1%_0402
J2 RFU1
J3 RFU2
+1.8VRUN
R379 1.05K_1%_0402
R381 2.49K_1%_0402
C659 0.1UF_0402
A4 ZQ
H1 VREF
+1.8VRUN
R383 1.05K_1%_0402
R385 2.49K_1%_0402
C661 0.1UF_0402
H12 VREF#L12
GDDR3 512MBITS
DQ31 T3 FBAD21
DQ30 T2 FBAD23
DQ29 R3 FBAD19
DQ28 R2 FBAD22
DQ27 M3 FBAD17
DQ26 N2 FBAD16
DQ25 L3 FBAD18
DQ24 M2 FBAD20
DQ23 T10 FBAD30
DQ22 T11 FBAD31
DQ21 R10 FBAD29
DQ20 R11 FBAD26
DQ19 M10 FBAD24
DQ18 N11 FBAD28
DQ17 L10 FBAD25
DQ16 M11 FBAD27
DQ15 G10 FBAD7
DQ14 F11 FBAD5
DQ13 F10 FBAD4
DQ12 E11 FBAD6
DQ11 C10 FBAD0
DQ10 C11 FBAD3
DQ9 B10 FBAD1
DQ8 B11 FBAD2
DQ7 G3 FBAD12
DQ6 F2 FBAD14
DQ5 F3 FBAD13
DQ4 E2 FBAD15
DQ3 C3 FBAD10
DQ2 C2 FBAD8
DQ1 B3 FBAD9
DQ0 B2 FBAD11
VDDQ A1
VDDQ#B4 C1
VDDQ#B6 E1
VDDQ#B7 N1
VDDQ#B9 R1
VDDQ#B10 U1
VDDQ#G3 C4
VDDQ#G10 E4
VDDQ#E3 J4
VDDQ#E10 N4
VDDQ#F3 R4
VDDQ#F10 C9
VDDQ#H3 E9
VDDQ#H10 J9
VDDQ#J3 N9
VDDQ#J10 R9
VDDQ1 A12
VDDQ2 C12
VDDQ3 E12
VDDQ4 N12
VDDQ5 R12
VDDQ6 U12
+1.8VRUN
C651 22UF_0805
VDD F1
VDD#C7 M1
VDD#D3 A2
VDD#D10 U2
VDD#K3 A11
VDD#K6 U11
VDD#K7 F12
VDD#K10 M12
+1.8VRUN
C653 22UF_0805
VSSQ B1
VSSQ#C3 D1
VSSQ#C4 P1
VSSQ#C5 T1
VSSQ#C8 G2
VSSQ#C9 L2
VSSQ#C10 B4
VSSQ#D5 D4
VSSQ#D8 P4
VSSQ#E9 T4
VSSQ#F4 B9
VSSQ#F9 D9
VSSQ#G4 P9
VSSQ#G9 T9
VSSQ#H4 G11
VSSQ#H9 L11
VSSQ#J4 B12
VSSQ#J9 D12
VSSQ#A3 P12
VSSQ#A10 T12
VSS G1
VSS#D6 L1
VSS#D7 A3
VSS#D9 U3
VSS#J5 A10
VSS#J6 U10
VSS#J7 G12
VSS#J8 L12
12 FBADQM[7..0] FBADQM[7..0]
12 FBADQS_WP[7..0] FBADQS_WP[7..0]
12 FBADQS_RN[7..0] FBADQS_RN[7..0]
12 FBAD[63..0] FBAD[63..0]
12 FBA_A[11..0] FBA_A[11..0]
12 FBB_A[5..2] FBB_A[5..2]
+1.8VRUN
C649 0.01UF
R371 240_1%_0402
R372 240_1%_0402
12 FBA_CLK_1# FBA_CLK_1#
12 FBA_CLK_1 FBA_CLK_1
U26
FBA_RAS# H10 BA2
FBA_BA0 G9 BA1
FBA_BA1 G4 BA0
FBA_A7 L4 A11
FBA_A8 K2 A10
FBB_A3 M9 A9
FBA_A10 K11 A8/AP
FBA_A11 L9 A7
FBB_A2 K10 A6
FBA_A1 H11 A5
FBA_A0 K9 A4
FBA_A9 M4 A3
FBA_A6 K3 A2
FBB_A5 H2 A1
FBB_A4 K4 A0
FBA_RST U9 RESET
J10 CK
J11 CK
FBA_WE# H4 CKE
FBA_CAS# F9 CS
FBA_CKE H9 WE
FBA_BA2_CS1# H3 RAS
FBA_CS0# F4 CAS
FBADQM7 N3 DM3
FBADQM5 N10 DM2
FBADQM6 E10 DM1
FBADQM4 E3 DM0
FBADQS_WP7 P2 WDQS3
FBADQS_WP5 P11 WDQS2
FBADQS_WP6 D11 WDQS1
FBADQS_WP4 D2 WDQS0
FBADQS_RN7 P3 RDQS3
FBADQS_RN5 P10 RDQS2
FBADQS_RN6 D10 RDQS1
FBADQS_RN4 D3 RDQS0
high sets the mirror mode
+1.8VRUN
A9 MF
J1 VSSA1
J12 VSSA2
+1.8VRUN
K1 VDDA1
K12 VDDA2
0.047UF_0402 C657 0.047UF_0402 C658
U4 NC/VSS#H8
R378 243_1%_0402
J2 RFU1
J3 RFU2
+1.8VRUN
R380 1.05K_1%_0402
R382 2.49K_1%_0402
C660 0.1UF_0402
A4 ZQ
H1 VREF
+1.8VRUN
R384 1.05K_1%_0402
R386 2.49K_1%_0402
C662 0.1UF_0402
H12 VREF#L12
GDDR3 512MBITS
DQ31 T3 FBAD59
DQ30 T2 FBAD58
DQ29 R3 FBAD56
DQ28 R2 FBAD57
DQ27 M3 FBAD62
DQ26 N2 FBAD60
DQ25 L3 FBAD63
DQ24 M2 FBAD61
DQ23 T10 FBAD47
DQ22 T11 FBAD46
DQ21 R10 FBAD45
DQ20 R11 FBAD40
DQ19 M10 FBAD44
DQ18 N11 FBAD43
DQ17 L10 FBAD41
DQ16 M11 FBAD42
DQ15 G10 FBAD49
DQ14 F11 FBAD50
DQ13 F10 FBAD51
DQ12 E11 FBAD48
DQ11 C10 FBAD53
DQ10 C11 FBAD54
DQ9 B10 FBAD52
DQ8 B11 FBAD55
DQ7 G3 FBAD34
DQ6 F2 FBAD35
DQ5 F3 FBAD33
DQ4 E2 FBAD32
DQ3 C3 FBAD37
DQ2 C2 FBAD39
DQ1 B3 FBAD38
DQ0 B2 FBAD36
VDDQ A1
VDDQ#B4 C1
VDDQ#B6 E1
VDDQ#B7 N1
VDDQ#B9 R1
VDDQ#B10 U1
VDDQ#G3 C4
VDDQ#G10 E4
VDDQ#E3 J4
VDDQ#E10 N4
VDDQ#F3 R4
VDDQ#F10 C9
VDDQ#H3 E9
VDDQ#H10 J9
VDDQ#J3 N9
VDDQ#J10 R9
VDDQ1 A12
VDDQ2 C12
VDDQ3 E12
VDDQ4 N12
VDDQ5 R12
VDDQ6 U12
+1.8VRUN
C652 22UF_0805
VDD F1
VDD#C7 M1
VDD#D3 A2
VDD#D10 U2
VDD#K3 A11
VDD#K6 U11
VDD#K7 F12
VDD#K10 M12
+1.8VRUN
C654 22UF_0805
VSSQ B1
VSSQ#C3 D1
VSSQ#C4 P1
VSSQ#C5 T1
VSSQ#C8 G2
VSSQ#C9 L2
VSSQ#C10 B4
VSSQ#D5 D4
VSSQ#D8 P4
VSSQ#E9 T4
VSSQ#F4 B9
VSSQ#F9 D9
VSSQ#G4 P9
VSSQ#G9 T9
VSSQ#H4 G11
VSSQ#H9 L11
VSSQ#J4 B12
VSSQ#J9 D12
VSSQ#A3 P12
VSSQ#A10 T12
VSS G1
VSS#D6 L1
VSS#D7 A3
VSS#D9 U3
VSS#J5 A10
VSS#J6 U10
VSS#J7 G12
VSS#J8 L12
+1.8VRUN
C663 1UF_0402 C664 1UF_0402 C665 1UF_0402 C666 1UF_0402 C667 1UF_0402 C668 1UF_0402 C669 1UF_0402 C670 1UF_0402 C671 1UF_0402 C672 4.7UF
0.1UF_0402 C683 0.1UF_0402 C684 0.1UF_0402 C685 0.1UF_0402 C686 0.1UF_0402 C687 0.1UF_0402 C688 0.1UF_0402 C689 0.1UF_0402 C690 0.1UF_0402 C691 0.1UF_0402 C692
0.1UF_0402 C703 0.1UF_0402 C704 0.1UF_0402 C705 0.1UF_0402 C706 0.1UF_0402 C707 0.1UF_0402 C708 0.1UF_0402 C709 C710 1UF_0402 C711 1UF_0402 C712 1UF_0402
+1.8VRUN
C673 1UF_0402 C674 1UF_0402 C675 1UF_0402 C676 1UF_0402 C677 1UF_0402 C678 1UF_0402 C679 1UF_0402 C680 1UF_0402 C681 1UF_0402 C682 4.7UF
0.1UF_0402 C693 0.1UF_0402 C694 0.1UF_0402 C695 0.1UF_0402 C696 0.1UF_0402 C697 0.1UF_0402 C698 0.1UF_0402 C699 0.1UF_0402 C700 0.1UF_0402 C701 0.1UF_0402 C702
0.1UF_0402 C713 0.1UF_0402 C714 0.1UF_0402 C715 0.1UF_0402 C716 0.1UF_0402 C717 0.1UF_0402 C718 0.1UF_0402 C719 C720 1UF_0402 C721 1UF_0402 C722 1UF_0402

MSI CORPORATION

Title
DDR_SG4Mx32_BGA_A

Size C | Document Number **MS-16332** | Rev 0.A

Date: Tuesday, April 11, 2006 | Sheet 14 of 40

Channel B

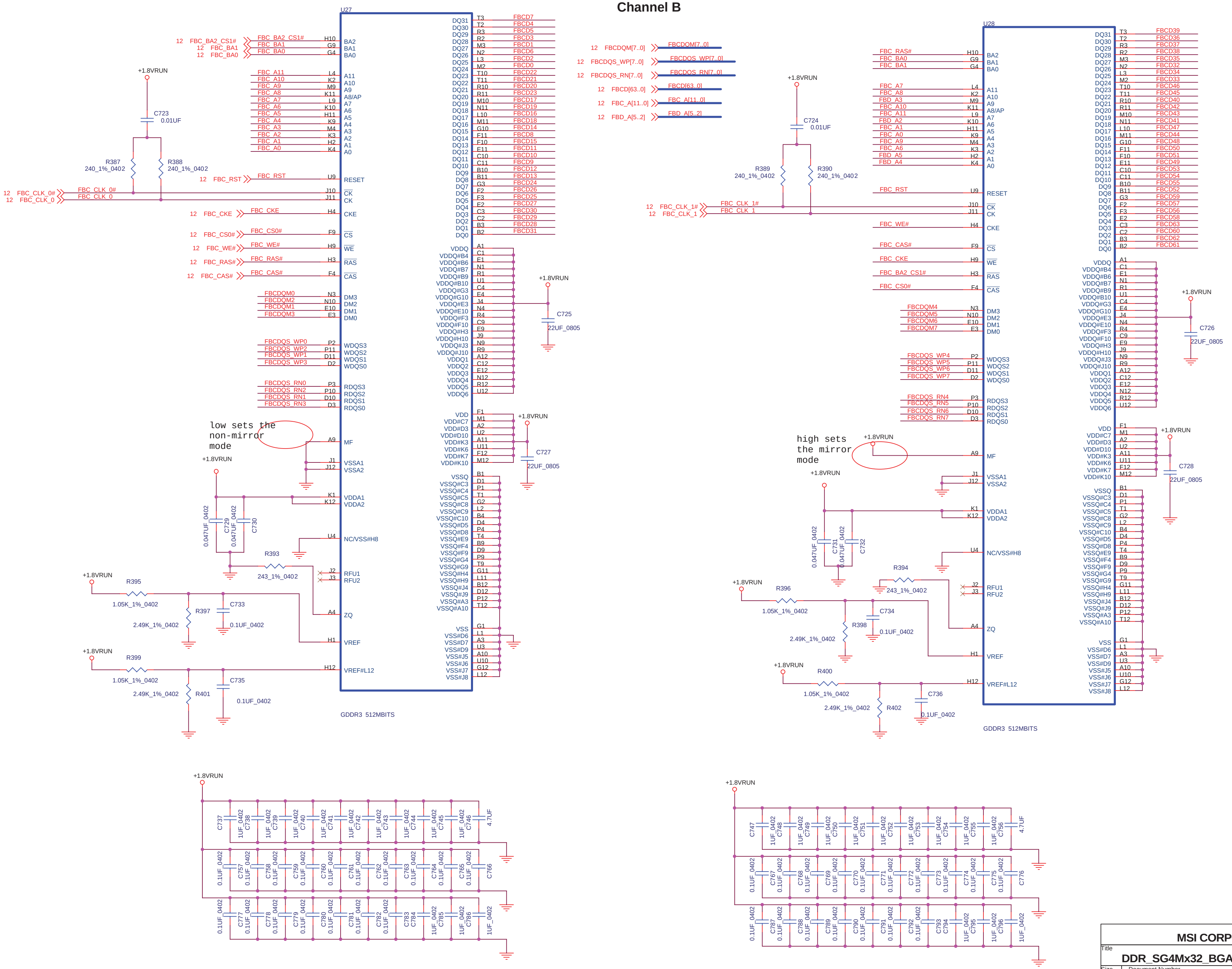
U27
12 FBC_BA2_CS1#
12 FBC_BA1
12 FBC_BA0
FBC_BA2_CS1# H10 BA2
FBC_BA1 G9 BA1
FBC_BA0 G4 BA0
FBC_A11 L4 A11
FBC_A10 K2 A10
FBC_A9 M9 A9
FBC_A8 K11 A8/AP
FBC_A7 L9 A7
FBC_A6 K10 A6
FBC_A5 H11 A5
FBC_A4 K9 A4
FBC_A3 M4 A3
FBC_A2 K3 A2
FBC_A1 H2 A1
FBC_A0 K4 A0
+1.8VRUN
C723
0.01UF
R387
240_1%_0402
R388
240_1%_0402
12 FBC_RST
FBC_RST U9 RESET
12 FBC_CLK_0#
12 FBC_CLK_0
FBC_CLK_0# J10 CK
FBC_CLK_0 J11 CK
12 FBC_CKE
FBC_CKE H4 CKE
12 FBC_CS0#
FBC_CS0# F9 CS
12 FBC_WE#
FBC_WE# H9 WE
12 FBC_RAS#
FBC_RAS# H3 RAS
12 FBC_CAS#
FBC_CAS# F4 CAS
FBCDQM0 N3 DM3
FBCDQM2 N10 DM2
FBCDQM1 E10 DM1
FBCDQM3 E3 DM0
FBCDQS_WP0 P2 WDQS3
FBCDQS_WP2 P11 WDQS2
FBCDQS_WP1 D11 WDQS1
FBCDQS_WP3 D2 WDQS0
FBCDQS_RN0 P3 RDQS3
FBCDQS_RN2 P10 RDQS2
FBCDQS_RN1 D10 RDQS1
FBCDQS_RN3 D3 RDQS0
low sets the non-mirror mode
A9 MF
J1 VSSA1
J12 VSSA2
+1.8VRUN
K1 VDDA1
K12 VDDA2
0.047UF_0402
C729
0.047UF_0402
C730
U4 NC/VSS#H8
R393
243_1%_0402
J2 RFU1
J3 RFU2
+1.8VRUN
R395
1.05K_1%_0402
R397
2.49K_1%_0402
C733
0.1UF_0402
A4 ZQ
H1 VREF
+1.8VRUN
R399
1.05K_1%_0402
R401
2.49K_1%_0402
C735
0.1UF_0402
H12 VREF#L12
GDDR3 512MBITS
DQ31 T3 FBCD7
DQ30 T2 FBCD4
DQ29 R3 FBCD5
DQ28 R2 FBCD3
DQ27 M3 FBCD1
DQ26 N2 FBCD6
DQ25 L3 FBCD2
DQ24 M2 FBCD0
DQ23 T10 FBCD22
DQ22 T11 FBCD21
DQ21 R10 FBCD20
DQ20 R11 FBCD23
DQ19 M10 FBCD17
DQ18 N11 FBCD19
DQ17 L10 FBCD16
DQ16 M11 FBCD18
DQ15 G10 FBCD14
DQ14 F11 FBCD8
DQ13 F10 FBCD15
DQ12 E11 FBCD11
DQ11 C10 FBCD10
DQ10 C11 FBCD9
DQ9 B10 FBCD12
DQ8 B11 FBCD13
DQ7 G3 FBCD24
DQ6 F2 FBCD26
DQ5 F3 FBCD25
DQ4 E2 FBCD27
DQ3 C3 FBCD30
DQ2 C2 FBCD29
DQ1 B3 FBCD28
DQ0 B2 FBCD31
VDDQ A1
VDDQ#B4 C1
VDDQ#B6 E1
VDDQ#B7 N1
VDDQ#B9 R1
VDDQ#B10 U1
VDDQ#G3 C4
VDDQ#G10 E4
VDDQ#E3 J4
VDDQ#E10 N4
VDDQ#F3 R4
VDDQ#F10 C9
VDDQ#H3 E9
VDDQ#H10 J9
VDDQ#J3 N9
VDDQ#J10 R9
VDDQ1 A12
VDDQ2 C12
VDDQ3 E12
VDDQ4 N12
VDDQ5 R12
VDDQ6 U12
+1.8VRUN
C725
22UF_0805
VDD F1
VDD#C7 M1
VDD#D3 A2
VDD#D10 U2
VDD#K3 A11
VDD#K6 U11
VDD#K7 F12
VDD#K10 M12
+1.8VRUN
C727
22UF_0805
VSSQ B1
VSSQ#C3 D1
VSSQ#C4 P1
VSSQ#C5 T1
VSSQ#C8 G2
VSSQ#C9 L2
VSSQ#C10 B4
VSSQ#D5 D4
VSSQ#D8 P4
VSSQ#E9 T4
VSSQ#F4 B9
VSSQ#F9 D9
VSSQ#G4 P9
VSSQ#G9 T9
VSSQ#H4 G11
VSSQ#H9 L11
VSSQ#J4 B12
VSSQ#J9 D12
VSSQ#A3 P12
VSSQ#A10 T12
VSS G1
VSS#D6 L1
VSS#D7 A3
VSS#D9 U3
VSS#J5 A10
VSS#J6 U10
VSS#J7 G12
VSS#J8 L12
12 FBCDQM[7..0] FBCDQM[7..0]
12 FBCDQS_WP[7..0] FBCDQS_WP[7..0]
12 FBCDQS_RN[7..0] FBCDQS_RN[7..0]
12 FBCD[63..0] FBCD[63..0]
12 FBC_A[11..0] FBC_A[11..0]
12 FBD_A[5..2] FBD_A[5..2]
U28
FBC_RAS# H10 BA2
FBC_BA0 G9 BA1
FBC_BA1 G4 BA0
FBC_A7 L4 A11
FBC_A8 K2 A10
FBD_A3 M9 A9
FBC_A10 K11 A8/AP
FBC_A11 L9 A7
FBD_A2 K10 A6
FBC_A1 H11 A5
FBC_A0 K9 A4
FBC_A9 M4 A3
FBC_A6 K3 A2
FBD_A5 H2 A1
FBD_A4 K4 A0
+1.8VRUN
C724
0.01UF
R389
240_1%_0402
R390
240_1%_0402
FBC_RST U9 RESET
12 FBC_CLK_1#
12 FBC_CLK_1
FBC_CLK_1# J10 CK
FBC_CLK_1 J11 CK
FBC_WE# H4 CKE
FBC_CAS# F9 CS
FBC_CKE H9 WE
FBC_BA2_CS1# H3 RAS
FBC_CS0# F4 CAS
FBCDQM4 N3 DM3
FBCDQM5 N10 DM2
FBCDQM6 E10 DM1
FBCDQM7 E3 DM0
FBCDQS_WP4 P2 WDQS3
FBCDQS_WP5 P11 WDQS2
FBCDQS_WP6 D11 WDQS1
FBCDQS_WP7 D2 WDQS0
FBCDQS_RN4 P3 RDQS3
FBCDQS_RN5 P10 RDQS2
FBCDQS_RN6 D10 RDQS1
FBCDQS_RN7 D3 RDQS0
high sets the mirror mode
+1.8VRUN
A9 MF
J1 VSSA1
J12 VSSA2
+1.8VRUN
K1 VDDA1
K12 VDDA2
0.047UF_0402
C731
0.047UF_0402
C732
U4 NC/VSS#H8
R394
243_1%_0402
J2 RFU1
J3 RFU2
+1.8VRUN
R396
1.05K_1%_0402
R398
2.49K_1%_0402
C734
0.1UF_0402
A4 ZQ
H1 VREF
+1.8VRUN
R400
1.05K_1%_0402
R402
2.49K_1%_0402
C736
0.1UF_0402
H12 VREF#L12
GDDR3 512MBITS
DQ31 T3 FBCD39
DQ30 T2 FBCD36
DQ29 R3 FBCD37
DQ28 R2 FBCD38
DQ27 M3 FBCD35
DQ26 N2 FBCD32
DQ25 L3 FBCD34
DQ24 M2 FBCD33
DQ23 T10 FBCD46
DQ22 T11 FBCD45
DQ21 R10 FBCD40
DQ20 R11 FBCD42
DQ19 M10 FBCD43
DQ18 N11 FBCD41
DQ17 L10 FBCD47
DQ16 M11 FBCD44
DQ15 G10 FBCD48
DQ14 F11 FBCD50
DQ13 F10 FBCD51
DQ12 E11 FBCD49
DQ11 C10 FBCD53
DQ10 C11 FBCD54
DQ9 B10 FBCD55
DQ8 B11 FBCD52
DQ7 G3 FBCD59
DQ6 F2 FBCD57
DQ5 F3 FBCD56
DQ4 E2 FBCD58
DQ3 C3 FBCD63
DQ2 C2 FBCD60
DQ1 B3 FBCD62
DQ0 B2 FBCD61
+1.8VRUN
C726
22UF_0805
+1.8VRUN
C728
22UF_0805
+1.8VRUN
C737 C738 C739 C740 C741 C742 C743 C744 C745 C746
1UF_0402
4.7UF
C757 C758 C759 C760 C761 C762 C763 C764 C765 C766
0.1UF_0402
C777 C778 C779 C780 C781 C782 C783 C784 C785 C786
0.1UF_0402
1UF_0402
+1.8VRUN
C747 C748 C749 C750 C751 C752 C753 C754 C755 C756
1UF_0402
4.7UF
C767 C768 C769 C770 C771 C772 C773 C774 C775 C776
0.1UF_0402
C787 C788 C789 C790 C791 C792 C793 C794 C795 C796
0.1UF_0402
1UF_0402
A B C D E
4 3 2 1

MSI CORPORATION

Title
DDR_SG4Mx32_BGA_B

Size C
Document Number **MS-16322**
Rev 0.A
Date: Monday, April 10, 2006
Sheet 15 of 40

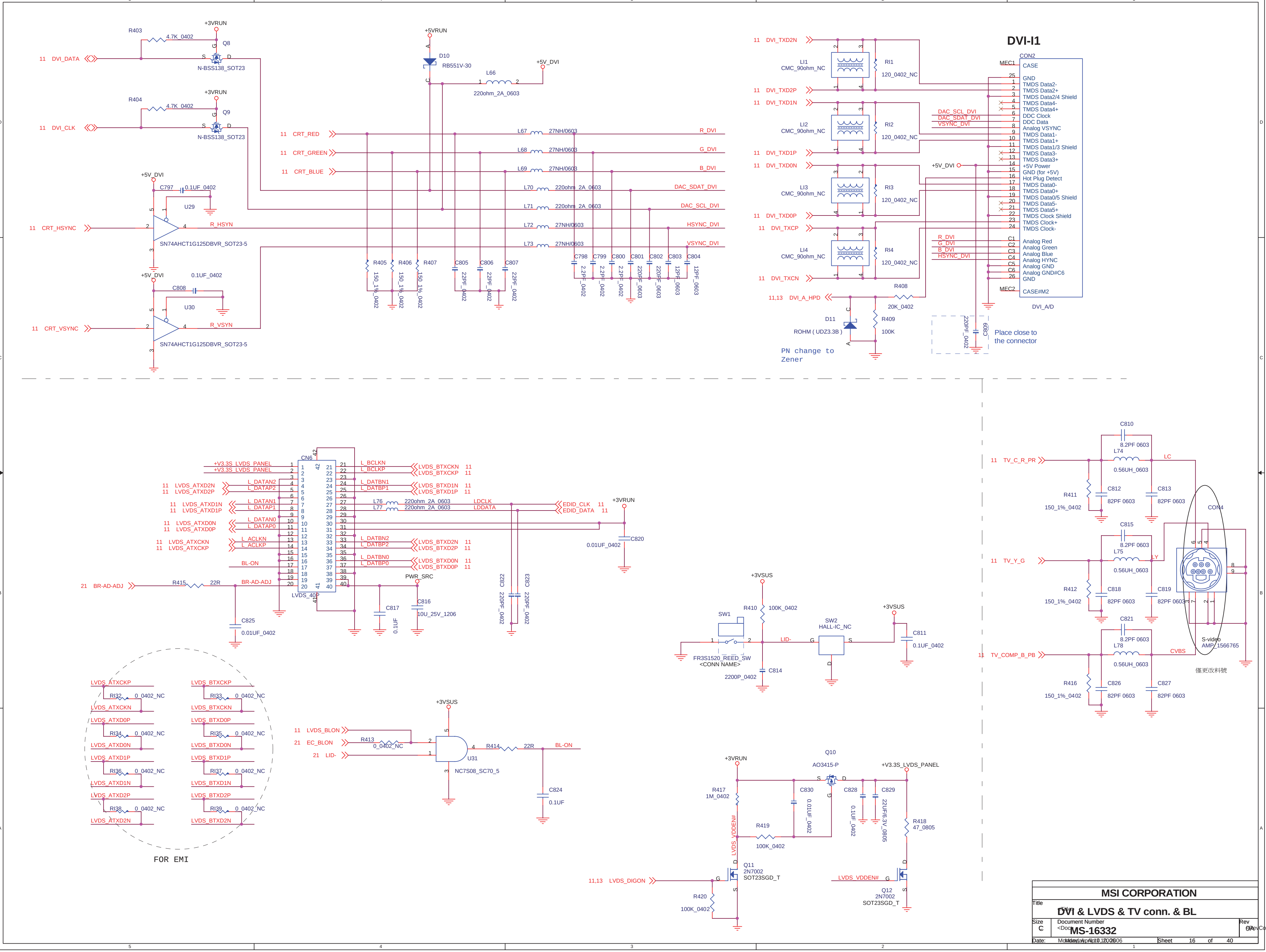

DVI-I1
R403 4.7K_0402
+3VRUN
Q8 N-BSS138_SOT23
11 DVI_DATA
R404 4.7K_0402
Q9 N-BSS138_SOT23
11 DVI_CLK
+5VRUN
D10 RB551V-30
L66 220ohm_2A_0603
+5V_DVI
11 CRT_RED
11 CRT_GREEN
11 CRT_BLUE
L67 27NH/0603 R_DVI
L68 27NH/0603 G_DVI
L69 27NH/0603 B_DVI
L70 220ohm_2A_0603 DAC_SDAT_DVI
L71 220ohm_2A_0603 DAC_SCL_DVI
L72 27NH/0603 HSYNC_DVI
L73 27NH/0603 VSYNC_DVI
C797 0.1UF_0402
U29 SN74AHCT1G125DBVR_SOT23-5
11 CRT_HSYNC R_HSYN
C808 0.1UF_0402
U30 SN74AHCT1G125DBVR_SOT23-5
11 CRT_VSYNC R_VSYN
R405 150_1%_0402
R406 150_1%_0402
R407 150_1%_0402
C805 22PF_0402
C806 22PF_0402
C807 22PF_0402
C798 2.2PF_0402
C799 2.2PF_0402
C800 2.2PF_0402
C801 220PF_0603
C802 220PF_0603
C803 12PF_0603
C804 12PF_0603
11 DVI_TXD2N
11 DVI_TXD2P
11 DVI_TXD1N
11 DVI_TXD1P
11 DVI_TXD0N
11 DVI_TXD0P
11 DVI_TXCP
11 DVI_TXCN
LI1 CMC_90ohm_NC
LI2 CMC_90ohm_NC
LI3 CMC_90ohm_NC
LI4 CMC_90ohm_NC
RI1 120_0402_NC
RI2 120_0402_NC
RI3 120_0402_NC
RI4 120_0402_NC
CON2
MEC1 CASE
25 GND
1 TMDS Data2-
2 TMDS Data2+
3 TMDS Data2/4 Shield
4 TMDS Data4-
5 TMDS Data4+
6 DDC Clock
7 DDC Data
8 Analog VSYNC
9 TMDS Data1-
10 TMDS Data1+
11 TMDS Data1/3 Shield
12 TMDS Data3-
13 TMDS Data3+
14 +5V Power
15 GND (for +5V)
16 Hot Plug Detect
17 TMDS Data0-
18 TMDS Data0+
19 TMDS Data0/5 Shield
20 TMDS Data5-
21 TMDS Data5+
22 TMDS Clock Shield
23 TMDS Clock+
24 TMDS Clock-
C1 Analog Red
C2 Analog Green
C3 Analog Blue
C4 Analog HYNC
C5 Analog GND
C6 Analog GND#C6
26 GND
MEC2 CASE#M2
DVI_A/D
DAC_SCL_DVI
DAC_SDAT_DVI
VSYNC_DVI
+5V_DVI
R_DVI
G_DVI
B_DVI
HSYNC_DVI
R408 20K_0402
11,13 DVI_A_HPD
D11 ROHM (UDZ3.3B)
R409 100K
PN change to Zener
C809 220PF_0402
Place close to the connector
CN6
+V3.3S_LVDS_PANEL
11 LVDS_ATXD2N L_DATAN2
11 LVDS_ATXD2P L_DATAP2
11 LVDS_ATXD1N L_DATAN1
11 LVDS_ATXD1P L_DATAP1
11 LVDS_ATXD0N L_DATAN0
11 LVDS_ATXD0P L_DATAP0
11 LVDS_ATXCKN L_ACLKN
11 LVDS_ATXCKP L_ACLKP
BL-ON
21 BR-AD-ADJ R415 22R BR-AD-ADJ
C825 0.01UF_0402
LVDS_40P
L_BCLKN LVDS_BTXCKN 11
L_BCLKP LVDS_BTXCKP 11
L_DATBN1 LVDS_BTXD1N 11
L_DATBP1 LVDS_BTXD1P 11
L76 220ohm_2A_0603 LDCLK EDID_CLK 11
L77 220ohm_2A_0603 LDDATA EDID_DATA 11
+3VRUN
C820 0.01UF_0402
L_DATBN2 LVDS_BTXD2N 11
L_DATBP2 LVDS_BTXD2P 11
L_DATBN0 LVDS_BTXD0N 11
L_DATBP0 LVDS_BTXD0P 11
PWR_SRC
C817 0.1UF
C816 10U_25V_1206
C822 220PF_0402
C823 220PF_0402
LVDS_ATXCKP LVDS_ATXCKN RI32 0_0402_NC
LVDS_ATXD0P LVDS_ATXD0N RI34 0_0402_NC
LVDS_ATXD1P LVDS_ATXD1N RI36 0_0402_NC
LVDS_ATXD2P LVDS_ATXD2N RI38 0_0402_NC
LVDS_BTXCKP LVDS_BTXCKN RI33 0_0402_NC
LVDS_BTXD0P LVDS_BTXD0N RI35 0_0402_NC
LVDS_BTXD1P LVDS_BTXD1N RI37 0_0402_NC
LVDS_BTXD2P LVDS_BTXD2N RI39 0_0402_NC
FOR EMI
+3VSUS
11 LVDS_BLON R413 0_0402_NC
21 EC_BLON
21 LID-
U31 NC7S08_SC70_5
R414 22R BL-ON
C824 0.1UF
+3VSUS
SW1 FR3S1520_REED_SW <CONN NAME>
R410 100K_0402
LID-
C814 2200P_0402
SW2 HALL-IC_NC
C811 0.1UF_0402
Q10 AO3415-P
+3VRUN
+V3.3S_LVDS_PANEL
R417 1M_0402
C830 0.01UF_0402
C828 0.1UF_0402
C829 22UF/6.3V_0805
R419 100K_0402
R418 47_0805
LVDS_VDDEN#
Q11 2N7002 SOT23SGD_T
11,13 LVDS_DIGON
R420 100K_0402
Q12 2N7002 SOT23SGD_T
11 TV_C_R_PR
C810 8.2PF 0603
L74 0.56UH_0603 LC
R411 150_1%_0402
C812 82PF 0603
C813 82PF 0603
11 TV_Y_G
C815 8.2PF 0603
L75 0.56UH_0603 LY
R412 150_1%_0402
C818 82PF 0603
C819 82PF 0603
CON4
11 TV_COMP_B_PB
C821 8.2PF 0603
L78 0.56UH_0603 CVBS
R416 150_1%_0402
C826 82PF 0603
C827 82PF 0603
S-video AMP_1566765
僅更改料號

MSI CORPORATION

Title
DVI & LVDS & TV conn. & BL

Size C
Document Number <Doc
MS-16332
Rev 0A <RevCode>

Date: Monday, April 10, 2006 Sheet 16 of 40

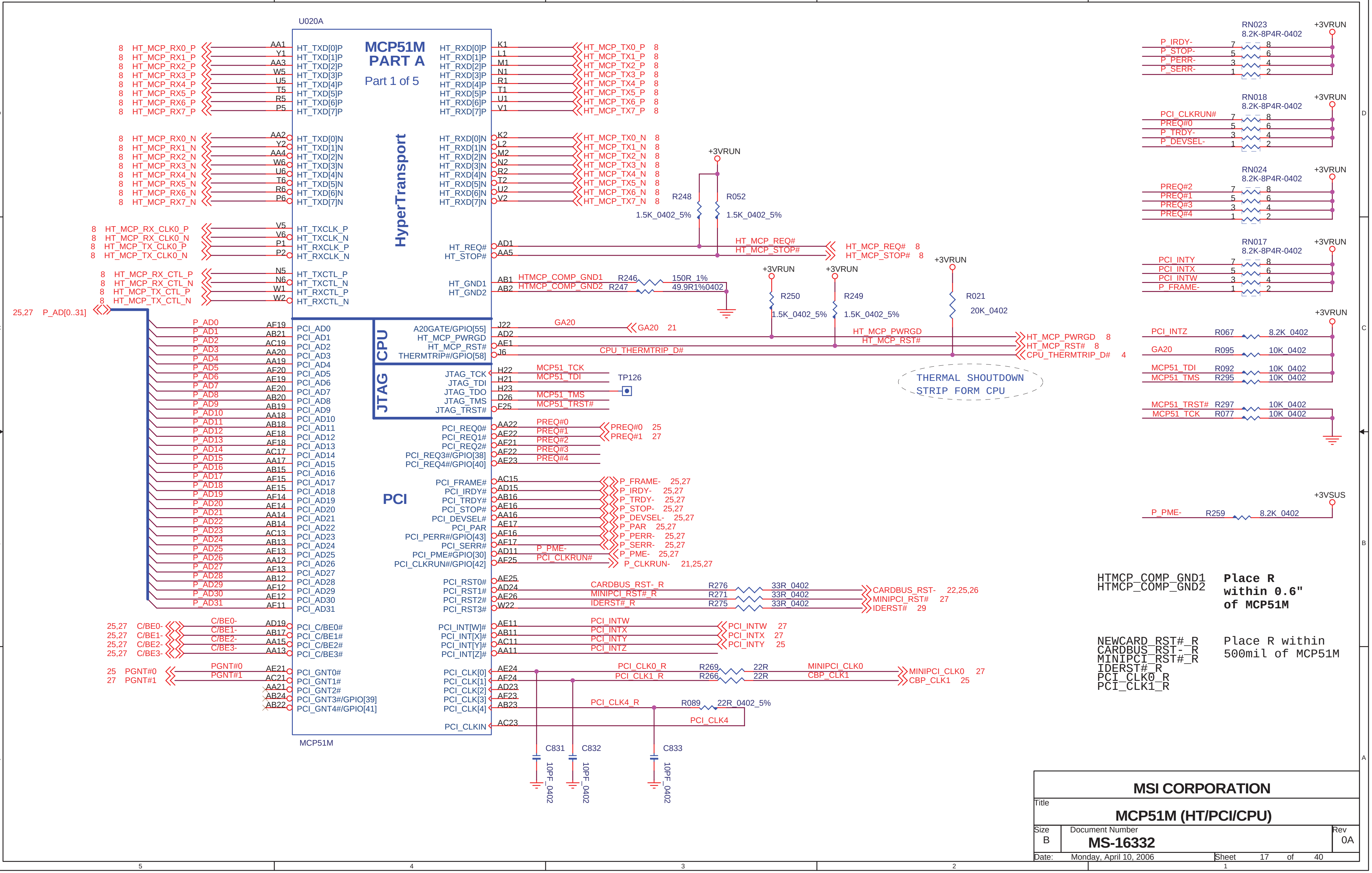
U020A
MCP51M
PART A
Part 1 of 5
HyperTransport
CPU
JTAG
PCI
MCP51M
8 HT_MCP_RX0_P AA1 HT_TXD[0]P
8 HT_MCP_RX1_P Y1 HT_TXD[1]P
8 HT_MCP_RX2_P AA3 HT_TXD[2]P
8 HT_MCP_RX3_P W5 HT_TXD[3]P
8 HT_MCP_RX4_P U5 HT_TXD[4]P
8 HT_MCP_RX5_P T5 HT_TXD[5]P
8 HT_MCP_RX6_P R5 HT_TXD[6]P
8 HT_MCP_RX7_P P5 HT_TXD[7]P
8 HT_MCP_RX0_N AA2 HT_TXD[0]N
8 HT_MCP_RX1_N Y2 HT_TXD[1]N
8 HT_MCP_RX2_N AA4 HT_TXD[2]N
8 HT_MCP_RX3_N W6 HT_TXD[3]N
8 HT_MCP_RX4_N U6 HT_TXD[4]N
8 HT_MCP_RX5_N T6 HT_TXD[5]N
8 HT_MCP_RX6_N R6 HT_TXD[6]N
8 HT_MCP_RX7_N P6 HT_TXD[7]N
8 HT_MCP_RX_CLK0_P V5 HT_TXCLK_P
8 HT_MCP_RX_CLK0_N V6 HT_TXCLK_N
8 HT_MCP_TX_CLK0_P P1 HT_RXCLK_P
8 HT_MCP_TX_CLK0_N P2 HT_RXCLK_N
8 HT_MCP_RX_CTL_P N5 HT_TXCTL_P
8 HT_MCP_RX_CTL_N N6 HT_TXCTL_N
8 HT_MCP_TX_CTL_P W1 HT_RXCTL_P
8 HT_MCP_TX_CTL_N W2 HT_RXCTL_N
HT_RXD[0]P K1 HT_MCP_TX0_P 8
HT_RXD[1]P L1 HT_MCP_TX1_P 8
HT_RXD[2]P M1 HT_MCP_TX2_P 8
HT_RXD[3]P N1 HT_MCP_TX3_P 8
HT_RXD[4]P R1 HT_MCP_TX4_P 8
HT_RXD[5]P T1 HT_MCP_TX5_P 8
HT_RXD[6]P U1 HT_MCP_TX6_P 8
HT_RXD[7]P V1 HT_MCP_TX7_P 8
HT_RXD[0]N K2 HT_MCP_TX0_N 8
HT_RXD[1]N L2 HT_MCP_TX1_N 8
HT_RXD[2]N M2 HT_MCP_TX2_N 8
HT_RXD[3]N N2 HT_MCP_TX3_N 8
HT_RXD[4]N P2 HT_MCP_TX4_N 8
HT_RXD[5]N T2 HT_MCP_TX5_N 8
HT_RXD[6]N U2 HT_MCP_TX6_N 8
HT_RXD[7]N V2 HT_MCP_TX7_N 8
+3VRUN
R248 1.5K_0402_5%
R052 1.5K_0402_5%
HT_REQ# AD1 HT_MCP_REQ# HT_MCP_REQ# 8
HT_STOP# AA5 HT_MCP_STOP# HT_MCP_STOP# 8
HT_GND1 AB1 HTMCP_COMP_GND1 R246 150R_1%
HT_GND2 AB2 HTMCP_COMP_GND2 R247 49.9R1%0402
+3VRUN R250 1.5K_0402_5%
+3VRUN R249 1.5K_0402_5%
+3VRUN R021 20K_0402
25,27 P_AD[0..31]
A20GATE/GPIO[55] J22 GA20 GA20 21
HT_MCP_PWRGD AD2 HT_MCP_PWRGD HT_MCP_PWRGD 8
HT_MCP_RST# AE1 HT_MCP_RST# HT_MCP_RST# 8
THERMTRIP#/GPIO[58] J6 CPU_THERMTRIP_D# CPU_THERMTRIP_D# 4
JTAG_TCK H22 MCP51_TCK
JTAG_TDI H21 MCP51_TDI
JTAG_TDO H23 TP126
JTAG_TMS D26 MCP51_TMS
JTAG_TRST# F25 MCP51_TRST#
THERMAL SHOUTDOWN STRIP FORM CPU
P_AD0 AF19 PCI_AD0
P_AD1 AB21 PCI_AD1
P_AD2 AC19 PCI_AD2
P_AD3 AA20 PCI_AD3
P_AD4 AA19 PCI_AD4
P_AD5 AF20 PCI_AD5
P_AD6 AE19 PCI_AD6
P_AD7 AE20 PCI_AD7
P_AD8 AB20 PCI_AD8
P_AD9 AB19 PCI_AD9
P_AD10 AA18 PCI_AD10
P_AD11 AB18 PCI_AD11
P_AD12 AE18 PCI_AD12
P_AD13 AF18 PCI_AD13
P_AD14 AC17 PCI_AD14
P_AD15 AA17 PCI_AD15
P_AD16 AB15 PCI_AD16
P_AD17 AF15 PCI_AD17
P_AD18 AE15 PCI_AD18
P_AD19 AF14 PCI_AD19
P_AD20 AE14 PCI_AD20
P_AD21 AA14 PCI_AD21
P_AD22 AB14 PCI_AD22
P_AD23 AC13 PCI_AD23
P_AD24 AB13 PCI_AD24
P_AD25 AE13 PCI_AD25
P_AD26 AA12 PCI_AD26
P_AD27 AF13 PCI_AD27
P_AD28 AB12 PCI_AD28
P_AD29 AF12 PCI_AD29
P_AD30 AE12 PCI_AD30
P_AD31 AF11 PCI_AD31
PCI_REQ0# AA22 PREQ#0 PREQ#0 25
PCI_REQ1# AE22 PREQ#1 PREQ#1 27
PCI_REQ2# AF21 PREQ#2
PCI_REQ3#/GPIO[38] AF22 PREQ#3
PCI_REQ4#/GPIO[40] AF23 PREQ#4
PCI_FRAME# AC15 P_FRAME- 25,27
PCI_IRDY# AD15 P_IRDY- 25,27
PCI_TRDY# AB16 P_TRDY- 25,27
PCI_STOP# AE16 P_STOP- 25,27
PCI_DEVSEL# AA16 P_DEVSEL- 25,27
PCI_PAR AE17 P_PAR 25,27
PCI_PERR#/GPIO[43] AF16 P_PERR- 25,27
PCI_SERR# AF17 P_SERR- 25,27
PCI_PME#GPIO[30] AD11 P_PME- P_PME- 25,27
PCI_CLKRUN#/GPIO[42] AF25 PCI_CLKRUN# P_CLKRUN- 21,25,27
PCI_RST0# AE25
PCI_RST1# AD24 CARDBUS_RST-_R R276 33R_0402 CARDBUS_RST- 22,25,26
PCI_RST2# AE26 MINIPCI_RST#_R R271 33R_0402 MINIPCI_RST# 27
PCI_RST3# W22 IDERST#_R R275 33R_0402 IDERST# 29
25,27 C/BE0- C/BE0- AD19 PCI_C/BE0#
25,27 C/BE1- C/BE1- AB17 PCI_C/BE1#
25,27 C/BE2- C/BE2- AA15 PCI_C/BE2#
25,27 C/BE3- C/BE3- AA13 PCI_C/BE3#
PCI_INT[W]# AE11 PCI_INTW PCI_INTW 27
PCI_INT[X]# AB11 PCI_INTX PCI_INTX 27
PCI_INT[Y]# AC11 PCI_INTY PCI_INTY 25
PCI_INT[Z]# AA11 PCI_INTZ
25 PGNT#0 PGNT#0 AE21 PCI_GNT0#
27 PGNT#1 PGNT#1 AC21 PCI_GNT1#
AA21 PCI_GNT2#
AB24 PCI_GNT3#/GPIO[39]
AB22 PCI_GNT4#/GPIO[41]
PCI_CLK[0] AE24 PCI_CLK0_R R269 22R MINIPCI_CLK0 MINIPCI_CLK0 27
PCI_CLK[1] AF24 PCI_CLK1_R R266 22R CBP_CLK1 CBP_CLK1 25
PCI_CLK[2] AD23
PCI_CLK[3] AF23
PCI_CLK[4] AB23 PCI_CLK4_R R089 22R_0402_5%
PCI_CLKIN AC23 PCI_CLK4
C831 10PF_0402
C832 10PF_0402
C833 10PF_0402
RN023 8.2K-8P4R-0402 +3VRUN
P_IRDY- 7 8
P_STOP- 5 6
P_PERR- 3 4
P_SERR- 1 2
RN018 8.2K-8P4R-0402 +3VRUN
PCI_CLKRUN# 7 8
PREQ#0 5 6
P_TRDY- 3 4
P_DEVSEL- 1 2
RN024 8.2K-8P4R-0402 +3VRUN
PREQ#2 7 8
PREQ#1 5 6
PREQ#3 3 4
PREQ#4 1 2
RN017 8.2K-8P4R-0402 +3VRUN
PCI_INTY 7 8
PCI_INTX 5 6
PCI_INTW 3 4
P_FRAME- 1 2
+3VRUN
PCI_INTZ R067 8.2K_0402
GA20 R095 10K_0402
MCP51_TDI R092 10K_0402
MCP51_TMS R295 10K_0402
MCP51_TRST# R297 10K_0402
MCP51_TCK R077 10K_0402
+3VSUS
P_PME- R259 8.2K_0402
HTMCP_COMP_GND1
HTMCP_COMP_GND2
Place R within 0.6" of MCP51M
NEWCARD_RST#_R
CARDBUS_RST-_R
MINIPCI_RST#_R
IDERST#_R
PCI_CLK0_R
PCI_CLK1_R
Place R within 500mil of MCP51M
5
4
3
2
1
D
C
B
A

MSI CORPORATION

Title
MCP51M (HT/PCI/CPU)

Size	Document Number	Rev
B	MS-16332	0A

Date: Monday, April 10, 2006 Sheet 17 of 40

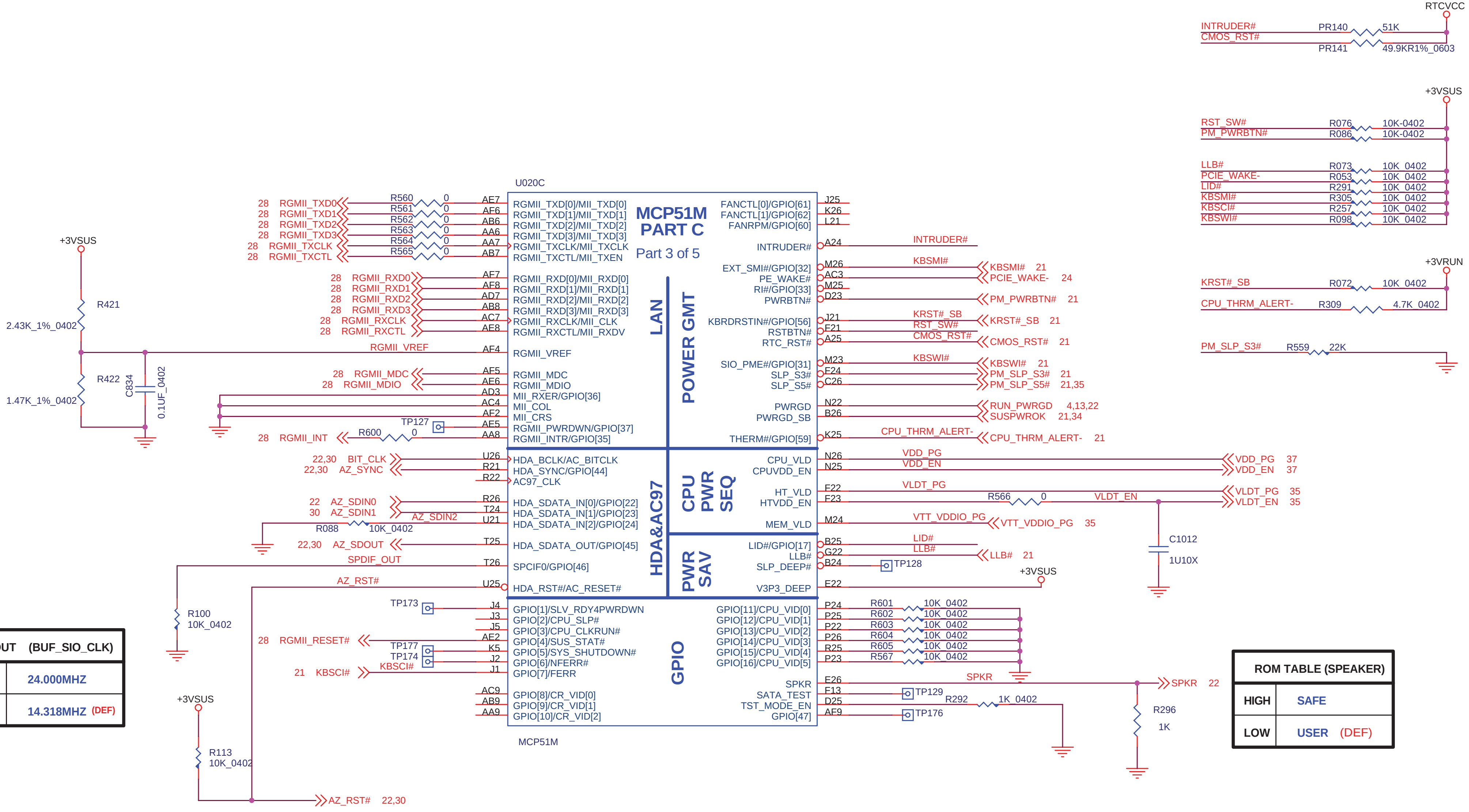
U020C
MCP51M
PART C
Part 3 of 5
MCP51M
LAN
POWER GMT
HDA&AC97
CPU PWR SEQ
PWR SAV
GPIO
RGMII_TXD[0]/MII_TXD[0]
RGMII_TXD[1]/MII_TXD[1]
RGMII_TXD[2]/MII_TXD[2]
RGMII_TXD[3]/MII_TXD[3]
RGMII_TXCLK/MII_TXCLK
RGMII_TXCTL/MII_TXEN
RGMII_RXD[0]/MII_RXD[0]
RGMII_RXD[1]/MII_RXD[1]
RGMII_RXD[2]/MII_RXD[2]
RGMII_RXD[3]/MII_RXD[3]
RGMII_RXCLK/MII_CLK
RGMII_RXCTL/MII_RXDV
RGMII_VREF
RGMII_MDC
RGMII_MDIO
MII_RXER/GPIO[36]
MII_COL
MII_CRS
RGMII_PWRDWN/GPIO[37]
RGMII_INTR/GPIO[35]
HDA_BCLK/AC_BITCLK
HDA_SYNC/GPIO[44]
AC97_CLK
HDA_SDATA_IN[0]/GPIO[22]
HDA_SDATA_IN[1]/GPIO[23]
HDA_SDATA_IN[2]/GPIO[24]
HDA_SDATA_OUT/GPIO[45]
SPCIF0/GPIO[46]
HDA_RST#/AC_RESET#
GPIO[1]/SLV_RDY4PWRDWN
GPIO[2]/CPU_SLP#
GPIO[3]/CPU_CLKRUN#
GPIO[4]/SUS_STAT#
GPIO[5]/SYS_SHUTDOWN#
GPIO[6]/NFERR#
GPIO[7]/FERR
GPIO[8]/CR_VID[0]
GPIO[9]/CR_VID[1]
GPIO[10]/CR_VID[2]
FANCTL[0]/GPIO[61]
FANCTL[1]/GPIO[62]
FANRPM/GPIO[60]
INTRUDER#
EXT_SMI#/GPIO[32]
PE_WAKE#
RI#/GPIO[33]
PWRBTN#
KBRDRSTIN#/GPIO[56]
RSTBTN#
RTC_RST#
SIO_PME#/GPIO[31]
SLP_S3#
SLP_S5#
PWRGD
PWRGD_SB
THERM#/GPIO[59]
CPU_VLD
CPUVDD_EN
HT_VLD
HTVDD_EN
MEM_VLD
LID#/GPIO[17]
LLB#
SLP_DEEP#
V3P3_DEEP
GPIO[11]/CPU_VID[0]
GPIO[12]/CPU_VID[1]
GPIO[13]/CPU_VID[2]
GPIO[14]/CPU_VID[3]
GPIO[15]/CPU_VID[4]
GPIO[16]/CPU_VID[5]
SPKR
SATA_TEST
TST_MODE_EN
GPIO[47]
AE7 AF6 AB6 AA6 AA7 AB7
AF7 AF8 AD7 AB8 AC7 AE8
AF4 AF5 AE6 AD3 AC4 AF2 AE5 AA8
U26 R21 R22 R26 T24 U21 T25 T26 U25
J4 J3 J5 AF2 K5 J2 J1 AC9 AB9 AA9
J25 K26 L21 A24 M26 AC3 M25 D23 J21 F21 A25 M23 F24 C26 N22 B26 K25
N26 N25 F22 F23 M24 B25 G22 B24 E22
P24 P25 P22 P26 R25 P23 E26 F13 D25 AF9
28 RGMII_TXD0
28 RGMII_TXD1
28 RGMII_TXD2
28 RGMII_TXD3
28 RGMII_TXCLK
28 RGMII_TXCTL
R560 0
R561 0
R562 0
R563 0
R564 0
R565 0
28 RGMII_RXD0
28 RGMII_RXD1
28 RGMII_RXD2
28 RGMII_RXD3
28 RGMII_RXCLK
28 RGMII_RXCTL
RGMII_VREF
28 RGMII_MDC
28 RGMII_MDIO
TP127
28 RGMII_INT
R600 0
+3VSUS
R421
2.43K_1%_0402
R422
1.47K_1%_0402
C834
0.1UF_0402
22,30 BIT_CLK
22,30 AZ_SYNC
22 AZ_SDIN0
30 AZ_SDIN1
AZ_SDIN2
R088 10K_0402
22,30 AZ_SDOUT
SPDIF_OUT
AZ_RST#
R100
10K_0402
TP173
28 RGMII_RESET#
TP177
TP174
KBSCI#
21 KBSCI#
+3VSUS
R113
10K_0402
AZ_RST# 22,30
INTRUDER#
KBSMI#
KBSMI# 21
PCIE_WAKE- 24
PM_PWRBTN# 21
KRST#_SB
RST_SW#
CMOS_RST#
KRST#_SB 21
CMOS_RST# 21
KBSWI#
KBSWI# 21
PM_SLP_S3# 21
PM_SLP_S5# 21,35
RUN_PWRGD 4,13,22
SUSPWROK 21,34
CPU_THRM_ALERT-
CPU_THRM_ALERT- 21
VDD_PG
VDD_EN
VDD_PG 37
VDD_EN 37
VLDT_PG
R566 0
VLDT_EN
VLDT_PG 35
VLDT_EN 35
VTT_VDDIO_PG
VTT_VDDIO_PG 35
C1012
1U10X
LID#
LLB#
LLB# 21
TP128
+3VSUS
R601 10K_0402
R602 10K_0402
R603 10K_0402
R604 10K_0402
R605 10K_0402
R567 10K_0402
SPKR
SPKR 22
TP129
R292 1K_0402
TP176
R296
1K
RTCVCC
INTRUDER#
CMOS_RST#
PR140 51K
PR141 49.9KR1%_0603
+3VSUS
RST_SW#
PM_PWRBTN#
R076 10K-0402
R086 10K-0402
LLB#
PCIE_WAKE-
LID#
KBSMI#
KBSCI#
KBSWI#
R073 10K_0402
R053 10K_0402
R291 10K_0402
R305 10K_0402
R257 10K_0402
R098 10K_0402
+3VRUN
KRST#_SB
R072 10K_0402
CPU_THRM_ALERT-
R309 4.7K_0402
PM_SLP_S3#
R559 22K

SPDIF_OUT	(BUF_SIO_CLK)
HIGH	24.000MHZ
LOW	14.318MHZ (DEF)

ROM TABLE (SPEAKER)	
HIGH	SAFE
LOW	USER (DEF)

AZ_RST#	(INTERNAL LAN)
HIGH	RGMII (DEF)
LOW	MII

MSI CORPORATION

Title
MCP51M (LAN/AC97/PMT/GPIO)

Size B
Document Number **MS-16332**
Rev 0A

Date: Monday, April 10, 2006
Sheet 18 of 40

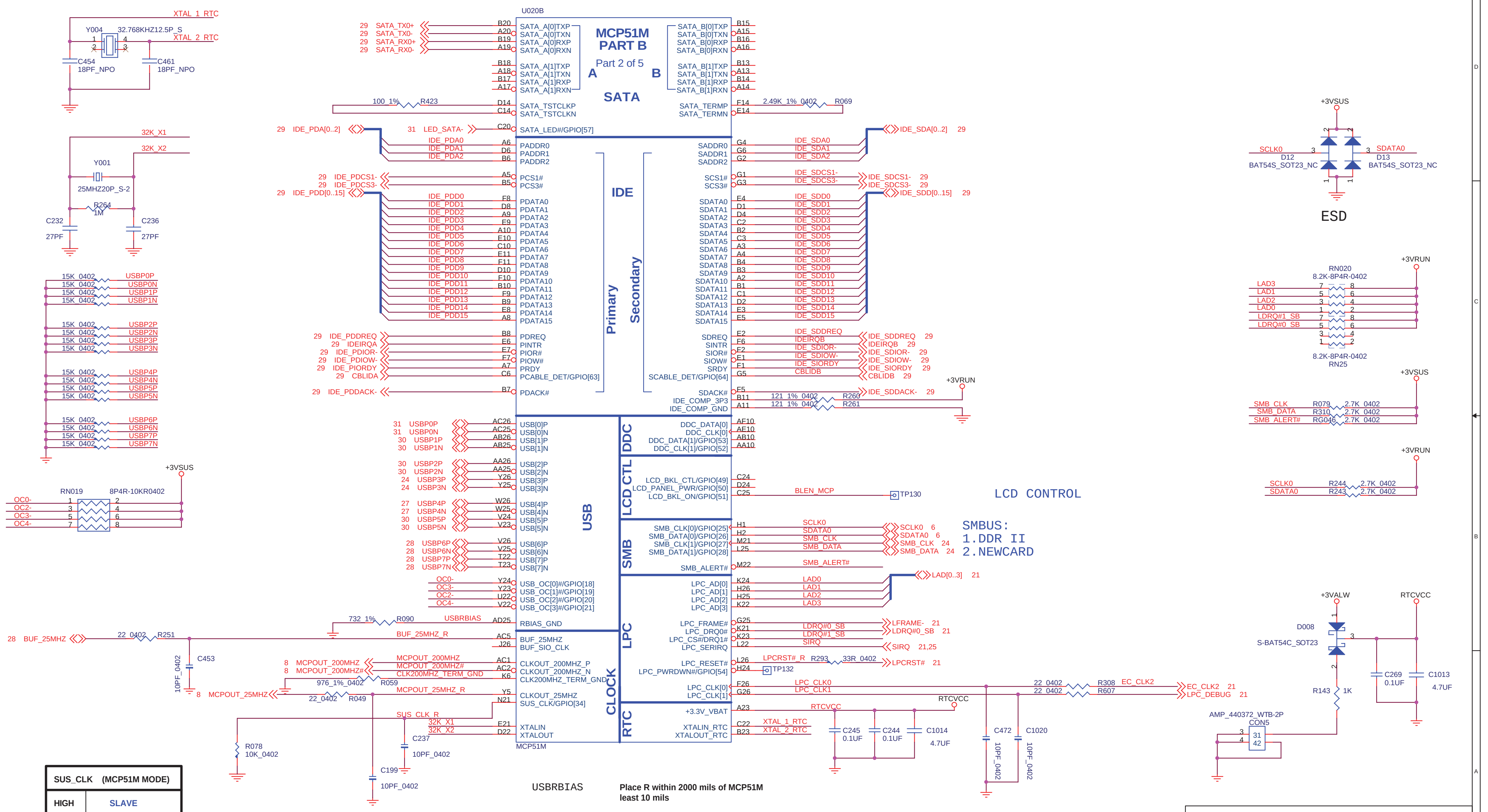
U020B
MCP51M
PART B
Part 2 of 5
A
B
SATA
IDE
Primary
Secondary
USB
DDC
LCD CTL
SMB
LPC
CLOCK
RTC
MCP51M
29 SATA_TX0+
29 SATA_TX0-
29 SATA_RX0+
29 SATA_RX0-
SATA_A[0]TXP
SATA_A[0]TXN
SATA_A[0]RXP
SATA_A[0]RXN
SATA_A[1]TXP
SATA_A[1]TXN
SATA_A[1]RXP
SATA_A[1]RXN
SATA_B[0]TXP
SATA_B[0]TXN
SATA_B[0]RXP
SATA_B[0]RXN
SATA_B[1]TXP
SATA_B[1]TXN
SATA_B[1]RXP
SATA_B[1]RXN
SATA_TSTCLKP
SATA_TSTCLKN
SATA_TERMP
SATA_TERMN
100_1% R423
2.49K_1%_0402 R069
29 IDE_PDA[0..2]
31 LED_SATA-
SATA_LED#/GPIO[57]
IDE_PDA0
IDE_PDA1
IDE_PDA2
PADDR0
PADDR1
PADDR2
SADDR0
SADDR1
SADDR2
IDE_SDA0
IDE_SDA1
IDE_SDA2
IDE_SDA[0..2] 29
29 IDE_PDCS1-
29 IDE_PDCS3-
PCS1#
PCS3#
SCS1#
SCS3#
IDE_SDCS1-
IDE_SDCS3-
IDE_SDCS1- 29
IDE_SDCS3- 29
29 IDE_PDD[0..15]
IDE_SDD[0..15] 29
IDE_PDD0 … IDE_PDD15
PDATA0 … PDATA15
SDATA0 … SDATA15
IDE_SDD0 … IDE_SDD15
29 IDE_PDDREQ
29 IDEIRQA
29 IDE_PDIOR-
29 IDE_PDIOW-
29 IDE_PIORDY
29 CBLIDA
29 IDE_PDDACK-
PDREQ
PINTR
PIOR#
PIOW#
PRDY
PCABLE_DET/GPIO[63]
PDACK#
SDREQ
SINTR
SIOR#
SIOW#
SRDY
SCABLE_DET/GPIO[64]
SDACK#
IDE_COMP_3P3
IDE_COMP_GND
IDE_SDDREQ
IDEIRQB
IDE_SDIOR-
IDE_SDIOW-
IDE_SIORDY
CBLIDB
IDE_SDDREQ 29
IDEIRQB 29
IDE_SDIOR- 29
IDE_SDIOW- 29
IDE_SIORDY 29
CBLIDB 29
IDE_SDDACK- 29
+3VRUN
121_1%_0402 R260
121_1%_0402 R261
XTAL_1_RTC
XTAL_2_RTC
Y004 32.768KHZ12.5P_S
C454 18PF_NPO
C461 18PF_NPO
32K_X1
32K_X2
Y001
25MHZ20P_S-2
R264 1M
C232 27PF
C236 27PF
15K_0402
USBP0P
USBP0N
USBP1P
USBP1N
USBP2P
USBP2N
USBP3P
USBP3N
USBP4P
USBP4N
USBP5P
USBP5N
USBP6P
USBP6N
USBP7P
USBP7N
+3VSUS
RN019 8P4R-10KR0402
OC0-
OC2-
OC3-
OC4-
31 USBP0P
31 USBP0N
30 USBP1P
30 USBP1N
30 USBP2P
30 USBP2N
24 USBP3P
24 USBP3N
27 USBP4P
27 USBP4N
30 USBP5P
30 USBP5N
28 USBP6P
28 USBP6N
28 USBP7P
28 USBP7N
USB[0]P
USB[0]N
USB[1]P
USB[1]N
USB[2]P
USB[2]N
USB[3]P
USB[3]N
USB[4]P
USB[4]N
USB[5]P
USB[5]N
USB[6]P
USB[6]N
USB[7]P
USB[7]N
USB_OC[0]#/GPIO[18]
USB_OC[1]#/GPIO[19]
USB_OC[2]#/GPIO[20]
USB_OC[3]#/GPIO[21]
RBIAS_GND
732_1% R090
USBRBIAS
28 BUF_25MHZ
22_0402 R251
BUF_25MHZ_R
C453 10PF_0402
BUF_25MHZ
BUF_SIO_CLK
8 MCPOUT_200MHZ
8 MCPOUT_200MHZ#
MCPOUT_200MHZ
MCPOUT_200MHZ#
CLK200MHZ_TERM_GND
976_1%_0402 R059
8 MCPOUT_25MHZ
22_0402 R049
MCPOUT_25MHZ_R
CLKOUT_200MHZ_P
CLKOUT_200MHZ_N
CLK200MHZ_TERM_GND
CLKOUT_25MHZ
SUS_CLK/GPIO[34]
SUS_CLK_R
32K_X1
32K_X2
XTALIN
XTALOUT
R078 10K_0402
C237 10PF_0402
C199 10PF_0402
DDC_DATA[0]
DDC_CLK[0]
DDC_DATA[1]/GPIO[53]
DDC_CLK[1]/GPIO[52]
LCD_BKL_CTL/GPIO[49]
LCD_PANEL_PWR/GPIO[50]
LCD_BKL_ON/GPIO[51]
BLEN_MCP
TP130
LCD CONTROL
SMB_CLK[0]/GPIO[25]
SMB_DATA[0]/GPIO[26]
SMB_CLK[1]/GPIO[27]
SMB_DATA[1]/GPIO[28]
SMB_ALERT#
SCLK0
SDATA0
SMB_CLK
SMB_DATA
SMB_ALERT#
SCLK0 6
SDATA0 6
SMB_CLK 24
SMB_DATA 24
SMBUS:
1.DDR II
2.NEWCARD
LPC_AD[0]
LPC_AD[1]
LPC_AD[2]
LPC_AD[3]
LAD0
LAD1
LAD2
LAD3
LAD[0..3] 21
LPC_FRAME#
LPC_DRQ0#
LPC_CS#/DRQ1#
LPC_SERIRQ
LDRQ#0_SB
LDRQ#1_SB
SIRQ
LFRAME- 21
LDRQ#0_SB 21
SIRQ 21,25
LPC_RESET#
LPC_PWRDWN#/GPIO[54]
LPCRST#_R R293 33R_0402
LPCRST# 21
TP132
LPC_CLK[0]
LPC_CLK[1]
LPC_CLK0
LPC_CLK1
22_0402 R308 EC_CLK2
22_0402 R607
EC_CLK2 21
LPC_DEBUG 21
+3.3V_VBAT
XTALIN_RTC
XTALOUT_RTC
RTCVCC
XTAL_1_RTC
XTAL_2_RTC
C245 0.1UF
C244 0.1UF
C1014 4.7UF
C472 10PF_0402
C1020 10PF_0402
+3VSUS
SCLK0
SDATA0
D12 BAT54S_SOT23_NC
D13 BAT54S_SOT23_NC
ESD
+3VRUN
RN020 8.2K-8P4R-0402
LAD3
LAD1
LAD2
LAD0
LDRQ#1_SB
LDRQ#0_SB
8.2K-8P4R-0402 RN25
+3VSUS
SMB_CLK R079 2.7K_0402
SMB_DATA R310 2.7K_0402
SMB_ALERT# RG046 2.7K_0402
+3VRUN
SCLK0 R244 2.7K_0402
SDATA0 R243 2.7K_0402
+3VALW
RTCVCC
D008
S-BAT54C_SOT23
C269 0.1UF
C1013 4.7UF
R143 1K
AMP_440372_WTB-2P
CON5

SUS_CLK	(MCP51M MODE)
HIGH	SLAVE
LOW	NORMAL (DEF)

USBRBIAS — Place R within 2000 mils of MCP51M least 10 mils

CLK200MHZ_TERM_GND — Place R within 1000 mils of MCP51M

MCPOUT_25MHZ_R
BUF_25MHZ_R
BUF_SIO_CLK_R — Place R within 500 mils of MCP51M

LPC_CLK0
LPCRST#_R — Place R within 500 mils of MCP51M

MSI CORPORATION

Title: **MCP51M (SATA/IDE/USB/CLKGEN)**

Size: Custom
Document Number: **MS-16332**
Rev: 0A

Date: Monday, April 10, 2006
Sheet 19 of 40

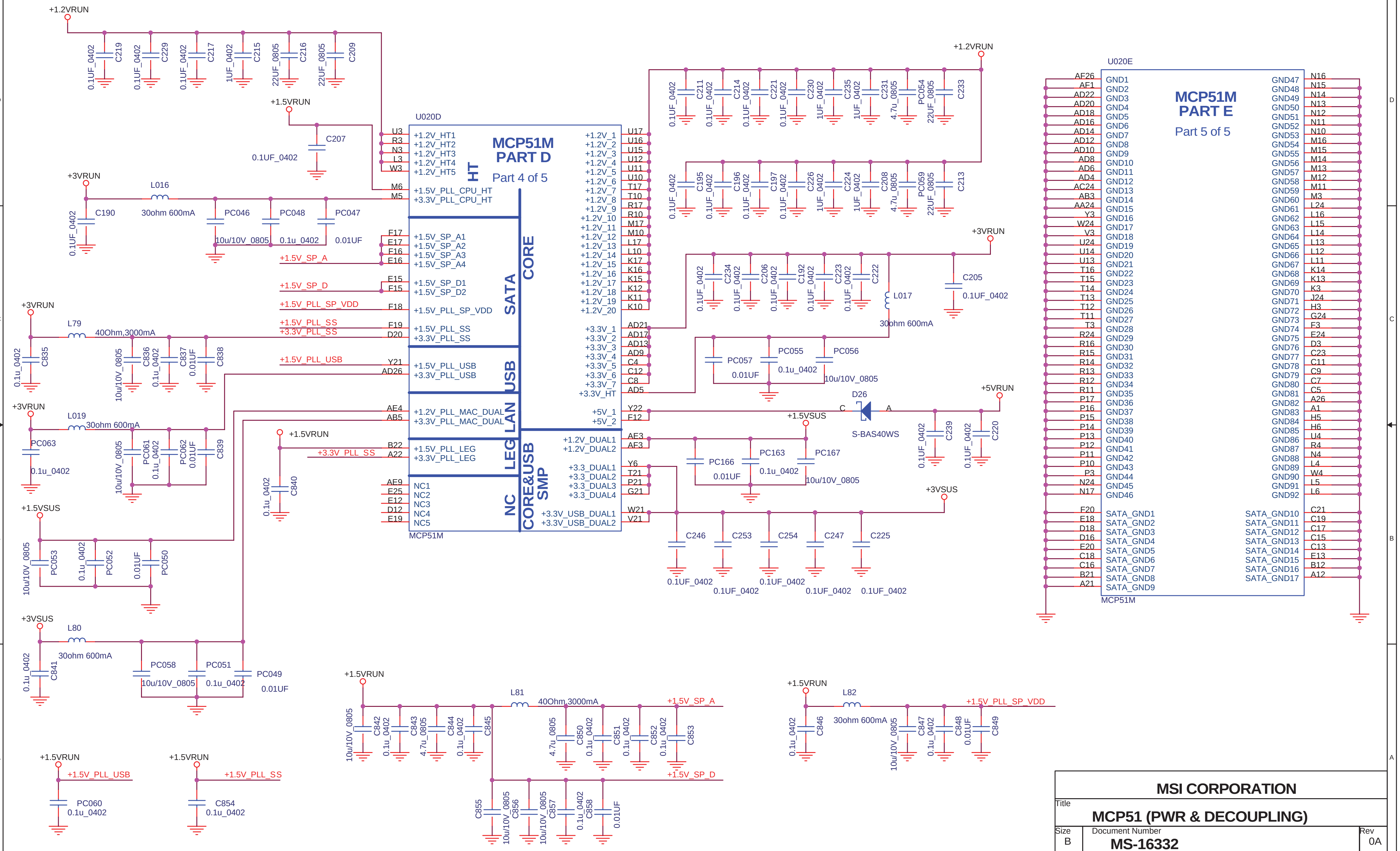
+1.2VRUN
C219 0.1UF_0402
C229 0.1UF_0402
C217 0.1UF_0402
C215 1UF_0402
C216 22UF_0805
C209 22UF_0805
+1.5VRUN
C207
0.1UF_0402
+3VRUN
L016
30ohm 600mA
C190
0.1UF_0402
PC046
10u/10V_0805
PC048
0.1u_0402
PC047
0.01UF
+1.5V_SP_A
+1.5V_SP_D
+1.5V_PLL_SP_VDD
+1.5V_PLL_SS
+3.3V_PLL_SS
+1.5V_PLL_USB
+3VRUN
L79
40Ohm,3000mA
C835 0.1u_0402
C836 10u/10V_0805
C837 0.1u_0402
C838 0.01UF
+3VRUN
L019
30ohm 600mA
PC063
0.1u_0402
PC061 10u/10V_0805
PC062 0.1u_0402
C839 0.01UF
+1.5VRUN
+3.3V_PLL_SS
C840 0.1u_0402
+1.5VSUS
PC053 10u/10V_0805
PC052 0.1u_0402
PC050 0.01UF
+3VSUS
L80
30ohm 600mA
C841 0.1u_0402
PC058
10u/10V_0805
PC051
0.1u_0402
PC049
0.01UF
+1.5VRUN
+1.5V_PLL_USB
PC060
0.1u_0402
+1.5VRUN
+1.5V_PLL_SS
C854
0.1u_0402
U020D
MCP51M
PART D
Part 4 of 5
HT
CORE
SATA
USB
LAN
LEG
NC
CORE&USB
SMP
U3 +1.2V_HT1
R3 +1.2V_HT2
N3 +1.2V_HT3
L3 +1.2V_HT4
W3 +1.2V_HT5
M6 +1.5V_PLL_CPU_HT
M5 +3.3V_PLL_CPU_HT
F17 +1.5V_SP_A1
E17 +1.5V_SP_A2
F16 +1.5V_SP_A3
E16 +1.5V_SP_A4
E15 +1.5V_SP_D1
F15 +1.5V_SP_D2
F18 +1.5V_PLL_SP_VDD
F19 +1.5V_PLL_SS
D20 +3.3V_PLL_SS
Y21 +1.5V_PLL_USB
AD26 +3.3V_PLL_USB
AE4 +1.2V_PLL_MAC_DUAL
AB5 +3.3V_PLL_MAC_DUAL
B22 +1.5V_PLL_LEG
A22 +3.3V_PLL_LEG
AE9 NC1
E25 NC2
E12 NC3
D12 NC4
E19 NC5
MCP51M
+1.2V_1 U17
+1.2V_2 U16
+1.2V_3 U15
+1.2V_4 U12
+1.2V_5 U11
+1.2V_6 U10
+1.2V_7 T17
+1.2V_8 T10
+1.2V_9 R17
+1.2V_10 R10
+1.2V_11 M17
+1.2V_12 M10
+1.2V_13 L17
+1.2V_14 L10
+1.2V_15 K17
+1.2V_16 K16
+1.2V_17 K15
+1.2V_18 K12
+1.2V_19 K11
+1.2V_20 K10
+3.3V_1 AD21
+3.3V_2 AD17
+3.3V_3 AD13
+3.3V_4 AD9
+3.3V_5 C4
+3.3V_6 C12
+3.3V_7 C8
+3.3V_HT AD5
+5V_1 Y22
+5V_2 F12
+1.2V_DUAL1 AE3
+1.2V_DUAL2 AF3
+3.3_DUAL1 Y6
+3.3_DUAL2 T21
+3.3_DUAL3 P21
+3.3_DUAL4 G21
+3.3V_USB_DUAL1 W21
+3.3V_USB_DUAL2 V21
+1.2VRUN
C211 0.1UF_0402
C214 0.1UF_0402
C221 0.1UF_0402
C230 0.1UF_0402
C235 1UF_0402
C231 1UF_0402
PC054 4.7u_0805
C233 22UF_0805
C195 0.1UF_0402
C196 0.1UF_0402
C197 0.1UF_0402
C226 0.1UF_0402
C224 1UF_0402
C208 1UF_0402
PC059 4.7u_0805
C213 22UF_0805
+3VRUN
C234 0.1UF_0402
C206 0.1UF_0402
C192 0.1UF_0402
C223 0.1UF_0402
C222 0.1UF_0402
L017
30ohm 600mA
C205
0.1UF_0402
PC057
0.01UF
PC055
0.1u_0402
PC056
10u/10V_0805
D26
C
A
S-BAS40WS
+5VRUN
C239 0.1UF_0402
C220 0.1UF_0402
+1.5VSUS
PC166
0.01UF
PC163
0.1u_0402
PC167
10u/10V_0805
+3VSUS
C246
C253
C254
C247
C225
0.1UF_0402
0.1UF_0402
0.1UF_0402
0.1UF_0402
0.1UF_0402
+1.5VRUN
C842 10u/10V_0805
C843 0.1u_0402
C844 4.7u_0805
C845 0.1u_0402
L81
40Ohm,3000mA
+1.5V_SP_A
C850 4.7u_0805
C851 0.1u_0402
C852 0.1u_0402
C853 0.1u_0402
+1.5V_SP_D
C855 10u/10V_0805
C856 10u/10V_0805
C857 0.1u_0402
C858 0.01UF
+1.5VRUN
L82
30ohm 600mA
+1.5V_PLL_SP_VDD
C846 0.1u_0402
C847 10u/10V_0805
C848 0.1u_0402
C849 0.01UF
U020E
MCP51M
PART E
Part 5 of 5
AF26 GND1
AF1 GND2
AD22 GND3
AD20 GND4
AD18 GND5
AD16 GND6
AD14 GND7
AD12 GND8
AD10 GND9
AD8 GND10
AD6 GND11
AD4 GND12
AC24 GND13
AB3 GND14
AA24 GND15
Y3 GND16
W24 GND17
V3 GND18
U24 GND19
U14 GND20
U13 GND21
T16 GND22
T15 GND23
T14 GND24
T13 GND25
T12 GND26
T11 GND27
T3 GND28
R24 GND29
R16 GND30
R15 GND31
R14 GND32
R13 GND33
R12 GND34
R11 GND35
P17 GND36
P16 GND37
P15 GND38
P14 GND39
P13 GND40
P12 GND41
P11 GND42
P10 GND43
P3 GND44
N24 GND45
N17 GND46
F20 SATA_GND1
E18 SATA_GND2
D18 SATA_GND3
D16 SATA_GND4
E20 SATA_GND5
C18 SATA_GND6
C16 SATA_GND7
B21 SATA_GND8
A21 SATA_GND9
GND47 N16
GND48 N15
GND49 N14
GND50 N13
GND51 N12
GND52 N11
GND53 N10
GND54 M16
GND55 M15
GND56 M14
GND57 M13
GND58 M12
GND59 M11
GND60 M3
GND61 L24
GND62 L16
GND63 L15
GND64 L14
GND65 L13
GND66 L12
GND67 L11
GND68 K14
GND69 K13
GND70 K3
GND71 J24
GND72 H3
GND73 G24
GND74 F3
GND75 E24
GND76 D3
GND77 C23
GND78 C11
GND79 C9
GND80 C7
GND81 C5
GND82 A26
GND83 A1
GND84 H5
GND85 H6
GND86 U4
GND87 R4
GND88 N4
GND89 L4
GND90 W4
GND91 L5
GND92 L6
SATA_GND10 C21
SATA_GND11 C19
SATA_GND12 C17
SATA_GND13 C15
SATA_GND14 C13
SATA_GND15 E13
SATA_GND16 B12
SATA_GND17 A12
MCP51M
5
4
3
2
1
D
C
B
A

MSI CORPORATION

Title
MCP51 (PWR & DECOUPLING)

Size	Document Number	Rev
B	**MS-16332**	0A

Date: Monday, April 10, 2006 Sheet 20 of 40

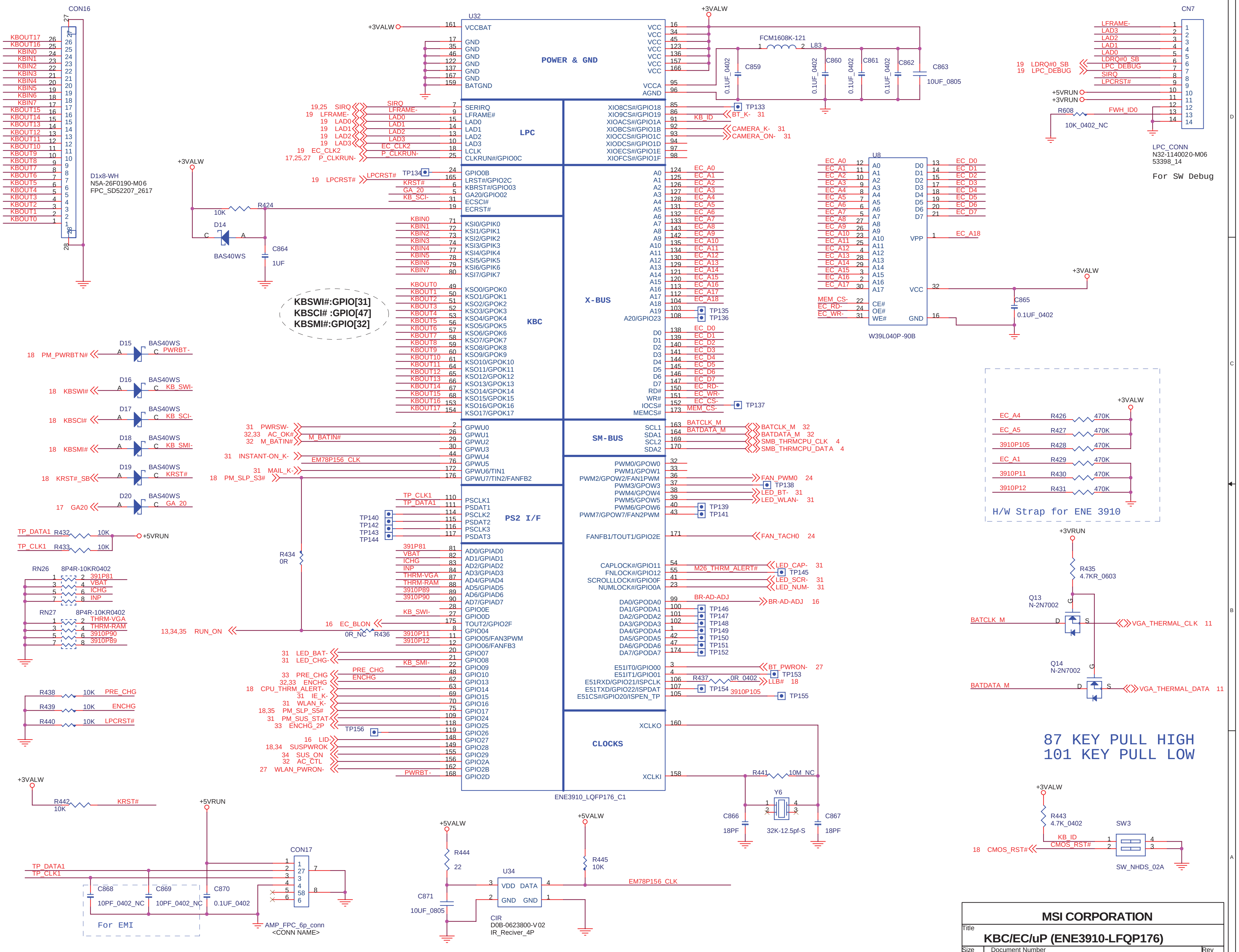
CON16
D1x8-WH
N5A-26F0190-M06
FPC_SD52207_2617
KBOUT17
KBOUT16
KBIN0
KBIN1
KBIN2
KBIN3
KBIN4
KBIN5
KBIN6
KBIN7
KBOUT15
KBOUT14
KBOUT13
KBOUT12
KBOUT11
KBOUT10
KBOUT9
KBOUT8
KBOUT7
KBOUT6
KBOUT5
KBOUT4
KBOUT3
KBOUT2
KBOUT1
KBOUT0
U32
+3VALW
VCCBAT
GND
BATGND
POWER & GND
VCC
VCCA
AGND
FCM1608K-121
L83
C859
C860
C861
C862
C863
0.1UF_0402
10UF_0805
TP133
KB_ID
BT_K-
CAMERA_K-
CAMERA_ON-
SERIRQ
LFRAME#
LAD0
LAD1
LAD2
LAD3
LCLK
CLKRUN#/GPIO0C
LPC
XIO8CS#/GPIO18
XIO9CS#/GPIO19
XIOACS#/GPIO1A
XIOBCS#/GPIO1B
XIOCCS#/GPIO1C
XIODCS#/GPIO1D
XIOECS#/GPIO1E
XIOFCS#/GPIO1F
SIRQ
LFRAME-
EC_CLK2
P_CLKRUN-
LPCRST#
TP134
GPIO0B
LRST#/GPIO2C
KBRST#/GPIO03
GA20/GPIO02
ECSCI#
ECRST#
KRST#
GA_20
KB_SCI-
+3VALW
10K
R424
D14
BAS40WS
C864
1UF
KSI0/GPIK0 … KSI7/GPIK7
KSO0/GPOK0 … KSO17/GPOK17
KBC
KBSWI#:GPIO[31]
KBSCI# :GPIO[47]
KBSMI#:GPIO[32]
X-BUS
A0 … A19
A20/GPIO23
EC_A0 … EC_A18
TP135
TP136
D0 … D7
EC_D0 … EC_D7
RD#
WR#
IOCS#
MEMCS#
EC_RD-
EC_WR-
EC_CS-
MEM_CS-
TP137
U8
W39L040P-90B
VPP
CE#
OE#
WE#
C865
0.1UF_0402
CN7
LPC_CONN
N32-1140020-M06
53398_14
For SW Debug
LDRQ#0_SB
LPC_DEBUG
+5VRUN
+3VRUN
R608
10K_0402_NC
FWH_ID0
D15
PM_PWRBTN#
PWRBT-
D16
KBSWI#
KB_SWI-
D17
KBSCI#
KB_SCI-
D18
KBSMI#
KB_SMI-
D19
KRST#_SB
KRST#
D20
GA20
GA_20
PWRSW-
AC_OK#
M_BATIN#
INSTANT-ON_K-
EM78P156_CLK
MAIL_K-
PM_SLP_S3#
GPWU0 … GPWU5
GPWU6/TIN1
GPWU7/TIN2/FANFB2
SM-BUS
SCL1
SDA1
SCL2
SDA2
BATCLK_M
BATDATA_M
SMB_THRMCPU_CLK
SMB_THRMCPU_DATA
PWM0/GPOW0
PWM1/GPOW1
PWM2/GPOW2/FAN1PWM
PWM3/GPOW3
PWM4/GPOW4
PWM5/GPOW5
PWM6/GPOW6
PWM7/GPOW7/FAN2PWM
FAN_PWM0
TP138
LED_BT-
LED_WLAN-
TP139
TP141
PS2 I/F
PSCLK1
PSDAT1
PSCLK2
PSDAT2
PSCLK3
PSDAT3
TP_CLK1
TP_DATA1
TP140
TP142
TP143
TP144
FANFB1/TOUT1/GPIO2E
FAN_TACH0
TP_DATA1
R432
TP_CLK1
R433
10K
+5VRUN
RN26
8P4R-10KR0402
391P81
VBAT
ICHG
INP
RN27
THRM-VGA
THRM-RAM
3910P90
3910P89
R434
0R
AD0/GPIAD0 … AD7/GPIAD7
GPIO0E
GPIO0D
TOUT2/GPIO2F
GPIO04
GPIO05/FAN3PWM
GPIO06/FANFB3
GPIO07 … GPIO2D
EC_BLON
R436
0R_NC
RUN_ON
3910P11
3910P12
CAPLOCK#/GPIO11
FNLOCK#/GPIO12
SCROLLLOCK#/GPIO0F
NUMLOCK#/GPIO0A
M26_THRM_ALERT#
LED_CAP-
TP145
LED_SCR-
LED_NUM-
DA0/GPODA0 … DA7/GPODA7
BR-AD-ADJ
TP146 … TP152
E51IT0/GPIO00
E51IT1/GPIO01
E51RXD/GPIO21/ISPCLK
E51TXD/GPIO22/ISPDAT
E51CS#/GPIO20/ISPEN_TP
BT_PWRON-
TP153
R437
0R_0402
LLB#
TP154
3910P105
TP155
LED_BAT-
LED_CHG-
PRE_CHG
ENCHG
CPU_THRM_ALERT-
IE_K-
WLAN_K-
PM_SLP_S5#
PM_SUS_STAT-
ENCHG_2P
TP156
LID-
SUSPWROK
SUS_ON
AC_CTL
WLAN_PWRON-
PWRBT-
CLOCKS
XCLKO
XCLKI
ENE3910_LQFP176_C1
R441
10M_NC
Y6
32K-12.5pf-S
C866
C867
18PF
R438
R439
R440
10K
PRE_CHG
ENCHG
LPCRST#
R442
KRST#
CON17
AMP_FPC_6p_conn
<CONN NAME>
C868
C869
C870
10PF_0402_NC
0.1UF_0402
For EMI
+5VALW
R444
22
C871
10UF_0805
U34
VDD
DATA
GND
CIR
D0B-0623800-V02
IR_Reciver_4P
R445
10K
H/W Strap for ENE 3910
EC_A4
EC_A5
3910P105
EC_A1
3910P11
3910P12
R426
R427
R428
R429
R430
R431
470K
R435
4.7KR_0603
Q13
N-2N7002
Q14
N-2N7002
VGA_THERMAL_CLK
VGA_THERMAL_DATA
87 KEY PULL HIGH
101 KEY PULL LOW
R443
4.7K_0402
SW3
SW_NHDS_02A
CMOS_RST#
KB_ID

MSI CORPORATION

Title
KBC/EC/uP (ENE3910-LFQP176)

Size	Document Number	Rev
Custom	MS-16332	0.A

Date: Monday, April 10, 2006 | Sheet 21 of 40

	High (turn on)	Low (Mute)
DEPOP_MUTE#	Normal keep High	Power On/Down & S3
GPIO1	Normal keep High	Line-out Jack IN

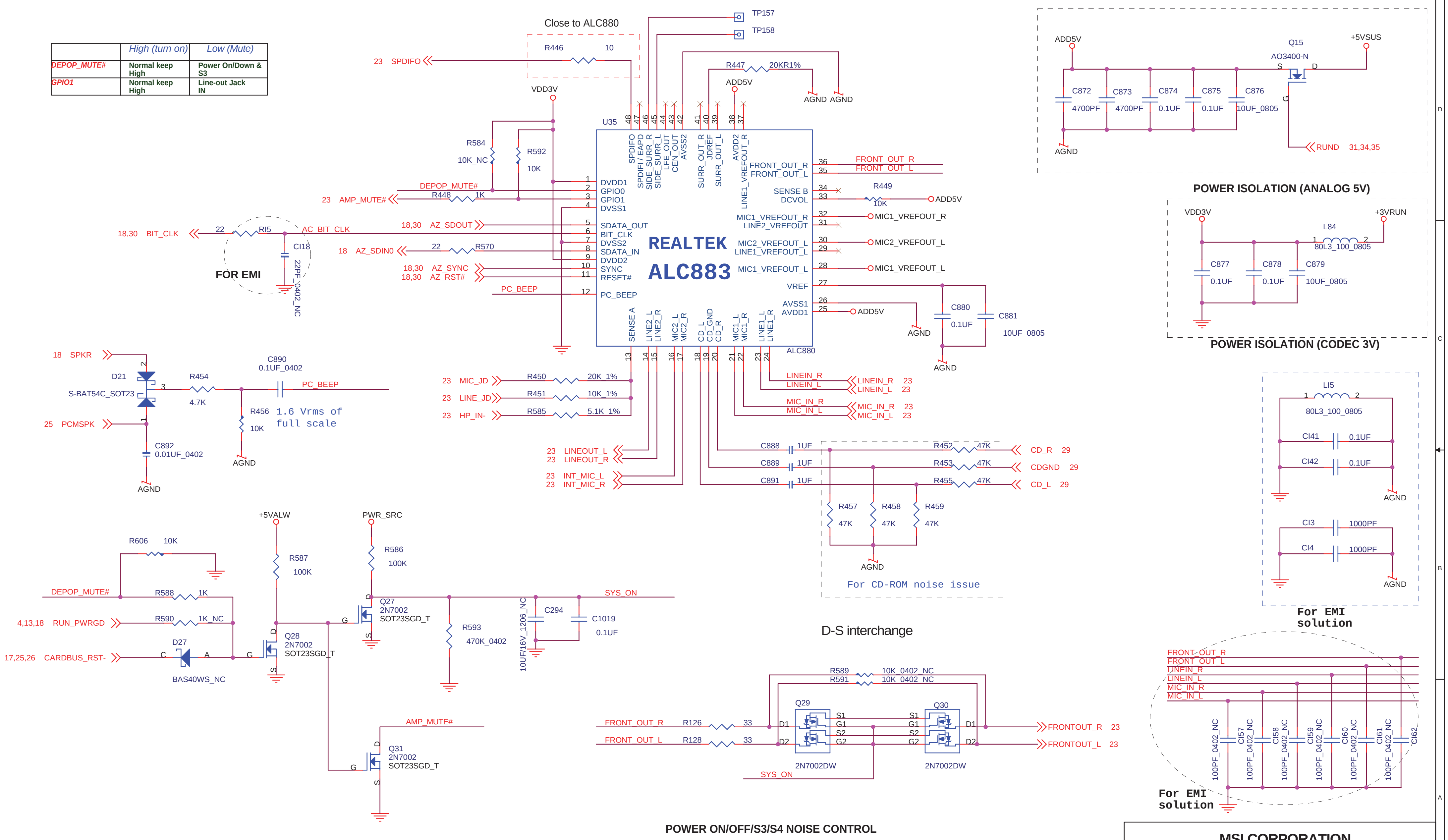
Close to ALC880
R446 10
23 SPDIFO
TP157
TP158
R447 20KR1%
ADD5V
AGND AGND
VDD3V
U35
48 47 46 45 44 43 42 41 40 39 38 37
SPDIFO
SPDIFI / EAPD
SIDE_SURR_R
SIDE_SURR_L
LFE_OUT
CEN_OUT
AVSS2
SURR_OUT_R
JDREF
SURR_OUT_L
AVDD2
LINE1_VREFOUT_R
R584
10K_NC
R592
10K
DEPOP_MUTE#
23 AMP_MUTE#
R448 1K
DVDD1
GPIO0
GPIO1
DVSS1
SDATA_OUT
BIT_CLK
DVSS2
SDATA_IN
DVDD2
SYNC
RESET#
PC_BEEP
18,30 BIT_CLK
22 RI5
AC_BIT_CLK
CI18
22PF_0402_NC
FOR EMI
18,30 AZ_SDOUT
18 AZ_SDIN0
22 R570
18,30 AZ_SYNC
18,30 AZ_RST#
PC_BEEP
REALTEK
ALC883
FRONT_OUT_R
FRONT_OUT_L
SENSE B
DCVOL
MIC1_VREFOUT_R
LINE2_VREFOUT
MIC2_VREFOUT_L
LINE1_VREFOUT_L
MIC1_VREFOUT_L
VREF
AVSS1
AVDD1
36 35 34 33 32 31 30 29 28 27 26 25
FRONT_OUT_R
FRONT_OUT_L
R449
10K
ADD5V
MIC1_VREFOUT_R
MIC2_VREFOUT_L
MIC1_VREFOUT_L
ADD5V
AGND
C880
0.1UF
C881
10UF_0805
AGND
SENSE A
LINE2_L
LINE2_R
MIC2_L
MIC2_R
CD_L
CD_GND
CD_R
MIC1_L
MIC1_R
LINE1_L
LINE1_R
ALC880
13 14 15 16 17 18 19 20 21 22 23 24
18 SPKR
D21
S-BAT54C_SOT23
R454
4.7K
C890
0.1UF_0402
PC_BEEP
R456
10K
1.6 Vrms of full scale
AGND
25 PCMSPK
C892
0.01UF_0402
AGND
23 MIC_JD
R450 20K_1%
23 LINE_JD
R451 10K_1%
23 HP_IN-
R585 5.1K_1%
LINEIN_R
LINEIN_L
LINEIN_R 23
LINEIN_L 23
MIC_IN_R
MIC_IN_L
MIC_IN_R 23
MIC_IN_L 23
23 LINEOUT_L
23 LINEOUT_R
23 INT_MIC_L
23 INT_MIC_R
C888 1UF
C889 1UF
C891 1UF
R452 47K
R453 47K
R455 47K
CD_R 29
CDGND 29
CD_L 29
R457 47K
R458 47K
R459 47K
AGND
For CD-ROM noise issue
ADD5V
Q15
AO3400-N
+5VSUS
S D G
C872 4700PF
C873 4700PF
C874 0.1UF
C875 0.1UF
C876 10UF_0805
AGND
RUND 31,34,35
POWER ISOLATION (ANALOG 5V)
VDD3V
+3VRUN
L84
80L3_100_0805
C877 0.1UF
C878 0.1UF
C879 10UF_0805
POWER ISOLATION (CODEC 3V)
LI5
80L3_100_0805
CI41 0.1UF
CI42 0.1UF
AGND
CI3 1000PF
CI4 1000PF
AGND
For EMI solution
+5VALW
PWR_SRC
R606 10K
R587 100K
R586 100K
DEPOP_MUTE#
R588 1K
4,13,18 RUN_PWRGD
R590 1K_NC
17,25,26 CARDBUS_RST-
D27
BAS40WS_NC
Q28
2N7002
SOT23SGD_T
Q27
2N7002
SOT23SGD_T
R593
470K_0402
C294
10UF/16V_1206_NC
C1019
0.1UF
SYS_ON
AMP_MUTE#
Q31
2N7002
SOT23SGD_T
D-S interchange
R589 10K_0402_NC
R591 10K_0402_NC
Q29
Q30
FRONT_OUT_R
FRONT_OUT_L
R126 33
R128 33
D1 D2 S1 G1 S2 G2
2N7002DW
2N7002DW
FRONTOUT_R 23
FRONTOUT_L 23
SYS_ON
POWER ON/OFF/S3/S4 NOISE CONTROL
FRONT_OUT_R
FRONT_OUT_L
LINEIN_R
LINEIN_L
MIC_IN_R
MIC_IN_L
CI57 100PF_0402_NC
CI58 100PF_0402_NC
CI59 100PF_0402_NC
CI60 100PF_0402_NC
CI61 100PF_0402_NC
CI62 100PF_0402_NC
For EMI solution

MSI CORPORATION

Title
Azalia CODEC(AL883)

Size Custom
Document Number MS-16322
Rev 1.0

Date: Monday, April 10, 2006
Sheet 22 of 40

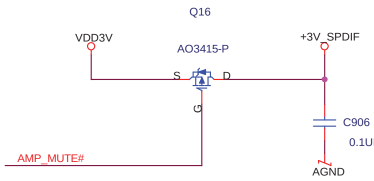
Q16
VDD3V
AO3415-P
+3V_SPDIF
S
D
G
C906
0.1UF
AMP_MUTE#
AGND

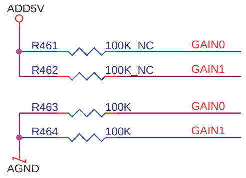
ADD5V
R461
100K_NC
GAIN0
R462
100K_NC
GAIN1
R463
100K
GAIN0
R464
100K
GAIN1
AGND

Av	GAIN0	GAIN1
6dB	0	0
10dB	0	1
15.6dB	1	0
21.6dB	1	1
4.3dB	X	X

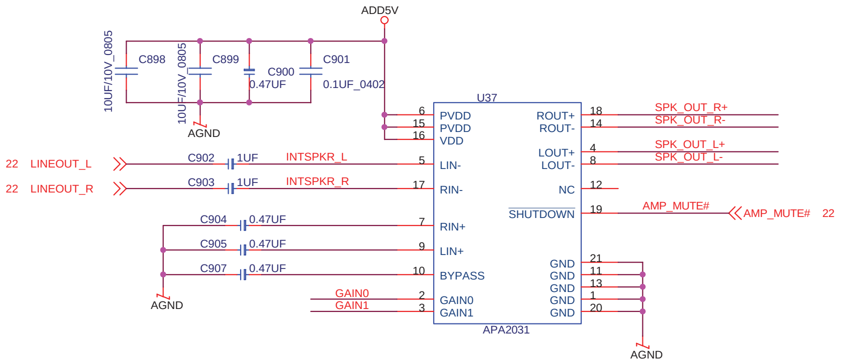
ADD5V
C898
10UF/10V_0805
C899
10UF/10V_0805
C900
0.47UF
C901
0.1UF_0402
AGND
U37
6 PVDD
15 PVDD
16 VDD
22 LINEOUT_L
C902 1UF
INTSPKR_L
5 LIN-
22 LINEOUT_R
C903 1UF
INTSPKR_R
17 RIN-
C904 0.47UF
7 RIN+
C905 0.47UF
9 LIN+
C907 0.47UF
10 BYPASS
GAIN0
2 GAIN0
GAIN1
3 GAIN1
AGND
APA2031
ROUT+ 18
ROUT- 14
LOUT+ 4
LOUT- 8
NC 12
SHUTDOWN 19
GND 21
GND 11
GND 13
GND 1
GND 20
SPK_OUT_R+
SPK_OUT_R-
SPK_OUT_L+
SPK_OUT_L-
AMP_MUTE#
AMP_MUTE# 22
AGND

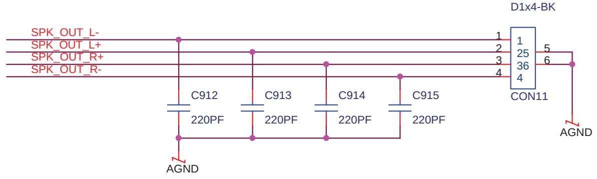
D1x4-BK
SPK_OUT_L-
SPK_OUT_L+
SPK_OUT_R+
SPK_OUT_R-
1
2
3
4
1
25
36
4
5
6
CON11
C912
220PF
C913
220PF
C914
220PF
C915
220PF
AGND
AGND

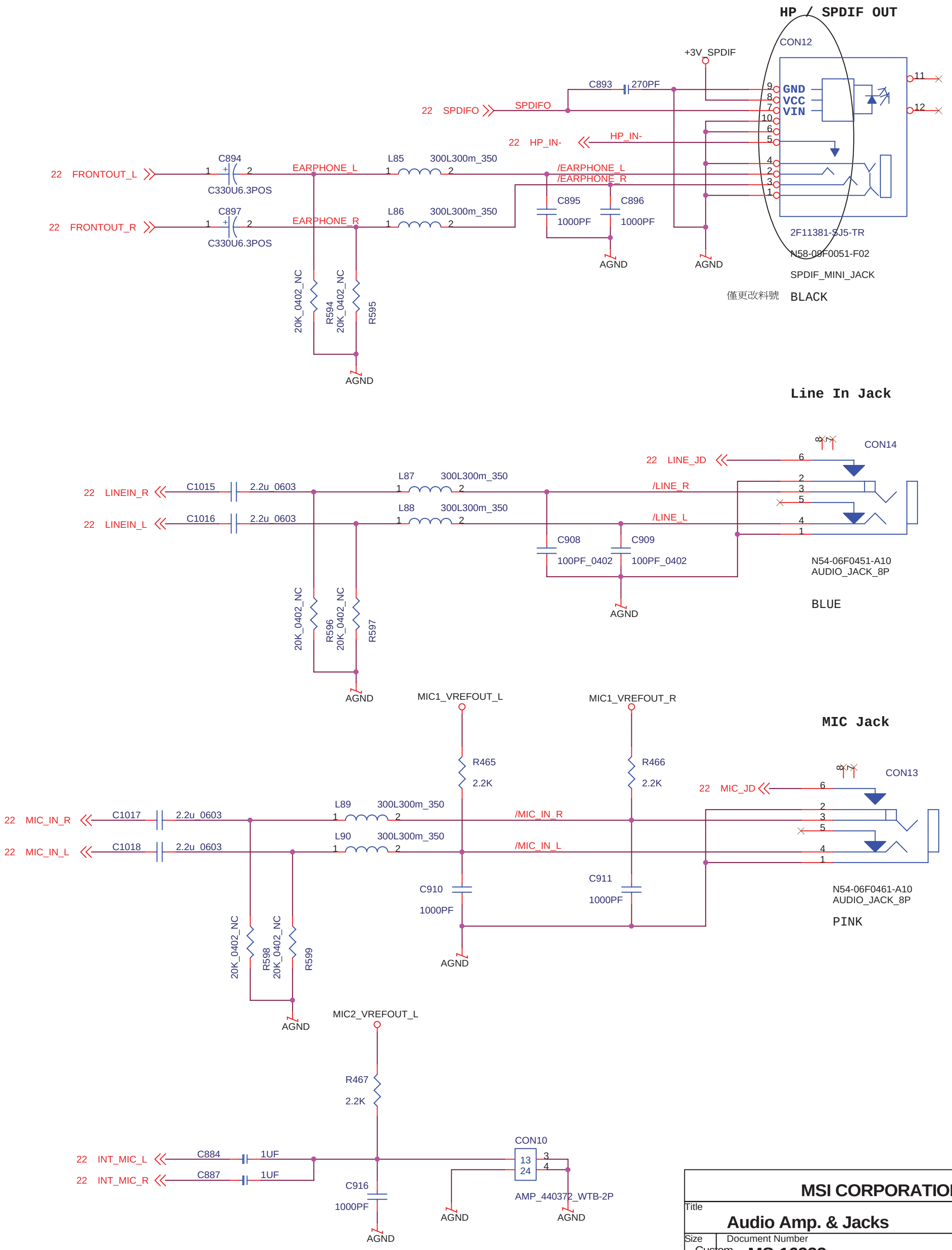
HP / SPDIF OUT
CON12
+3V_SPDIF
C893
270PF
22 SPDIFO
SPDIFO
22 HP_IN-
HP_IN-
GND
VCC
VIN
9
8
7
10
6
5
4
2
3
1
11
12
22 FRONTOUT_L
C894
C330U6.3POS
EARPHONE_L
L85
300L300m_350
/EARPHONE_L
/EARPHONE_R
22 FRONTOUT_R
C897
C330U6.3POS
EARPHONE_R
L86
300L300m_350
C895
1000PF
C896
1000PF
AGND
AGND
2F11381-SJ5-TR
N58-09F0051-F02
SPDIF_MINI_JACK
僅更改料號
BLACK
20K_0402_NC
R594
20K_0402_NC
R595
AGND
Line In Jack
CON14
22 LINE_JD
6
2
3
5
4
1
22 LINEIN_R
C1015
2.2u_0603
L87
300L300m_350
/LINE_R
22 LINEIN_L
C1016
2.2u_0603
L88
300L300m_350
/LINE_L
C908
100PF_0402
C909
100PF_0402
AGND
N54-06F0451-A10
AUDIO_JACK_8P
BLUE
20K_0402_NC
R596
20K_0402_NC
R597
AGND
MIC1_VREFOUT_L
MIC1_VREFOUT_R
MIC Jack
R465
2.2K
R466
2.2K
CON13
22 MIC_JD
22 MIC_IN_R
C1017
2.2u_0603
L89
300L300m_350
/MIC_IN_R
22 MIC_IN_L
C1018
2.2u_0603
L90
300L300m_350
/MIC_IN_L
C910
1000PF
C911
1000PF
AGND
N54-06F0461-A10
AUDIO_JACK_8P
PINK
20K_0402_NC
R598
20K_0402_NC
R599
AGND
MIC2_VREFOUT_L
R467
2.2K
22 INT_MIC_L
C884
1UF
22 INT_MIC_R
C887
1UF
CON10
13
24
3
4
AMP_440372_WTB-2P
C916
1000PF
AGND
AGND
AGND

MSI CORPORATION

Title

Audio Amp. & Jacks

Size	Document Number	Rev
Custom	MS-16332	0B

Date: Monday, April 10, 2006 Sheet 23 of 40

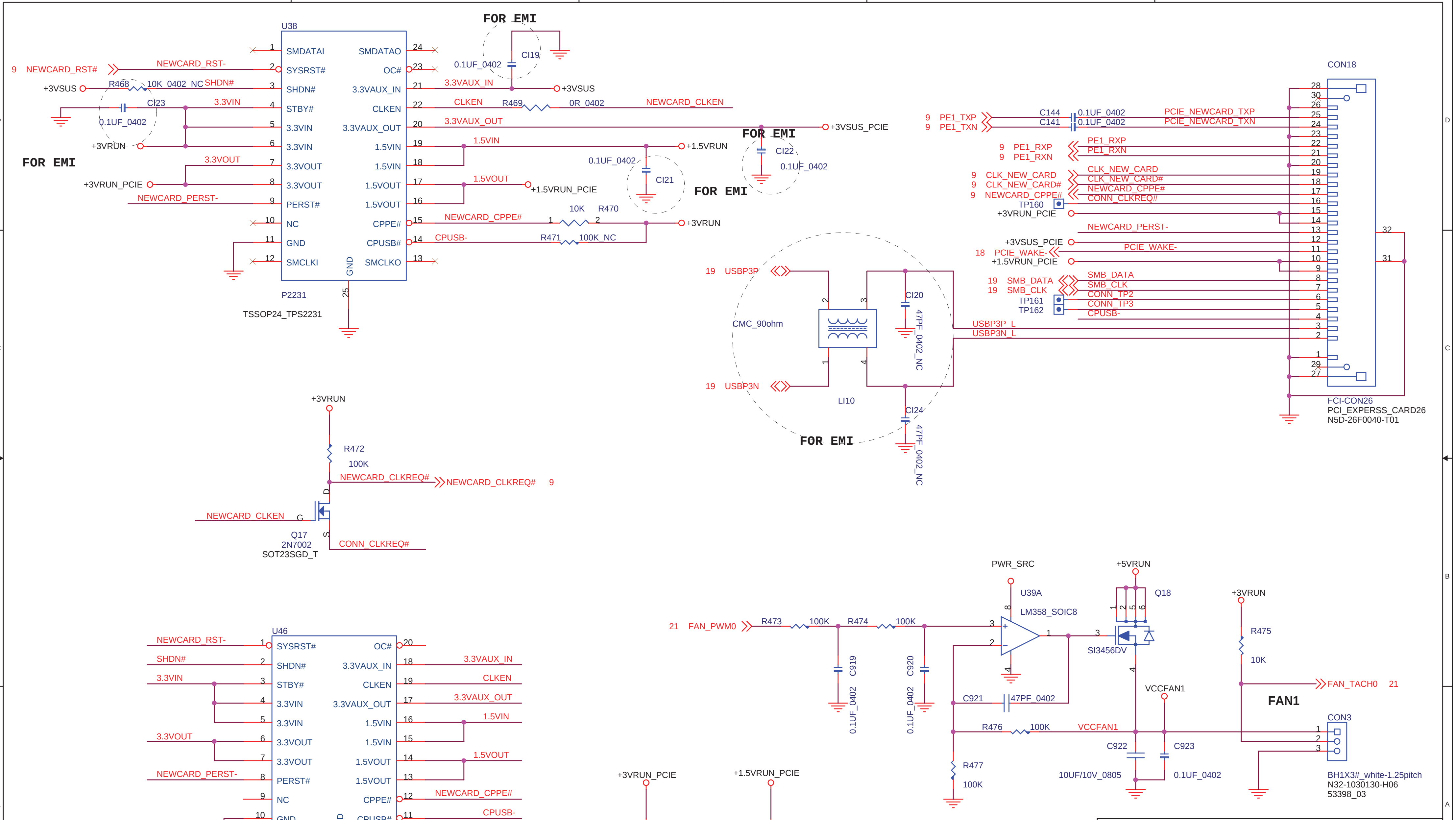
FOR EMI
U38
SMDATAI
SYSRST#
SHDN#
STBY#
3.3VIN
3.3VIN
3.3VOUT
3.3VOUT
PERST#
NC
GND
SMCLKI
SMDATAO
OC#
3.3VAUX_IN
CLKEN
3.3VAUX_OUT
1.5VIN
1.5VIN
1.5VOUT
1.5VOUT
CPPE#
CPUSB#
SMCLKO
GND
P2231
TSSOP24_TPS2231
9 NEWCARD_RST#
NEWCARD_RST-
+3VSUS
R468 10K_0402_NC
SHDN#
CI23
0.1UF_0402
3.3VIN
+3VRUN
3.3VOUT
+3VRUN_PCIE
NEWCARD_PERST-
CI19
0.1UF_0402
3.3VAUX_IN
+3VSUS
CLKEN
R469
0R_0402
NEWCARD_CLKEN
3.3VAUX_OUT
+3VSUS_PCIE
1.5VIN
+1.5VRUN
1.5VOUT
+1.5VRUN_PCIE
CI21
0.1UF_0402
CI22
0.1UF_0402
NEWCARD_CPPE#
10K R470
CPUSB-
R471 100K_NC
+3VRUN
CON18
9 PE1_TXP
9 PE1_TXN
C144 0.1UF_0402
C141 0.1UF_0402
PCIE_NEWCARD_TXP
PCIE_NEWCARD_TXN
9 PE1_RXP
9 PE1_RXN
9 CLK_NEW_CARD
9 CLK_NEW_CARD#
9 NEWCARD_CPPE#
CONN_CLKREQ#
TP160
+3VRUN_PCIE
NEWCARD_PERST-
+3VSUS_PCIE
18 PCIE_WAKE-
+1.5VRUN_PCIE
19 SMB_DATA
19 SMB_CLK
CONN_TP2
CONN_TP3
TP161
TP162
CPUSB-
USBP3P_L
USBP3N_L
FCI-CON26
PCI_EXPERSS_CARD26
N5D-26F0040-T01
19 USBP3P
19 USBP3N
CMC_90ohm
LI10
CI20
47PF_0402_NC
CI24
47PF_0402_NC
+3VRUN
R472
100K
NEWCARD_CLKREQ#
NEWCARD_CLKREQ# 9
NEWCARD_CLKEN
Q17
2N7002
SOT23SGD_T
CONN_CLKREQ#
U46
P2231-20pin_NC
+3VRUN_PCIE
C917
10UF_0805_NC
+1.5VRUN_PCIE
C918
10UF_0805_NC
PWR_SRC
U39A
LM358_SOIC8
21 FAN_PWM0
R473 100K
R474 100K
C919 0.1UF_0402
C920 0.1UF_0402
C921 47PF_0402
R476 100K
VCCFAN1
R477
100K
+5VRUN
Q18
SI3456DV
VCCFAN1
C922
10UF/10V_0805
C923
0.1UF_0402
+3VRUN
R475
10K
FAN_TACH0 21
FAN1
CON3
BH1X3#_white-1.25pitch
N32-1030130-H06
53398_03

MSI CORPORATION

Title
NEW CARD & FAN

Size B
Document Number MS-16332
Rev 0.A

Date: Monday, April 10, 2006
Sheet 24 of 40

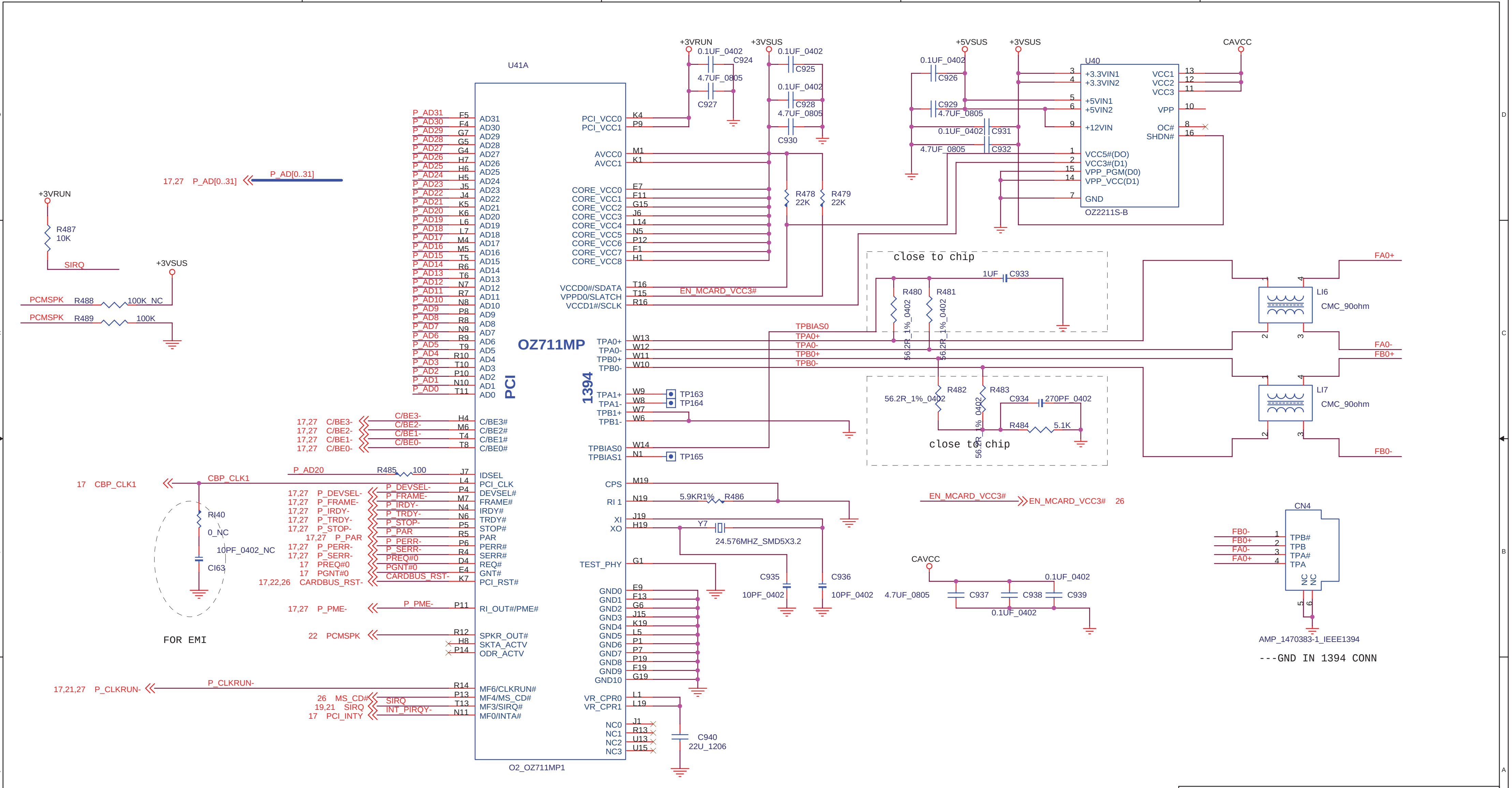
U41A
OZ711MP
PCI
1394
O2_OZ711MP1
P_AD31 … P_AD0
AD31 … AD0
17,27 P_AD[0..31]
P_AD[0..31]
C/BE3# C/BE2# C/BE1# C/BE0#
17,27 C/BE3-
17,27 C/BE2-
17,27 C/BE1-
17,27 C/BE0-
P_AD20
R485 100
IDSEL
PCI_CLK
17 CBP_CLK1
CBP_CLK1
RI40
0_NC
CI63
10PF_0402_NC
FOR EMI
DEVSEL#
FRAME#
IRDY#
TRDY#
STOP#
PAR
PERR#
SERR#
REQ#
GNT#
PCI_RST#
17,27 P_DEVSEL-
17,27 P_FRAME-
17,27 P_IRDY-
17,27 P_TRDY-
17,27 P_STOP-
17,27 P_PAR
17,27 P_PERR-
17,27 P_SERR-
17 PREQ#0
17 PGNT#0
17,22,26 CARDBUS_RST-
RI_OUT#/PME#
17,27 P_PME-
SPKR_OUT#
SKTA_ACTV
ODR_ACTV
22 PCMSPK
MF6/CLKRUN#
MF4/MS_CD#
MF3/SIRQ#
MF0/INTA#
17,21,27 P_CLKRUN-
26 MS_CD#
19,21 SIRQ
17 PCI_INTY
INT_PIRQY-
+3VRUN
R487
10K
SIRQ
+3VSUS
PCMSPK R488 100K_NC
PCMSPK R489 100K
PCI_VCC0
PCI_VCC1
AVCC0
AVCC1
CORE_VCC0 … CORE_VCC8
VCCD0#/SDATA
VPPD0/SDATA
VCCD1#/SCLK
EN_MCARD_VCC3#
TPA0+ TPA0- TPB0+ TPB0-
TPA1+ TPA1- TPB1+ TPB1-
TP163 TP164 TP165
TPBIAS0
TPBIAS1
CPS
RI 1
XI
XO
5.9KR1% R486
Y7
24.576MHZ_SMD5X3.2
C935 10PF_0402
C936 10PF_0402
TEST_PHY
GND0 … GND10
VR_CPR0
VR_CPR1
C940 22U_1206
NC0 NC1 NC2 NC3
C924 0.1UF_0402
C927 4.7UF_0805
C925 0.1UF_0402
C928 0.1UF_0402
C930 4.7UF_0805
R478 22K
R479 22K
+5VSUS
U40
OZ2211S-B
+3.3VIN1
+3.3VIN2
+5VIN1
+5VIN2
+12VIN
VCC5#(DO)
VCC3#(D1)
VPP_PGM(D0)
VPP_VCC(D1)
GND
VCC1 VCC2 VCC3
VPP
OC#
SHDN#
CAVCC
C926 0.1UF_0402
C929 4.7UF_0805
C931 0.1UF_0402
C932 4.7UF_0805
close to chip
1UF C933
R480 56.2R_1%_0402
R481 56.2R_1%_0402
TPBIAS0
TPA0+
TPA0-
TPB0+
TPB0-
R482 56.2R_1%_0402
R483 56.2R_1%_0402
C934 270PF_0402
R484 5.1K
close to chip
LI6 CMC_90ohm
LI7 CMC_90ohm
FA0+ FA0- FB0+ FB0-
EN_MCARD_VCC3# 26
CN4
TPB# TPB TPA# TPA
NC NC
AMP_1470383-1_IEEE1394
---GND IN 1394 CONN
CAVCC
C937 4.7UF_0805
C938 0.1UF_0402
C939 0.1UF_0402
5 4 3 2 1
D C B A

MSI CORPORATION

Title
PCI / 1394 (OZ711MP1)

Size: Custom
Document Number: **MS-16332**
Rev: 0.A

Date: Monday, April 10, 2006
Sheet 25 of 40

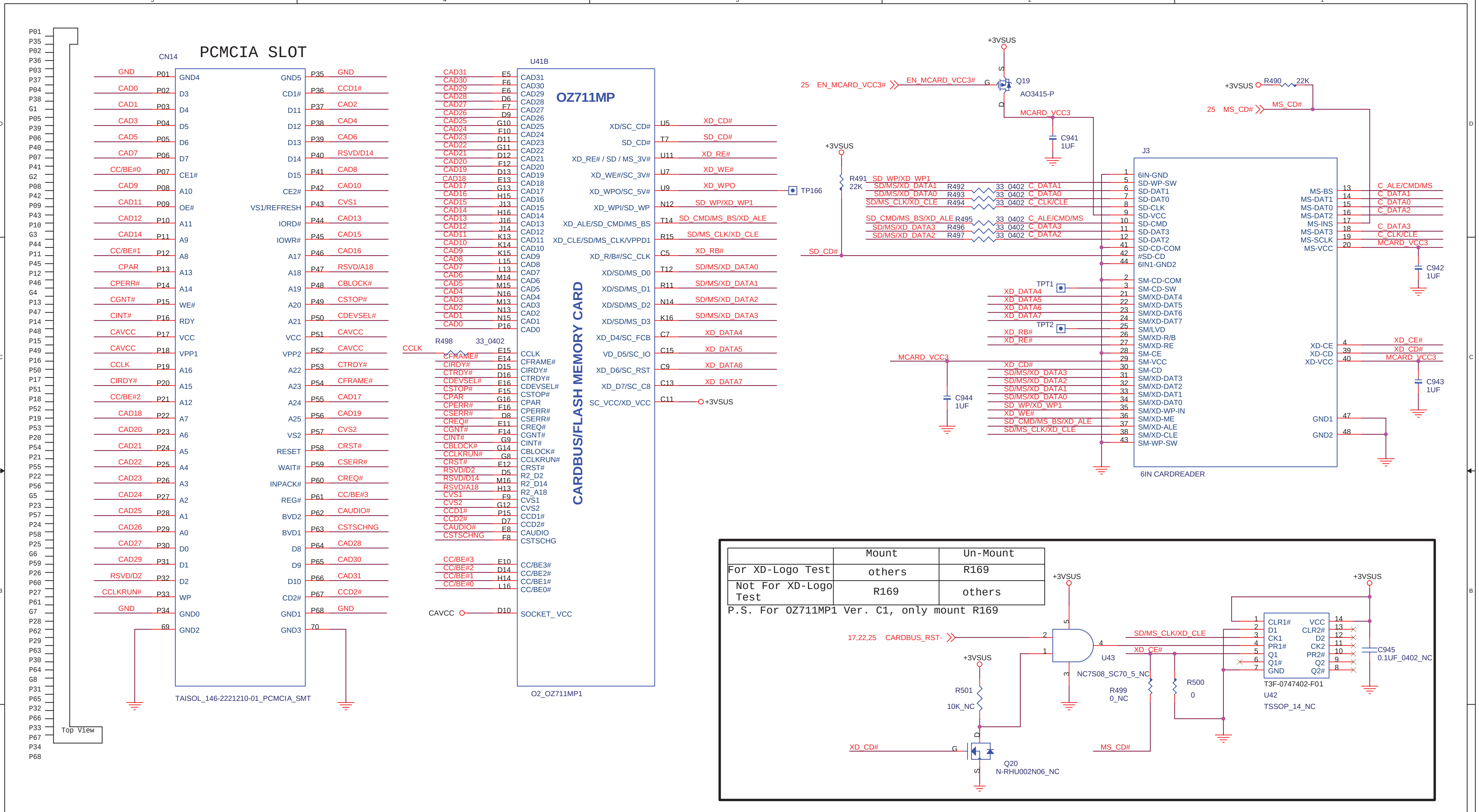
PCMCIA SLOT
CN14
TAISOL_146-2221210-01_PCMCIA_SMT
Top View
U41B
OZ711MP
CARDBUS/FLASH MEMORY CARD
O2_OZ711MP1
R498 33_0402
CCLK
CAVCC
SOCKET_VCC
+3VSUS
Q19
AO3415-P
EN_MCARD_VCC3#
MCARD_VCC3
C941 1UF
R490 22K
MS_CD#
R491 22K
TP166
SD_CD#
J3
6IN CARDREADER
C942 1UF
C943 1UF
C944 1UF
TPT1
TPT2
CARDBUS_RST-
U43
NC7S08_SC70_5_NC
R501 10K_NC
R499 0_NC
R500 0
XD_CD#
XD_CE#
SD/MS_CLK/XD_CLE
Q20
N-RHU002N06_NC
U42
T3F-0747402-F01
TSSOP_14_NC
C945 0.1UF_0402_NC

	Mount	Un-Mount
For XD-Logo Test	others	R169
Not For XD-Logo Test	R169	others

P.S. For OZ711MP1 Ver. C1, only mount R169

MSI CORPORATION

Title
CARDBUS/FLASH CARD

Size Custom
Document Number **MS-16332**
Rev 0.A

Date: Monday, April 10, 2006
Sheet 26 of 40

MINI PCI SOCKET

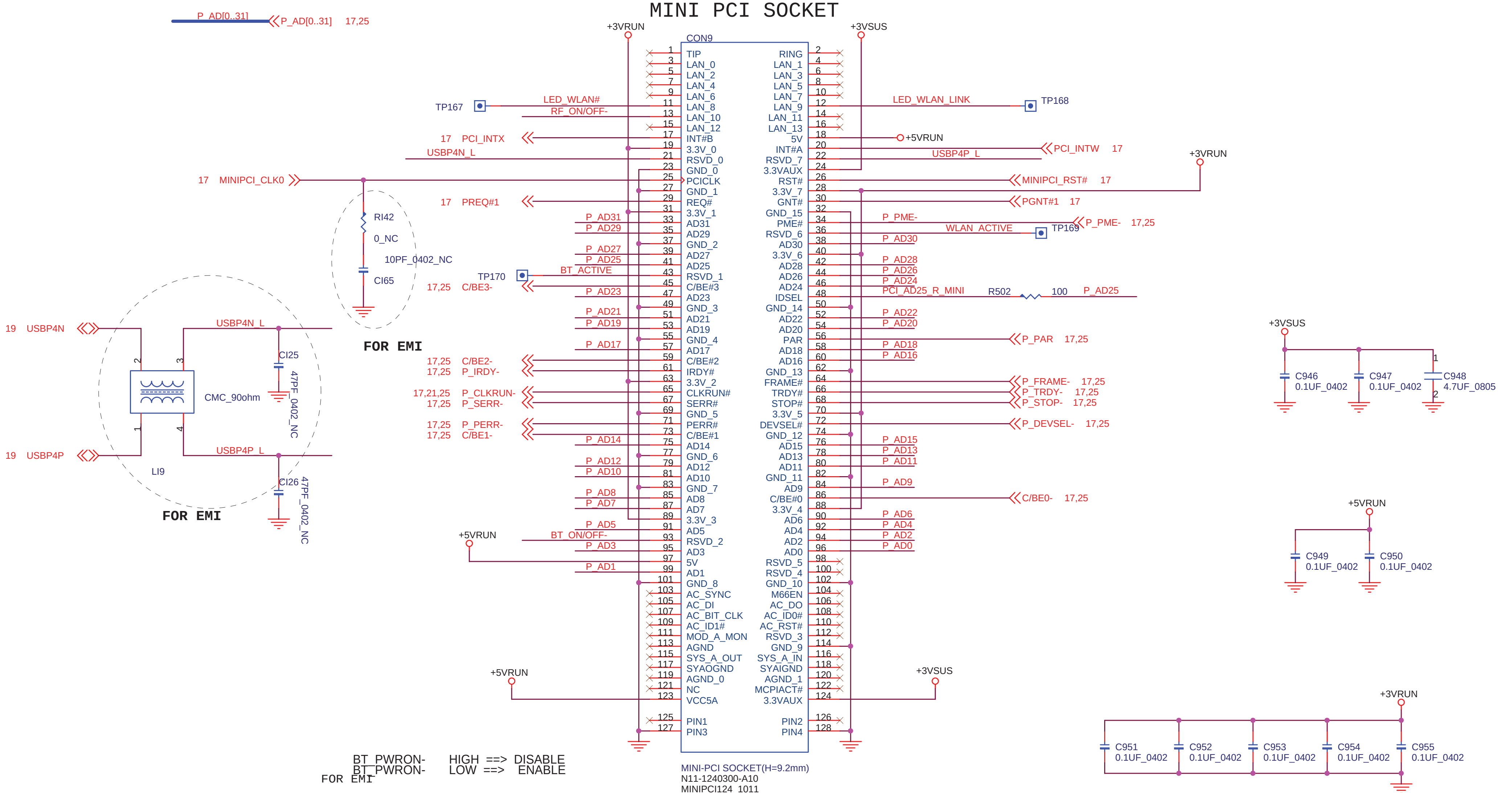
P_AD[0..31]
P_AD[0..31] 17,25
+3VRUN
+3VSUS
CON9
1 TIP
2 RING
3 LAN_0
4 LAN_1
5 LAN_2
6 LAN_3
7 LAN_4
8 LAN_5
9 LAN_6
10 LAN_7
11 LAN_8
12 LAN_9
13 LAN_10
14 LAN_11
15 LAN_12
16 LAN_13
17 INT#B
18 5V
19 3.3V_0
20 INT#A
21 RSVD_0
22 RSVD_7
23 GND_0
24 3.3VAUX
25 PCICLK
26 RST#
27 GND_1
28 3.3V_7
29 REQ#
30 GNT#
31 3.3V_1
32 GND_15
33 AD31
34 PME#
35 AD29
36 RSVD_6
37 GND_2
38 AD30
39 AD27
40 3.3V_6
41 AD25
42 AD28
43 RSVD_1
44 AD26
45 C/BE#3
46 AD24
47 AD23
48 IDSEL
49 GND_3
50 GND_14
51 AD21
52 AD22
53 AD19
54 AD20
55 GND_4
56 PAR
57 AD17
58 AD18
59 C/BE#2
60 AD16
61 IRDY#
62 GND_13
63 3.3V_2
64 FRAME#
65 CLKRUN#
66 TRDY#
67 SERR#
68 STOP#
69 GND_5
70 3.3V_5
71 PERR#
72 DEVSEL#
73 C/BE#1
74 GND_12
75 AD14
76 AD15
77 GND_6
78 AD13
79 AD12
80 AD11
81 AD10
82 GND_11
83 GND_7
84 AD9
85 AD8
86 C/BE#0
87 AD7
88 3.3V_4
89 3.3V_3
90 AD6
91 AD5
92 AD4
93 RSVD_2
94 AD2
95 AD3
96 AD0
97 5V
98 RSVD_5
99 AD1
100 RSVD_4
101 GND_8
102 GND_10
103 AC_SYNC
104 M66EN
105 AC_DI
106 AC_DO
107 AC_BIT_CLK
108 AC_ID0#
109 AC_ID1#
110 AC_RST#
111 MOD_A_MON
112 RSVD_3
113 AGND
114 GND_9
115 SYS_A_OUT
116 SYS_A_IN
117 SYAOGND
118 SYAIGND
119 AGND_0
120 AGND_1
121 NC
122 MCPIACT#
123 VCC5A
124 3.3VAUX
125 PIN1
126 PIN2
127 PIN3
128 PIN4
TP167
LED_WLAN#
RF_ON/OFF-
17 PCI_INTX
USBP4N_L
17 MINIPCI_CLK0
17 PREQ#1
RI42
0_NC
10PF_0402_NC
CI65
FOR EMI
TP170
BT_ACTIVE
17,25 C/BE3-
P_AD31
P_AD29
P_AD27
P_AD25
P_AD23
P_AD21
P_AD19
P_AD17
17,25 C/BE2-
17,25 P_IRDY-
17,21,25 P_CLKRUN-
17,25 P_SERR-
17,25 P_PERR-
17,25 C/BE1-
P_AD14
P_AD12
P_AD10
P_AD8
P_AD7
P_AD5
BT_ON/OFF-
P_AD3
P_AD1
+5VRUN
19 USBP4N
19 USBP4P
USBP4N_L
USBP4P_L
CI25
47PF_0402_NC
CI26
47PF_0402_NC
CMC_90ohm
LI9
FOR EMI
LED_WLAN_LINK
TP168
+5VRUN
PCI_INTW 17
USBP4P_L
MINIPCI_RST# 17
PGNT#1 17
P_PME-
P_PME- 17,25
WLAN_ACTIVE
TP169
P_AD30
P_AD28
P_AD26
P_AD24
PCI_AD25_R_MINI
R502
100
P_AD25
P_AD22
P_AD20
P_PAR 17,25
P_AD18
P_AD16
P_FRAME- 17,25
P_TRDY- 17,25
P_STOP- 17,25
P_DEVSEL- 17,25
P_AD15
P_AD13
P_AD11
P_AD9
C/BE0- 17,25
P_AD6
P_AD4
P_AD2
P_AD0
+3VSUS
+3VRUN
+3VSUS
C946 0.1UF_0402
C947 0.1UF_0402
C948 4.7UF_0805
+5VRUN
C949 0.1UF_0402
C950 0.1UF_0402
+3VRUN
C951 0.1UF_0402
C952 0.1UF_0402
C953 0.1UF_0402
C954 0.1UF_0402
C955 0.1UF_0402
MINI-PCI SOCKET(H=9.2mm)
N11-1240300-A10
MINIPCI124_1011

BT_PWRON- HIGH ==> DISABLE
BT_PWRON- LOW ==> ENABLE
FOR EMI

WLAN_ON/OFF Control

OPEN RF ON (HiZ)
LOW RF OFF

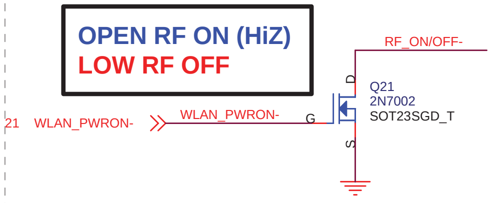
RF_ON/OFF-
D
Q21
2N7002
SOT23SGD_T
21 WLAN_PWRON-
WLAN_PWRON-
G
S

BlueTooth_ON/OFF Control

OPEN RF ON (HiZ)
LOW RF OFF

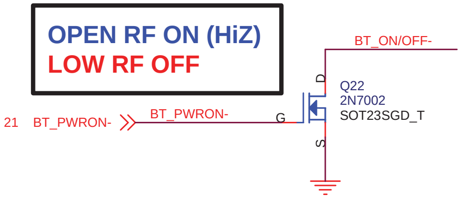
BT_ON/OFF-
D
Q22
2N7002
SOT23SGD_T
21 BT_PWRON-
BT_PWRON-
G
S

MINI PCI POWER SPEC.

TOYAL	:	2W
+5V	:	100mA
3.3VAUX	:	5/200/375mA
VCC5A	:	100mA
+3V		

MSI CORPORATION

Title
MINIPCI
Size B
Document Number **MS-16332**
Rev 0.A
Date: Monday, April 10, 2006
Sheet 27 of 40

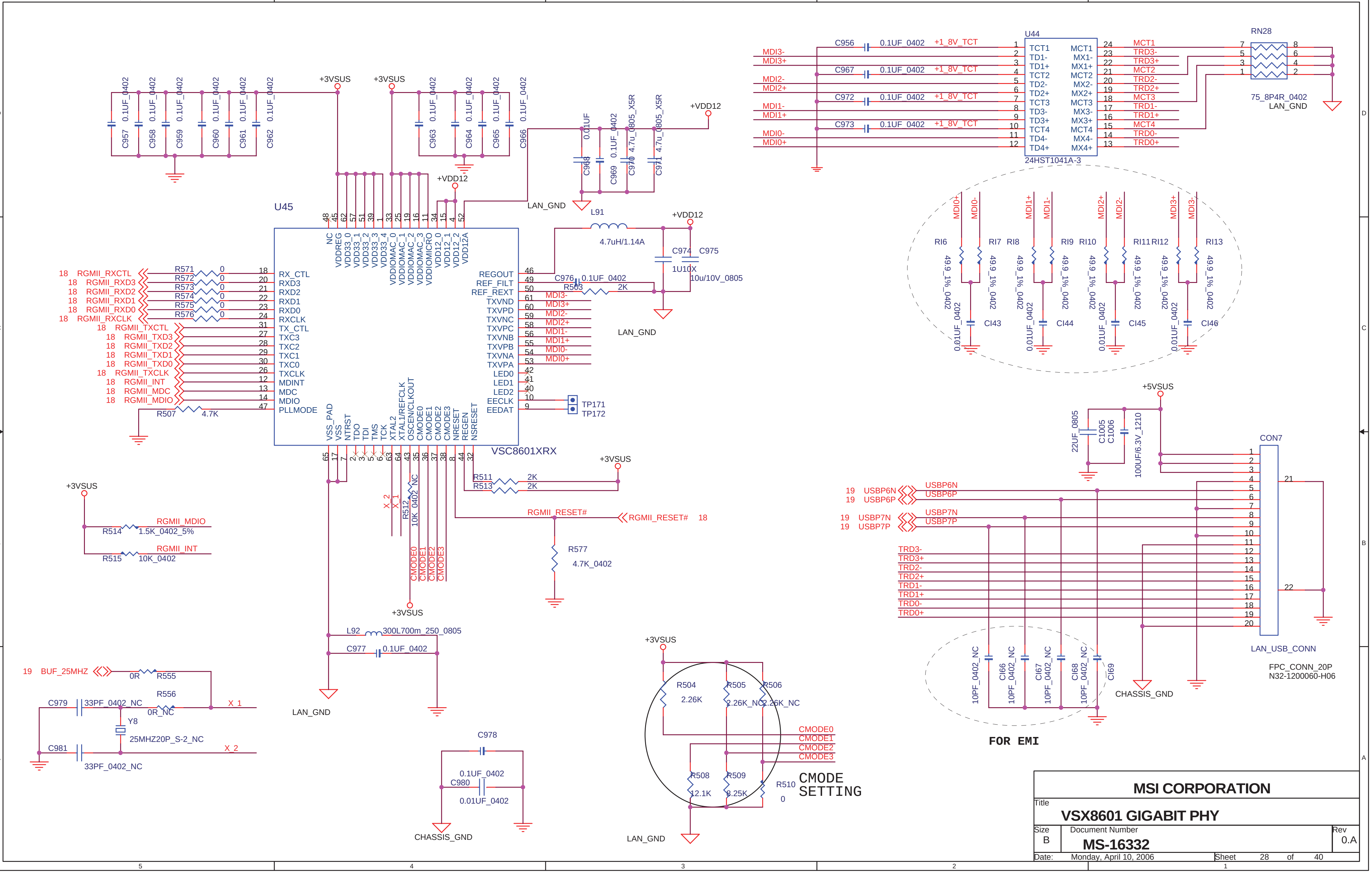
U45
VSC8601XRX
+3VSUS
+VDD12
+5VSUS
LAN_GND
CHASSIS_GND
C957 C958 C959 C960 C961 C962 0.1UF_0402
C963 C964 C965 C966 0.1UF_0402
C968 0.01UF
C969 0.1UF_0402
C970 4.7u_0805_X5R
C971 4.7u_0805_X5R
L91 4.7uH/1.14A
C974 1U10X
C975 10u/10V_0805
C976 0.1UF_0402
R503 2K
18 RGMII_RXCTL
18 RGMII_RXD3
18 RGMII_RXD2
18 RGMII_RXD1
18 RGMII_RXD0
18 RGMII_RXCLK
R571 R572 R573 R574 R575 R576 0
18 RGMII_TXCTL
18 RGMII_TXD3
18 RGMII_TXD2
18 RGMII_TXD1
18 RGMII_TXD0
18 RGMII_TXCLK
18 RGMII_INT
18 RGMII_MDC
18 RGMII_MDIO
R507 4.7K
RX_CTL RXD3 RXD2 RXD1 RXD0 RXCLK TX_CTL TXC3 TXC2 TXC1 TXC0 TXCLK MDINT MDC MDIO PLLMODE
NC VDDREG VDD33_0 VDD33_1 VDD33_2 VDD33_3 VDD33_4 VDDIOMAC_0 VDDIOMAC_1 VDDIOMAC_2 VDDIOMAC_3 VDDIOMICRO VDD12_0 VDD12_1 VDD12_2 VDD12A
REGOUT REF_FILT REF_REXT TXVND TXVPD TXVNC TXVPC TXVNB TXVPB TXVNA TXVPA LED0 LED1 LED2 EECLK EEDAT
VSS_PAD VSS NTRST TDO TDI TMS TCK XTAL2 XTAL1/REFCLK OSCEN/CLKOUT CMODE0 CMODE1 CMODE2 CMODE3 NRESET REGEN NSRESET
MDI3- MDI3+ MDI2- MDI2+ MDI1- MDI1+ MDI0- MDI0+
TP171 TP172
R511 2K
R513 2K
X_2 X_1
R512 10K_0402_NC
RGMII_RESET#
RGMII_RESET# 18
R577 4.7K_0402
R514 1.5K_0402_5% RGMII_MDIO
R515 10K_0402 RGMII_INT
L92 300L700m_250_0805
C977 0.1UF_0402
19 BUF_25MHZ
0R R555
R556 0R_NC
C979 33PF_0402_NC
C981 33PF_0402_NC
Y8 25MHZ20P_S-2_NC
X_1 X_2
C978
C980 0.1UF_0402 0.01UF_0402
R504 2.26K
R505 2.26K_NC
R506 2.26K_NC
R508 12.1K
R509 8.25K
R510 0
CMODE0 CMODE1 CMODE2 CMODE3
CMODE SETTING
U44
24HST1041A-3
C956 C967 C972 C973 0.1UF_0402 +1_8V_TCT
TCT1 TD1- TD1+ TCT2 TD2- TD2+ TCT3 TD3- TD3+ TCT4 TD4- TD4+
MCT1 MX1- MX1+ MCT2 MX2- MX2+ MCT3 MX3- MX3+ MCT4 MX4- MX4+
MCT1 TRD3- TRD3+ MCT2 TRD2- TRD2+ MCT3 TRD1- TRD1+ MCT4 TRD0- TRD0+
RN28 75_8P4R_0402
RI6 RI7 RI8 RI9 RI10 RI11 RI12 RI13 49.9_1%_0402
CI43 CI44 CI45 CI46 0.01UF_0402
C1005 22UF_0805
C1006 100UF/6.3V_1210
CON7
19 USBP6N
19 USBP6P
19 USBP7N
19 USBP7P
LAN_USB_CONN
FPC_CONN_20P
N32-1200060-H06
CI66 CI67 CI68 CI69 10PF_0402_NC
FOR EMI

MSI CORPORATION

Title

VSX8601 GIGABIT PHY

Size B

Document Number MS-16332

Rev 0.A

Date: Monday, April 10, 2006

Sheet 28 of 40

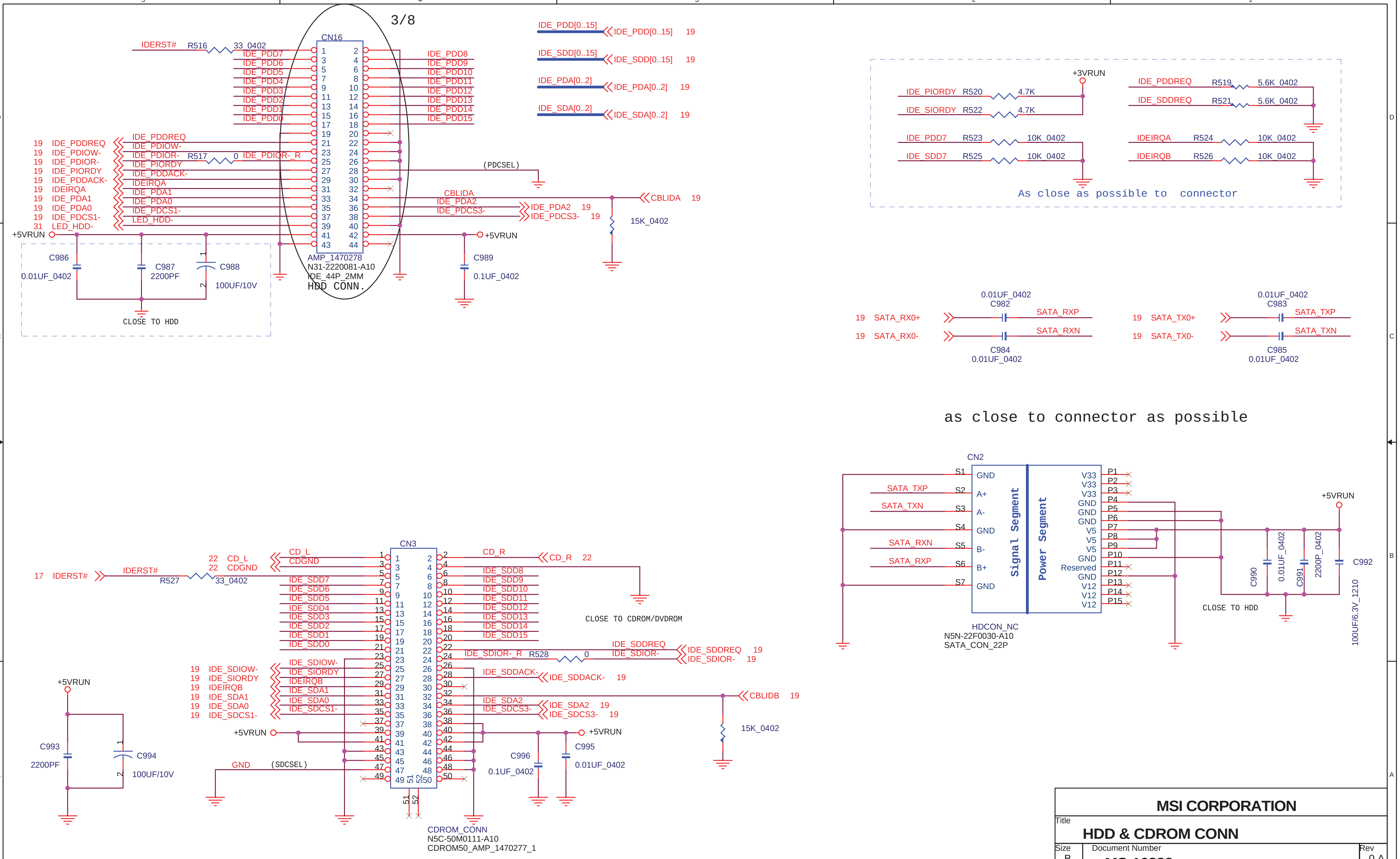
3/8
CN16
IDERST#
R516
33_0402
IDE_PDD7
IDE_PDD6
IDE_PDD5
IDE_PDD4
IDE_PDD3
IDE_PDD2
IDE_PDD1
IDE_PDD0
IDE_PDD8
IDE_PDD9
IDE_PDD10
IDE_PDD11
IDE_PDD12
IDE_PDD13
IDE_PDD14
IDE_PDD15
19 IDE_PDDREQ
19 IDE_PDIOW-
19 IDE_PDIOR-
19 IDE_PIORDY
19 IDE_PDDACK-
19 IDEIRQA
19 IDE_PDA1
19 IDE_PDA0
19 IDE_PDCS1-
31 LED_HDD-
R517
0
IDE_PDIOR-_R
(PDCSEL)
CBLIDA
IDE_PDA2
IDE_PDCS3-
CBLIDA 19
IDE_PDA2 19
IDE_PDCS3- 19
15K_0402
+5VRUN
C986
0.01UF_0402
C987
2200PF
C988
100UF/10V
CLOSE TO HDD
AMP_1470278
N31-2220081-A10
IDE_44P_2MM
HDD CONN.
C989
0.1UF_0402
IDE_PDD[0..15]
IDE_PDD[0..15] 19
IDE_SDD[0..15]
IDE_SDD[0..15] 19
IDE_PDA[0..2]
IDE_PDA[0..2] 19
IDE_SDA[0..2]
IDE_SDA[0..2] 19
+3VRUN
IDE_PIORDY R520 4.7K
IDE_SIORDY R522 4.7K
IDE_PDD7 R523 10K_0402
IDE_SDD7 R525 10K_0402
IDE_PDDREQ R519 5.6K_0402
IDE_SDDREQ R521 5.6K_0402
IDEIRQA R524 10K_0402
IDEIRQB R526 10K_0402
As close as possible to connector
0.01UF_0402
C982
19 SATA_RX0+
19 SATA_RX0-
SATA_RXP
SATA_RXN
C984
0.01UF_0402
0.01UF_0402
C983
19 SATA_TX0+
19 SATA_TX0-
SATA_TXP
SATA_TXN
C985
0.01UF_0402
as close to connector as possible
CN2
SATA_TXP
SATA_TXN
SATA_RXN
SATA_RXP
S1 GND
S2 A+
S3 A-
S4 GND
S5 B-
S6 B+
S7 GND
Signal Segment
Power Segment
V33 P1
V33 P2
V33 P3
GND P4
GND P5
GND P6
V5 P7
V5 P8
V5 P9
GND P10
Reserved P11
GND P12
V12 P13
V12 P14
V12 P15
HDCON_NC
N5N-22F0030-A10
SATA_CON_22P
+5VRUN
C990
0.01UF_0402
C991
2200P_0402
C992
100UF/6.3V_1210
CLOSE TO HDD
CN3
22 CD_L
22 CDGND
CD_L
CDGND
CD_R
CD_R 22
17 IDERST#
IDERST#
R527
33_0402
IDE_SDD7
IDE_SDD6
IDE_SDD5
IDE_SDD4
IDE_SDD3
IDE_SDD2
IDE_SDD1
IDE_SDD0
IDE_SDD8
IDE_SDD9
IDE_SDD10
IDE_SDD11
IDE_SDD12
IDE_SDD13
IDE_SDD14
IDE_SDD15
CLOSE TO CDROM/DVDROM
IDE_SDIOR-_R
R528
0
IDE_SDDREQ
IDE_SDIOR-
IDE_SDDREQ 19
IDE_SDIOR- 19
19 IDE_SDIOW-
19 IDE_SIORDY
19 IDEIRQB
19 IDE_SDA1
19 IDE_SDA0
19 IDE_SDCS1-
IDE_SDIOW-
IDE_SIORDY
IDEIRQB
IDE_SDA1
IDE_SDA0
IDE_SDCS1-
IDE_SDDACK-
IDE_SDDACK- 19
CBLIDB 19
IDE_SDA2
IDE_SDCS3-
IDE_SDA2 19
IDE_SDCS3- 19
15K_0402
+5VRUN
C996
0.1UF_0402
C995
0.01UF_0402
+5VRUN
C993
2200PF
C994
100UF/10V
GND
(SDCSEL)
CDROM_CONN
N5C-50M0111-A10
CDROM50_AMP_1470277_1

MSI CORPORATION

Title
HDD & CDROM CONN

Size: B
Document Number: **MS-16332**
Rev: 0.A

Date: Monday, April 10, 2006
Sheet 29 of 40

MDC Connector Ver 1.5

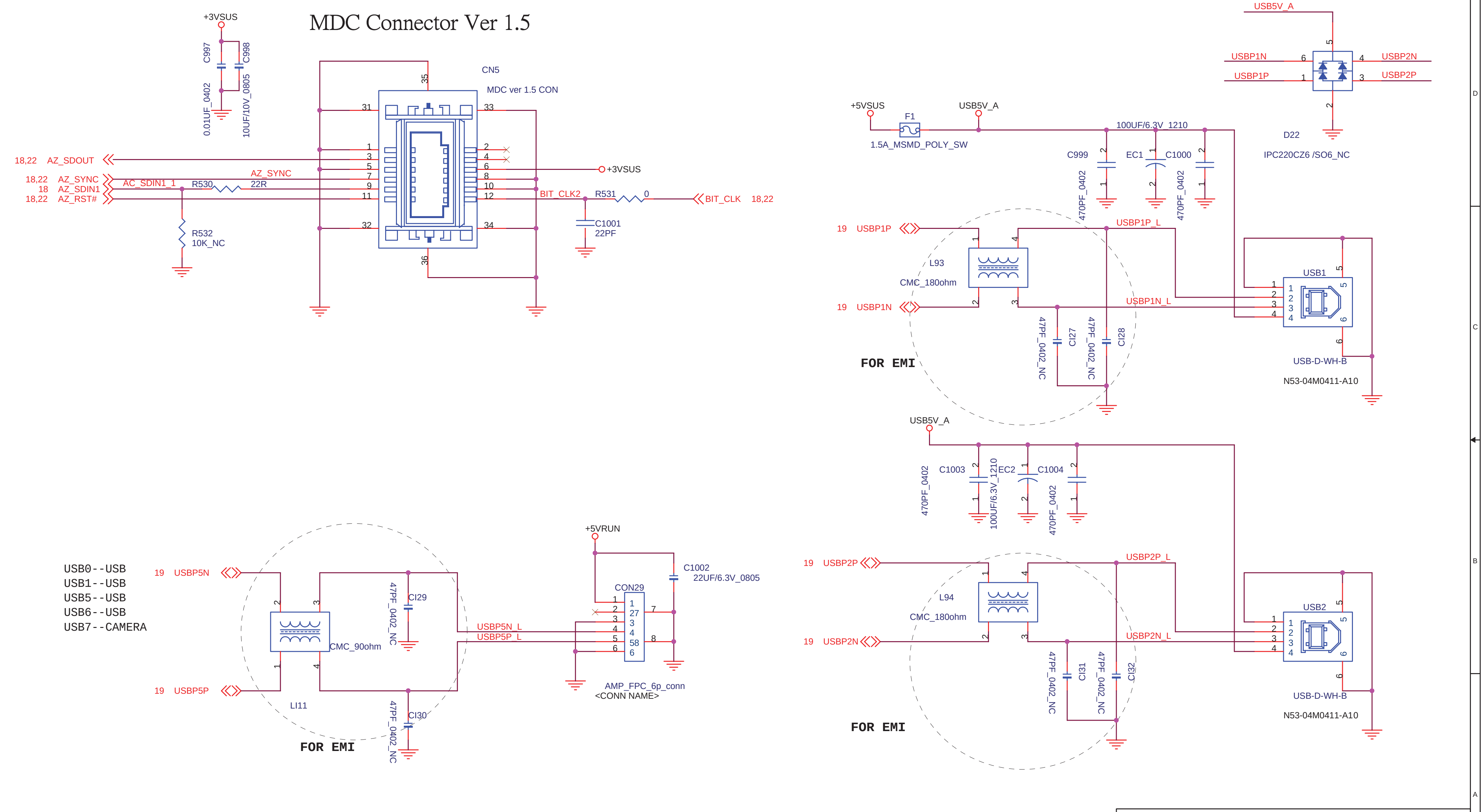
+3VSUS
C997
C998
0.01UF_0402
10UF/10V_0805
CN5
MDC ver 1.5 CON
35
31
33
1
2
3
4
5
6
7
8
9
10
11
12
32
34
36
18,22 AZ_SDOUT
18,22 AZ_SYNC
18 AZ_SDIN1
18,22 AZ_RST#
AC_SDIN1_1
R530
22R
AZ_SYNC
R532
10K_NC
+3VSUS
BIT_CLK2
R531
0
BIT_CLK 18,22
C1001
22PF
USB5V_A
USBP1N
USBP1P
USBP2N
USBP2P
6
1
4
3
5
2
D22
IPC220CZ6 /SO6_NC
+5VSUS
F1
1.5A_MSMD_POLY_SW
USB5V_A
100UF/6.3V_1210
C999
EC1
C1000
470PF_0402
470PF_0402
19 USBP1P
USBP1P_L
L93
CMC_180ohm
19 USBP1N
USBP1N_L
47PF_0402_NC
CI27
47PF_0402_NC
CI28
FOR EMI
USB1
USB-D-WH-B
N53-04M0411-A10
USB5V_A
C1003
EC2
C1004
470PF_0402
100UF/6.3V_1210
470PF_0402
19 USBP2P
USBP2P_L
L94
CMC_180ohm
19 USBP2N
USBP2N_L
47PF_0402_NC
CI31
47PF_0402_NC
CI32
FOR EMI
USB2
USB-D-WH-B
N53-04M0411-A10
19 USBP5N
19 USBP5P
LI11
CMC_90ohm
47PF_0402_NC
CI29
47PF_0402_NC
CI30
FOR EMI
USBP5N_L
USBP5P_L
+5VRUN
C1002
22UF/6.3V_0805
CON29
1
2
3
4
5
6
7
27
58
8
AMP_FPC_6p_conn
<CONN NAME>

USB0--USB
USB1--USB
USB5--USB
USB6--USB
USB7--CAMERA

MSI CORPORATION

Title
MDC & USB

Size B
Document Number **MS-16332**
Rev 0.A

Date: Monday, April 10, 2006
Sheet 30 of 40

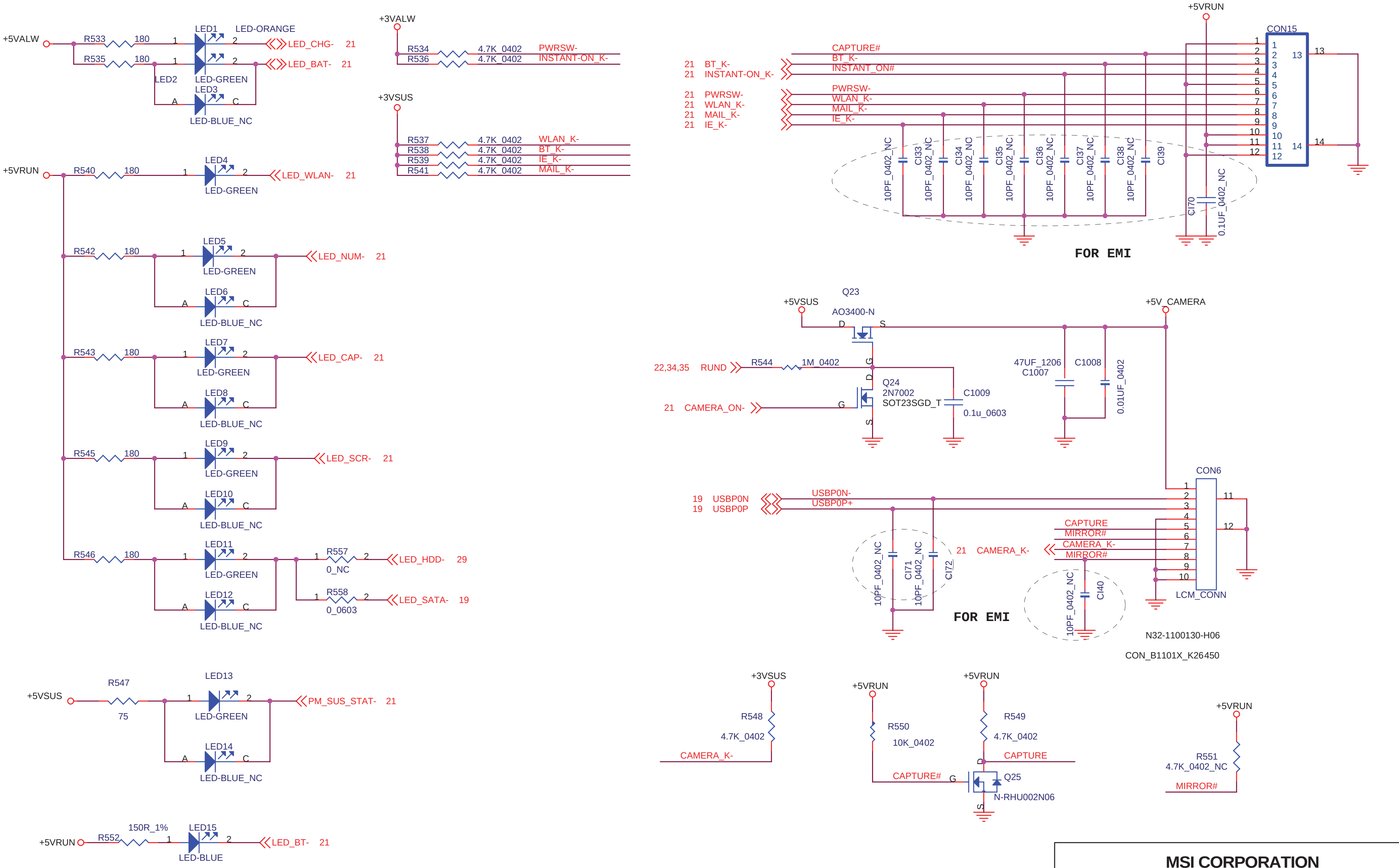
+5VALW
R533 180
R535 180
LED1 LED-ORANGE
LED_CHG- 21
LED_BAT- 21
LED2 LED-GREEN
LED3
A C
LED-BLUE_NC
+3VALW
R534 4.7K_0402 PWRSW-
R536 4.7K_0402 INSTANT-ON_K-
+3VSUS
R537 4.7K_0402 WLAN_K-
R538 4.7K_0402 BT_K-
R539 4.7K_0402 IE_K-
R541 4.7K_0402 MAIL_K-
+5VRUN
R540 180
LED4 LED-GREEN
LED_WLAN- 21
R542 180
LED5 LED-GREEN
LED_NUM- 21
LED6 LED-BLUE_NC
R543 180
LED7 LED-GREEN
LED_CAP- 21
LED8 LED-BLUE_NC
R545 180
LED9 LED-GREEN
LED_SCR- 21
LED10 LED-BLUE_NC
R546 180
LED11 LED-GREEN
R557 0_NC
LED_HDD- 29
LED12 LED-BLUE_NC
R558 0_0603
LED_SATA- 19
+5VSUS
R547 75
LED13 LED-GREEN
PM_SUS_STAT- 21
LED14 LED-BLUE_NC
+5VRUN
R552 150R_1%
LED15 LED-BLUE
LED_BT- 21
+5VRUN
CON15
CAPTURE#
BT_K-
INSTANT_ON#
PWRSW-
WLAN_K-
MAIL_K-
IE_K-
21 BT_K-
21 INSTANT-ON_K-
21 PWRSW-
21 WLAN_K-
21 MAIL_K-
21 IE_K-
10PF_0402_NC
CI33 10PF_0402_NC
CI34 10PF_0402_NC
CI35 10PF_0402_NC
CI36 10PF_0402_NC
CI37 10PF_0402_NC
CI38 10PF_0402_NC
CI39
CI70 0.1UF_0402_NC
13 14
FOR EMI
Q23 AO3400-N
+5VSUS
D S
+5V_CAMERA
22,34,35 RUND
R544 1M_0402
Q24 2N7002 SOT23SGD_T
21 CAMERA_ON-
C1009 0.1u_0603
47UF_1206 C1007
C1008 0.01UF_0402
CON6
19 USBP0N
19 USBP0P
USBP0N-
USBP0P+
CAPTURE
MIRROR#
CAMERA_K-
MIRROR#
21 CAMERA_K-
10PF_0402_NC
CI71 10PF_0402_NC
CI72
10PF_0402_NC CI40
FOR EMI
11 12
LCM_CONN
N32-1100130-H06
CON_B1101X_K26450
+3VSUS
R548 4.7K_0402
CAMERA_K-
+5VRUN
R550 10K_0402
CAPTURE#
+5VRUN
R549 4.7K_0402
CAPTURE
Q25 N-RHU002N06
+5VRUN
R551 4.7K_0402_NC
MIRROR#

MSI CORPORATION

Title
LED & CONN

Size B
Document Number **MS-16332**
Rev 0.A
Date: Monday, April 10, 2006
Sheet 31 of 40

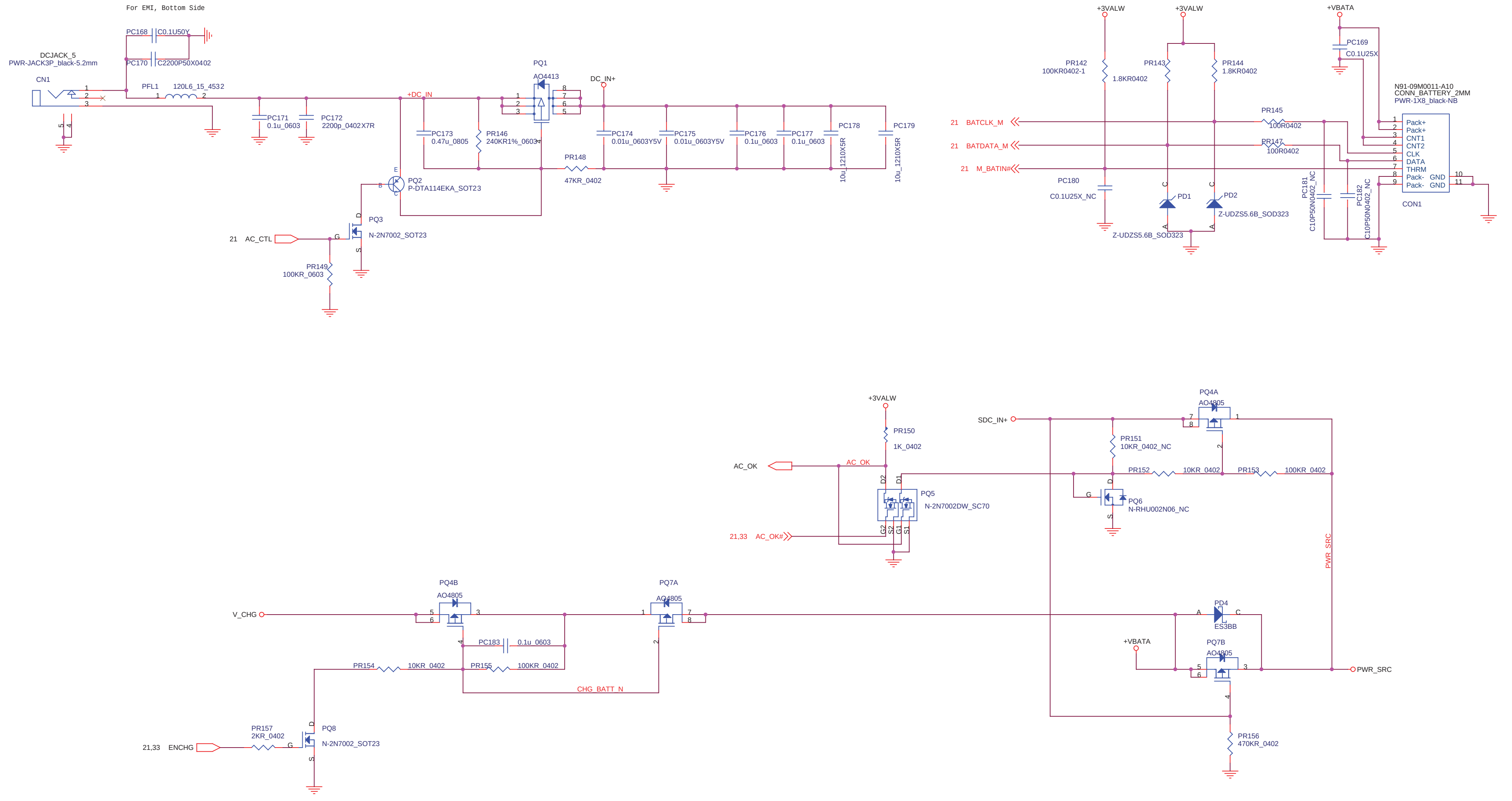
For EMI, Bottom Side
PC168
C0.1U50Y
PC170
C2200P50X0402
DCJACK_5
PWR-JACK3P_black-5.2mm
CN1
PFL1
120L6_15_4532
+DC_IN
PC171
0.1u_0603
PC172
2200p_0402X7R
PC173
0.47u_0805
PR146
240KR1%_0603
PQ1
AO4413
DC_IN+
PR148
47KR_0402
PC174
0.01u_0603Y5V
PC175
0.01u_0603Y5V
PC176
0.1u_0603
PC177
0.1u_0603
PC178
10u_1210X5R
PC179
10u_1210X5R
PQ2
P-DTA114EKA_SOT23
PQ3
N-2N7002_SOT23
21 AC_CTL
PR149
100KR_0603
+3VALW
+3VALW
+VBATA
PR142
100KR0402-1
1.8KR0402
PR143
PR144
1.8KR0402
PC169
C0.1U25X
N91-09M0011-A10
CONN_BATTERY_2MM
PWR-1X8_black-NB
PR145
100R0402
21 BATCLK_M
21 BATDATA_M
PR147
100R0402
21 M_BATIN#
PC180
C0.1U25X_NC
PD1
Z-UDZS5.6B_SOD323
PD2
Z-UDZS5.6B_SOD323
PC181
C10P50N0402_NC
PC182
C10P50N0402_NC
Pack+
Pack+
CNT1
CNT2
CLK
DATA
THRM
Pack- GND
Pack- GND
CON1
+3VALW
PR150
1K_0402
AC_OK
AC_OK
PQ5
N-2N7002DW_SC70
21,33 AC_OK#
SDC_IN+
PQ4A
AO4805
PR151
10KR_0402_NC
PR152
10KR_0402
PR153
100KR_0402
PQ6
N-RHU002N06_NC
PWR_SRC
V_CHG
PQ4B
AO4805
PQ7A
AO4805
PC183
0.1u_0603
PR154
10KR_0402
PR155
100KR_0402
CHG_BATT_N
PD4
ES3BB
+VBATA
PQ7B
AO4805
PWR_SRC
PR156
470KR_0402
PR157
2KR_0402
21,33 ENCHG
PQ8
N-2N7002_SOT23

MSI CORPORATION

Title
Battery select

Size	Document Number	Rev
C	MS-16332	0A

Date: Monday, April 10, 2006 Sheet 32 of 40

Adapter= 90 W

Adapter input voltage set 18.05 Voltage

Ichange=(Vref/RS2)(Victl/Vrefin)(1/20)
Vref=4.096V
Vrefin=4.096(100K/(100K+24.3K))=3.295V
3S3P :
Victl=4.096(267K/(34K+267K))=3.6333V
Ichange=4.5A
3S2P :
Victl=4.096(49.9K/(34K+49.9K))=2.4361V
Ichange=3A
Pre-charge :
Victl=4.096(1.54K/(34K+1.54K))=0.177486V
Ichange=220mA

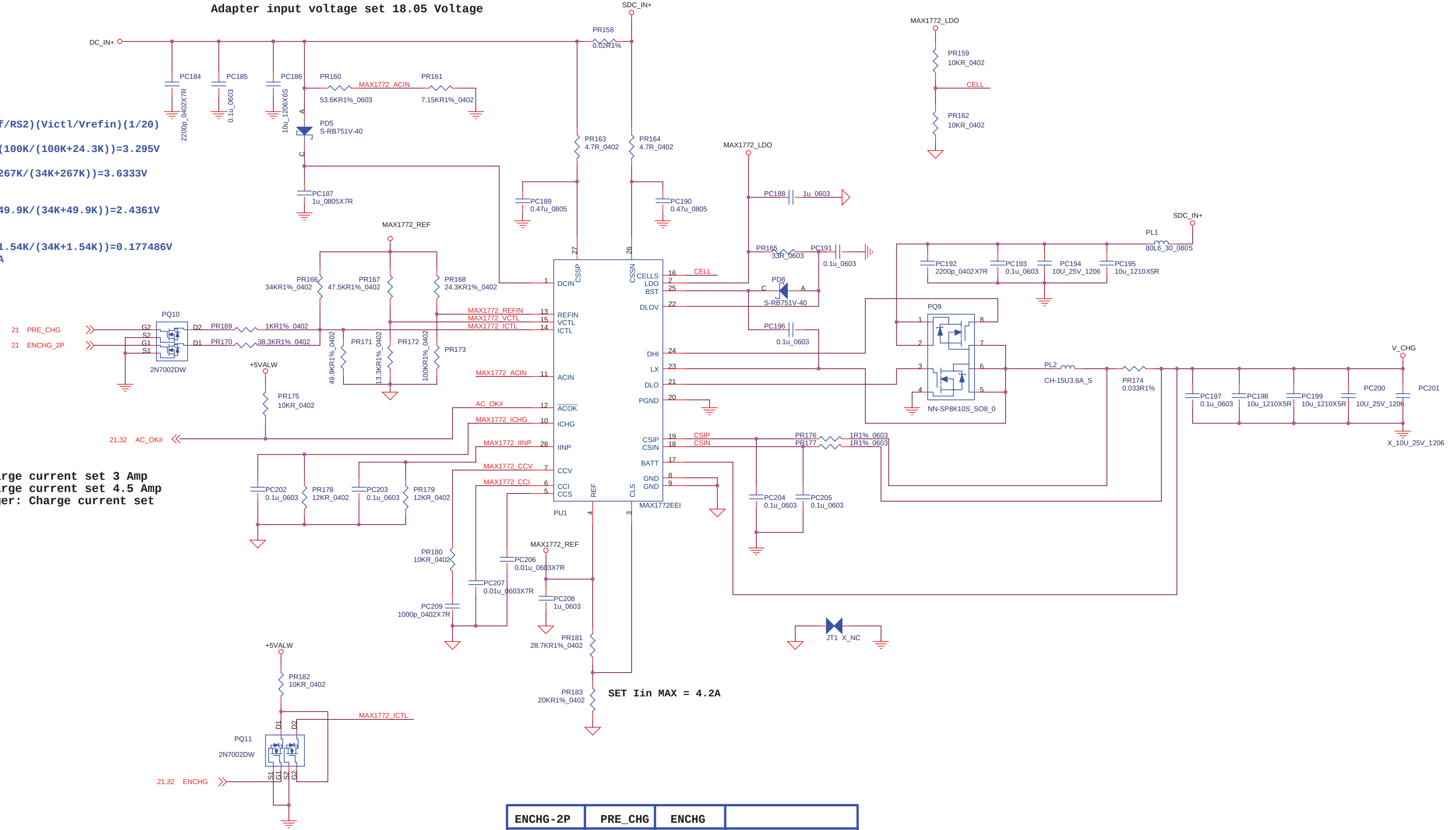
DC_IN+
SDC_IN+
PR158 0.02R1%
PC184 2200p_0402X7R
PC185 0.1u_0603
PC186 10u_1206X6S
PR160 53.6KR1%_0603
MAX1772_ACIN
PR161 7.15KR1%_0402
PD5 S-RB751V-40
PC187 1u_0805X7R
PR163 4.7R_0402
PR164 4.7R_0402
PC189 0.47u_0805
PC190 0.47u_0805
MAX1772_LDO
PR159 10KR_0402
CELL
PR162 10KR_0402
PC188 1u_0603
PR165 33R_0603
PC191 0.1u_0603
PD6 S-RB751V-40
PC196 0.1u_0603
MAX1772_REF
PR166 34KR1%_0402
PR167 47.5KR1%_0402
PR168 24.3KR1%_0402
PR171 49.9KR1%_0402
PR172 13.3KR1%_0402
PR173 100KR1%_0402
PQ10 2N7002DW
PRE_CHG
ENCHG_2P
PR169 1KR1%_0402
PR170 38.3KR1%_0402
MAX1772_REFIN
MAX1772_VCTL
MAX1772_ICTL
+5VALW
PR175 10KR_0402
AC_OK#
MAX1772_ICHG
MAX1772_IINP
MAX1772_CCV
MAX1772_CCI
PC202 0.1u_0603
PR178 12KR_0402
PC203 0.1u_0603
PR179 12KR_0402
PR180 10KR_0402
PC209 1000p_0402X7R
PC207 0.01u_0603X7R
PC206 0.01u_0603X7R
PC208 1u_0603
PR181 28.7KR1%_0402
PR183 20KR1%_0402
PU1 MAX1772EEI
DCIN CSSP CSSN CELLS LDO BST DLOV REFIN VCTL ICTL ACIN DHI LX DLO PGND ACOK ICHG IINP CCV CCI CCS REF CLS CSIP CSIN BATT GND
PL1 80L6_30_0805
PC192 2200p_0402X7R
PC193 0.1u_0603
PC194 10U_25V_1206
PC195 10u_1210X5R
PQ9 NN-SP8K10S_SO8_0
PL2 CH-15U3.6A_S
PR174 0.033R1%
V_CHG
PC197 0.1u_0603
PC198 10u_1210X5R
PC199 10u_1210X5R
PC200 10U_25V_1206
PC201 X_10U_25V_1206
PR176 1R1%_0603
PR177 1R1%_0603
CSIP
CSIN
PC204 0.1u_0603
PC205 0.1u_0603
JT1 X_NC
PR182 10KR_0402
PQ11 2N7002DW
ENCHG

SET Iin MAX = 4.2A

3S2P: Charge current set 3 Amp
3S3P: Charge current set 4.5 Amp
Pre-charger: Charge current set 200mA

ENCHG-2P	PRE_CHG	ENCHG	
0	1	1	Pre-charge
1	0	1	3S2P-Fast charge
0	0	1	3S3P-Fast charge
0	0	0	STOP CHARGE

MSI CORPORATION
Title
Battery Charger
Size C
Document Number MS-16332
Rev 0A
Date: Monday, April 10, 2006
Sheet 33 of 40

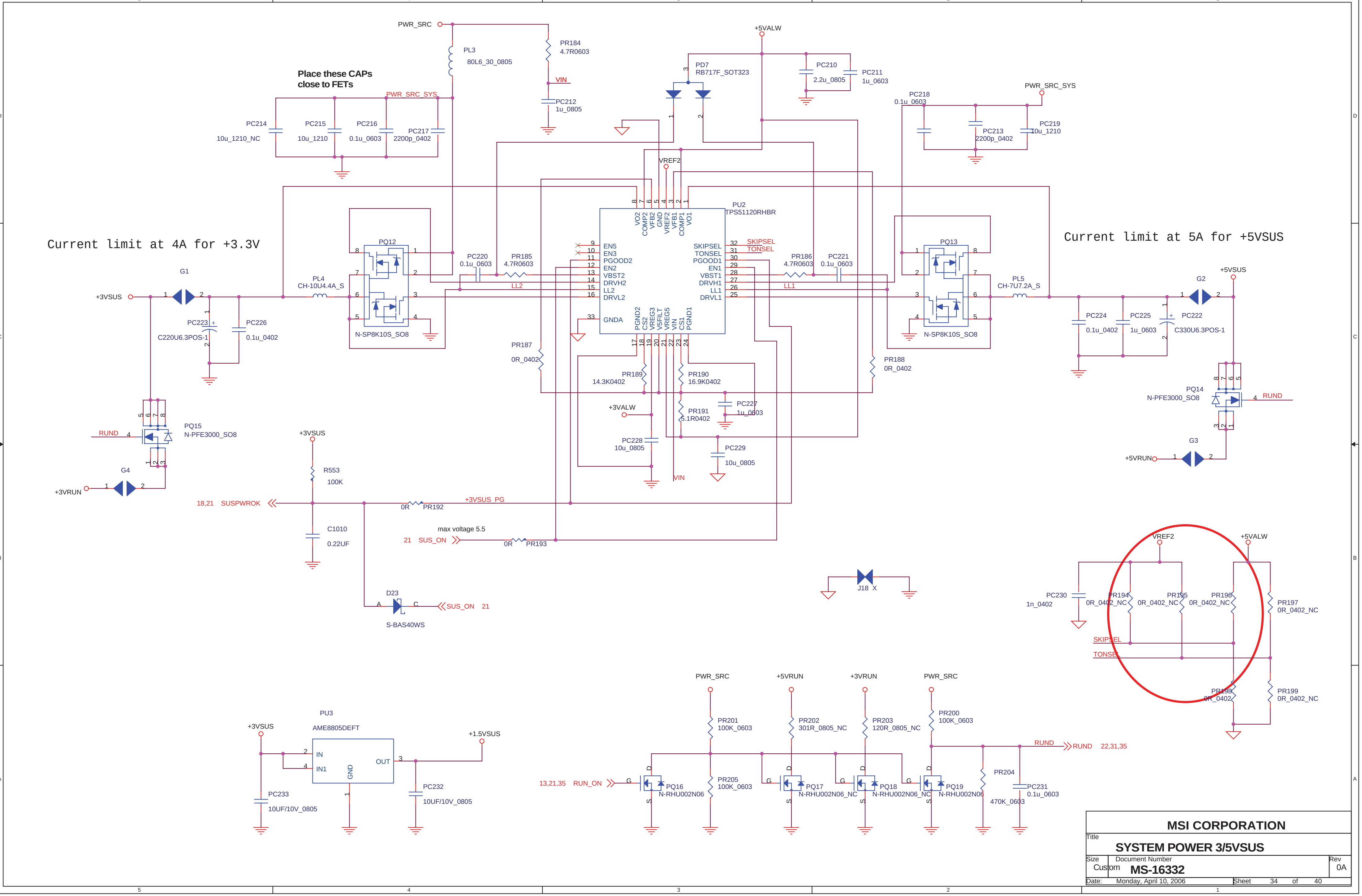
Place these CAPs
close to FETs
Current limit at 4A for +3.3V
Current limit at 5A for +5VSUS
PWR_SRC
PL3
80L6_30_0805
PR184
4.7R0603
VIN
PC212
1u_0805
PWR_SRC_SYS
PC214
10u_1210_NC
PC215
10u_1210
PC216
0.1u_0603
PC217
2200p_0402
+5VALW
PD7
RB717F_SOT323
PC210
2.2u_0805
PC211
1u_0603
PWR_SRC_SYS
PC218
0.1u_0603
PC213
2200p_0402
PC219
10u_1210
VREF2
PU2
TPS51120RHBR
VO2
COMP2
VFB2
GND
VREF2
VFB1
COMP1
VO1
EN5
EN3
PGOOD2
EN2
VBST2
DRVH2
LL2
DRVL2
GNDA
SKIPSEL
TONSEL
PGOOD1
EN1
VBST1
DRVH1
LL1
DRVL1
PGND2
CS2
VREG3
V5FILT
VREG5
VIN
CS1
PGND1
SKIPSEL
TONSEL
PQ12
N-SP8K10S_SO8
PQ13
N-SP8K10S_SO8
PC220
0.1u_0603
PR185
4.7R0603
LL2
PR186
4.7R0603
PC221
0.1u_0603
LL1
PL4
CH-10U4.4A_S
PL5
CH-7U7.2A_S
G1
+3VSUS
PC223
C220U6.3POS-1
PC226
0.1u_0402
G2
+5VSUS
PC224
0.1u_0402
PC225
1u_0603
PC222
C330U6.3POS-1
PR187
0R_0402
PR188
0R_0402
PR189
14.3K0402
PR190
16.9K0402
PC227
1u_0603
+3VALW
PR191
5.1R0402
PC228
10u_0805
PC229
10u_0805
VIN
PQ15
N-PFE3000_SO8
RUND
G4
+3VRUN
PQ14
N-PFE3000_SO8
RUND
G3
+5VRUN
+3VSUS
R553
100K
18,21 SUSPWROK
0R PR192
+3VSUS_PG
C1010
0.22UF
max voltage 5.5
21 SUS_ON
0R PR193
D23
S-BAS40WS
A
C
SUS_ON 21
J18 X
VREF2
+5VALW
PC230
1n_0402
PR194
0R_0402_NC
PR195
0R_0402_NC
PR196
0R_0402_NC
PR197
0R_0402_NC
SKIPSEL
TONSEL
PR198
0R_0402
PR199
0R_0402_NC
PU3
AME8805DEFT
+3VSUS
IN
IN1
OUT
GND
+1.5VSUS
PC233
10UF/10V_0805
PC232
10UF/10V_0805
PWR_SRC
+5VRUN
+3VRUN
PWR_SRC
PR201
100K_0603
PR202
301R_0805_NC
PR203
120R_0805_NC
PR200
100K_0603
RUND
RUND 22,31,35
PR205
100K_0603
13,21,35 RUN_ON
PQ16
N-RHU002N06
PQ17
N-RHU002N06_NC
PQ18
N-RHU002N06_NC
PQ19
N-RHU002N06
PR204
470K_0603
PC231
0.1u_0603

MSI CORPORATION

Title
SYSTEM POWER 3/5VSUS

Size: Custom
Document Number: **MS-16332**
Rev: 0A

Date: Monday, April 10, 2006
Sheet 34 of 40

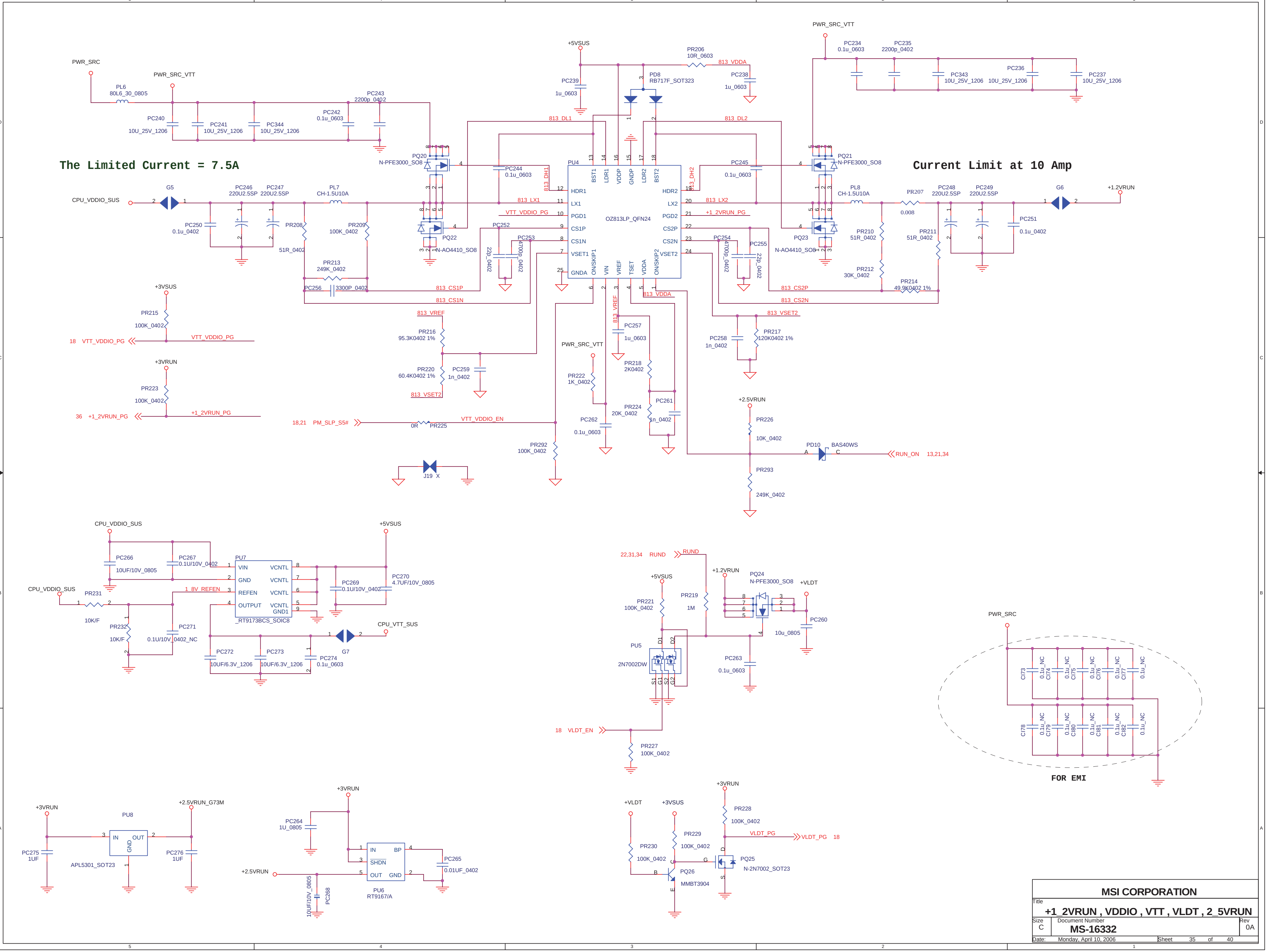

The Limited Current = 7.5A
Current Limit at 10 Amp
FOR EMI
PWR_SRC
PWR_SRC_VTT
PL6
80L6_30_0805
PC240
10U_25V_1206
PC241
10U_25V_1206
PC344
10U_25V_1206
PC242
0.1u_0603
PC243
2200p_0402
PQ20
N-PFE3000_SO8
PQ22
N-AO4410_SO8
+5VSUS
PC239
1u_0603
PR206
10R_0603
813_VDDA
PC238
1u_0603
PD8
RB717F_SOT323
813_DL1
813_DL2
PC244
0.1u_0603
PC245
0.1u_0603
PU4
OZ813LP_QFN24
BST1
LDR1
VDDP
GNDP
LDR2
BST2
HDR1
LX1
PGD1
CS1P
CS1N
VSET1
GNDA
ON/SKIP1
VIN
VREF
TSET
VDDA
ON/SKIP2
HDR2
LX2
PGD2
CS2P
CS2N
VSET2
813_DH1
813_DH2
813_LX1
813_LX2
VTT_VDDIO_PG
+1_2VRUN_PG
PC234
0.1u_0603
PC235
2200p_0402
PC343
10U_25V_1206
PC236
10U_25V_1206
PC237
10U_25V_1206
PQ21
N-PFE3000_SO8
PQ23
N-AO4410_SO8
CPU_VDDIO_SUS
G5
PC246
220U2.5SP
PC247
220U2.5SP
PL7
CH-1.5U10A
PC250
0.1u_0402
PR208
51R_0402
PR209
100K_0402
PR213
249K_0402
PC256
3300P_0402
813_CS1P
813_CS1N
PC252
22p_0402
PC253
4700p_0402
PC254
4700p_0402
PC255
22p_0402
PL8
CH-1.5U10A
PR207
0.008
PC248
220U2.5SP
PC249
220U2.5SP
G6
+1.2VRUN
PC251
0.1u_0402
PR210
51R_0402
PR211
51R_0402
PR212
30K_0402
PR214
49.9K0402 1%
813_CS2P
813_CS2N
813_VSET2
+3VSUS
PR215
100K_0402
18 VTT_VDDIO_PG
VTT_VDDIO_PG
813_VREF
PR216
95.3K0402 1%
PR220
60.4K0402 1%
PC259
1n_0402
813_VSET2
+3VRUN
PR223
100K_0402
36 +1_2VRUN_PG
+1_2VRUN_PG
18,21 PM_SLP_S5#
0R
PR225
VTT_VDDIO_EN
PR292
100K_0402
J19 X
813_VREF
PC257
1u_0603
PWR_SRC_VTT
PR222
1K_0402
PR218
2K0402
PC262
0.1u_0603
PR224
20K_0402
PC261
1n_0402
813_VDDA
PC258
1n_0402
PR217
120K0402 1%
+2.5VRUN
PR226
10K_0402
PD10
BAS40WS
A
C
RUN_ON 13,21,34
PR293
249K_0402
CPU_VDDIO_SUS
+5VSUS
PC266
10UF/10V_0805
PC267
0.1U/10V_0402
PU7
VIN
GND
REFEN
OUTPUT
VCNTL
VCNTL
VCNTL
VCNTL
GND1
_RT9173BCS_SOIC8
PC269
0.1U/10V_0402
PC270
4.7UF/10V_0805
CPU_VDDIO_SUS
PR231
10K/F
1_8V_REFEN
PR232
10K/F
PC271
0.1U/10V_0402_NC
PC272
10UF/6.3V_1206
PC273
10UF/6.3V_1206
PC274
0.1u_0603
G7
CPU_VTT_SUS
22,31,34 RUND
RUND
+5VSUS
+1.2VRUN
PQ24
N-PFE3000_SO8
+VLDT
PR221
100K_0402
PR219
1M
PC260
10u_0805
PU5
2N7002DW
D1
D2
S1
G1
S2
G2
PC263
0.1u_0603
18 VLDT_EN
PR227
100K_0402
PWR_SRC
CI73
0.1u_NC
CI74
0.1u_NC
CI75
0.1u_NC
CI76
0.1u_NC
CI77
0.1u_NC
CI78
0.1u_NC
CI79
0.1u_NC
CI80
0.1u_NC
CI81
0.1u_NC
CI82
0.1u_NC
+3VRUN
PU8
IN
OUT
GND
+2.5VRUN_G73M
PC275
1UF
APL5301_SOT23
PC276
1UF
+3VRUN
PC264
1U_0805
IN
BP
SHDN
OUT
GND
PC265
0.01UF_0402
+2.5VRUN
10UF/10V_0805
PC268
PU6
RT9167/A
+VLDT
+3VSUS
+3VRUN
PR228
100K_0402
VLDT_PG
VLDT_PG 18
PR229
100K_0402
PR230
100K_0402
PQ26
MMBT3904
B
C
E
G
D
S
PQ25
N-2N7002_SOT23

MSI CORPORATION

Title
+1_2VRUN , VDDIO , VTT , VLDT , 2_5VRUN

Size C
Document Number MS-16332
Rev 0A

Date: Monday, April 10, 2006
Sheet 35 of 40

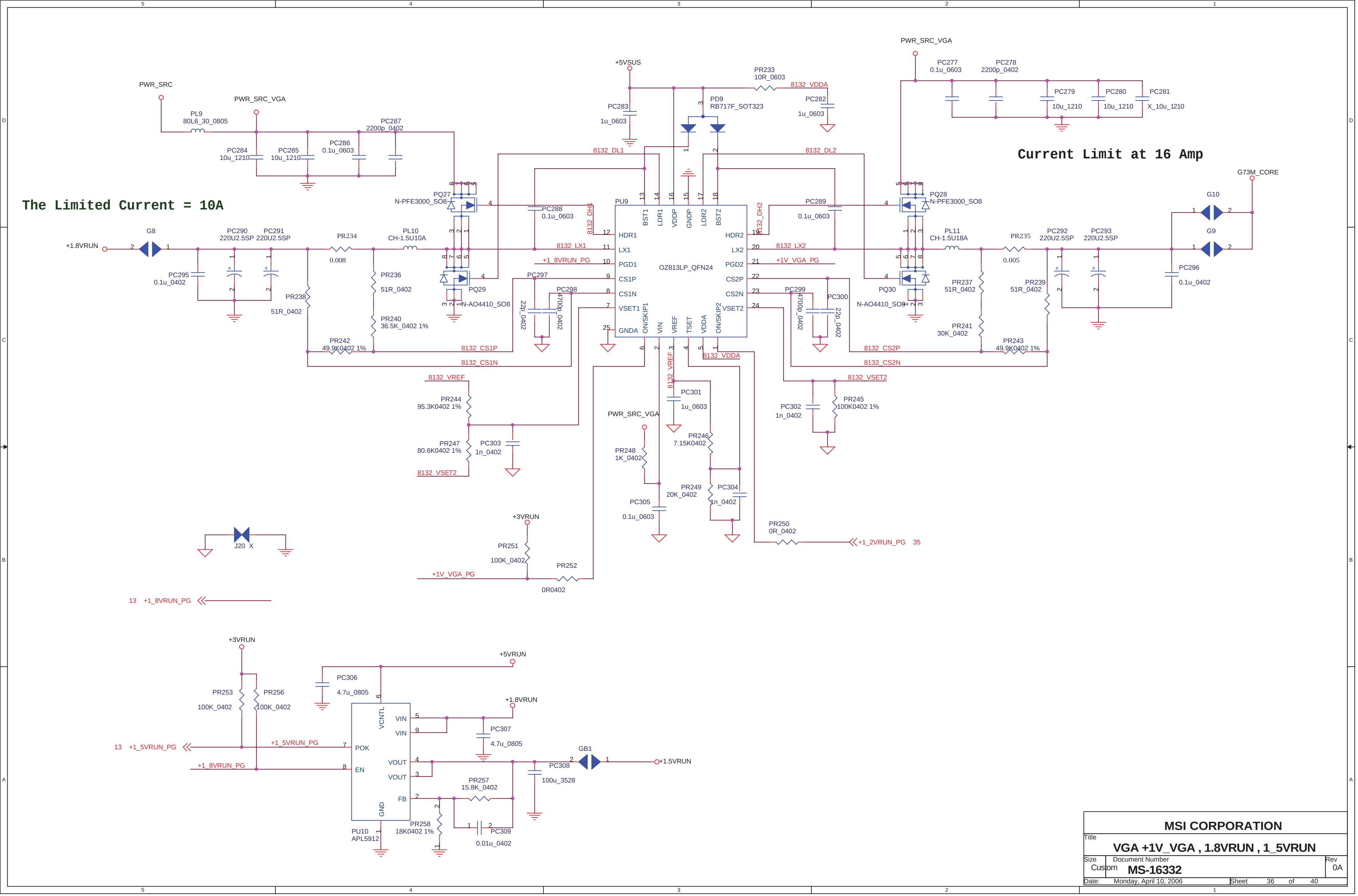
The Limited Current = 10A
Current Limit at 16 Amp
PWR_SRC
PWR_SRC_VGA
PL9
80L6_30_0805
PC287
2200p_0402
PC284
10u_1210
PC285
10u_1210
PC286
0.1u_0603
PQ27
N-PFE3000_SO8
PQ29
N-AO4410_SO8
PL10
CH-1.5U10A
+1.8VRUN
G8
PC290
220U2.5SP
PC291
220U2.5SP
PC295
0.1u_0402
PR234
0.008
PR238
51R_0402
PR236
51R_0402
PR240
36.5K_0402 1%
PR242
49.9K0402 1%
8132_CS1P
8132_CS1N
+5VSUS
PC283
1u_0603
PR233
10R_0603
8132_VDDA
PD9
RB717F_SOT323
PC282
1u_0603
8132_DL1
8132_DL2
PC288
0.1u_0603
8132_DH1
8132_DH2
PU9
OZ813LP_QFN24
HDR1
LX1
PGD1
CS1P
CS1N
VSET1
GNDA
ON/SKIP1
VIN
VREF
TSET
VDDA
ON/SKIP2
BST1
LDR1
VDDP
GNDP
LDR2
BST2
HDR2
LX2
PGD2
CS2P
CS2N
VSET2
8132_LX1
8132_LX2
+1_8VRUN_PG
+1V_VGA_PG
PC297
22p_0402
PC298
4700p_0402
PC299
4700p_0402
PC300
22p_0402
PC289
0.1u_0603
PQ28
N-PFE3000_SO8
PQ30
N-AO4410_SO8
PL11
CH-1.5U18A
PR235
0.005
PR237
51R_0402
PR239
51R_0402
PR241
30K_0402
PR243
49.9K0402 1%
8132_CS2P
8132_CS2N
PC277
0.1u_0603
PC278
2200p_0402
PC279
10u_1210
PC280
10u_1210
PC281
X_10u_1210
PC292
220U2.5SP
PC293
220U2.5SP
PC296
0.1u_0402
G10
G9
G73M_CORE
8132_VREF
PR244
95.3K0402 1%
PR247
80.6K0402 1%
PC303
1n_0402
8132_VSET2
PC301
1u_0603
PR246
7.15K0402
PR248
1K_0402
PR249
20K_0402
PC304
1n_0402
PC305
0.1u_0603
PC302
1n_0402
PR245
100K0402 1%
8132_VSET2
PR250
0R_0402
+1_2VRUN_PG
35
+3VRUN
PR251
100K_0402
PR252
0R0402
+1V_VGA_PG
J20
X
13
+1_8VRUN_PG
PR253
100K_0402
PR256
100K_0402
+5VRUN
PC306
4.7u_0805
PU10
APL5912
VCNTL
VIN
POK
EN
VOUT
FB
GND
PC307
4.7u_0805
+1_5VRUN_PG
GB1
+1.5VRUN
PC308
100u_3528
PR257
15.8K_0402
PR258
18K0402 1%
PC309
0.01u_0402

MSI CORPORATION

Title
VGA +1V_VGA , 1.8VRUN , 1_5VRUN

Size: Custom
Document Number: MS-16332
Rev: 0A

Date: Monday, April 10, 2006
Sheet 36 of 40

Current Limit at 35 Amp

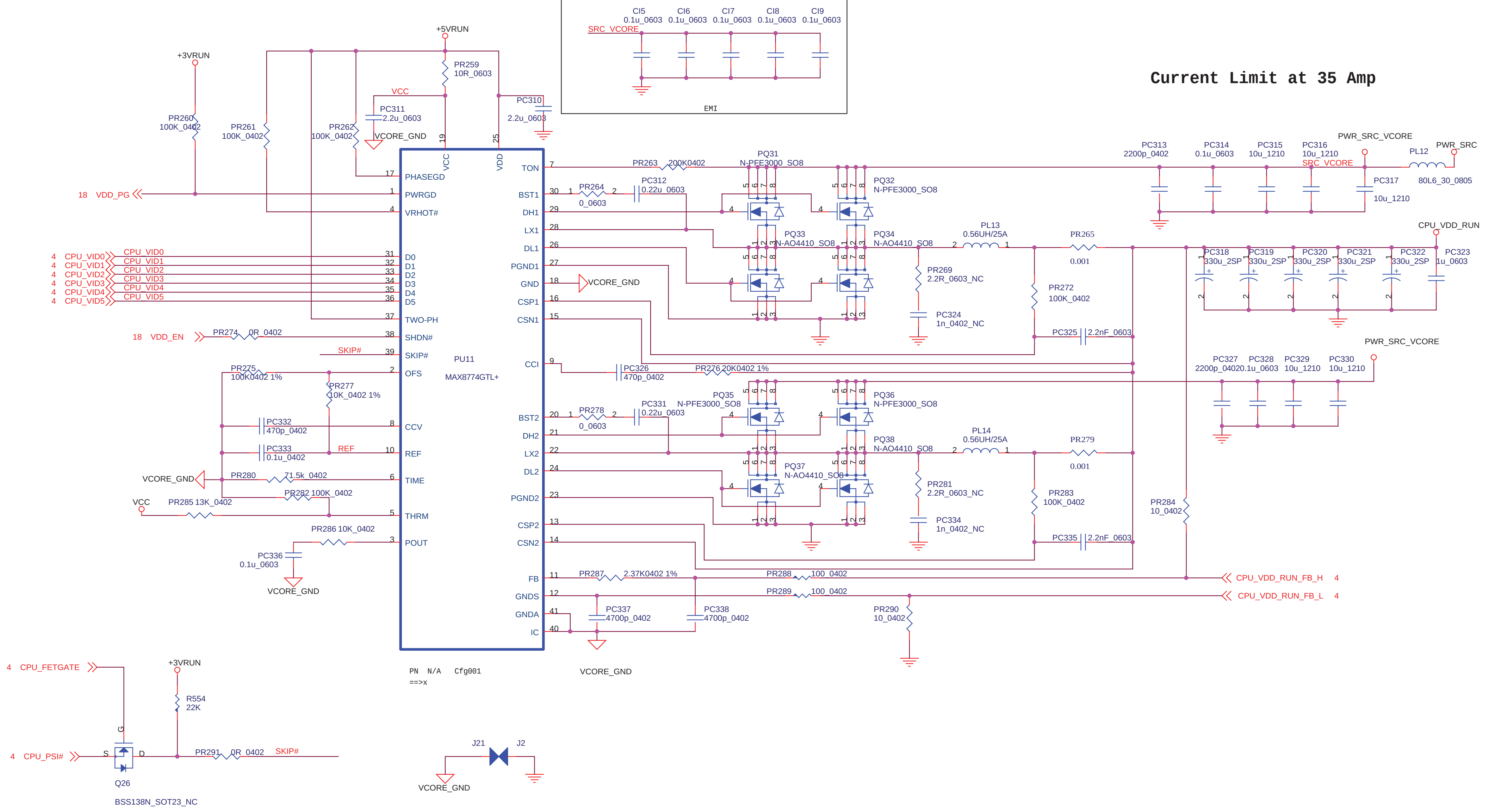

CI5 0.1u_0603
CI6 0.1u_0603
CI7 0.1u_0603
CI8 0.1u_0603
CI9 0.1u_0603
SRC_VCORE
EMI
+5VRUN
+3VRUN
PR259 10R_0603
VCC
PC310 2.2u_0603
PC311 2.2u_0603
VCORE_GND
PR260 100K_0402
PR261 100K_0402
PR262 100K_0402
18 VDD_PG
PHASEGD
PWRGD
VRHOT#
VCC
VDD
TON
BST1
DH1
LX1
DL1
PGND1
GND
CSP1
CSN1
4 CPU_VID0
4 CPU_VID1
4 CPU_VID2
4 CPU_VID3
4 CPU_VID4
4 CPU_VID5
D0
D1
D2
D3
D4
D5
TWO-PH
SHDN#
SKIP#
OFS
18 VDD_EN
PR274 0R_0402
SKIP#
PU11
MAX8774GTL+
CCI
PR275 100K0402 1%
PR277 10K_0402 1%
PC332 470p_0402
PC333 0.1u_0402
REF
CCV
REF
TIME
THRM
POUT
PR280 71.5k_0402
PR282 100K_0402
VCC
PR285 13K_0402
PR286 10K_0402
PC336 0.1u_0603
VCORE_GND
BST2
DH2
LX2
DL2
PGND2
CSP2
CSN2
FB
GNDS
GNDA
IC
PR263 200K0402
PR264 0_0603
PC312 0.22u_0603
PQ31 N-PFE3000_SO8
PQ32 N-PFE3000_SO8
PQ33 N-AO4410_SO8
PQ34 N-AO4410_SO8
PL13 0.56UH/25A
PR265 0.001
PR269 2.2R_0603_NC
PC324 1n_0402_NC
PR272 100K_0402
PC325 2.2nF_0603
PC326 470p_0402
PR276 20K0402 1%
PR278 0_0603
PC331 0.22u_0603
PQ35 N-PFE3000_SO8
PQ36 N-PFE3000_SO8
PQ37 N-AO4410_SO8
PQ38 N-AO4410_SO8
PL14 0.56UH/25A
PR279 0.001
PR281 2.2R_0603_NC
PC334 1n_0402_NC
PR283 100K_0402
PC335 2.2nF_0603
PR284 10_0402
PR287 2.37K0402 1%
PR288 100_0402
PR289 100_0402
PC337 4700p_0402
PC338 4700p_0402
PR290 10_0402
CPU_VDD_RUN_FB_H 4
CPU_VDD_RUN_FB_L 4
PC313 2200p_0402
PC314 0.1u_0603
PC315 10u_1210
PC316 10u_1210
SRC_VCORE
PWR_SRC_VCORE
PL12 80L6_30_0805
PWR_SRC
PC317 10u_1210
CPU_VDD_RUN
PC318 330u_2SP
PC319 330u_2SP
PC320 330u_2SP
PC321 330u_2SP
PC322 330u_2SP
PC323 1u_0603
PWR_SRC_VCORE
PC327 2200p_0402
PC328 0.1u_0603
PC329 10u_1210
PC330 10u_1210
PN N/A Cfg001
==>x
VCORE_GND
4 CPU_FETGATE
+3VRUN
R554 22K
4 CPU_PSI#
PR291 0R_0402
SKIP#
Q26
BSS138N_SOT23_NC
J21
J2
VCORE_GND

MSI CORPORATION

Title
VCORE

Size Custom
Document Number MS-16332
Rev 0A

Date: Monday, April 10, 2006
Sheet 37 of 40

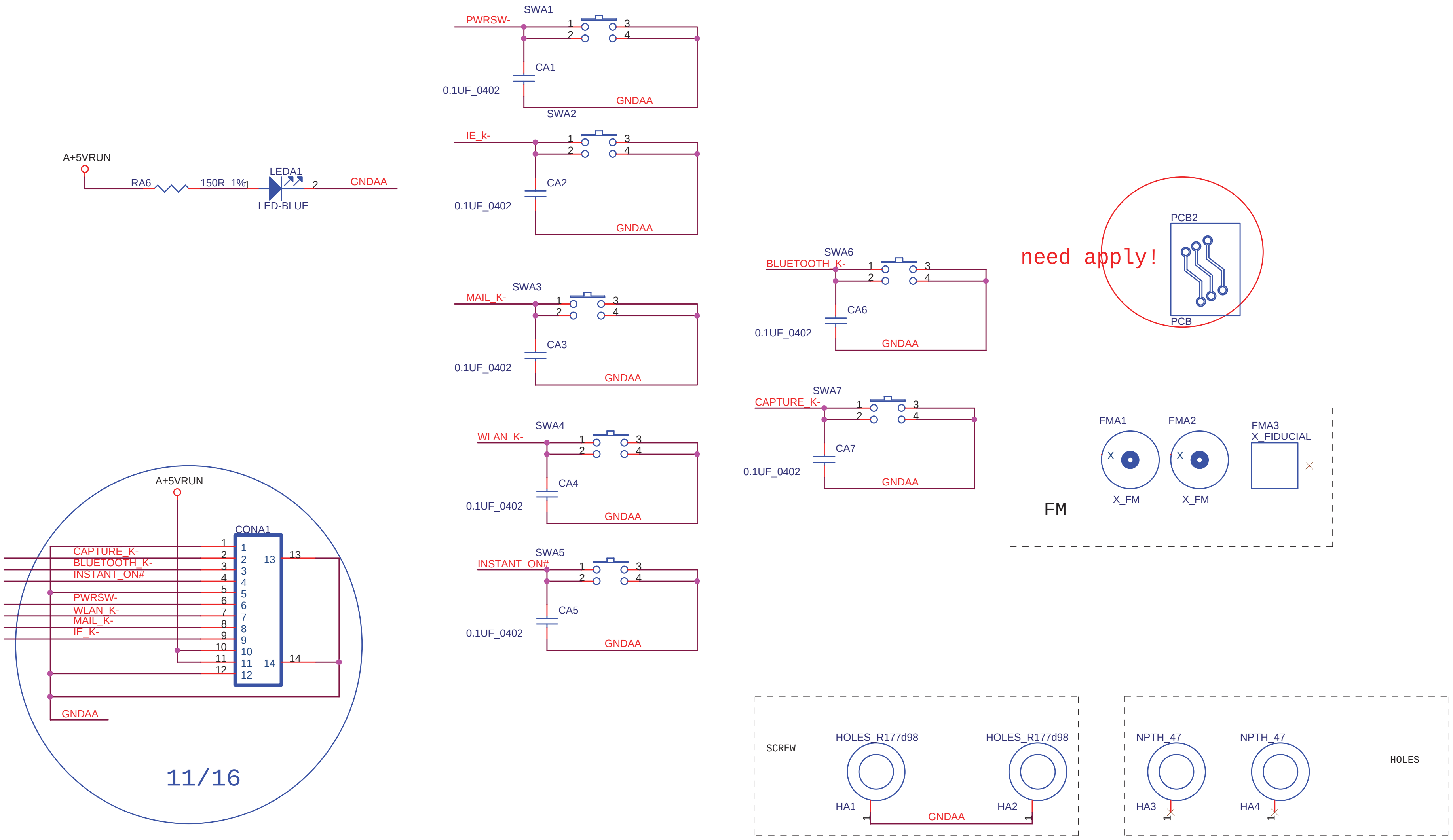
SWA1
PWRSW-
CA1
0.1UF_0402
GNDAA
SWA2
IE_k-
CA2
0.1UF_0402
GNDAA
A+5VRUN
RA6
150R_1%
LEDA1
LED-BLUE
GNDAA
SWA3
MAIL_K-
CA3
0.1UF_0402
GNDAA
SWA4
WLAN_K-
CA4
0.1UF_0402
GNDAA
SWA5
INSTANT_ON#
CA5
0.1UF_0402
GNDAA
SWA6
BLUETOOTH_K-
CA6
0.1UF_0402
GNDAA
SWA7
CAPTURE_K-
CA7
0.1UF_0402
GNDAA
need apply!
PCB2
PCB
FMA1
FMA2
FMA3
X_FIDUCIAL
X_FM
X_FM
FM
A+5VRUN
CONA1
CAPTURE_K-
BLUETOOTH_K-
INSTANT_ON#
PWRSW-
WLAN_K-
MAIL_K-
IE_K-
GNDAA
11/16
SCREW
HOLES_R177d98
HOLES_R177d98
HA1
HA2
GNDAA
NPTH_47
NPTH_47
HA3
HA4
HOLES

MSI CORPORATION

Title
POWER BOARD

Size	Document Number	Rev
B	**MS-16332**	0.A

Date: Monday, April 10, 2006 Sheet 38 of 40

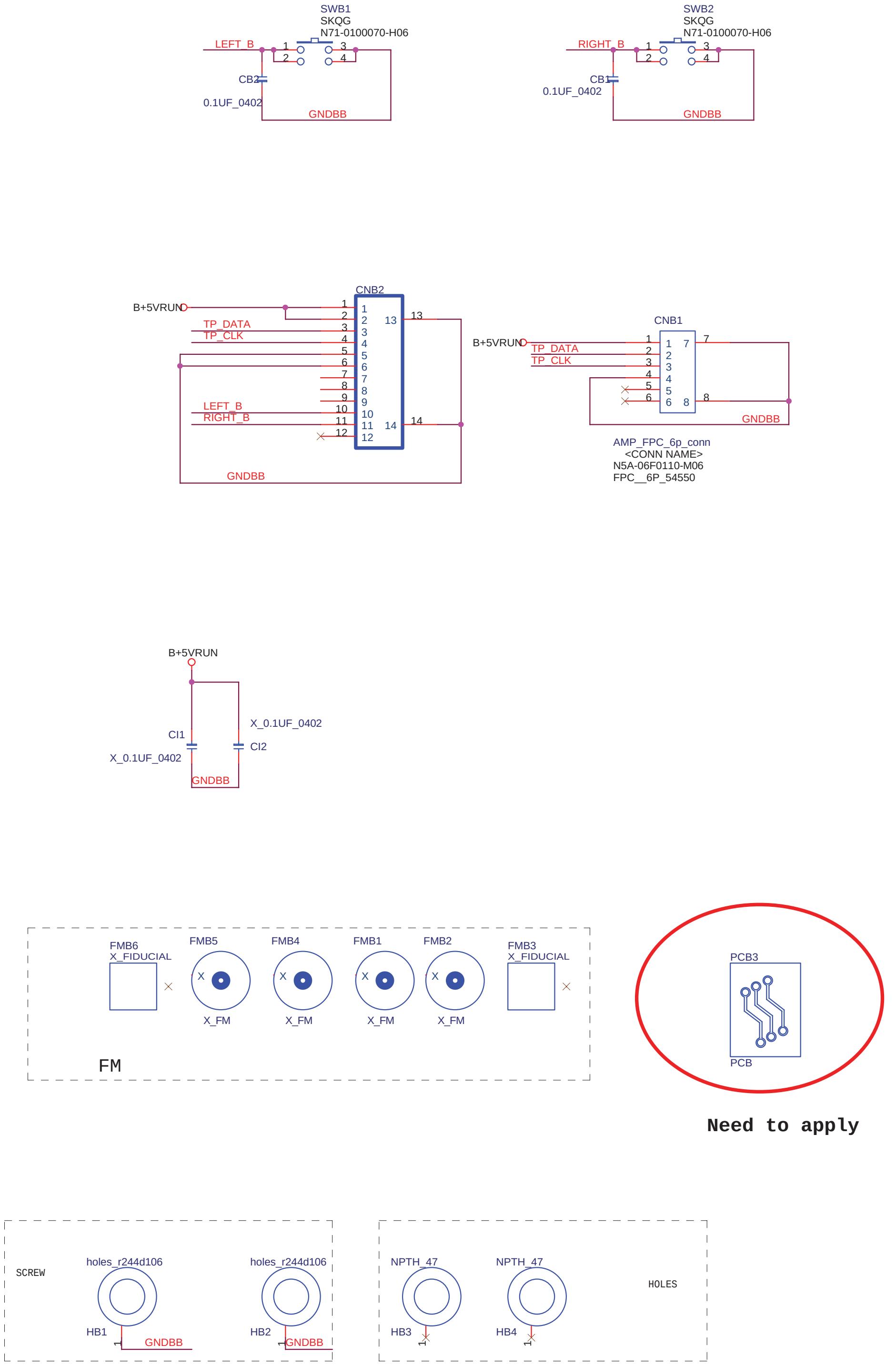
SWB1
SKQG
N71-0100070-H06
LEFT_B
CB2
0.1UF_0402
GNDBB
SWB2
SKQG
N71-0100070-H06
RIGHT_B
CB1
0.1UF_0402
GNDBB
CNB2
B+5VRUN
TP_DATA
TP_CLK
LEFT_B
RIGHT_B
13
14
GNDBB
CNB1
B+5VRUN
TP_DATA
TP_CLK
GNDBB
AMP_FPC_6p_conn
<CONN NAME>
N5A-06F0110-M06
FPC__6P_54550
B+5VRUN
CI1
X_0.1UF_0402
X_0.1UF_0402
CI2
GNDBB
FMB6
X_FIDUCIAL
FMB5
FMB4
FMB1
FMB2
FMB3
X_FIDUCIAL
X_FM
X_FM
X_FM
X_FM
FM
PCB3
PCB
SCREW
holes_r244d106
holes_r244d106
HB1
GNDBB
HB2
GNDBB
NPTH_47
NPTH_47
HB3
HB4
HOLES

Need to apply

MSI CORPORATION

Title
TP Board

Size	Document Number	Rev
Custom	**MS-16332**	0.A

Date: Monday, April 10, 2006 Sheet 39 of 40

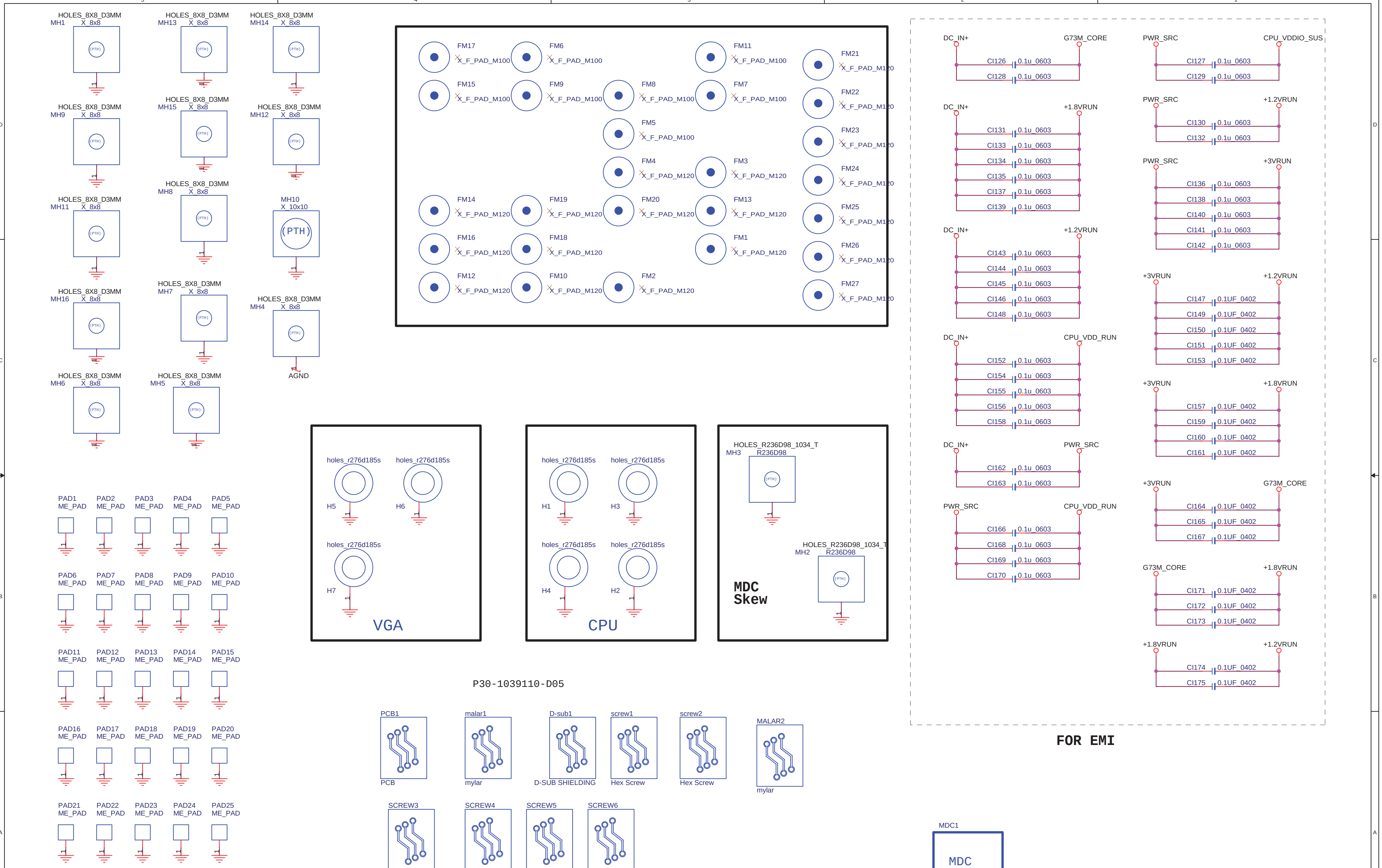
5
4
3
2
1
D
C
B
A
HOLES_8X8_D3MM
MH1 X_8x8
HOLES_8X8_D3MM
MH13 X_8x8
HOLES_8X8_D3MM
MH14 X_8x8
HOLES_8X8_D3MM
MH9 X_8x8
HOLES_8X8_D3MM
MH15 X_8x8
HOLES_8X8_D3MM
MH12 X_8x8
HOLES_8X8_D3MM
MH11 X_8x8
HOLES_8X8_D3MM
MH8 X_8x8
MH10
X_10x10
(PTH)
HOLES_8X8_D3MM
MH16 X_8x8
HOLES_8X8_D3MM
MH7 X_8x8
HOLES_8X8_D3MM
MH4 X_8x8
AGND
HOLES_8X8_D3MM
MH6 X_8x8
HOLES_8X8_D3MM
MH5 X_8x8
FM17 X_F_PAD_M100
FM6 X_F_PAD_M100
FM11 X_F_PAD_M100
FM21 X_F_PAD_M120
FM15 X_F_PAD_M100
FM9 X_F_PAD_M100
FM8 X_F_PAD_M100
FM7 X_F_PAD_M100
FM22 X_F_PAD_M120
FM5 X_F_PAD_M100
FM23 X_F_PAD_M120
FM4 X_F_PAD_M120
FM3 X_F_PAD_M120
FM24 X_F_PAD_M120
FM14 X_F_PAD_M120
FM19 X_F_PAD_M120
FM20 X_F_PAD_M120
FM13 X_F_PAD_M120
FM25 X_F_PAD_M120
FM16 X_F_PAD_M120
FM18 X_F_PAD_M120
FM1 X_F_PAD_M120
FM26 X_F_PAD_M120
FM12 X_F_PAD_M120
FM10 X_F_PAD_M120
FM2 X_F_PAD_M120
FM27 X_F_PAD_M120
holes_r276d185s H5
holes_r276d185s H6
holes_r276d185s H7
VGA
holes_r276d185s H1
holes_r276d185s H3
holes_r276d185s H4
holes_r276d185s H2
CPU
HOLES_R236D98_1034_T
MH3 R236D98
HOLES_R236D98_1034_T
MH2 R236D98
MDC
Skew
DC_IN+ G73M_CORE
CI126 0.1u_0603
CI128 0.1u_0603
PWR_SRC CPU_VDDIO_SUS
CI127 0.1u_0603
CI129 0.1u_0603
DC_IN+ +1.8VRUN
CI131 0.1u_0603
CI133 0.1u_0603
CI134 0.1u_0603
CI135 0.1u_0603
CI137 0.1u_0603
CI139 0.1u_0603
PWR_SRC +1.2VRUN
CI130 0.1u_0603
CI132 0.1u_0603
PWR_SRC +3VRUN
CI136 0.1u_0603
CI138 0.1u_0603
CI140 0.1u_0603
CI141 0.1u_0603
CI142 0.1u_0603
DC_IN+ +1.2VRUN
CI143 0.1u_0603
CI144 0.1u_0603
CI145 0.1u_0603
CI146 0.1u_0603
CI148 0.1u_0603
+3VRUN +1.2VRUN
CI147 0.1UF_0402
CI149 0.1UF_0402
CI150 0.1UF_0402
CI151 0.1UF_0402
CI153 0.1UF_0402
DC_IN+ CPU_VDD_RUN
CI152 0.1u_0603
CI154 0.1u_0603
CI155 0.1u_0603
CI156 0.1u_0603
CI158 0.1u_0603
+3VRUN +1.8VRUN
CI157 0.1UF_0402
CI159 0.1UF_0402
CI160 0.1UF_0402
CI161 0.1UF_0402
DC_IN+ PWR_SRC
CI162 0.1u_0603
CI163 0.1u_0603
+3VRUN G73M_CORE
CI164 0.1UF_0402
CI165 0.1UF_0402
CI167 0.1UF_0402
PWR_SRC CPU_VDD_RUN
CI166 0.1u_0603
CI168 0.1u_0603
CI169 0.1u_0603
CI170 0.1u_0603
G73M_CORE +1.8VRUN
CI171 0.1UF_0402
CI172 0.1UF_0402
CI173 0.1UF_0402
+1.8VRUN +1.2VRUN
CI174 0.1UF_0402
CI175 0.1UF_0402
FOR EMI
PAD1 ME_PAD
PAD2 ME_PAD
PAD3 ME_PAD
PAD4 ME_PAD
PAD5 ME_PAD
PAD6 ME_PAD
PAD7 ME_PAD
PAD8 ME_PAD
PAD9 ME_PAD
PAD10 ME_PAD
PAD11 ME_PAD
PAD12 ME_PAD
PAD13 ME_PAD
PAD14 ME_PAD
PAD15 ME_PAD
PAD16 ME_PAD
PAD17 ME_PAD
PAD18 ME_PAD
PAD19 ME_PAD
PAD20 ME_PAD
PAD21 ME_PAD
PAD22 ME_PAD
PAD23 ME_PAD
PAD24 ME_PAD
PAD25 ME_PAD
P30-1039110-D05
PCB1 PCB
malar1 mylar
D-sub1 D-SUB SHIELDING
screw1 Hex Screw
screw2 Hex Screw
MALAR2 mylar
SCREW3 Screw M2L3
SCREW4 Screw M2L3
SCREW5 Screw M2L3
SCREW6 Screw M2L3
MDC1
MDC
MDC1

MICRO-STAR INT'L CO.,LTD.

Title
Screw

Size Custom
Document Number **MS-16332**
Rev 0.A

Date: Monday, April 10, 2006
Sheet 40 of 40