ASPEN

UMA MV - BUILD

FINAL BUILD 2004.12.13

DATE	CHANGE NO.	REV

	EE	DATE	POWER	DATE
DRAWER				
DESIGN				
CHECK				
RESPONSIBLE				

SIZE = 3 VER :

FILE NAME : XXXX-XXXXXX-XX

P/N XXXXXXXXXXXX

INVENTEC

TITLE *ASPEN-UMA*

SIZE	CODE	DOC. NUMBER	REV
A3	CS		

SHEET OF

TABLE OF CONTENTS

PAGE

5- DC& BATTERY CHANGER

6- SELECT & BATTERY CONN
7- SYSTEM POWER(3V/5V/12V)
8- SYSTEM POWER(V1.2L/V2.5S)
9- SYSTEM POWER(VGAVCC/V1.5A)

10- D/B SYSTEM POWER(V1.8/VCCP)
11- CPU POWER(VCC_CORE)
12- SYSTEM POWER (V0.9)
13- POWER(SLEEP)
14- POWER(SEQUENCE)
15- CLOCK_GENERATOR
16- DOTHAN-1
17- DOTHAN-2
18- DOTHAN-3
19- DOTHAN-4
20- THERMAL&FAN CONTROLLER
21- ALVISO-1
22- ALVISO-2
23- ALVISO-3
24- ALVISO-4
25- ALVISO-5
26- DDR2-DIMM0
27- DDR2-DIMM1
28- DDR2-DAMPING

PAGE

29- DVI-CONTROLLER
30- BLANK
31- BLANK
32- BLANK
33- BLANK
34- BLANK
35- CRT& SVEDIO CONN
36- LCD CONN
37- ICH6-1
38- ICH6-2
39- ICH6-3
40- ICH6-4
41- ICH6-5
42- KBC
43- FWH

44- INT.KBC/POINT DEVICES
45- SUPER I/O
46- SERIAL PORT
(SERIAL DAUGHTER BOARD)
47- BLANK
48- AC97 CODEC

49- EQ&MIC JACK
(USB DAUGHTER BOARD)
50- AUDIO AMP&HP JACK

PAGE

51- HDD CONN
52- MULTIBAY CONN
53- USB&IR CONN
(USB DAUGHTER BOARD)
54- CARDBUS CONTROLL
55- PC CARD SLOT
56- SD CARD CONN
57- BLANK

58- MINIPCI CONN
59- LAN INTERFACE-1
60- LAN RJ45 CONN
61- DOCKING CONN
62- SCREW
63- MDC CONN

64- TCPA CONN

65- BLUETOOTH
66- LED / LID_SWITCH
67- LED BOARD / CNN
(LED DAUGHTER BOARD)

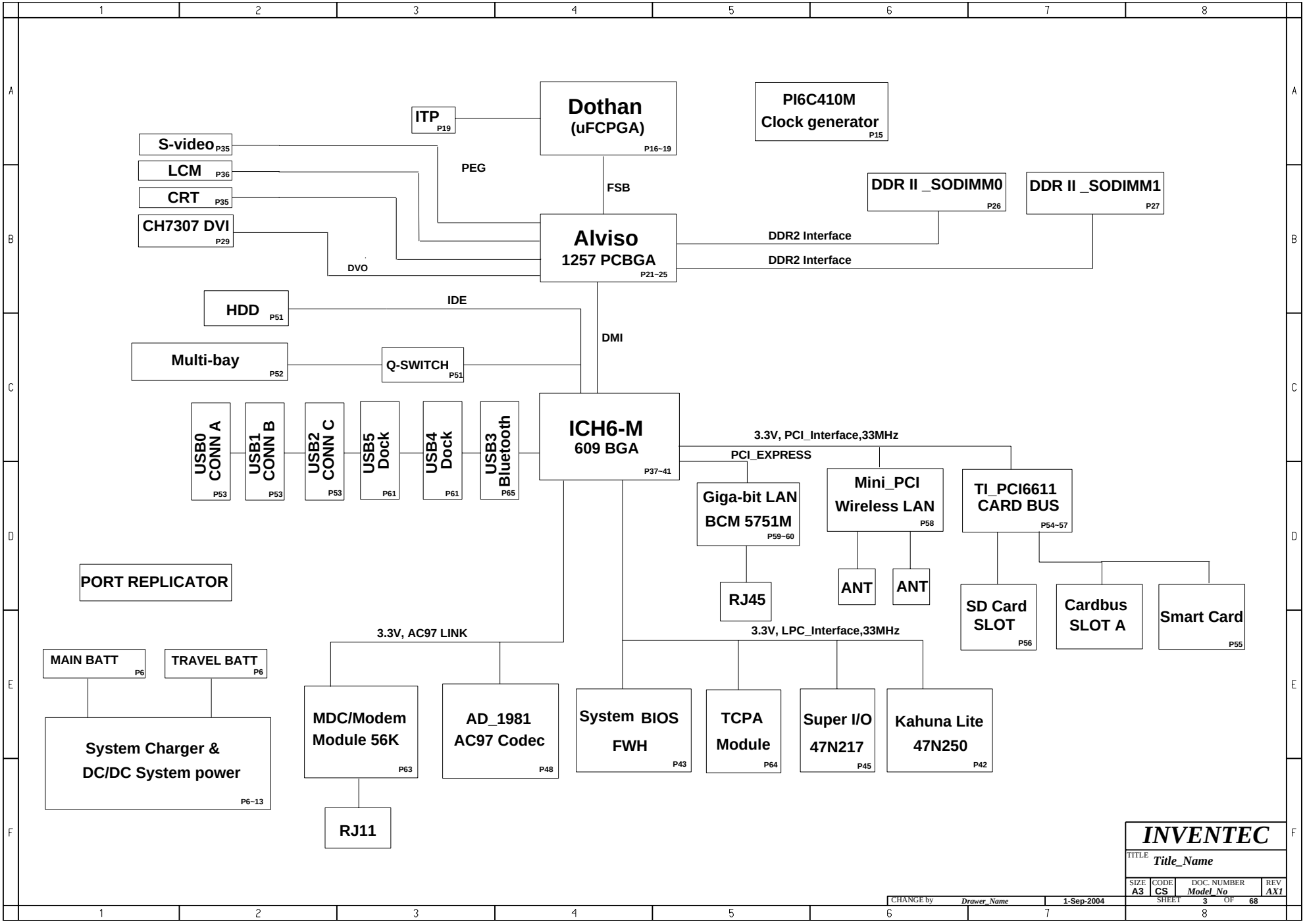
Dothan
(uFCPGA)
P16~19
ITP
P19
PI6C410M
Clock generator
P15
S-video P35
LCM P36
CRT P35
CH7307 DVI
P29
PEG
FSB
DDR II _SODIMM0
P26
DDR II _SODIMM1
P27
Alviso
1257 PCBGA
P21~25
DDR2 Interface
DDR2 Interface
DVO
HDD P51
IDE
DMI
Multi-bay
P52
Q-SWITCH
P51
USB0 CONN A
P53
USB1 CONN B
P53
USB2 CONN C
P53
USB5 Dock
P61
USB4 Dock
P61
USB3 Bluetooth
P65
ICH6-M
609 BGA
P37~41
3.3V, PCI_Interface,33MHz
PCI_EXPRESS
Giga-bit LAN
BCM 5751M
P59~60
Mini_PCI
Wireless LAN
P58
TI_PCI6611
CARD BUS
P54~57
RJ45
ANT
ANT
SD Card
SLOT
P56
Cardbus
SLOT A
Smart Card
P55
PORT REPLICATOR
3.3V, AC97 LINK
3.3V, LPC_Interface,33MHz
MAIN BATT
P6
TRAVEL BATT
P6
System Charger &
DC/DC System power
P6~13
MDC/Modem
Module 56K
P63
RJ11
AD_1981
AC97 Codec
P48
System BIOS
FWH
P43
TCPA
Module
P64
Super I/O
47N217
P45
Kahuna Lite
47N250
P42
INVENTEC
TITLE Title_Name
SIZE A3
CODE CS
DOC. NUMBER Model_No
REV AX1
SHEET 3 OF 68
CHANGE by Drawer_Name
1-Sep-2004

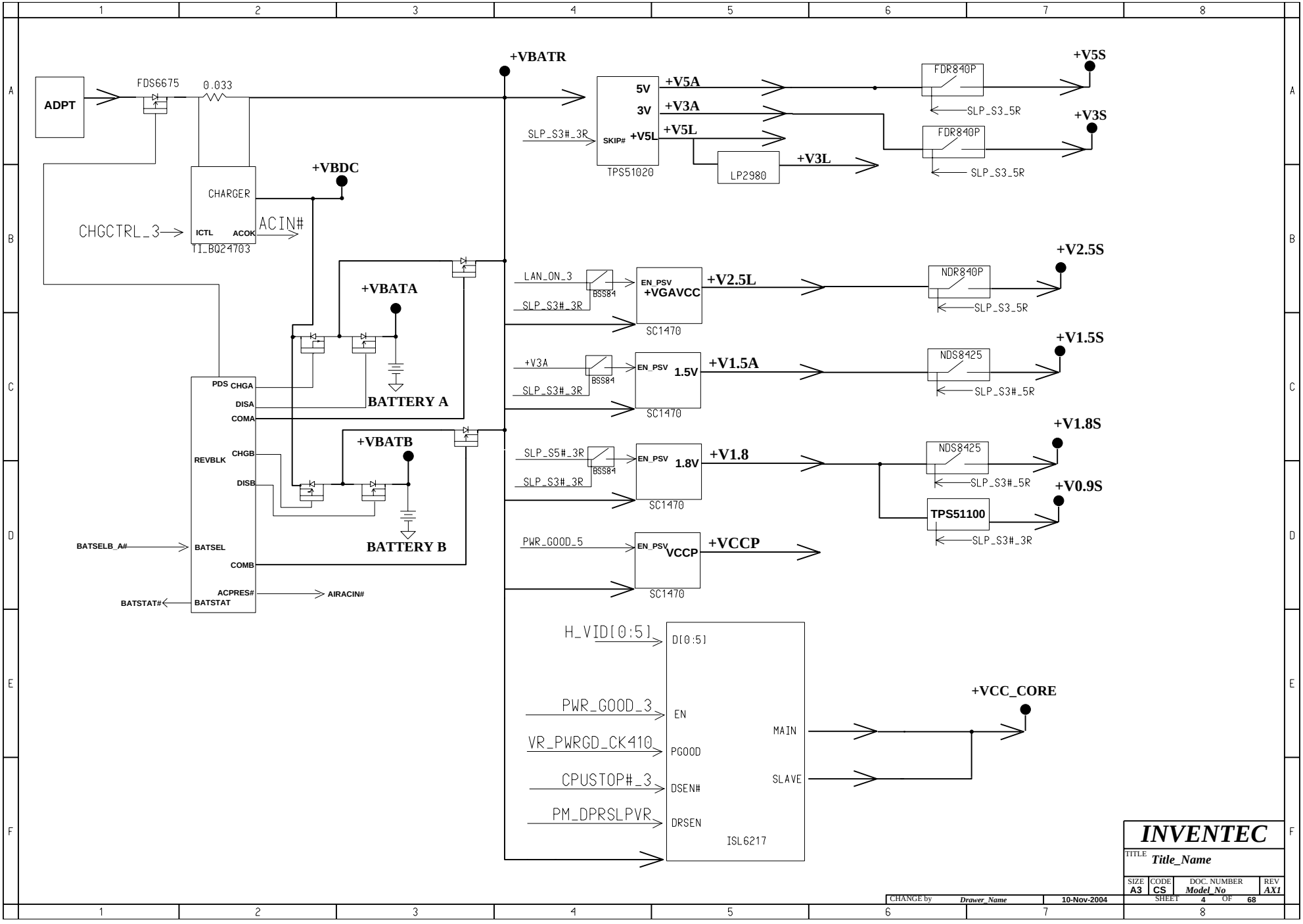

INVENTEC

TITLE Title_Name

SIZE	CODE	DOC. NUMBER	REV
A3	CS	Model_No	AX1

CHANGE by Drawer_Name 10-Nov-2004

SHEET 4 OF 68

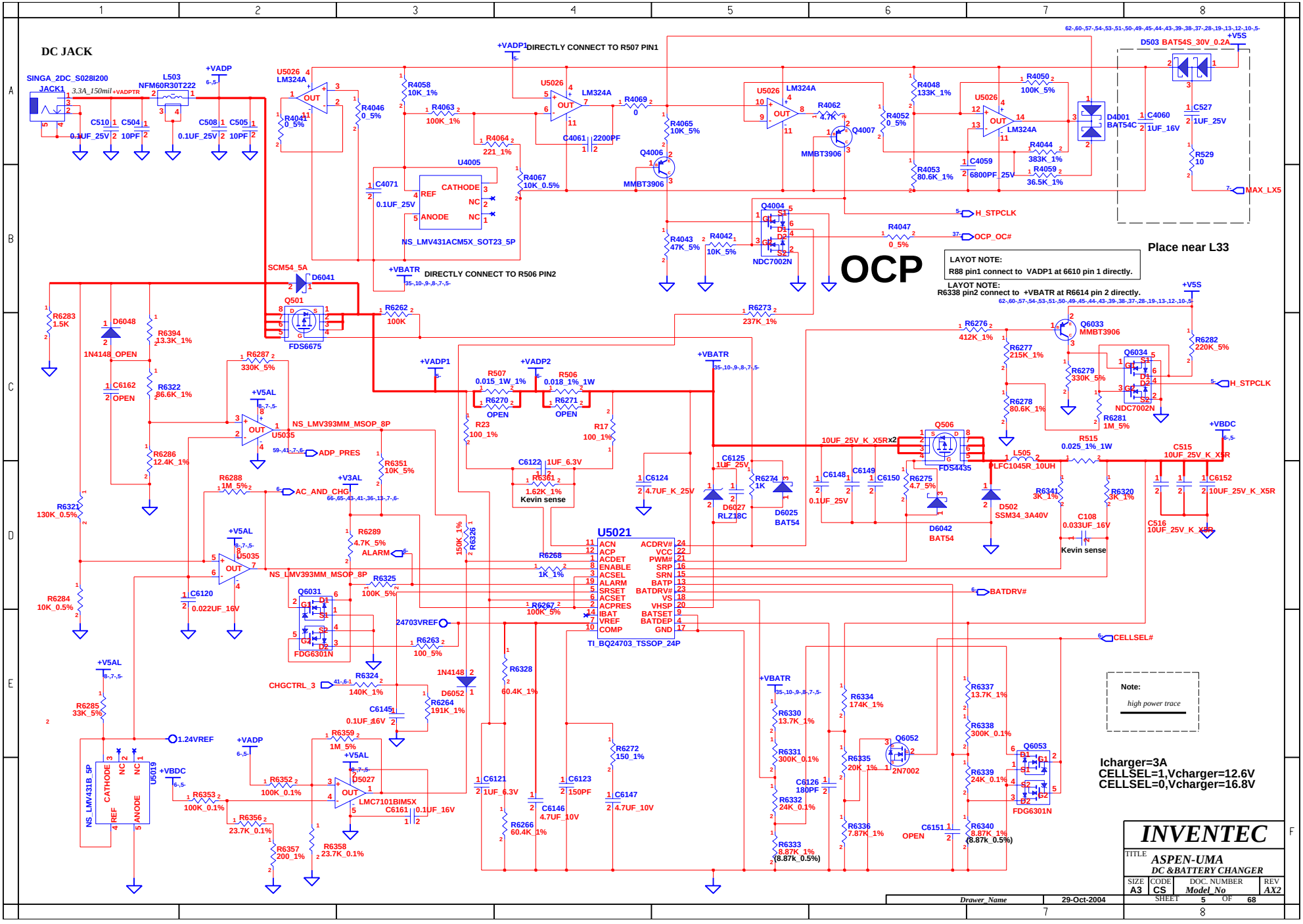
DC JACK
OCP
Place near L33
LAYOT NOTE:
R88 pin1 connect to VADP1 at 6610 pin 1 directly.
LAYOT NOTE:
R6338 pin2 connect to +VBATR at R6614 pin 2 directly.
DIRECTLY CONNECT TO R507 PIN1
DIRECTLY CONNECT TO R506 PIN2
U5021
TI_BQ24703_TSSOP_24P
Note:
high power trace
Icharger=3A
CELLSEL=1,Vcharger=12.6V
CELLSEL=0,Vcharger=16.8V
INVENTEC
ASPEN-UMA
DC &BATTERY CHANGER
SIZE A3
CODE CS
DOC. NUMBER Model_No
REV AX2
SHEET 5 OF 68
Drawer_Name
29-Oct-2004

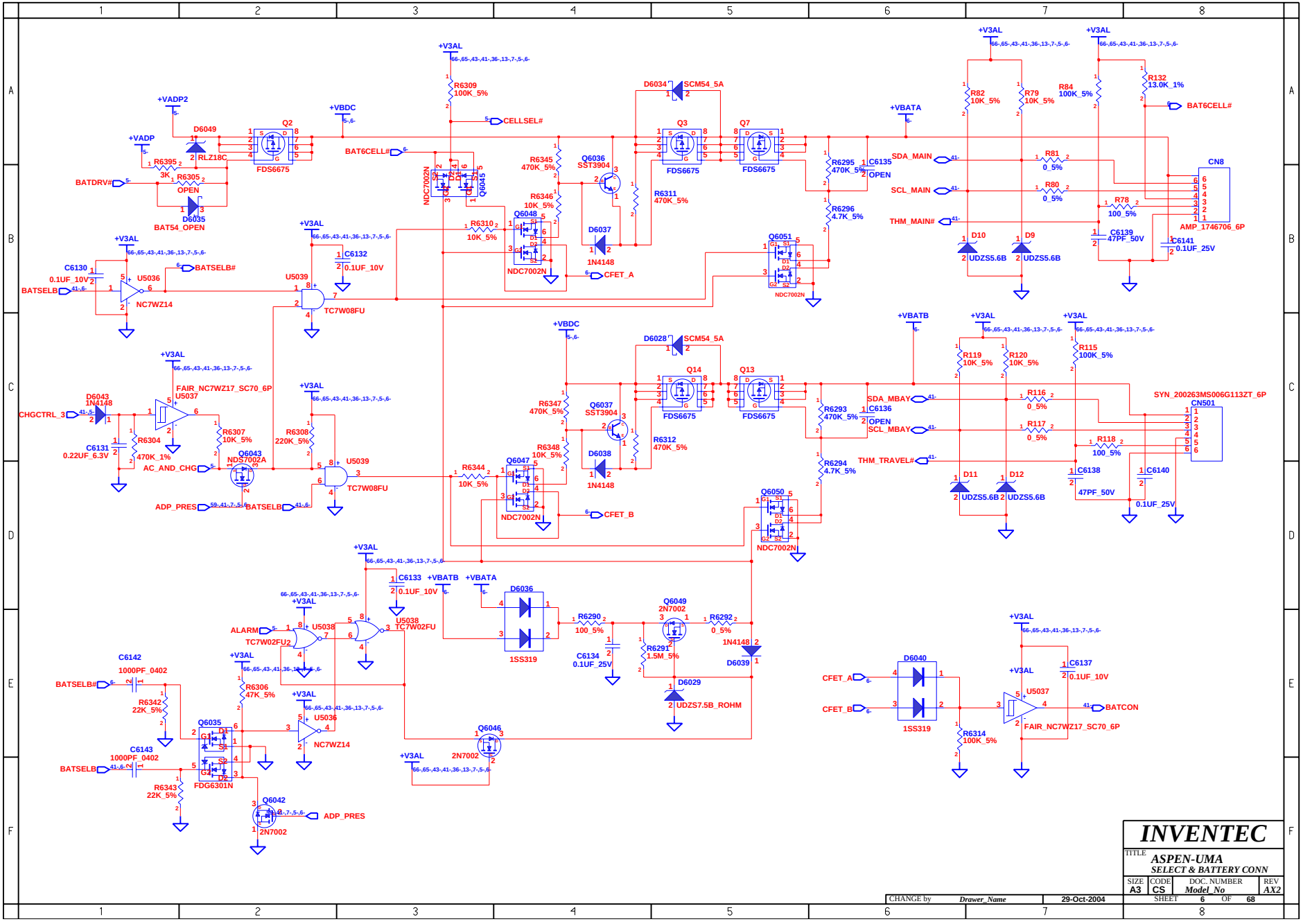

INVENTEC			
TITLE	ASPEN-UMA SELECT & BATTERY CONN		
SIZE A3	CODE CS	DOC. NUMBER Model_No	REV AX2
CHANGE by Drawer_Name	29-Oct-2004	SHEET 6 OF 68	

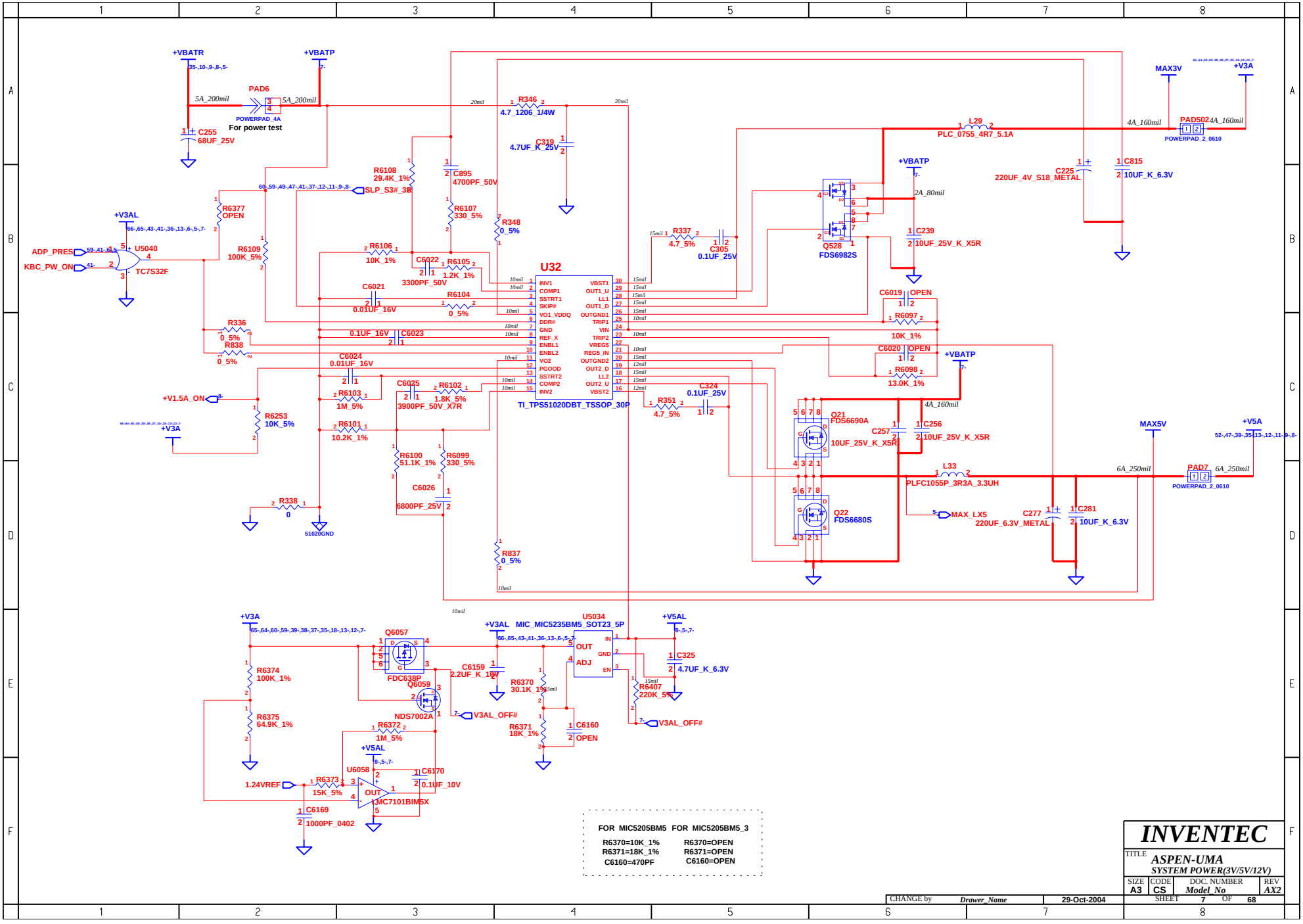
+VBATR
+VBATP
PAD6
POWERPAD_4A
For power test
5A_200mil
C255
68UF_25V
R346
4.7_1206_1/4W
C319
4.7UF_K_25V
R6108
29.4K_1%
C895
4700PF_50V
SLP_S3#_3B
R6107
330_5%
R348
0_5%
R6377
OPEN
+V3AL
ADP_PRES
KBC_PW_ON
U5040
TC7S32F
R6109
100K_5%
R6106
10K_1%
C6022
3300PF_50V
R6105
1.2K_1%
C6021
0.01UF_16V
R6104
0_5%
U32
TI_TPS51020DBT_TSSOP_30P
INV1
COMP1
SSTRT1
SKIP#
VO1_VDDQ
DDR#
GND
REF_X
ENBL1
ENBL2
VO2
PGOOD
SSTRT2
COMP2
INV2
VBST1
OUT1_U
LL1
OUT1_D
OUTGND1
TRIP1
VIN
TRIP2
VREG5
REG5_IN
OUTGND2
OUT2_D
LL2
OUT2_U
VBST2
R336
0_5%
R838
0_5%
C6023
0.1UF_16V
C6024
0.01UF_16V
+V1.5A_ON
R6253
10K_5%
+V3A
R6103
1M_5%
C6025
3900PF_50V_X7R
R6102
1.8K_5%
R6101
10.2K_1%
R6100
51.1K_1%
R6099
330_5%
C6026
6800PF_25V
R338
0
51020GND
R837
0_5%
R337
4.7_5%
C305
0.1UF_25V
R351
4.7_5%
C324
0.1UF_25V
Q528
FDS6982S
C239
10UF_25V_K_X5R
L29
PLC_0755_4R7_5.1A
C225
220UF_4V_S18_METAL
C815
10UF_K_6.3V
MAX3V
+V3A
PAD502
POWERPAD_2_0610
C6019
OPEN
R6097
10K_1%
C6020
OPEN
R6098
13.0K_1%
Q21
FDS6690A
C257
10UF_25V_K_X5R
C256
10UF_25V_K_X5R
Q22
FDS6680S
L33
PLFC1055P_3R3A_3.3UH
MAX_LX5
C277
220UF_6.3V_METAL
C281
10UF_K_6.3V
MAX5V
+V5A
PAD7
POWERPAD_2_0610
Q6057
FDC638P
Q6059
NDS7002A
C6159
2.2UF_K_10V
V3AL_OFF#
U5034
MIC_MIC5235BM5_SOT23_5P
OUT
ADJ
IN
GND
EN
R6370
30.1K_1%
R6371
18K_1%
C6160
OPEN
R6407
220K_5%
C325
4.7UF_K_6.3V
R6374
100K_1%
R6375
64.9K_1%
R6372
1M_5%
+V5AL
U6058
MC7101BIM5X
1.24VREF
R6373
15K_5%
C6170
0.1UF_10V
C6169
1000PF_0402
FOR MIC5205BM5 FOR MIC5205BM5_3
R6370=10K_1% R6370=OPEN
R6371=18K_1% R6371=OPEN
C6160=470PF C6160=OPEN
INVENTEC
TITLE
ASPEN-UMA
SYSTEM POWER(3V/5V/12V)
SIZE A3
CODE CS
DOC. NUMBER Model_No
REV AX2
SHEET 7 OF 68
CHANGE by Drawer_Name
29-Oct-2004

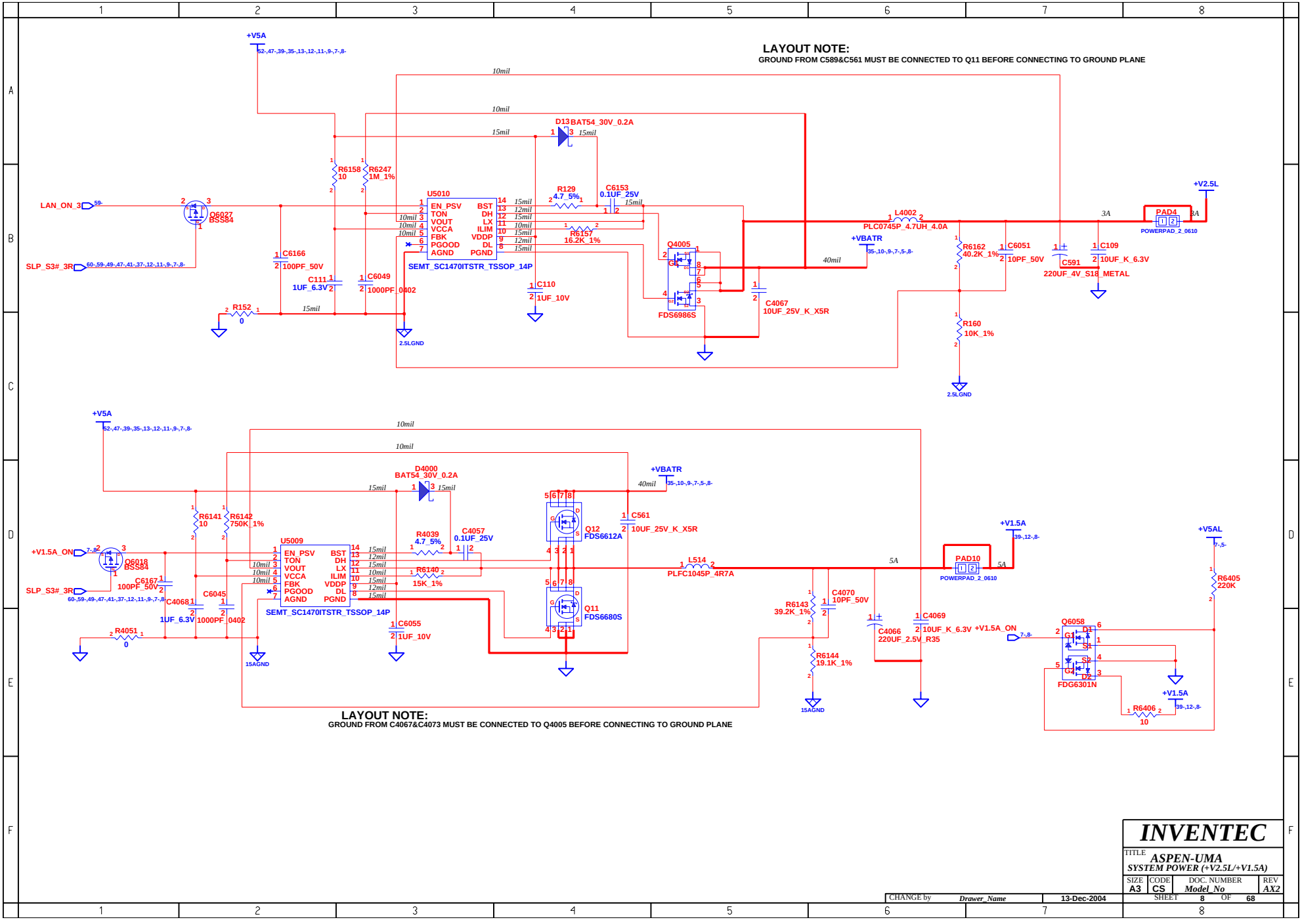
LAYOUT NOTE:
GROUND FROM C589&C561 MUST BE CONNECTED TO Q11 BEFORE CONNECTING TO GROUND PLANE
+V5A
52-,47-,39-,35-,13-,12-,11-,9-,7-,8-
10mil
15mil
D13 BAT54_30V_0.2A
R6158 10
R6247 1M_1%
U5010
EN_PSV
TON
VOUT
VCCA
FBK
PGOOD
AGND
BST
DH
LX
ILIM
VDDP
DL
PGND
SEMT_SC1470ITSTR_TSSOP_14P
LAN_ON_3
Q6027 BSS84
SLP_S3#_3R
60-,59-,49-,47-,41-,37-,12-,11-,9-,7-,8-
C6166 100PF_50V
C111 1UF_6.3V
C6049 1000PF_0402
R152 0
2.5LGND
R129 4.7_5%
C6153 0.1UF_25V
R6157 16.2K_1%
C110 1UF_10V
Q4005
FDS6986S
C4067 10UF_25V_K_X5R
+VBATR
35-,10-,9-,7-,5-,8-
40mil
L4002 PLC0745P_4.7UH_4.0A
3A
PAD4
POWERPAD_2_0610
+V2.5L
R6162 40.2K_1%
C6051 10PF_50V
C591 220UF_4V_S18_METAL
C109 10UF_K_6.3V
R160 10K_1%
2.5LGND
+V5A
52-,47-,39-,35-,13-,12-,11-,9-,7-,8-
10mil
15mil
D4000 BAT54_30V_0.2A
+VBATR
35-,10-,9-,7-,5-,8-
40mil
R6141 10
R6142 750K_1%
U5009
EN_PSV
TON
VOUT
VCCA
FBK
PGOOD
AGND
BST
DH
LX
ILIM
VDDP
DL
PGND
SEMT_SC1470ITSTR_TSSOP_14P
+V1.5A_ON
7-,8-
Q6018 BSS84
SLP_S3#_3R
60-,59-,49-,47-,41-,37-,12-,11-,9-,7-,8-
C6167 100PF_50V
C4068 1UF_6.3V
C6045 1000PF_0402
R4051 0
15AGND
R4039 4.7_5%
C4057 0.1UF_25V
R6140 15K_1%
C6055 1UF_10V
Q12 FDS6612A
C561 10UF_25V_K_X5R
Q11 FDS6680S
L514 PLFC1045P_4R7A
5A
PAD10
POWERPAD_2_0610
+V1.5A
39-,12-,8-
R6143 39.2K_1%
C4070 10PF_50V
R6144 19.1K_1%
C4066 220UF_2.5V_R35
C4069 10UF_K_6.3V
+V1.5A_ON
7-,8-
Q6058
FDG6301N
+V5AL
7-,5-
R6405 220K
R6406 10
+V1.5A
39-,12-,8-
LAYOUT NOTE:
GROUND FROM C4067&C4073 MUST BE CONNECTED TO Q4005 BEFORE CONNECTING TO GROUND PLANE
INVENTEC
TITLE
ASPEN-UMA
SYSTEM POWER (+V2.5L/+V1.5A)
SIZE A3
CODE CS
DOC. NUMBER Model_No
REV AX2
SHEET 8 OF 68
CHANGE by Drawer_Name
13-Dec-2004

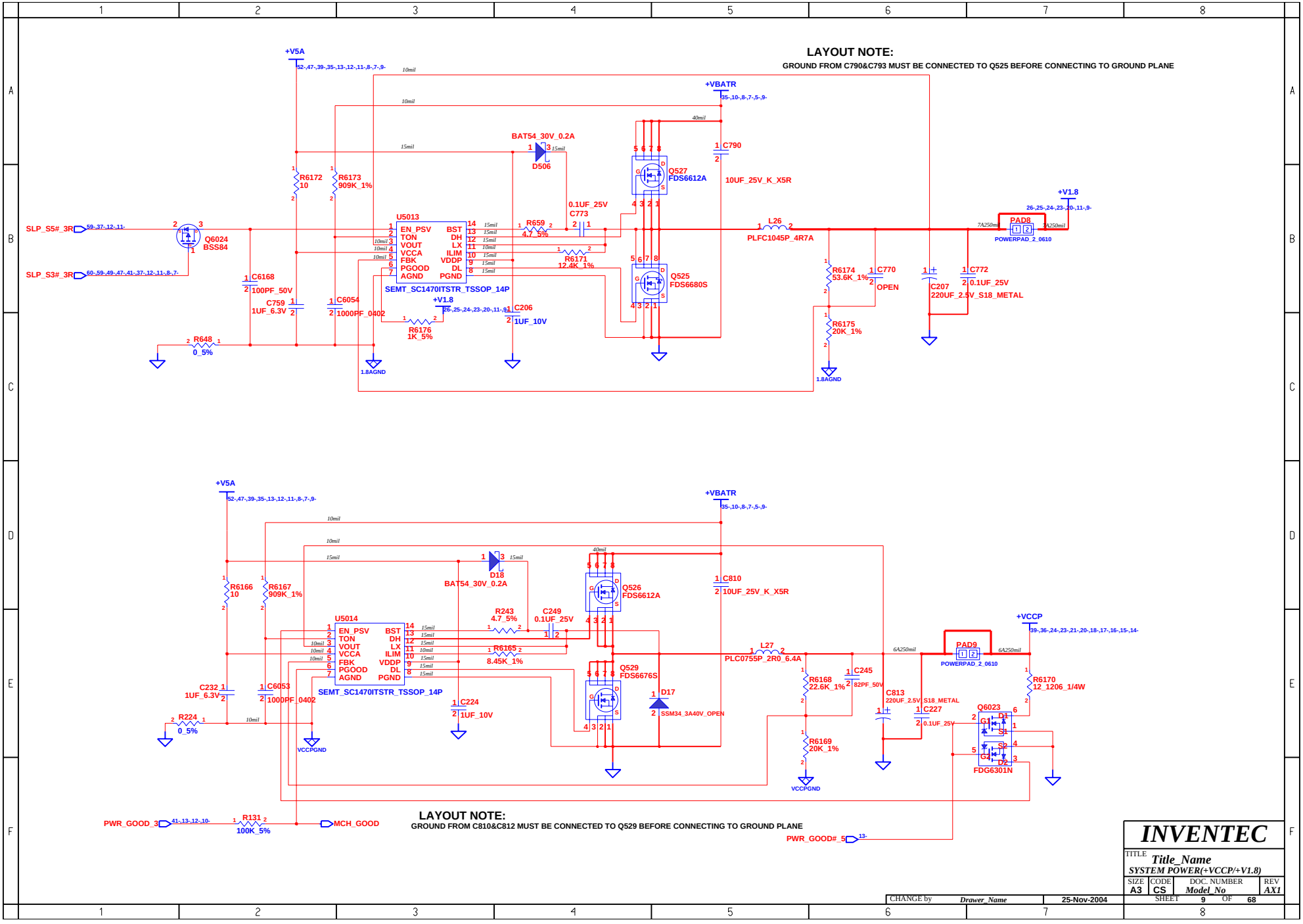
LAYOUT NOTE:
GROUND FROM C790&C793 MUST BE CONNECTED TO Q525 BEFORE CONNECTING TO GROUND PLANE
+V5A
+VBATR
+V1.8
SLP_S5#_3R
SLP_S3#_3R
Q6024
BSS84
R6172
10
R6173
909K_1%
U5013
EN_PSV
TON
VOUT
VCCA
FBK
PGOOD
AGND
BST
DH
LX
ILIM
VDDP
DL
PGND
SEMT_SC1470ITSTR_TSSOP_14P
BAT54_30V_0.2A
D506
R659
4.7_5%
0.1UF_25V
C773
R6171
12.4K_1%
Q527
FDS6612A
Q525
FDS6680S
C790
10UF_25V_K_X5R
L26
PLFC1045P_4R7A
PAD8
POWERPAD_2_0610
C6168
100PF_50V
C759
1UF_6.3V
C6054
1000PF_0402
R6176
1K_5%
C206
1UF_10V
R648
0_5%
1.8AGND
R6174
53.6K_1%
C770
OPEN
C207
220UF_2.5V_S18_METAL
C772
0.1UF_25V
R6175
20K_1%
U5014
SEMT_SC1470ITSTR_TSSOP_14P
R6166
10
R6167
909K_1%
D18
BAT54_30V_0.2A
R243
4.7_5%
C249
0.1UF_25V
R6165
8.45K_1%
Q526
FDS6612A
Q529
FDS6676S
C810
10UF_25V_K_X5R
L27
PLC0755P_2R0_6.4A
D17
SSM34_3A40V_OPEN
R6168
22.6K_1%
C245
82PF_50V
C813
220UF_2.5V_S18_METAL
C227
0.1UF_25V
R6169
20K_1%
+VCCP
PAD9
POWERPAD_2_0610
R6170
12_1206_1/4W
Q6023
FDG6301N
C232
1UF_6.3V
C6053
1000PF_0402
C224
1UF_10V
R224
0_5%
VCCPGND
PWR_GOOD_3
R131
100K_5%
MCH_GOOD
PWR_GOOD#_5
LAYOUT NOTE:
GROUND FROM C810&C812 MUST BE CONNECTED TO Q529 BEFORE CONNECTING TO GROUND PLANE
INVENTEC
TITLE
Title_Name
SYSTEM POWER(+VCCP/+V1.8)
SIZE A3
CODE CS
DOC. NUMBER Model_No
REV AX1
SHEET 9 OF 68
CHANGE by Drawer_Name
25-Nov-2004

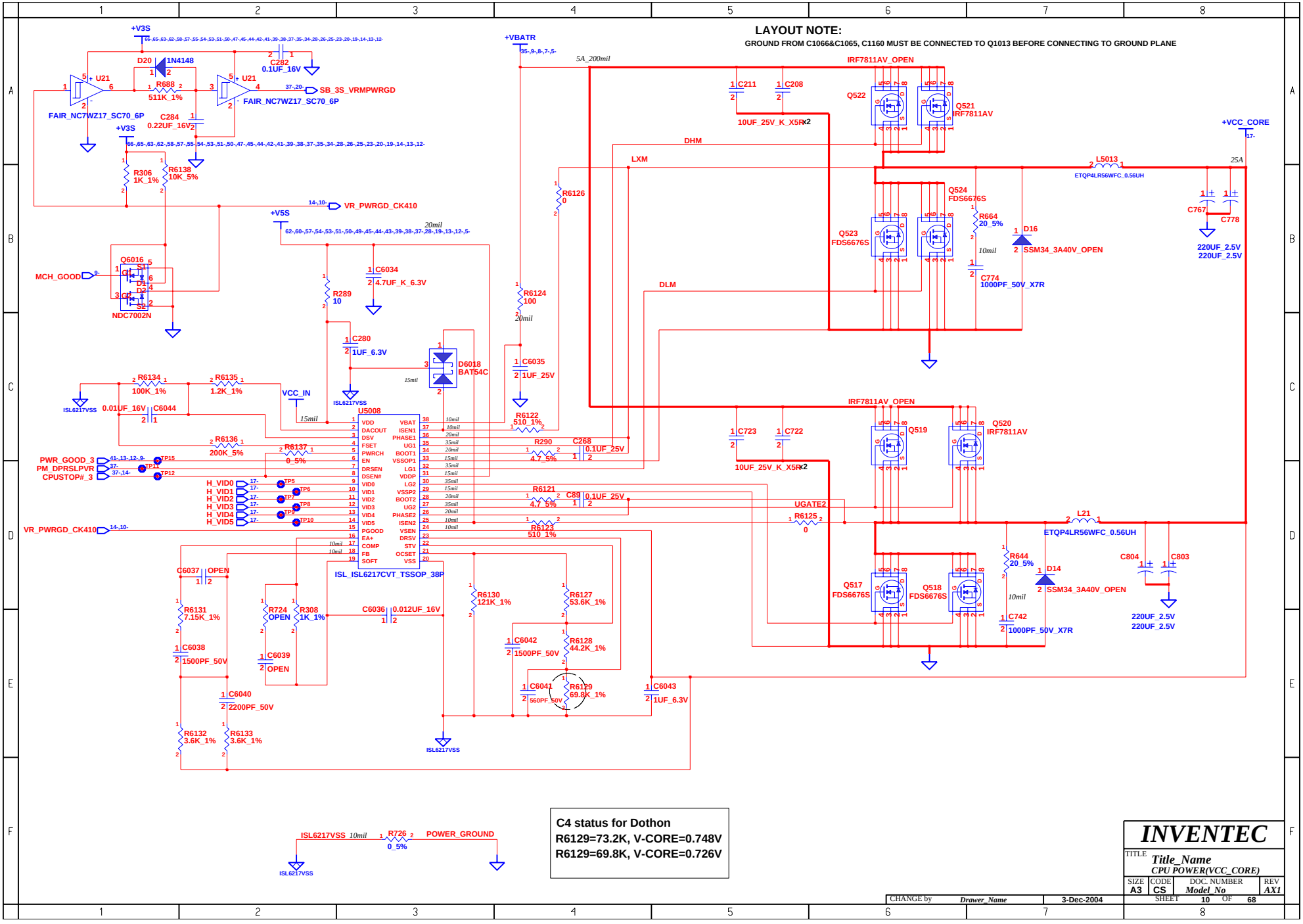
LAYOUT NOTE:
GROUND FROM C1066&C1065, C1160 MUST BE CONNECTED TO Q1013 BEFORE CONNECTING TO GROUND PLANE
+V3S
+VBATR
+VCC_CORE
+V5S
U21
FAIR_NC7WZ17_SC70_6P
D20
1N4148
R688
511K_1%
C282
0.1UF_16V
C284
0.22UF_16V
SB_3S_VRMPWRGD
R306
1K_1%
R6138
10K_5%
VR_PWRGD_CK410
MCH_GOOD
Q6016
NDC7002N
R289
10
C6034
4.7UF_K_6.3V
C280
1UF_6.3V
D6018
BAT54C
R6124
100
C6035
1UF_25V
R6126
0
5A_200mil
IRF7811AV_OPEN
C211
C208
10UF_25V_K_X5R
Q522
Q521
IRF7811AV
DHM
LXM
DLM
L5013
ETQP4LR56WFC_0.56UH
25A
Q524
FDS6676S
Q523
FDS6676S
R664
20_5%
D16
SSM34_3A40V_OPEN
C774
1000PF_50V_X7R
C767
C778
220UF_2.5V
220UF_2.5V
R6134
100K_1%
R6135
1.2K_1%
VCC_IN
ISL6217VSS
0.01UF_16V
C6044
U5008
ISL_ISL6217CVT_TSSOP_38P
R6136
200K_5%
R6137
0_5%
R6122
510_1%
R290
4.7_5%
C268
0.1UF_25V
PWR_GOOD_3
PM_DPRSLPVR
CPUSTOP#_3
H_VID0
H_VID1
H_VID2
H_VID3
H_VID4
H_VID5
R6121
4.7_5%
C89
0.1UF_25V
R6123
510_1%
UGATE2
R6125
0
C723
C722
Q519
Q520
IRF7811AV
L21
ETQP4LR56WFC_0.56UH
R644
20_5%
D14
SSM34_3A40V_OPEN
C742
1000PF_50V_X7R
C804
C803
Q517
FDS6676S
Q518
FDS6676S
C6037
OPEN
R6131
7.15K_1%
R724
OPEN
R308
1K_1%
C6036
0.012UF_16V
C6038
1500PF_50V
C6039
OPEN
C6040
2200PF_50V
R6132
3.6K_1%
R6133
3.6K_1%
R6130
121K_1%
R6127
53.6K_1%
C6042
1500PF_50V
R6128
44.2K_1%
C6041
560PF_50V
R6129
69.8K_1%
C6043
1UF_6.3V
ISL6217VSS
R726
0_5%
POWER_GROUND
C4 status for Dothon
R6129=73.2K, V-CORE=0.748V
R6129=69.8K, V-CORE=0.726V
INVENTEC
TITLE
Title_Name
CPU POWER(VCC_CORE)
SIZE A3
CODE CS
DOC. NUMBER Model_No
REV AX1
SHEET 10 OF 68
CHANGE by Drawer_Name
3-Dec-2004

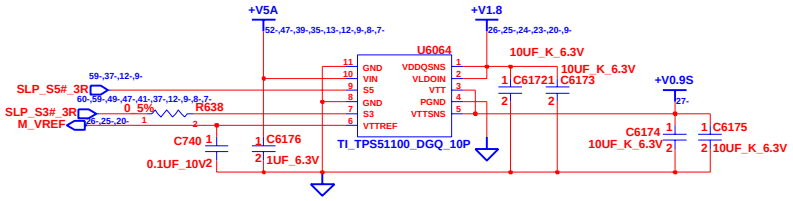

CHANGE by	*Drawer_Name*	28-Nov-2004	

INVENTEC

TITLE *Title_Name*
+V0.9S

SIZE	CODE	DOC. NUMBER	REV
A3	CS	*Model_No*	*AX1*

SHEET 11 OF 68

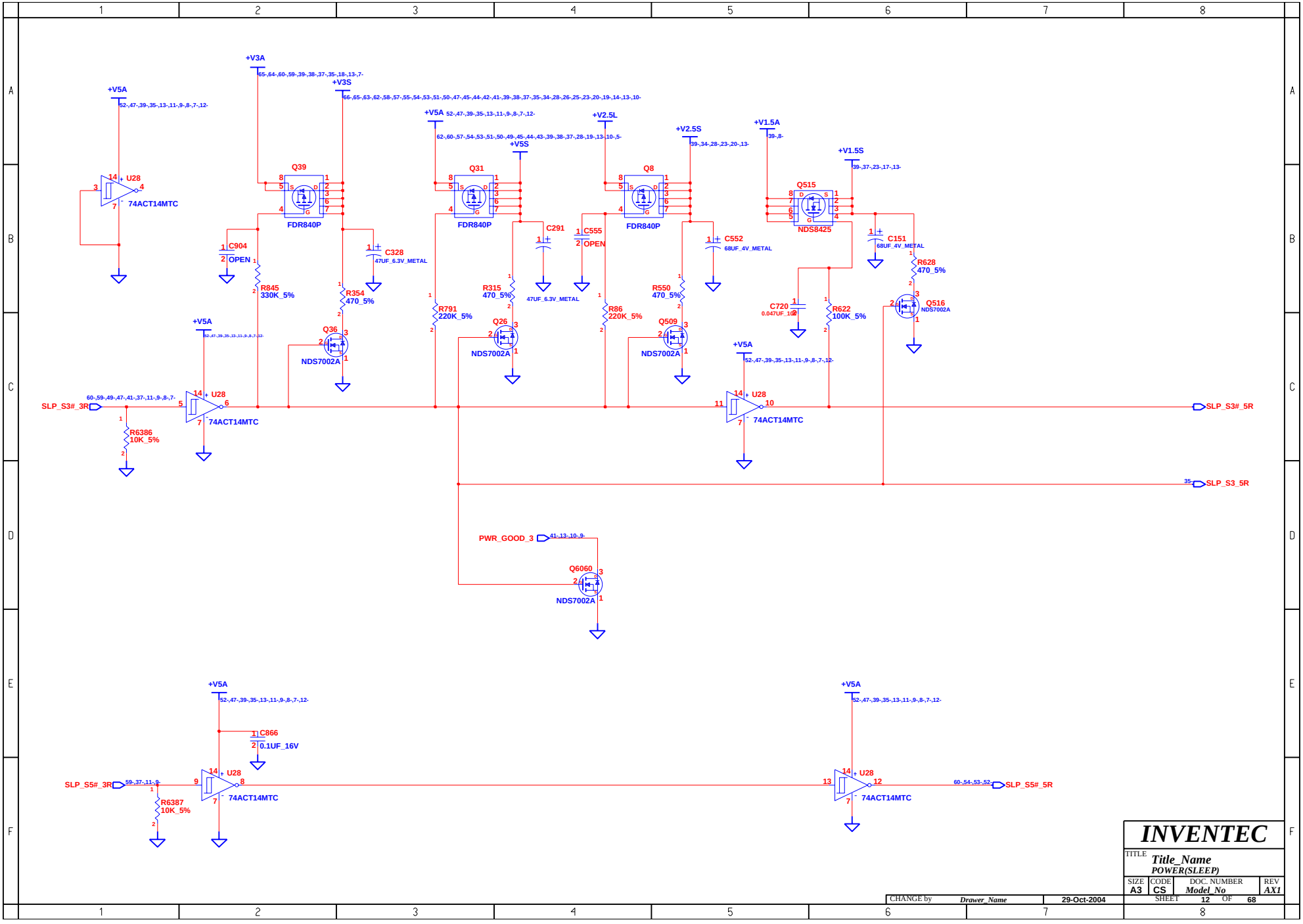

INVENTEC			
TITLE *Title_Name* *POWER(SLEEP)*			
SIZE A3	CODE CS	DOC. NUMBER *Model_No*	REV *AX1*
CHANGE by *Drawer_Name*	29-Oct-2004	SHEET 12 OF 68	

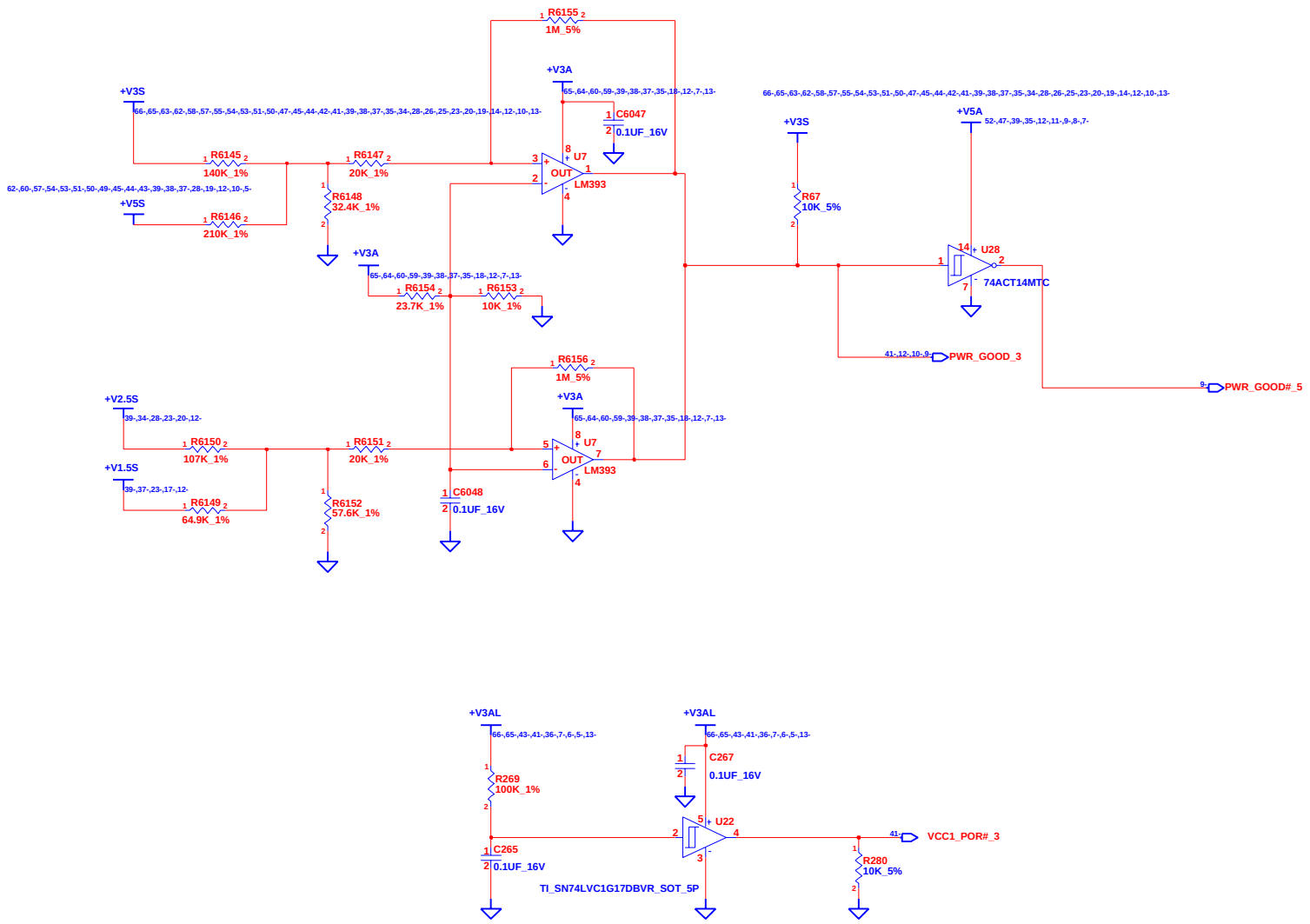

CHANGE by	Drawer_Name	10-Dec-2004	

INVENTEC

TITLE *Title_Name*
POWER(SEQUENCE)

SIZE	CODE	DOC. NUMBER	REV
A3	CS	*Model_No*	*AX1*

SHEET 13 OF 68

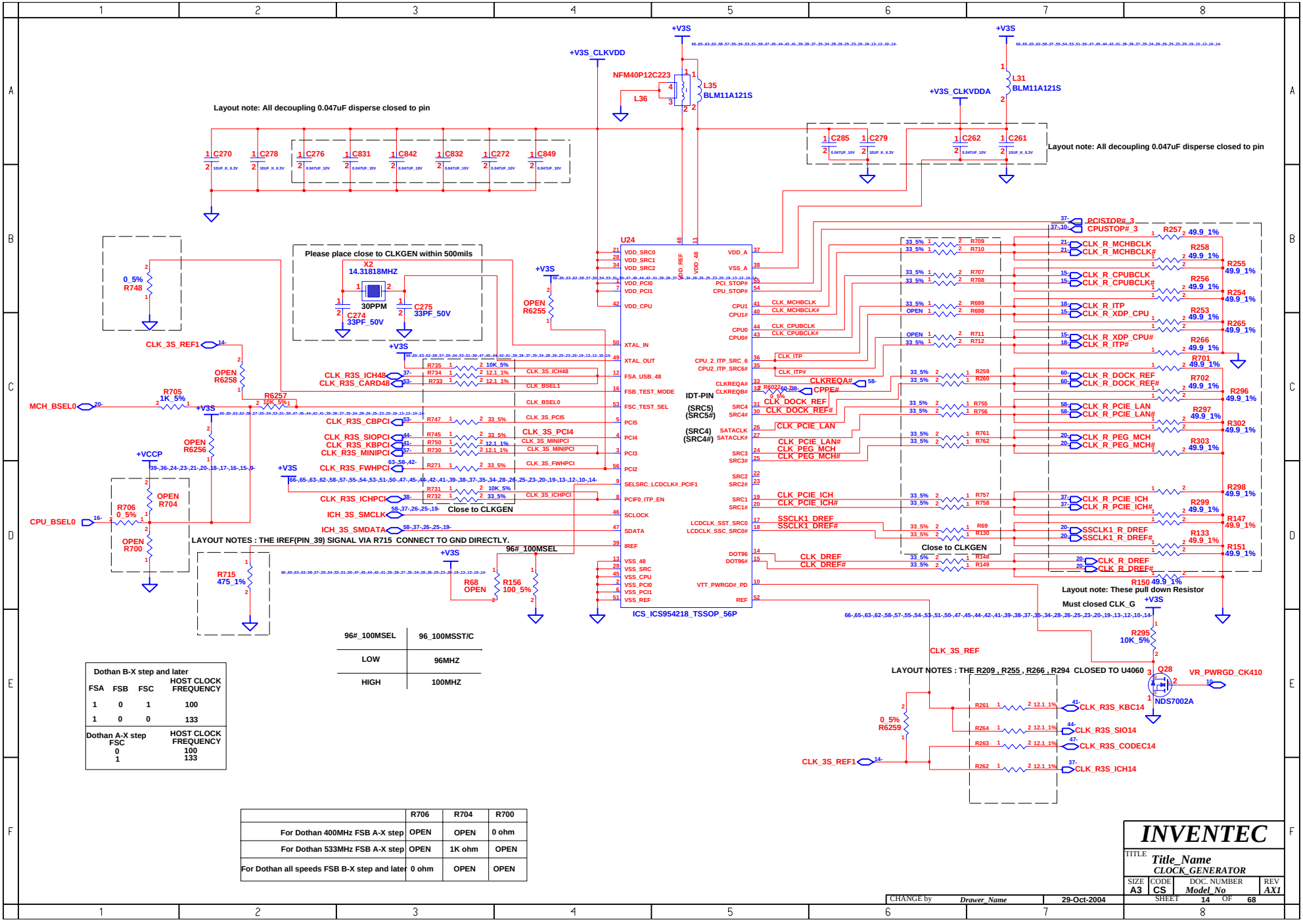

96#_100MSEL	96_100MSST/C
LOW	96MHZ
HIGH	100MHZ

Dothan B-X step and later

FSA	FSB	FSC	HOST CLOCK FREQUENCY
1	0	1	100
1	0	0	133

Dothan A-X step FSC	HOST CLOCK FREQUENCY
0	100
1	133

	R706	R704	R700
For Dothan 400MHz FSB A-X step	OPEN	OPEN	0 ohm
For Dothan 533MHz FSB A-X step	OPEN	1K ohm	OPEN
For Dothan all speeds FSB B-X step and later	0 ohm	OPEN	OPEN

INVENTEC

TITLE *Title_Name*
CLOCK_GENERATOR

SIZE	CODE	DOC. NUMBER	REV
A3	CS	*Model_No*	*AX1*

SHEET 14 OF 68

CHANGE by *Drawer_Name* 29-Oct-2004

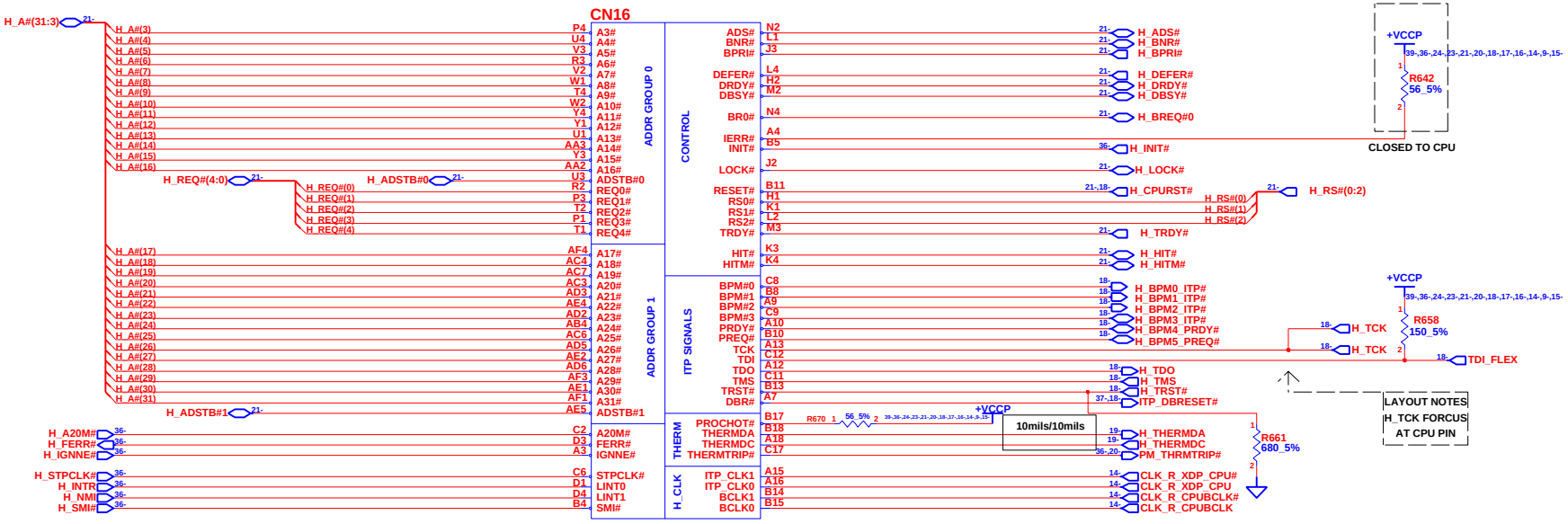

AMP_uFCPGA478M_478P_Dothan

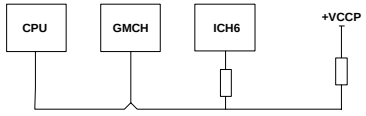

PM_THRMTRIP# should be without T at CPU

INVENTEC			
TITLE Title_Name DOTHAN-1			
SIZE A3	CODE CS	DOC. NUMBER Model_No	REV AX1
CHANGE by Drawer_Name	29-Oct-2004	SHEET 15 OF 68	

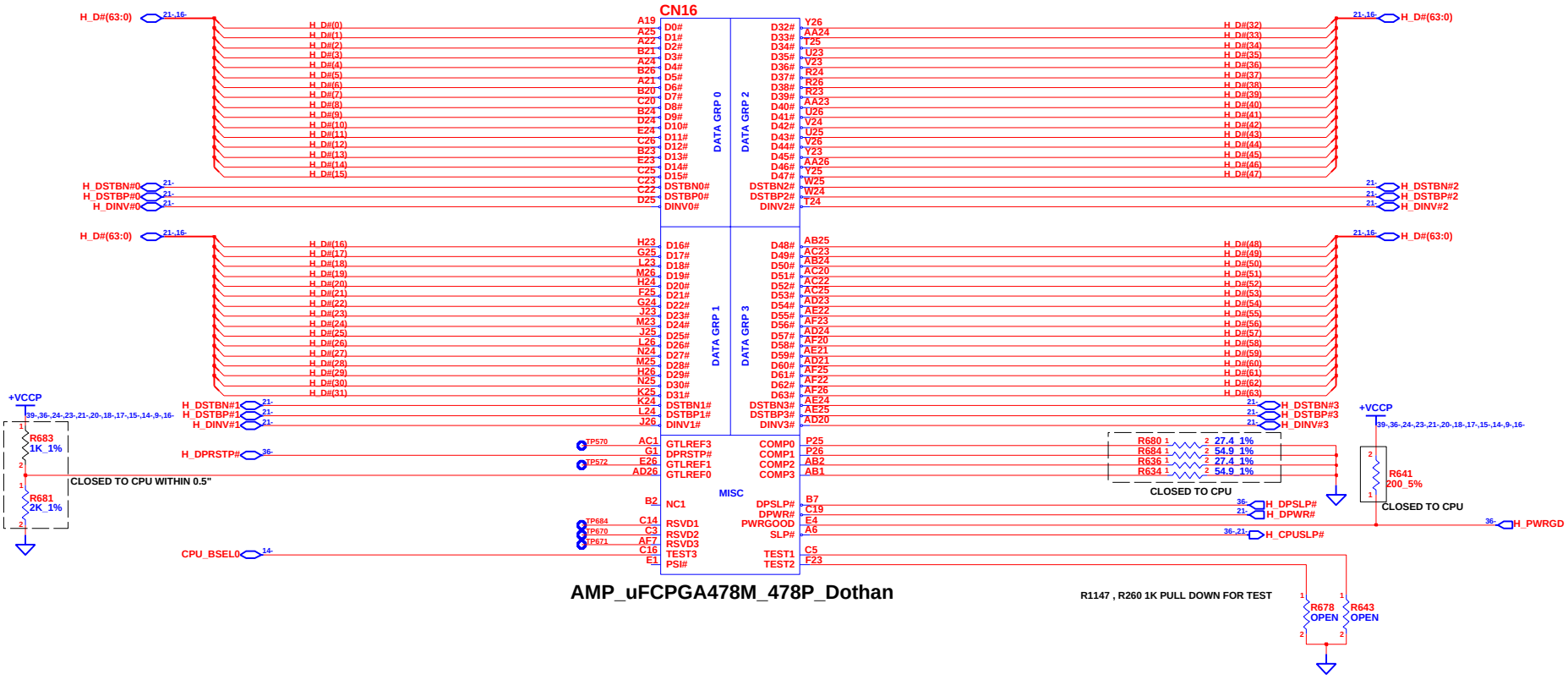

AMP_uFCPGA478M_478P_Dothan

INVENTEC			
TITLE: Title_Name DOTHAN-2			
SIZE: A3	CODE: CS	DOC. NUMBER: Model_No	REV: AX1
CHANGE by: Drawer_Name	10-Sep-2004	SHEET 16 OF 68	

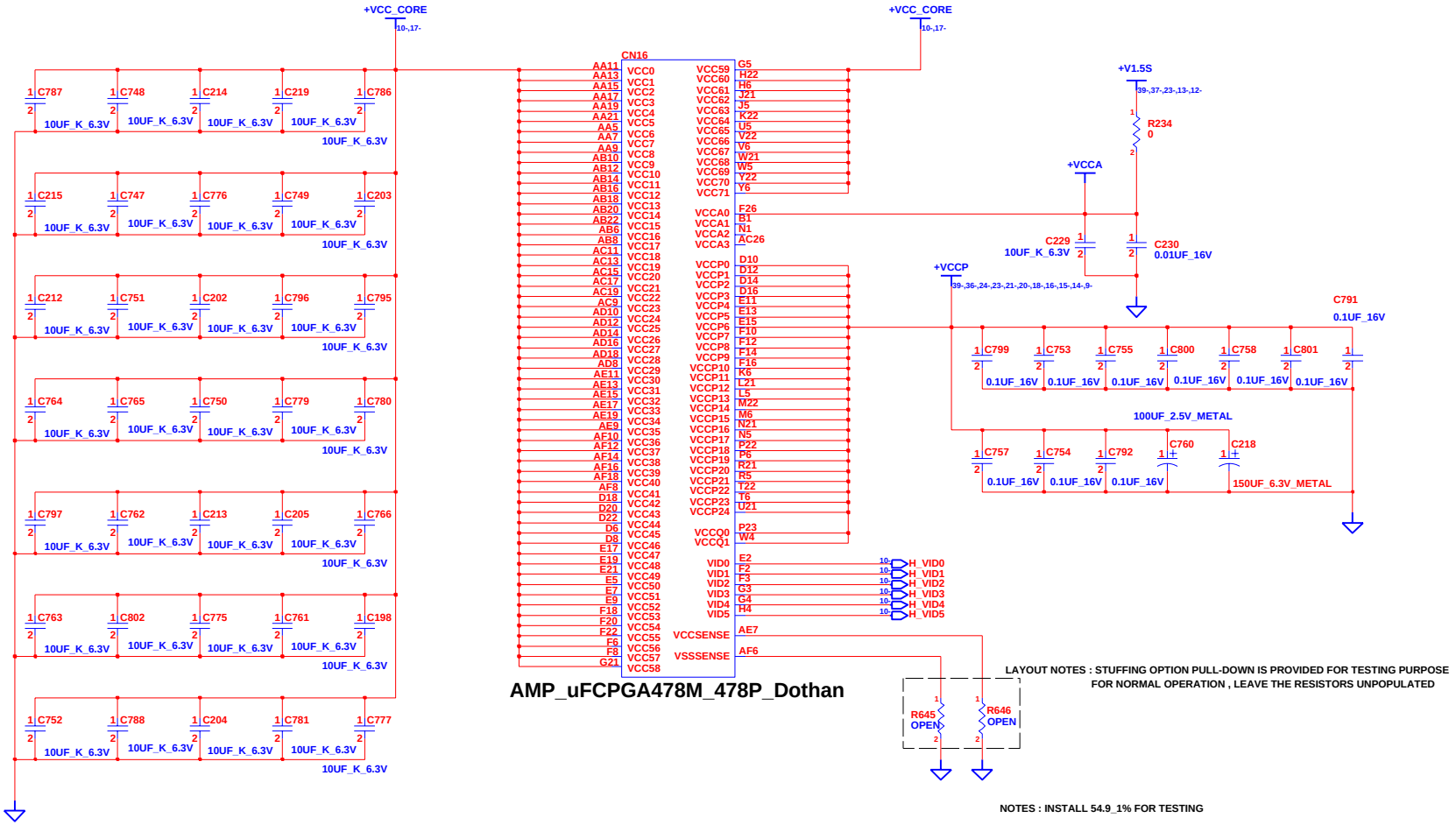

LAYOUT NOTES : STUFFING OPTION PULL-DOWN IS PROVIDED FOR TESTING PURPOSE FOR NORMAL OPERATION , LEAVE THE RESISTORS UNPOPULATED

NOTES : INSTALL 54.9_1% FOR TESTING

INVENTEC			
TITLE Title_Name DOTHAN-3			
SIZE A3	CODE CS	DOC. NUMBER Model_No	REV AX1
CHANGE by Drawer_Name	1-Sep-2004	SHEET 17 OF 68	

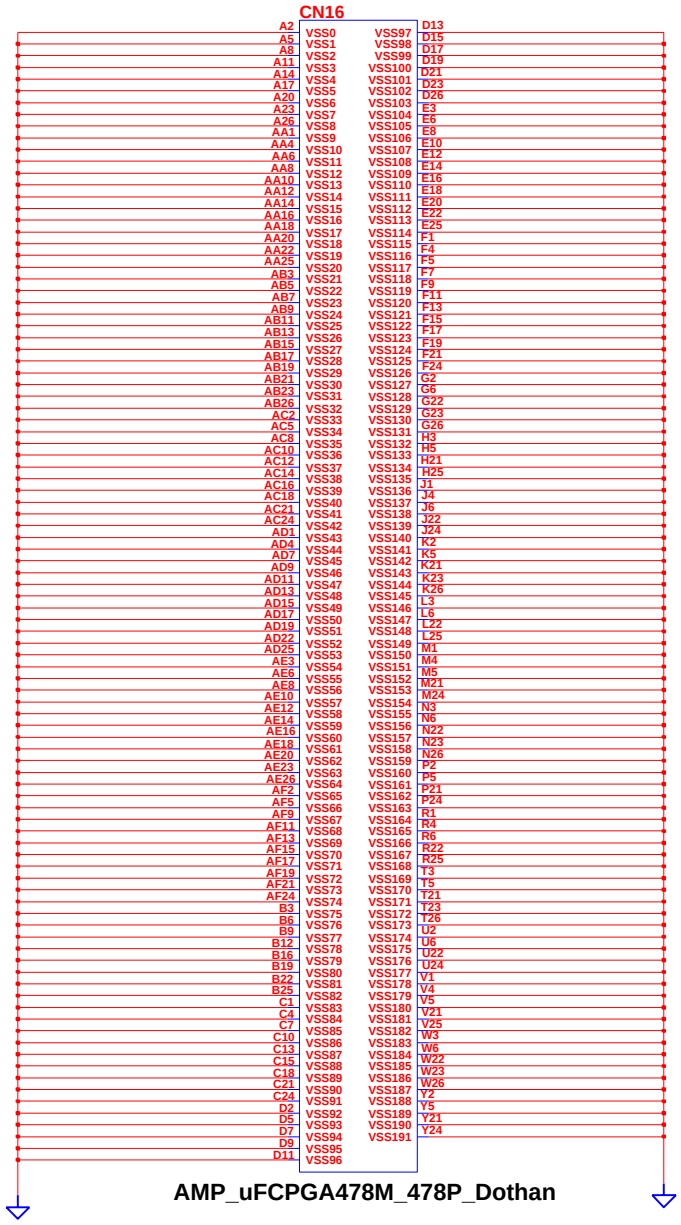

AMP_uFCPGA478M_478P_Dothan

SI2- CHANGE TO OPEN

In-Target Probe

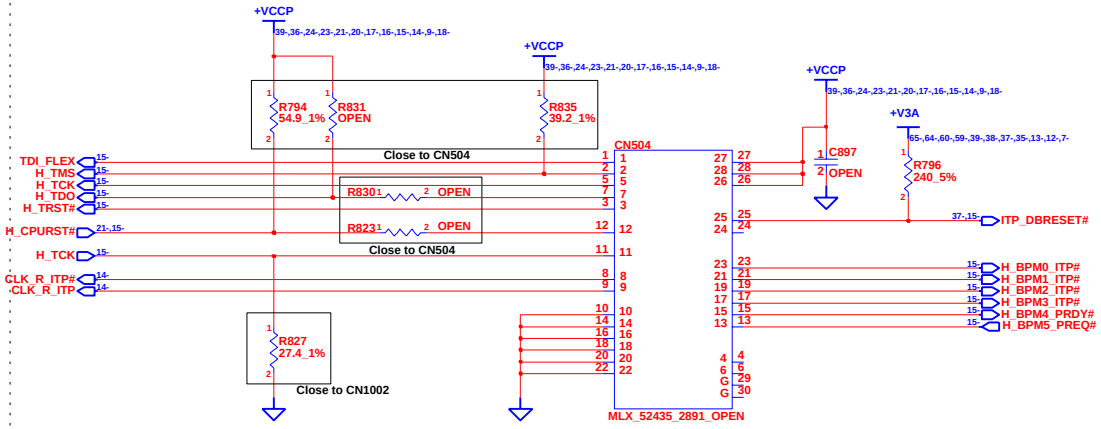

Resistor closed Within 2" of the CPU

LAYOUT NOTES : H_CPURST# PIN OF MCH_M FORK OUT INTO TWO BRANCHES ON CPU AND ITP CONNECTOR

CHANGE by	*Drawer_Name*	22-Sep-2004	

INVENTEC

TITLE *Title_Name*
DOTHAN-4

SIZE	CODE	DOC. NUMBER	REV
A3	CS	*Model_No*	*AX1*

SHEET 18 OF 68

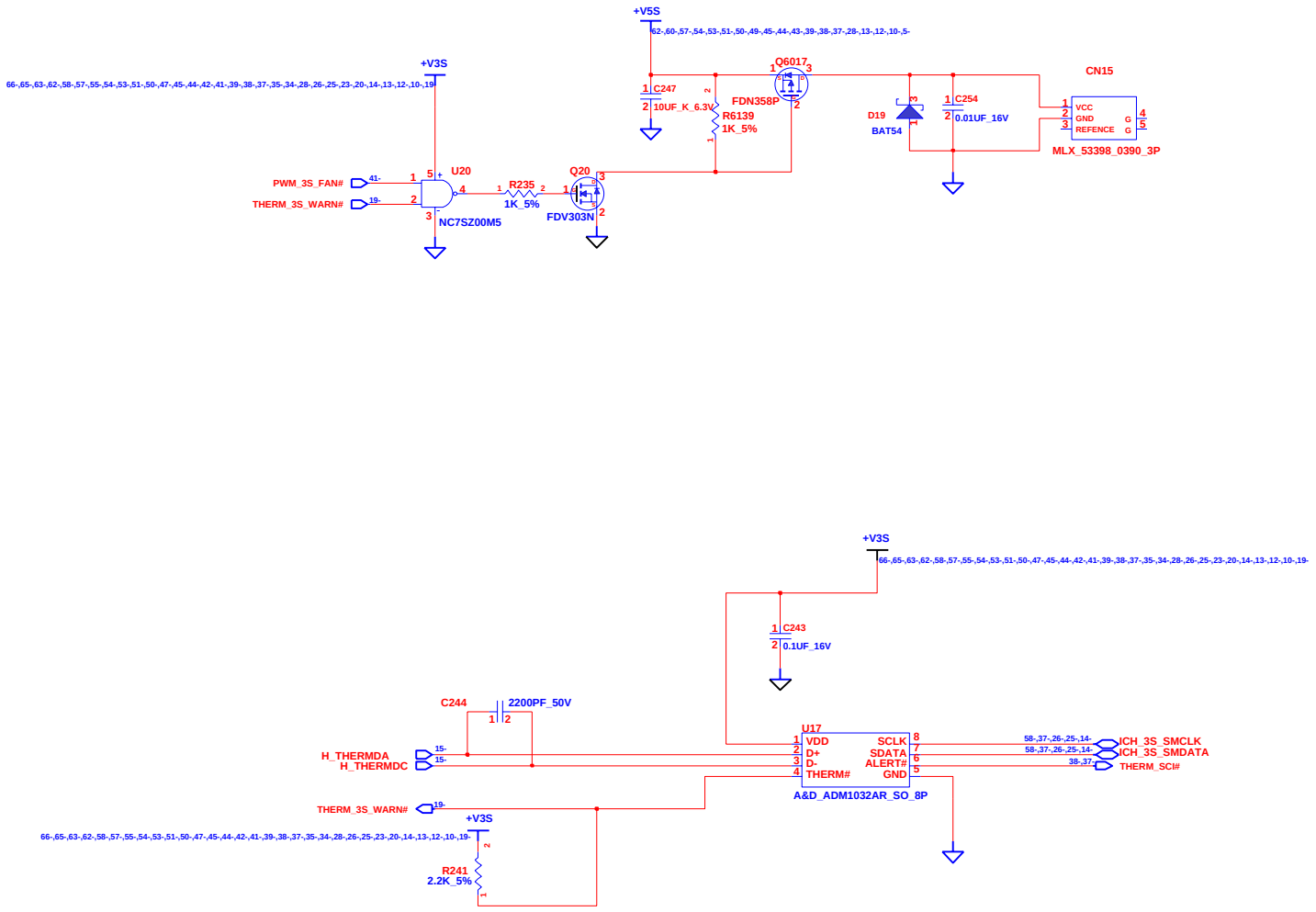

LAYOUT NOTES: PUT THE THERMAL SENSOR CLOSE TO CPU

INVENTEC			
TITLE	Title_Name THERMAL&FAN CONTROLLER		
SIZE A3	CODE CS	DOC. NUMBER Model_No	REV AX1
CHANGE by Drawer_Name	5-Nov-2004	SHEET 19 OF 68	

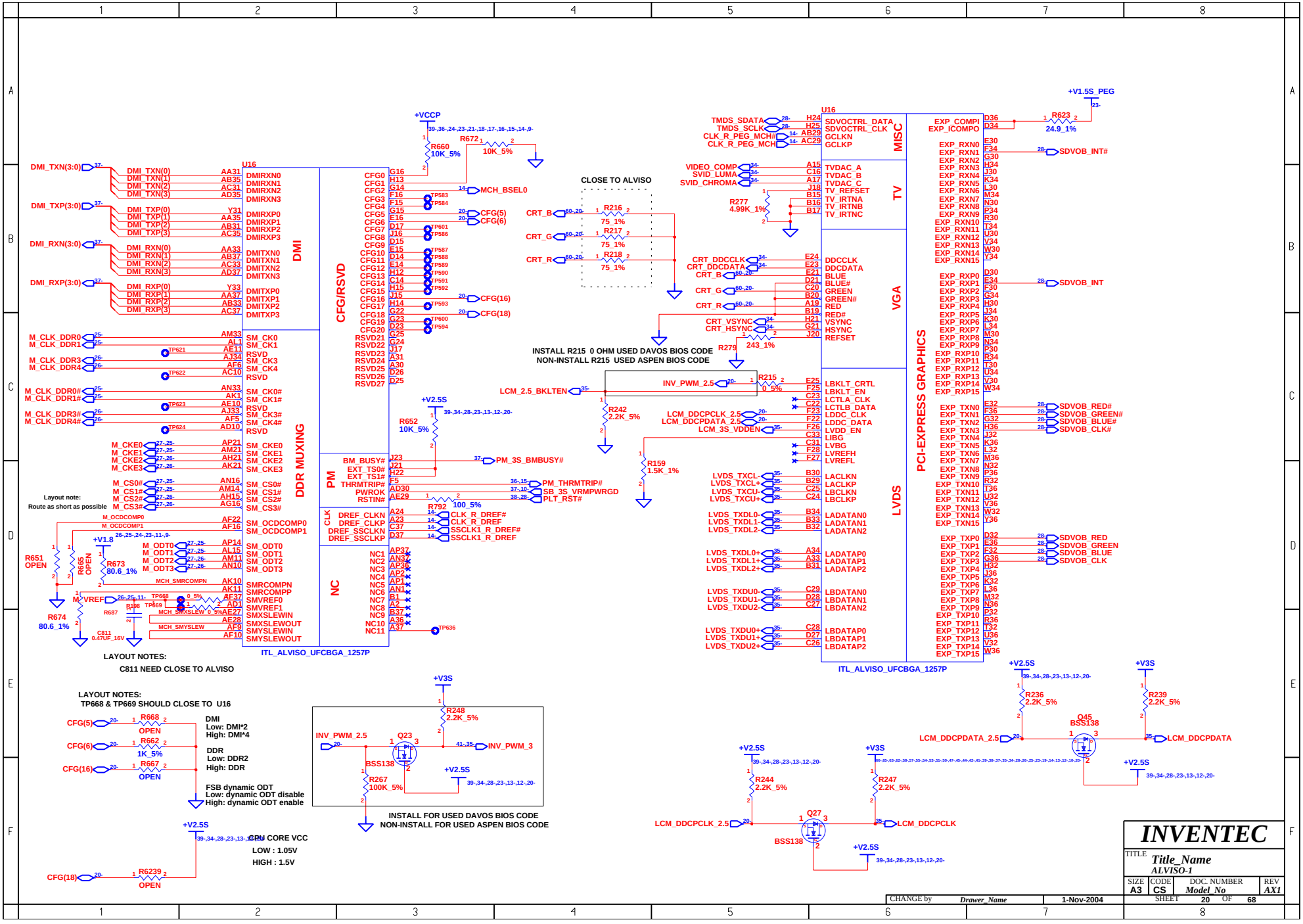
DDR MUXING
DMI
CFG/RSVD
PM
CLK
NC
ITL_ALVISO_UFCBGA_1257P
MISC
TV
VGA
LVDS
PCI-EXPRESS GRAPHICS
CLOSE TO ALVISO
INSTALL R215 0 OHM USED DAVOS BIOS CODE
NON-INSTALL R215 USED ASPEN BIOS CODE
LAYOUT NOTES:
C811 NEED CLOSE TO ALVISO
LAYOUT NOTES:
TP668 & TP669 SHOULD CLOSE TO U16
DMI
Low: DMI*2
High: DMI*4
DDR
Low: DDR2
High: DDR
FSB dynamic ODT
Low: dynamic ODT disable
High: dynamic ODT enable
CPU CORE VCC
LOW : 1.05V
HIGH : 1.5V
INSTALL FOR USED DAVOS BIOS CODE
NON-INSTALL FOR USED ASPEN BIOS CODE
INVENTEC
Title_Name
ALVISO-1
SIZE A3
CODE CS
DOC. NUMBER Model_No
REV AX1
SHEET 20 OF 68
CHANGE by Drawer_Name
1-Nov-2004

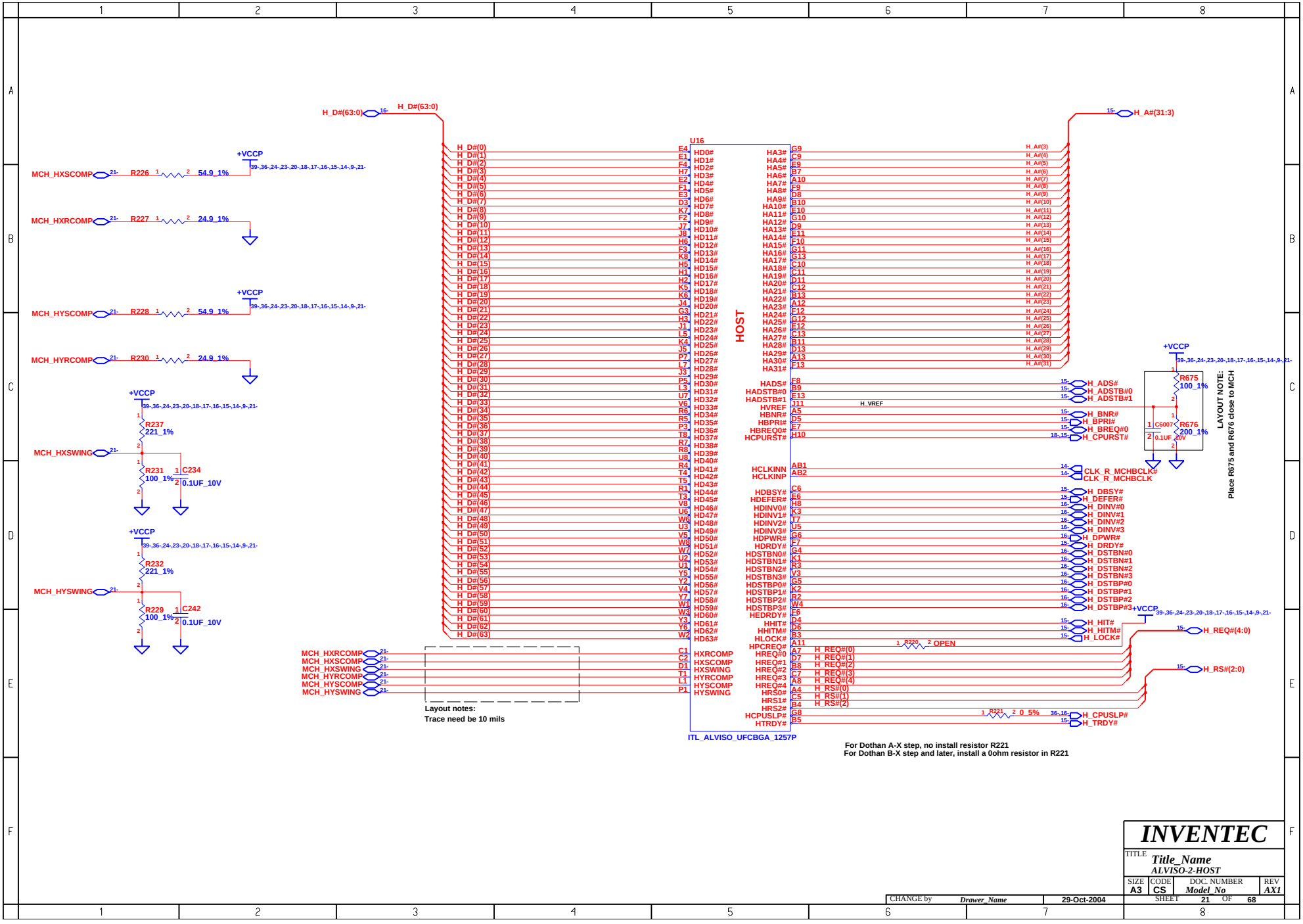
U16
HOST
ITL_ALVISO_UFCBGA_1257P
H_D#(63:0)
H_A#(31:3)
MCH_HXSCOMP
MCH_HXRCOMP
MCH_HYSCOMP
MCH_HYRCOMP
MCH_HXSWING
MCH_HYSWING
R226 54.9_1%
R227 24.9_1%
R228 54.9_1%
R230 24.9_1%
R237 221_1%
R231 100_1%
C234 0.1UF_10V
R232 221_1%
R229 100_1%
C242 0.1UF_10V
+VCCP
R675 100_1%
R676 200_1%
C6007 0.1UF_20V
LAYOUT NOTE:
Place R675 and R676 close to MCH
H_ADS#
H_ADSTB#0
H_ADSTB#1
H_BNR#
H_BPRI#
H_BREQ#0
H_CPURST#
CLK_R_MCHBCLK#
CLK_R_MCHBCLK
H_DBSY#
H_DEFER#
H_DINV#0
H_DINV#1
H_DINV#2
H_DINV#3
H_DPWR#
H_DRDY#
H_DSTBN#0
H_DSTBN#1
H_DSTBN#2
H_DSTBN#3
H_DSTBP#0
H_DSTBP#1
H_DSTBP#2
H_DSTBP#3
H_HIT#
H_HITM#
H_LOCK#
H_REQ#(4:0)
H_RS#(2:0)
H_CPUSLP#
H_TRDY#
R220 OPEN
R221 0_5%
H_VREF
MCH_HXRCOMP
MCH_HXSCOMP
MCH_HXSWING
MCH_HYRCOMP
MCH_HYSCOMP
MCH_HYSWING
Layout notes:
Trace need be 10 mils
For Dothan A-X step, no install resistor R221
For Dothan B-X step and later, install a 0ohm resistor in R221
INVENTEC
TITLE
Title_Name
ALVISO-2-HOST
SIZE A3
CODE CS
DOC. NUMBER Model_No
REV AX1
SHEET 21 OF 68
CHANGE by Drawer_Name
29-Oct-2004

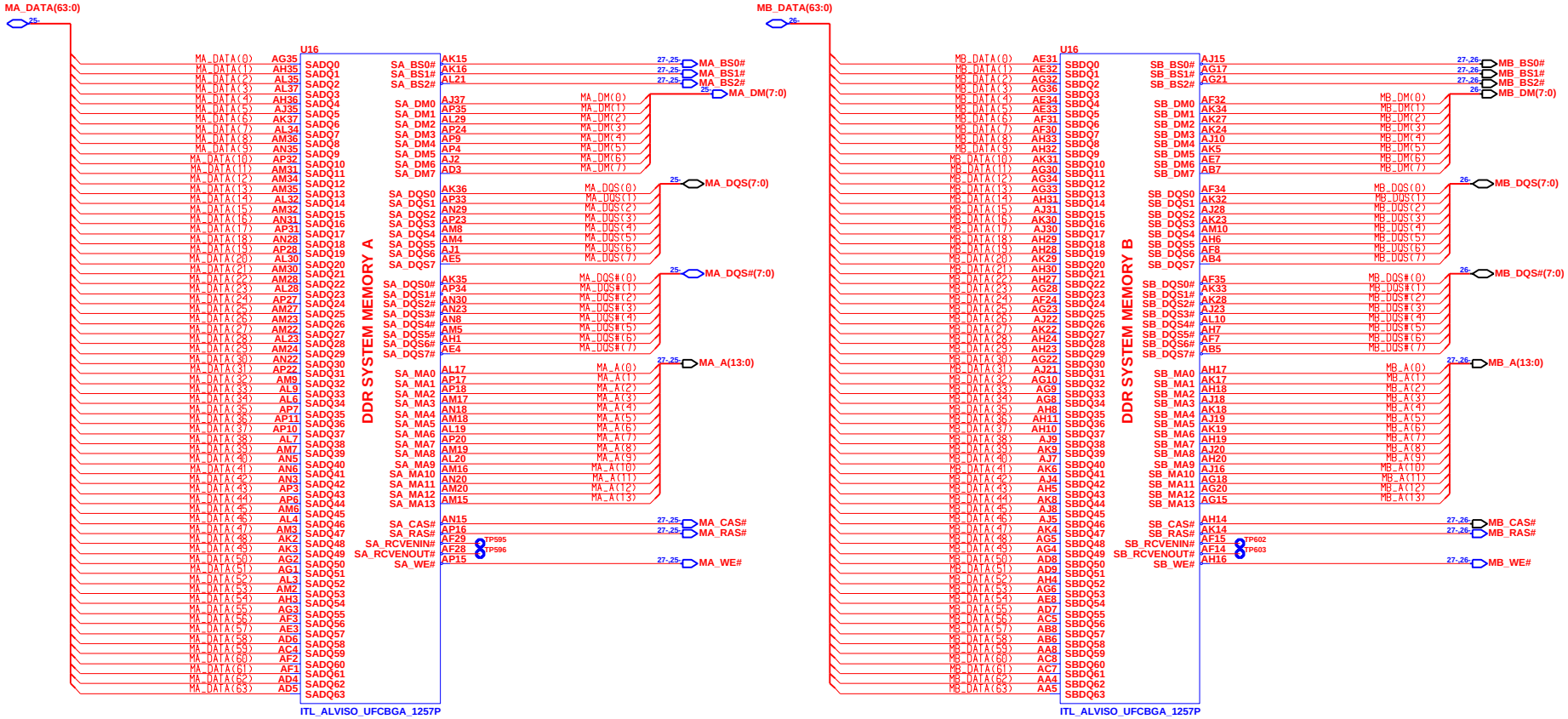

CHANGE by	Drawer_Name	1-Sep-2004	

INVENTEC

TITLE *Title_Name*
ALVISO-3-DDR2

SIZE	CODE	DOC. NUMBER	REV
A3	CS	*Model_No*	*AX1*

SHEET 22 OF 68

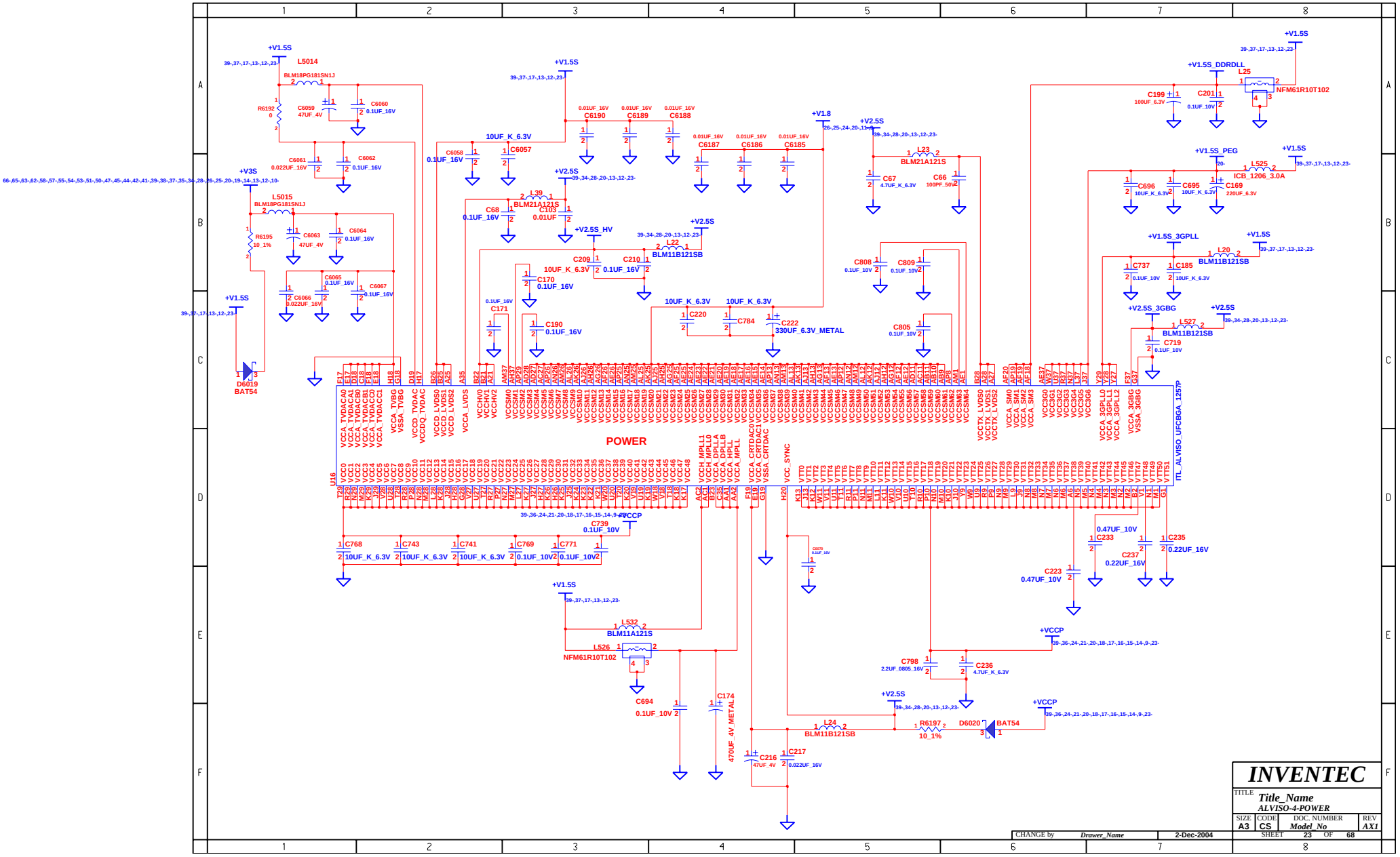
POWER
U16
ITL_ALVISO_UFCBGA_1257P
+V1.5S
+V3S
+V2.5S
+V2.5S_HV
+V1.8
+V1.5S_DDRDLL
+V1.5S_PEG
+V1.5S_3GPLL
+V2.5S_3GBG
+VCCP
L5014
BLM18PG181SN1J
L5015
BLM18PG181SN1J
R6192
R6195
10_1%
D6019
BAT54
L25
NFM61R10T102
L525
ICB_1206_3.0A
L20
BLM11B121SB
L527
BLM11B121SB
L23
BLM21A121S
L39
BLM21A121S
L22
BLM11B121SB
L532
BLM11A121S
L526
NFM61R10T102
L24
BLM11B121SB
R6197
10_1%
D6020
BAT54
C6190
C6189
C6188
C6187
C6186
C6185
C6057
10UF_K_6.3V
C6058
0.1UF_16V
C6059
47UF_4V
C6060
0.1UF_16V
C6061
0.022UF_16V
C6062
0.1UF_16V
C6063
47UF_4V
C6064
0.1UF_16V
C6065
0.1UF_16V
C6066
0.022UF_16V
C6067
0.1UF_16V
C68
0.1UF_16V
C103
0.01UF
C209
10UF_K_6.3V
C210
0.1UF_16V
C170
0.1UF_16V
C171
0.1UF_16V
C190
0.1UF_16V
C220
10UF_K_6.3V
C784
10UF_K_6.3V
C222
330UF_6.3V_METAL
C67
4.7UF_K_6.3V
C66
100PF_50V
C808
0.1UF_10V
C809
0.1UF_10V
C805
0.1UF_10V
C199
100UF_6.3V
C201
0.1UF_10V
C696
10UF_K_6.3V
C695
10UF_K_6.3V
C169
220UF_6.3V
C737
0.1UF_10V
C185
10UF_K_6.3V
C719
0.1UF_10V
C768
10UF_K_6.3V
C743
10UF_K_6.3V
C741
10UF_K_6.3V
C769
0.1UF_10V
C771
0.1UF_10V
C739
0.1UF_10V
C233
0.47UF_10V
C237
0.22UF_16V
C235
0.22UF_16V
C223
0.47UF_10V
C798
2.2UF_0805_16V
C236
4.7UF_K_6.3V
C694
0.1UF_10V
C174
470UF_4V_METAL
C216
47UF_4V
C217
0.022UF_16V
C6870
0.1UF_16V
INVENTEC
TITLE
Title_Name
ALVISO-4-POWER
SIZE A3
CODE CS
DOC. NUMBER Model_No
REV AX1
SHEET 23 OF 68
CHANGE by Drawer_Name
2-Dec-2004

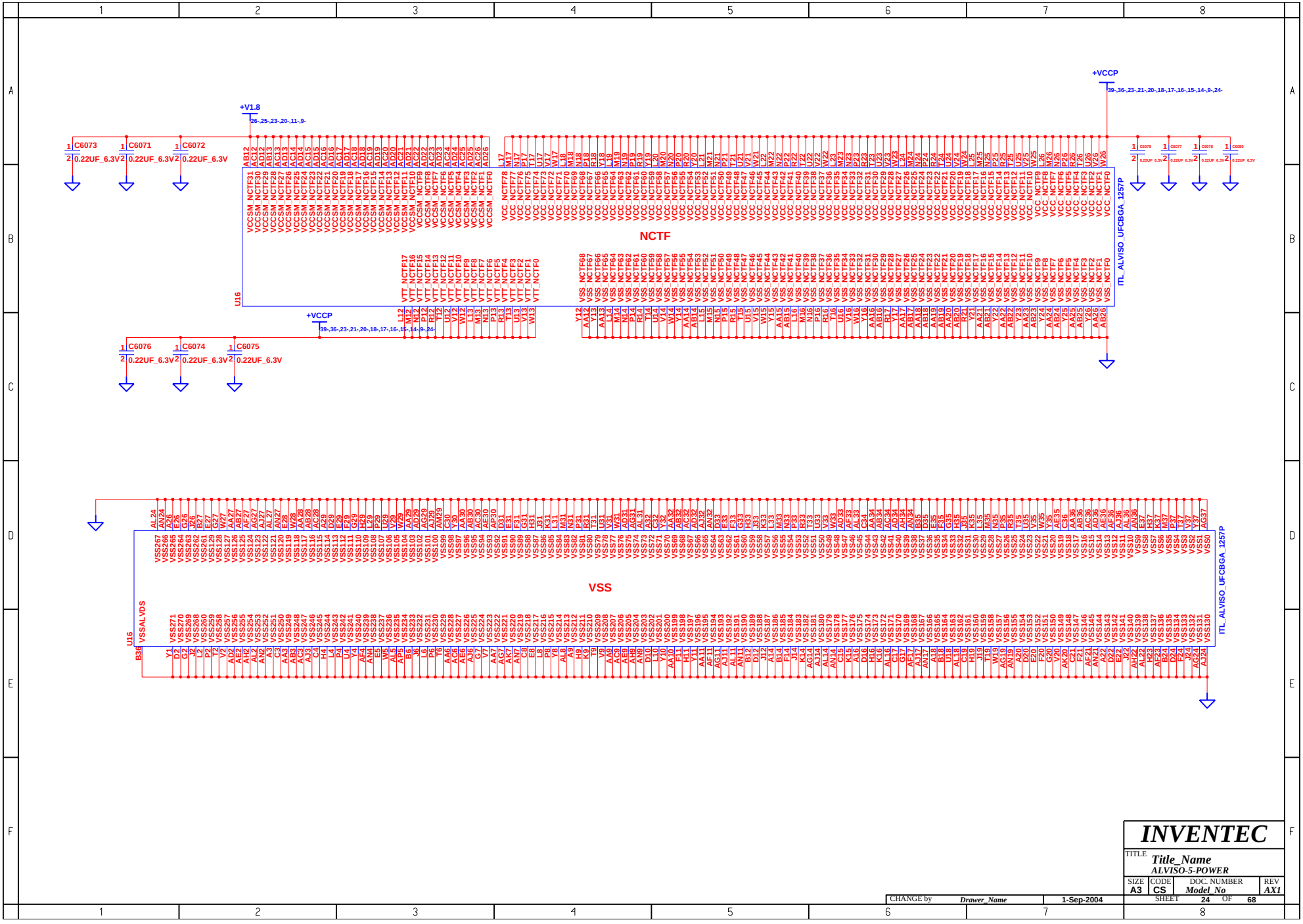
+V1.8
+VCCP
C6073
C6071
C6072
C6076
C6074
C6075
0.22UF_6.3V
U16
NCTF
VSS
ITL_ALVISO_UFCBGA_1257P
VSSALVDS
INVENTEC
TITLE
Title_Name
ALVISO-5-POWER
SIZE
A3
CODE
CS
DOC. NUMBER
Model_No
REV
AX1
SHEET
24
OF
68
CHANGE by
Drawer_Name
1-Sep-2004

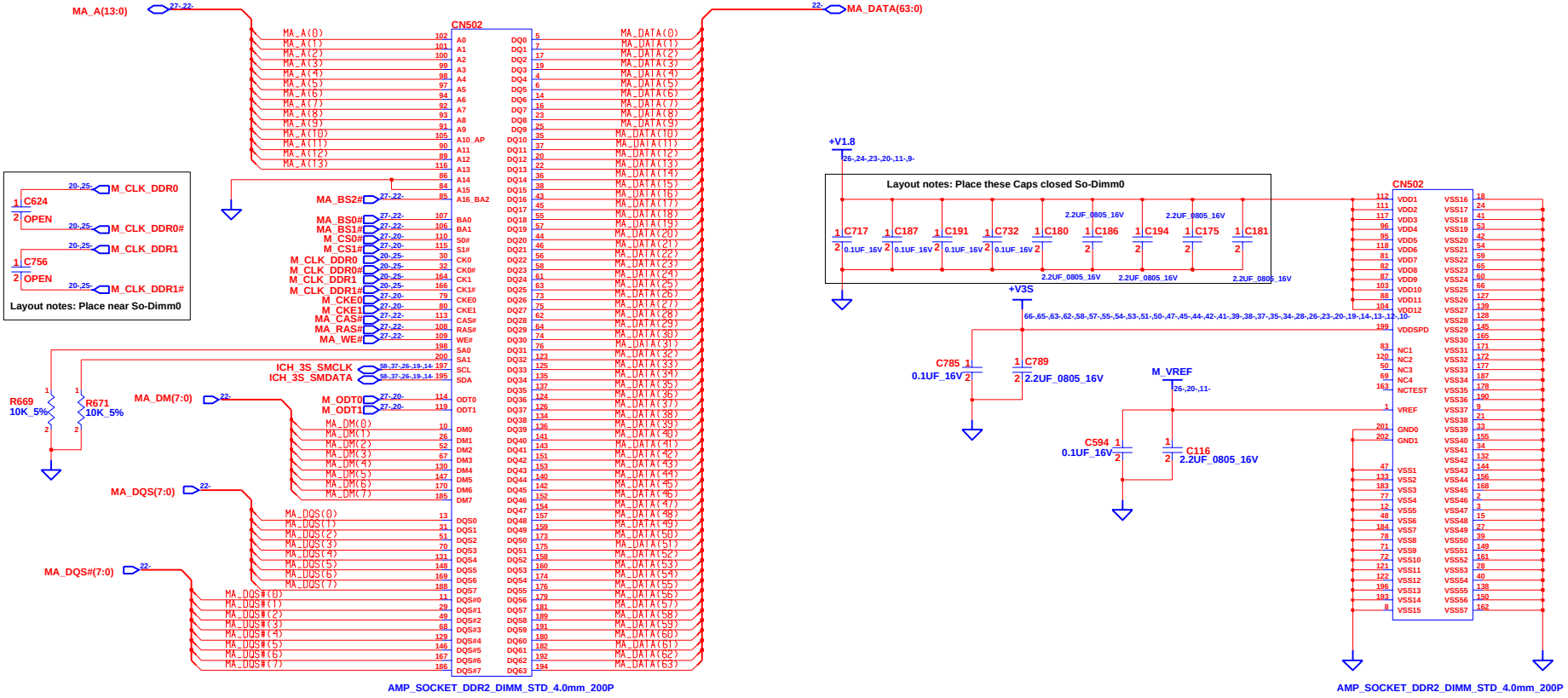

SO DIMM0_4mm

INVENTEC			
TITLE Title_Name DDR2-DIMM-0			
SIZE A3	CODE CS	DOC. NUMBER Model_No	REV AX1
CHANGE by Drawer_Name	29-Oct-2004	SHEET 25 OF 68	

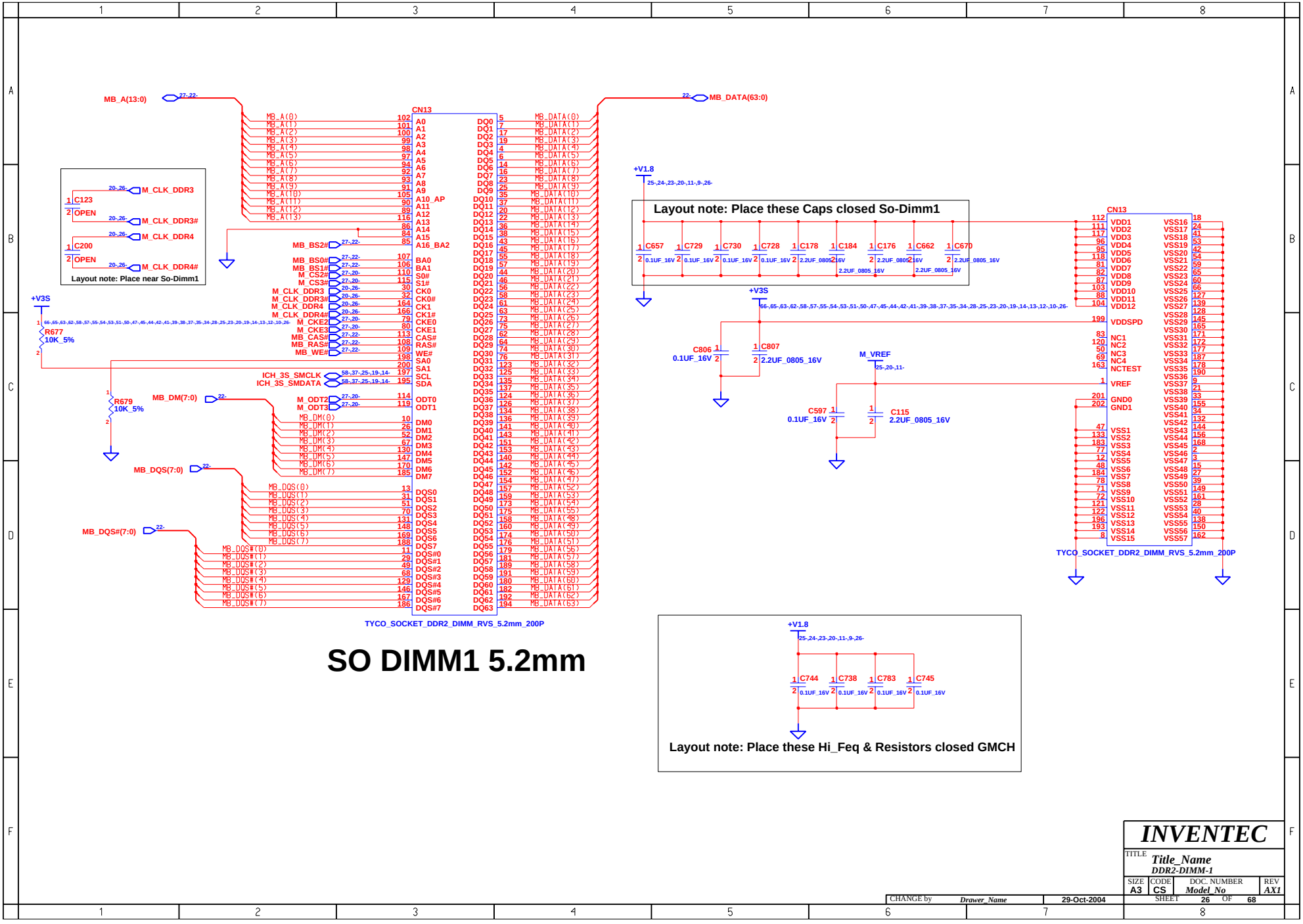

SO DIMM1 5.2mm

INVENTEC

TITLE Title_Name
DDR2-DIMM-1

SIZE	CODE	DOC. NUMBER	REV
A3	CS	Model_No	AX1

CHANGE by Drawer_Name 29-Oct-2004

SHEET 26 OF 68

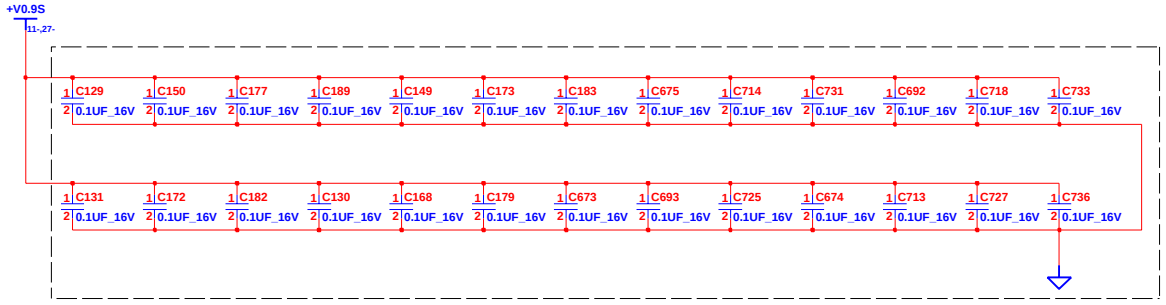

LAYOUT NOTES : PLACE ONE CAP CLOSE TO EVERY 2 PULL UP RESISTOR TERMINATED TO +V0.9S

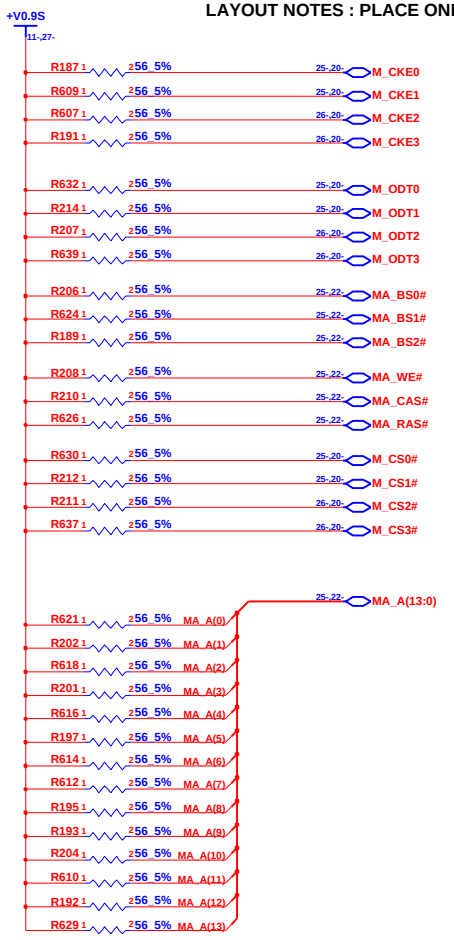

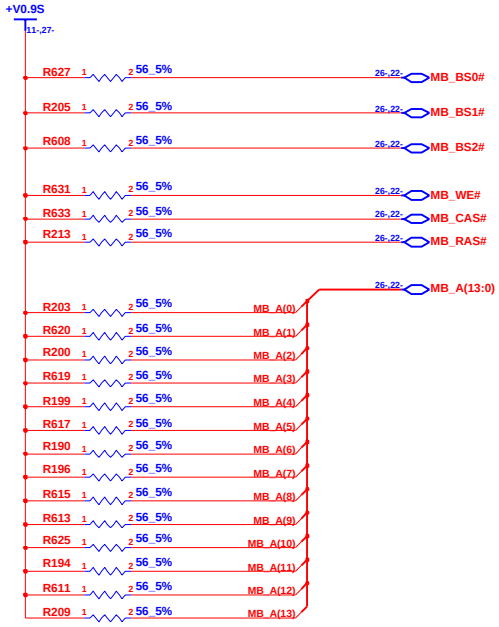

CHANGE by	*Drawer_Name*	1-Sep-2004	

INVENTEC

TITLE *Title_Name*
DDR2-DAMPING

SIZE	CODE	DOC. NUMBER	REV
A3	CS	*Model_No*	*AX1*

SHEET 27 OF 68

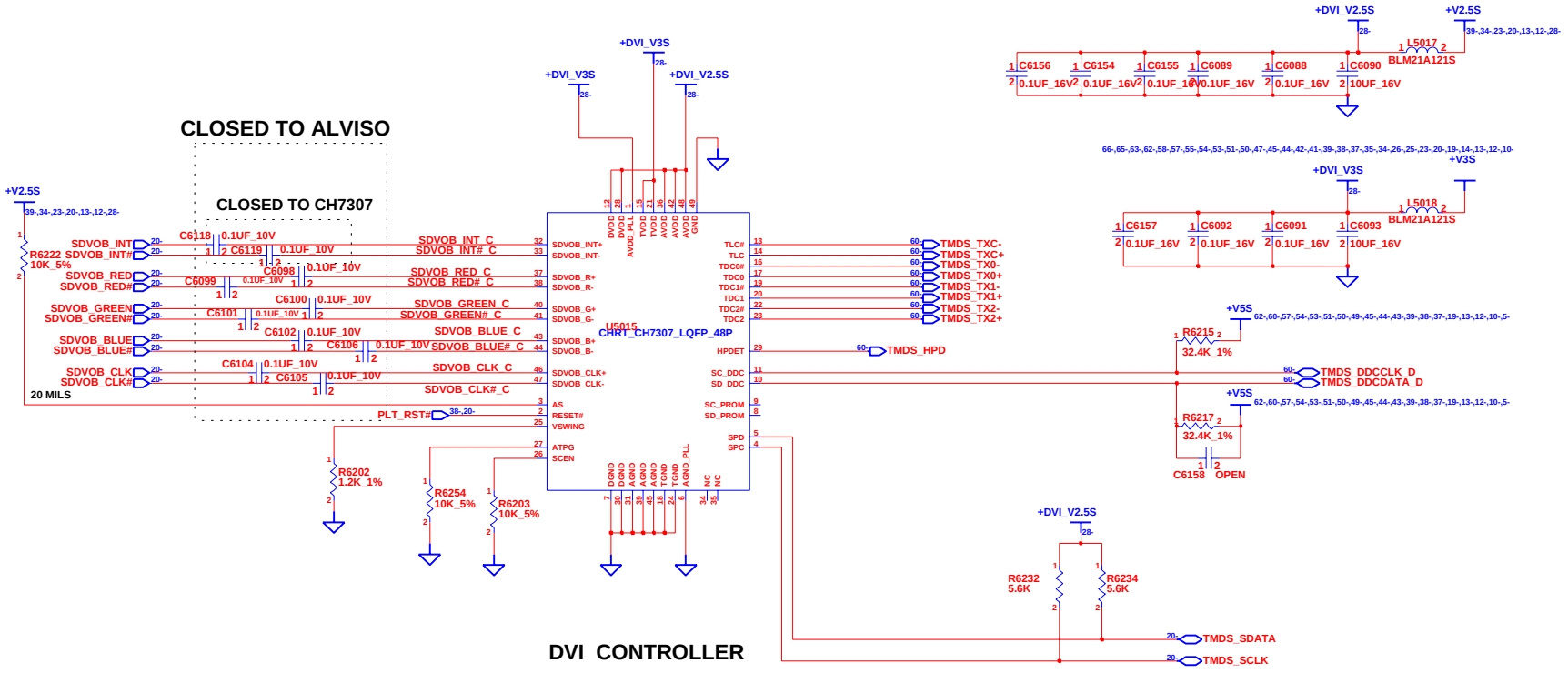

DVI CONTROLLER

INVENTEC			
TITLE	Title_Name DVI-CONTROL		
SIZE A3	CODE CS	DOC. NUMBER Model_No	REV AX1
CHANGE by Drawer_Name	29-Oct-2004	SHEET 28 OF 68	

BLANK

INVENTEC				
TITLE Title_Name ATI-M24-P-3				
SIZE A3	CODE CS	DOC. NUMBER Model_No		REV AX1
CHANGE by Drawer_Name	1-Sep-2004	SHEET 29 OF 68		

BLANK

INVENTEC				
TITLE Title_Name ATI-M24-P-4				
SIZE A3	CODE CS	DOC. NUMBER Model_No		REV AX1
CHANGE by Drawer_Name	1-Sep-2004	SHEET 30 OF 68		

BLANK

INVENTEC					
TITLE	Title_Name VGA DAMPING RESISTOR				
SIZE	CODE	DOC. NUMBER			REV
A3	CS	Model_No			AX1
CHANGE by	Drawer_Name	27-Sep-2003	SHEET	31 OF 68	

BLANK

INVENTEC			
TITLE Title_Name BLANK			
SIZE A3	CODE CS	DOC. NUMBER Model_No	REV AX1
CHANGE by Drawer_Name	1-Sep-2004	SHEET 32 OF 68	

BLANK

CHANGE by	Drawer_Name	1-Sep-2004			

INVENTEC

TITLE *Title_Name*
VIDEO RAM-2

SIZE	CODE	DOC. NUMBER	REV
A3	CS	*Model_No*	*AX1*

SHEET 33 OF 68

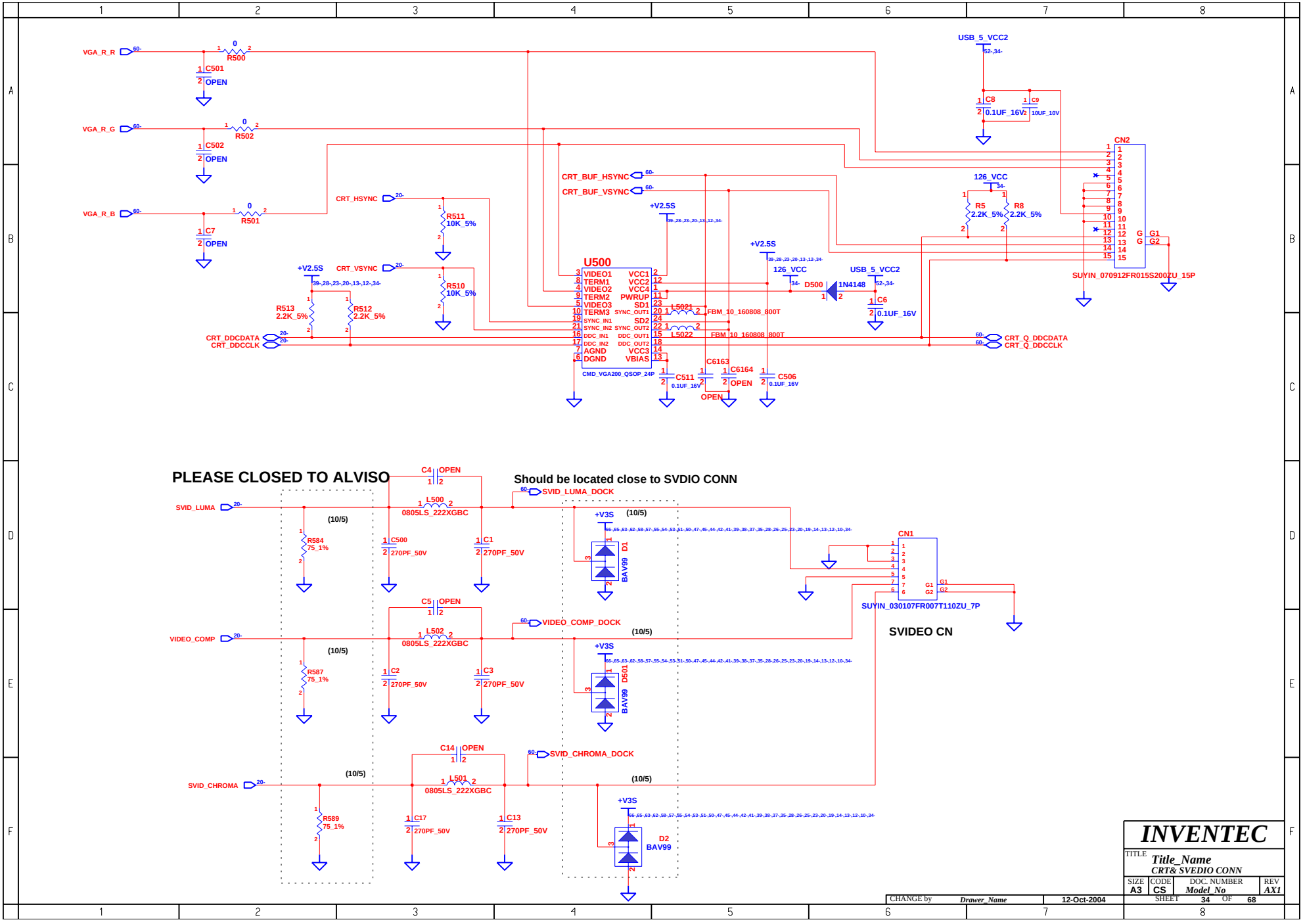
VGA_R_R
VGA_R_G
VGA_R_B
R500
R502
R501
C501
C502
C7
OPEN
CRT_HSYNC
CRT_VSYNC
R511
10K_5%
R510
10K_5%
+V2.5S
R513
2.2K_5%
R512
2.2K_5%
CRT_DDCDATA
CRT_DDCCLK
U500
VIDEO1
TERM1
VIDEO2
TERM2
VIDEO3
TERM3
SYNC_IN1
SYNC_IN2
DDC_IN1
DDC_IN2
AGND
DGND
VCC1
VCC2
VCC4
PWRUP
SD1
SYNC_OUT1
SD2
SYNC_OUT2
DDC_OUT1
DDC_OUT2
VCC3
VBIAS
CMD_VGA200_QSOP_24P
CRT_BUF_HSYNC
CRT_BUF_VSYNC
L5021
L5022
FBM_10_160808_800T
C511
0.1UF_16V
C6163
C6164
OPEN
C506
0.1UF_16V
126_VCC
D500
1N4148
USB_5_VCC2
C6
0.1UF_16V
CRT_Q_DDCDATA
CRT_Q_DDCCLK
C8
0.1UF_16V
C9
10UF_10V
R5
2.2K_5%
R8
2.2K_5%
CN2
SUYIN_070912FR015S200ZU_15P
PLEASE CLOSED TO ALVISO
Should be located close to SVDIO CONN
SVID_LUMA
SVID_LUMA_DOCK
C4
OPEN
L500
0805LS_222XGBC
R584
75_1%
C500
270PF_50V
C1
270PF_50V
+V3S
D1
BAV99
VIDEO_COMP
VIDEO_COMP_DOCK
C5
OPEN
L502
0805LS_222XGBC
R587
75_1%
C2
270PF_50V
C3
270PF_50V
D501
BAV99
SVID_CHROMA
SVID_CHROMA_DOCK
C14
OPEN
L501
0805LS_222XGBC
R589
75_1%
C17
270PF_50V
C13
270PF_50V
D2
BAV99
(10/5)
CN1
SUYIN_030107FR007T110ZU_7P
SVIDEO CN
INVENTEC
TITLE
Title_Name
CRT& SVEDIO CONN
SIZE A3
CODE CS
DOC. NUMBER Model_No
REV AX1
SHEET 34 OF 68
CHANGE by Drawer_Name
12-Oct-2004

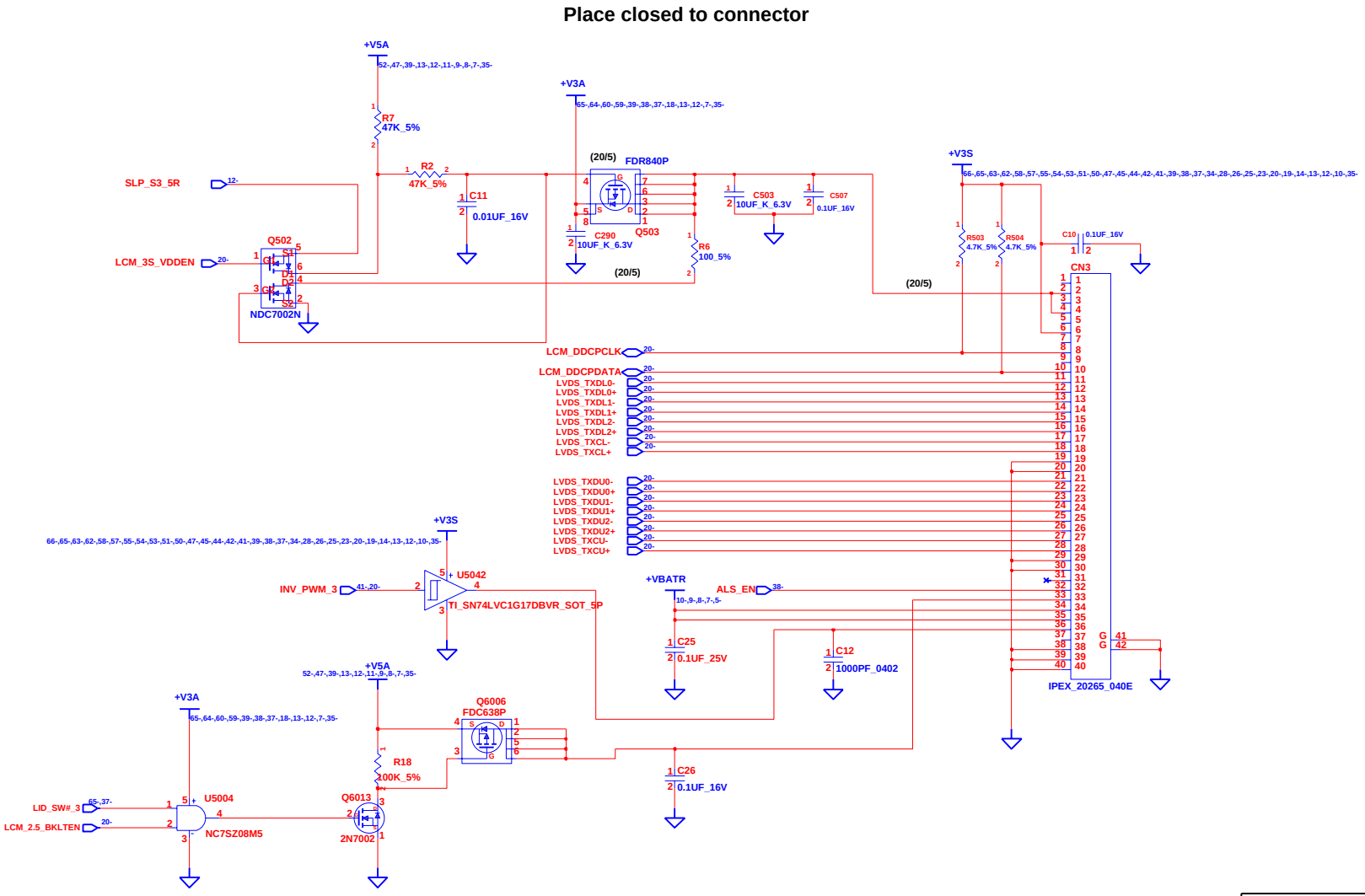

INVENTEC			
TITLE Title_Name LCD CONN			
SIZE A3	CODE CS	DOC. NUMBER Model_No	REV AX1
CHANGE by Drawer_Name	1-Dec-2004	SHEET 35 OF 68	

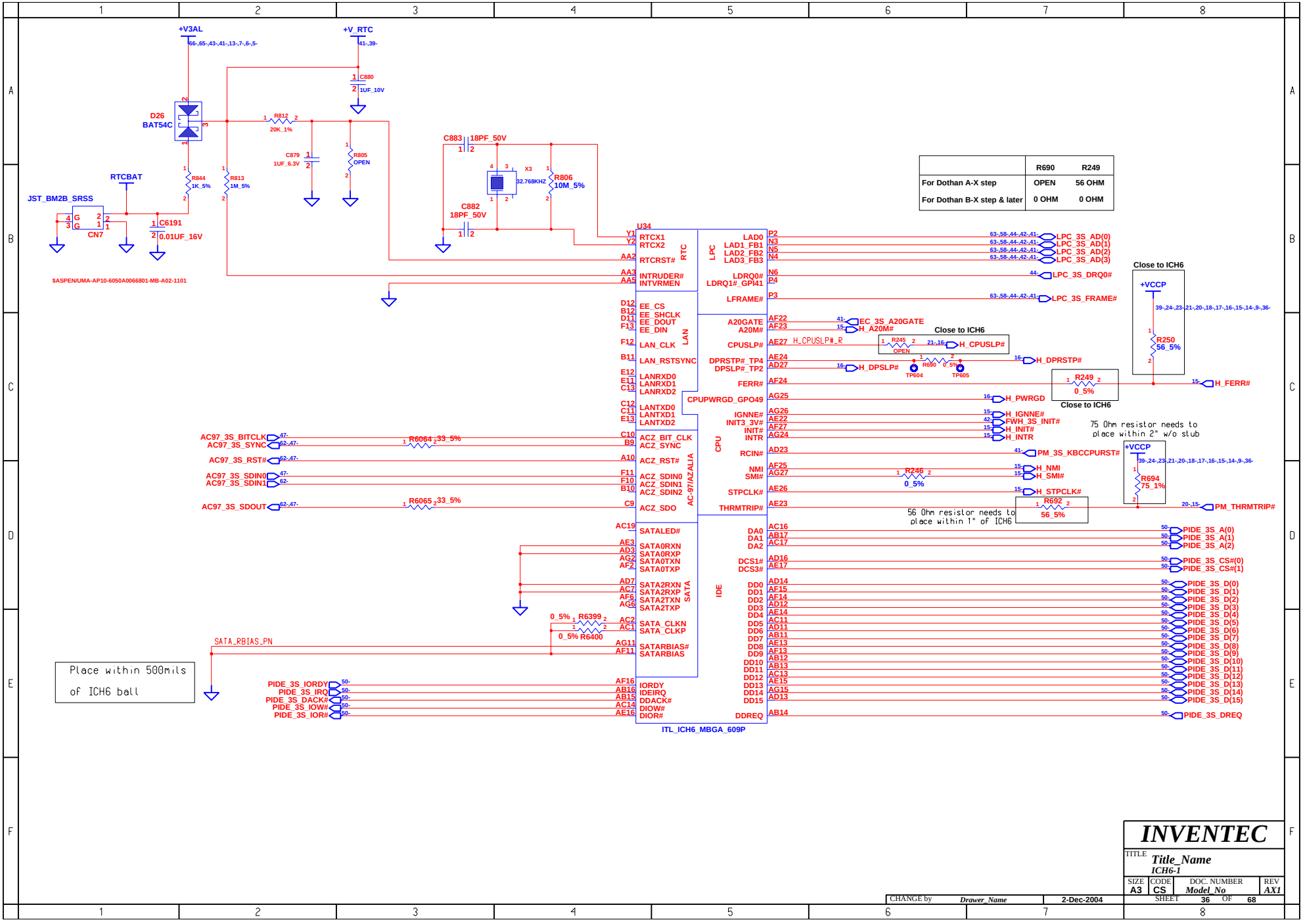

	R690	R249
For Dothan A-X step	OPEN	56 OHM
For Dothan B-X step & later	0 OHM	0 OHM

INVENTEC

TITLE *Title_Name*
ICH6-1

SIZE	CODE	DOC. NUMBER	REV
A3	CS	*Model_No*	*AX1*

SHEET 36 OF 68

CHANGE by *Drawer_Name* 2-Dec-2004

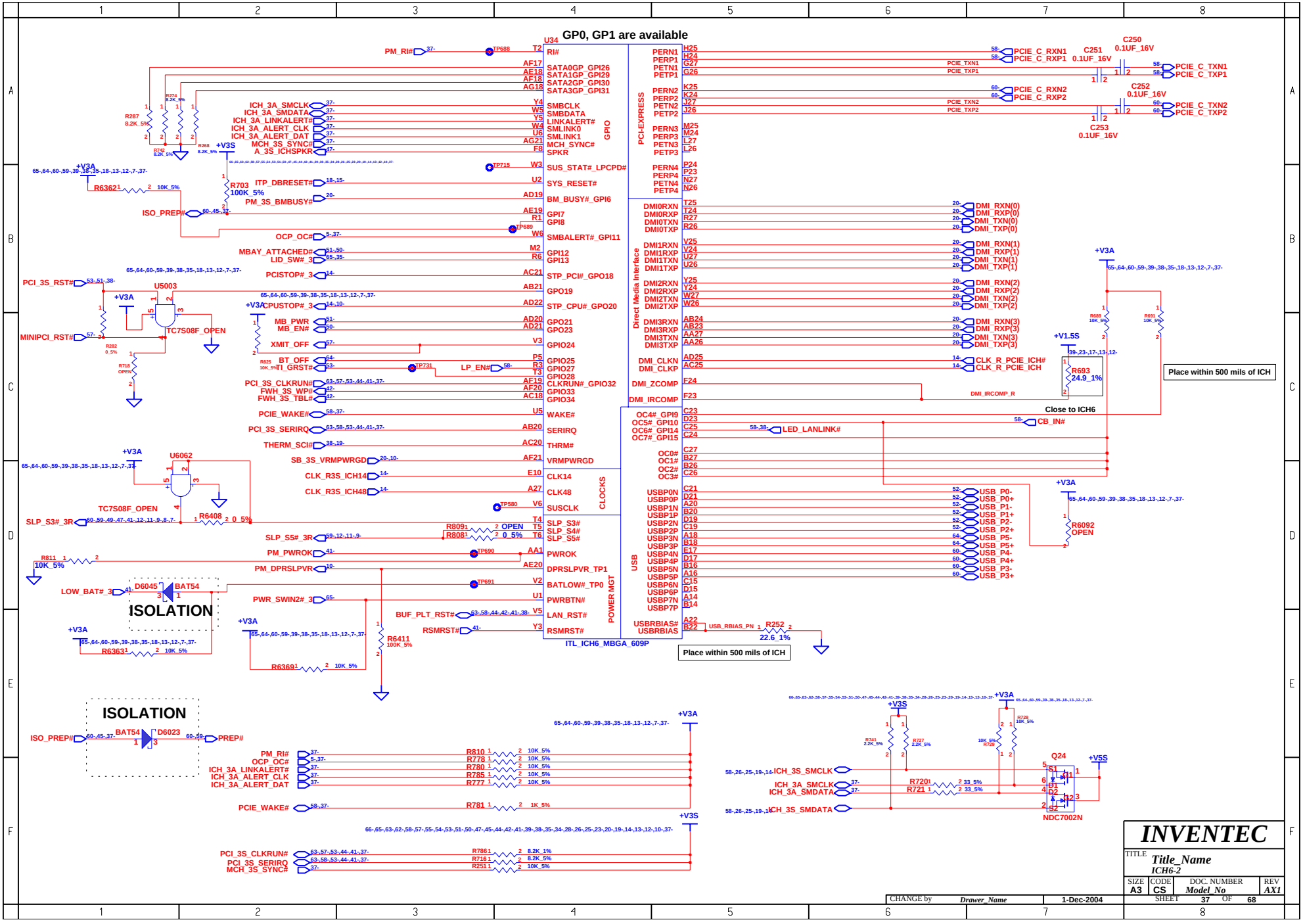
GP0, GP1 are available
U34
ITL_ICH6_MBGA_609P
GPIO
PCI-EXPRESS
Direct Media Interface
CLOCKS
USB
POWER MGT
PCIE_C_RXN1
PCIE_C_RXP1
PCIE_C_TXN1
PCIE_C_TXP1
PCIE_C_RXN2
PCIE_C_RXP2
PCIE_C_TXN2
PCIE_C_TXP2
C250 0.1UF_16V
C251 0.1UF_16V
C252 0.1UF_16V
C253 0.1UF_16V
DMI_RXN(0)
DMI_RXP(0)
DMI_TXN(0)
DMI_TXP(0)
DMI_RXN(1)
DMI_RXP(1)
DMI_TXN(1)
DMI_TXP(1)
DMI_RXN(2)
DMI_RXP(2)
DMI_TXN(2)
DMI_TXP(2)
DMI_RXN(3)
DMI_RXP(3)
DMI_TXN(3)
DMI_TXP(3)
CLK_R_PCIE_ICH#
CLK_R_PCIE_ICH
R693 24.9_1%
Place within 500 mils of ICH
Close to ICH6
CB_IN#
LED_LANLINK#
USB_P0-
USB_P0+
USB_P1-
USB_P1+
USB_P2-
USB_P2+
USB_P5-
USB_P5+
USB_P4-
USB_P4+
USB_P3-
USB_P3+
R6092 OPEN
R252 22.6_1%
Place within 500 mils of ICH
ICH_3A_SMCLK
ICH_3A_SMDATA
ICH_3A_LINKALERT#
ICH_3A_ALERT_CLK
ICH_3A_ALERT_DAT
MCH_3S_SYNC#
A_3S_ICHSPKR
ITP_DBRESET#
PM_3S_BMBUSY#
ISO_PREP#
OCP_OC#
MBAY_ATTACHED#
LID_SW#_3
PCISTOP#_3
PCI_3S_RST#
U5003
TC7S08F_OPEN
MINIPCI_RST#
CPUSTOP#_3
MB_PWR
MB_EN#
XMIT_OFF
BT_OFF
TI_GRST#
LP_EN#
PCI_3S_CLKRUN#
FWH_3S_WP#
FWH_3S_TBL#
PCIE_WAKE#
PCI_3S_SERIRQ
THERM_SCI#
SB_3S_VRMPWRGD
CLK_R3S_ICH14
CLK_R3S_ICH48
U6062
SLP_S3#_3R
SLP_S5#_3R
PM_PWROK
PM_DPRSLPVR
LOW_BAT#_3
D6045
BAT54
ISOLATION
PWR_SWIN2#_3
BUF_PLT_RST#
RSMRST#
R6411 100K_5%
R6363 10K_5%
R6369 10K_5%
R6362 10K_5%
R703 100K_5%
R287 8.2K_5%
R268 8.2K_5%
R742 8.2K_5%
R811 10K_5%
R8091 OPEN
R8081 0_5%
R6408 0_5%
R282 0_5%
R718 OPEN
R825 10K_5%
R689 10K_5%
R691 10K_5%
R6092 OPEN
ISOLATION
ISO_PREP#
BAT54
D6023
PREP#
PM_RI#
OCP_OC#
ICH_3A_LINKALERT#
ICH_3A_ALERT_CLK
ICH_3A_ALERT_DAT
PCIE_WAKE#
PCI_3S_CLKRUN#
PCI_3S_SERIRQ
MCH_3S_SYNC#
R810 10K_5%
R778 10K_5%
R780 10K_5%
R785 10K_5%
R777 10K_5%
R781 1K_5%
R786 8.2K_1%
R716 8.2K_5%
R251 10K_5%
R741 2.2K_5%
R227 2.2K_5%
R728 10K_5%
R729 10K_5%
R720 33_5%
R721 33_5%
Q24
NDC7002N
+V3A
+V3S
+V5S
+V1.5S
INVENTEC
TITLE
Title_Name
ICH6-2
SIZE A3
CODE CS
DOC. NUMBER Model_No
REV AX1
SHEET 37 OF 68
CHANGE by Drawer_Name
1-Dec-2004

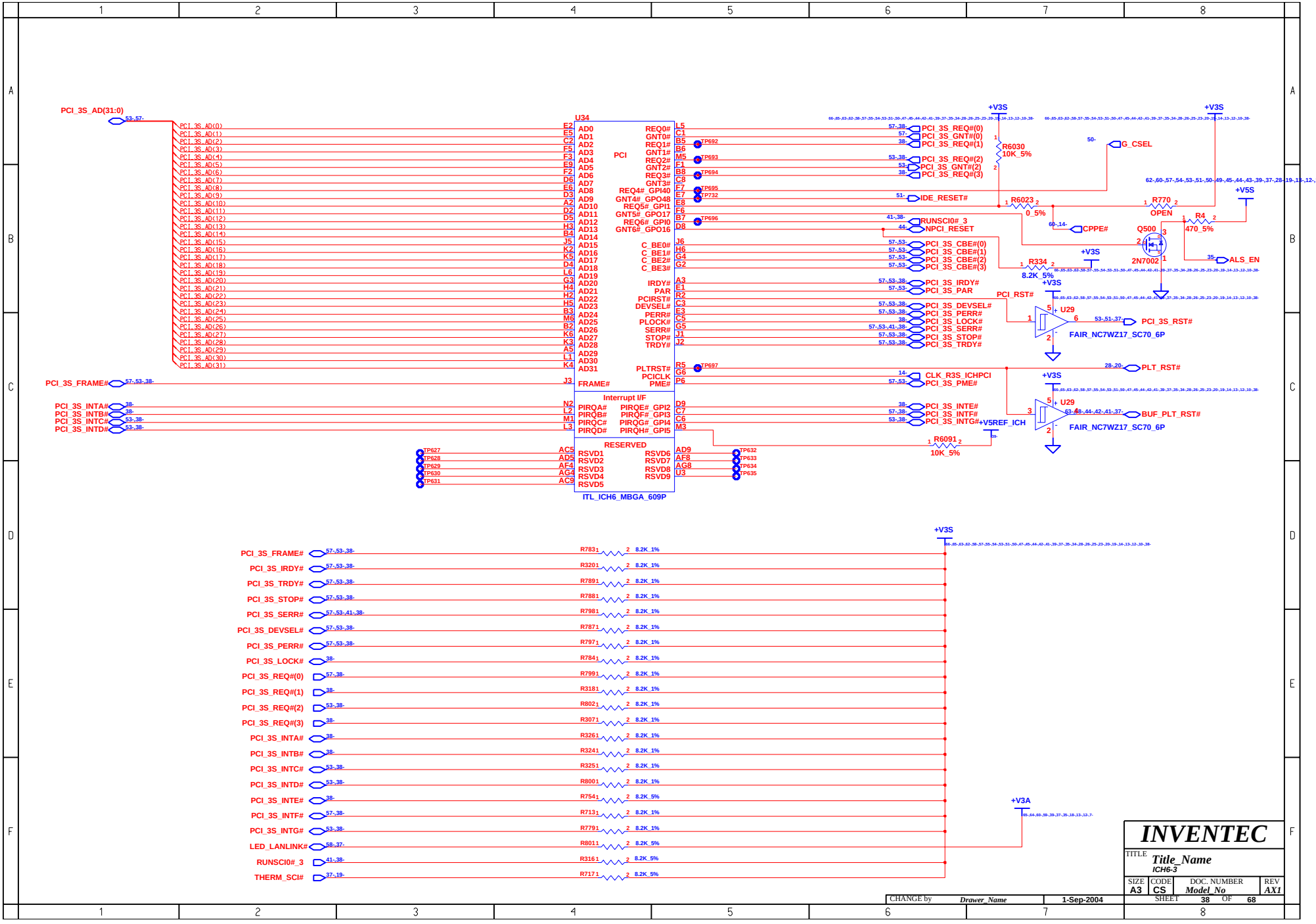
U34
ITL_ICH6_MBGA_609P
PCI
Interrupt I/F
RESERVED
PCI_3S_AD(31:0)
PCI_3S_FRAME#
PCI_3S_INTA#
PCI_3S_INTB#
PCI_3S_INTC#
PCI_3S_INTD#
PCI_3S_REQ#(0)
PCI_3S_GNT#(0)
PCI_3S_REQ#(1)
PCI_3S_REQ#(2)
PCI_3S_GNT#(2)
PCI_3S_REQ#(3)
IDE_RESET#
RUNSCI0#_3
NPCI_RESET
PCI_3S_CBE#(0)
PCI_3S_CBE#(1)
PCI_3S_CBE#(2)
PCI_3S_CBE#(3)
PCI_3S_IRDY#
PCI_3S_PAR
PCI_3S_DEVSEL#
PCI_3S_PERR#
PCI_3S_LOCK#
PCI_3S_SERR#
PCI_3S_STOP#
PCI_3S_TRDY#
CLK_R3S_ICHPCI
PCI_3S_PME#
PCI_3S_INTE#
PCI_3S_INTF#
PCI_3S_INTG#
+V5REF_ICH
R6030 10K_5%
R6023 0_5%
R770 OPEN
R4 470_5%
R334 8.2K_5%
R6091 10K_5%
G_CSEL
CPPE#
Q500 2N7002
ALS_EN
PCI_RST#
PLT_RST#
BUF_PLT_RST#
U29
FAIR_NC7WZ17_SC70_6P
+V3S
+V5S
+V3A
LED_LANLINK#
THERM_SCI#
R783 8.2K_1%
R3201 8.2K_1%
R7891 8.2K_1%
R7881 8.2K_1%
R7981 8.2K_1%
R7871 8.2K_1%
R7971 8.2K_1%
R7841 8.2K_1%
R7991 8.2K_1%
R3181 8.2K_1%
R8021 8.2K_1%
R3071 8.2K_1%
R3261 8.2K_1%
R3241 8.2K_1%
R3251 8.2K_1%
R8001 8.2K_1%
R7541 8.2K_5%
R7131 8.2K_1%
R7791 8.2K_1%
R8011 8.2K_5%
R3161 8.2K_5%
R7171 8.2K_5%
INVENTEC
TITLE Title_Name
ICH6-3
SIZE A3
CODE CS
DOC. NUMBER Model_No
REV AX1
SHEET 38 OF 68
CHANGE by Drawer_Name
1-Sep-2004

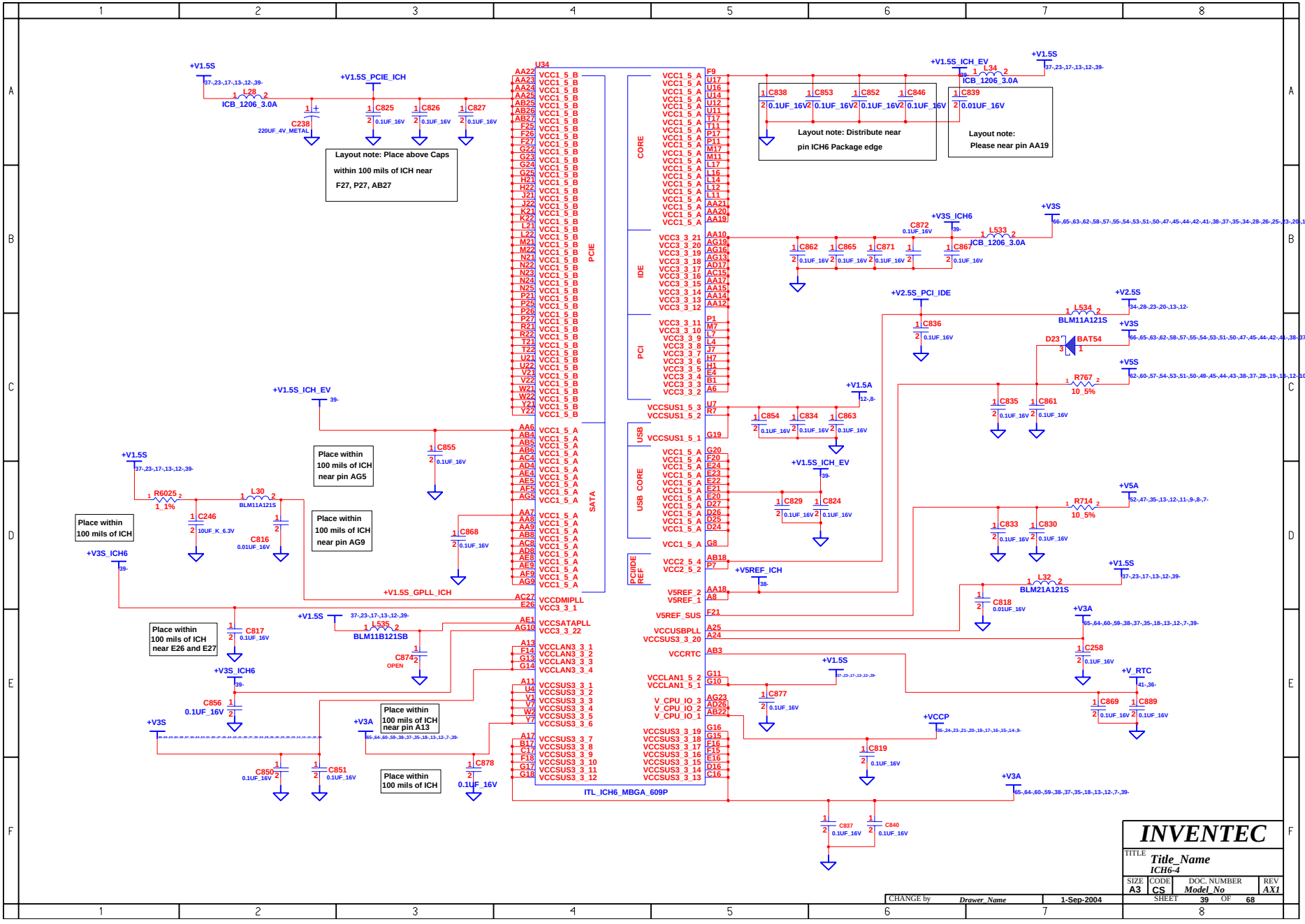
U34
ITL_ICH6_MBGA_609P
PCIE
SATA
CORE
IDE
PCI
USB
USB CORE
PCI/IDE REF
+V1.5S
+V1.5S_PCIE_ICH
+V1.5S_ICH_EV
+V3S_ICH6
+V3S
+V3A
+V2.5S_PCI_IDE
+V2.5S
+V5S
+V5A
+V1.5A
+V5REF_ICH
+V1.5S_GPLL_ICH
+V_RTC
+VCCP
L28 ICB_1206_3.0A
L34 ICB_1206_3.0A
L533 ICB_1206_3.0A
L534 BLM11A121S
L30 BLM11A121S
L535 BLM11B121SB
L32 BLM21A121S
D23 BAT54
R6025 1_1%
R767 10_5%
R714 10_5%
C238 220UF_4V_METAL
C825 0.1UF_16V
C826 0.1UF_16V
C827 0.1UF_16V
C838 0.1UF_16V
C853 0.1UF_16V
C852 0.1UF_16V
C846 0.1UF_16V
C839 0.01UF_16V
C872 0.1UF_16V
C862 0.1UF_16V
C865 0.1UF_16V
C871 0.1UF_16V
C867 0.1UF_16V
C836 0.1UF_16V
C835 0.1UF_16V
C861 0.1UF_16V
C854 0.1UF_16V
C834 0.1UF_16V
C863 0.1UF_16V
C829 0.1UF_16V
C824 0.1UF_16V
C833 0.1UF_16V
C830 0.1UF_16V
C818 0.01UF_16V
C258 0.1UF_16V
C869 0.1UF_16V
C889 0.1UF_16V
C877 0.1UF_16V
C819 0.1UF_16V
C837 0.1UF_16V
C840 0.1UF_16V
C855 0.1UF_16V
C868 0.1UF_16V
C246 10UF_K_6.3V
C816 0.01UF_16V
C817 0.1UF_16V
C874 OPEN
C856 0.1UF_16V
C850 0.1UF_16V
C851 0.1UF_16V
C878 0.1UF_16V
Layout note: Place above Caps within 100 mils of ICH near F27, P27, AB27
Layout note: Distribute near pin ICH6 Package edge
Layout note: Please near pin AA19
Place within 100 mils of ICH near pin AG5
Place within 100 mils of ICH near pin AG9
Place within 100 mils of ICH near pin A13
Place within 100 mils of ICH near E26 and E27
Place within 100 mils of ICH
INVENTEC
TITLE Title_Name
ICH6-4
SIZE A3
CODE CS
DOC. NUMBER Model_No
REV AX1
CHANGE by Drawer_Name
1-Sep-2004
SHEET 39 OF 68

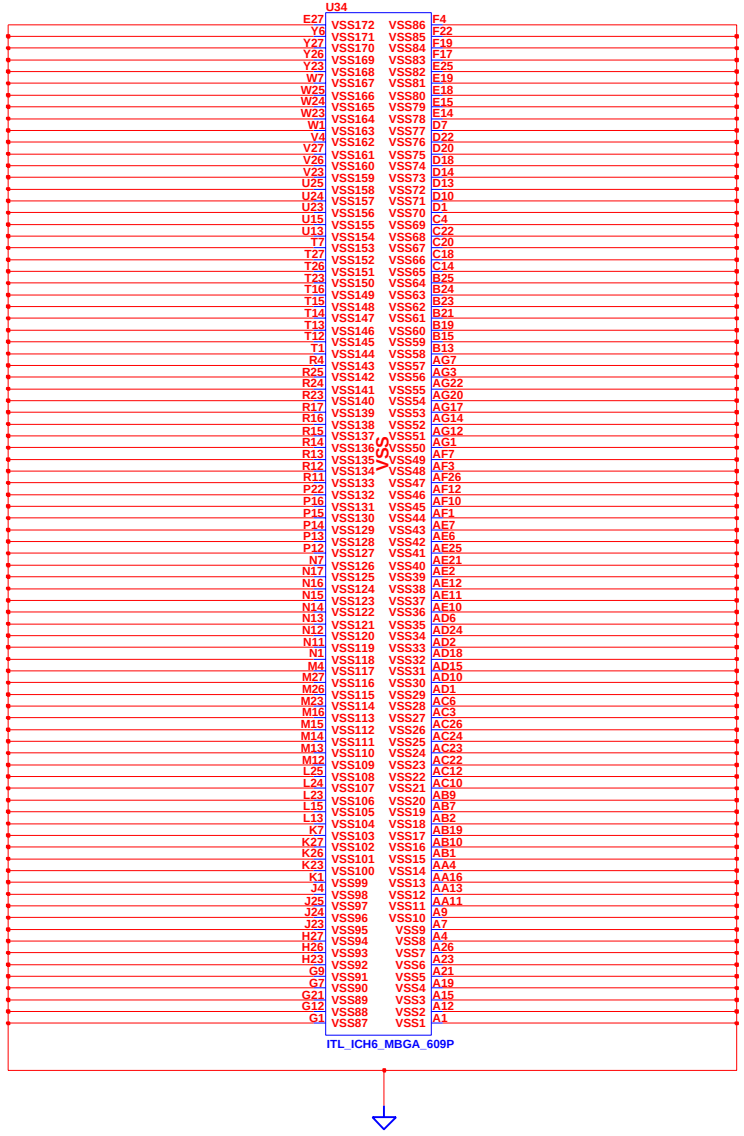

CHANGE by	Drawer_Name	1-Sep-2004	

INVENTEC

TITLE *Title_Name*
ICH6-5

SIZE	CODE	DOC. NUMBER	REV
A3	CS	Model_No	AX1

SHEET 40 OF 68

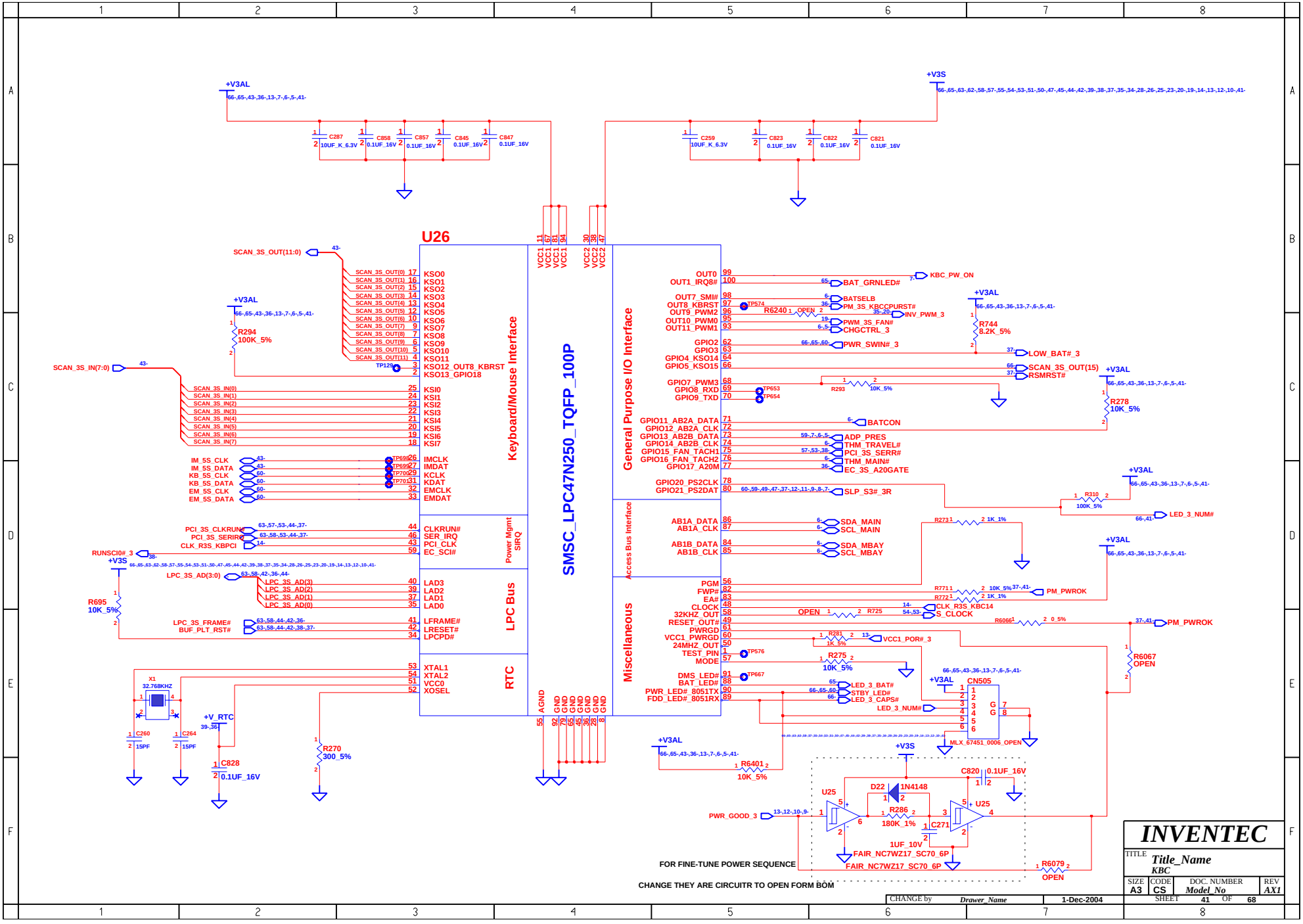
U26
SMSC_LPC47N250_TQFP_100P
Keyboard/Mouse Interface
Power Mgmt SIRQ
LPC Bus
RTC
General Purpose I/O Interface
Access Bus Interface
Miscellaneous
+V3AL
+V3S
+V_RTC
SCAN_3S_OUT(11:0)
SCAN_3S_IN(7:0)
KSO0
KSO1
KSO2
KSO3
KSO4
KSO5
KSO6
KSO7
KSO8
KSO9
KSO10
KSO11
KSO12_OUT8_KBRST
KSO13_GPIO18
KSI0
KSI1
KSI2
KSI3
KSI4
KSI5
KSI6
KSI7
IMCLK
IMDAT
KCLK
KDAT
EMCLK
EMDAT
CLKRUN#
SER_IRQ
PCI_CLK
EC_SCI#
LAD3
LAD2
LAD1
LAD0
LFRAME#
LRESET#
LPCPD#
XTAL1
XTAL2
VCC0
XOSEL
OUT0
OUT1_IRQ8#
OUT7_SMI#
OUT8_KBRST
OUT9_PWM2
OUT10_PWM0
OUT11_PWM1
GPIO2
GPIO3
GPIO4_KSO14
GPIO5_KSO15
GPIO7_PWM3
GPIO8_RXD
GPIO9_TXD
GPIO11_AB2A_DATA
GPIO12_AB2A_CLK
GPIO13_AB2B_DATA
GPIO14_AB2B_CLK
GPIO15_FAN_TACH1
GPIO16_FAN_TACH2
GPIO17_A20M
GPIO20_PS2CLK
GPIO21_PS2DAT
AB1A_DATA
AB1A_CLK
AB1B_DATA
AB1B_CLK
PGM
FWP#
EA#
CLOCK
32KHZ_OUT
RESET_OUT#
PWRGD
VCC1_PWRGD
24MHZ_OUT
TEST_PIN
MODE
DMS_LED#
BAT_LED#
PWR_LED#_8051TX
FDD_LED#_8051RX
KBC_PW_ON
BAT_GRNLED#
BATSELB
PM_3S_KBCCPURST#
INV_PWM_3
PWM_3S_FAN#
CHGCTRL_3
PWR_SWIN#_3
LOW_BAT#_3
SCAN_3S_OUT(15)
RSMRST#
BATCON
ADP_PRES
THM_TRAVEL#
PCI_3S_SERR#
THM_MAIN#
EC_3S_A20GATE
SLP_S3#_3R
LED_3_NUM#
SDA_MAIN
SCL_MAIN
SDA_MBAY
SCL_MBAY
PM_PWROK
CLK_R3S_KBC14
S_CLOCK
VCC1_POR#_3
LED_3_BAT#
STBY_LED#
LED_3_CAPS#
CN505
MLX_67451_0006_OPEN
PWR_GOOD_3
FAIR_NC7WZ17_SC70_6P
FOR FINE-TUNE POWER SEQUENCE
CHANGE THEY ARE CIRCUITR TO OPEN FORM BOM
INVENTEC
TITLE
Title_Name
KBC
SIZE A3
CODE CS
DOC. NUMBER Model_No
REV AX1
CHANGE by Drawer_Name
1-Dec-2004
SHEET 41 OF 68

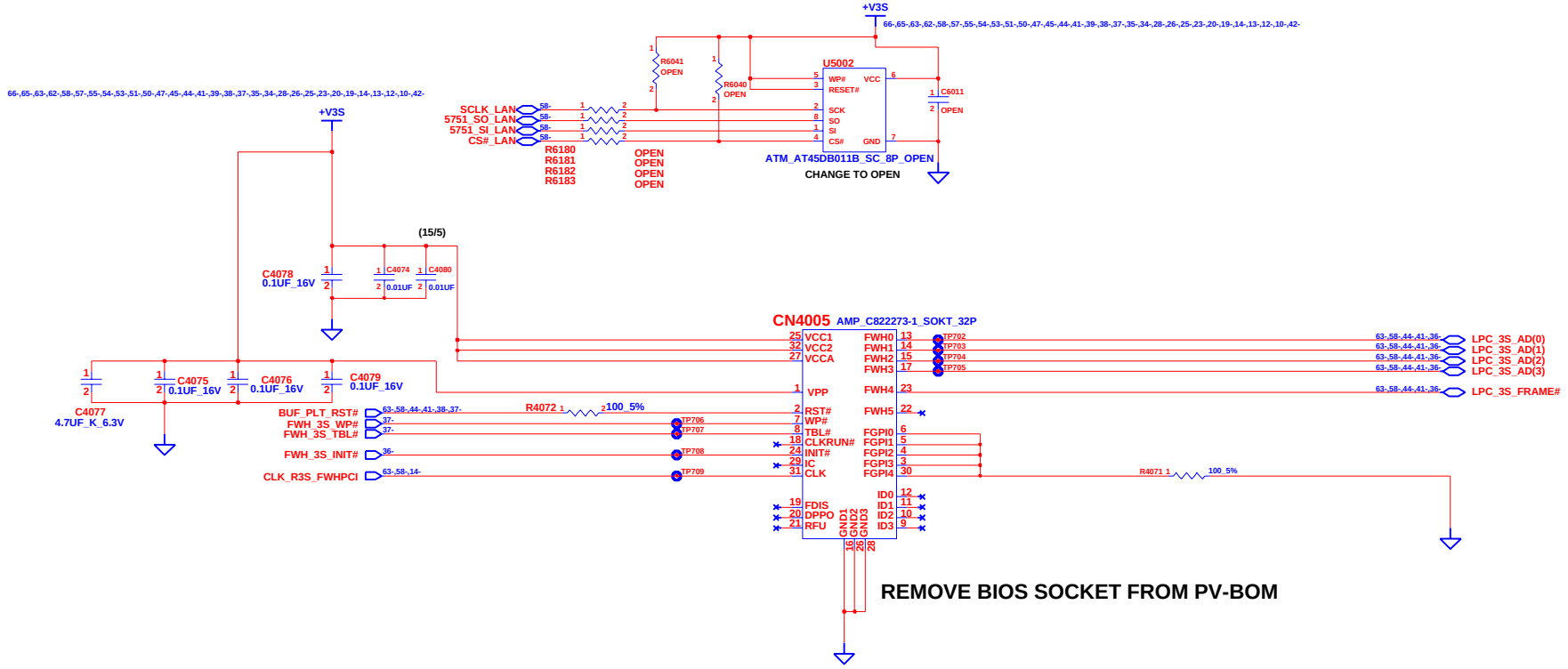

REMOVE BIOS SOCKET FROM PV-BOM

CHANGE by	Drawer_Name	1-Dec-2004	

INVENTEC

TITLE *Title_Name*
FWH

SIZE	CODE	DOC. NUMBER	REV
A3	CS	*Model_No*	*AX1*

SHEET 42 OF 68

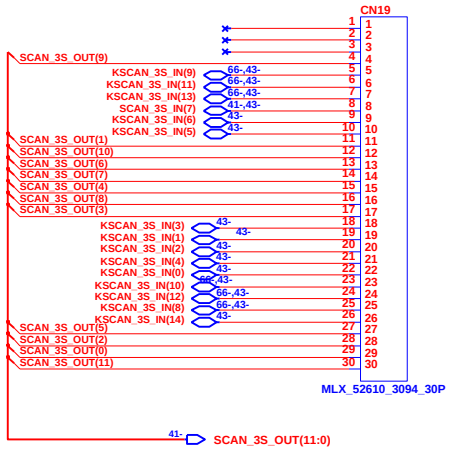

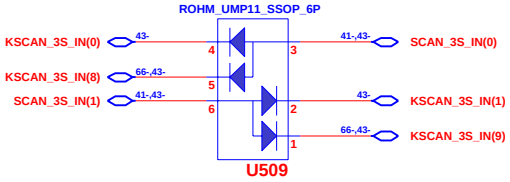

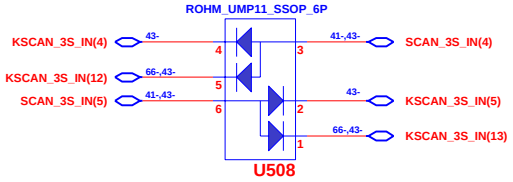

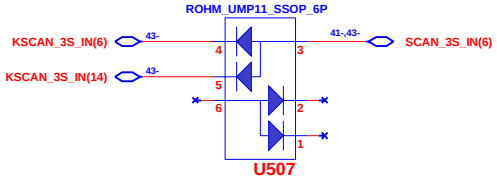

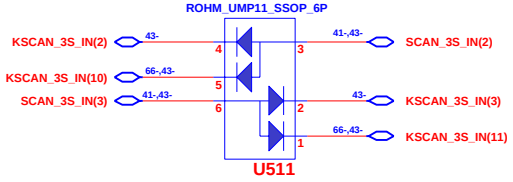

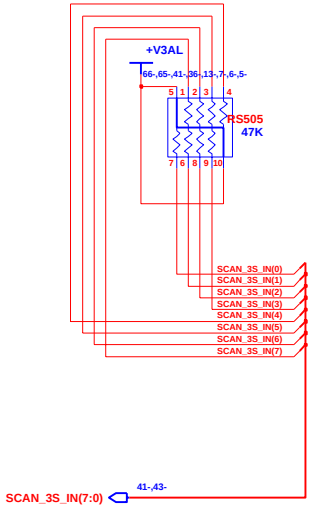

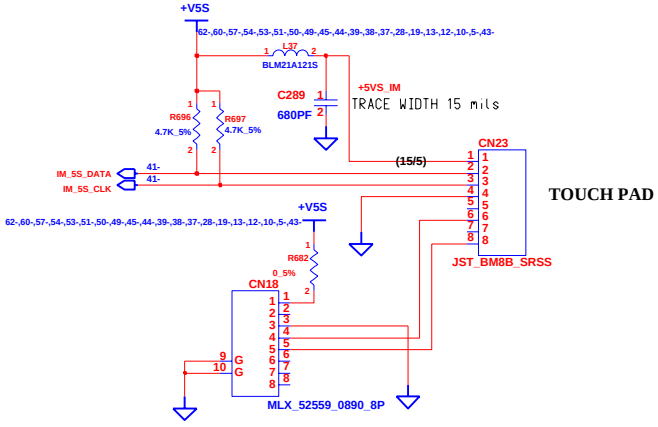

POINT STICK

INVENTEC

TITLE Title_Name
INT.KBC/POINT DEVICES

SIZE	CODE	DOC. NUMBER	REV
A3	CS	Model_No	AX1

SHEET 43 OF 68

CHANGE by	Drawer_Name	1-Dec-2004

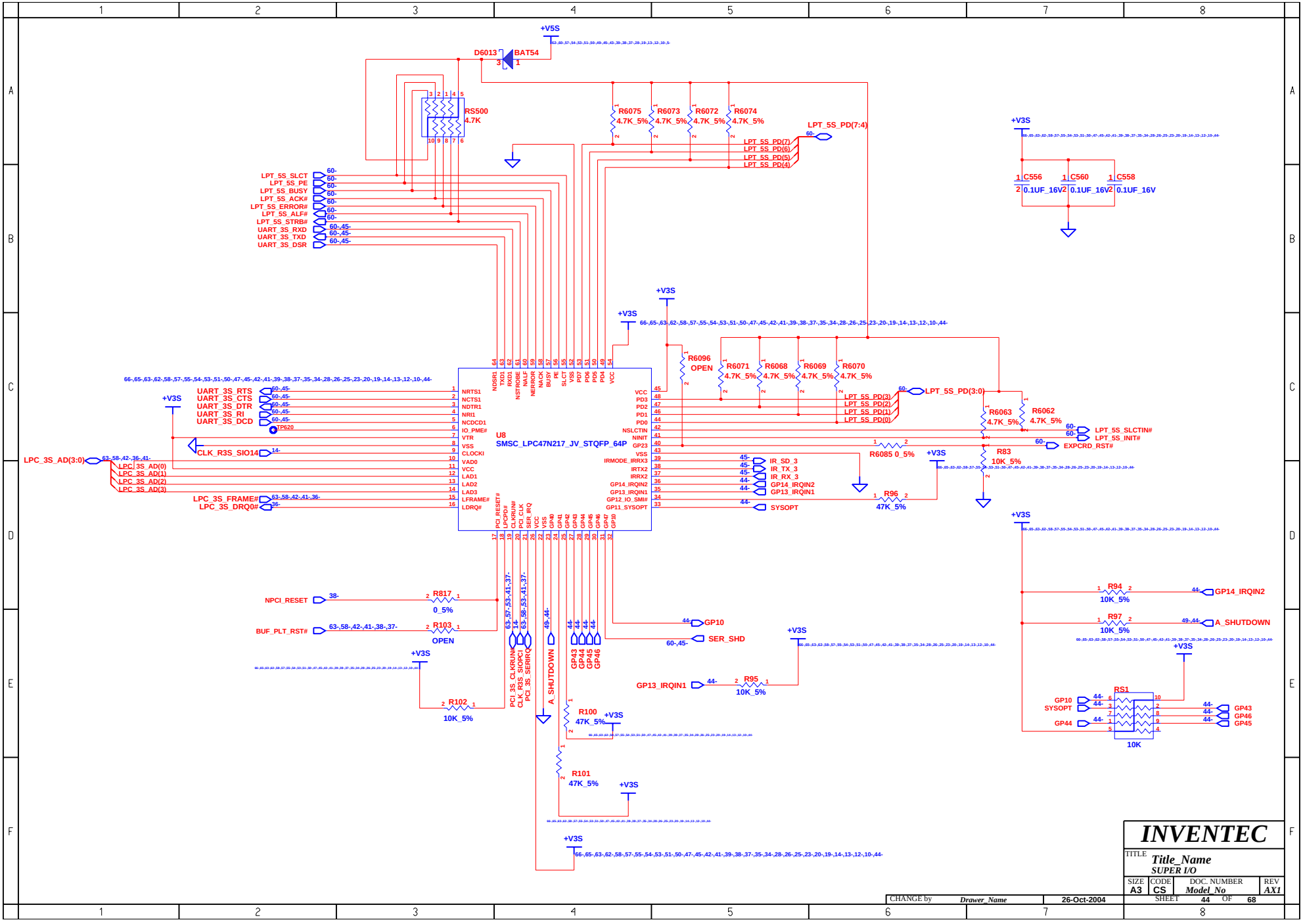
+V5S
D6013
BAT54
RS500
4.7K
R6075
4.7K_5%
R6073
4.7K_5%
R6072
4.7K_5%
R6074
4.7K_5%
LPT_5S_PD(7:4)
LPT_5S_PD(7)
LPT_5S_PD(6)
LPT_5S_PD(5)
LPT_5S_PD(4)
+V3S
C556
0.1UF_16V
C560
0.1UF_16V
C558
0.1UF_16V
LPT_5S_SLCT
LPT_5S_PE
LPT_5S_BUSY
LPT_5S_ACK#
LPT_5S_ERROR#
LPT_5S_ALF#
LPT_5S_STRB#
UART_3S_RXD
UART_3S_TXD
UART_3S_DSR
R6096
OPEN
R6071
4.7K_5%
R6068
4.7K_5%
R6069
4.7K_5%
R6070
4.7K_5%
LPT_5S_PD(3:0)
LPT_5S_PD(3)
LPT_5S_PD(2)
LPT_5S_PD(1)
LPT_5S_PD(0)
R6063
4.7K_5%
R6062
4.7K_5%
LPT_5S_SLCTIN#
LPT_5S_INIT#
EXPCRD_RST#
R6085 0_5%
R83
10K_5%
UART_3S_RTS
UART_3S_CTS
UART_3S_DTR
UART_3S_RI
UART_3S_DCD
TP620
CLK_R3S_SIO14
LPC_3S_AD(3:0)
LPC_3S_AD(0)
LPC_3S_AD(1)
LPC_3S_AD(2)
LPC_3S_AD(3)
LPC_3S_FRAME#
LPC_3S_DRQ0#
U8
SMSC_LPC47N217_JV_STQFP_64P
IR_SD_3
IR_TX_3
IR_RX_3
GP14_IRQIN2
GP13_IRQIN1
SYSOPT
R96
47K_5%
NPCI_RESET
R817
0_5%
BUF_PLT_RST#
R103
OPEN
R102
10K_5%
PCI_3S_CLKRUN#
CLK_R3S_SIOPCI
PCI_3S_SERIRQ
A_SHUTDOWN
GP10
SER_SHD
GP13_IRQIN1
R95
10K_5%
GP43
GP44
GP45
GP46
R100
47K_5%
R101
47K_5%
R94
10K_5%
GP14_IRQIN2
R97
10K_5%
A_SHUTDOWN
RS1
10K
GP10
SYSOPT
GP44
GP43
GP46
GP45
INVENTEC
TITLE
Title_Name
SUPER I/O
SIZE A3
CODE CS
DOC. NUMBER Model_No
REV AX1
SHEET 44 OF 68
CHANGE by Drawer_Name
26-Oct-2004

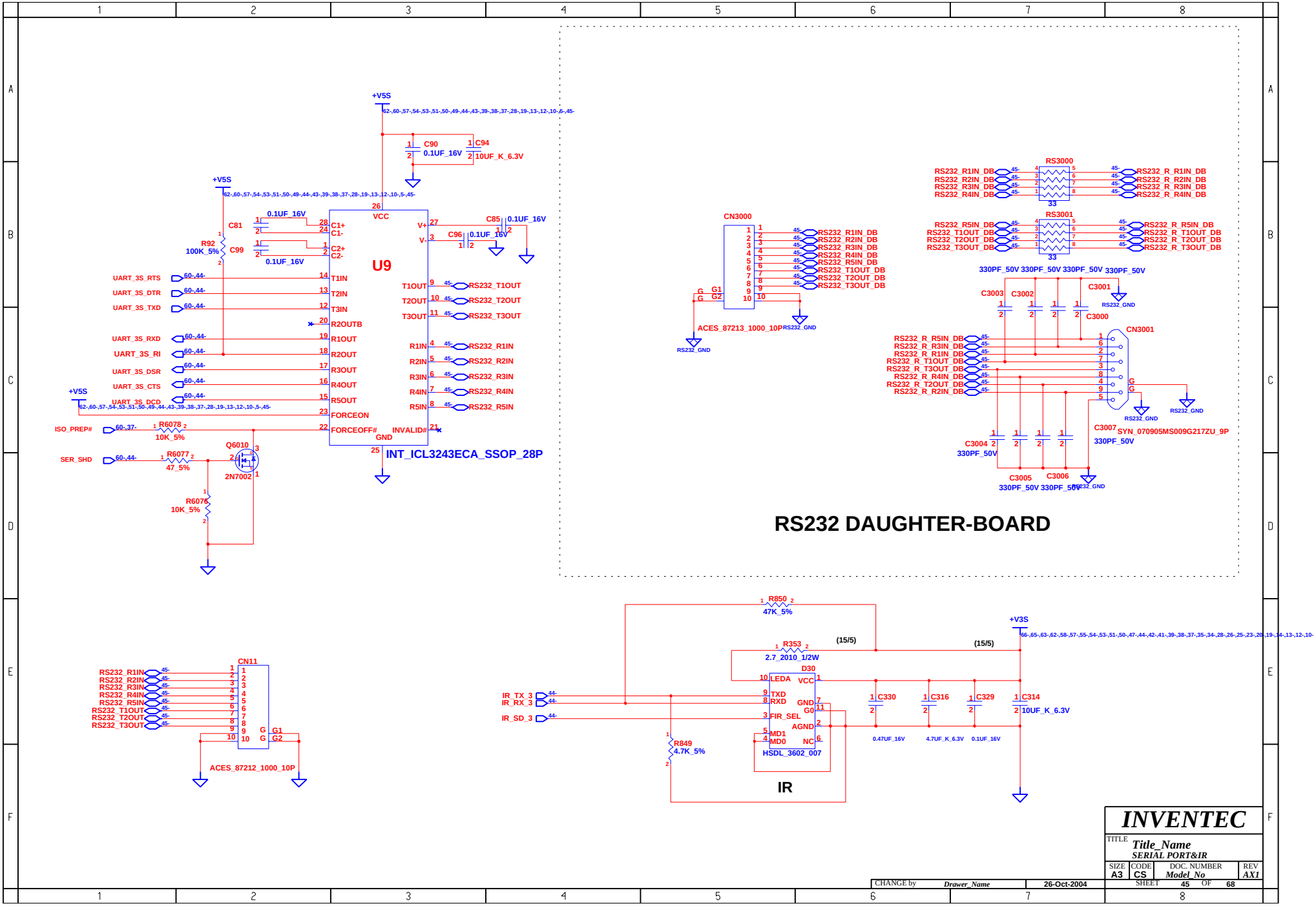
U9
INT_ICL3243ECA_SSOP_28P
RS232 DAUGHTER-BOARD
CN3000
ACES_87213_1000_10P
CN3001
SYN_070905MS009G217ZU_9P
RS3000
RS3001
CN11
ACES_87212_1000_10P
IR
HSDL_3602_007
INVENTEC
Title_Name
SERIAL PORT&IR
A3
CS
Model_No
AX1
26-Oct-2004
SHEET 45 OF 68

BLANK

INVENTEC				
TITLE Title_Name PARALLER PORT				
SIZE A3	CODE CS	DOC. NUMBER Model_No		REV AX1
CHANGE by Drawer_Name	1-Sep-2004	SHEET 46 OF 68		

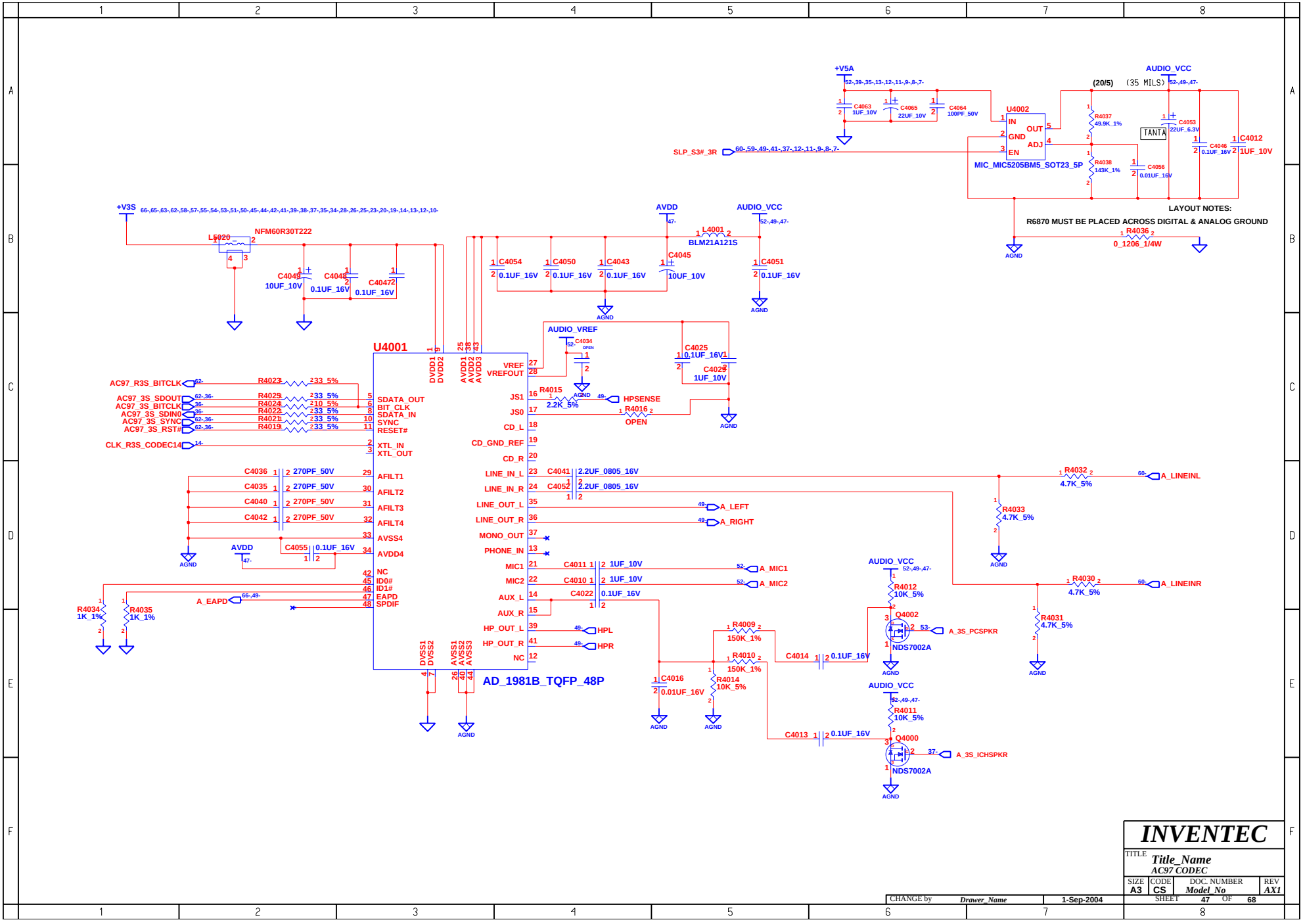
+V5A
AUDIO_VCC
(20/5)
(35 MILS)
U4002
IN
OUT
GND
ADJ
EN
MIC_MIC5205BM5_SOT23_5P
SLP_S3#_3R
C4063 1UF_10V
C4065 22UF_10V
C4064 100PF_50V
R4037 49.9K_1%
R4038 143K_1%
C4053 22UF_6.3V
TANTA
C4056 0.01UF_16V
C4046 0.1UF_16V
C4012 1UF_10V
LAYOUT NOTES:
R6870 MUST BE PLACED ACROSS DIGITAL & ANALOG GROUND
R4036 0_1206_1/4W
AGND
+V3S
L5020 NFM60R30T222
C4049 10UF_10V
C4048 0.1UF_16V
C4047 0.1UF_16V
AVDD
L4001 BLM21A121S
C4054 0.1UF_16V
C4050 0.1UF_16V
C4043 0.1UF_16V
C4045 10UF_10V
C4051 0.1UF_16V
AUDIO_VREF
C4034 OPEN
C4025 0.1UF_16V
C4028 1UF_10V
U4001
AD_1981B_TQFP_48P
VDD1 VDD2 AVDD1 AVDD2 AVDD3
VREF VREFOUT
JS1 JS0 CD_L CD_GND_REF CD_R
LINE_IN_L LINE_IN_R LINE_OUT_L LINE_OUT_R
MONO_OUT PHONE_IN
MIC1 MIC2 AUX_L AUX_R
HP_OUT_L HP_OUT_R NC
SDATA_OUT BIT_CLK SDATA_IN SYNC RESET#
XTL_IN XTL_OUT
AFILT1 AFILT2 AFILT3 AFILT4 AVSS4 AVDD4
ID0# ID1# EAPD SPDIF
DVSS1 DVSS2 AVSS1 AVSS2 AVSS3
AC97_R3S_BITCLK
AC97_3S_SDOUT
AC97_3S_BITCLK
AC97_3S_SDIN0
AC97_3S_SYNC
AC97_3S_RST#
CLK_R3S_CODEC14
R4023 33_5%
R4025 33_5%
R4024 10_5%
R4022 33_5%
R4021 33_5%
R4019 33_5%
R4015 2.2K_5%
HPSENSE
R4016 OPEN
C4036 270PF_50V
C4035 270PF_50V
C4040 270PF_50V
C4042 270PF_50V
C4055 0.1UF_16V
A_EAPD
R4034 1K_1%
R4035 1K_1%
C4041 2.2UF_0805_16V
C4052 2.2UF_0805_16V
A_LEFT
A_RIGHT
C4011 1UF_10V
C4010 1UF_10V
C4022 0.1UF_16V
A_MIC1
A_MIC2
HPL
HPR
C4016 0.01UF_16V
R4009 150K_1%
R4010 150K_1%
R4014 10K_5%
C4014 0.1UF_16V
C4013 0.1UF_16V
R4012 10K_5%
R4011 10K_5%
Q4002 NDS7002A
Q4000 NDS7002A
A_3S_PCSPKR
A_3S_ICHSPKR
R4032 4.7K_5%
R4033 4.7K_5%
R4030 4.7K_5%
R4031 4.7K_5%
A_LINEINL
A_LINEINR
INVENTEC
TITLE
Title_Name
AC97 CODEC
SIZE A3
CODE CS
DOC. NUMBER Model_No
REV AX1
SHEET 47 OF 68
CHANGE by Drawer_Name
1-Sep-2004

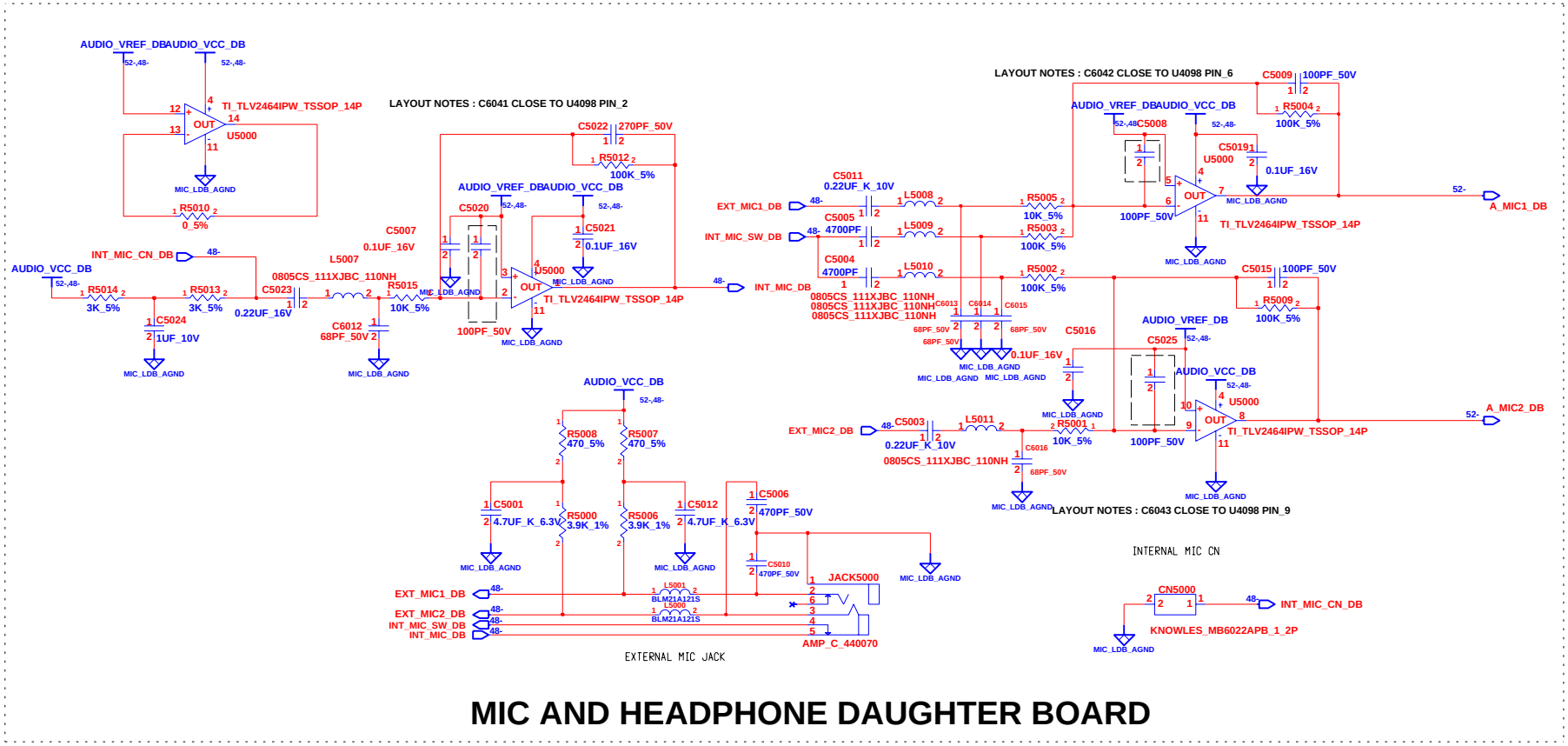

MIC AND HEADPHONE DAUGHTER BOARD

INVENTEC			
TITLE ASPEN-UMA EQ&MIC JACK			
SIZE A3	CODE CS	DOC. NUMBER Model_No	REV AX2
CHANGE by Drawer_Name	1-Dec-2004	SHEET 48 OF 68	

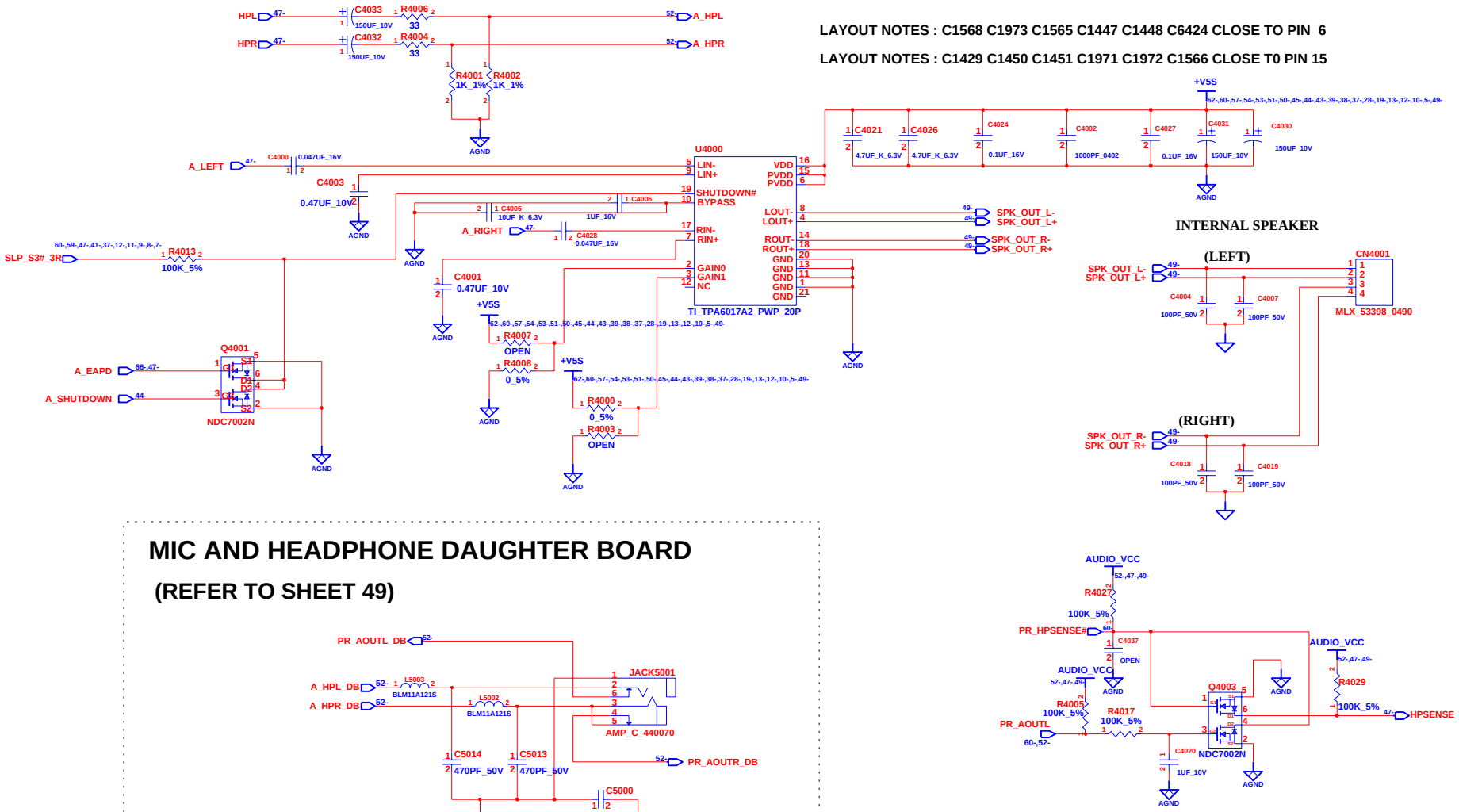

CHANGE by	Drawer_Name	1-Dec-2004	

INVENTEC

TITLE *ASPEN-UMA*
AUDIO AMP & HP JACK

SIZE	CODE	DOC. NUMBER	REV
A3	CS	Model_No	AX2

SHEET 49 OF 68

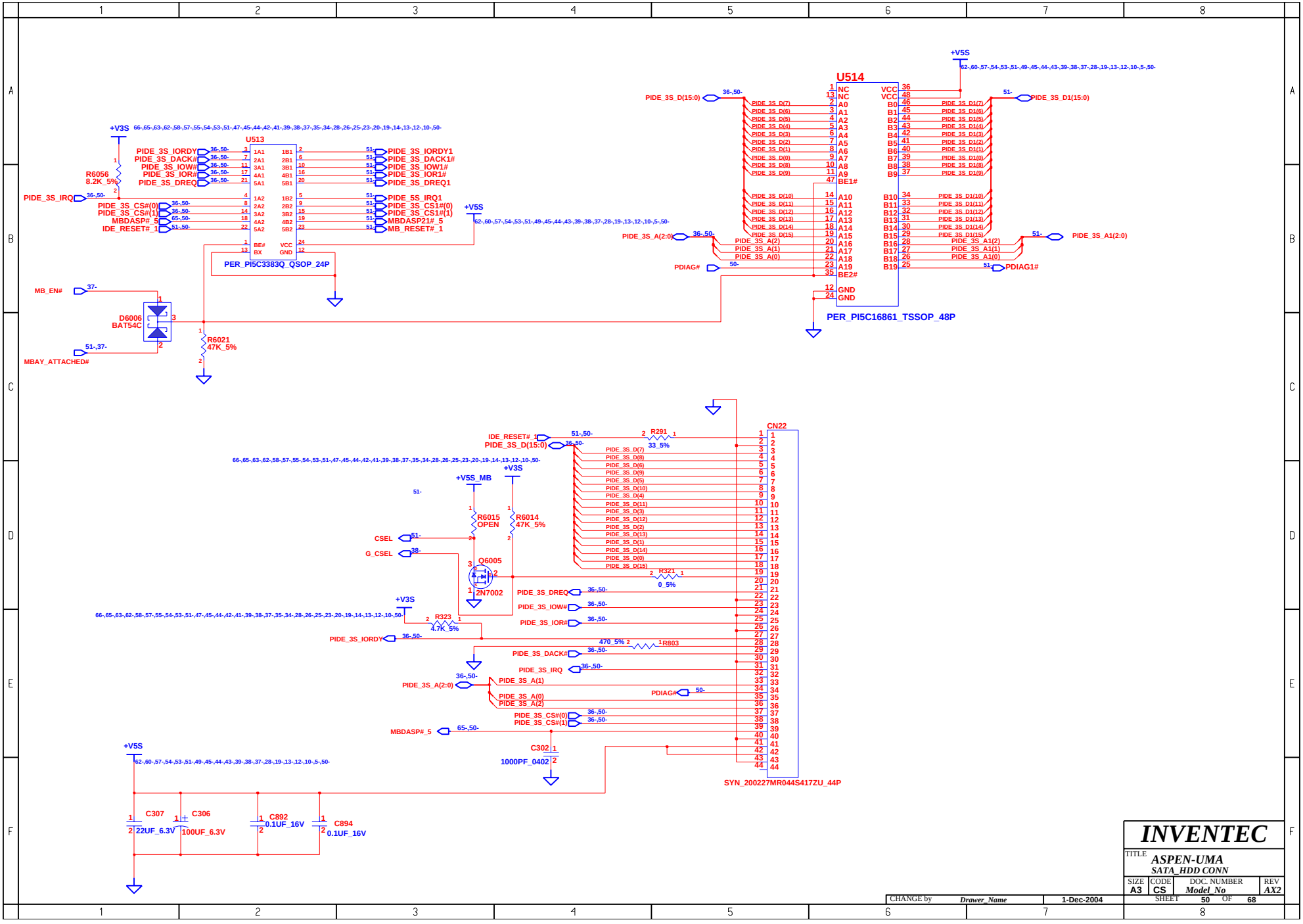
U513
PER_PI5C3383Q_QSOP_24P
U514
PER_PI5C16861_TSSOP_48P
CN22
SYN_200227MR044S417ZU_44P
+V3S
+V5S
+V5S_MB
R6056 8.2K_5%
R6021 47K_5%
D6006 BAT54C
R6015 OPEN
R6014 47K_5%
Q6005 2N7002
R291 33_5%
R321 0_5%
R323 4.7K_5%
R803 470_5%
C302 1000PF_0402
C307 22UF_6.3V
C306 100UF_6.3V
C892 0.1UF_16V
C894 0.1UF_16V
PIDE_3S_IORDY
PIDE_3S_DACK#
PIDE_3S_IOW#
PIDE_3S_IOR#
PIDE_3S_DREQ
PIDE_3S_IRQ
PIDE_3S_CS#(0)
PIDE_3S_CS#(1)
MBDASP#_5
IDE_RESET#_1
MB_EN#
MBAY_ATTACHED#
PIDE_3S_D(15:0)
PIDE_3S_D1(15:0)
PIDE_3S_A(2:0)
PIDE_3S_A1(2:0)
PDIAG#
PDIAG1#
CSEL
G_CSEL
INVENTEC
TITLE
ASPEN-UMA
SATA_HDD CONN
SIZE A3
CODE CS
DOC. NUMBER Model_No
REV AX2
SHEET 50 OF 68
CHANGE by Drawer_Name
1-Dec-2004

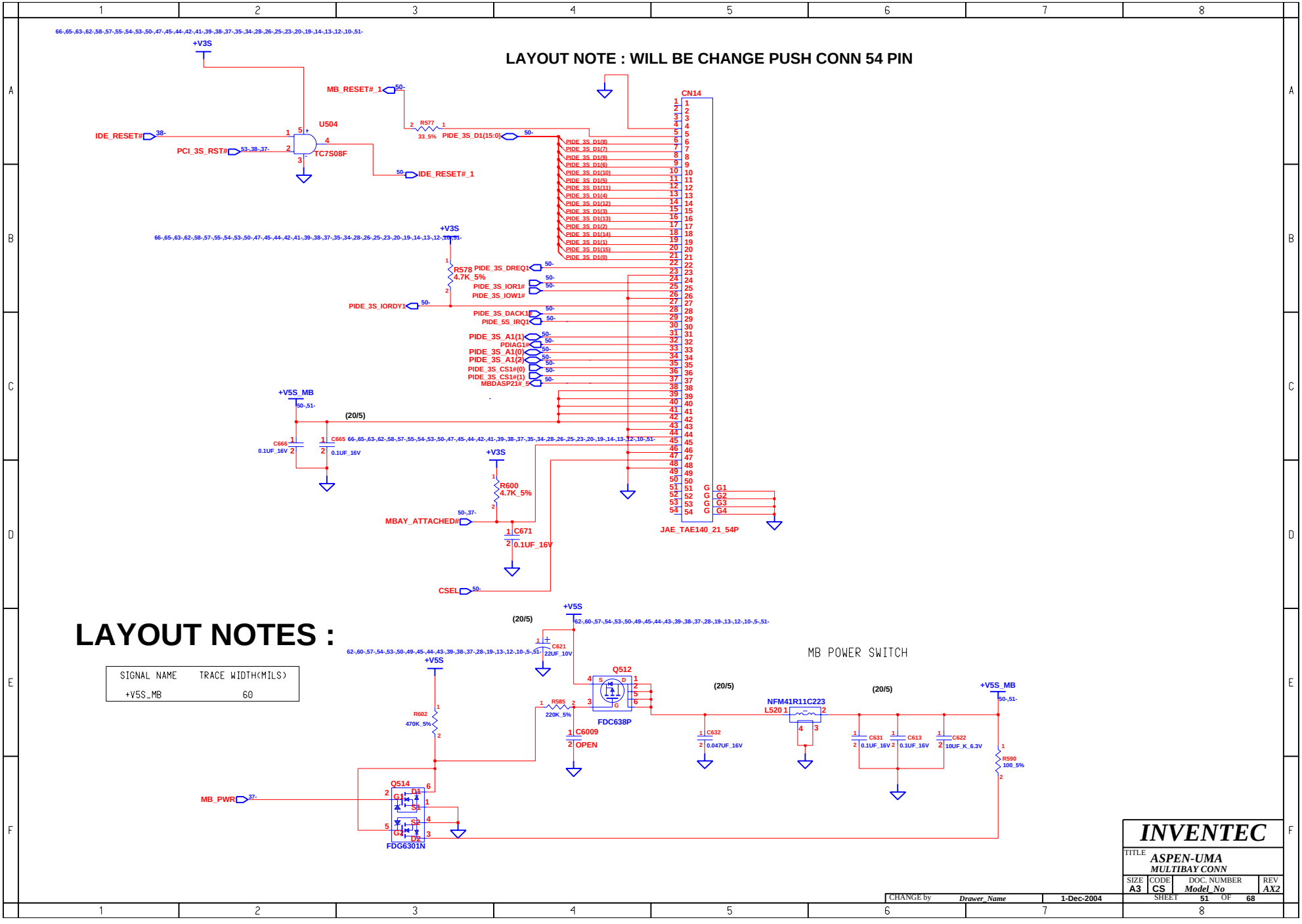

LAYOUT NOTES :

SIGNAL NAME	TRACE WIDTH(MILS)
+V5S_MB	60

INVENTEC

TITLE ASPEN-UMA
MULTIBAY CONN

SIZE	CODE	DOC. NUMBER	REV
A3	CS	Model_No	AX2

CHANGE by Drawer_Name 1-Dec-2004 SHEET 51 OF 68

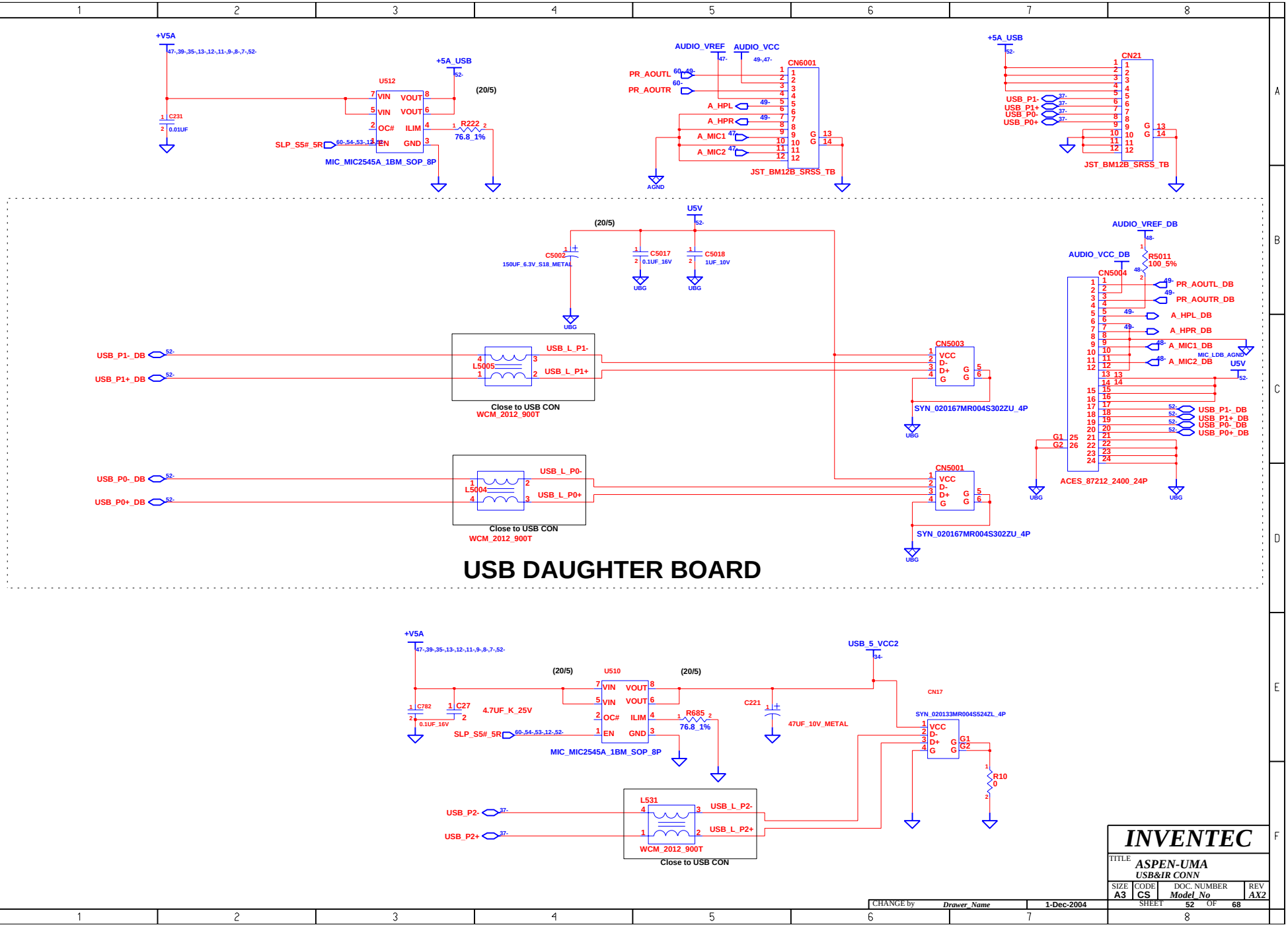

INVENTEC

TITLE ASPEN-UMA
USB&IR CONN

SIZE	CODE	DOC. NUMBER	REV
A3	CS	Model_No	AX2

SHEET 52 OF 68

CHANGE by	Drawer_Name	1-Dec-2004

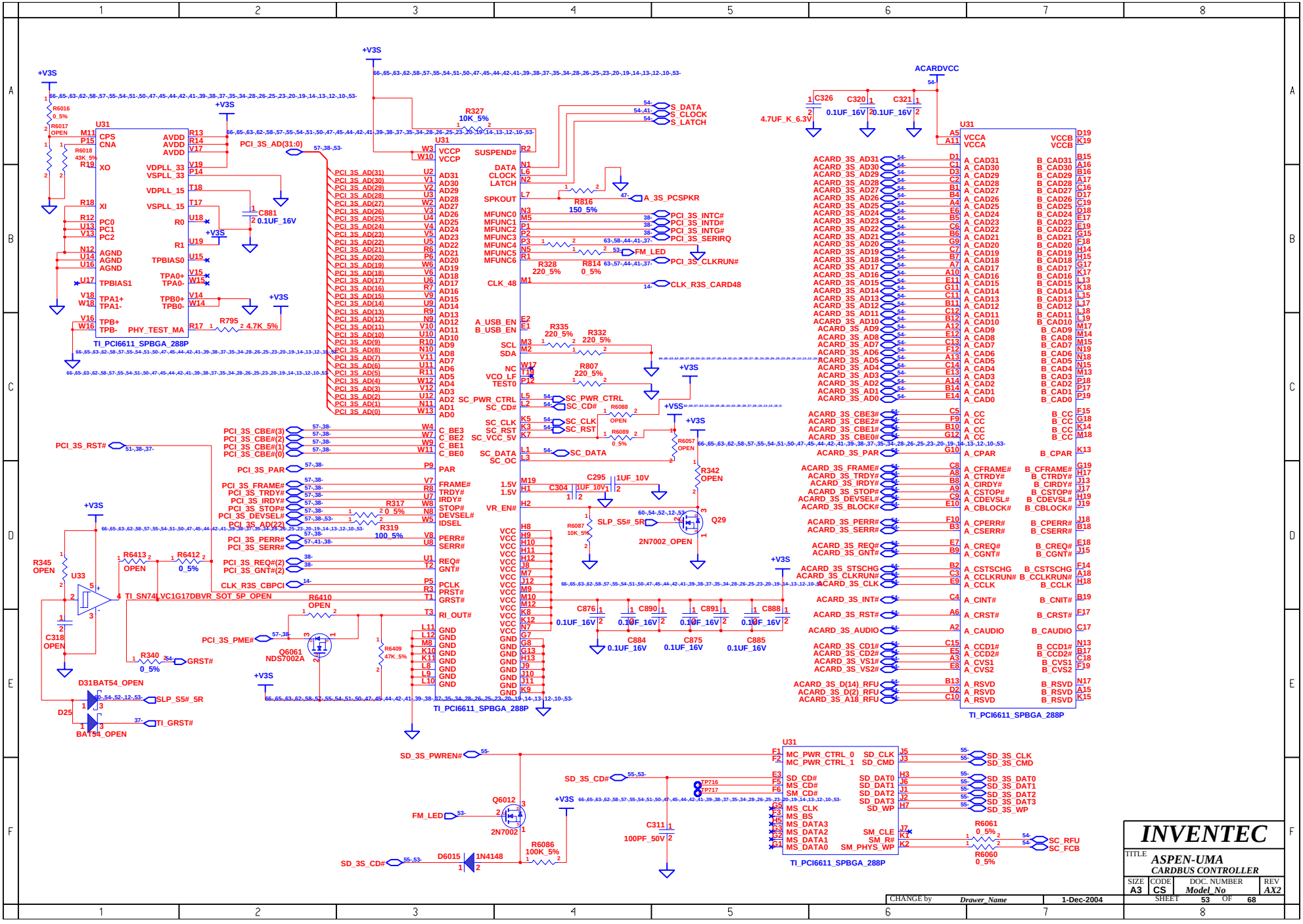
TI_PCI6611_SPBGA_288P
TI_PCI6611_SPBGA_288P
TI_PCI6611_SPBGA_288P
TI_PCI6611_SPBGA_288P
TI_SN74LVC1G17DBVR_SOT_5P_OPEN
INVENTEC
TITLE
ASPEN-UMA
CARDBUS CONTROLLER
SIZE A3
CODE CS
DOC. NUMBER Model_No
REV AX2
SHEET 53 OF 68
CHANGE by Drawer_Name
1-Dec-2004

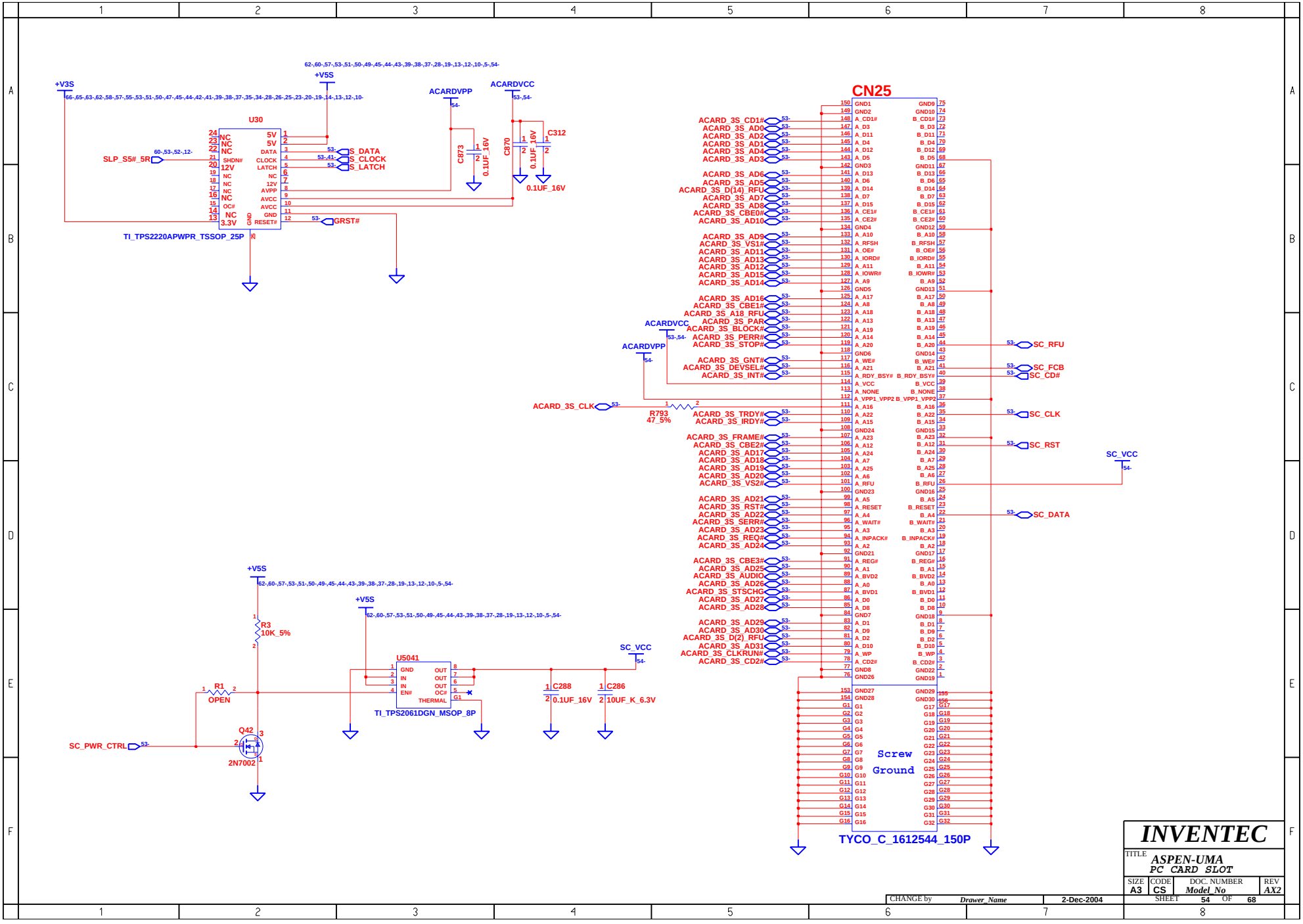
CN25
U30
TI_TPS2220APWPR_TSSOP_25P
U5041
TI_TPS2061DGN_MSOP_8P
TYCO_C_1612544_150P
Screw
Ground
+V3S
+V5S
ACARDVPP
ACARDVCC
SC_VCC
SLP_S5#_5R
S_DATA
S_CLOCK
S_LATCH
GRST#
C873
C870
C312
0.1UF_16V
R3
10K_5%
R1
OPEN
Q42
2N7002
SC_PWR_CTRL
C288
C286
10UF_K_6.3V
R793
47_5%
ACARD_3S_CLK
SC_RFU
SC_FCB
SC_CD#
SC_CLK
SC_RST
SC_DATA
INVENTEC
TITLE
ASPEN-UMA
PC CARD SLOT
SIZE A3
CODE CS
DOC. NUMBER Model_No
REV AX2
SHEET 54 OF 68
CHANGE by Drawer_Name
2-Dec-2004

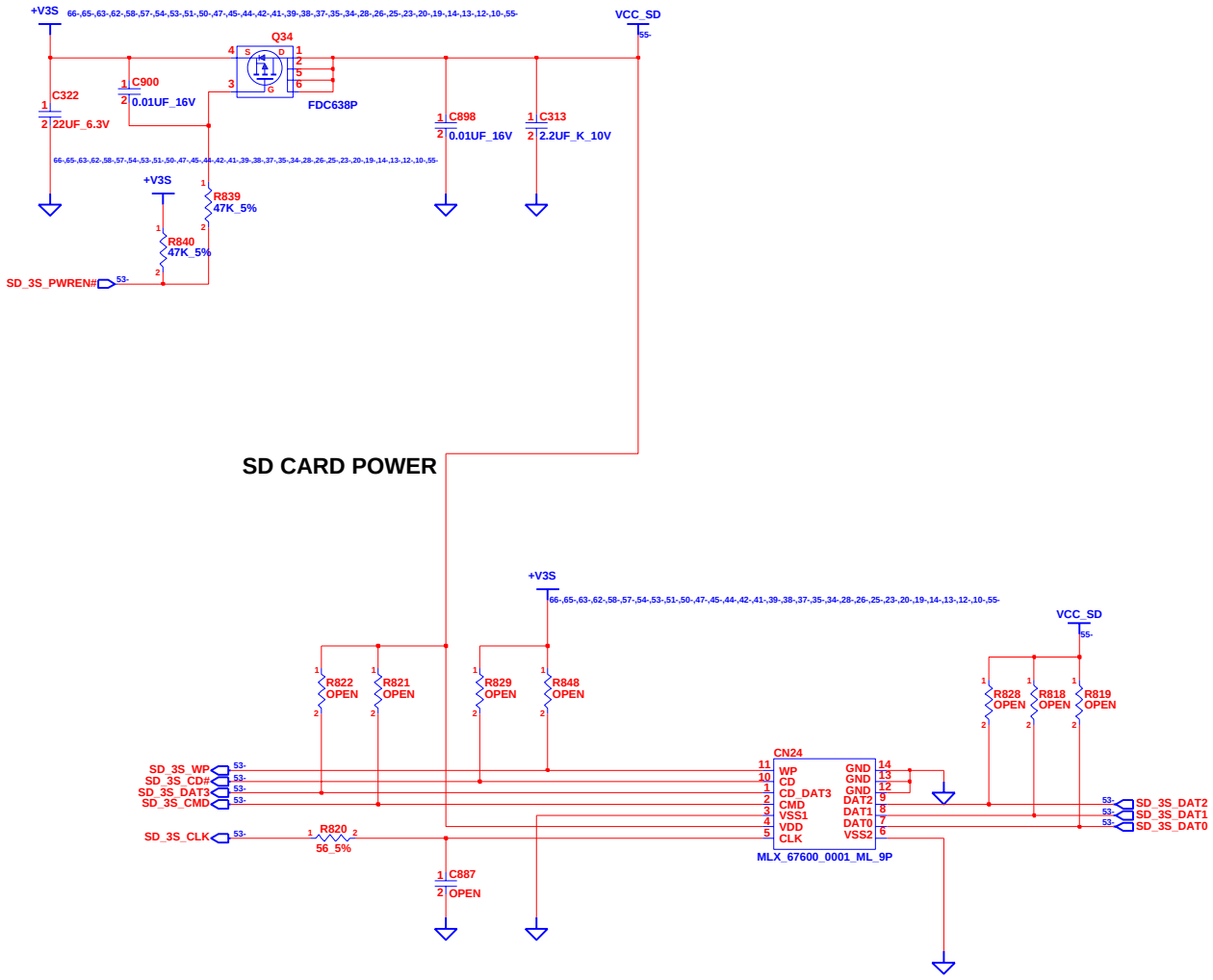

INVENTEC			
TITLE ASPEN-UMA SD CARD CONN			
SIZE A3	CODE CS	DOC. NUMBER Model_No	REV AX2
CHANGE by Drawer_Name	1-Dec-2004	SHEET 55 OF 68	

BLANK

INVENTEC				
TITLE ASPEN-UMA DAUGHTER BOARD CNN				
SIZE A3	CODE CS	DOC. NUMBER Model_No		REV AX2
CHANGE by Drawer_Name	30-Aug-2004	SHEET 56 OF 68		

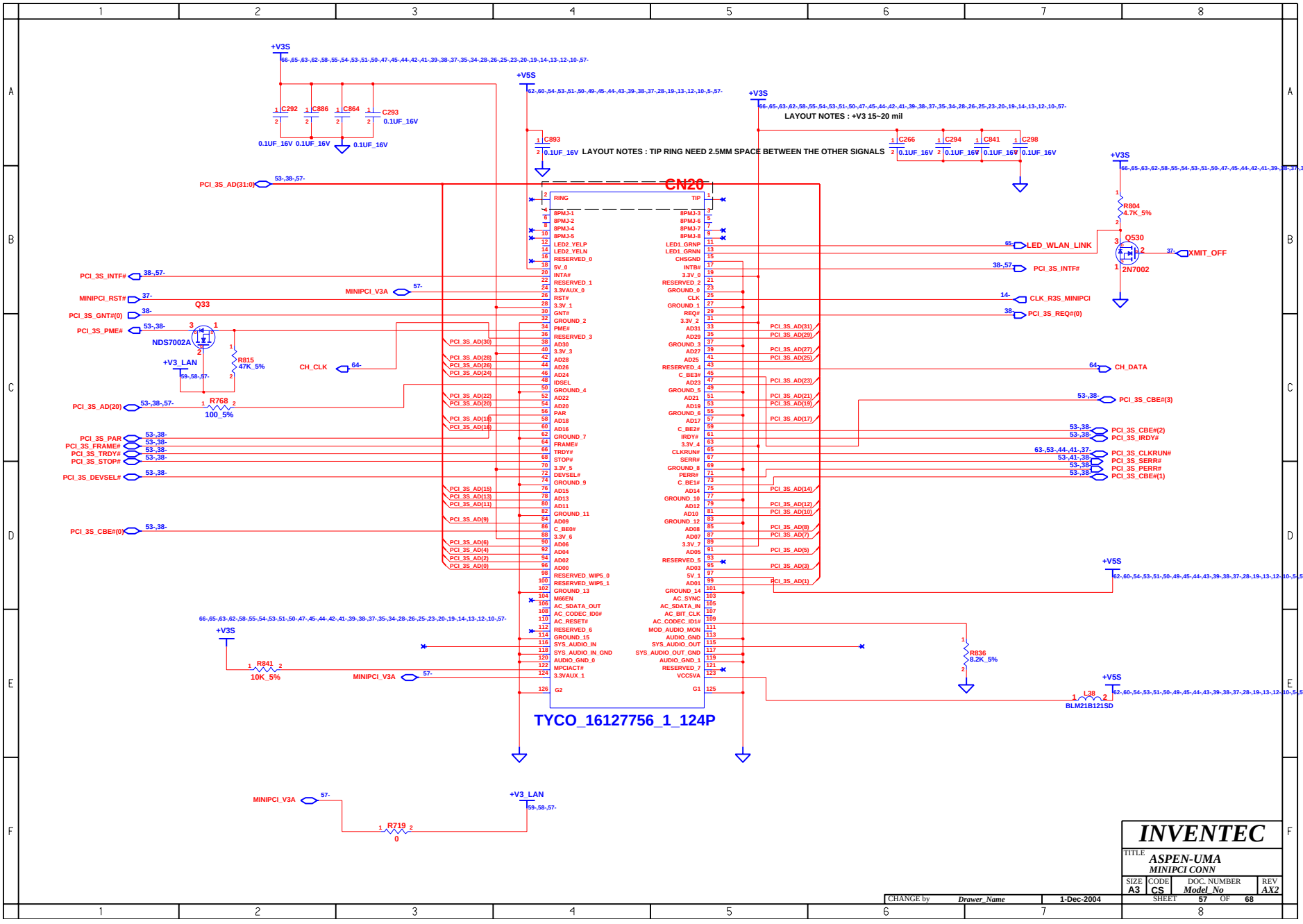
CN20
TYCO_16127756_1_124P
LAYOUT NOTES : +V3 15~20 mil
LAYOUT NOTES : TIP RING NEED 2.5MM SPACE BETWEEN THE OTHER SIGNALS
+V3S
+V5S
+V3_LAN
C292
C886
C864
C293
0.1UF_16V
C893
C266
C294
C841
C298
PCI_3S_AD(31:0)
PCI_3S_INTF#
MINIPCI_RST#
PCI_3S_GNT#(0)
PCI_3S_PME#
PCI_3S_AD(20)
PCI_3S_PAR
PCI_3S_FRAME#
PCI_3S_TRDY#
PCI_3S_STOP#
PCI_3S_DEVSEL#
PCI_3S_CBE#(0)
MINIPCI_V3A
CH_CLK
Q33
NDS7002A
R815
47K_5%
R768
100_5%
R841
10K_5%
R719
0
R804
4.7K_5%
Q530
2N7002
LED_WLAN_LINK
XMIT_OFF
CLK_R3S_MINIPCI
PCI_3S_REQ#(0)
CH_DATA
PCI_3S_CBE#(3)
PCI_3S_CBE#(2)
PCI_3S_IRDY#
PCI_3S_CLKRUN#
PCI_3S_SERR#
PCI_3S_PERR#
PCI_3S_CBE#(1)
R836
8.2K_5%
L38
BLM21B121SD
INVENTEC
TITLE
ASPEN-UMA
MINIPCI CONN
SIZE A3
CODE CS
DOC. NUMBER Model_No
REV AX2
SHEET 57 OF 68
CHANGE by Drawer_Name
1-Dec-2004

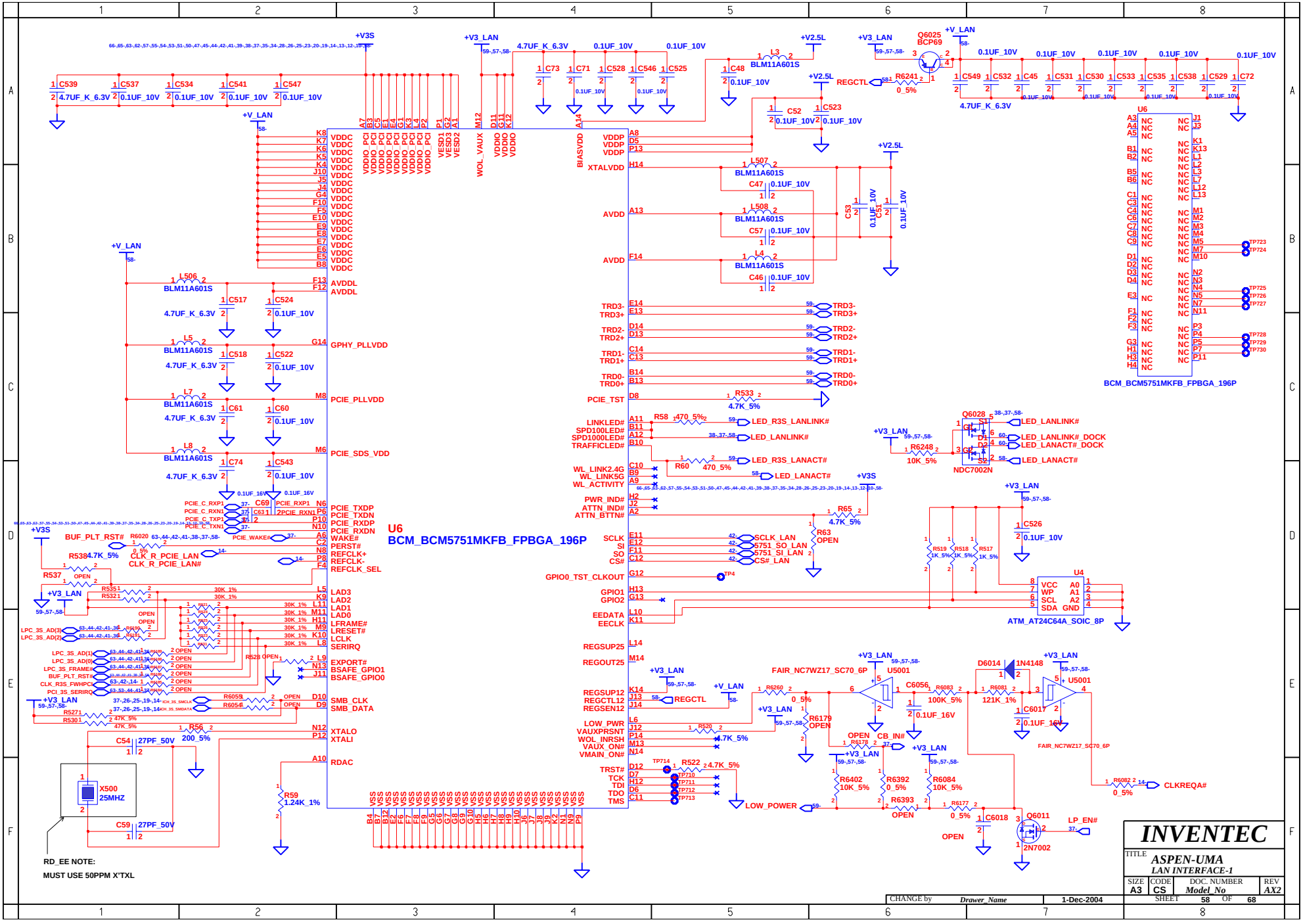
U6
BCM_BCM5751MKFB_FPBGA_196P
U4
ATM_AT24C64A_SOIC_8P
U5001
FAIR_NC7WZ17_SC70_6P
Q6025
BCP69
Q6028
NDC7002N
Q6011
2N7002
X500
25MHZ
RD_EE NOTE:
MUST USE 50PPM X'TXL
INVENTEC
TITLE
ASPEN-UMA
LAN INTERFACE-1
SIZE A3
CODE CS
DOC. NUMBER Model_No
REV AX2
SHEET 58 OF 68
CHANGE by Drawer_Name
1-Dec-2004

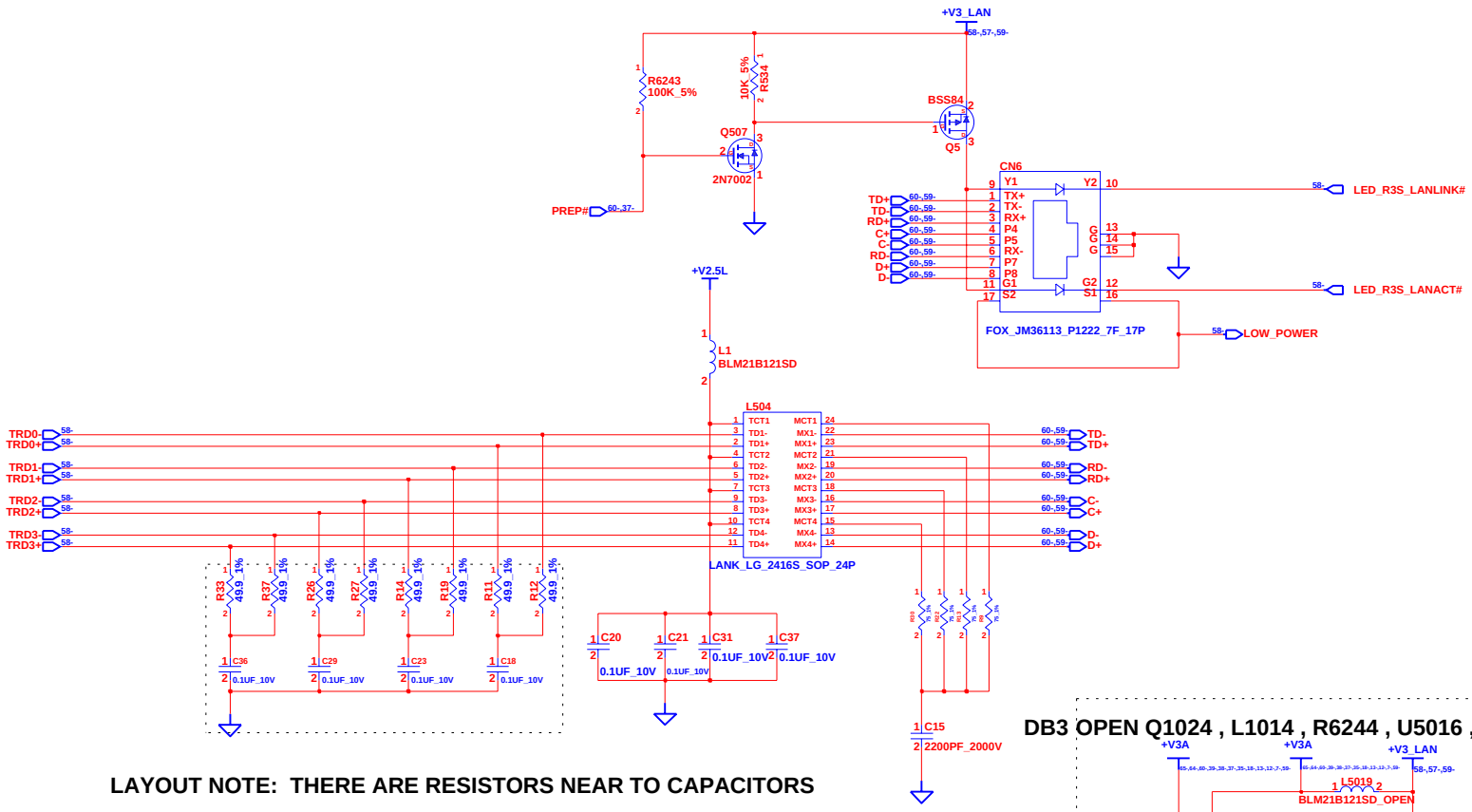

LAYOUT NOTE: THERE ARE RESISTORS NEAR TO CAPACITORS

DB3 OPEN Q1024 , L1014 , R6244 , U5016 , Q6026 , R6245 .

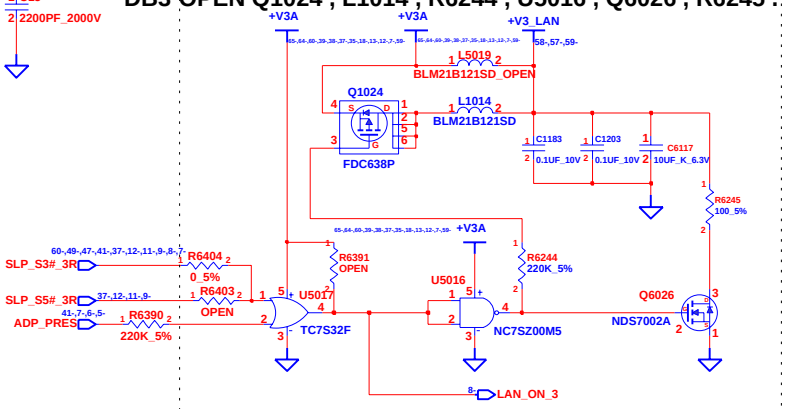

SI2 INSTALL Q1024 , L1014 , R6244 , U5016 , Q6026 , R6245 .

R6391 OPEN L5019

INVENTEC

TITLE ASPEN-UMA
LAN RJ45 CONN

SIZE	CODE	DOC. NUMBER	REV
A3	CS	Model_No	AX2

SHEET 59 OF 68

CHANGE by	Drawer_Name	4-Nov-2004

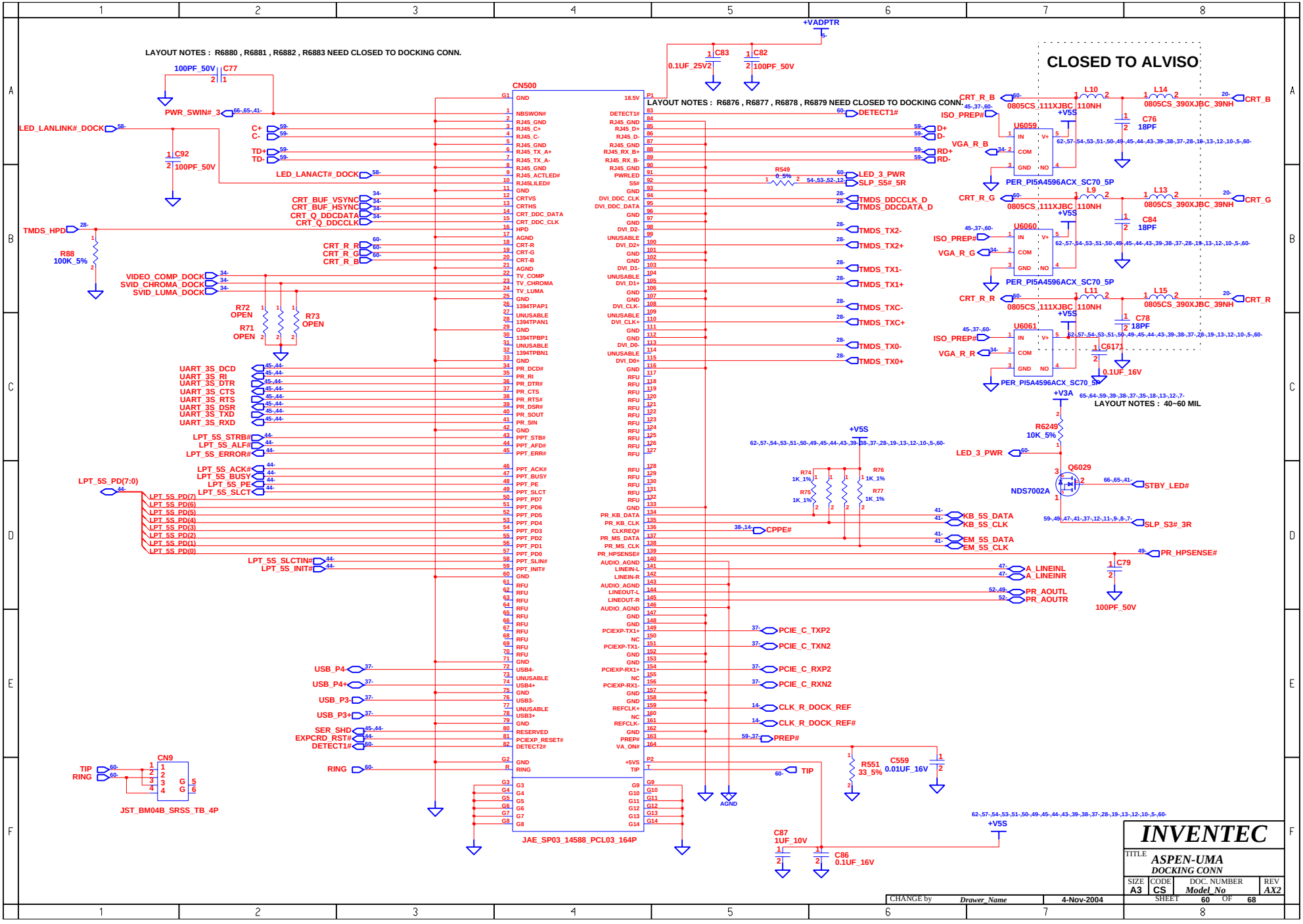
LAYOUT NOTES : R6880 , R6881 , R6882 , R6883 NEED CLOSED TO DOCKING CONN.
LAYOUT NOTES : R6876 , R6877 , R6878 , R6879 NEED CLOSED TO DOCKING CONN.
CLOSED TO ALVISO
CN500
JAE_SP03_14588_PCL03_164P
CN9
JST_BM04B_SRSS_TB_4P
+VADPTR
C83 0.1UF_25V2
C82 100PF_50V
C77 100PF_50V
C92 100PF_50V
PWR_SWIN#_3
LED_LANLINK#_DOCK
LED_LANACT#_DOCK
TMDS_HPD
R88 100K_5%
VIDEO_COMP_DOCK
SVID_CHROMA_DOCK
SVID_LUMA_DOCK
R72 OPEN
R71 OPEN
R73 OPEN
UART_3S_DCD
UART_3S_RI
UART_3S_DTR
UART_3S_CTS
UART_3S_RTS
UART_3S_DSR
UART_3S_TXD
UART_3S_RXD
LPT_5S_STRB#
LPT_5S_ALF#
LPT_5S_ERROR#
LPT_5S_ACK#
LPT_5S_BUSY
LPT_5S_PE
LPT_5S_SLCT
LPT_5S_PD(7:0)
LPT_5S_SLCTIN#
LPT_5S_INIT#
USB_P4-
USB_P4+
USB_P3-
USB_P3+
SER_SHD
EXPCRD_RST#
DETECT1#
RING
TIP
DETECT1#
LED_3_PWR
SLP_S5#_5R
TMDS_DDCCLK_D
TMDS_DDCDATA_D
TMDS_TX2-
TMDS_TX2+
TMDS_TX1-
TMDS_TX1+
TMDS_TXC-
TMDS_TXC+
TMDS_TX0-
TMDS_TX0+
KB_5S_DATA
KB_5S_CLK
CPPE#
EM_5S_DATA
EM_5S_CLK
PR_HPSENSE#
A_LINEINL
A_LINEINR
PR_AOUTL
PR_AOUTR
PCIE_C_TXP2
PCIE_C_TXN2
PCIE_C_RXP2
PCIE_C_RXN2
CLK_R_DOCK_REF
CLK_R_DOCK_REF#
PREP#
TIP
R551 33_5%
C559 0.01UF_16V
C87 1UF_10V
C86 0.1UF_16V
+V5S
CRT_R_B
CRT_R_G
CRT_R_R
ISO_PREP#
VGA_R_B
VGA_R_G
VGA_R_R
U6059
U6060
U6061
PER_PI5A4596ACX_SC70_5P
L10 0805CS_111XJBC_110NH
L14 0805CS_390XJBC_39NH
L9 0805CS_111XJBC_110NH
L13 0805CS_390XJBC_39NH
L11 0805CS_111XJBC_110NH
L15 0805CS_390XJBC_39NH
C76 18PF
C84 18PF
C78 18PF
C617 0.1UF_16V
+V3A
R6249 10K_5%
Q6029 NDS7002A
STBY_LED#
SLP_S3#_3R
C79 100PF_50V
LAYOUT NOTES : 40~60 MIL
INVENTEC
TITLE ASPEN-UMA DOCKING CONN
SIZE A3
CODE CS
DOC. NUMBER Model_No
REV AX2
SHEET 60 OF 68
CHANGE by Drawer_Name
4-Nov-2004

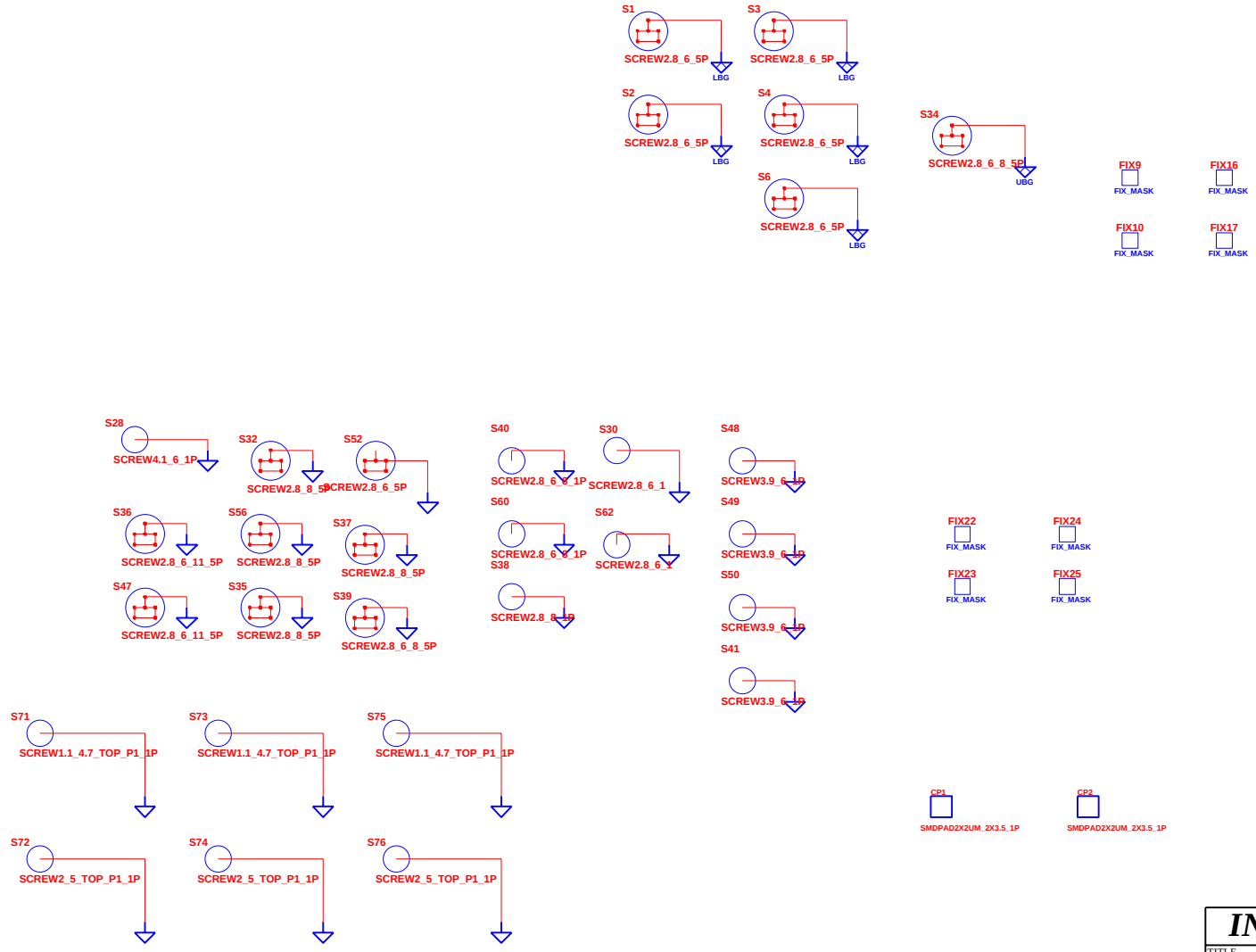

INVENTEC

TITLE **ASPEN-UMA**
SCREW

SIZE	CODE	DOC. NUMBER	REV
A3	CS	Model_No	AX2

SHEET 61 OF 68

CHANGE by Drawer_Name 15-Oct-2004

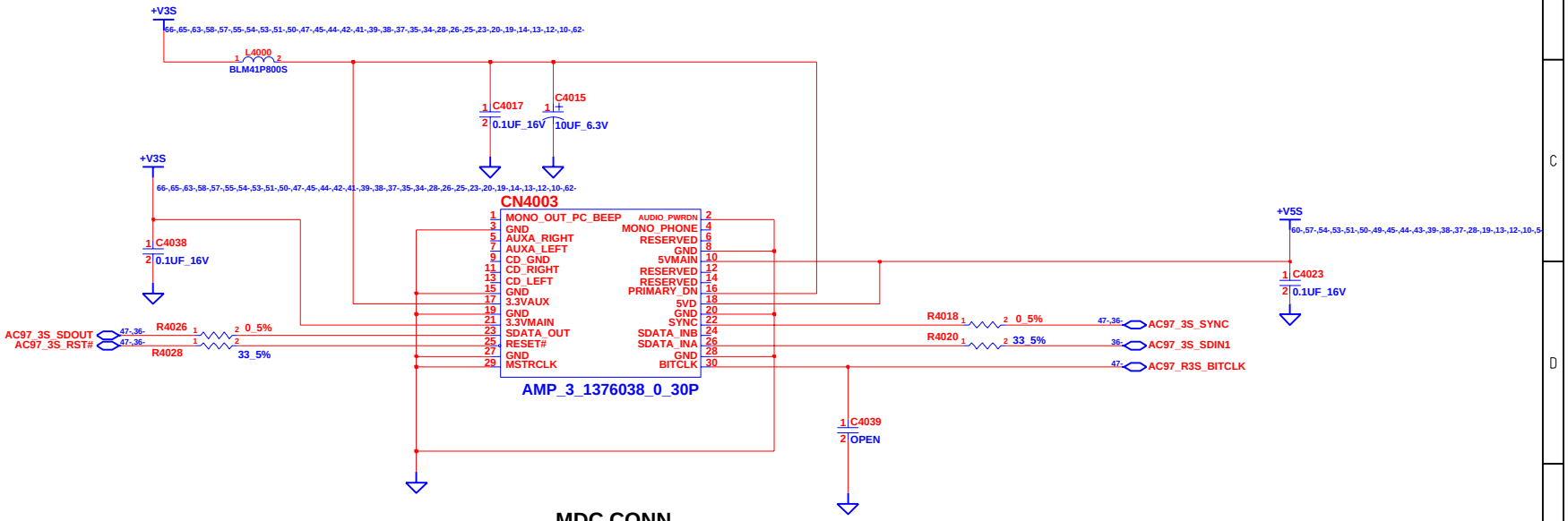

MDC CONN

CHANGE by	Drawer_Name	1-Dec-2004	

INVENTEC

TITLE *ASPEN-UMA*
MDC CONN

SIZE	CODE	DOC. NUMBER	REV
A3	CS	Model_No	AX2

SHEET 62 OF 68

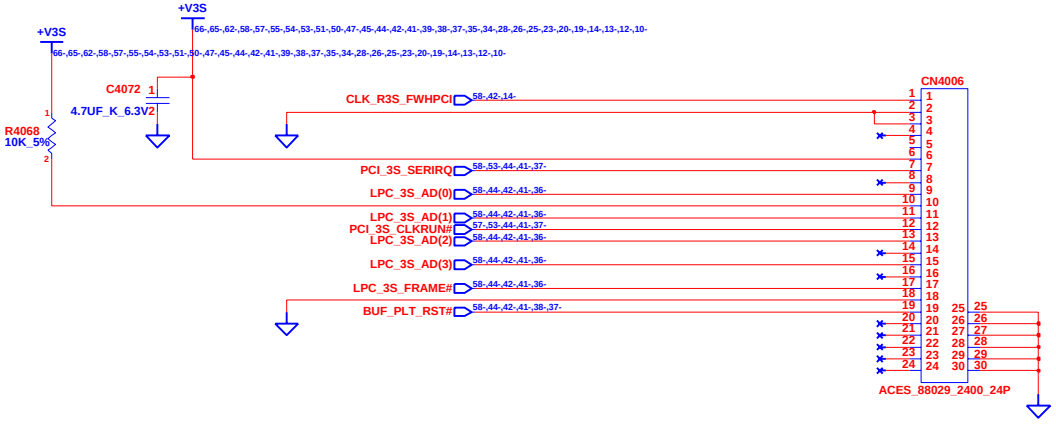

AMP 20PIN CONNECTOR
MOTHERBOARD SIDE
ACES_88029_2400

CHANGE by	*Drawer_Name*	30-Aug-2004	

INVENTEC

TITLE *ASPEN-UMA*
TCPA

SIZE	CODE	DOC. NUMBER	REV
A3	CS	*Model_No*	*AX2*

SHEET 63 OF 68

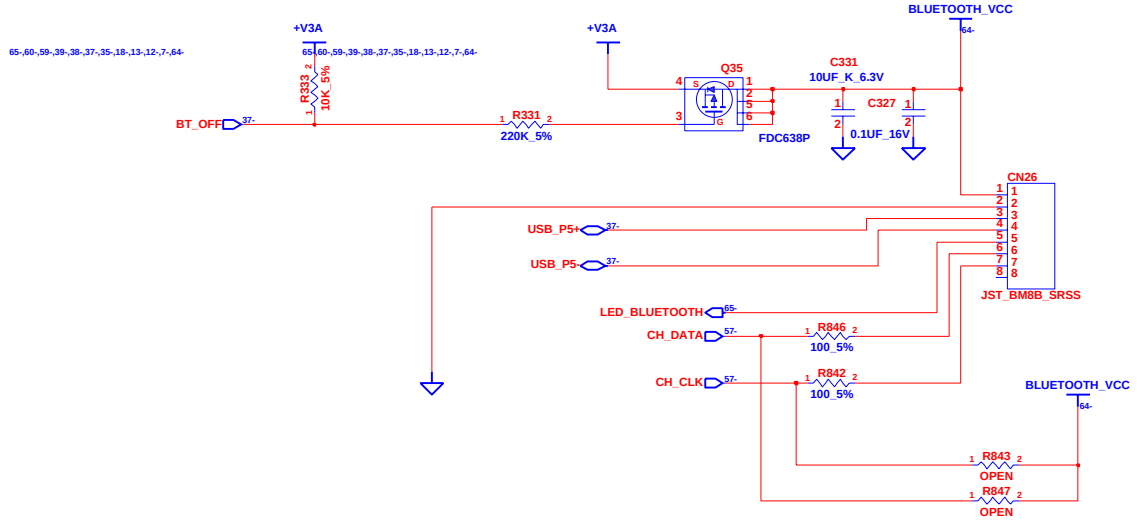

INVENTEC

TITLE ASPEN-UMA
BLUETOOTH

SIZE	CODE	DOC. NUMBER	REV
A3	CS	Model_No	AX2

CHANGE by Drawer_Name 30-Aug-2004 SHEET 64 OF 68

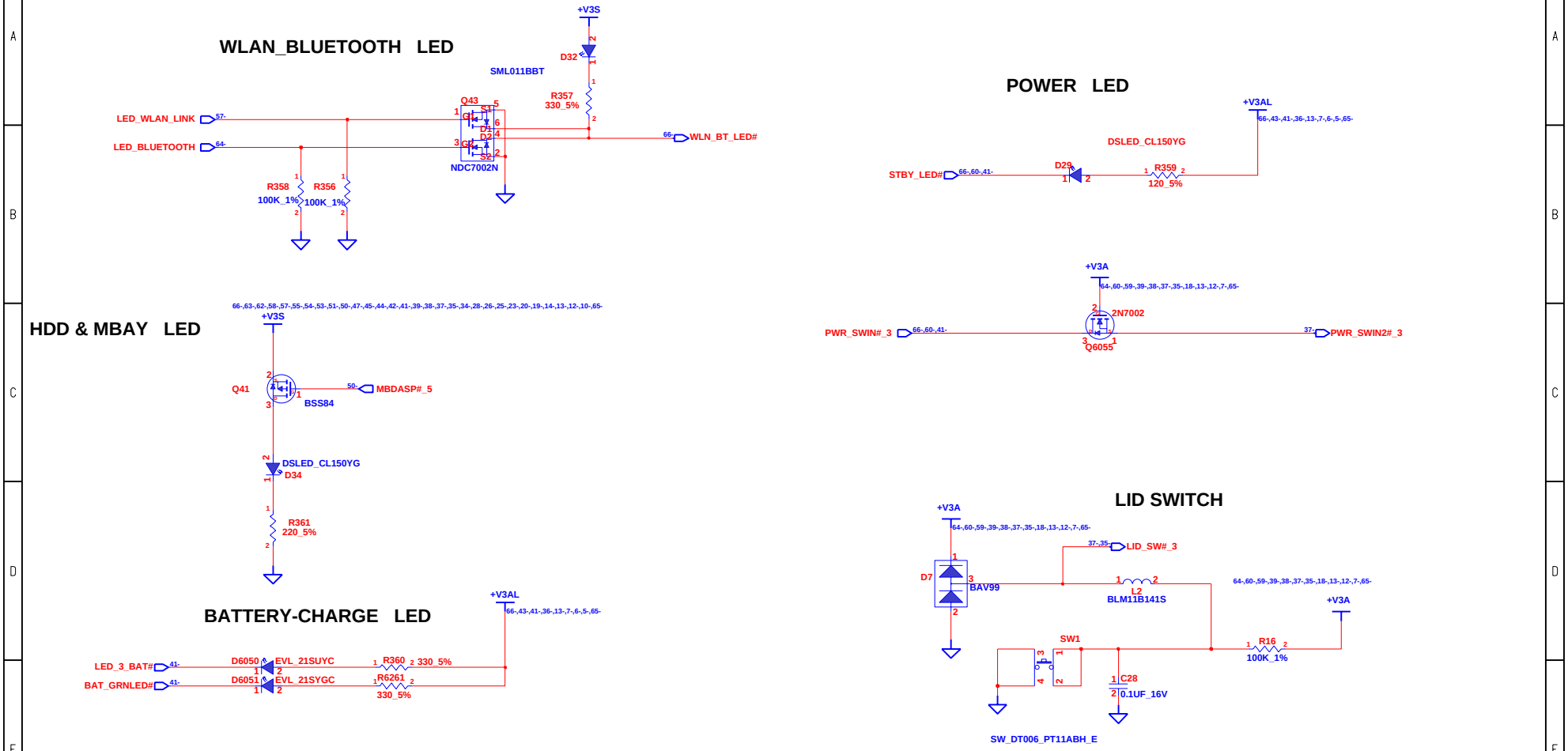

CHANGE by	Drawer_Name	13-Dec-2004	

INVENTEC

TITLE *ASPEN-UMA*
LED

SIZE	CODE	DOC. NUMBER	REV
A3	CS	*Model_No*	*AX2*

SHEET 65 OF 68

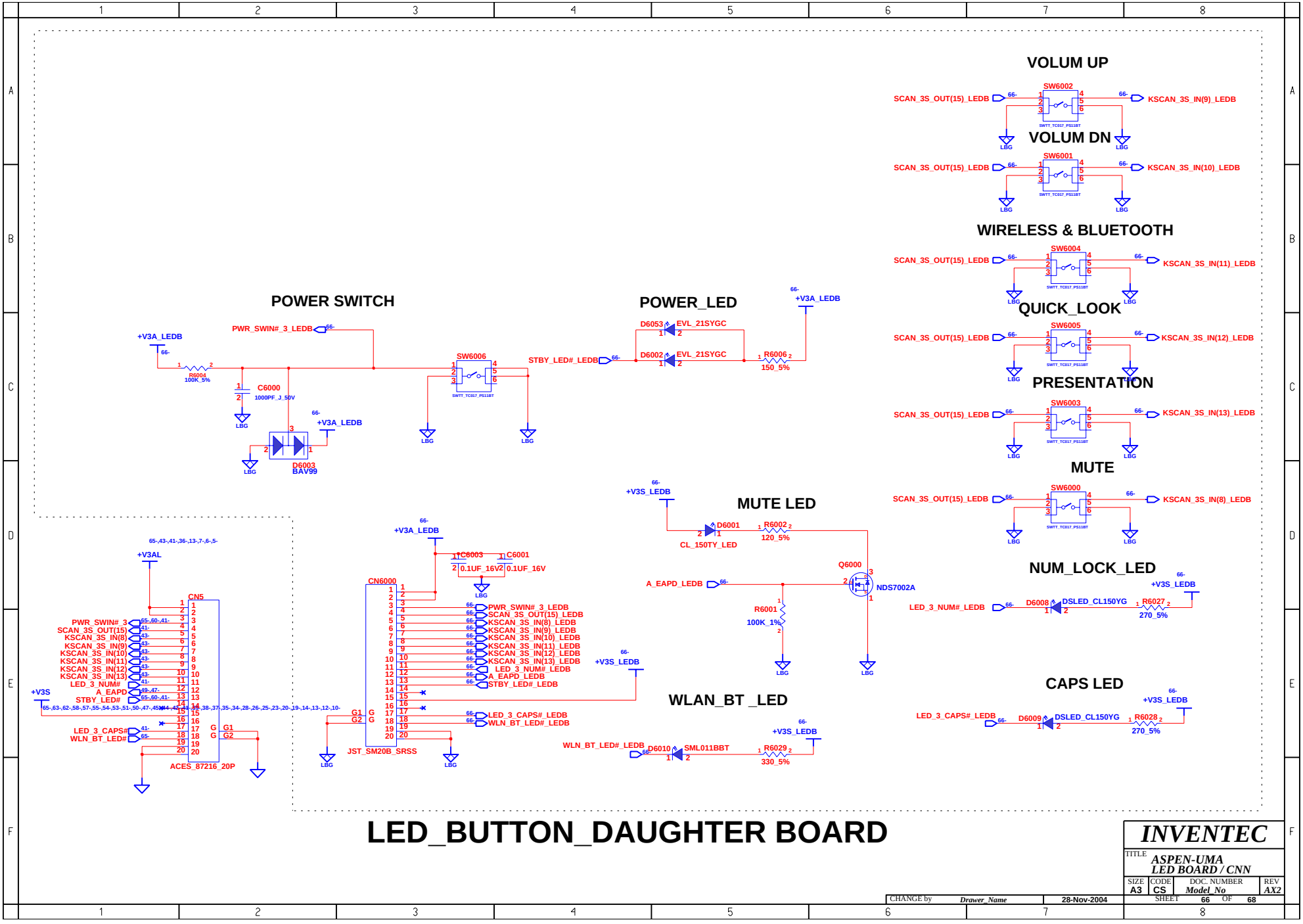

LED_BUTTON_DAUGHTER BOARD

CHANGE by	Drawer_Name	28-Nov-2004	

INVENTEC

TITLE: ASPEN-UMA LED BOARD / CNN

SIZE	CODE	DOC. NUMBER	REV
A3	CS	Model_No	AX2

SHEET 66 OF 68

LCD CABLE

1	
2	+V3S
3	
4	+V3S
5	
6	+V3S
7	
8	LCM_DDCPCLK
9	
10	LCM_DDCPDATA
11	LVDS_TXDL0-
12	LVDS_TXDL0+
13	LVDS_TXDL1-
14	LVDS_TXDL1+
15	LVDS_TXDL2-
16	LVDS_TXDL2+
17	LVDS_TXCL-
18	LVDS_TXCL+
19	GND
20	GND
21	LVDS_TXDU0-
22	LVDS_TXDU0+
23	LVDS_TXDU1-
24	LVDS_TXDU1+
25	LVDS_TXDU2-
26	LVDS_TXDU2+
27	LVDS_TXCU+
28	LVDS_TXCU-
29	GND
30	GND
31	
32	ALS_EN
33	+V5A
34	+V5A
35	+V5A
36	INV_PWM_3
37	+V3S
38	GND
39	GND
40	GND

MIC CABLE

1	INT_MIC_CN_DB
2	GND

SPEAKER CABLE

1	SPK_OUT_L-
2	SPK_OUT_L+
3	SPK_OUT_R-
4	SPK_OUT_R+

BLUETOOTH CABLE

1	BLUETOOTH_VCC
2	GND
3	GND
4	USB_P5+
5	USB_P5-
6	LED_BLUETOOTH
7	CH_DATA
8	CH_CLK

keyboard

1	
2	
3	
4	SCAN_3S_OUT(9)
5	KSCAN_3S_IN(9)
6	KSCAN_3S_IN(11)
7	KSCAN_3S_IN(13)
8	SCAN_3S_IN(7)
9	KSCAN_3S_IN(6)
10	KSCAN_3S_IN(5)
11	SCAN_3S_OUT(1)
12	SCAN_3S_OUT(10)
13	SCAN_3S_OUT(6)
14	SCAN_3S_OUT(7)
15	SCAN_3S_OUT(4)
16	SCAN_3S_OUT(8)
17	SCAN_3S_OUT(3)
18	KSCAN_3S_IN(3)
19	KSCAN_3S_IN(1)
20	KSCAN_3S_IN(2)
21	KSCAN_3S_IN(4)
22	KSCAN_3S_IN(0)
23	KSCAN_3S_IN(10)
24	KSCAN_3S_IN(12)
25	KSCAN_3S_IN(8)
26	KSCAN_3S_IN(14)
27	SCAN_3S_OUT(5)
28	SCAN_3S_OUT(2)
29	SCAN_3S_OUT(0)
30	SCAN_3S_OUT(11)

PATA&SATA

1	PCI_3S_RST#
2	GND
3	PIDE_3S_D(7)
4	PIDE_3S_D(8)
5	PIDE_3S_D(6)
6	PIDE_3S_D(9)
7	PIDE_3S_D(5)
8	PIDE_3S_D(10)
9	PIDE_3S_D(4)
10	PIDE_3S_D(11)
11	PIDE_3S_D(3)
12	PIDE_3S_D(12)
13	PIDE_3S_D(2)
14	PIDE_3S_D(13)
15	PIDE_3S_D(1)
16	PIDE_3S_D(14)
17	PIDE_3S_D(0)
18	PIDE_3S_D(15)
19	GND
20	
21	PIDE_3S_DREQ
22	GND
23	PIDE_3S_IOW#
24	GND
25	PIDE_3S_IOR#
26	GND
27	PIDE_3S_IORDY
28	GND
29	PIDE_3S_DACK#
30	GND
31	PIDE_3S_IRQ
32	GND
33	PIDE_3S_A(1)
34	GND
35	PIDE_3S_A(0)
36	PIDE_3S_A(2)
37	PIDE_3S_CS#(0)
38	PIDE_3S_CS#(1)
39	MBDASP#_5
40	+V5S
41	+V5S
42	+V5S
43	+V5S
44	SATA_C_TXP0
45	SATA_C_TXN0
46	+V3S
47	+V3S
48	+V3S
49	SATA_C_RXN0
50	SATA_C_RXP0

USB CABLE

1	+5A_USB
2	+5A_USB
3	+5A_USB
4	+5A_USB
5	USB_P1-
6	USB_P1+
7	USB_P0-
8	USB_P0+
9	GND
10	GND
11	GND
12	GND

AUDIO CABLE

1	PR_AOUTL_DB
2	AUDIO_VCC_DB
3	PR_AOUTR_DB
4	AUDIO_VREF_DB
5	A_HPL_DB
6	GND
7	A_HPR_DB
8	GND
9	A_MIC1_DB
10	GND
11	A_MIC2_DB
12	GND

SERIAL CABLE

1	
2	
3	RS232_R1IN
4	RS232_R2IN
5	RS232_R3IN
6	RS232_R4IN
7	RS232_R5IN
8	RS232_T1OUT
9	RS232_T2OUT
10	RS232_T3OUT
11	GND
12	GND

SW/B CABLE

1	+V3A
2	+V3A
3	PWR_SWIN#_3
4	SCAN_3S_OUT(15)
5	KSCAN_3S_IN(8)
6	KSCAN_3S_IN(9)
7	KSCAN_3S_IN(10)
8	KSCAN_3S_IN(11)
9	KSCAN_3S_IN(12)
10	KSCAN_3S_IN(13)
11	LED_3_NUM#
12	A_EAPD
13	LED_3_PWR#
14	STANDBY_SW#
15	SLP_S3_5R
16	QUICK_LOCK#
17	WLN_BT_LED#
18	GND
19	GND
20	GND

TOUCHPAD CABLE

1	+V5S
2	+V5S
3	IM_5S_DATA
4	IM_5S_CLK
5	GND
6	GND
7	
8	
9	
10	
11	
12	

POINT STICK

1	+V5S
2	
3	GND
4	
5	
6	
7	
8	

INVENTEC			
TITLE ASPEN-UMA CABLE			
SIZE A3	CODE CS	DOC. NUMBER Model_No	REV AX2
CHANGE by Drawer_Name	30-Aug-2004	SHEET 67 OF 68	

IEC / HP Aspen_UMA MV Schematic Changes

December 10, 2004

HP Confidential Information

Open Items

Item #	Project	Component / Subsection	PG. #	Description of Requested Change	Date Open+F7 / Closed	Requested By / Owner	Status / Aspen	Aspen FBK/Date
1	UMA	V2.5L	8	Improve the RGB signal waveform on CRT monitor R6247 from 909k change to 1M_1% 60130B10049T	2004/11/17	IEC	Open	sch1117 done
2	UMA	ALVISO	23	Improve the S-Video & RGB signal waveform for S-Video & RGB monitor. 1.L5014 pin 1 C6059 change to 47UF capacitor (OXi cap). 2.L5015 pin 1 C6063 change to 47UF capacitor (OXi cap.) 3.C216 change to 47UF capacitor (OXi cap.) 4.Remove C6068.	2004/11/29	IEC	Open	sch1129 done
3	UMA	Power	11	Change U6064 +V0.9 limit regulator circuit for DDR2. Remove R640 , C734 , C195 , C735 , C196 , C193 add C6176 1uf , C6172 , C6173 , C6174 , C6175 10uf.	2004/11/29	HP	Open	sch1129 done
4	UMA	LED	66	1.Add LED D6053 EVL_21SYGC for machine ID recommend. 2.Change D6002 to EVL_21SYGC.	2004/11/29	HP	Open	sch1129 done
5	UMA	Switch Board	66	Change switch Board trace from Top side & Bottom side to internal layer a surface used GND to Cover it this change for safty ESD recommend.	2004/11/29	IEC	Open	sch1129 done
6	UMA	serial Board	45	Change Serial Board trace from Top side & Bottom side to internal layer a surface used GND to cover it this change for Safty ESD recommend.	2004/11/29	IEC	Open	sch1129 done
7	UMA	Power	7	Move D6048 , C6162 , R6283 placement this change for machine recommend.	2004/11/29	IEC	Open	sch1129 done
8	UMA	ICH-6	37	Change C882,C883 from 10pF to 18pF for RTC accuracy	2004/11/29	IEC	Open	sch1129 done
9	UMA	ALVISO ICH-6	23 23 36	For EMI recommend: 1.Add C6188,C6189,C6190 0.01uF_16V connect +V1.5S for EMI improve +V1.5S power plane. 2.Add C6185,C6186,C6187 0.01uF_16V connect +V1.8 for EMI improve +V1.8 power plane 3.Add C6191 0.01uF_16V connect CN7 RTCBAT to improve EMI noise.	2004/12/2	IEC	Open	sch1202 done
10	UMA	Power	11	Add two power via 30_16 on +V0.9S power rail.	2004/12/3	IEC	open	sch1203 done
11	UMA	Power	13	Aspen UMA uses a 2.5V rail,R6150 should be changed to 107K_1%, and R6152 should be changed to 57.6K_1%.	2004/12/10	HP	open	sch1210 done