DDD Discrete

GDDR1

PV Build

2007.06.21

DATE	CHANGE NO.	REV

	EE	DATE	POWER	DATE
DRAWER				
DESIGN				
CHECK				
RESPONSIBLE				

SIZE = 3 VER :

FILE NAME : XXXX-XXXXXX-XX

P/N XXXXXXXXXXXX

INVENTEC

TITLE *DDD-Discrete*

SIZE	CODE	DOC. NUMBER	REV
A3	CS	*1310A21516*	*A01*

SHEET 1 OF 53

TABLE OF CONTENTS

PAGE
5- DC& BATTERY CHARGER
6- SELECT & BATTERY CONN
7- SYSTEM POWER(3V/5V)
8- SYSTEM POWER(+V1.8/+V1.25S)
9- GRAPHIC POWER(+VGFX_CORE)
10- SYSTEM POWER(+VCCP/+V1.5S)
11- CPU POWER(VCC_CORE)
12- DDR TERMINATION VOLTAGE
13- POWER(SLEEP)
14- POWER(SEQUENCE)

PAGE
15- CLOCK_GENERATOR
16- MEROM-1
17- MEROM-2
18- MEROM-3
19- THERMAL&FAN CONTROLLER
20- Crestline-1
21- Crestline-2
22- Crestline-3
23- Crestline-4
24- Crestline-5
25- Crestline-6
26- DDR2-DIMM0
27- DDR2-DIMM1
28- DDR2-DAMPING
29- VGA CONN
30- LCM CONN
31- ICH8-1
32- ICH8-2
33- ICH8-3
34- ICH8-4
35- ICH8-5

PAGE
36- SYSTEM BIOS&ODD EXTEND/B
37- HDD&ODD CONN
38- USB CONN
39- KBC
40- KB&TP CONN
41- AUDIO CODEC
42- MDC CONN & AUDIO JACK
43- NIC 10/100- CONTROLLER
44- NIC 10/100- RJ45 CONN
45- MINICARD CONN & BLUETOOTH
46- NEW CARD & SD/MMC
47- LED & BUTTON
48- SCREW
49- ATI M64S-1
50- ATI M64S-2
51- ATI M64S-3
52- ATI M64S-4
53- VIDEO RAM(GDDR1)

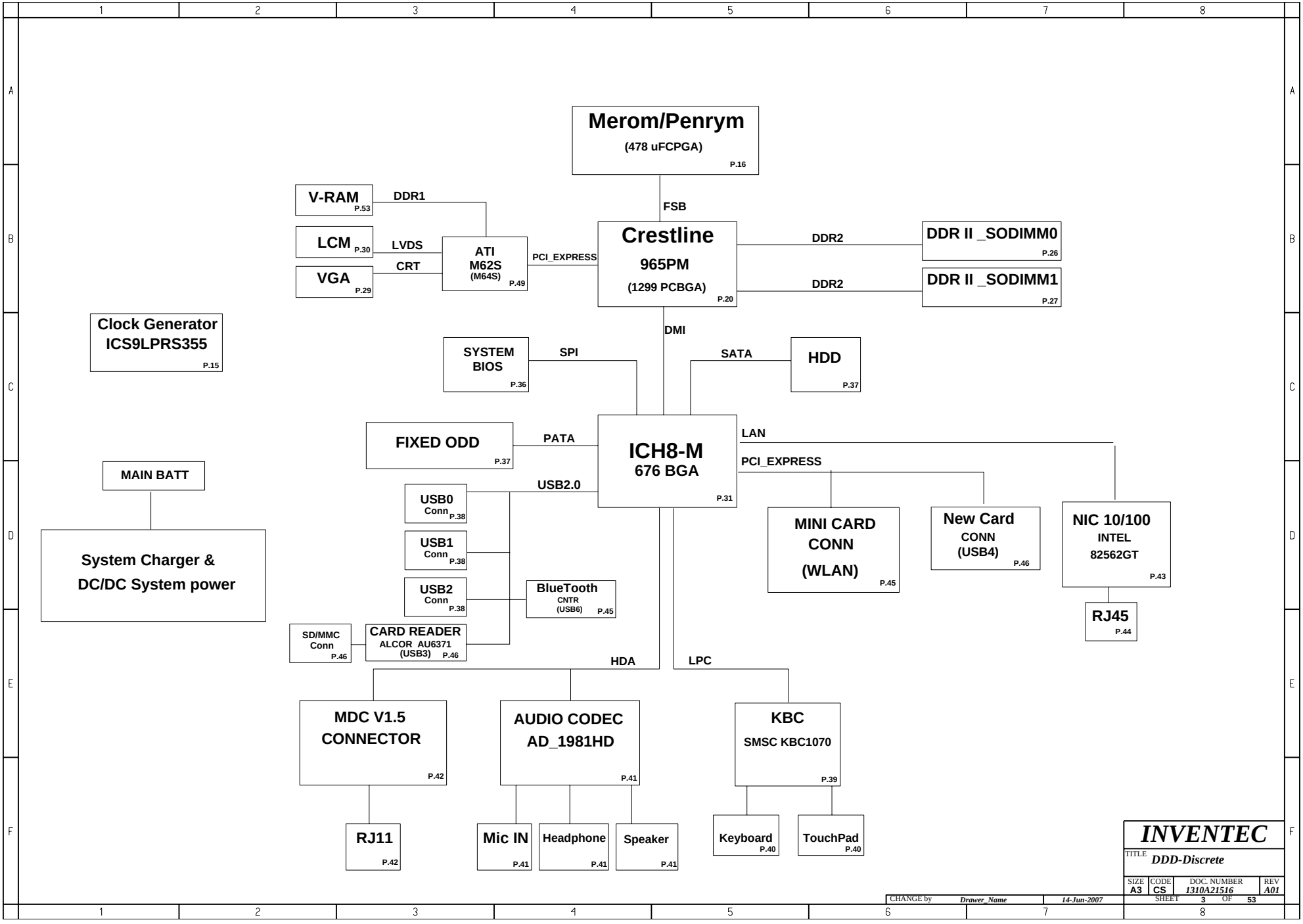
Merom/Penrym
(478 uFCPGA)
P.16
FSB
V-RAM
P.53
DDR1
LCM
P.30
LVDS
VGA
P.29
CRT
ATI
M62S
(M64S)
P.49
PCI_EXPRESS
Crestline
965PM
(1299 PCBGA)
P.20
DDR2
DDR II _SODIMM0
P.26
DDR2
DDR II _SODIMM1
P.27
Clock Generator
ICS9LPRS355
P.15
DMI
SYSTEM
BIOS
P.36
SPI
SATA
HDD
P.37
FIXED ODD
P.37
PATA
ICH8-M
676 BGA
P.31
LAN
PCI_EXPRESS
MAIN BATT
USB2.0
USB0
Conn
P.38
USB1
Conn
P.38
USB2
Conn
P.38
BlueTooth
CNTR
(USB6)
P.45
MINI CARD
CONN
(WLAN)
P.45
New Card
CONN
(USB4)
P.46
NIC 10/100
INTEL
82562GT
P.43
RJ45
P.44
System Charger &
DC/DC System power
SD/MMC
Conn
P.46
CARD READER
ALCOR AU6371
(USB3)
P.46
HDA
LPC
MDC V1.5
CONNECTOR
P.42
AUDIO CODEC
AD_1981HD
P.41
KBC
SMSC KBC1070
P.39
RJ11
P.42
Mic IN
P.41
Headphone
P.41
Speaker
P.41
Keyboard
P.40
TouchPad
P.40
INVENTEC
TITLE
DDD-Discrete
SIZE
A3
CODE
CS
DOC. NUMBER
1310A21516
REV
A01
SHEET
3
OF
53
CHANGE by
Drawer_Name
14-Jun-2007

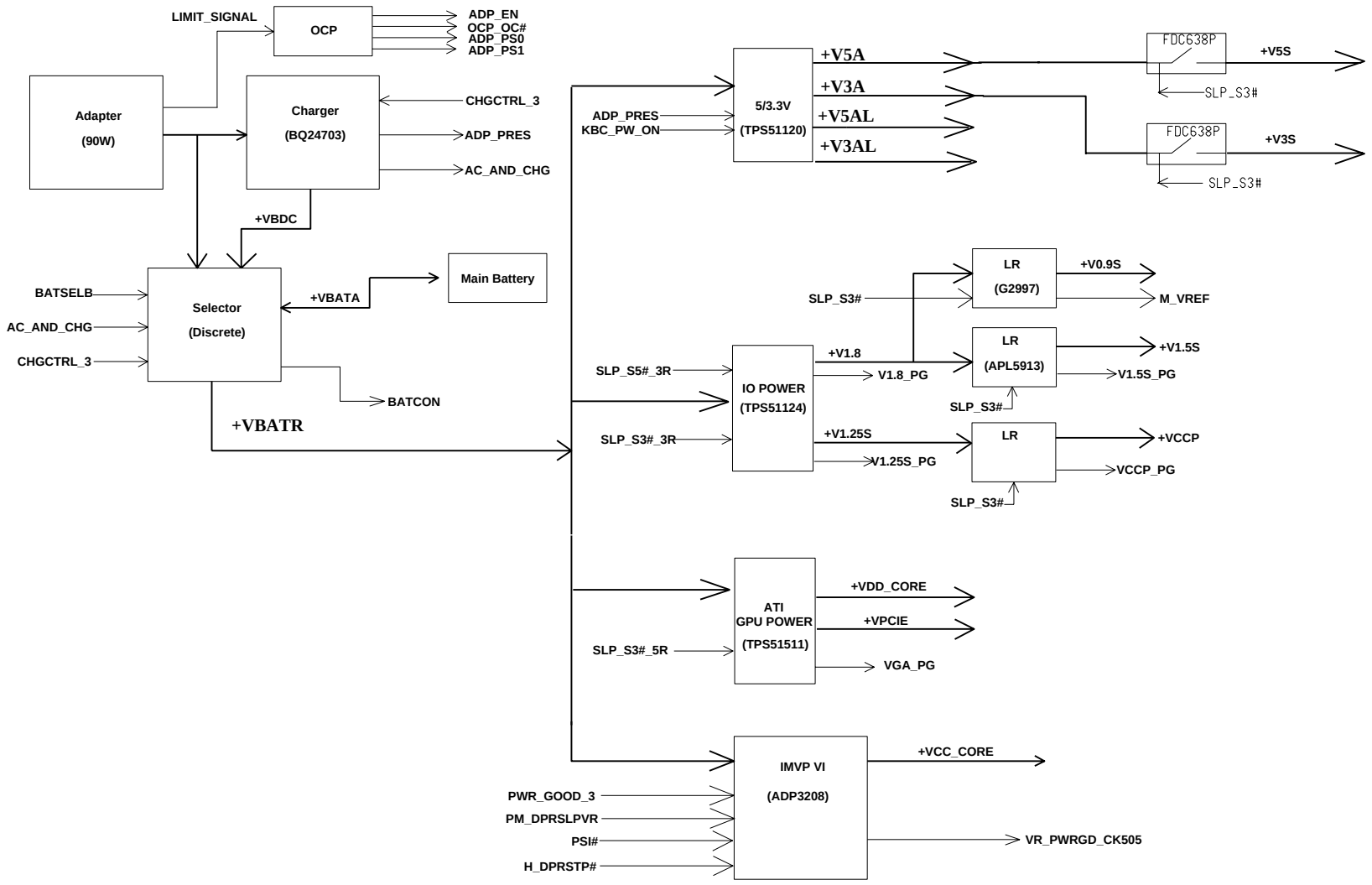

INVENTEC			
TITLE DDD-Discrete			
SIZE A3	CODE CS	DOC. NUMBER 1310A21516	REV A01
CHANGE by Drawer_Name	14-Jun-2007	SHEET 4 OF 53	

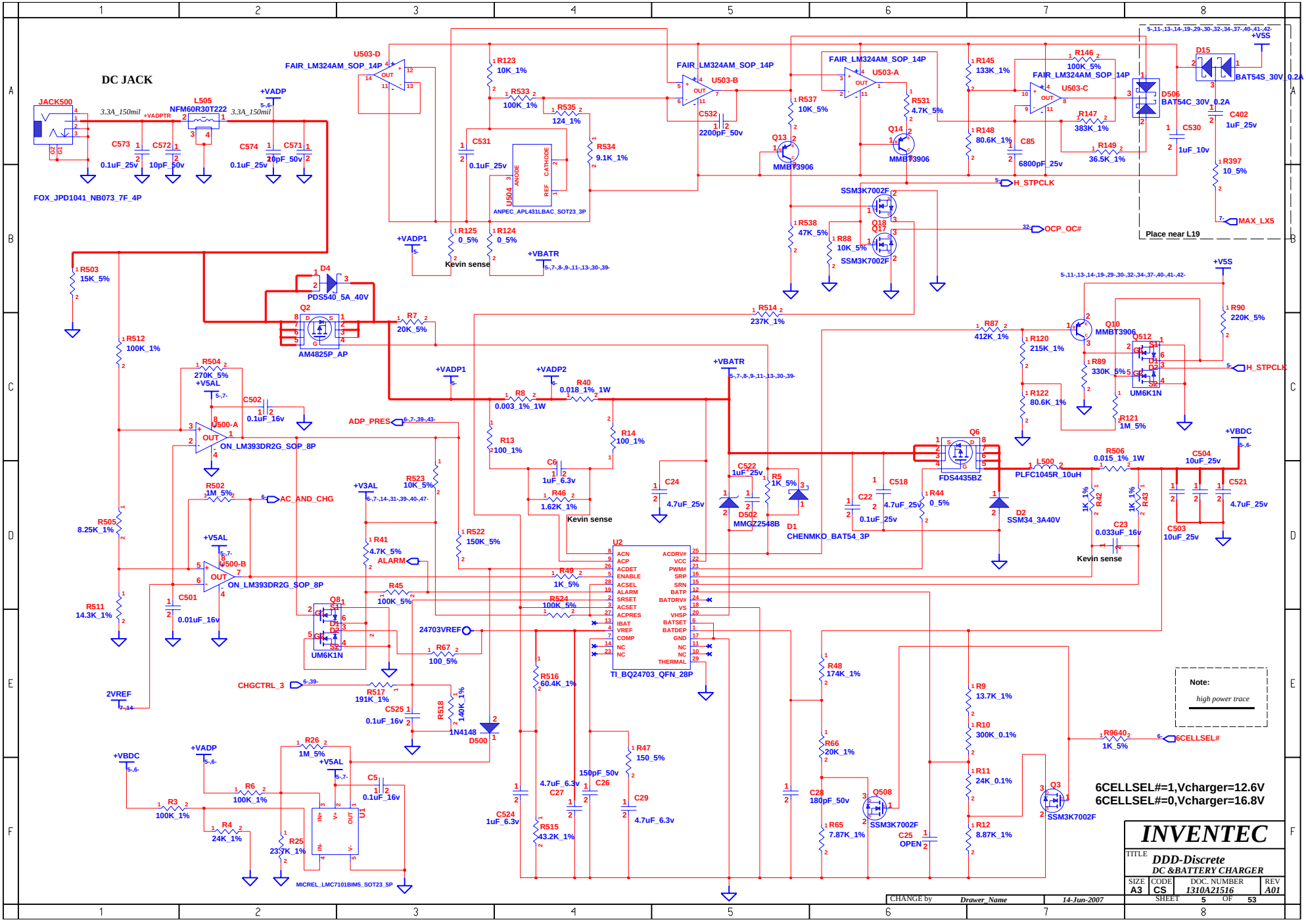
DC JACK
JACK500
FOX_JPD1041_NB073_7F_4P
L505
NFM60R30T222
U503-D
FAIR_LM324AM_SOP_14P
U503-B
U503-A
U503-C
U504
ANPEC_APL431LBAC_SOT23_3P
Q13
MMBT3906
Q14
MMBT3906
Q10
MMBT3906
SSM3K7002F
Q17
Q19
D15
BAT54S_30V_0.2A
D506
BAT54C_30V_0.2A
D4
PDS540_5A_40V
Q2
AM4825P_AP
U500-A
U500-B
ON_LM393DR2G_SOP_8P
Q8
UM6K1N
Q12
UM6K1N
Q6
FDS4435BZ
L500
PLFC1045R_10uH
D2
SSM34_3A40V
D502
MMGZ2548B
D1
CHENMKO_BAT54_3P
U2
TI_BQ24703_QFN_28P
D500
1N4148
U1
MICREL_LMC7101BIM5_SOT23_5P
Q508
SSM3K7002F
Q3
SSM3K7002F
Kevin sense
Place near L19
Note:
high power trace
6CELLSEL#=1,Vcharger=12.6V
6CELLSEL#=0,Vcharger=16.8V
INVENTEC
TITLE
DDD-Discrete
DC &BATTERY CHARGER
SIZE A3
CODE CS
DOC. NUMBER 1310A21516
REV A01
SHEET 5 OF 53
CHANGE by Drawer_Name
14-Jun-2007

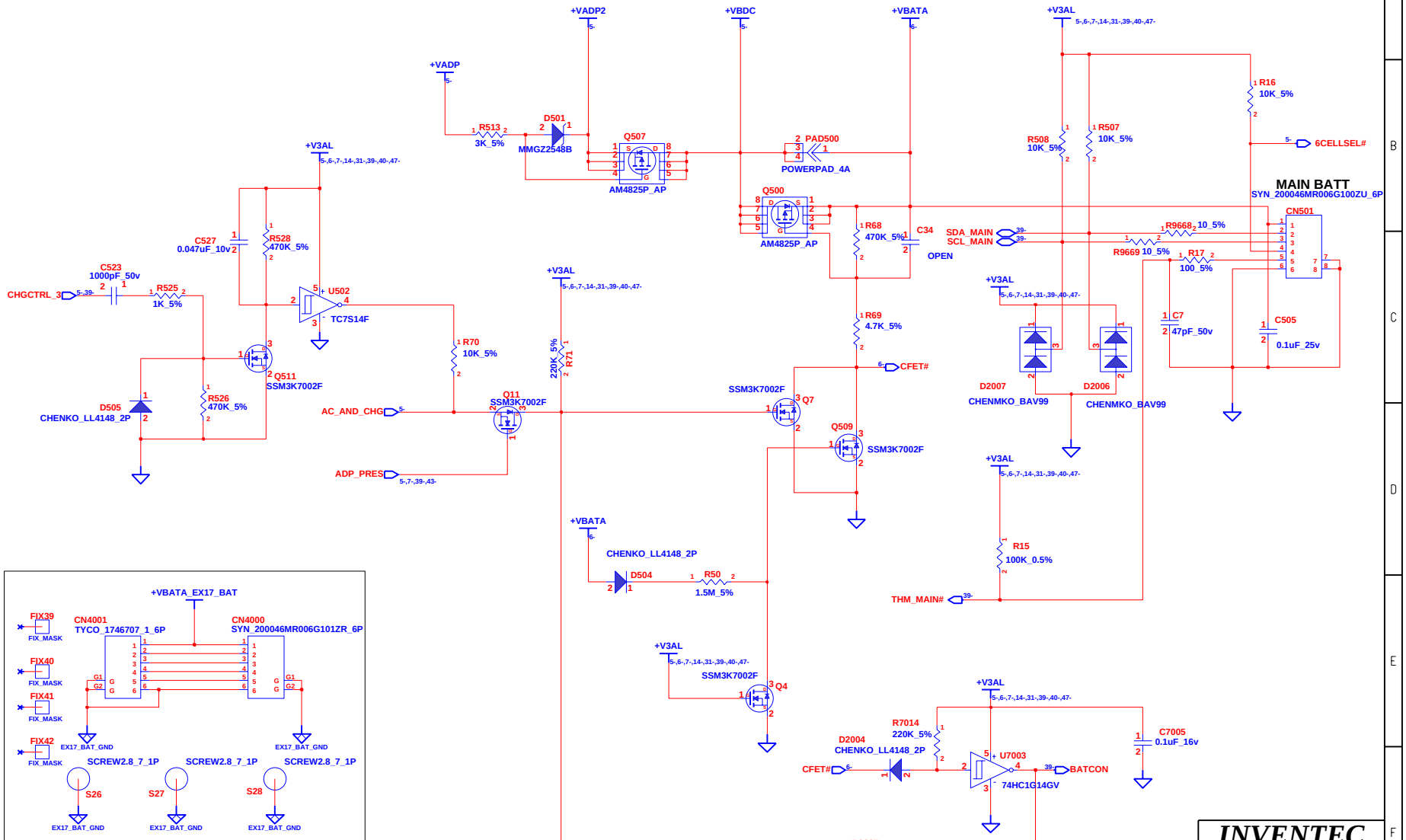

INVENTEC

TITLE **DDD-Discrete**
SELECT & BATTERY CONN

SIZE	CODE	DOC. NUMBER	REV
A3	CS	1310A21516	A01

SHEET 6 OF 53

CHANGE by Drawer_Name 21-Jun-2007

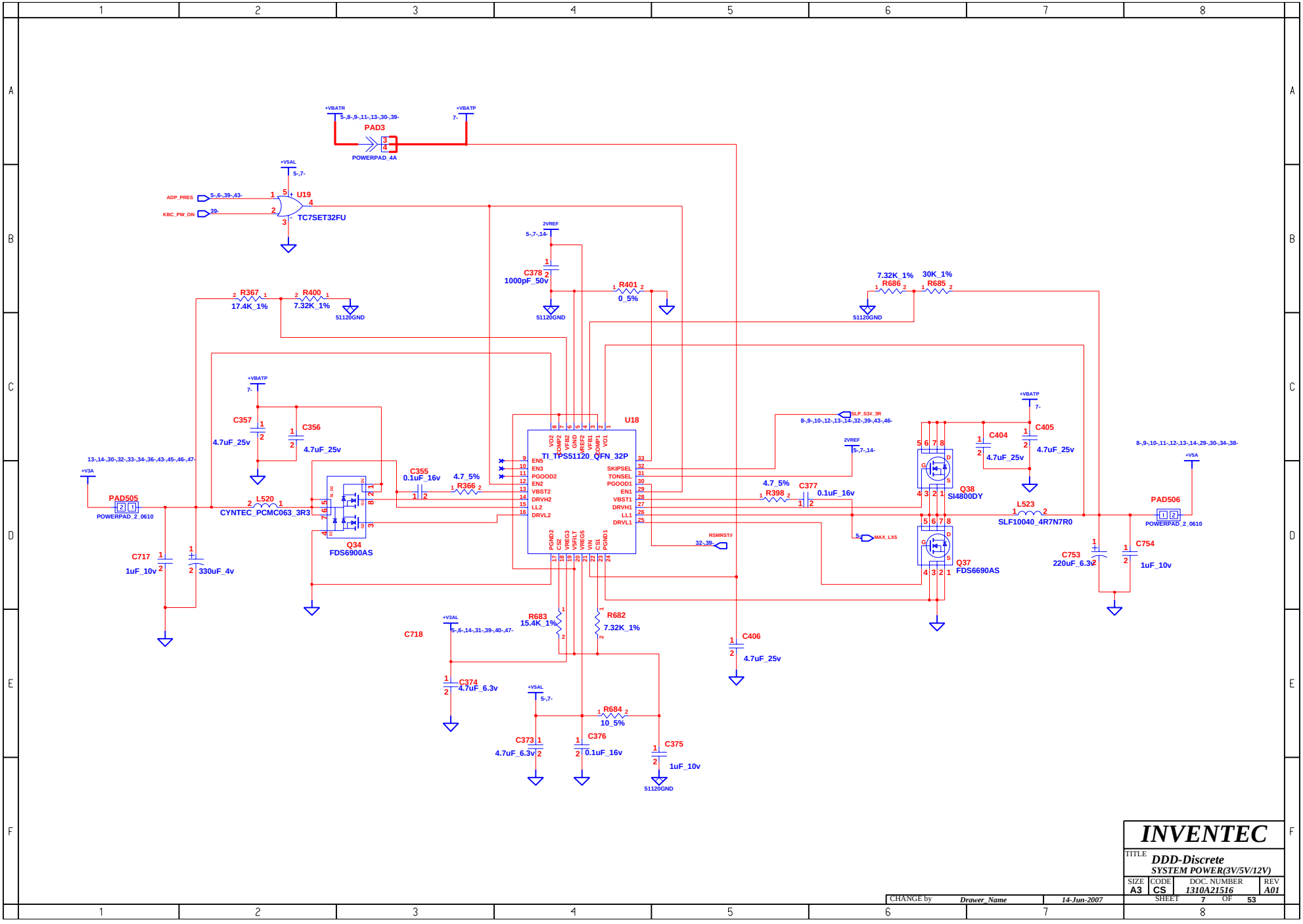

INVENTEC

TITLE **DDD-Discrete**
SYSTEM POWER(3V/5V/12V)

SIZE	CODE	DOC. NUMBER	REV
A3	CS	1310A21516	A01

SHEET 7 OF 53

CHANGE by Drawer_Name 14-Jun-2007

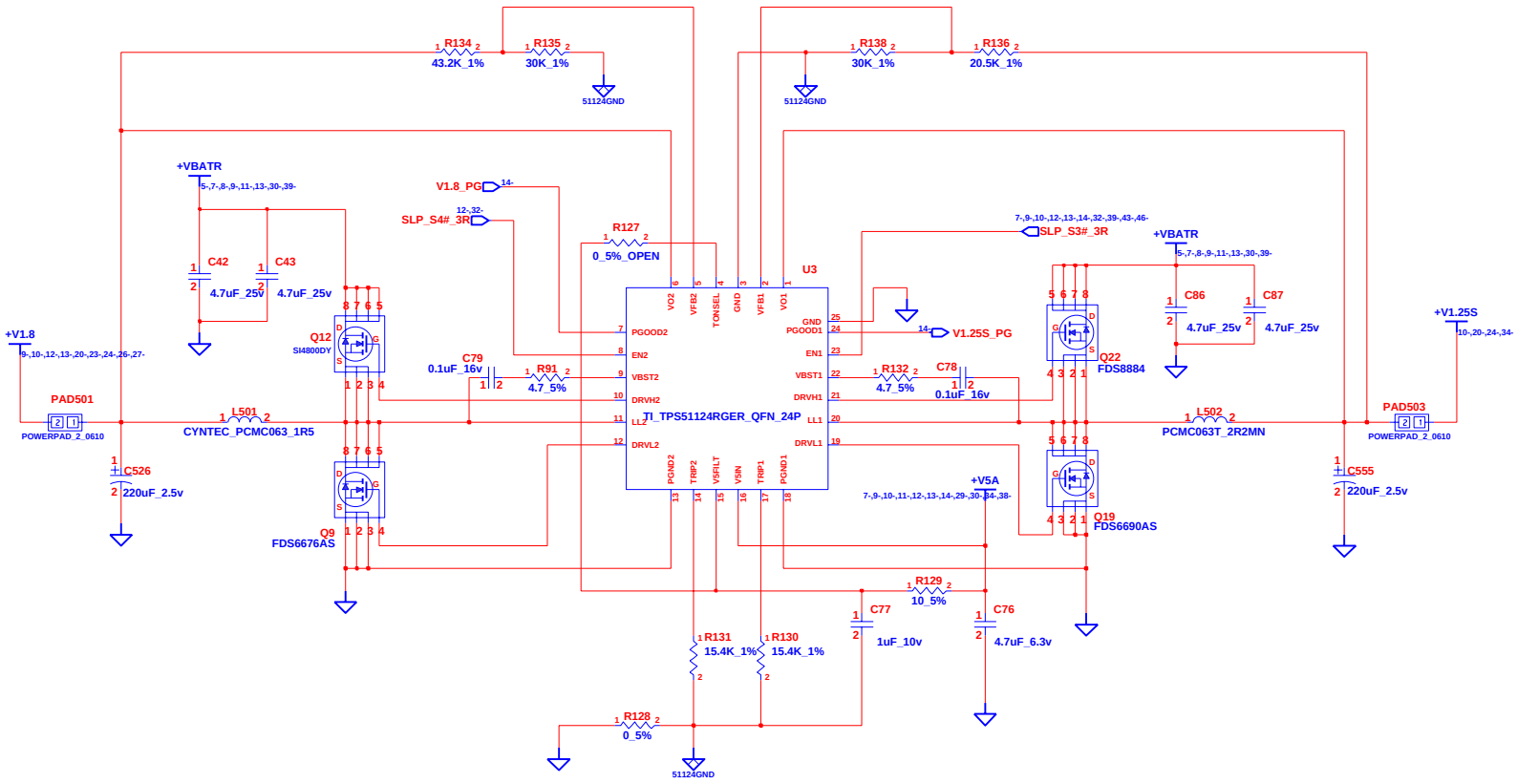

INVENTEC

TITLE
DDD-Discrete
SYSTEM POWER(+V1.8/+V1.25S)

SIZE	CODE	DOC. NUMBER	REV
A3	CS	1310A21516	A01

CHANGE by *Drawer_Name* *14-Jun-2007*

SHEET 8 OF 53

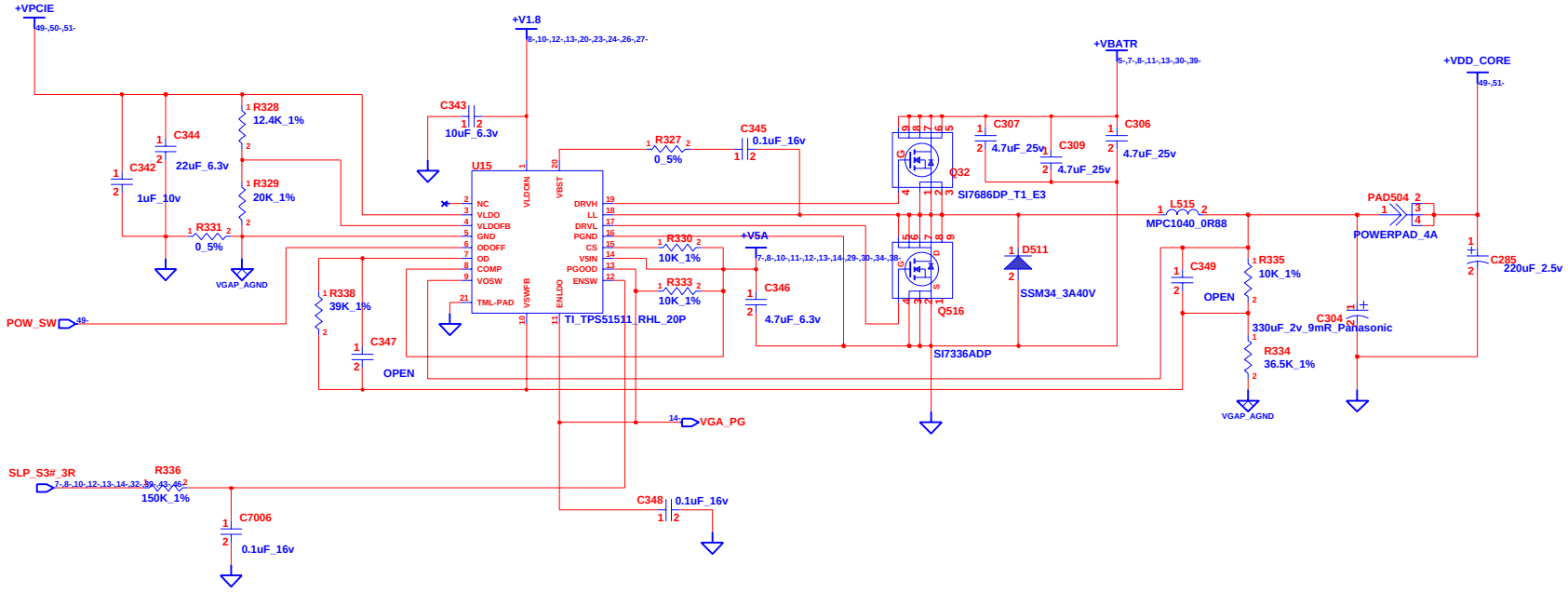

INVENTEC

TITLE
DDD-Discrete
GRAPHIC POWER (+VGFX_CORE)

SIZE	CODE	DOC. NUMBER	REV
A3	CS	1310A21516	A01

CHANGE by Drawer_Name 14-Jun-2007

SHEET 9 OF 53

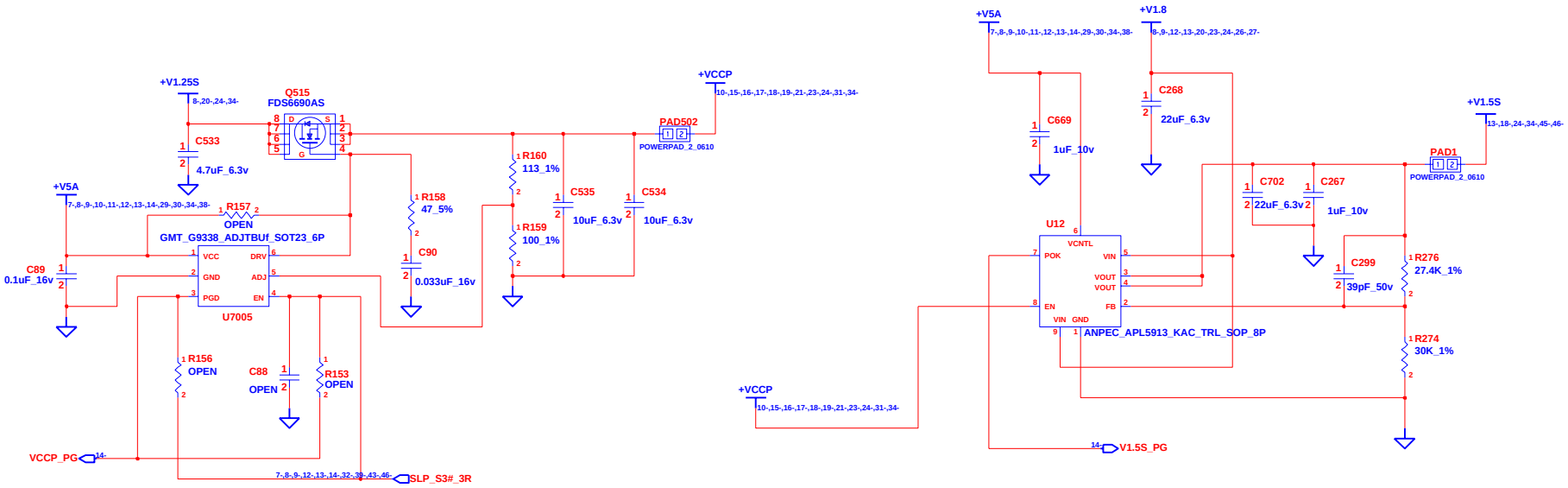

	R579	R576	R578	R577
G9338	0 ohm	OPEN	OPEN	0 ohm
SC339	OPEN	0 ohm	0 ohm	OPEN

Added for VGA

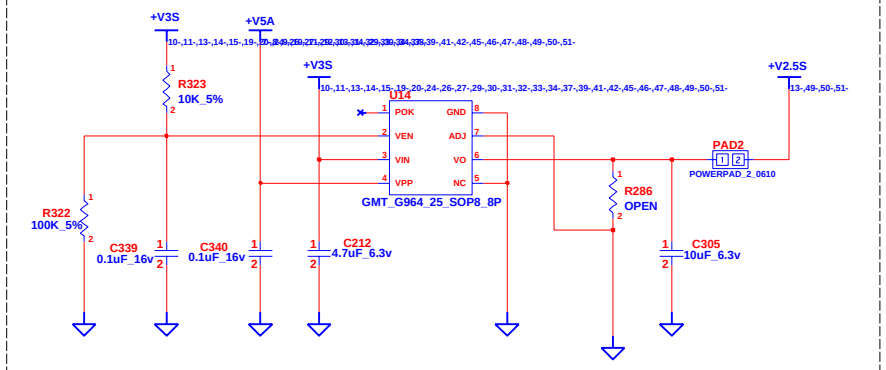

INVENTEC

TITLE **DDD-Discrete**
SYSTEM POWER(+VCCP/+V1.5S)

SIZE	CODE	DOC. NUMBER	REV
A3	CS	1310A21516	A01

CHANGE by Drawer_Name 14-Jun-2007

SHEET 10 OF 53

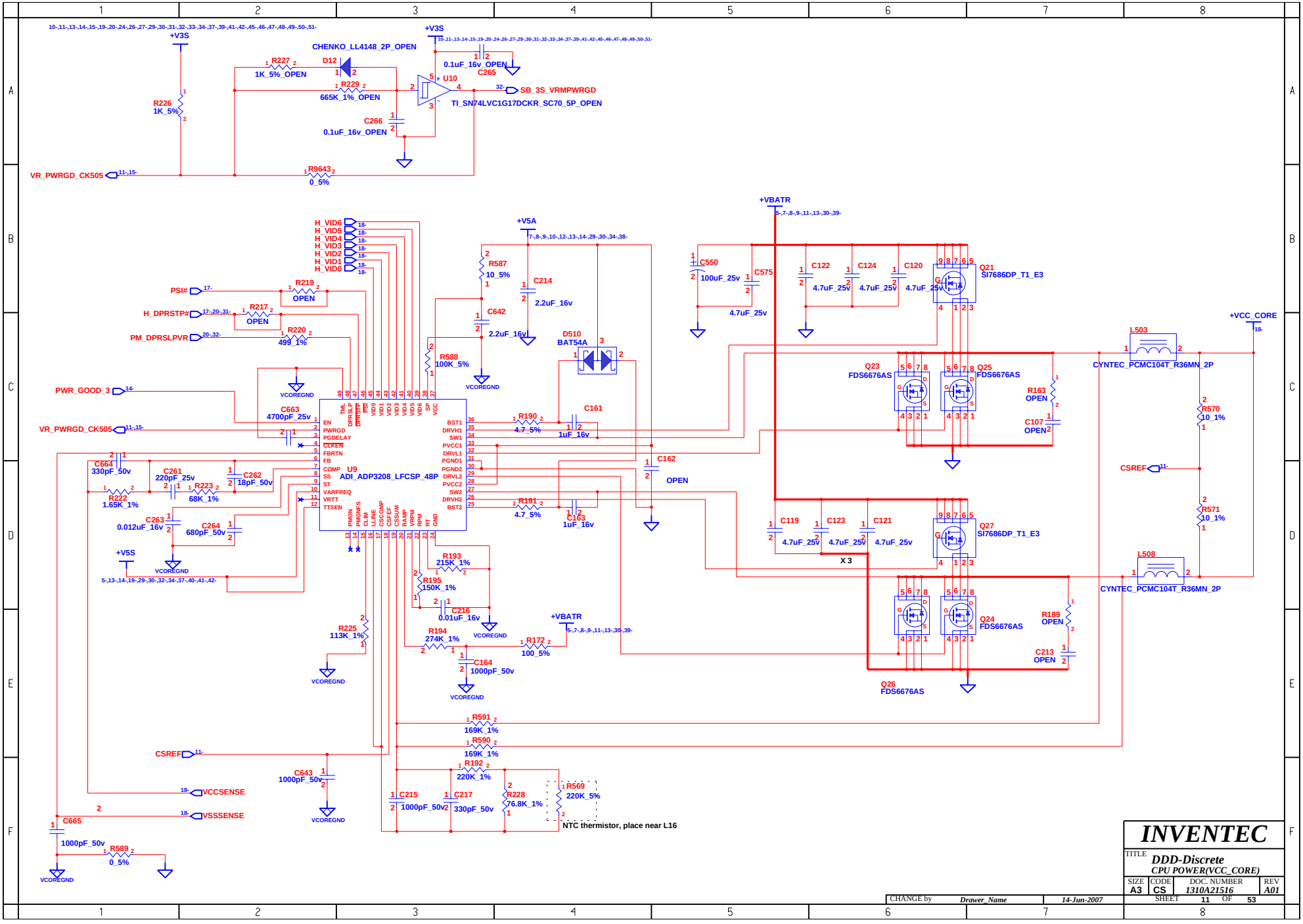
+V3S
CHENKO_LL4148_2P_OPEN
D12
R227
1K_5%_OPEN
R229
665K_1%_OPEN
R226
1K_5%
C266
0.1uF_16v_OPEN
C265
0.1uF_16v_OPEN
U10
TI_SN74LVC1G17DCKR_SC70_5P_OPEN
SB_3S_VRMPWRGD
VR_PWRGD_CK505
R9643
0_5%
+VBATR
+V5A
H_VID6
H_VID5
H_VID4
H_VID3
H_VID2
H_VID1
H_VID0
PSI#
R219
OPEN
H_DPRSTP#
R217
OPEN
PM_DPRSLPVR
R220
499_1%
PWR_GOOD_3
VR_PWRGD_CK505
R587
10_5%
C214
2.2uF_16v
C642
2.2uF_16v
R588
100K_5%
D510
BAT54A
C550
100uF_25v
C575
4.7uF_25v
C122
4.7uF_25v
C124
4.7uF_25v
C120
4.7uF_25v
Q21
SI7686DP_T1_E3
+VCC_CORE
L503
CYNTEC_PCMC104T_R36MN_2P
Q23
FDS6676AS
Q25
FDS6676AS
R163
OPEN
C107
OPEN
R570
10_1%
CSREF
R571
10_1%
C663
4700pF_25v
EN
PWRGD
PGDELAY
CLKEN
FBRTN
FB
COMP
SS
ST
VARFREQ
VRTT
TTSEN
U9
ADI_ADP3208_LFCSP_48P
BST1
DRVH1
SW1
PVCC1
DRVL1
PGND1
PGND2
DRVL2
PVCC2
SW2
DRVH2
BST2
R190
4.7_5%
C161
1uF_16v
C162
OPEN
R191
4.7_5%
C163
1uF_16v
C664
330pF_50v
C261
220pF_25v
C262
18pF_50v
R222
1.65K_1%
R223
68K_1%
C263
0.012uF_16v
C264
680pF_50v
+V5S
C119
4.7uF_25v
C123
4.7uF_25v
C121
4.7uF_25v
X 3
Q27
SI7686DP_T1_E3
L508
CYNTEC_PCMC104T_R36MN_2P
Q24
FDS6676AS
Q26
FDS6676AS
R189
OPEN
C213
OPEN
R193
215K_1%
R195
150K_1%
C216
0.01uF_16v
R225
113K_1%
R194
274K_1%
R172
100_5%
C164
1000pF_50v
R591
169K_1%
R590
169K_1%
R192
220K_1%
C643
1000pF_50v
C215
1000pF_50v
C217
330pF_50v
R228
76.8K_1%
R569
220K_5%
NTC thermistor, place near L16
VCCSENSE
VSSSENSE
C665
1000pF_50v
R589
0_5%
VCOREGND
INVENTEC
TITLE
DDD-Discrete
CPU POWER(VCC_CORE)
SIZE A3
CODE CS
DOC. NUMBER 1310A21516
REV A01
SHEET 11 OF 53
CHANGE by Drawer_Name
14-Jun-2007

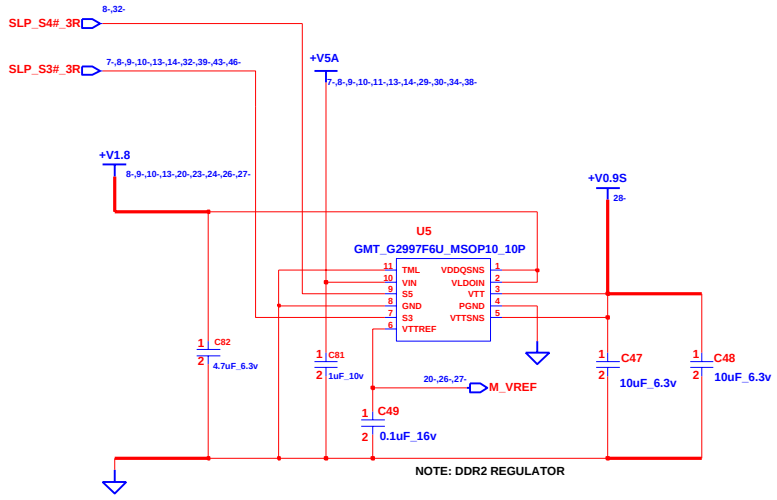

CHANGE by	Drawer_Name	14-Jun-2007	

INVENTEC

TITLE **DDD-Discrete**
DDR TERMINATION VOLTAGE

SIZE	CODE	DOC. NUMBER	REV
A3	CS	1310A21516	A01

SHEET 12 OF 53

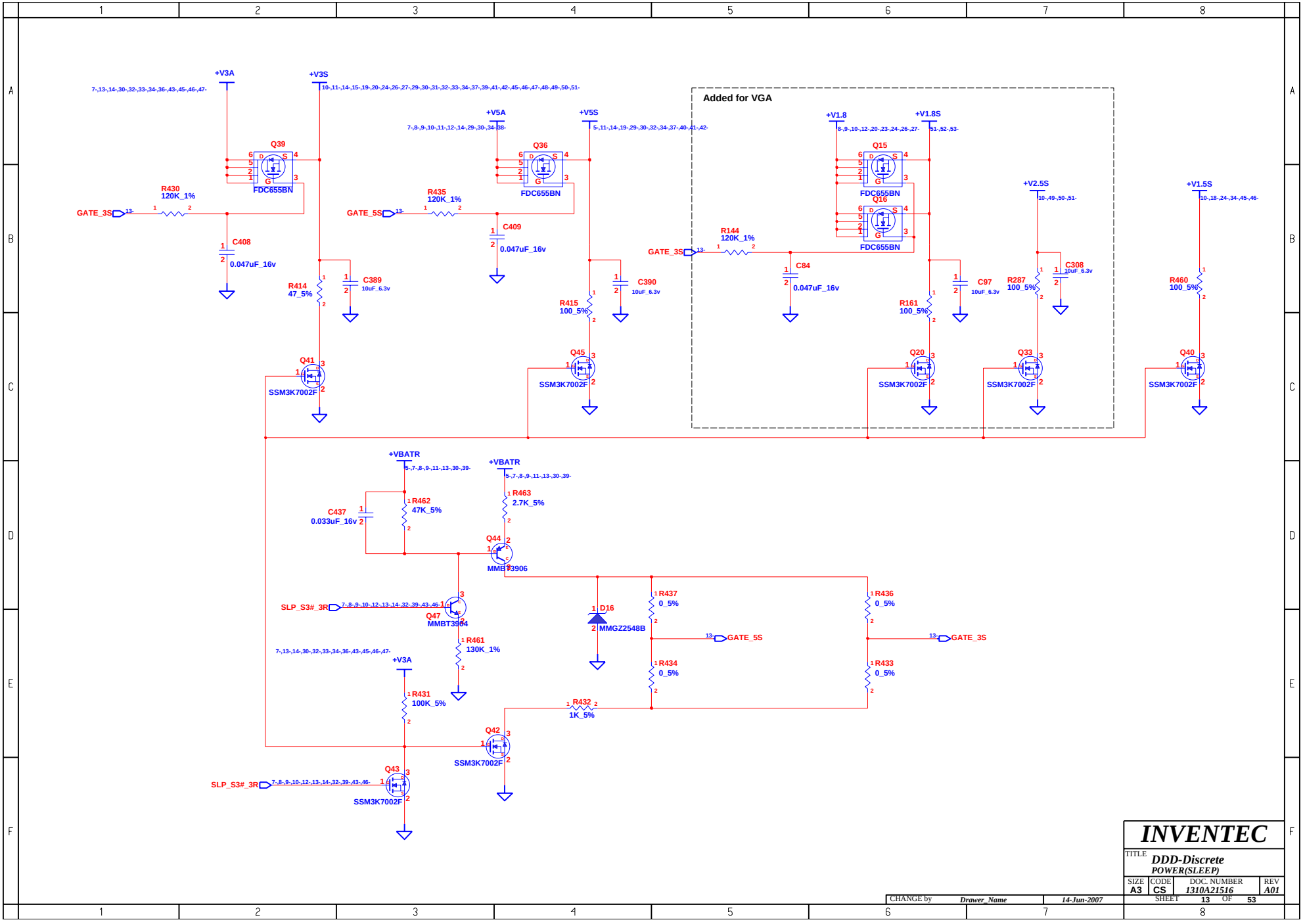

INVENTEC			
TITLE DDD-Discrete POWER(SLEEP)			
SIZE A3	CODE CS	DOC. NUMBER 1310A21516	REV A01
CHANGE by Drawer_Name	14-Jun-2007	SHEET 13 OF 53	

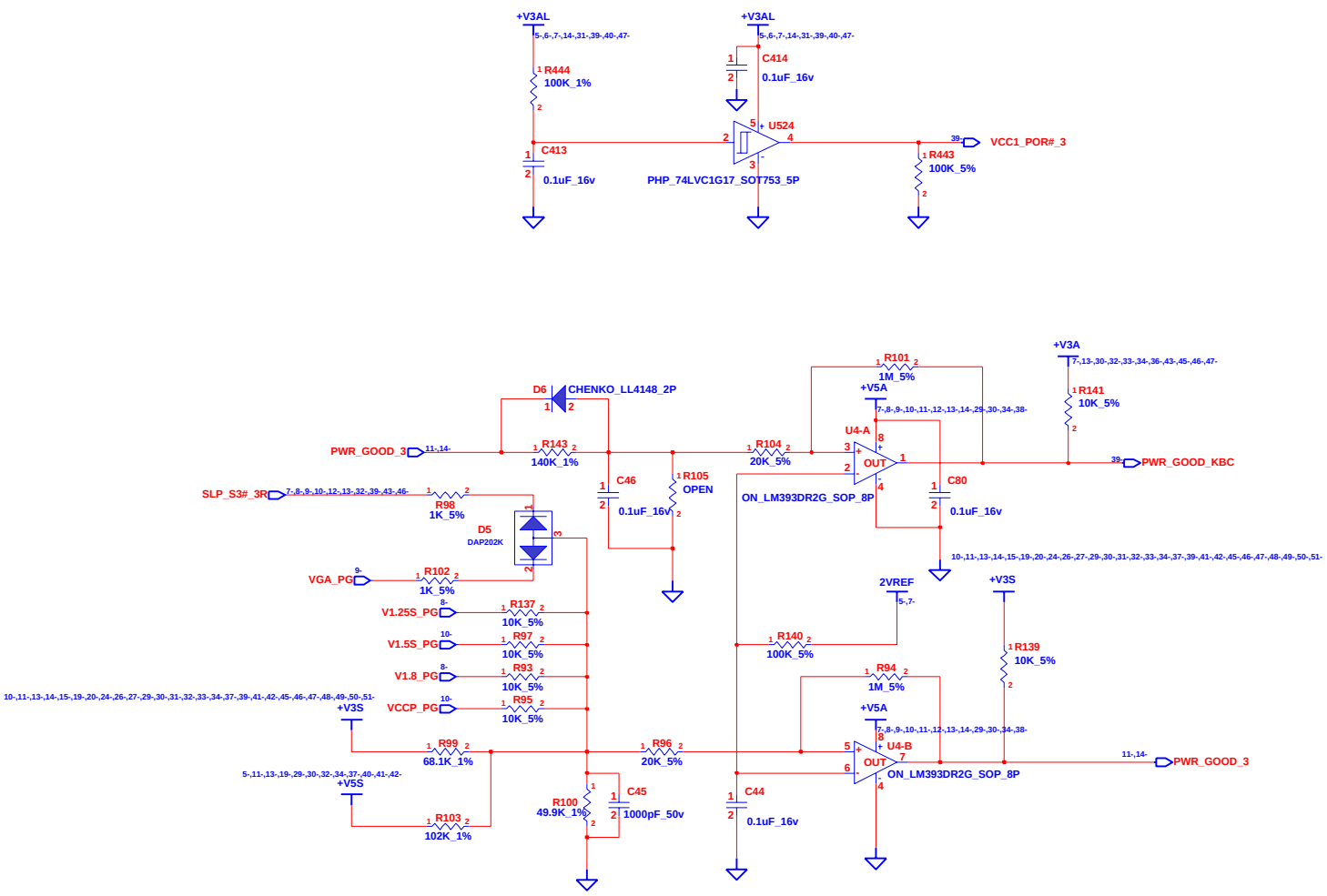

INVENTEC

TITLE **DDD-Discrete**
POWER(SEQUENCE)

SIZE	CODE	DOC. NUMBER	REV
A3	CS	1310A21516	A01

CHANGE by *Drawer_Name* *14-Jun-2007*

SHEET 14 OF 53

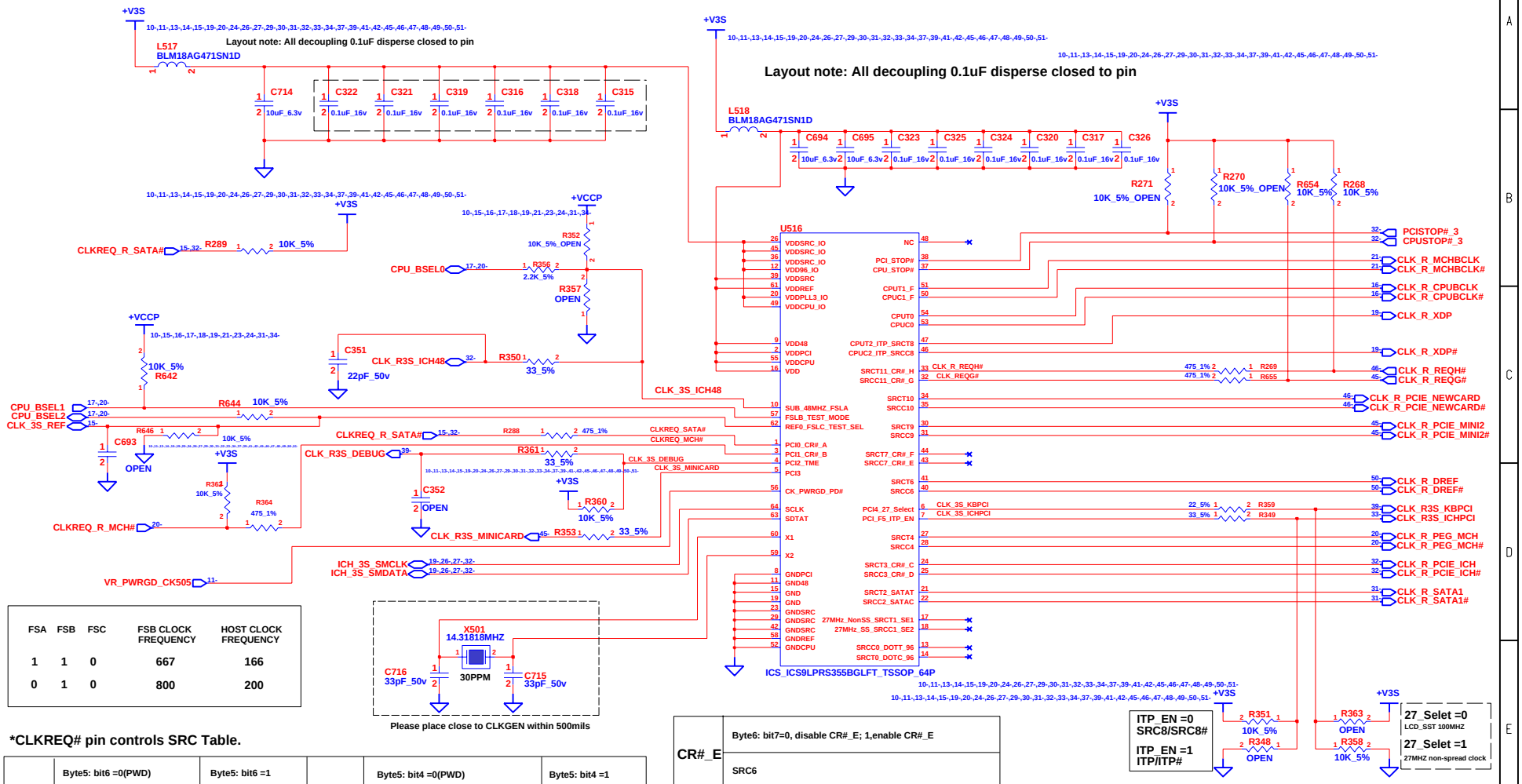

FSA	FSB	FSC	FSB CLOCK FREQUENCY	HOST CLOCK FREQUENCY
1	1	0	667	166
0	1	0	800	200

***CLKREQ# pin controls SRC Table.**

CR#_A	Byte5: bit6 =0(PWD)	Byte5: bit6 =1	CR#_B	Byte5: bit4 =0(PWD)	Byte5: bit4 =1
	SRC0	SRC2		SRC1	SRC4
	Byte5: bit7=0, disable CR#_A; 1,enable CR#_A			Byte5: bit5=0, disable CR#_B; 1,enable CR#_B	

CR#_C	Byte5: bit2 =0(PWD)	Byte5: bit2 =1	CR#_D	Byte5: bit0 =0(PWD)	Byte5: bit0 =1
	SRC0	SRC2		SRC1	SRC4
	Byte5: bit3=0, disable CR#_C; 1,enable CR#_C			Byte5: bit1=0, disable CR#_D; 1,enable CR#_D	

CR#_E	Byte6: bit7=0, disable CR#_E; 1,enable CR#_E
	SRC6
CR#_F	Byte6: bit6=0, disable CR#_F; 1,enable CR#_F
	SRC8
CR#_G	Byte6: bit5=0, disable CR#_G; 1,enable CR#_G
	SRC9
CR#_H	Byte6: bit4=0, disable CR#_H; 1,enable CR#_H
	SRC10

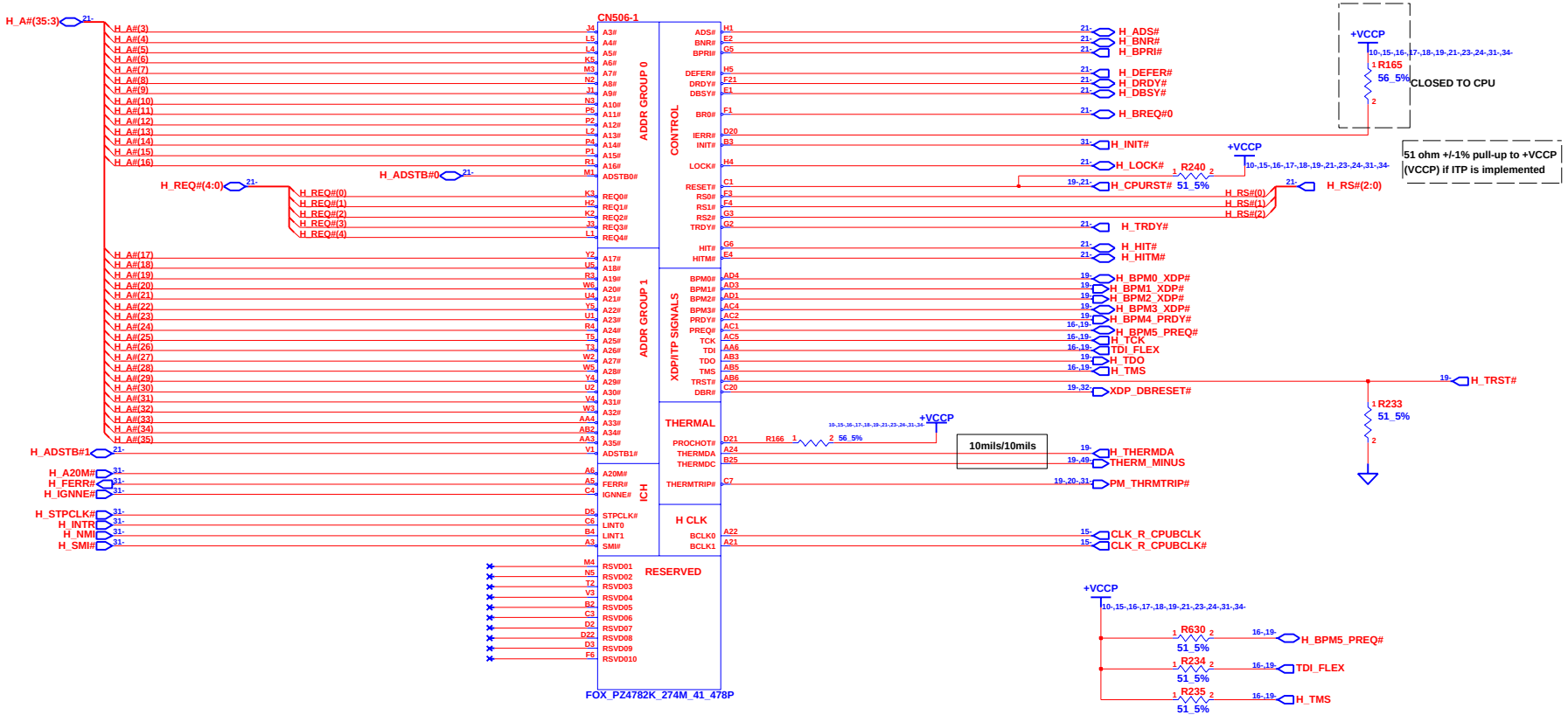

INVENTEC			
TITLE DDD-Discrete MEROM-1			
SIZE A3	CODE CS	DOC. NUMBER 1310A21516	REV A01
CHANGE by Drawer_Name	14-Jun-2007	SHEET 16 OF 53	

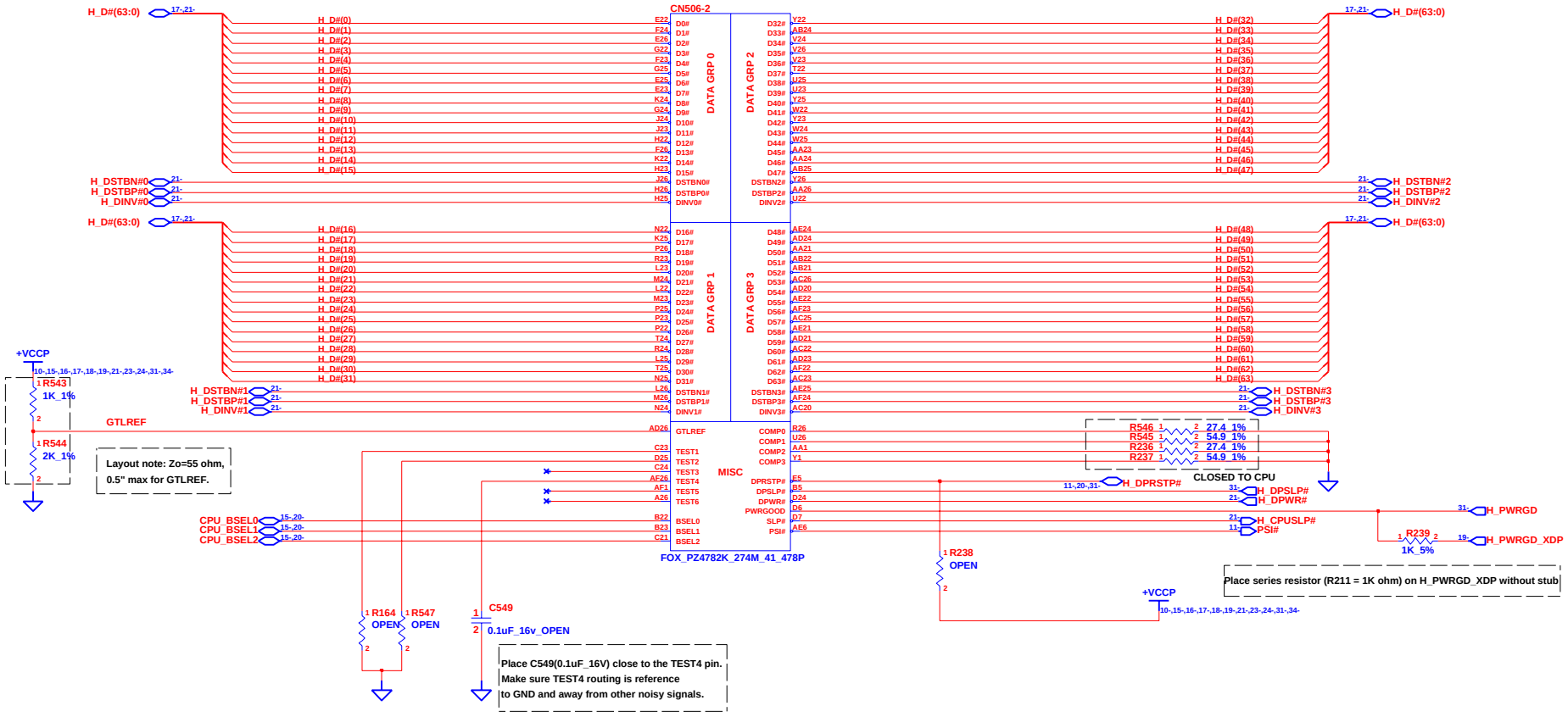

CHANGE by	Drawer_Name	14-Jun-2007	

INVENTEC

TITLE: DDD-Discrete
MEROM-2

SIZE	CODE	DOC. NUMBER	REV
A3	CS	1310A21516	A01

SHEET 17 OF 53

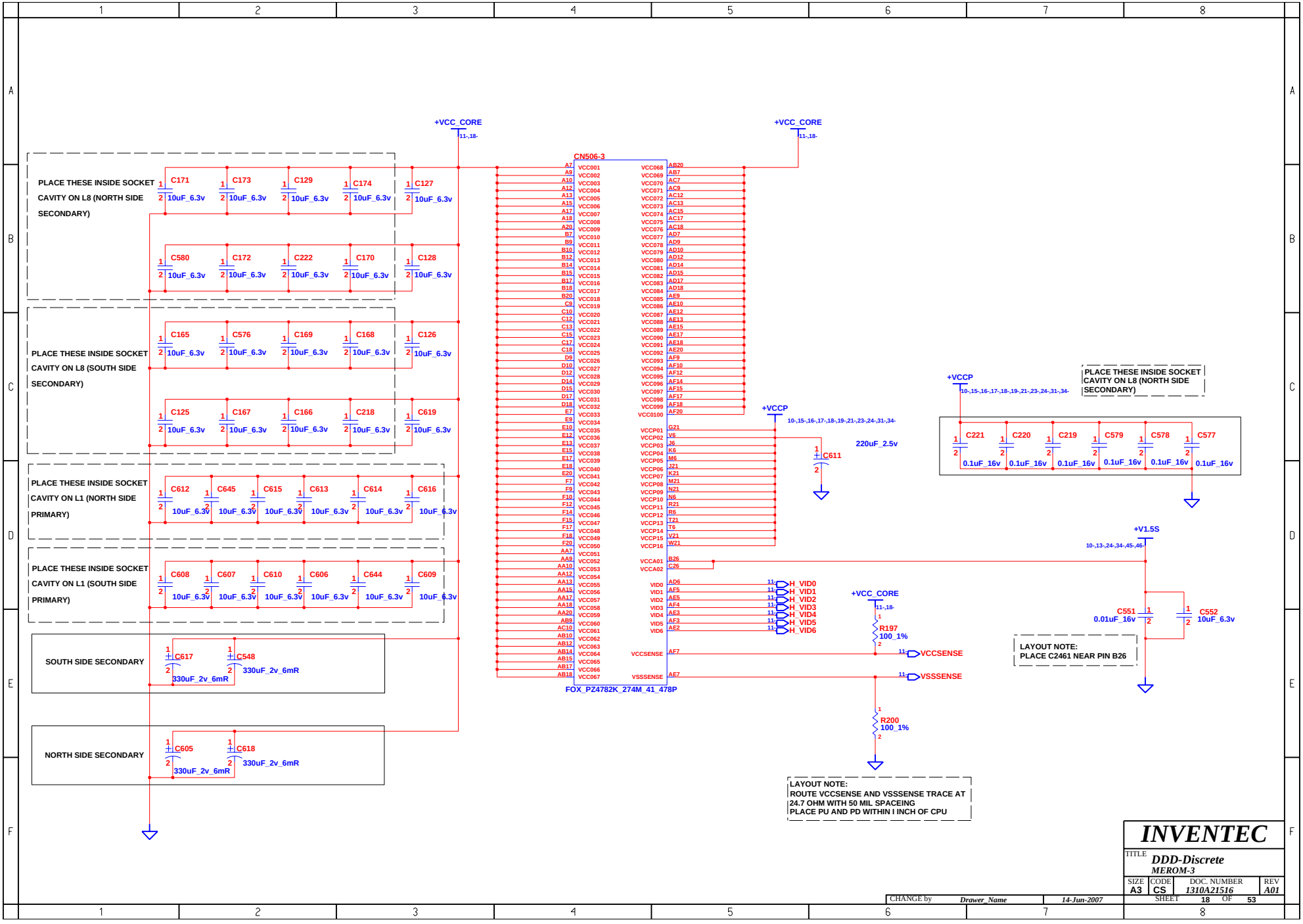
+VCC_CORE
11-,18-
CN506-3
PLACE THESE INSIDE SOCKET CAVITY ON L8 (NORTH SIDE SECONDARY)
C171 C173 C129 C174 C127
C580 C172 C222 C170 C128
10uF_6.3v
PLACE THESE INSIDE SOCKET CAVITY ON L8 (SOUTH SIDE SECONDARY)
C165 C576 C169 C168 C126
C125 C167 C166 C218 C619
PLACE THESE INSIDE SOCKET CAVITY ON L1 (NORTH SIDE PRIMARY)
C612 C645 C615 C613 C614 C616
PLACE THESE INSIDE SOCKET CAVITY ON L1 (SOUTH SIDE PRIMARY)
C608 C607 C610 C606 C644 C609
SOUTH SIDE SECONDARY
C617 C548
330uF_2v_6mR
NORTH SIDE SECONDARY
C605 C618
FOX_PZ4782K_274M_41_478P
+VCCP
10-,15-,16-,17-,18-,19-,21-,23-,24-,31-,34-
C611
220uF_2.5v
PLACE THESE INSIDE SOCKET CAVITY ON L8 (NORTH SIDE SECONDARY)
C221 C220 C219 C579 C578 C577
0.1uF_16v
+V1.5S
10-,13-,24-,34-,45-,46-
C551 C552
0.01uF_16v
10uF_6.3v
LAYOUT NOTE:
PLACE C2461 NEAR PIN B26
H_VID0 H_VID1 H_VID2 H_VID3 H_VID4 H_VID5 H_VID6
R197
100_1%
VCCSENSE
VSSSENSE
R200
LAYOUT NOTE:
ROUTE VCCSENSE AND VSSSENSE TRACE AT 24.7 OHM WITH 50 MIL SPACEING
PLACE PU AND PD WITHIN I INCH OF CPU
INVENTEC
TITLE DDD-Discrete
MEROM-3
SIZE A3
CODE CS
DOC. NUMBER 1310A21516
REV A01
CHANGE by Drawer_Name
14-Jun-2007
SHEET 18 OF 53

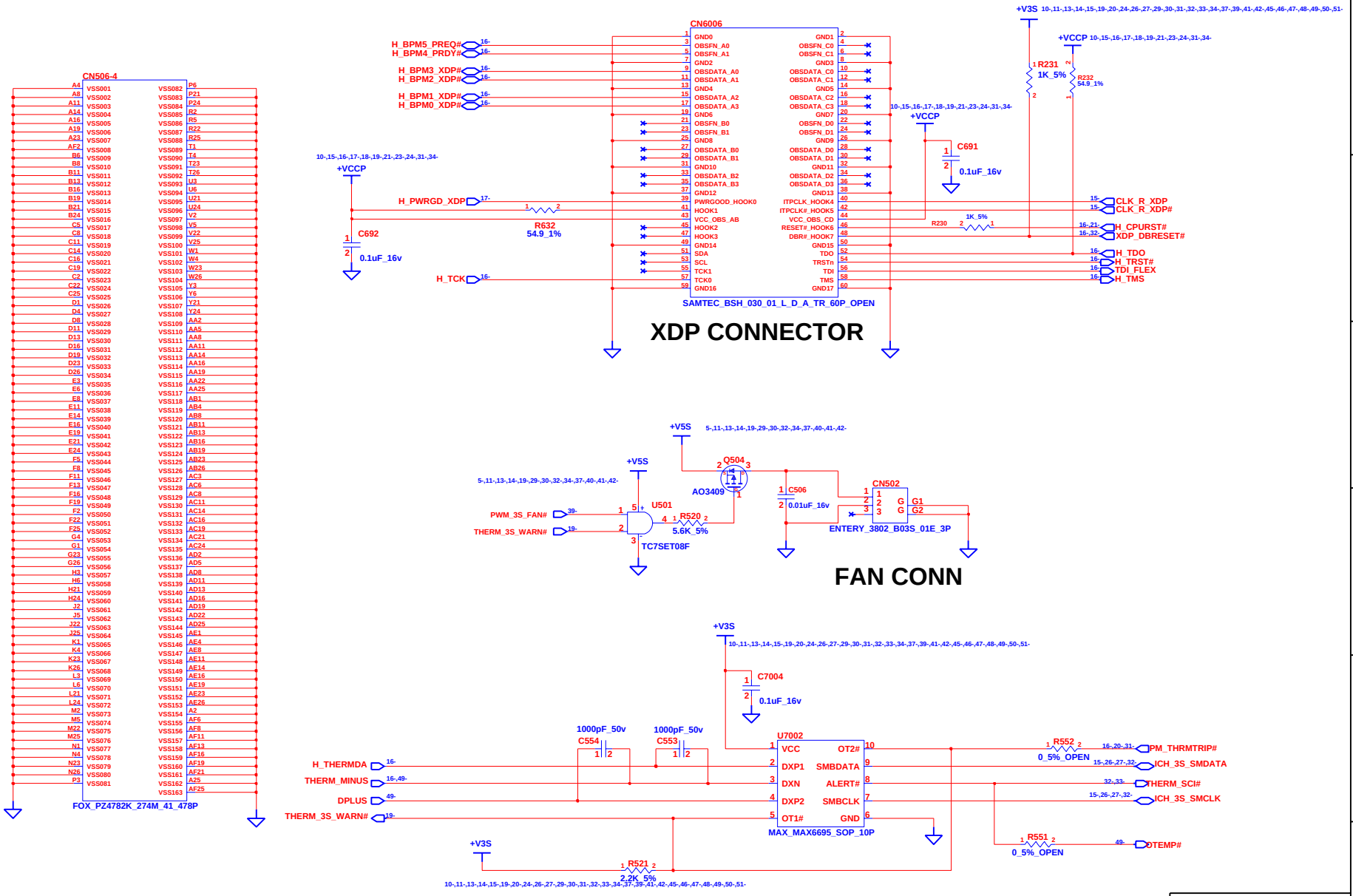

INVENTEC			
TITLE DDD-Discrete THERMAL&FAN			
SIZE A3	CODE CS	DOC. NUMBER 1310A21516	REV A01
CHANGE by Drawer_Name	14-Jun-2007	SHEET 19 OF 53	

MCH_CFG(5)	LOW=DMIx2 HIGH=DMIx4

MCH_CFG(7) (CPU Strap)	LOW=RSVD HIGH=Mobile CPU

MCH_CFG(9) PCIE Graphics Lane	LOW=Reverse Lane HIGH=Normal operation

NOTE : USE 4K-OHM RESISTOR WHEN INSTALLING PULL-UP/PULL-DOWN RESISTOR ON ANY MCH-CFG CONNECTION/PINS.

MCH_CFG(13:12) XOR/ALLZ	00=PARTIAL CLOCK GATING DISABLE 01=XOR MODE ENABLE 10=ALL-Z MODE ENABLE 11=NORMAL OPERATION

MCH_CFG(16) (FSB Dynamic ODT)	LOW=Dynamic ODT Disable HIGH=Dynamic ODT Enable

MCH_CFG(11) PSB 4X CLK ENABLE	LOW=CALISTOGA HIGH=RESERVED

NOTE: CFG[2:0] STRP : 001b : 533 MT/S
011b : 667 MT/S

Note: R1351,R1352
For Calero : 80.6 ohm
For Crestline : 20 ohm

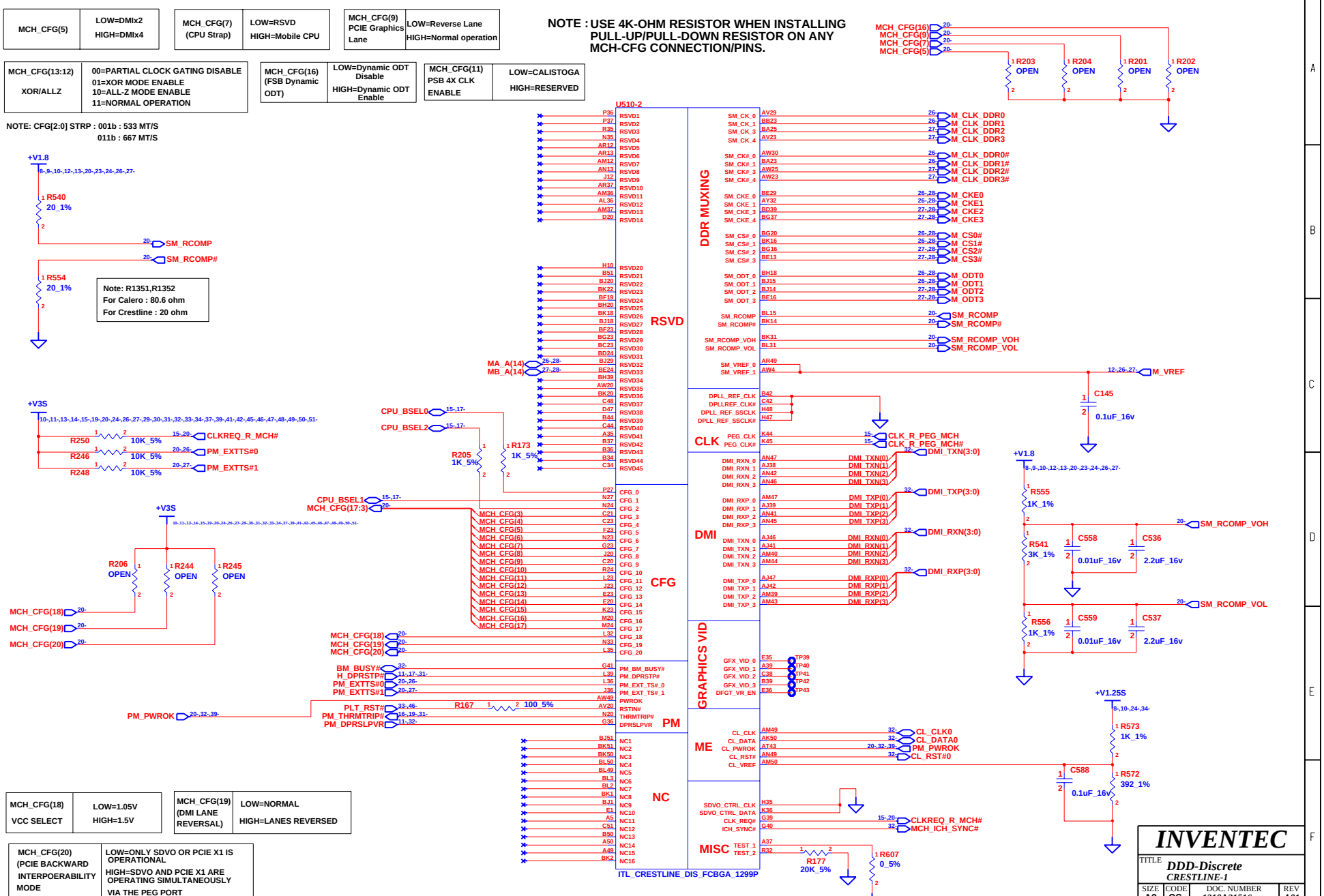

MCH_CFG(18) VCC SELECT	LOW=1.05V HIGH=1.5V

MCH_CFG(19) (DMI LANE REVERSAL)	LOW=NORMAL HIGH=LANES REVERSED

MCH_CFG(20) (PCIE BACKWARD INTERPOERABILITY MODE	LOW=ONLY SDVO OR PCIE X1 IS OPERATIONAL HIGH=SDVO AND PCIE X1 ARE OPERATING SIMULTANEOUSLY VIA THE PEG PORT

INVENTEC

TITLE: DDD-Discrete
CRESTLINE-1

SIZE	CODE	DOC. NUMBER	REV
A3	CS	1310A21516	A01

SHEET 20 OF 53

CHANGE by Drawer_Name 14-Jun-2007

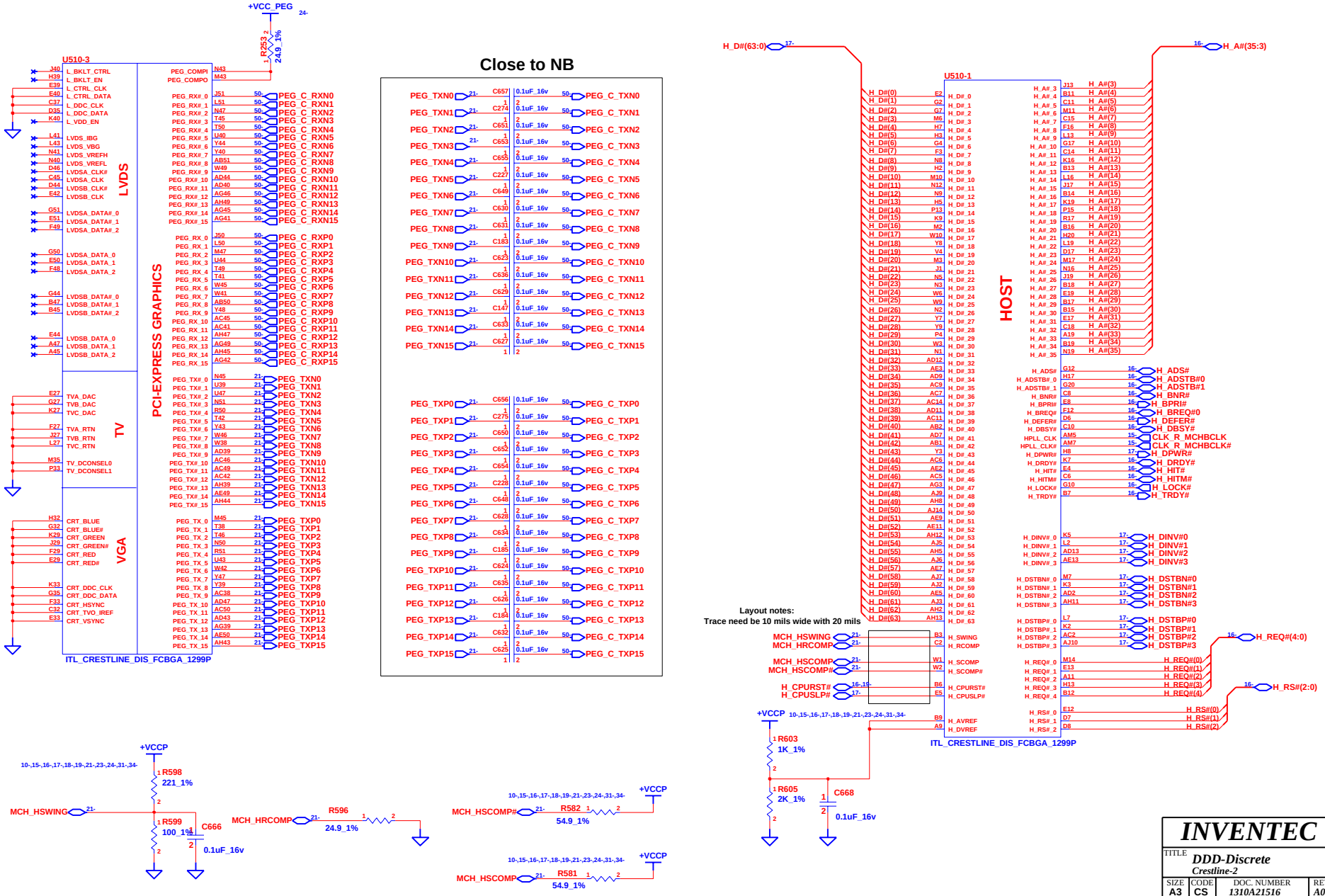

INVENTEC

TITLE **DDD-Discrete**
Crestline-2

SIZE	CODE	DOC. NUMBER	REV
A3	CS	1310A21516	A01

SHEET 21 OF 53

CHANGE by Drawer_Name 14-Jun-2007

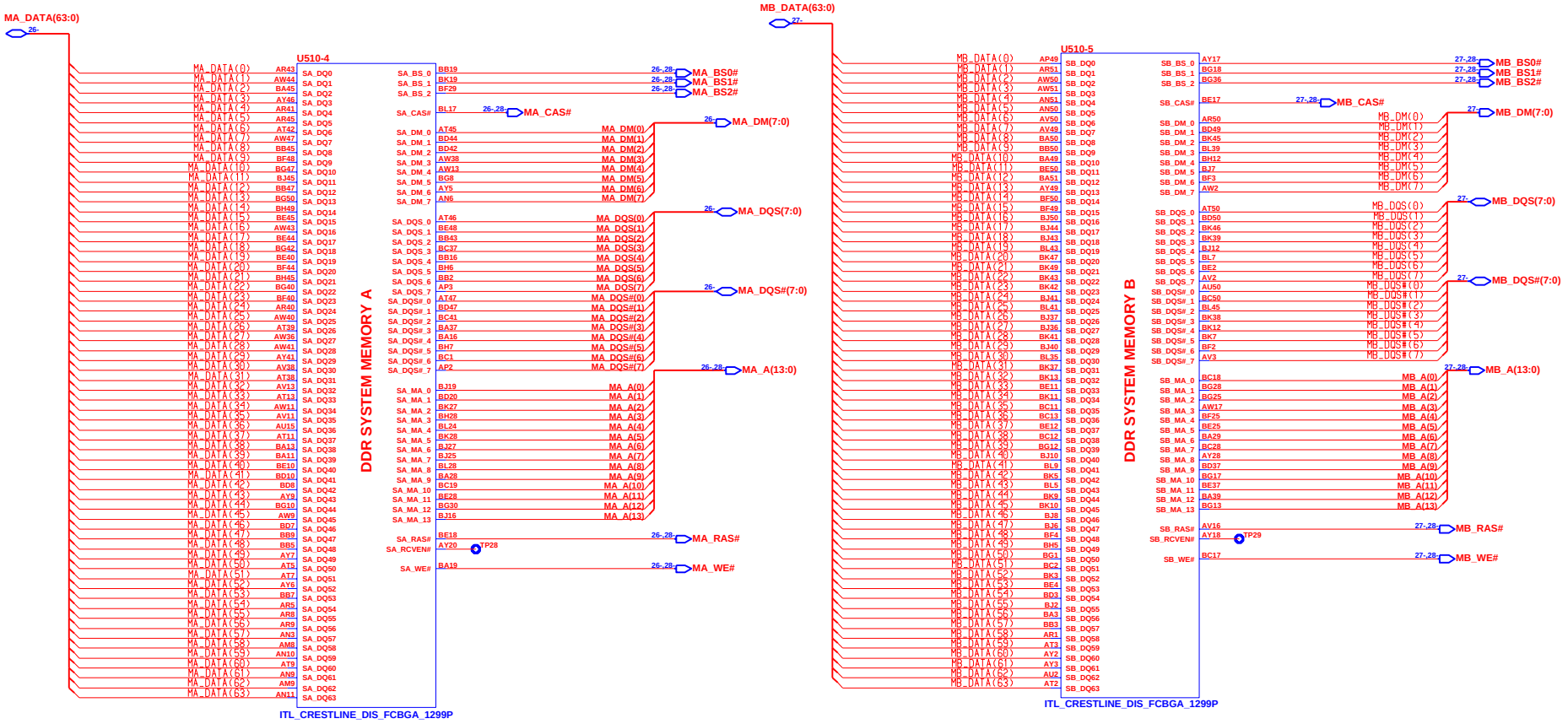

CHANGE by	Drawer_Name	14-Jun-2007	

INVENTEC

TITLE **DDD-Discrete**
CRESTLINE-3

SIZE	CODE	DOC. NUMBER	REV
A3	CS	1310A21516	A01

SHEET 22 OF 53

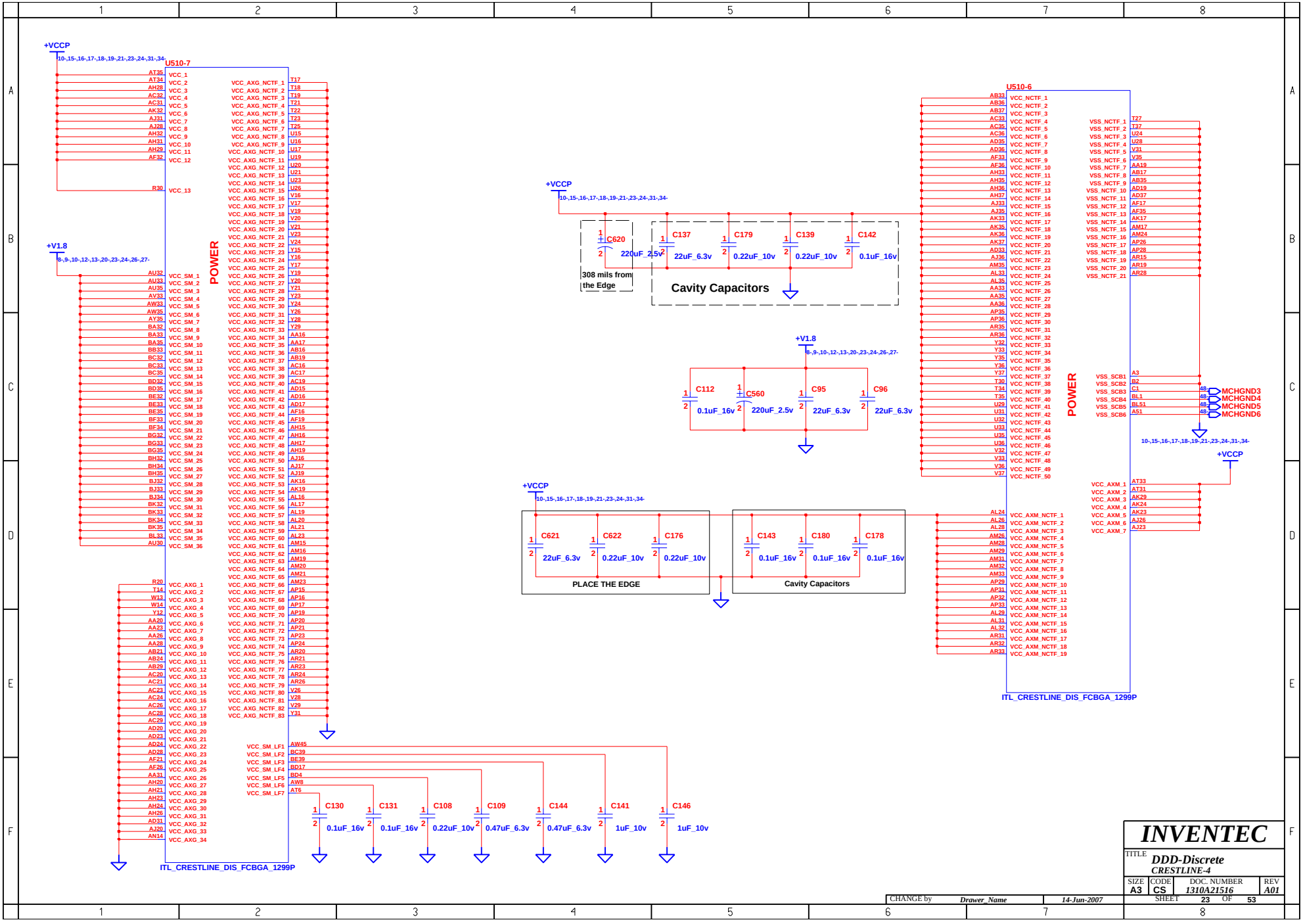
U510-7
POWER
ITL_CRESTLINE_DIS_FCBGA_1299P
+VCCP
+V1.8
C620
220uF_2.5v
308 mils from the Edge
C137
22uF_6.3v
C179
0.22uF_10v
C139
0.22uF_10v
C142
0.1uF_16v
Cavity Capacitors
C112
0.1uF_16v
C560
220uF_2.5v
C95
22uF_6.3v
C96
22uF_6.3v
C621
22uF_6.3v
C622
0.22uF_10v
C176
0.22uF_10v
PLACE THE EDGE
C143
0.1uF_16v
C180
0.1uF_16v
C178
0.1uF_16v
Cavity Capacitors
U510-6
POWER
ITL_CRESTLINE_DIS_FCBGA_1299P
MCHGND3
MCHGND4
MCHGND5
MCHGND6
C130
0.1uF_16v
C131
0.1uF_16v
C108
0.22uF_10v
C109
0.47uF_6.3v
C144
0.47uF_6.3v
C141
1uF_10v
C146
1uF_10v
INVENTEC
TITLE
DDD-Discrete
CRESTLINE-4
SIZE A3
CODE CS
DOC. NUMBER 1310A21516
REV A01
SHEET 23 OF 53
CHANGE by Drawer_Name
14-Jun-2007

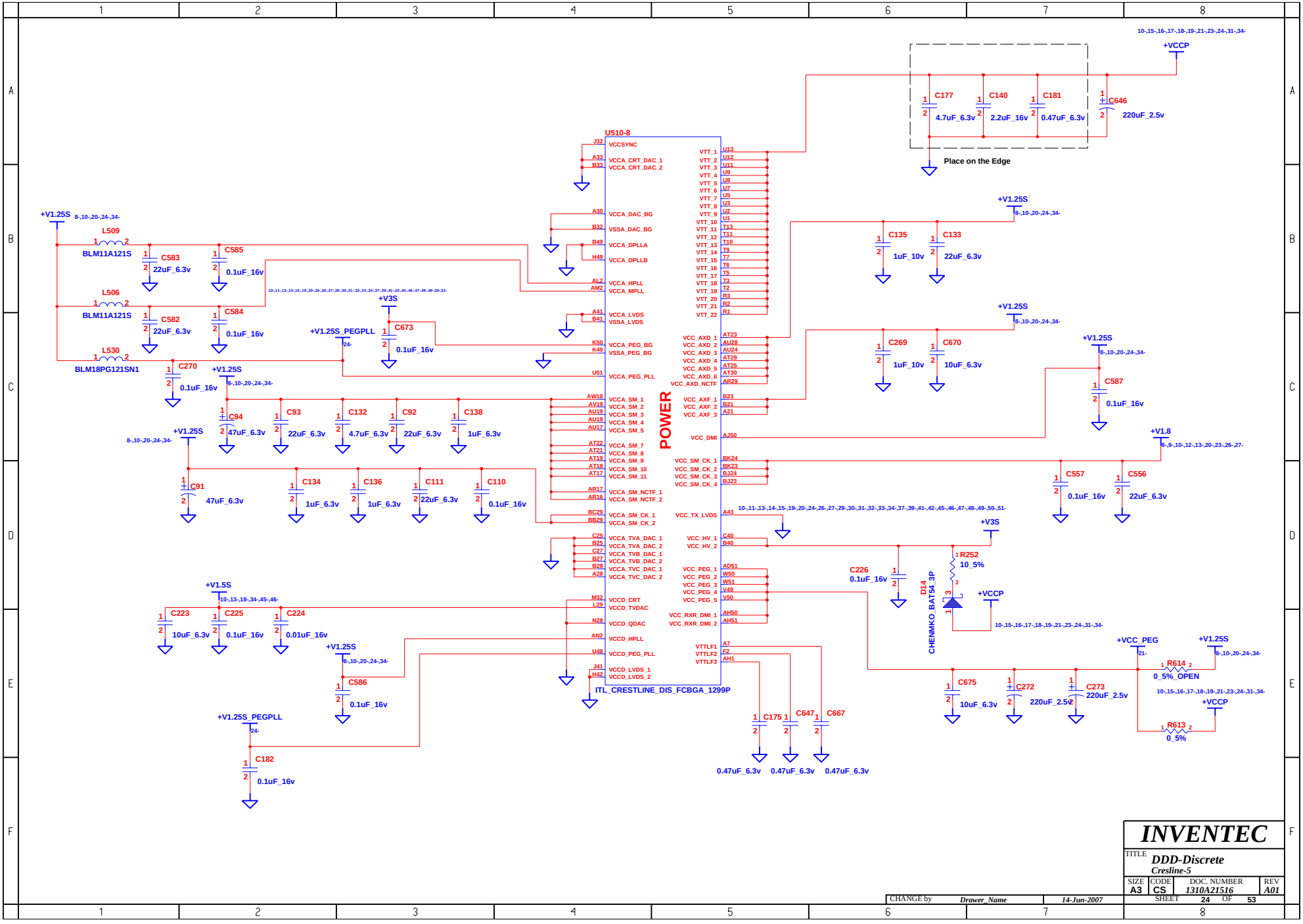
U510-8
POWER
ITL_CRESTLINE_DIS_FCBGA_1299P
VCCSYNC
VCCA_CRT_DAC_1
VCCA_CRT_DAC_2
VCCA_DAC_BG
VSSA_DAC_BG
VCCA_DPLLA
VCCA_DPLLB
VCCA_HPLL
VCCA_MPLL
VCCA_LVDS
VSSA_LVDS
VCCA_PEG_BG
VSSA_PEG_BG
VCCA_PEG_PLL
VCCA_SM_1
VCCA_SM_2
VCCA_SM_3
VCCA_SM_4
VCCA_SM_5
VCCA_SM_7
VCCA_SM_8
VCCA_SM_9
VCCA_SM_10
VCCA_SM_11
VCCA_SM_NCTF_1
VCCA_SM_NCTF_2
VCCA_SM_CK_1
VCCA_SM_CK_2
VCCA_TVA_DAC_1
VCCA_TVA_DAC_2
VCCA_TVB_DAC_1
VCCA_TVB_DAC_2
VCCA_TVC_DAC_1
VCCA_TVC_DAC_2
VCCD_CRT
VCCD_TVDAC
VCCD_QDAC
VCCD_HPLL
VCCD_PEG_PLL
VCCD_LVDS_1
VCCD_LVDS_2
VTT_1
VTT_2
VTT_3
VTT_4
VTT_5
VTT_6
VTT_7
VTT_8
VTT_9
VTT_10
VTT_11
VTT_12
VTT_13
VTT_14
VTT_15
VTT_16
VTT_17
VTT_18
VTT_19
VTT_20
VTT_21
VTT_22
VCC_AXD_1
VCC_AXD_2
VCC_AXD_3
VCC_AXD_4
VCC_AXD_5
VCC_AXD_6
VCC_AXD_NCTF
VCC_AXF_1
VCC_AXF_2
VCC_AXF_3
VCC_DMI
VCC_SM_CK_1
VCC_SM_CK_2
VCC_SM_CK_3
VCC_SM_CK_4
VCC_TX_LVDS
VCC_HV_1
VCC_HV_2
VCC_PEG_1
VCC_PEG_2
VCC_PEG_3
VCC_PEG_4
VCC_PEG_5
VCC_RXR_DMI_1
VCC_RXR_DMI_2
VTTLF1
VTTLF2
VTTLF3
Place on the Edge
+VCCP
C177 4.7uF_6.3v
C140 2.2uF_16v
C181 0.47uF_6.3v
C646 220uF_2.5v
+V1.25S
C135 1uF_10v
C133 22uF_6.3v
C269 1uF_10v
C670 10uF_6.3v
C587 0.1uF_16v
+V1.8
C557 0.1uF_16v
C556 22uF_6.3v
+V3S
R252 10_5%
D14 CHENMKO_BAT54_3P
C226 0.1uF_16v
+VCC_PEG
R614 0_5%_OPEN
R613 0_5%
C675 10uF_6.3v
C272 220uF_2.5v
C273 220uF_2.5v
C175 0.47uF_6.3v
C647 0.47uF_6.3v
C667 0.47uF_6.3v
+V1.25S_PEGPLL
C182 0.1uF_16v
C586 0.1uF_16v
+V1.5S
C223 10uF_6.3v
C225 0.1uF_16v
C224 0.01uF_16v
L509 BLM11A121S
L506 BLM11A121S
L530 BLM18PG121SN1
C583 22uF_6.3v
C585 0.1uF_16v
C582 22uF_6.3v
C584 0.1uF_16v
C270 0.1uF_16v
C673 0.1uF_16v
C94 47uF_6.3v
C93 22uF_6.3v
C132 4.7uF_6.3v
C92 22uF_6.3v
C138 1uF_6.3v
C91 47uF_6.3v
C134 1uF_6.3v
C136 1uF_6.3v
C111 22uF_6.3v
C110 0.1uF_16v
INVENTEC
TITLE DDD-Discrete
Cresline-5
SIZE A3
CODE CS
DOC. NUMBER 1310A21516
REV A01
SHEET 24 OF 53
CHANGE by Drawer_Name
14-Jun-2007

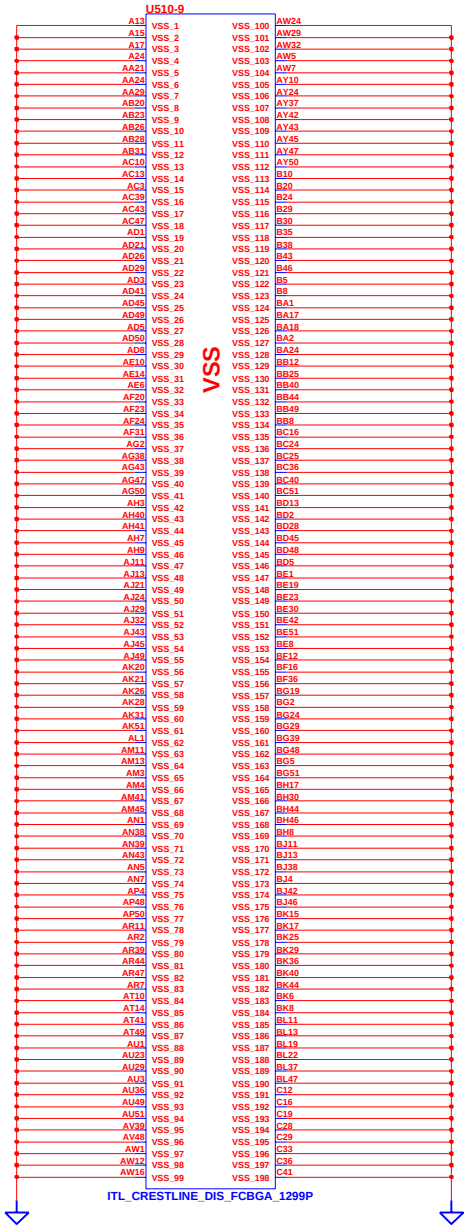

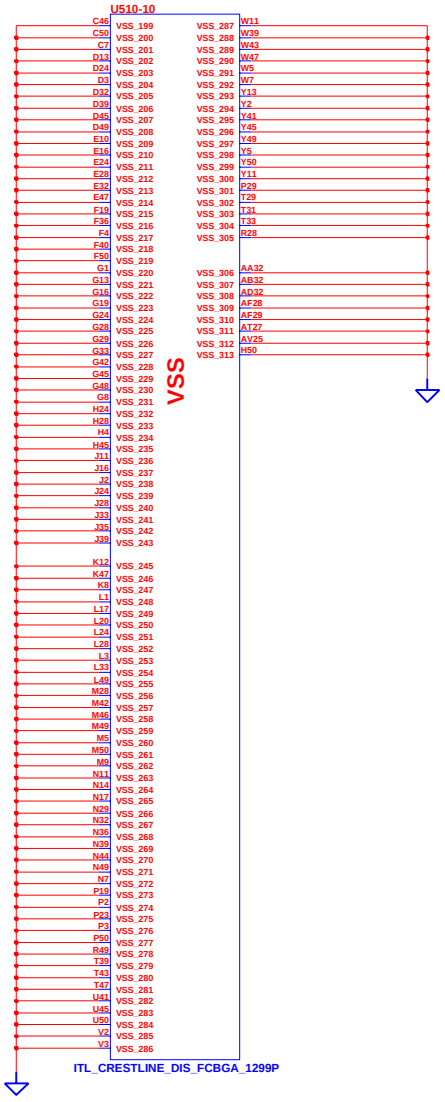

INVENTEC			
TITLE DDD-Discrete CRESTLINE-6			
SIZE A3	CODE CS	DOC. NUMBER 1310A21516	REV A01
CHANGE by Drawer_Name	14-Jun-2007	SHEET 25 OF 53	

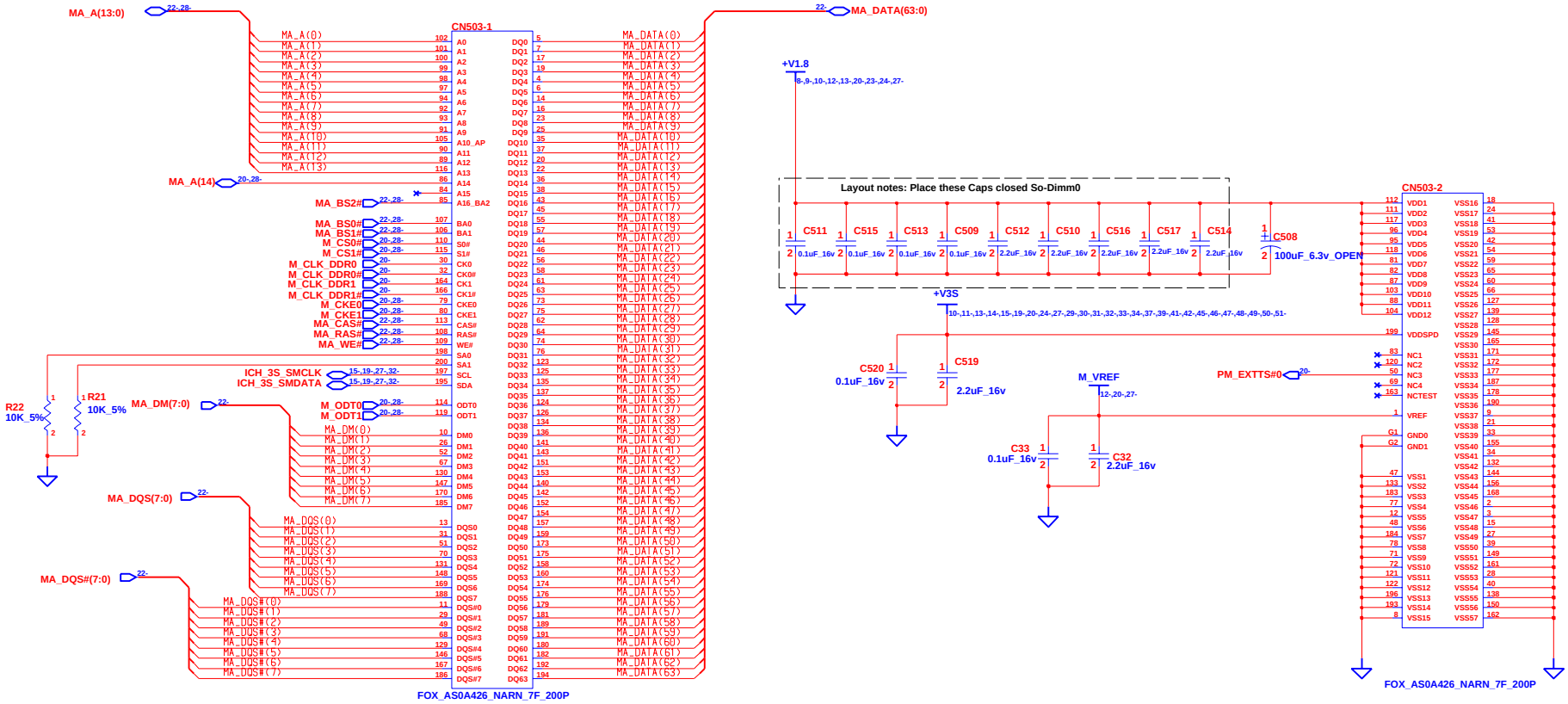

SO DIMM0_9.2mm

INVENTEC			
TITLE	DDD-Discrete DDR2-DIMM-0		
SIZE A3	CODE CS	DOC. NUMBER 1310A21516	REV A01
CHANGE by Drawer_Name	14-Jun-2007	SHEET 26 OF 53	

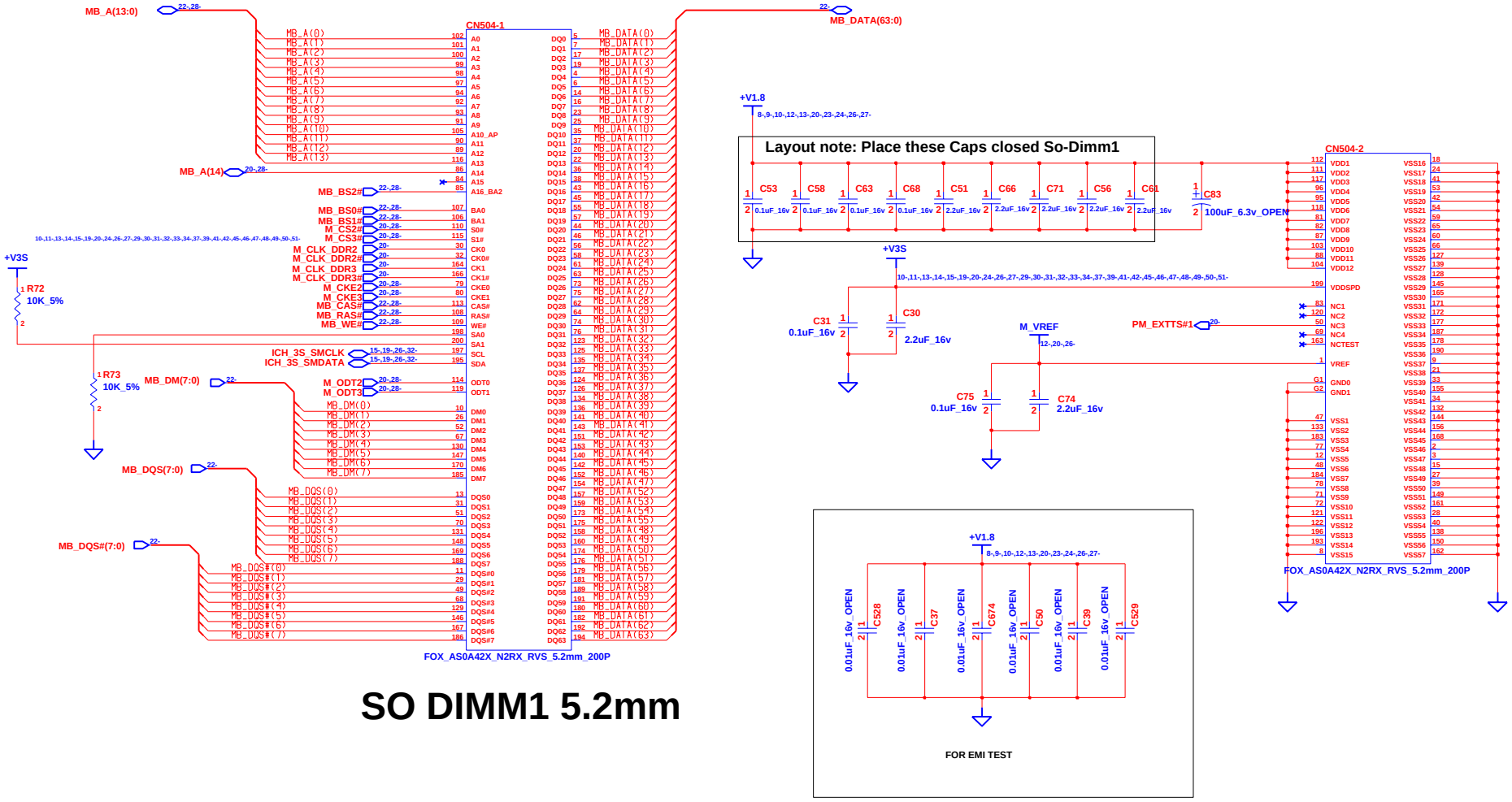

SO DIMM1 5.2mm

CHANGE by	Drawer_Name	14-Jun-2007	

INVENTEC

TITLE *DDD-Discrete*
DDR2-DIMM1

SIZE	CODE	DOC. NUMBER	REV
A3	CS	1310A21516	A01

SHEET 27 OF 53

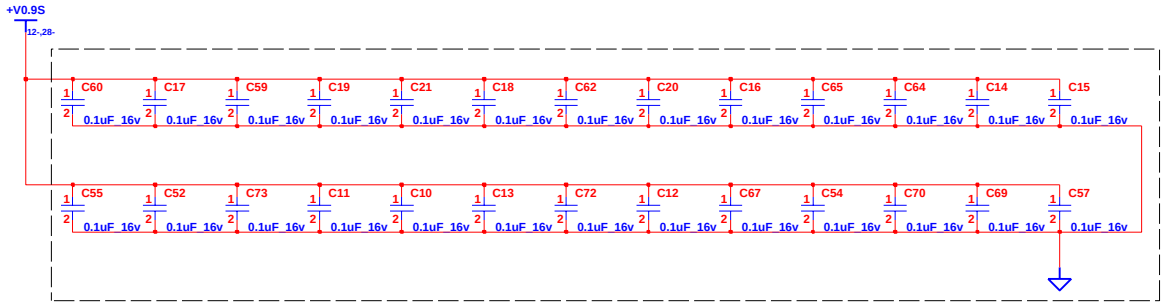

LAYOUT NOTES : PLACE ONE CAP CLOSE TO EVERY 2 PULL UP RESISTOR TERMINATED TO +V0.9S

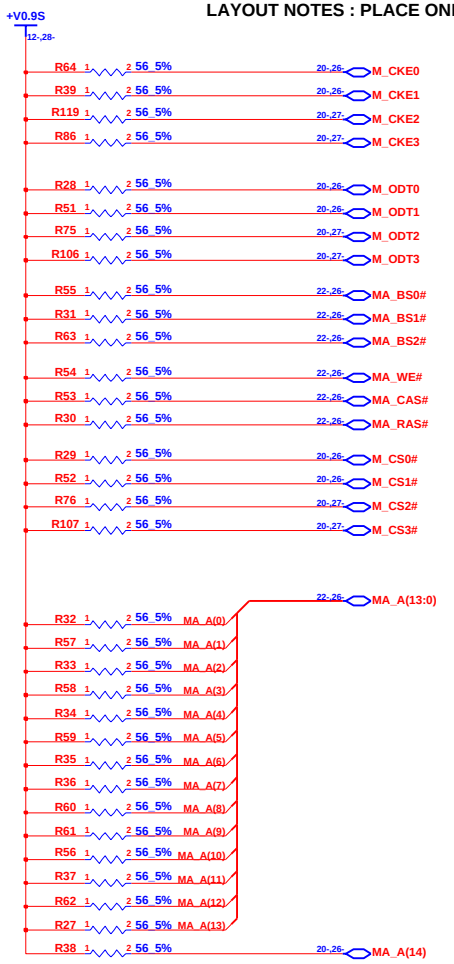

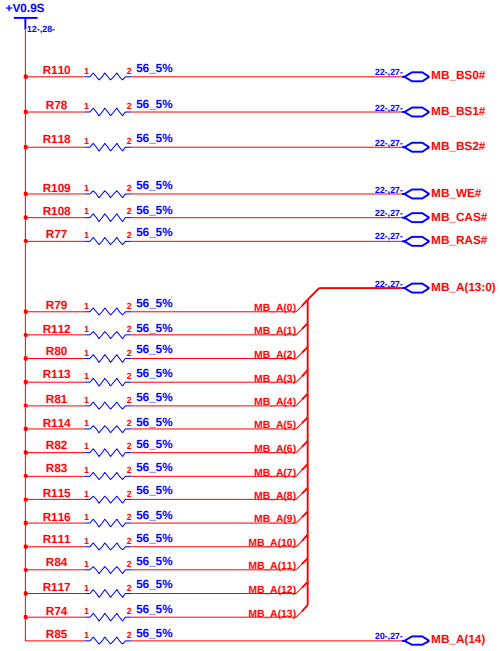

CHANGE by	Drawer_Name	27-Sep-2003	

INVENTEC

TITLE **DDD-Discrete**
DDR2-DAMPING

SIZE	CODE	DOC. NUMBER	REV
A3	CS	1310A21516	A01

SHEET 28 OF 53

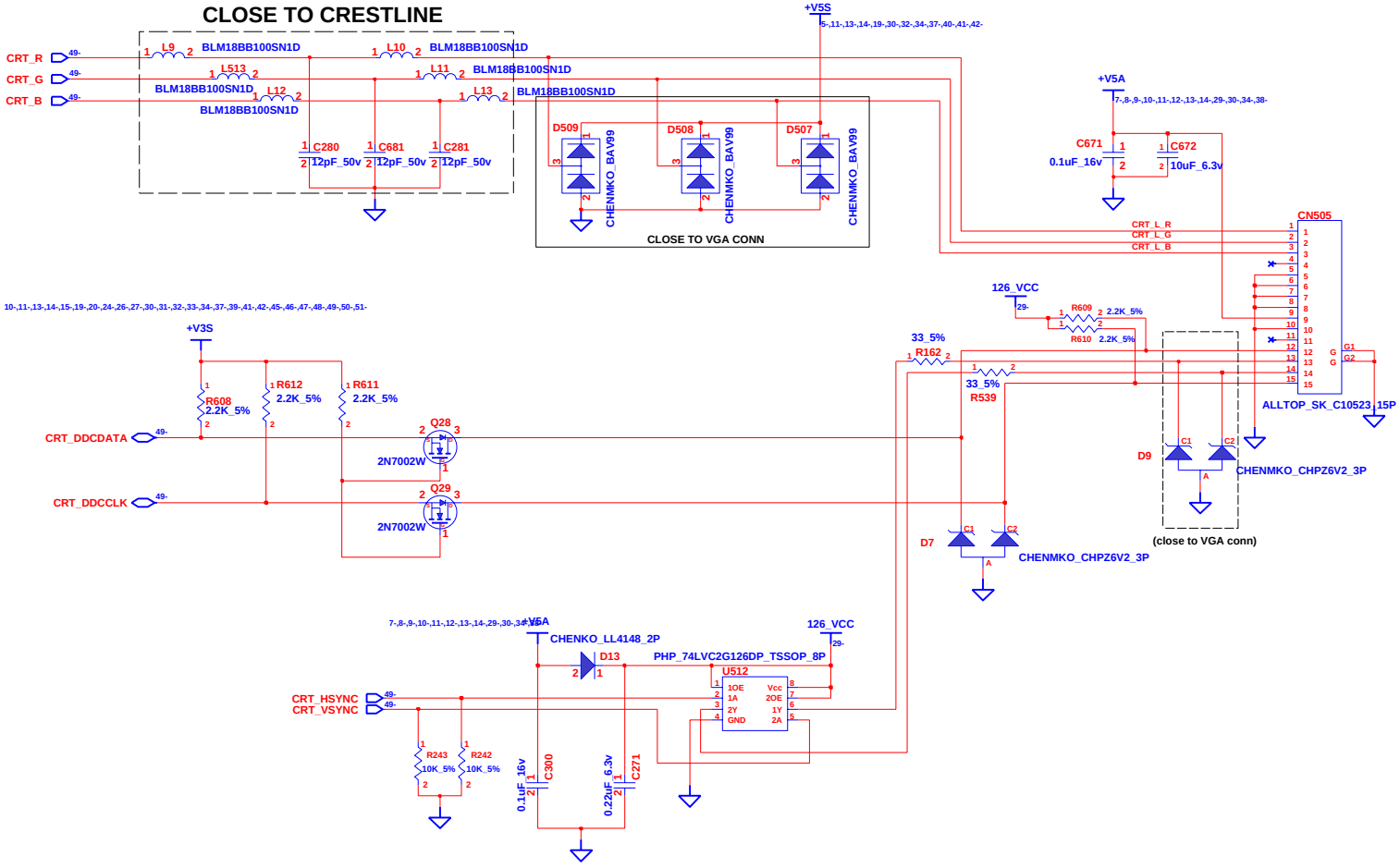

INVENTEC

TITLE DDD-Discrete
VGA CONN

SIZE	CODE	DOC. NUMBER	REV
A3	CS	1310A21516	A01

SHEET 29 OF 53

CHANGE by Drawer_Name 14-Jun-2007

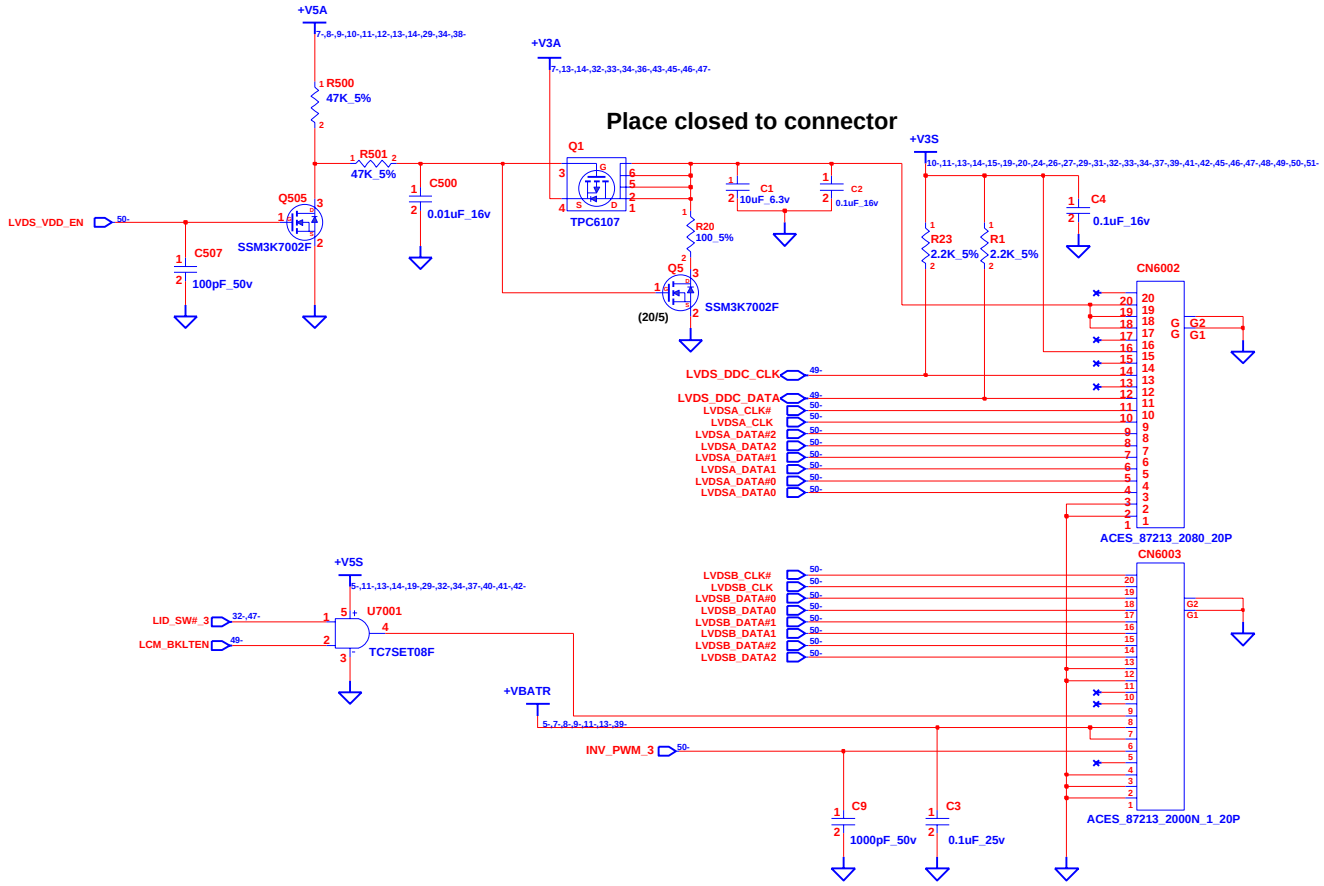

INVENTEC

TITLE **DDD-Discrete**
LCM CONN

SIZE	CODE	DOC. NUMBER	REV
A3	CS	1310A21516	A01

SHEET 30 OF 53

CHANGE by Drawer_Name 14-Jun-2007

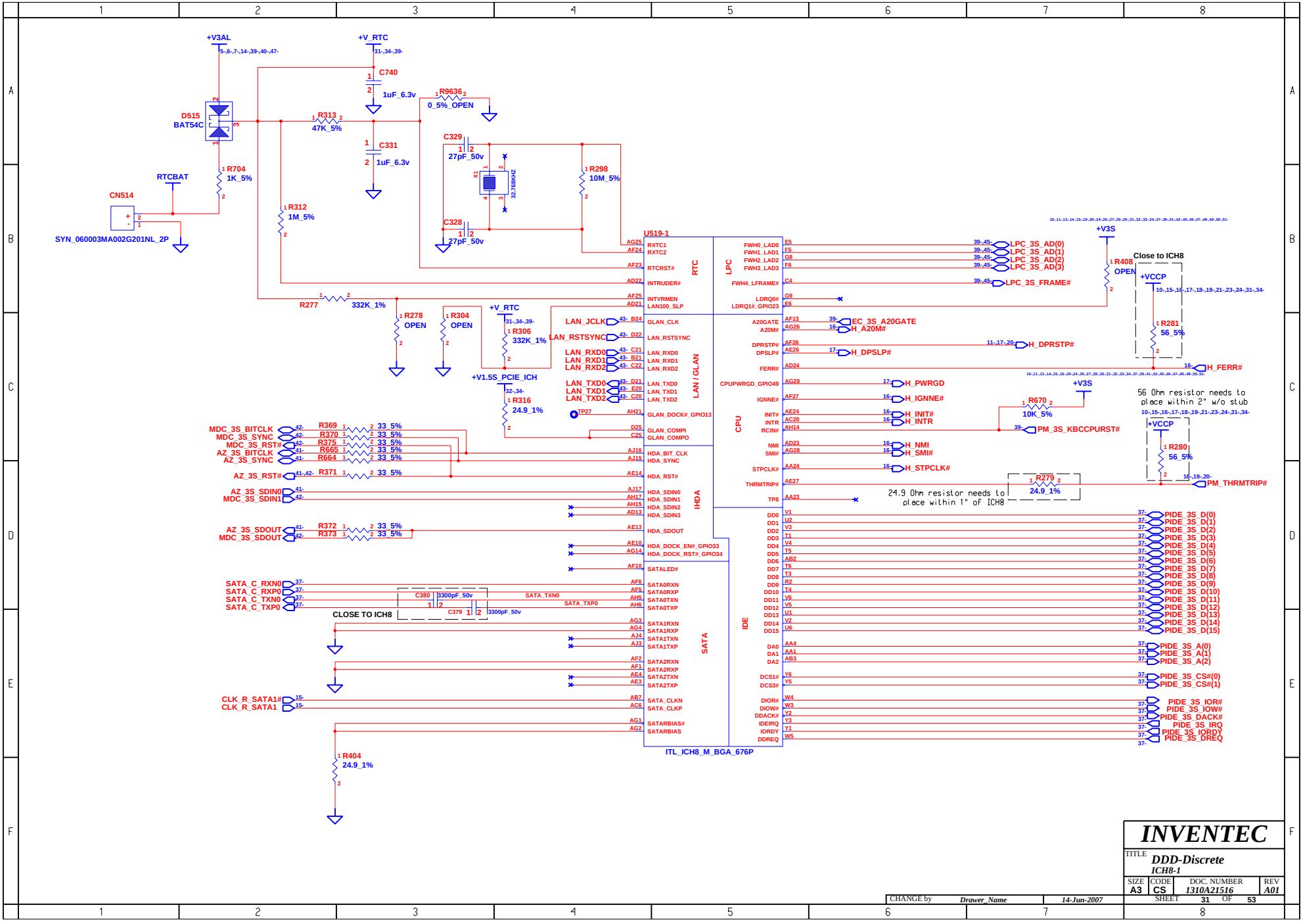

INVENTEC

TITLE DDD-Discrete
ICH8-1

SIZE	CODE	DOC. NUMBER	REV
A3	CS	1310A21516	A01

SHEET 31 OF 53

CHANGE by Drawer_Name 14-Jun-2007

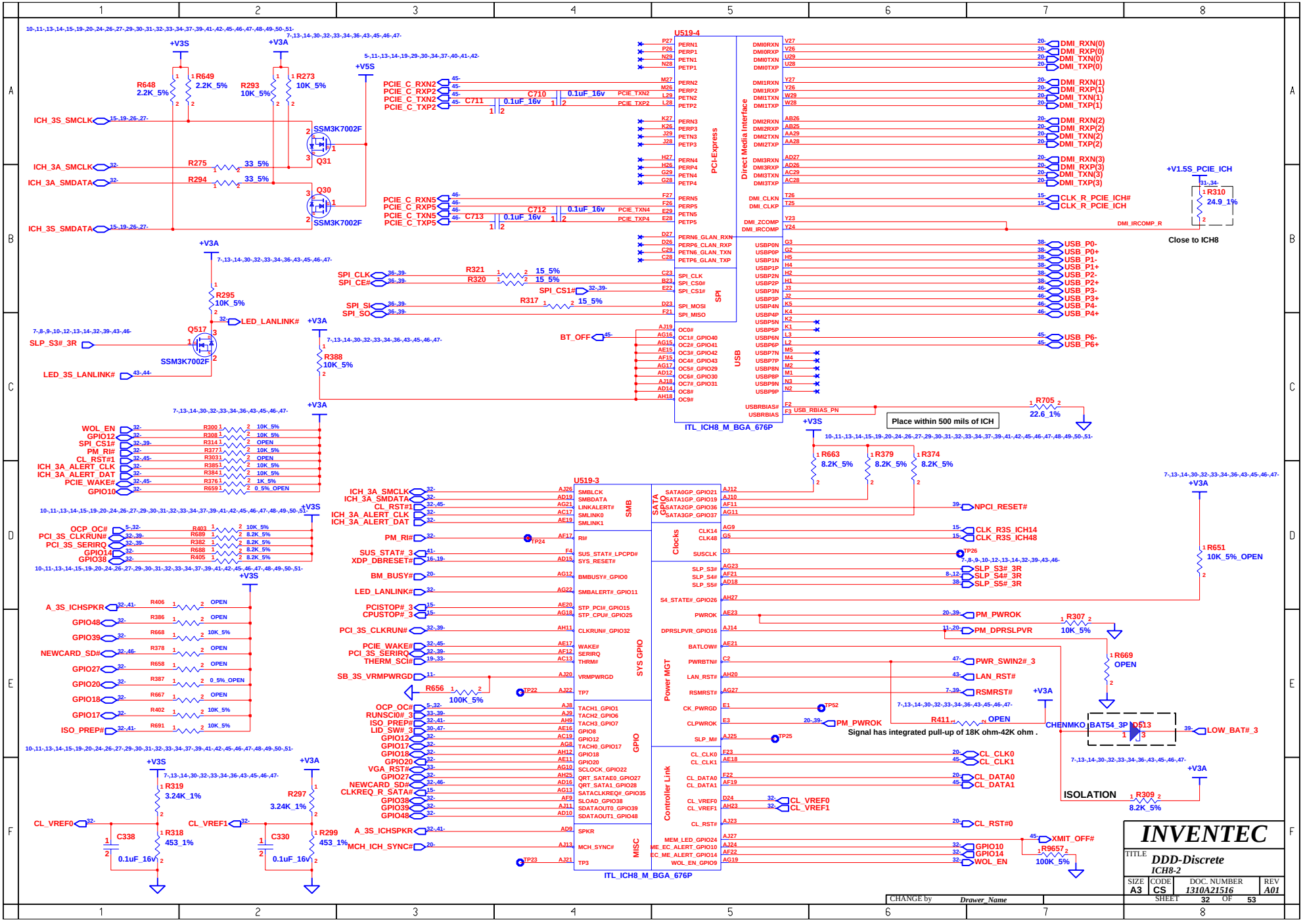
U519-4
PCI-Express
Direct Media Interface
SPI
USB
ITL_ICH8_M_BGA_676P
U519-3
SMB
SATA GPIO
Clocks
Power MGT
SYS GPIO
GPIO
Controller Link
MISC
ITL_ICH8_M_BGA_676P
Place within 500 mils of ICH
Close to ICH8
Signal has integrated pull-up of 18K ohm-42K ohm .
ISOLATION
CHENMKO BAT54_3P
INVENTEC
TITLE DDD-Discrete
ICH8-2
SIZE A3 CODE CS DOC. NUMBER 1310A21516 REV A01
SHEET 32 OF 53
CHANGE by Drawer_Name

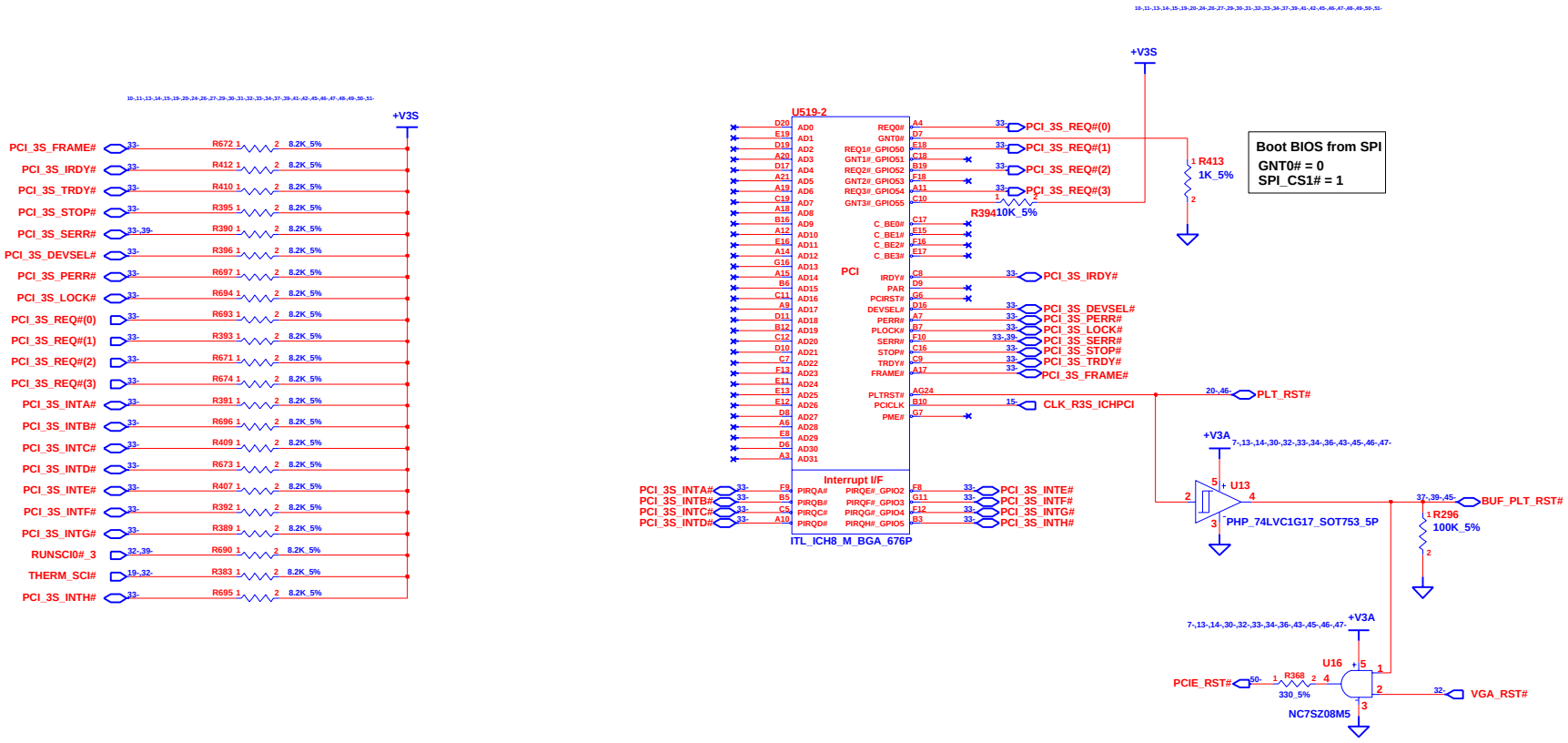

INVENTEC

TITLE **DDD-Discrete**
ICH8-3

SIZE	CODE	DOC. NUMBER	REV
A3	CS	1310A21516	A01

CHANGE by Drawer_Name 14-Jun-2007

SHEET 33 OF 53

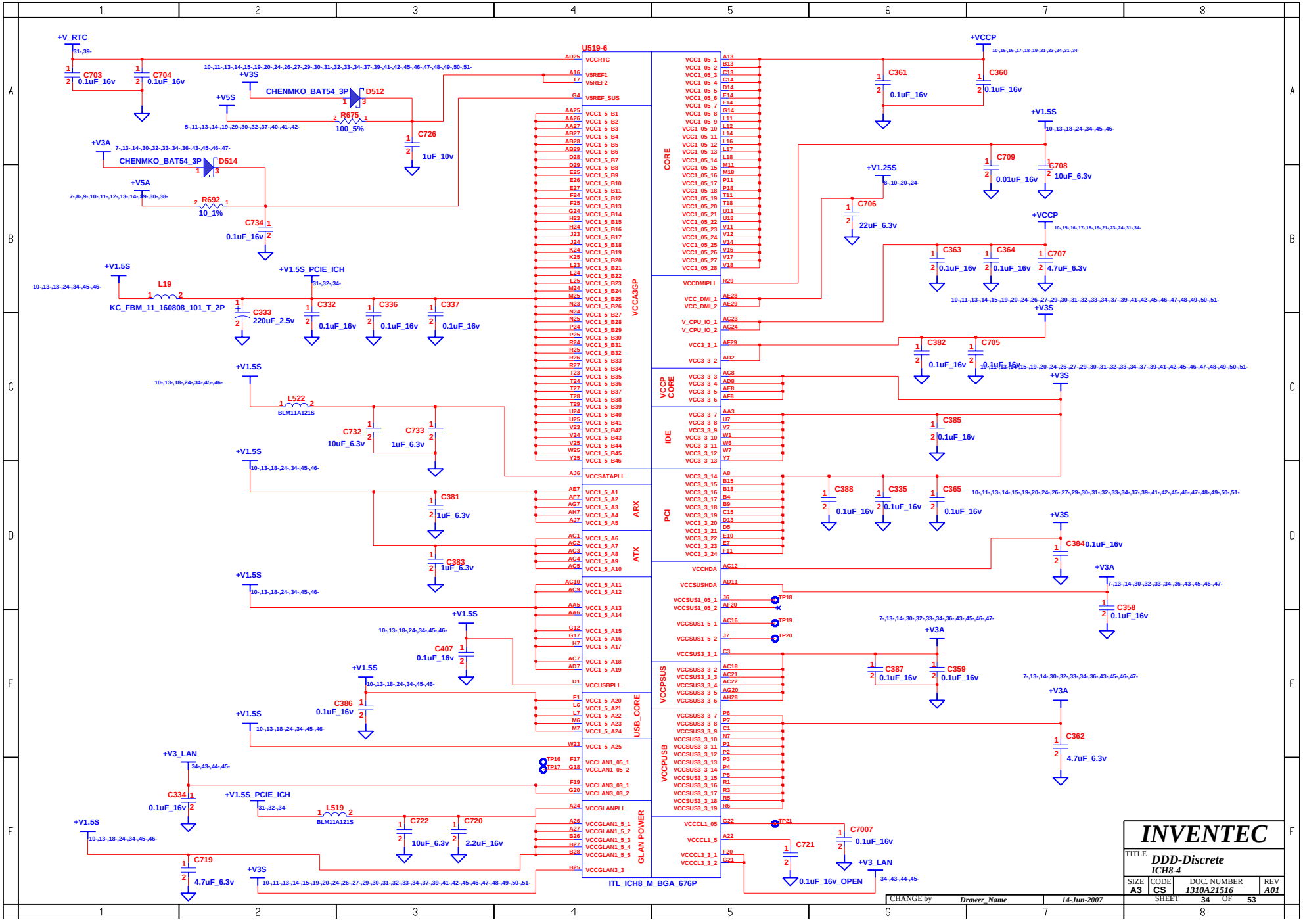
U519-6
ITL_ICH8_M_BGA_676P
CORE
VCCA3GP
VCCP CORE
IDE
PCI
ARX
ATX
USB_CORE
VCCPSUS
VCCPLSB
GLAN POWER
+V_RTC
+V3S
+V5S
+V3A
+V5A
+V1.5S
+V1.5S_PCIE_ICH
+V1.25S
+VCCP
+V3_LAN
CHENMKO_BAT54_3P D512
CHENMKO_BAT54_3P D514
R675 100_5%
R692 10_1%
L19 KC_FBM_11_160808_101_T_2P
L522 BLM11A121S
L519 BLM11A121S
C703 0.1uF_16v
C704 0.1uF_16v
C726 1uF_10v
C734 0.1uF_16v
C333 220uF_2.5v
C332 0.1uF_16v
C336 0.1uF_16v
C337 0.1uF_16v
C732 10uF_6.3v
C733 1uF_6.3v
C381 1uF_6.3v
C383 1uF_6.3v
C407 0.1uF_16v
C386 0.1uF_16v
C334 0.1uF_16v
C722 10uF_6.3v
C720 2.2uF_16v
C719 4.7uF_6.3v
C721 0.1uF_16v_OPEN
C7007 0.1uF_16v
C361 0.1uF_16v
C360 0.1uF_16v
C709 0.01uF_16v
C708 10uF_6.3v
C706 22uF_6.3v
C363 0.1uF_16v
C364 0.1uF_16v
C707 4.7uF_6.3v
C382 0.1uF_16v
C705 0.1uF_16v
C385 0.1uF_16v
C388 0.1uF_16v
C335 0.1uF_16v
C365 0.1uF_16v
C384 0.1uF_16v
C358 0.1uF_16v
C387 0.1uF_16v
C359 0.1uF_16v
C362 4.7uF_6.3v
TP18
TP19
TP20
TP21
TP16
TP17
INVENTEC
TITLE DDD-Discrete
ICH8-4
SIZE A3
CODE CS
DOC. NUMBER 1310A21516
REV A01
SHEET 34 OF 53
CHANGE by Drawer_Name
14-Jun-2007

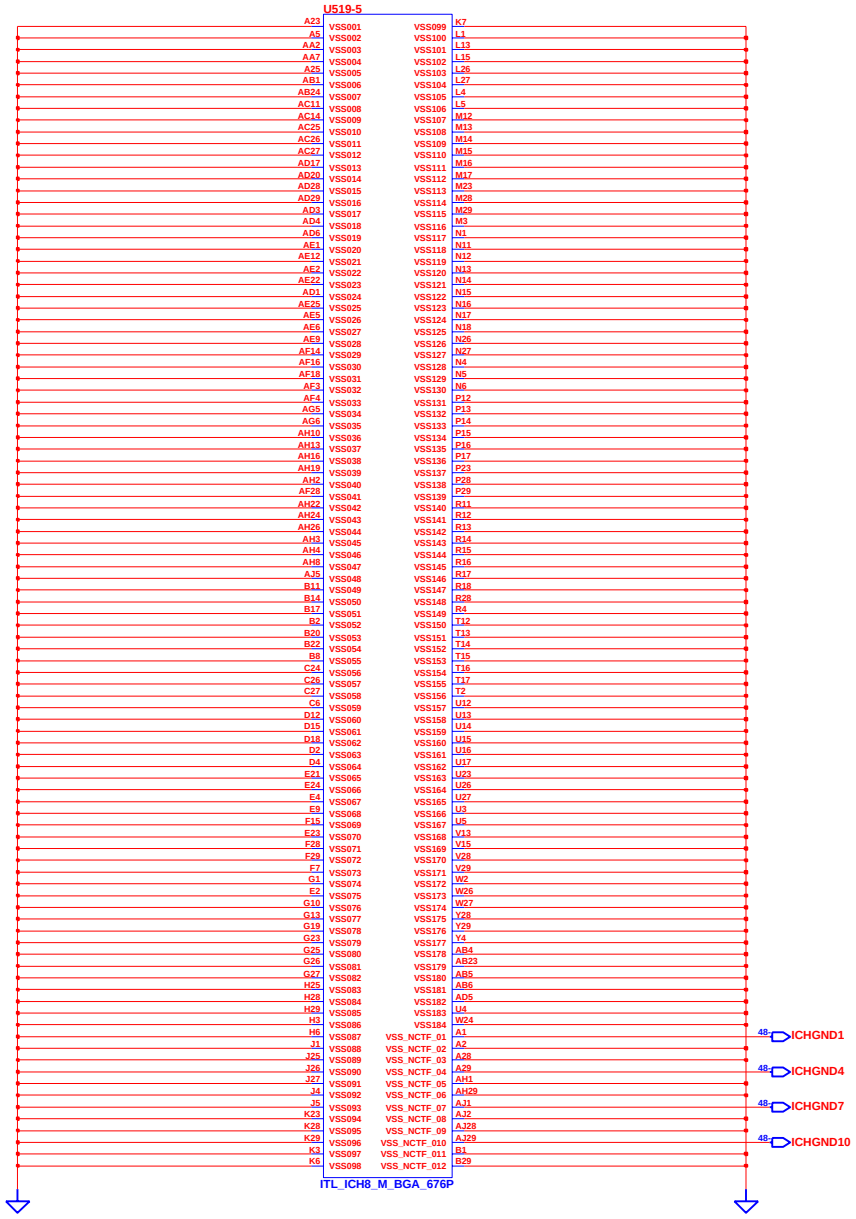

CHANGE by	Drawer_Name	14-Jun-2007	

INVENTEC

TITLE *DDD-Discrete*
ICH8-5

SIZE	CODE	DOC. NUMBER	REV
A3	CS	1310A21516	A01

SHEET 35 OF 53

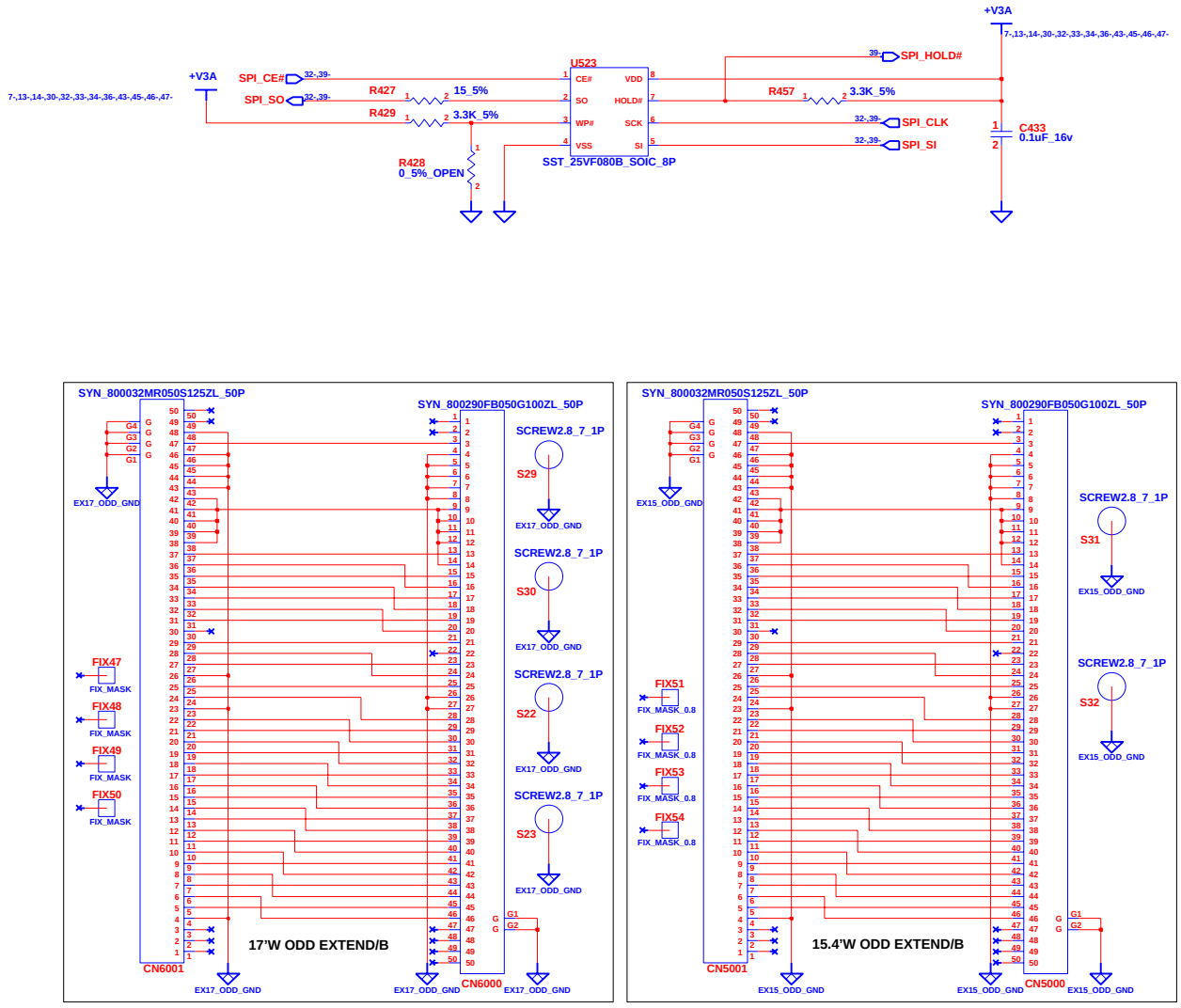

INVENTEC

TITLE
DDD-Discrete
SYSTEM BIOS&ODD EXT/B

SIZE	CODE	DOC. NUMBER	REV
A3	CS	1310A21516	A01

CHANGE by Drawer_Name 14-Jun-2007

SHEET 36 OF 53

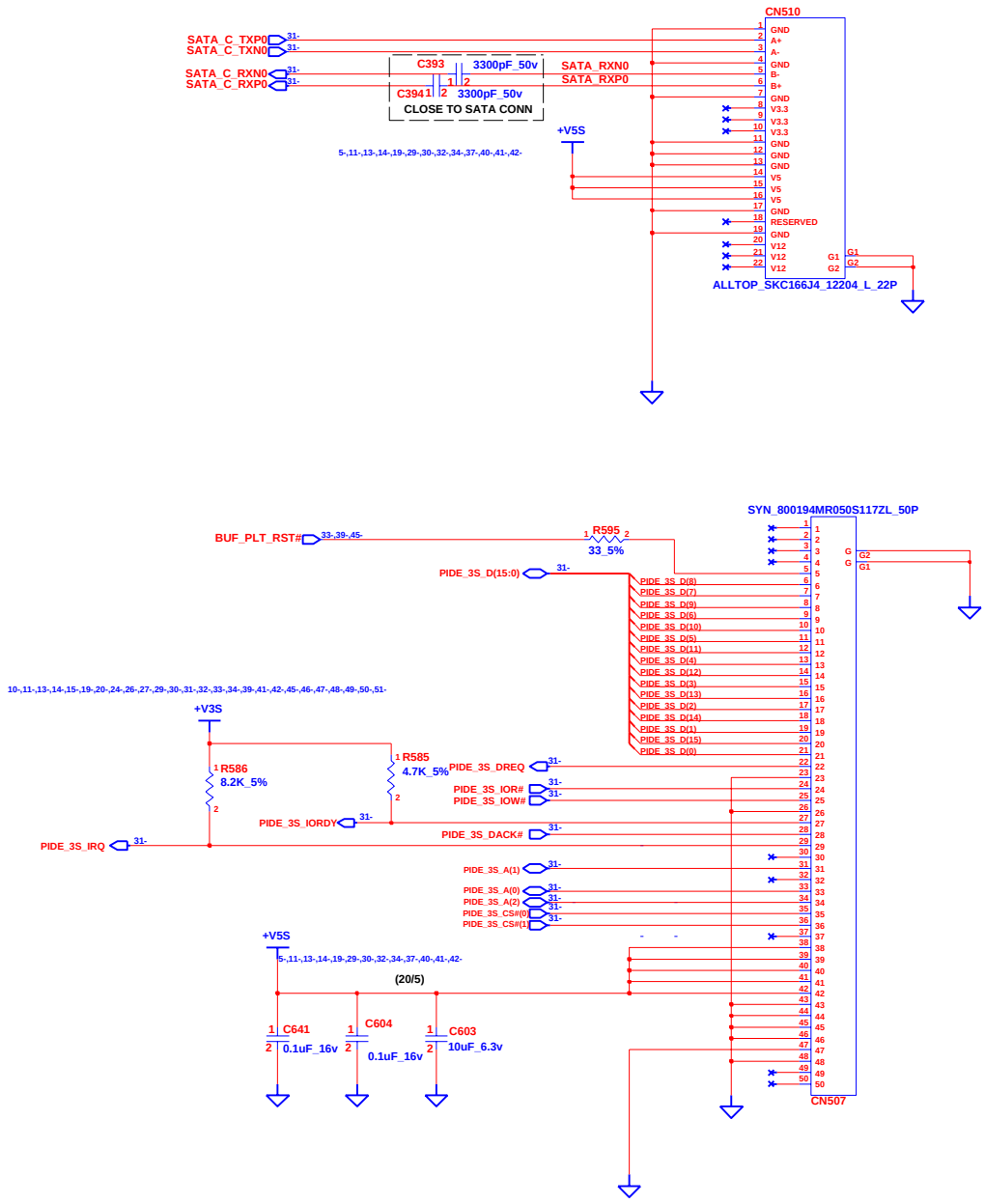

INVENTEC			
TITLE DDD-Discrete HDD & ODD CONN			
SIZE A3	CODE CS	DOC. NUMBER 1310A21516	REV A01
CHANGE by Drawer_Name	14-Jun-2007	SHEET 37 OF 53	

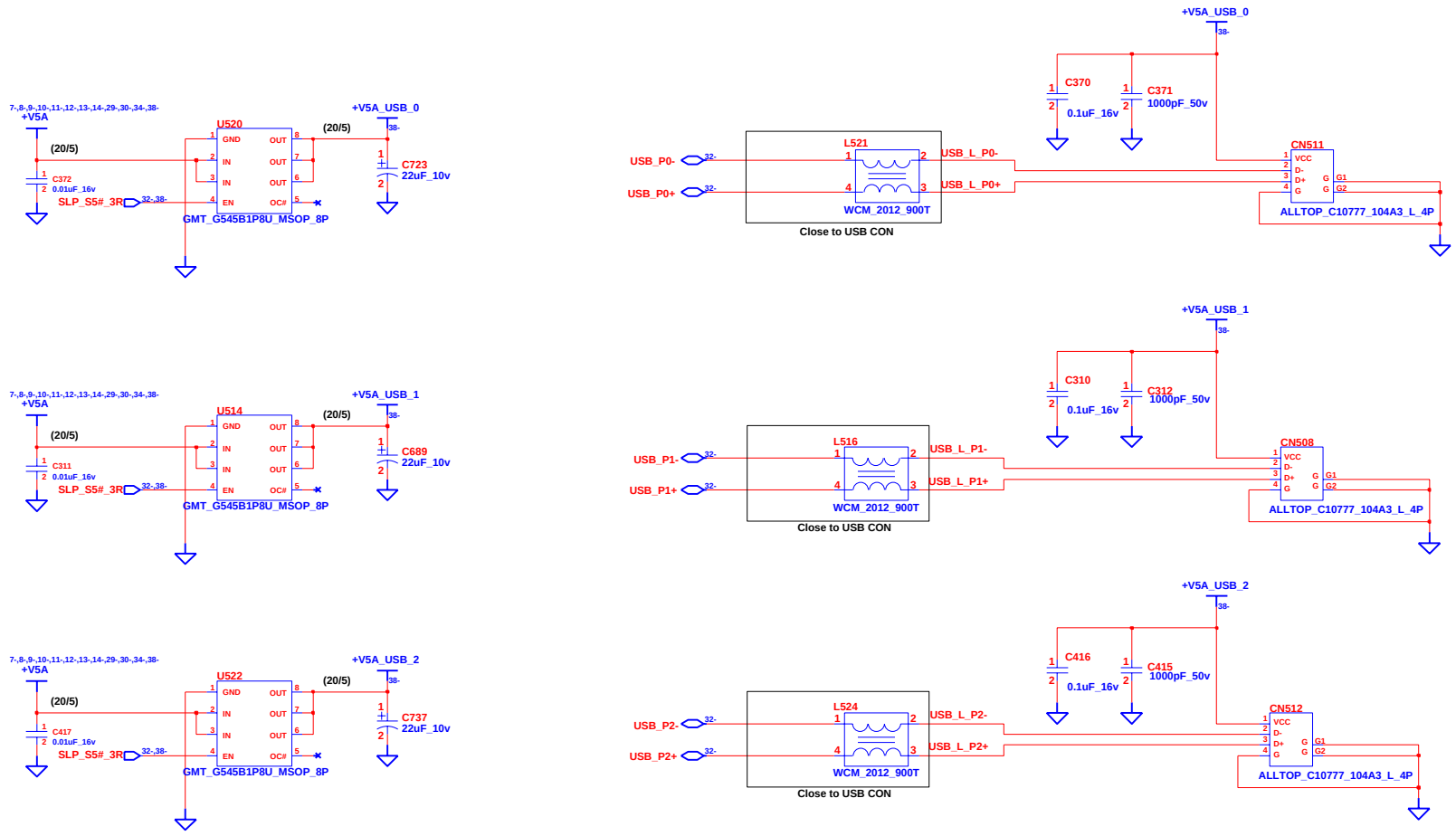

Close to USB CON

INVENTEC

TITLE **DDD-Discrete**
USB CONN

SIZE	CODE	DOC. NUMBER	REV
A3	CS	1310A21516	A01

CHANGE by *Drawer_Name* *14-Jun-2007*

SHEET 38 OF 53

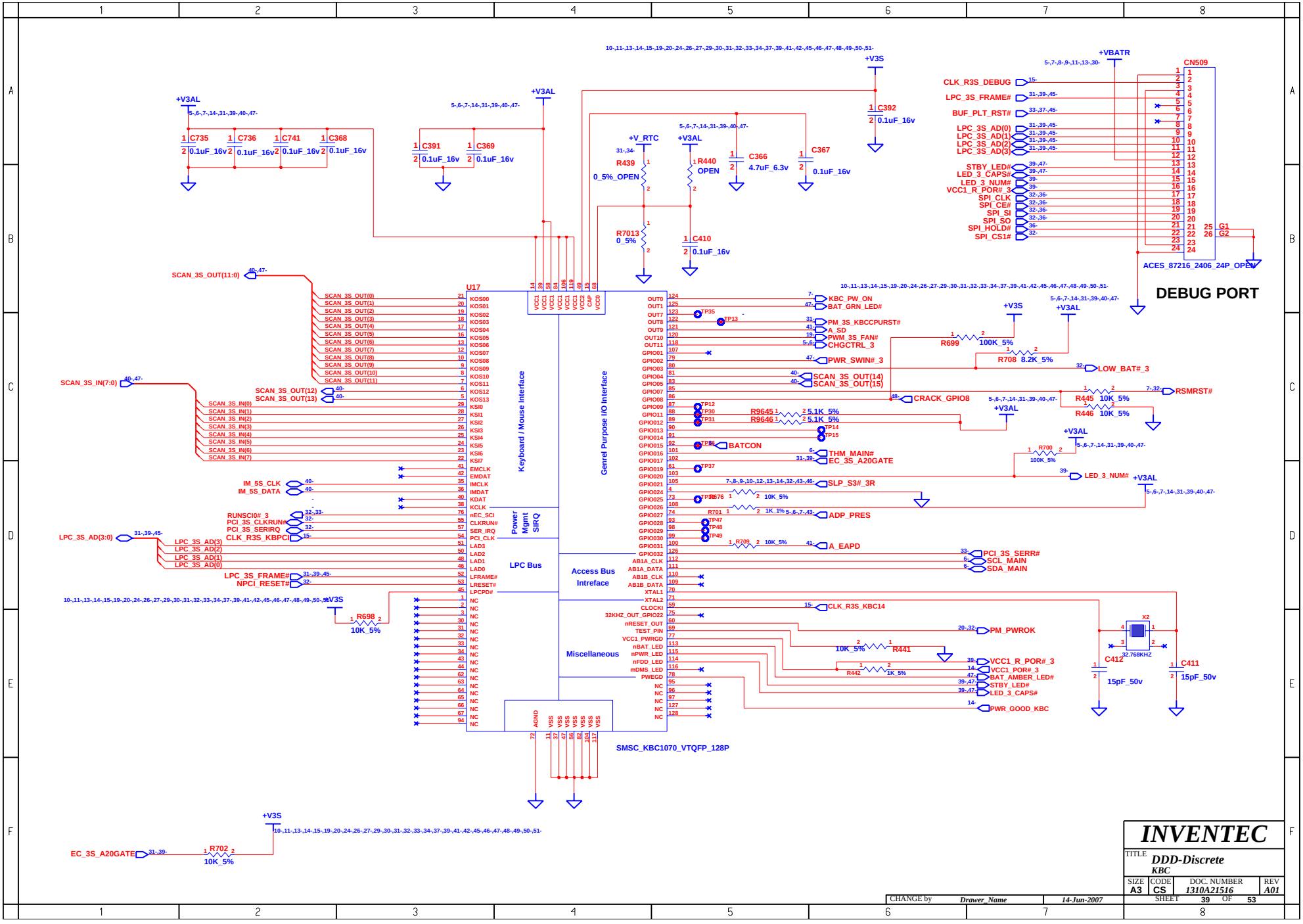
DEBUG PORT
CN509
ACES_87216_2406_24P_OPEN
U17
SMSC_KBC1070_VTQFP_128P
Keyboard / Mouse Interface
Genrel Purpose I/O Interface
Power Mgmt SIRQ
LPC Bus
Access Bus Intreface
Miscellaneous
+V3AL
+V3S
+VBATR
+V_RTC
C735 0.1uF_16v
C736 0.1uF_16v
C741 0.1uF_16v
C368 0.1uF_16v
C391 0.1uF_16v
C369 0.1uF_16v
C392 0.1uF_16v
C366 4.7uF_6.3v
C367 0.1uF_16v
C410 0.1uF_16v
R439 0_5%_OPEN
R440 OPEN
R7013 0_5%
R698 10K_5%
R702 10K_5%
R699 100K_5%
R708 8.2K_5%
R445 10K_5%
R446 10K_5%
R700 100K_5%
R441 10K_5%
R442 1K_5%
R9645 5.1K_5%
R9646 5.1K_5%
R701 1K_1%
R709 10K_5%
X2 32.768KHZ
C412 15pF_50v
C411 15pF_50v
SCAN_3S_OUT(11:0)
SCAN_3S_IN(7:0)
LPC_3S_AD(3:0)
EC_3S_A20GATE
CLK_R3S_DEBUG
LPC_3S_FRAME#
BUF_PLT_RST#
LPC_3S_AD(0)
LPC_3S_AD(1)
LPC_3S_AD(2)
LPC_3S_AD(3)
STBY_LED#
LED_3_CAPS#
LED_3_NUM#
VCC1_R_POR#_3
SPI_CLK
SPI_CE#
SPI_SI
SPI_SO
SPI_HOLD#
SPI_CS1#
KBC_PW_ON
BAT_GRN_LED#
PM_3S_KBCCPURST#
A_SD
PWM_3S_FAN#
CHGCTRL_3
PWR_SWIN#_3
LOW_BAT#_3
SCAN_3S_OUT(14)
SCAN_3S_OUT(15)
CRACK_GPIO8
RSMRST#
BATCON
THM_MAIN#
EC_3S_A20GATE
LED_3_NUM#
SLP_S3#_3R
ADP_PRES
A_EAPD
PCI_3S_SERR#
SCL_MAIN
SDA_MAIN
CLK_R3S_KBC14
PM_PWROK
VCC1_R_POR#_3
VCC1_POR#_3
BAT_AMBER_LED#
STBY_LED#
LED_3_CAPS#
PWR_GOOD_KBC
IM_5S_CLK
IM_5S_DATA
RUNSCI0#_3
PCI_3S_CLKRUN#
PCI_3S_SERIRQ
CLK_R3S_KBPCI
LPC_3S_FRAME#
NPCI_RESET#
INVENTEC
TITLE DDD-Discrete
KBC
SIZE A3
CODE CS
DOC. NUMBER 1310A21516
REV A01
SHEET 39 OF 53
CHANGE by Drawer_Name
14-Jun-2007

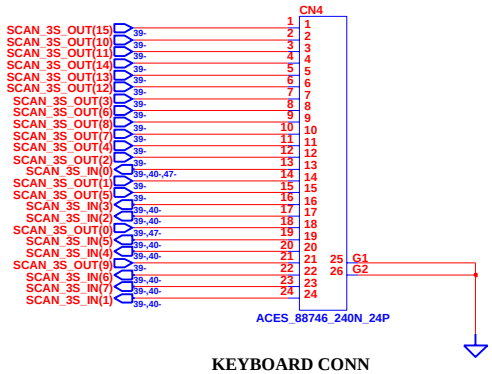

KEYBOARD CONN

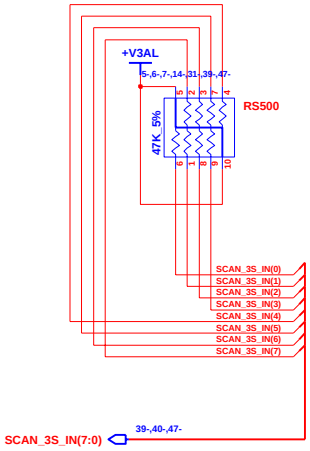

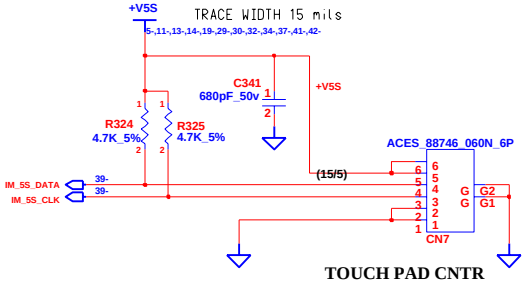

TOUCH PAD CNTR

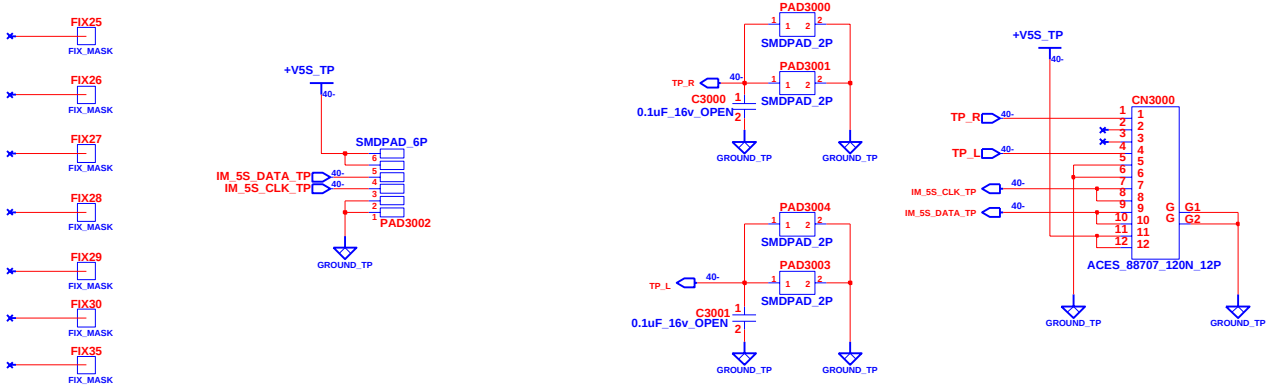

TOUCH PAD BOARD

INVENTEC			
TITLE DDD-Discrete KB & TP CONN			
SIZE A3	CODE CS	DOC. NUMBER 1310A21516	REV A01
CHANGE by Drawer_Name	14-Jun-2007	SHEET 40 OF 53	

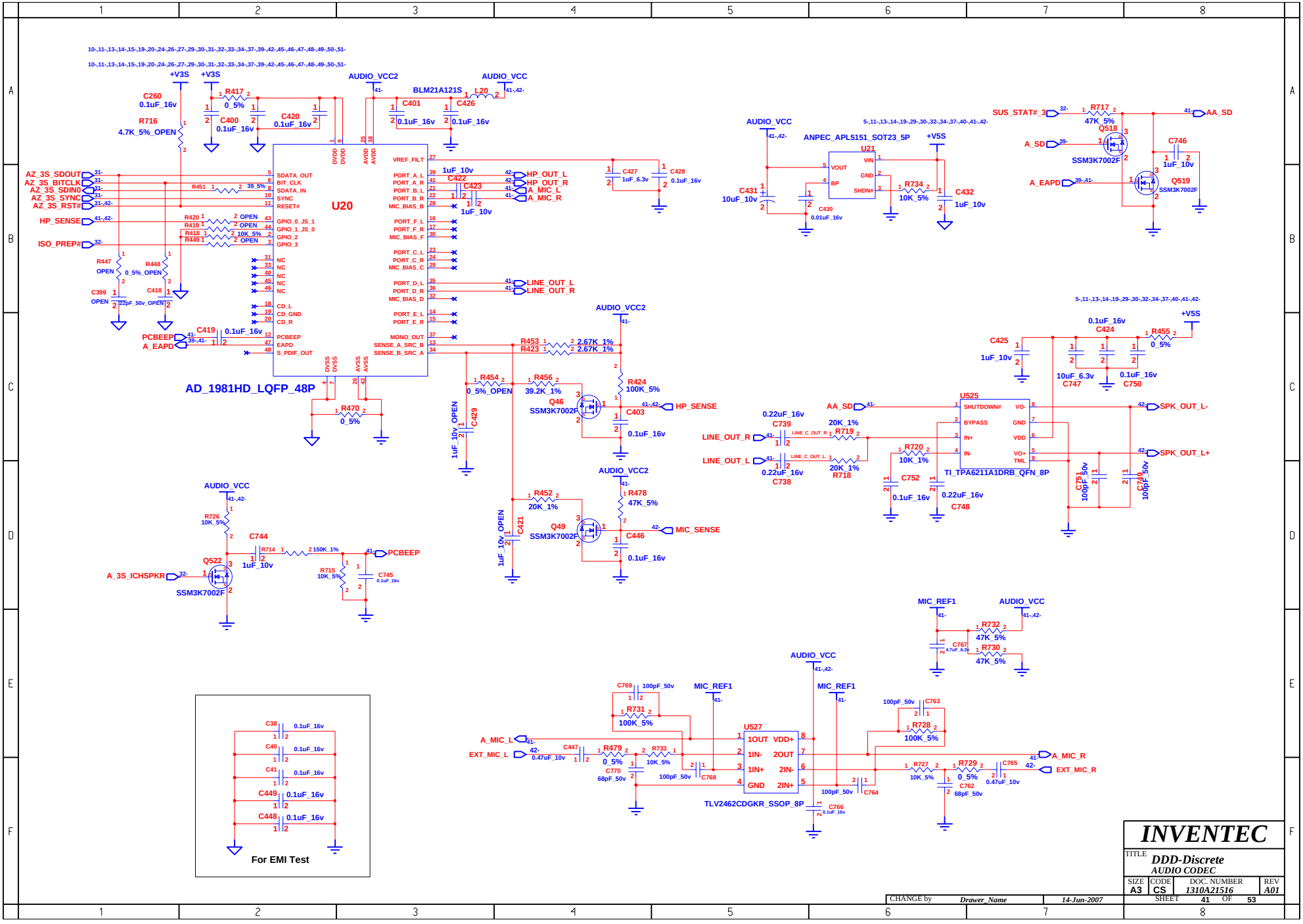
AD_1981HD_LQFP_48P
U20
AZ_3S_SDOUT
AZ_3S_BITCLK
AZ_3S_SDIN0
AZ_3S_SYNC
AZ_3S_RST#
HP_SENSE
ISO_PREP#
PCBEEP
A_EAPD
HP_OUT_L
HP_OUT_R
A_MIC_L
A_MIC_R
LINE_OUT_L
LINE_OUT_R
HP_SENSE
MIC_SENSE
AUDIO_VCC
AUDIO_VCC2
+V3S
+V5S
ANPEC_APL5151_SOT23_5P
U21
SUS_STAT#_3
AA_SD
A_SD
A_EAPD
SSM3K7002F
Q518
Q519
Q46
Q49
Q522
A_3S_ICHSPKR
PCBEEP
U525
TI_TPA6211A1DRB_QFN_8P
SPK_OUT_L-
SPK_OUT_L+
MIC_REF1
U527
TLV2462CDGKR_SSOP_8P
A_MIC_L
EXT_MIC_L
A_MIC_R
EXT_MIC_R
For EMI Test
INVENTEC
TITLE
DDD-Discrete
AUDIO CODEC
SIZE A3
CODE CS
DOC. NUMBER 1310A21516
REV A01
SHEET 41 OF 53
CHANGE by Drawer_Name
14-Jun-2007

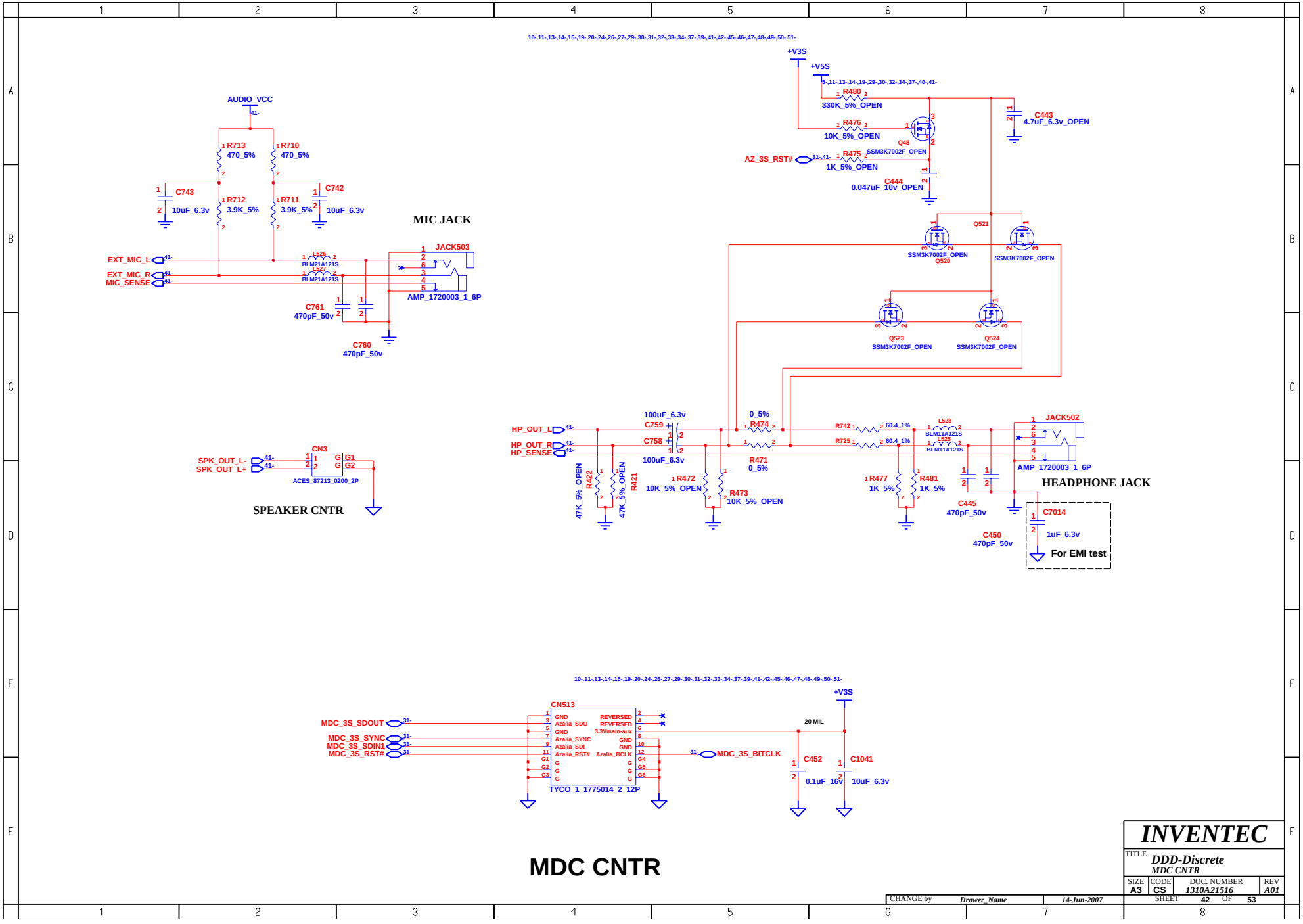
MIC JACK
AUDIO_VCC
R713 470_5%
R710 470_5%
C743 10uF_6.3v
C742 10uF_6.3v
R712 3.9K_5%
R711 3.9K_5%
EXT_MIC_L
EXT_MIC_R
MIC_SENSE
L526 BLM21A121S
L527 BLM21A121S
JACK503
AMP_1720003_1_6P
C761 470pF_50v
C760 470pF_50v
SPEAKER CNTR
SPK_OUT_L-
SPK_OUT_L+
CN3
ACES_87213_0200_2P
+V3S
+V5S
R480 330K_5%_OPEN
R476 10K_5%_OPEN
R475 1K_5%_OPEN
AZ_3S_RST#
Q48 SSM3K7002F_OPEN
C443 4.7uF_6.3v_OPEN
C444 0.047uF_10v_OPEN
Q521
Q520 SSM3K7002F_OPEN
SSM3K7002F_OPEN
Q523 SSM3K7002F_OPEN
Q524 SSM3K7002F_OPEN
HP_OUT_L
HP_OUT_R
HP_SENSE
C759 100uF_6.3v
C758 100uF_6.3v
R474 0_5%
R471 0_5%
R422 47K_5%_OPEN
R421 47K_5%_OPEN
R472 10K_5%_OPEN
R473 10K_5%_OPEN
R742 60.4_1%
R725 60.4_1%
L528 BLM11A121S
L525 BLM11A121S
R477 1K_5%
R481 1K_5%
JACK502
AMP_1720003_1_6P
HEADPHONE JACK
C445 470pF_50v
C450 470pF_50v
C7014 1uF_6.3v
For EMI test
MDC CNTR
CN513
TYCO_1_1775014_2_12P
MDC_3S_SDOUT
MDC_3S_SYNC
MDC_3S_SDIN1
MDC_3S_RST#
MDC_3S_BITCLK
GND
Azalia_SDO
GND
Azalia_SYNC
Azalia_SDI
Azalia_RST#
REVERSED
REVERSED
3.3Vmain-aux
GND
GND
Azalia_BCLK
20 MIL
C452 0.1uF_16v
C1041 10uF_6.3v
INVENTEC
TITLE DDD-Discrete
MDC CNTR
SIZE A3
CODE CS
DOC. NUMBER 1310A21516
REV A01
SHEET 42 OF 53
CHANGE by Drawer_Name
14-Jun-2007

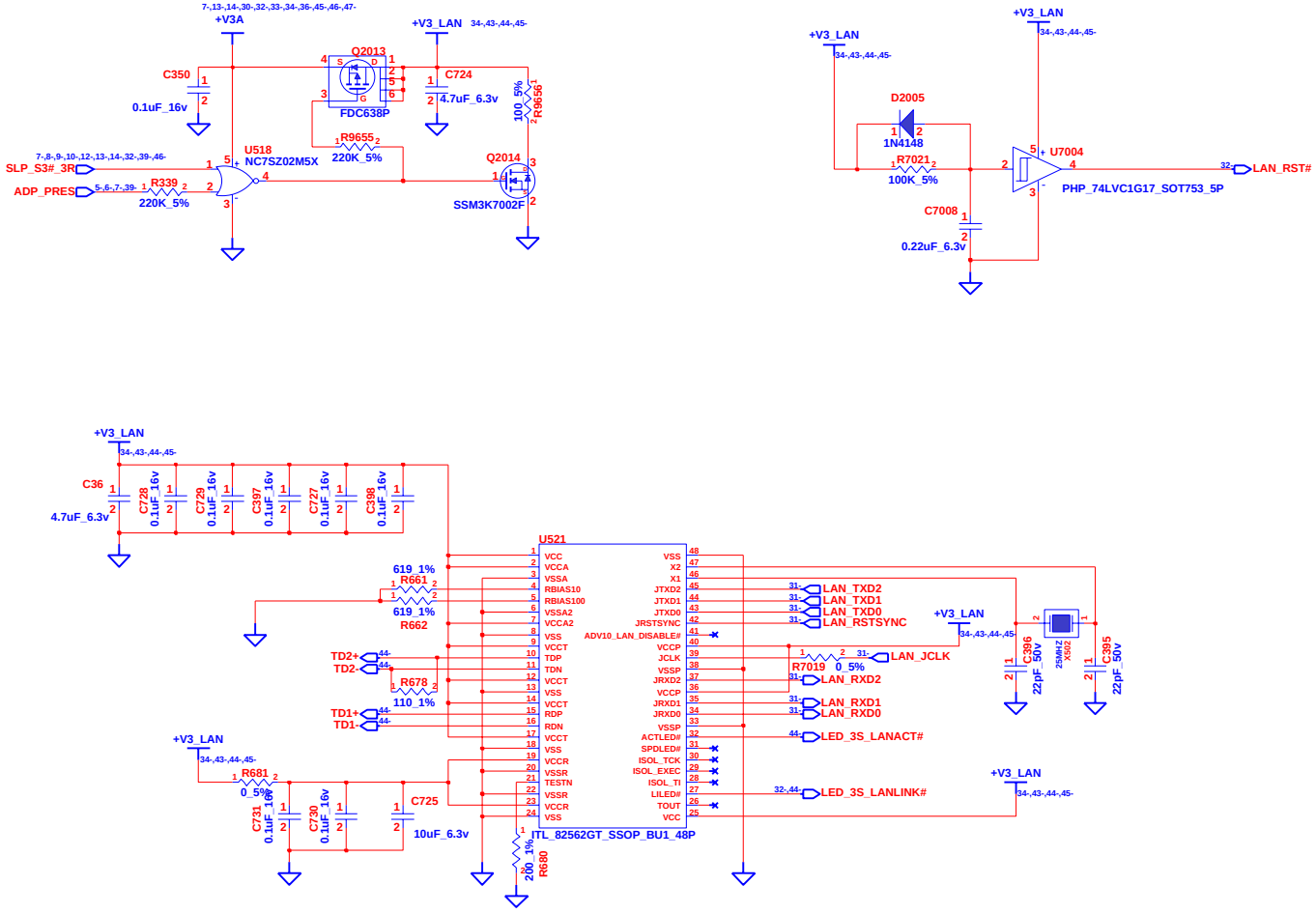

INVENTEC

TITLE **DDD-Discrete**
NIC 10/100- CONTROLLER

SIZE	CODE	DOC. NUMBER	REV
A3	CS	1310A21516	A01

CHANGE by *Drawer_Name* *14-Jun-2007*

SHEET 43 OF 53

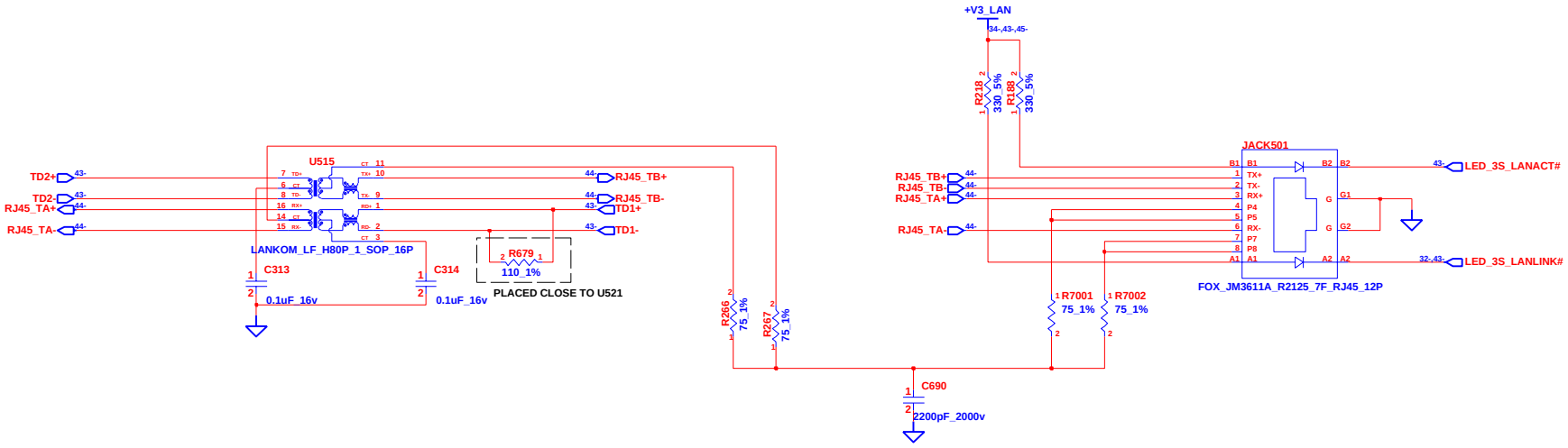

INVENTEC

TITLE DDD-Discrete
NIC 10/100- RJ45

SIZE	CODE	DOC. NUMBER	REV
A3	CS	1310A21516	A01

CHANGE by Drawer_Name 14-Jun-2007

SHEET 44 OF 53

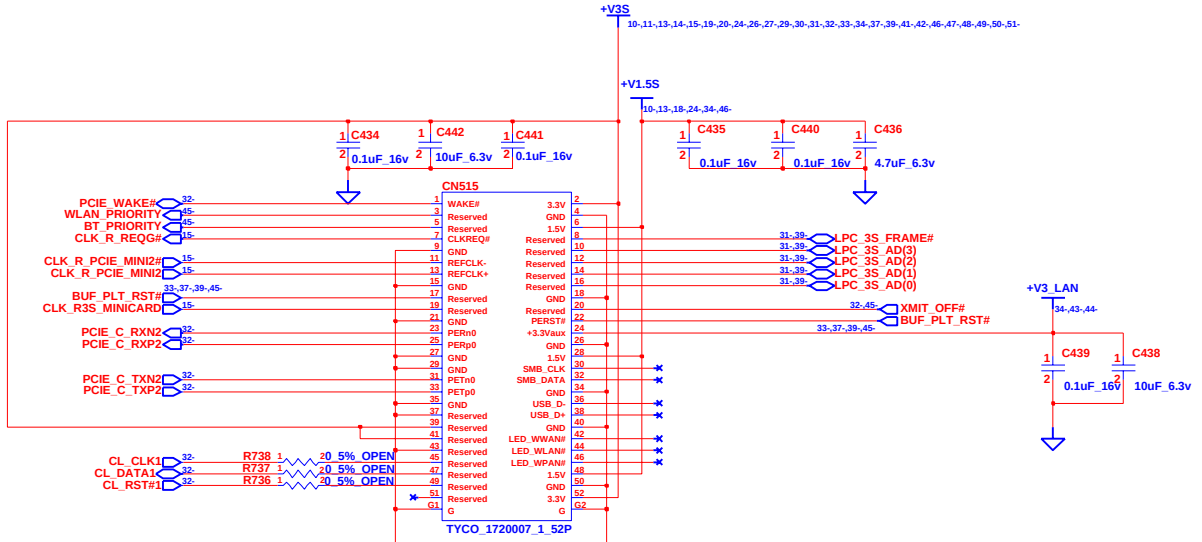

WLAN CONN

R261,R262,R263,R264,R265 place as close to LPC signal as possible to minimize stub length for LPC bus (will be NI for FCS)

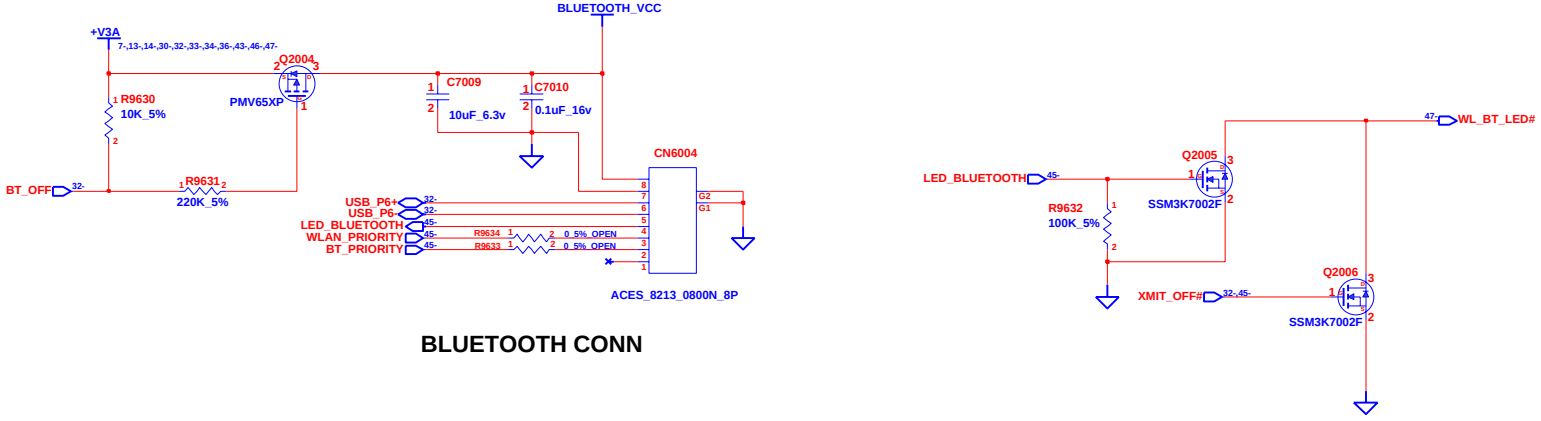

BLUETOOTH CONN

CHANGE by	Drawer_Name	14-Jun-2007	

INVENTEC

TITLE: *DDD-Discrete*
MINICARD CONN

SIZE	CODE	DOC. NUMBER	REV
A3	CS	1310A21516	A01

SHEET 45 OF 53

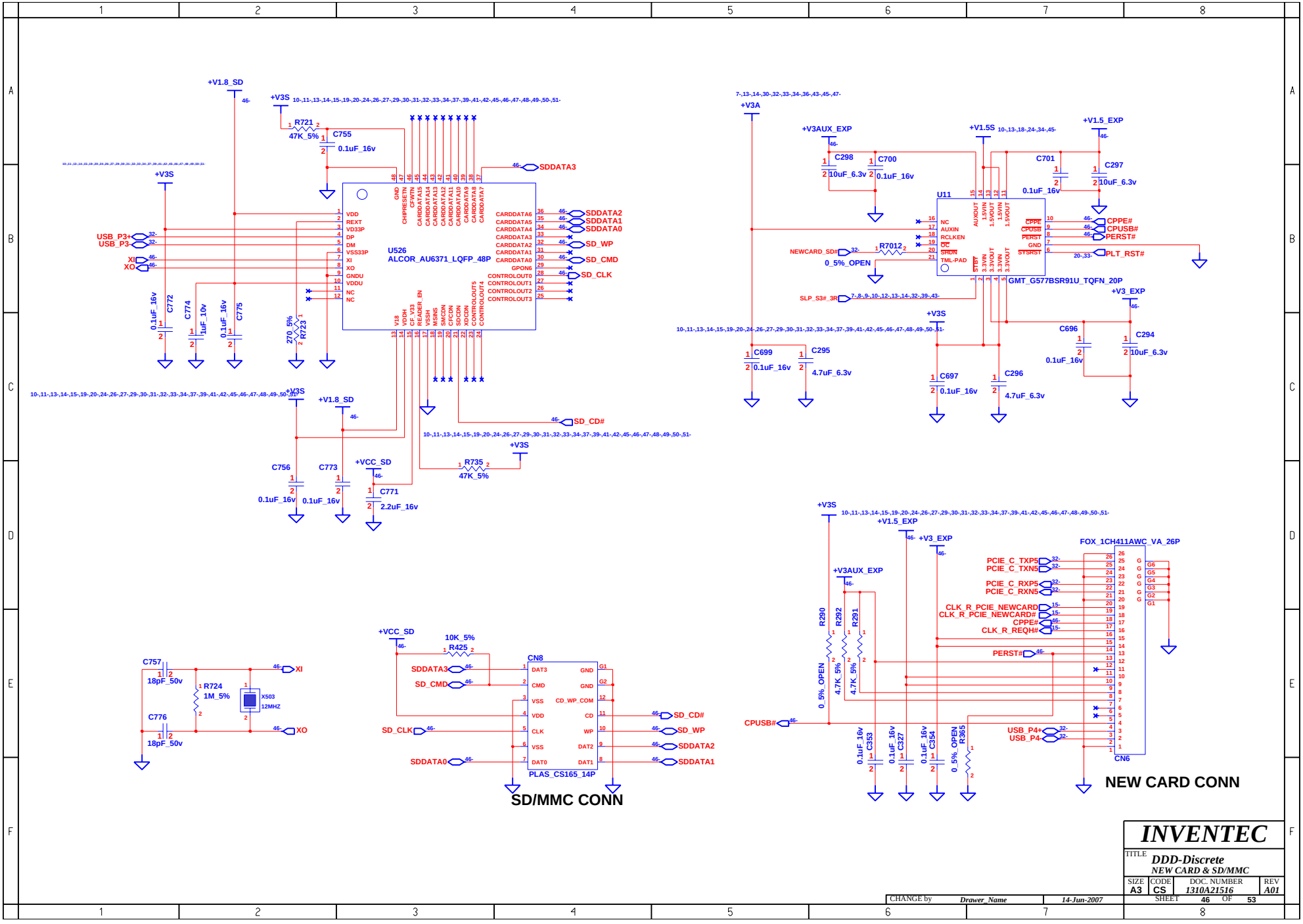
U526
ALCOR_AU6371_LQFP_48P
U11
GMT_G577BSR91U_TQFN_20P
CN8
PLAS_CS165_14P
SD/MMC CONN
FOX_1CH411AWC_VA_26P
CN6
NEW CARD CONN
X503
12MHZ
INVENTEC
TITLE
DDD-Discrete
NEW CARD & SD/MMC
SIZE A3
CODE CS
DOC. NUMBER 1310A21516
REV A01
SHEET 46 OF 53
CHANGE by Drawer_Name
14-Jun-2007

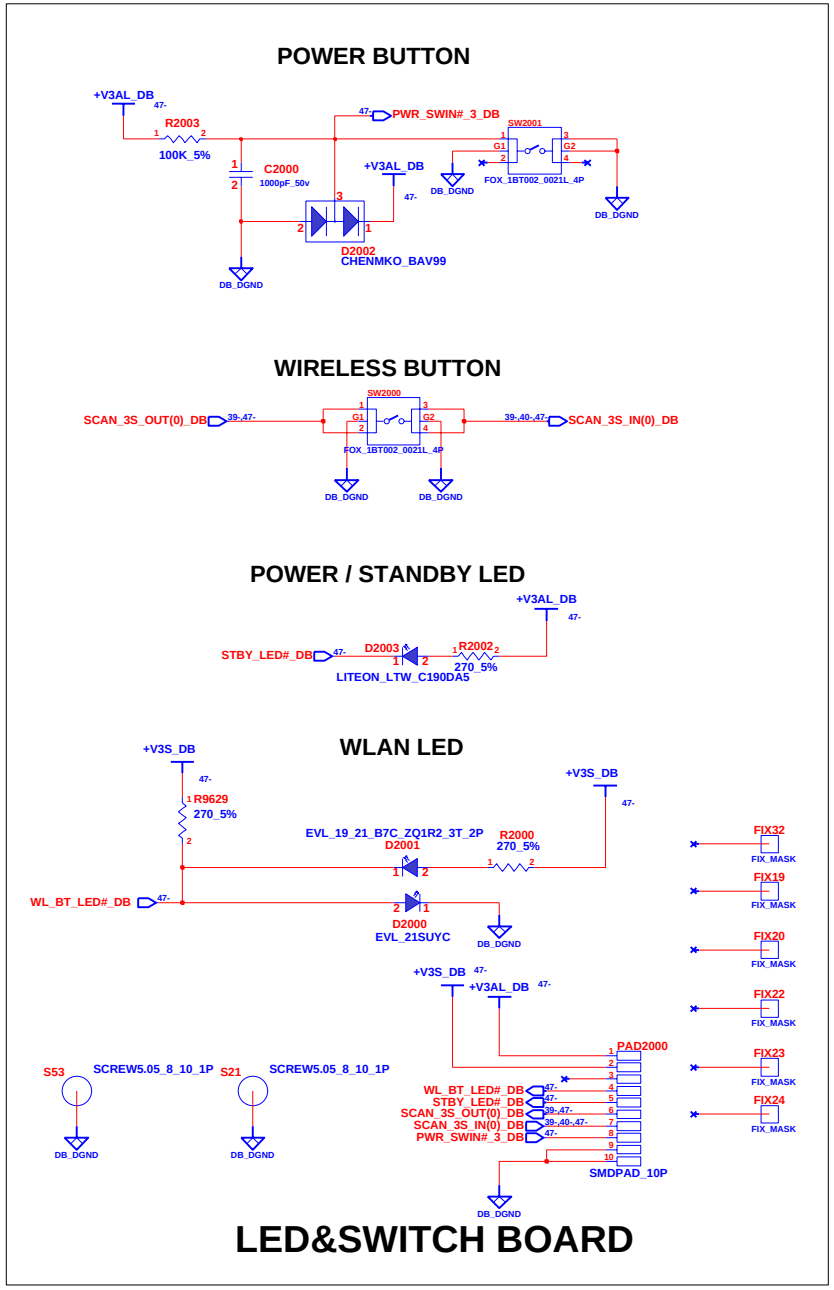

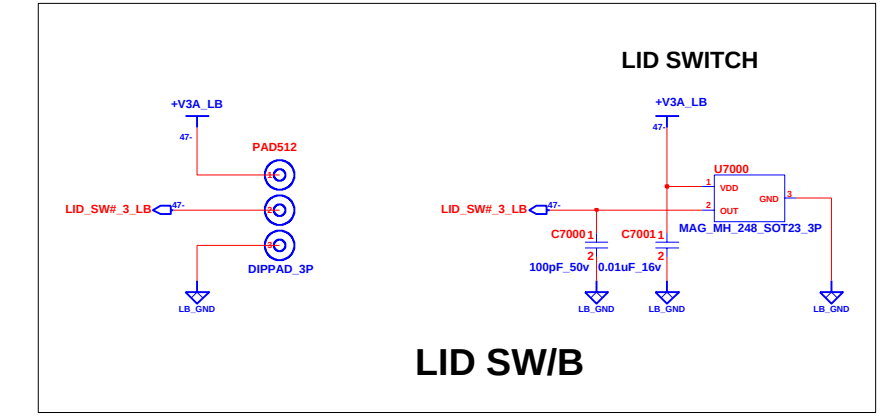

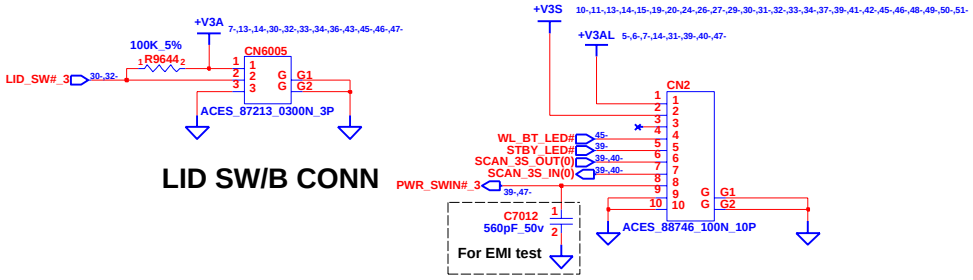

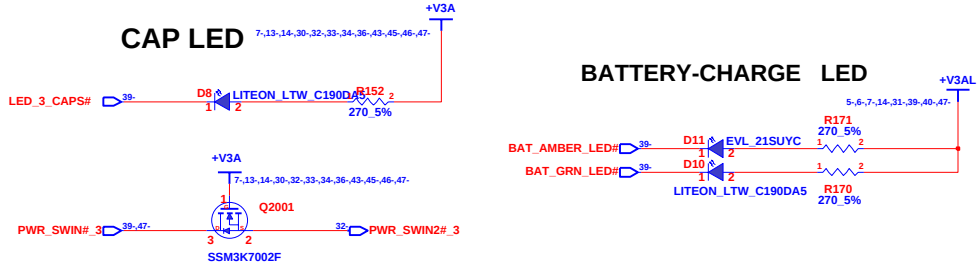

INVENTEC			
TITLE DDD-Discrete BUTTON & LED			
SIZE A3	CODE CS	DOC. NUMBER 1310A21516	REV A01
CHANGE by Drawer_Name	14-Jun-2007	SHEET 47 OF 53	

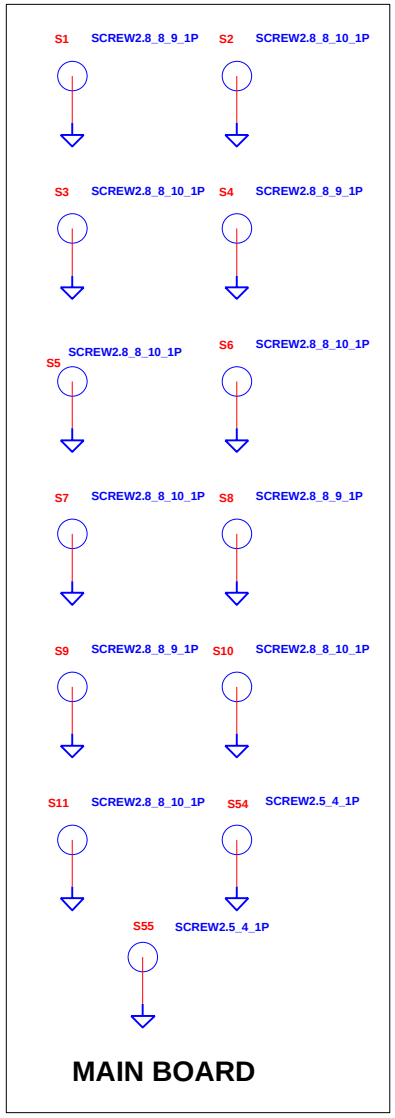

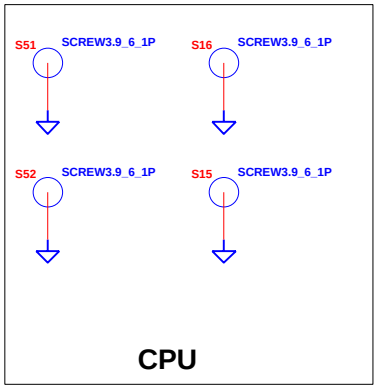

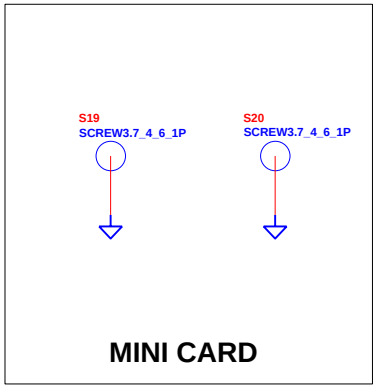

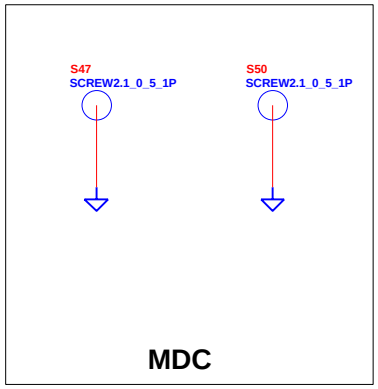

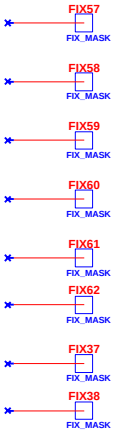

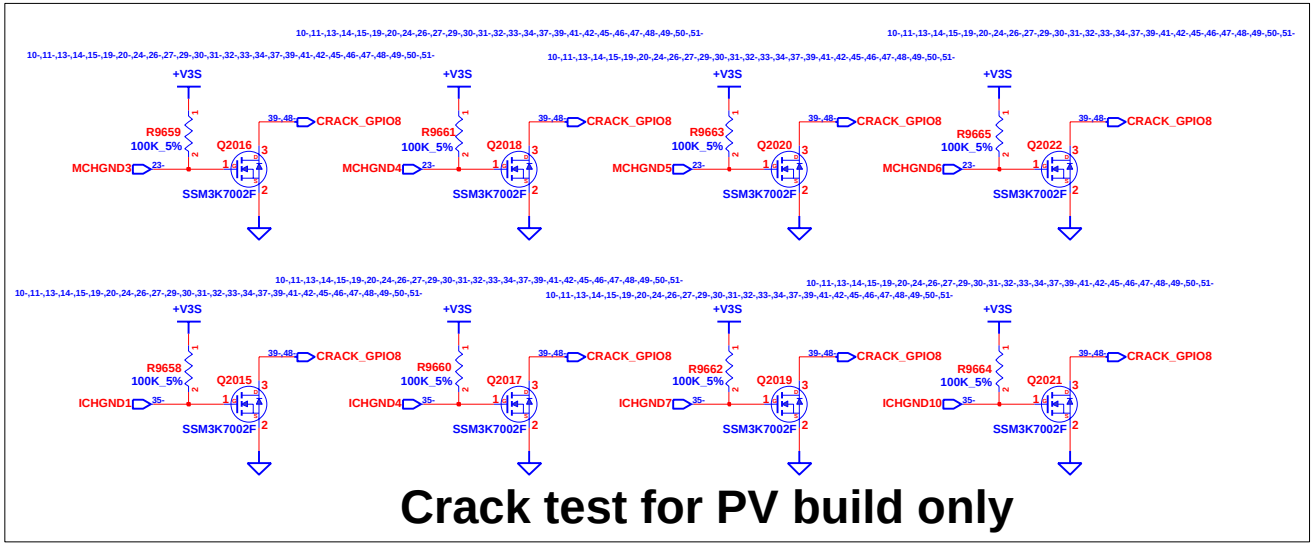

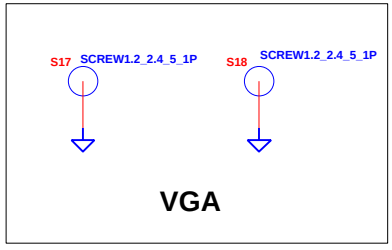

INVENTEC			
TITLE DDD-Discrete SCREW			
SIZE A3	CODE CS	DOC. NUMBER 1310A21516	REV A01
CHANGE by Drawer_Name	21-Jun-2007	SHEET 48 OF 53	

STRAPS	PIN	DESCRIPTION OF DEFAULT SETTINGS	
TX_PWRS_ENB	GPIO0	PCIE FULL TX OUTPUT SWING	X
TX_DEEMPH_EN	GPIO1	PCIE TRANSMITTER DE-EMPHASIS ENABLED	1
BIF_DEBUG_ACCESS	GPIO4	DEBUG SIGNALS MUXED OUT	0
PLL_IBIAS_RD_1	GPIO6	BIAS CURRENT FOR PCIE PHY PLL MSBIT	0
PLL_IBIAS_RD_0	GPIO5	BIAS CURRENT FOR PCIE PHY PLL LSBIT	1
ROMIDCFG(3:0)	GPIO[13:11,9]	DISABLE EXTERNAL BIOS ROM	X X X X

X = DESIGN DEPENDANT
0 = DO NOT INSTALL RESISTOR
1 = INSTALL 10K RESISTOR

GPIO_13	GPIO_12	GPIO_9	For DIS-GDDR2 & GDDR1
0	0	0	128M memory aperture (Default)
0	1	0	256M memory aperture
1	0	0	64M memory aperture
1	1	0	reserved

For DIS-GDDR2

MEM_ID3	MEM_ID2	MEM_ID1	MEM_ID0	vendor
0	0	0	0	X
0	0	0	1	samsung (128MB)
1	0	0	1	samsung (64MB)
0	0	1	0	infineon (128MB)
1	0	1	0	infineon (64MB)
0	1	0	0	hynix (128MB)
1	1	0	0	hynix (64MB)

For DIS-GDDR1

MEM_ID3	MEM_ID2	MEM_ID1	MEM_ID0	vendor
0	1	0	1	samsung (64MB-300MHz)
0	1	1	0	hynix (64MB-300MHz)
0	1	1	1	hynix (128MB-300MHz)
1	0	0	0	hynix (128MB-350MHz) (Default)

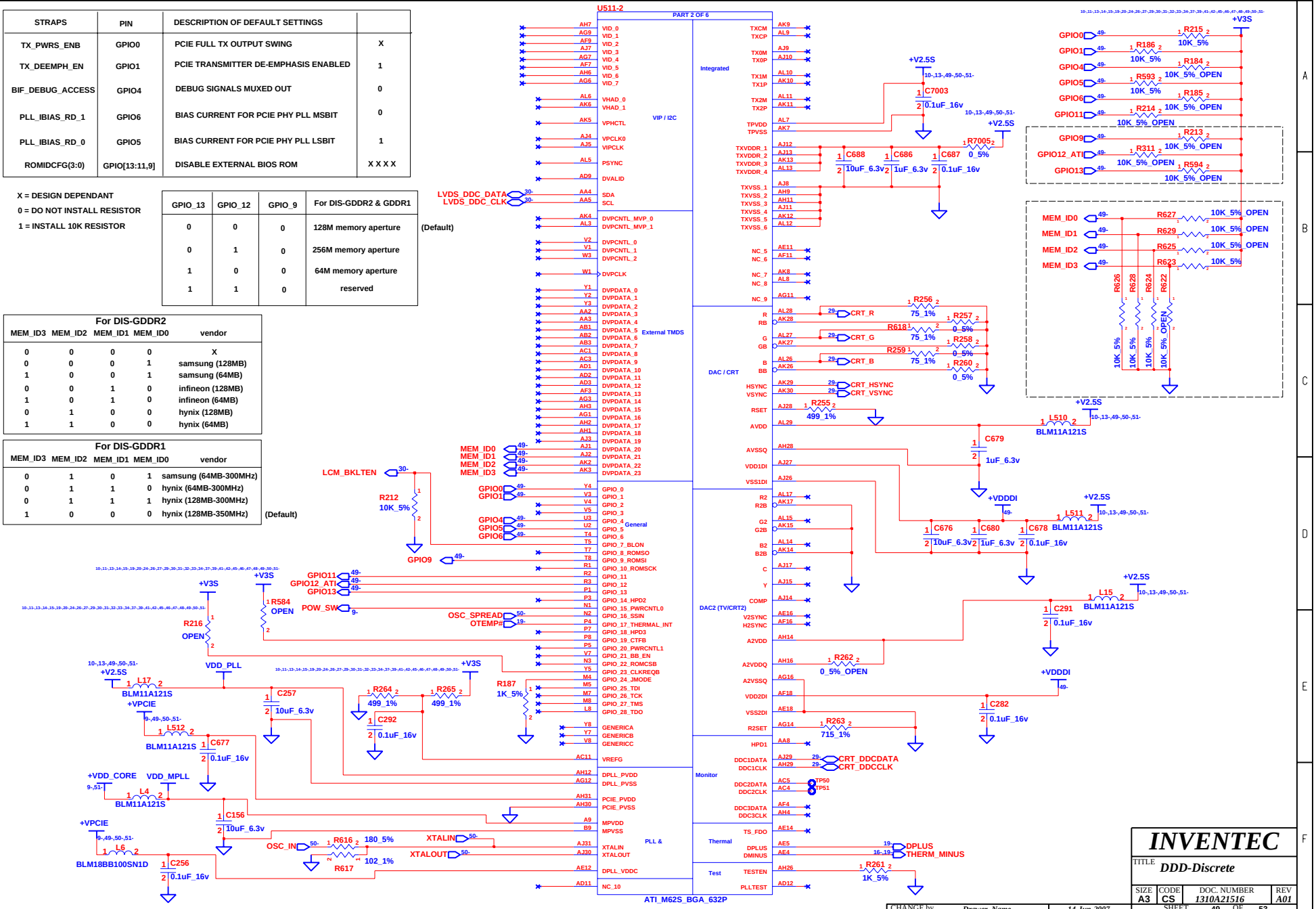

INVENTEC

TITLE **DDD-Discrete**

SIZE	CODE	DOC. NUMBER	REV
A3	CS	1310A21516	A01

SHEET 49 OF 53

CHANGE by Drawer_Name 14-Jun-2007

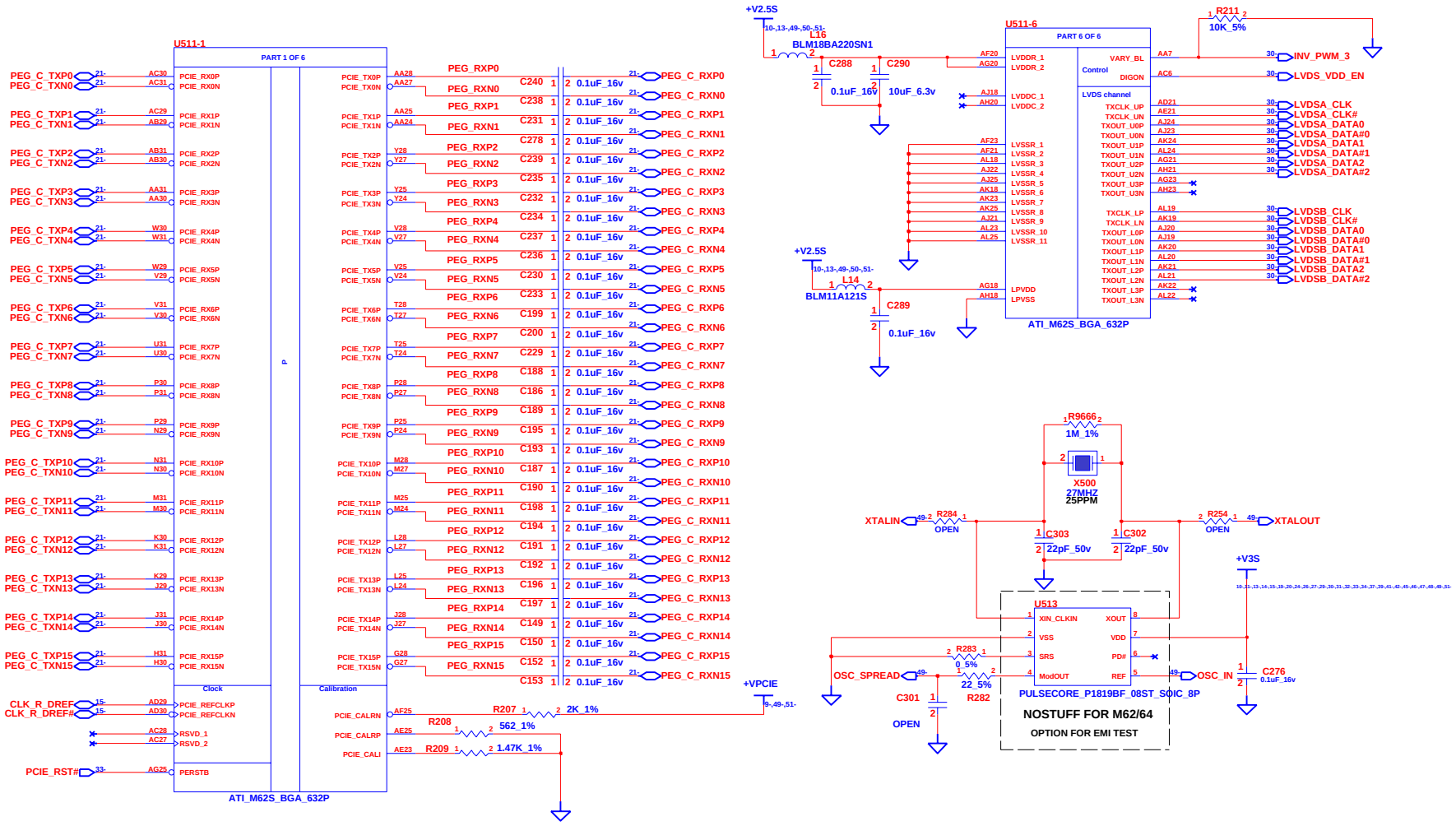

INVENTEC

TITLE DDD-Discrete

SIZE	CODE	DOC. NUMBER	REV
A3	CS	1310A21516	A01

SHEET 50 OF 53

CHANGE by Drawer_Name 14-Jun-2007

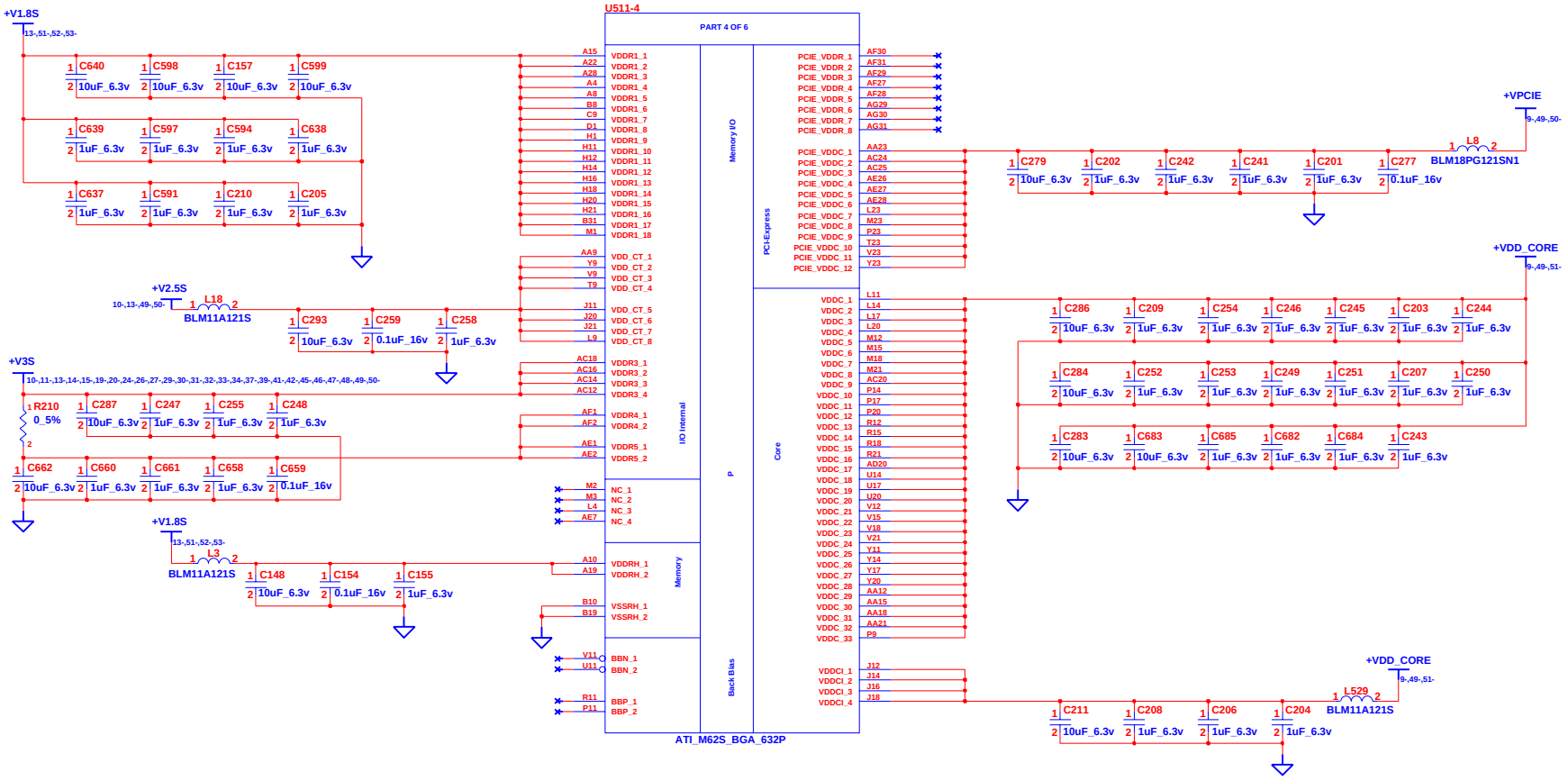

CHANGE by	Drawer_Name	14-Jun-2007	

INVENTEC

TITLE **DDD-Discrete**

SIZE	CODE	DOC. NUMBER	REV
A3	CS	1310A21516	A01

SHEET 51 OF 53

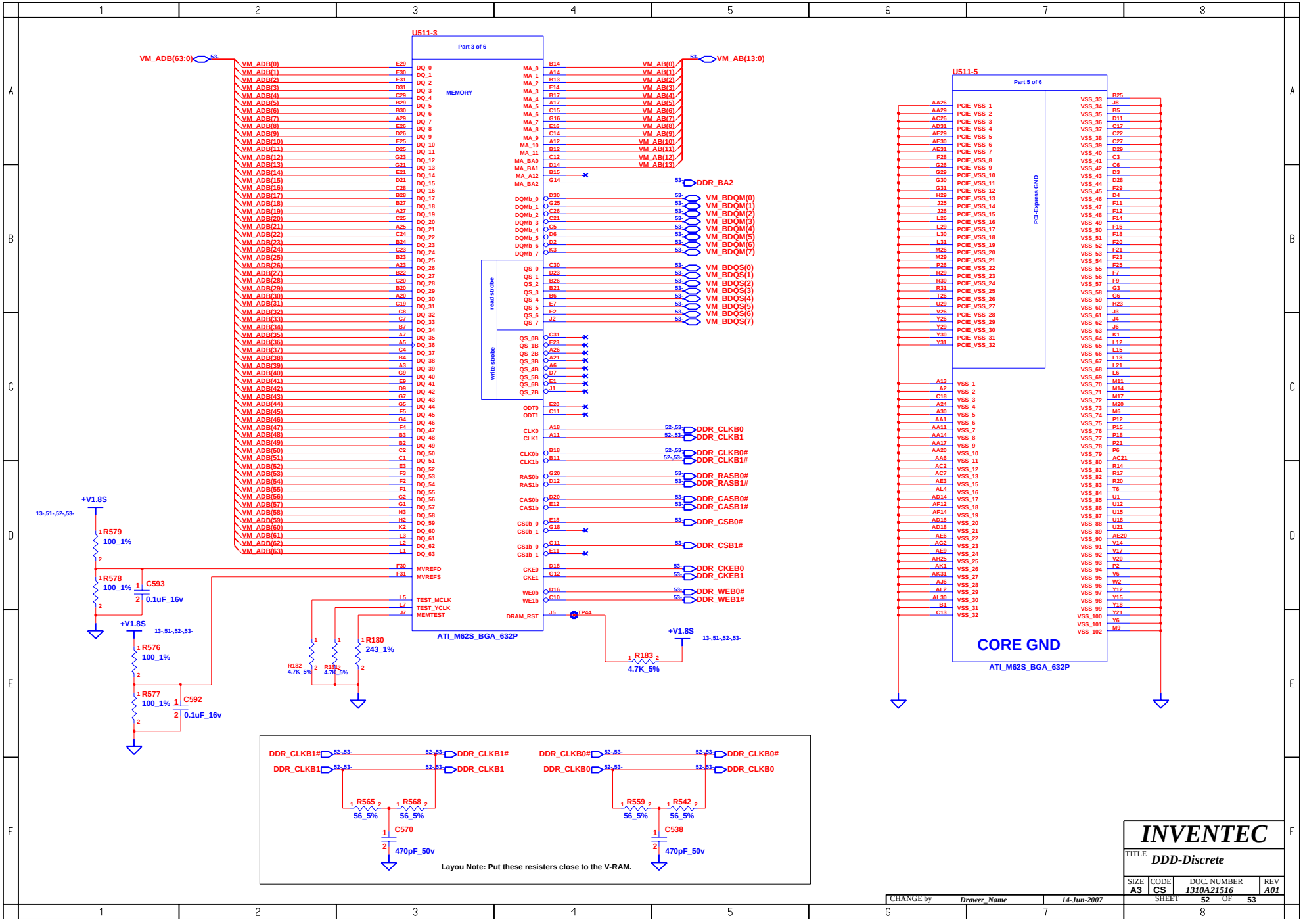

INVENTEC

TITLE DDD-Discrete

SIZE	CODE	DOC. NUMBER	REV
A3	CS	1310A21516	A01

SHEET 52 OF 53

CHANGE by Drawer_Name 14-Jun-2007

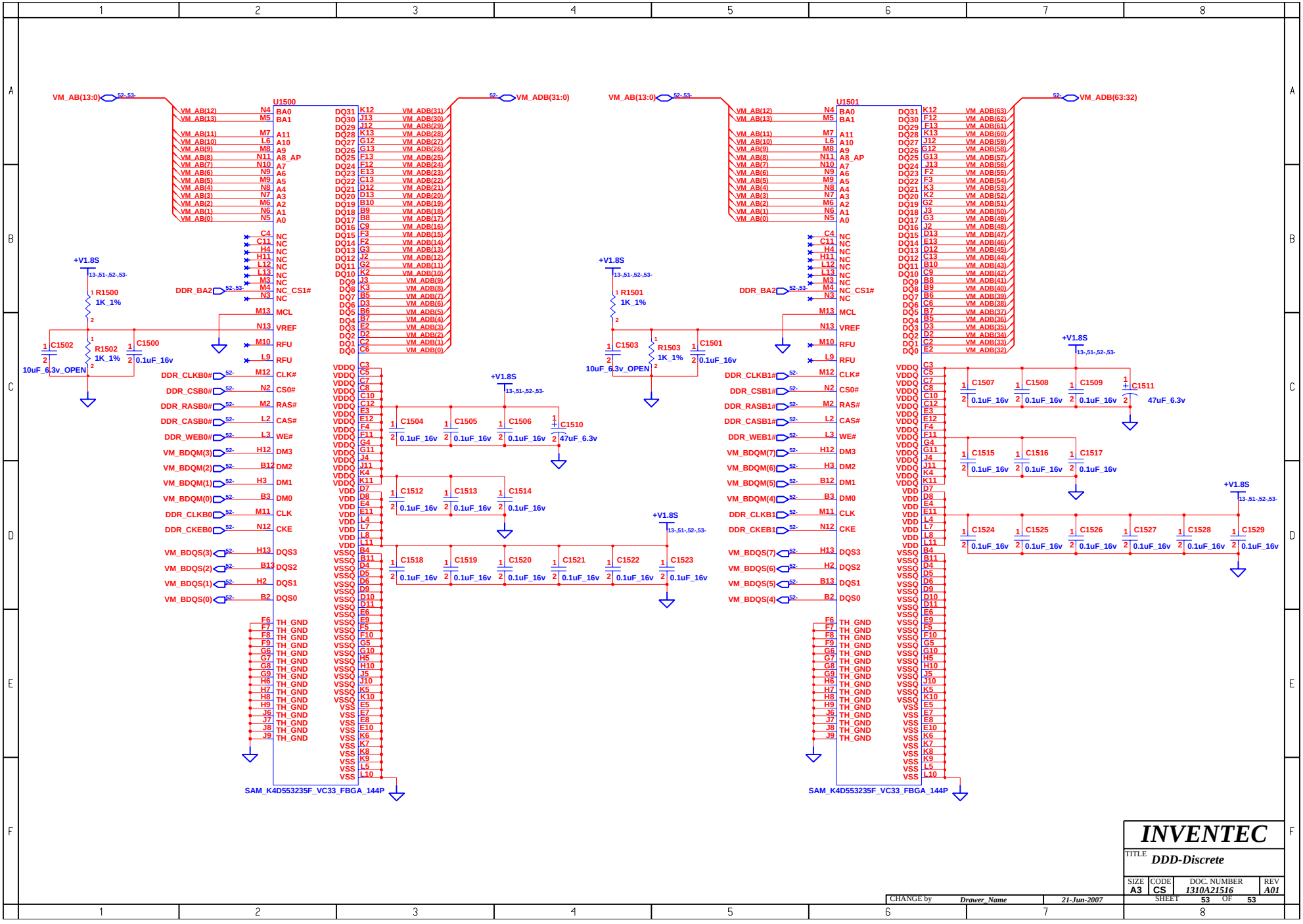

INVENTEC			
TITLE DDD-Discrete			
SIZE A3	CODE CS	DOC. NUMBER 1310A21516	REV A01
CHANGE by Drawer_Name	21-Jun-2007	SHEET 53 OF 53	