DAVOS-DF

PV-1-BUILD

2004.11.04

DATE	CHANGE NO.	REV

	EE	DATE	POWER	DATE
DRAWER				
DESIGN				
CHECK				
RESPONSIBLE				

SIZE = 3 VER :

FILE NAME : XXXX-XXXXXX-XX

P/N XXXXXXXXXXXX

INVENTEC

TITLE *DAVOS-DF*

SIZE	CODE	DOC. NUMBER	REV
A3	CS	*PC9603*	*A01*

SHEET 1 OF 65

TABLE OF CONTENTS

PAGE
5- DC& BATTERY CHARGER
6- SELECT & BATTERY CONN
7- SYSTEM POWER(3V/5V)
8- D/B SYSTEM POWER(+VCCP)
9- SYSTEM POWER(+V2.5/+V1.5A)
10- D/B SYSTEM POWER(+V1.25S)
11- CPU POWER(VCC_CORE)
12- BLANK
13- POWER(SLEEP)
14- POWER(SEQUENCE)
15- CLOCK_GENERATOR
16- DOTHAN-1
17- DOTHAN-2
18- DOTHAN-3
19- DOTHAN-4
20- THERMAL&FAN CONTROLLER
21- ALVISO-1
22- ALVISO-2
23- ALVISO-3
24- ALVISO-4
25- ALVISO-5
26- DDR-DIMM0

PAGE
27- DDR-DIMM1
28- DDR-DAMPING RESISTORS
29- DDR-TERMINAL RESISTORS
30- CRT& MINI DIN
31- LCD CONN
32- ICH6-1
33- ICH6-2
34- ICH6-3
35- ICH6-4
36- ICH6-5
37- KBC
38- FWH
39- INT. KB CONN & TOUCHPAD
40- SUPER I/O
41- SERIAL PORT & IR
42- PARALLEL PORT
43- AC97 CODEC
44- EQ, MIC & HP JACK
45- AUDIO AMP
46- HDD CONN
47- OPTICAL DRIVE CONN
48- USB CONN

PAGE
49- CARDBUS CONTROLL
50- 6 IN 1 SLOT DAUGHTOR BOARD
51- 1394 JACK
52- PC CARD SLOT
53- MINIPCI CONN
54- 10/100/1000 NIC
55- BLANK
56- NIC-TRANSFORMER
57- DOCKING CONN
58-MDC CONN
59- BLUETOOTH CONN
60- LEDS
61- SWITCH & BUTTON
62- SCREW
63- BUTTON & LED DAUGHTER BOARD
64- CABLES
65- CHANGE LIST

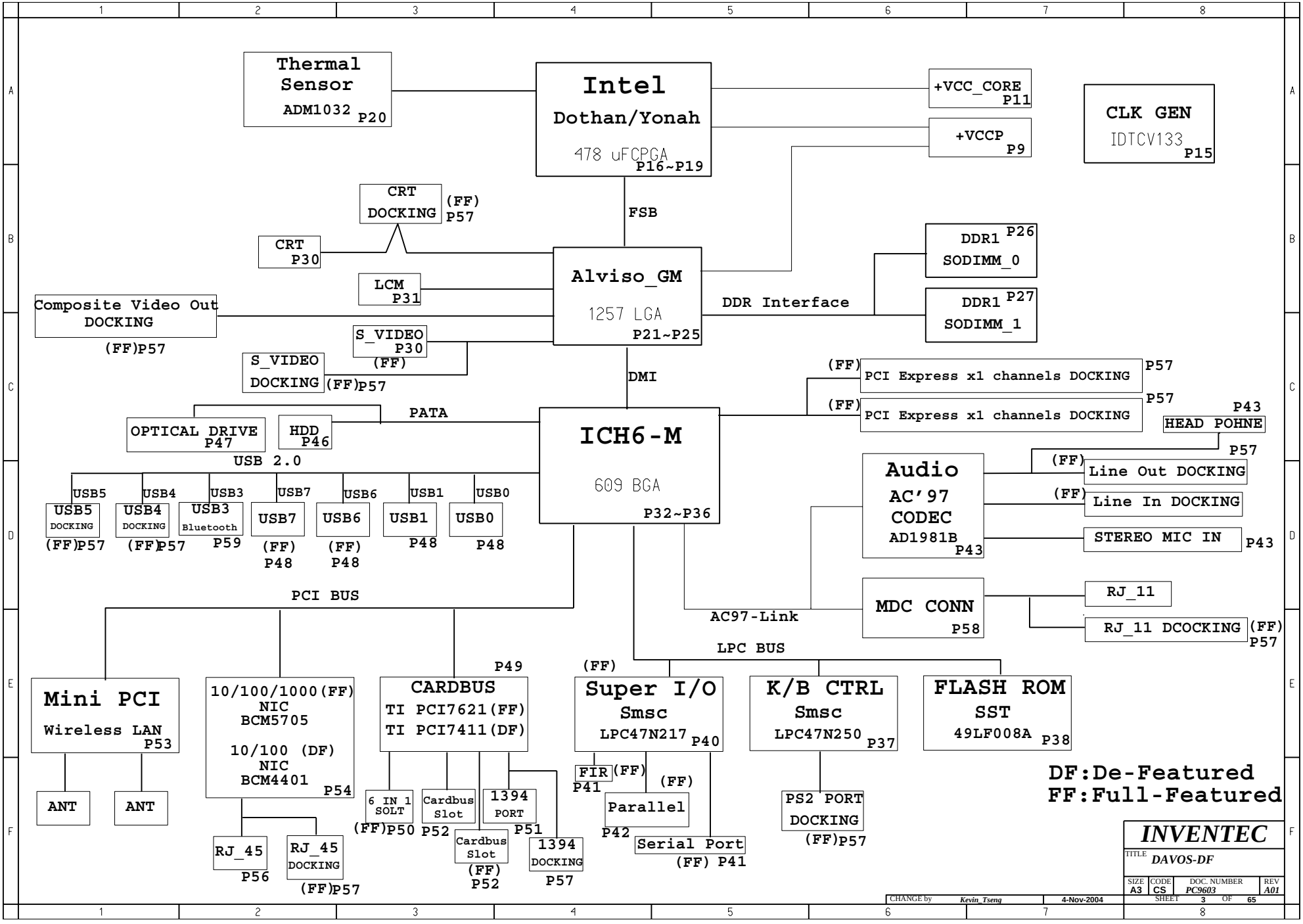
Thermal Sensor
ADM1032 P20
Intel
Dothan/Yonah
478 uFCPGA
P16~P19
+VCC_CORE P11
+VCCP P9
CLK GEN
IDTCV133 P15
CRT DOCKING (FF) P57
CRT P30
FSB
Alviso_GM
1257 LGA
P21~P25
LCM P31
Composite Video Out DOCKING
(FF)P57
S_VIDEO P30 (FF)
S_VIDEO DOCKING (FF)P57
DDR1 P26 SODIMM_0
DDR1 P27 SODIMM_1
DDR Interface
DMI
(FF) PCI Express x1 channels DOCKING P57
(FF) PCI Express x1 channels DOCKING P57
P43 HEAD POHNE
PATA
OPTICAL DRIVE P47
HDD P46
USB 2.0
ICH6-M
609 BGA
P32~P36
Audio
AC'97 CODEC
AD1981B P43
(FF) Line Out DOCKING P57
(FF) Line In DOCKING
STEREO MIC IN P43
USB5 USB4 USB3 USB7 USB6 USB1 USB0
USB5 DOCKING (FF)P57
USB4 DOCKING (FF)P57
USB3 Bluetooth P59
USB7 (FF) P48
USB6 (FF) P48
USB1 P48
USB0 P48
PCI BUS
AC97-Link
MDC CONN P58
RJ_11
RJ_11 DCOCKING (FF) P57
LPC BUS
Mini PCI
Wireless LAN P53
ANT
ANT
10/100/1000(FF) NIC BCM5705
10/100 (DF) NIC BCM4401 P54
RJ_45 P56
RJ_45 DOCKING (FF)P57
P49
CARDBUS
TI PCI7621(FF)
TI PCI7411(DF)
6_IN_1 SOLT (FF)P50
Cardbus Slot P52
1394 PORT P51
Cardbus Slot (FF) P52
1394 DOCKING P57
(FF)
Super I/O
Smsc
LPC47N217 P40
FIR (FF) P41
(FF)
Parallel P42
Serial Port (FF) P41
K/B CTRL
Smsc
LPC47N250 P37
PS2 PORT DOCKING (FF)P57
FLASH ROM
SST
49LF008A P38
DF:De-Featured
FF:Full-Featured
INVENTEC
TITLE DAVOS-DF
SIZE A3 CODE CS DOC. NUMBER PC9603 REV A01
SHEET 3 OF 65
CHANGE by Kevin_Tseng 4-Nov-2004

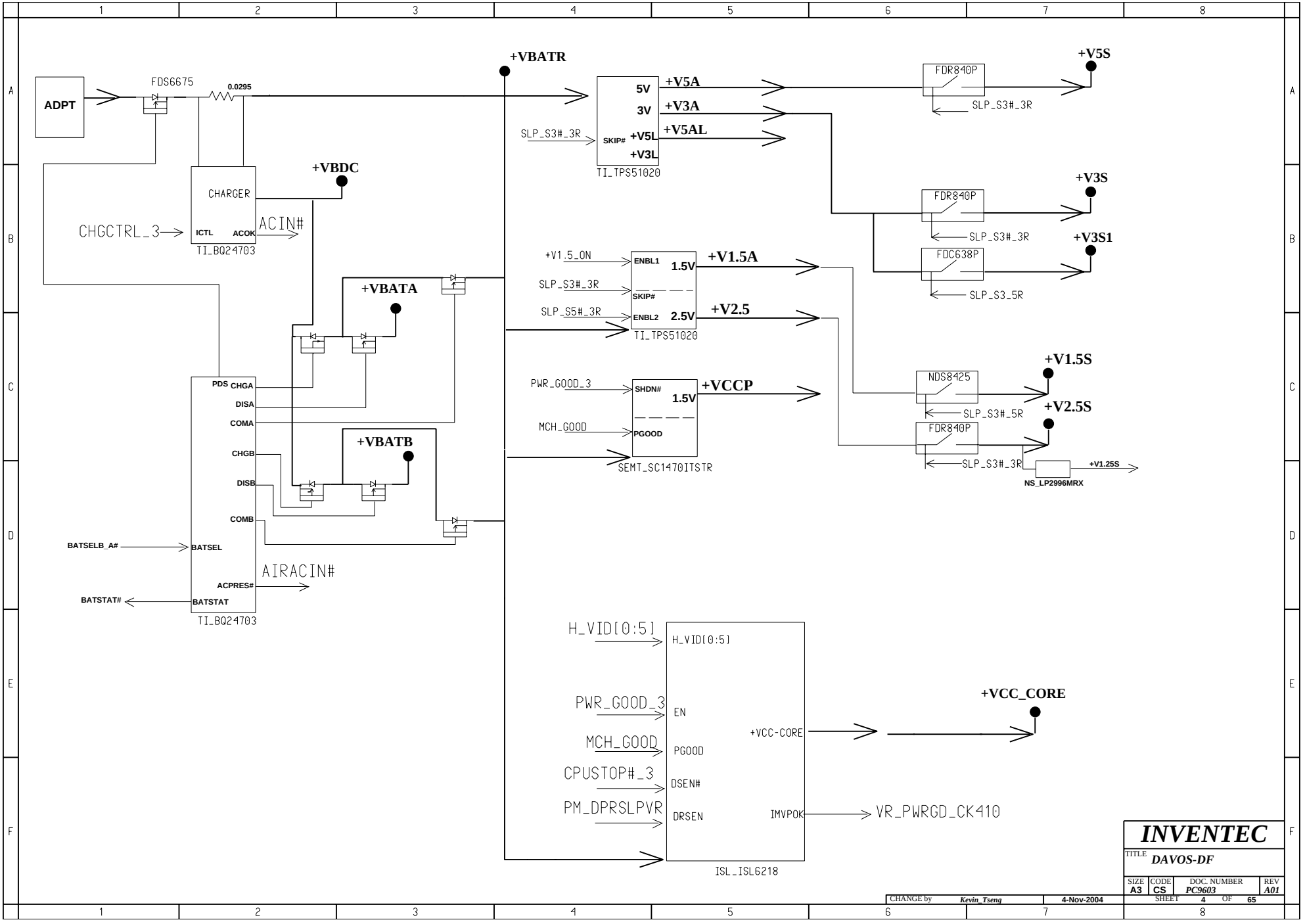

INVENTEC			
TITLE DAVOS-DF			
SIZE A3	CODE CS	DOC. NUMBER PC9603	REV A01
CHANGE by Kevin_Tseng	4-Nov-2004	SHEET 4 OF 65	

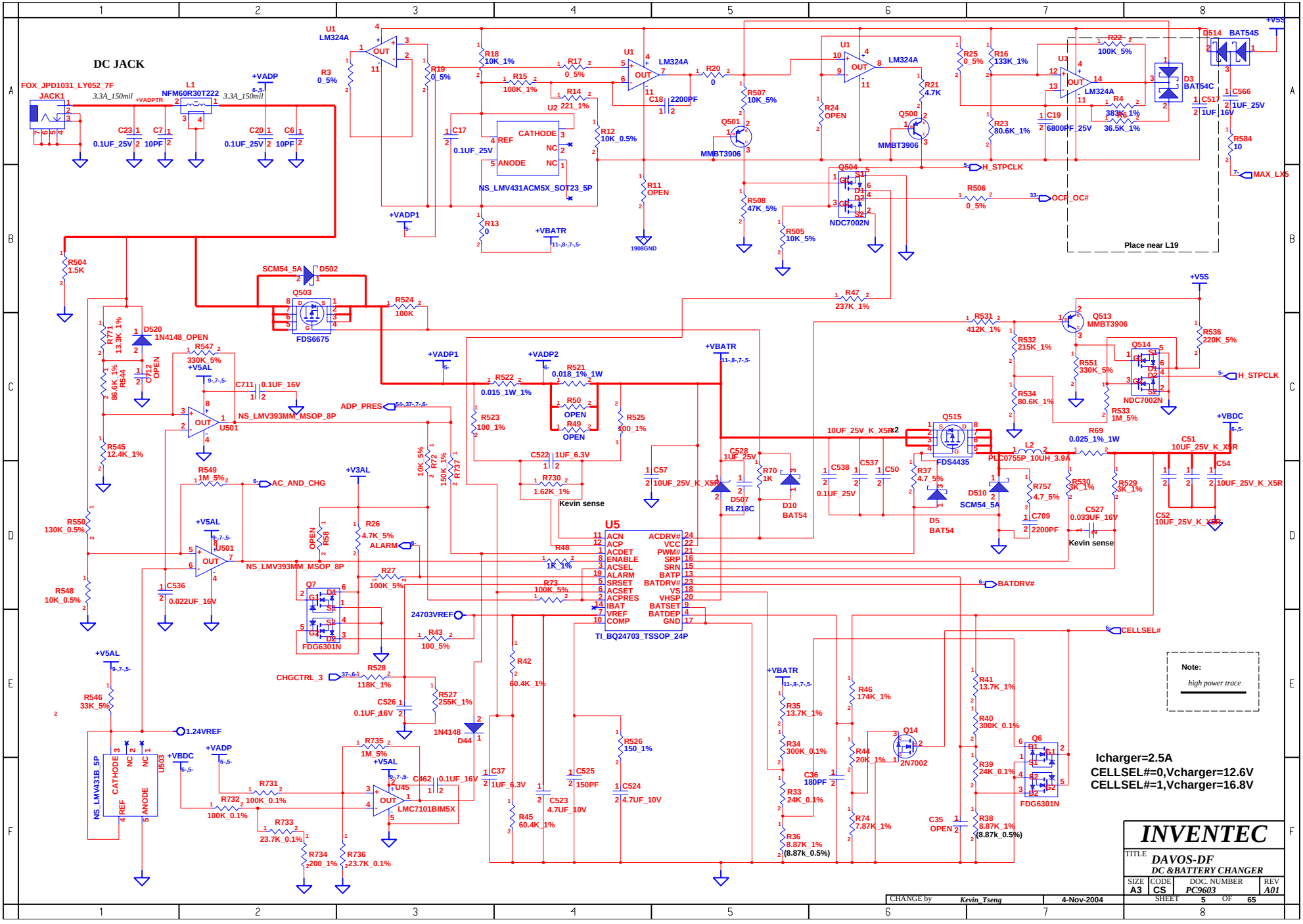
DC JACK
JACK1
FOX_JPD1031_LY052_7F
3.3A_150mil
NFM60R30T222
L1
+VADPTR
+VADP
C23 0.1UF_25V
C7 10PF
C20 0.1UF_25V
C6 10PF
U1 LM324A
R3 0_5%
R19 0_5%
R18 10K_1%
R15 100K_1%
R17 0_5%
R14 221_1%
U2
NS_LMV431ACM5X_SOT23_5P
CATHODE
REF
ANODE
NC
C17 0.1UF_25V
R12 10K_0.5%
R13 0
+VADP1
+VBATR
R20 0
C18 2200PF
R11 OPEN
1908GND
R507 10K_5%
Q501 MMBT3906
R508 47K_5%
R505 10K_5%
R21 4.7K
R24 OPEN
Q500 MMBT3906
Q504 NDC7002N
R506 0_5%
OCP_OC#
H_STPCLK
R25 0_5%
R16 133K_1%
R23 80.6K_1%
C19 6800PF_25V
R22 100K_5%
R4 383K_1%
36.5K_1%
D3 BAT54C
D514 BAT54S
+V5S
C517 1UF_16V
C566 1UF_25V
R584 10
MAX_LX5
Place near L19
R504 1.5K
SCM54_5A D502
Q503 FDS6675
R524 100K
R47 237K_1%
R771 13.3K_1%
D520 1N4148_OPEN
R544 86.6K_1%
C712 OPEN
R547 330K_5%
+V5AL
C711 0.1UF_16V
NS_LMV393MM_MSOP_8P
U501
ADP_PRES
+VADP2
R521 0.018_1%_1W
R522 0.015_1W_1W
R50 OPEN
R49 OPEN
R523 100_1%
R525 100_1%
R531 412K_1%
R532 215K_1%
R534 80.6K_1%
Q513 MMBT3906
Q514 NDC7002N
R551 330K_5%
R533 1M_5%
R536 220K_5%
H_STPCLK
+VDBC
R69 0.025_1%_1W
C51 10UF_25V_K_X5R
L2 PLC0755P_10UH_3.9A
C54 10UF_25V_K_X5R
C52 10UF_25V_K_X5R
Q515 FDS4435
10UF_25V_K_X5R x2
C538 0.1UF_25V
C537
C50
R37 4.7_5%
D5 BAT54
D510 SCM54_5A
R757 4.7_5%
C709 2200PF
R530 3K_1%
R529 3K_1%
C527 0.033UF_16V
Kevin sense
C528 1UF_25V
D507 RLZ18C
R70 1K
D10 BAT54
C522 1UF_6.3V
R730 1.62K_1%
Kevin sense
C57 10UF_25V_K_X5R
R545 12.4K_1%
R549 1M_5%
AC_AND_CHG
+V3AL
R550 130K_0.5%
R548 10K_0.5%
C536 0.022UF_16V
R26 4.7K_5%
ALARM
R58 OPEN
R48 1K_1%
R27 100K_5%
R73 100K_5%
Q7 FDG6301N
24703VREF
R43 100_5%
U5
TI_BQ24703_TSSOP_24P
ACN
ACP
ACDET
ENABLE
ACSEL
ALARM
SRSET
ACSET
ACPRES
IBAT
VREF
COMP
ACDRV#
VCC
PWM#
SRP
SRN
BATP
BATDRV#
VS
VHSP
BATSET
BATDEP
GND
BATDRV#
CELLSEL#
R546 33K_5%
1.24VREF
NS_LMV431B_5P
U503
+VBDC
+VADP
R731 100K_0.1%
R732 100K_0.1%
R733 23.7K_0.1%
R734 200_1%
R736 23.7K_0.1%
R735 1M_5%
C462 0.1UF_16V
U45 LMC7101BIM5X
CHGCTRL_3
R528 118K_1%
R527 255K_1%
C526 0.1UF_16V
1N4148 D44
R42 60.4K_1%
C37 1UF_6.3V
R45 60.4K_1%
C523 4.7UF_10V
C525 150PF
R526 150_1%
C524 4.7UF_10V
R35 13.7K_1%
R34 300K_0.1%
R33 24K_0.1%
R36 8.87K_1% (8.87K_0.5%)
C36 180PF
R46 174K_1%
R44 20K_1%
Q14 2N7002
R74 7.87K_1%
C35 OPEN
R41 13.7K_1%
R40 300K_0.1%
R39 24K_0.1%
R38 8.87K_1% (8.87K_0.5%)
Q6 FDG6301N
Note:
high power trace
Icharger=2.5A
CELLSEL#=0,Vcharger=12.6V
CELLSEL#=1,Vcharger=16.8V
INVENTEC
TITLE DAVOS-DF
DC &BATTERY CHANGER
SIZE A3
CODE CS
DOC. NUMBER PC9603
REV A01
SHEET 5 OF 65
CHANGE by Kevin_Tseng
4-Nov-2004

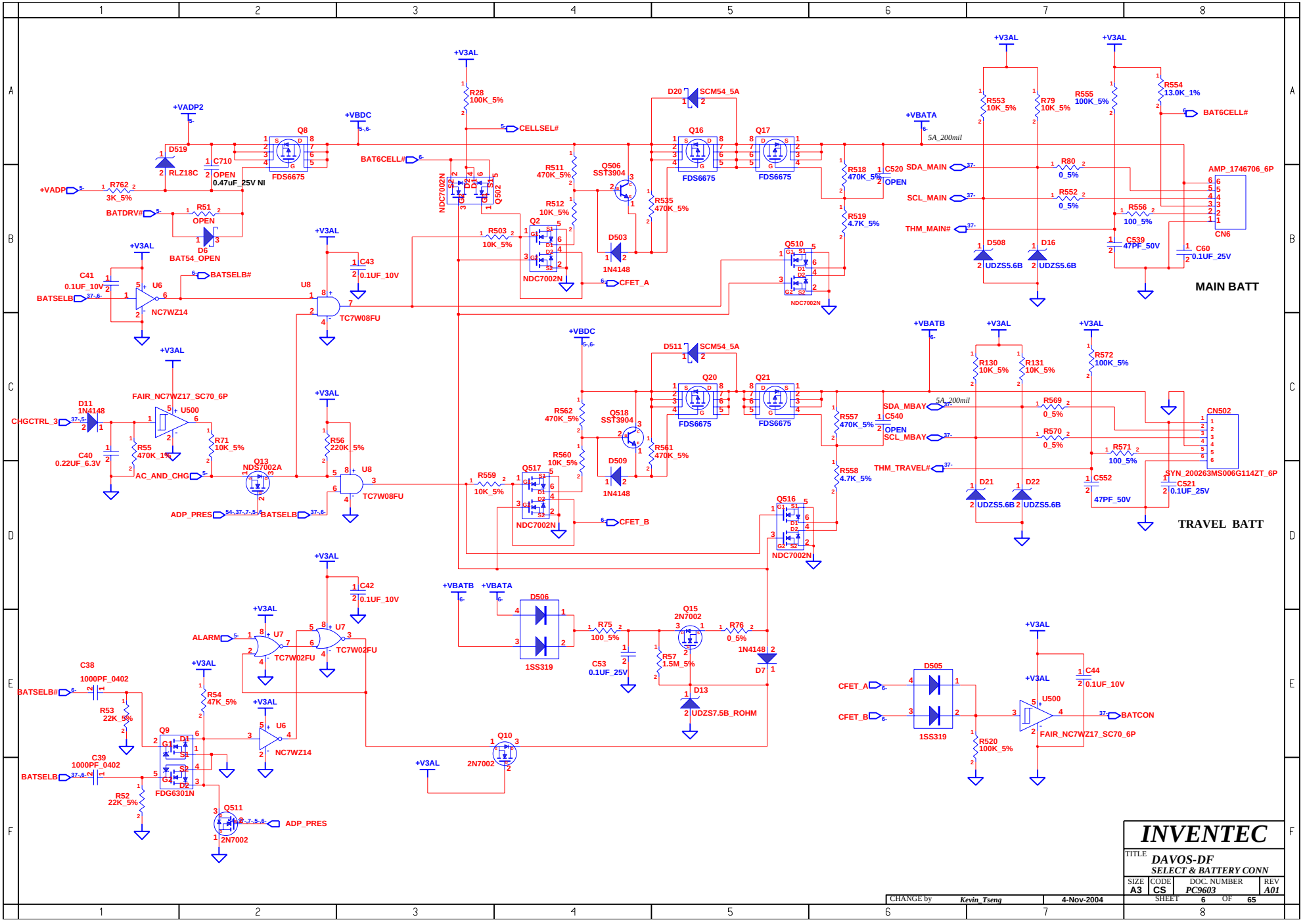
MAIN BATT
TRAVEL BATT
INVENTEC
TITLE
DAVOS-DF
SELECT & BATTERY CONN
SIZE A3
CODE CS
DOC. NUMBER PC9603
REV A01
SHEET 6 OF 65
CHANGE by Kevin_Tseng
4-Nov-2004
+V3AL
+VADP2
+VBDC
+VBATA
+VBATB
+VADP
BAT6CELL#
CELLSEL#
BATDRV#
BATSELB#
BATSELB
CHGCTRL_3
AC_AND_CHG
ADP_PRES
ALARM
CFET_A
CFET_B
BATCON
SDA_MAIN
SCL_MAIN
THM_MAIN#
SDA_MBAY
SCL_MBAY
THM_TRAVEL#
AMP_1746706_6P
CN6
CN502
SYN_200263MS006G114ZT_6P
FAIR_NC7WZ17_SC70_6P
NC7WZ14
TC7W08FU
TC7W02FU
FDS6675
NDC7002N
FDG6301N
NDS7002A
2N7002
1SS319
UDZS5.6B
UDZS7.5B_ROHM
RLZ18C
SCM54_5A
SST3904
1N4148
BAT54_OPEN
5A_200mil

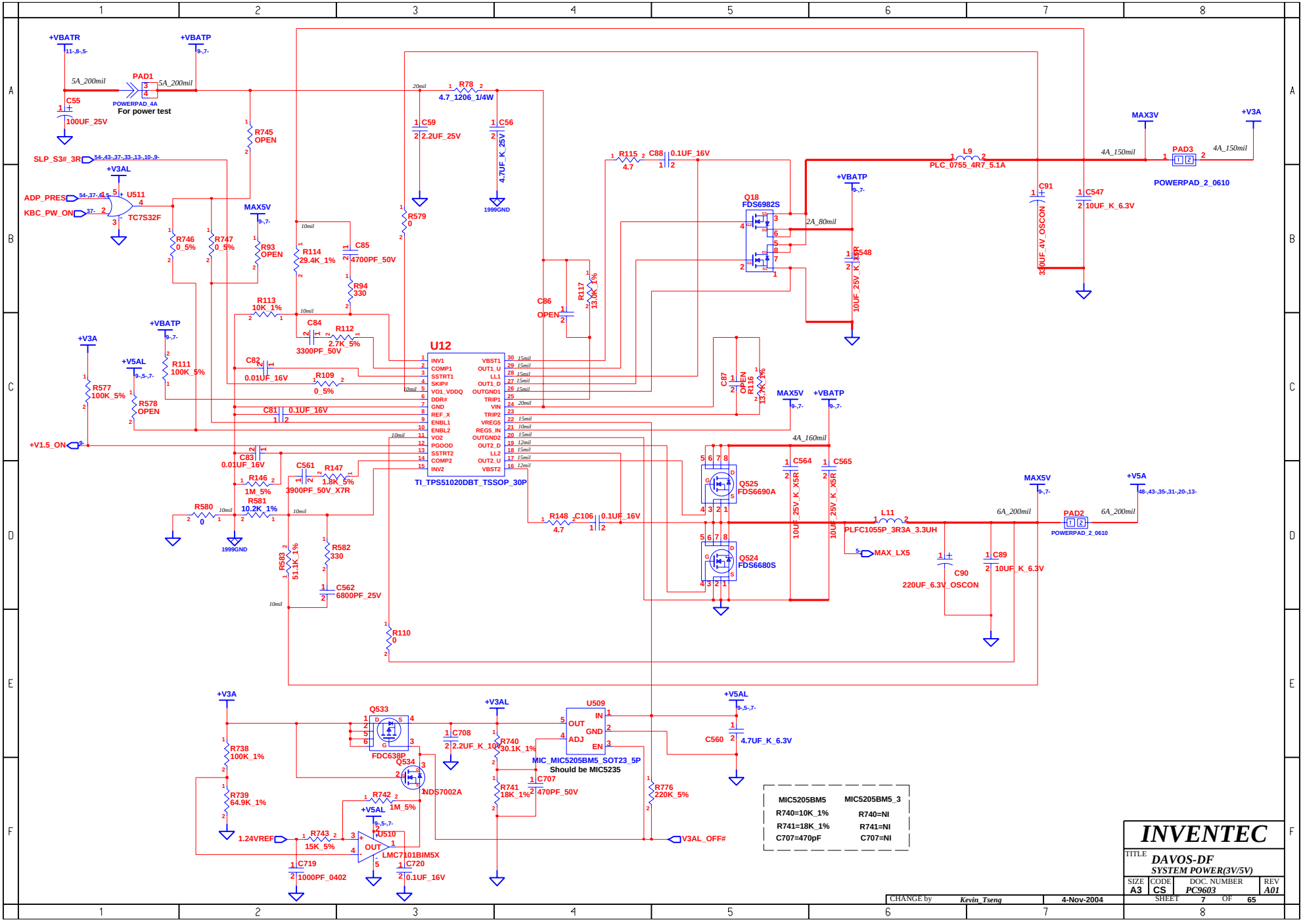
+VBATR
+VBATP
PAD1
POWERPAD_4A
For power test
C55
100UF_25V
SLP_S3#_3R
+V3AL
ADP_PRES
KBC_PW_ON
U511
TC7S32F
R745
OPEN
R746
0_5%
R747
0_5%
MAX5V
R93
OPEN
R94
330
R114
29.4K_1%
C85
4700PF_50V
R113
10K_1%
C84
3300PF_50V
R112
2.7K_5%
C82
0.01UF_16V
R109
0_5%
C81
0.1UF_16V
+V3A
+V5AL
R111
100K_5%
R577
100K_5%
R578
OPEN
+V1.5_ON
C83
0.01UF_16V
R146
1M_5%
C561
3900PF_50V_X7R
R147
1.8K_5%
R580
0
R581
10.2K_1%
1999GND
R583
511K_1%
R582
330
C562
6800PF_25V
R110
0
U12
INV1
COMP1
SSTRT1
SKIP#
VO1_VDDQ
DDR#
GND
REF_X
ENBL1
ENBL2
VO2
PGOOD
SSTRT2
COMP2
INV2
VBST1
OUT1_U
LL1
OUT1_D
OUTGND1
TRIP1
VIN
TRIP2
VREG5
REGS_IN
OUTGND2
OUT2_D
LL2
OUT2_U
VBST2
TI_TPS51020DBT_TSSOP_30P
R78
4.7_1206_1/4W
C59
2.2UF_25V
C56
4.7UF_K_25V
R579
0
R115
4.7
C88
0.1UF_16V
C86
OPEN
R117
13.0K_1%
C87
OPEN
R116
13.7K_1%
Q18
FDS6982S
R548
10UF_25V_K_X5R
L9
PLC_0755_4R7_5.1A
C91
330UF_4V_OSCON
C547
10UF_K_6.3V
MAX3V
+V3A
PAD3
POWERPAD_2_0610
Q525
FDS6690A
Q524
FDS6680S
C564
10UF_25V_K_X5R
C565
10UF_25V_K_X5R
R148
4.7
C106
0.1UF_16V
L11
PLFC1055P_3R3A_3.3UH
MAX_LX5
C90
220UF_6.3V_OSCON
C89
10UF_K_6.3V
PAD2
POWERPAD_2_0610
+V5A
Q533
FDC638P
Q534
NDS7002A
R738
100K_1%
R739
64.9K_1%
R742
1M_5%
R743
15K_5%
1.24VREF
U510
LMC7101BIM5X
C719
1000PF_0402
C720
0.1UF_16V
C708
2.2UF_K_10V
R740
30.1K_1%
R741
18K_1%
C707
470PF_50V
U509
IN
OUT
GND
ADJ
EN
MIC_MIC5205BM5_SOT23_5P
Should be MIC5235
C560
4.7UF_K_6.3V
R776
220K_5%
V3AL_OFF#
MIC5205BM5
R740=10K_1%
R741=18K_1%
C707=470pF
MIC5205BM5_3
R740=NI
R741=NI
C707=NI
INVENTEC
TITLE
DAVOS-DF
SYSTEM POWER(3V/5V)
SIZE A3
CODE CS
DOC. NUMBER PC9603
REV A01
SHEET 7 OF 65
CHANGE by Kevin_Tseng
4-Nov-2004

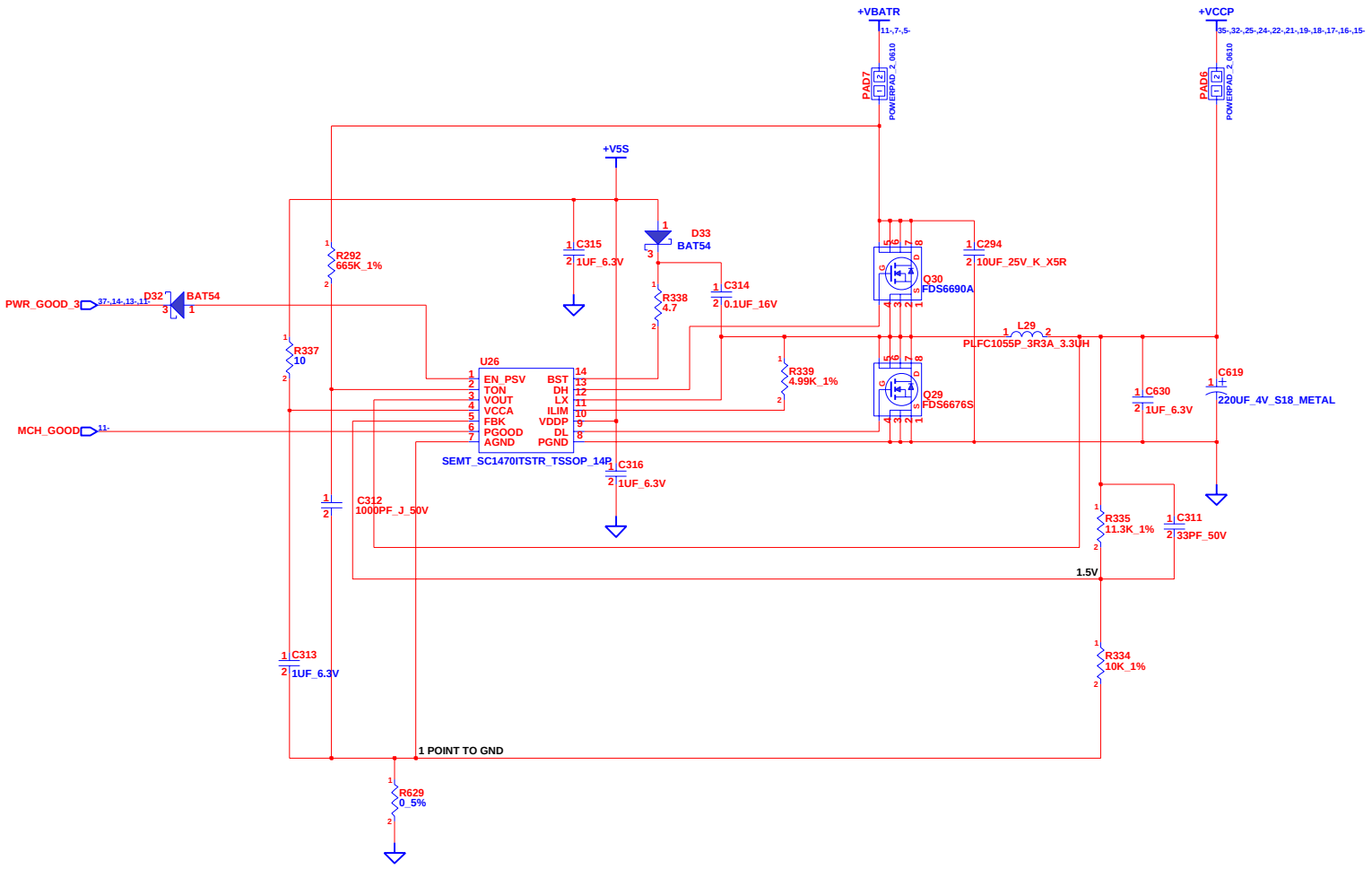

INVENTEC

TITLE
DAVOS-DF
SYSTEM POWER(+VCCP)

SIZE	CODE	DOC. NUMBER	REV
A3	CS	PC9603	A01

SHEET 8 OF 65

CHANGE by	Kevin_Tseng	4-Nov-2004

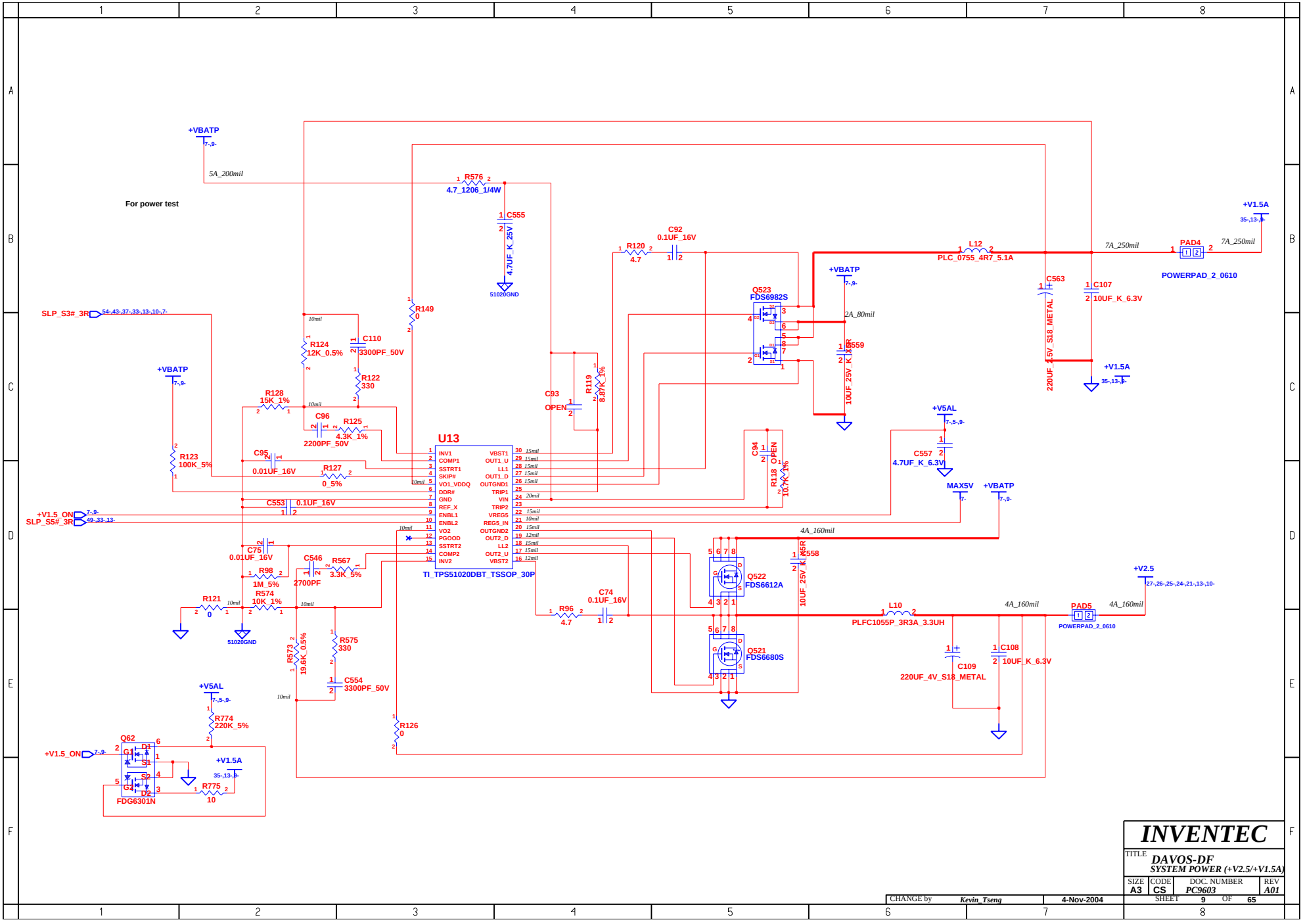

CHANGE by	Kevin_Tseng	4-Nov-2004	

INVENTEC

TITLE **DAVOS-DF**
SYSTEM POWER (+V2.5/+V1.5A)

SIZE	CODE	DOC. NUMBER	REV
A3	CS	PC9603	A01

SHEET 9 OF 65

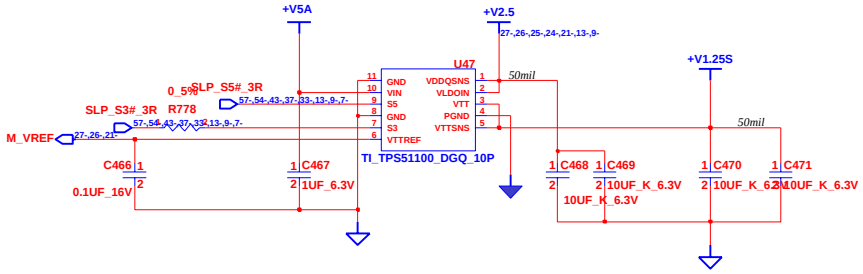

CHANGE by	Kevin_Tseng	4-Nov-2004	

INVENTEC

TITLE **DAVOS-DF**
SYSTEM POWER(+V1.25S)

SIZE	CODE	DOC. NUMBER	REV
A3	CS	PC9603	A01

SHEET 10 OF 65

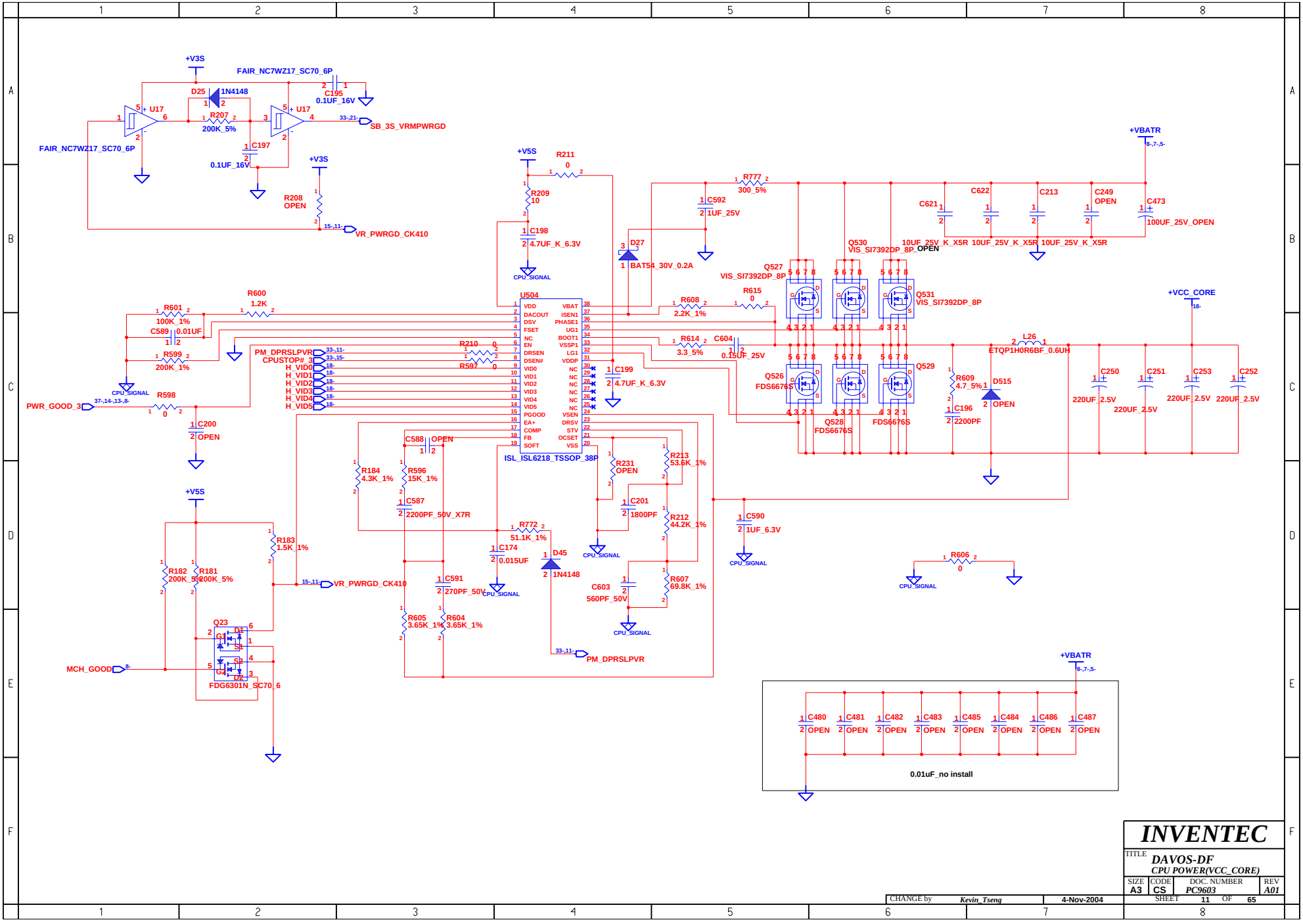
+V3S
FAIR_NC7WZ17_SC70_6P
D25
1N4148
R207
200K_5%
C195
0.1UF_16V
U17
SB_3S_VRMPWRGD
C197
0.1UF_16V
R208
OPEN
VR_PWRGD_CK410
+V5S
R211
0
R209
10
C198
4.7UF_K_6.3V
CPU_SIGNAL
D27
BAT54_30V_0.2A
R777
300_5%
C592
1UF_25V
+VBATR
C621
C622
C213
C249
OPEN
C473
100UF_25V_OPEN
10UF_25V_K_X5R
Q530
VIS_SI7392DP_8P_OPEN
Q527
VIS_SI7392DP_8P
Q531
VIS_SI7392DP_8P
+VCC_CORE
R600
1.2K
R601
100K_1%
C589
0.01UF
R599
200K_1%
U504
VDD
DACOUT
DSV
FSET
NC
EN
DRSEN
DSENII
VID0
VID1
VID2
VID3
VID4
VID5
PGOOD
EA+
COMP
FB
SOFT
VBAT
ISEN1
PHASE1
UG1
BOOT1
VSSP1
LG1
VDDP
NC
VSEN
DRSV
STV
OCSET
VSS
ISL_ISL6218_TSSOP_38P
R608
2.2K_1%
R615
0
R614
3.3_5%
C604
0.15UF_25V
C199
4.7UF_K_6.3V
L26
ETQP1H0R6BF_0.6UH
Q526
FDS6676S
Q528
FDS6676S
Q529
FDS6676S
R609
4.7_5%
D515
OPEN
C196
2200PF
C250
C251
C253
C252
220UF_2.5V
PM_DPRSLPVR
CPUSTOP#
H_VID0
H_VID1
H_VID2
H_VID3
H_VID4
H_VID5
R210
R597
PWR_GOOD_3
R598
C200
OPEN
C588
OPEN
R184
4.3K_1%
R596
15K_1%
C587
2200PF_50V_X7R
R231
OPEN
R213
53.6K_1%
C201
1800PF
R212
44.2K_1%
C590
1UF_6.3V
R772
51.1K_1%
C174
0.015UF
D45
1N4148
C591
270PF_50V
C603
560PF_50V
R607
69.8K_1%
R605
3.65K_1%
R604
3.65K_1%
R606
0
R183
1.5K_1%
R182
200K_5%
R181
200K_5%
Q23
FDG6301N_SC70_6
MCH_GOOD
C480
C481
C482
C483
C485
C484
C486
C487
OPEN
0.01uF_no install
INVENTEC
TITLE
DAVOS-DF
CPU POWER(VCC_CORE)
SIZE A3
CODE CS
DOC. NUMBER PC9603
REV A01
SHEET 11 OF 65
CHANGE by Kevin_Tseng
4-Nov-2004

BLANK

INVENTEC					
TITLE DAVOS-DF					
SIZE A3	CODE CS	DOC. NUMBER PC9603			REV A01
CHANGE by Kevin_Tseng	4-Nov-2004	SHEET 12 OF 65			

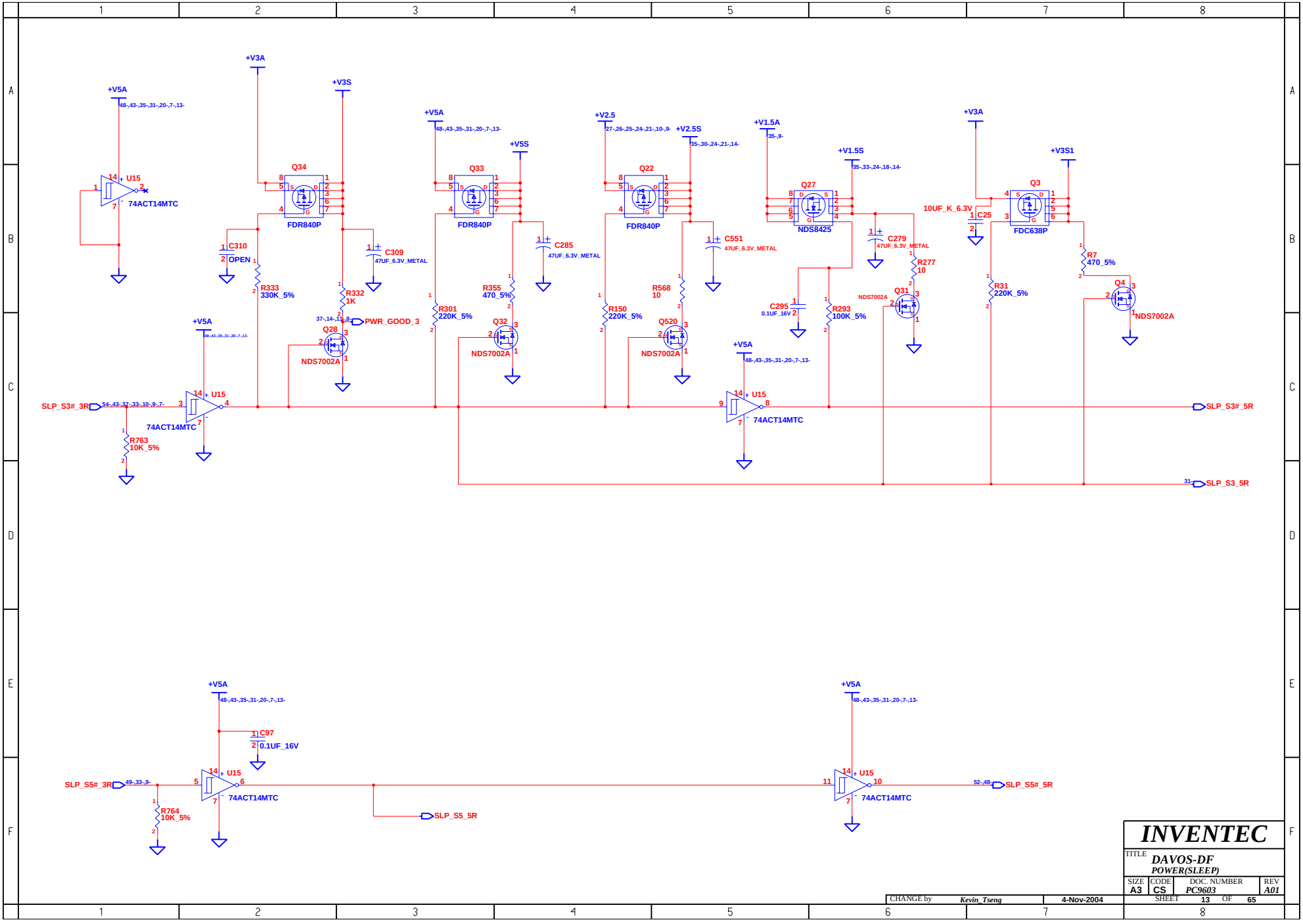

INVENTEC

TITLE **DAVOS-DF**
POWER(SLEEP)

SIZE	CODE	DOC. NUMBER	REV
A3	CS	PC9603	A01

CHANGE by Kevin_Tseng 4-Nov-2004

SHEET 13 OF 65

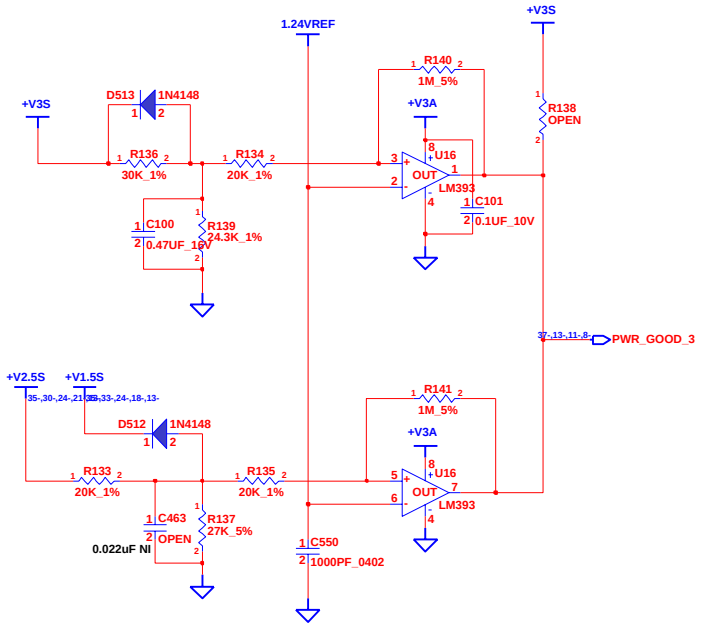

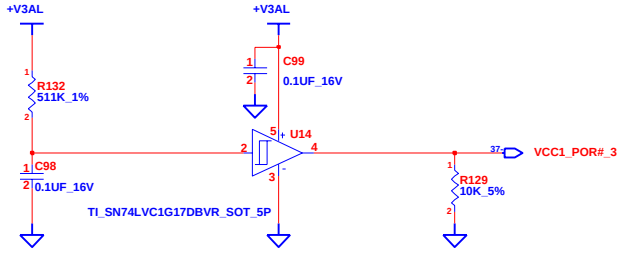

CHANGE by	Kevin_Tseng	4-Nov-2004	

INVENTEC

TITLE *DAVOS-DF*
POWER(SEQUENCE)

SIZE	CODE	DOC. NUMBER	REV
A3	CS	PC9603	A01

SHEET 14 OF 65

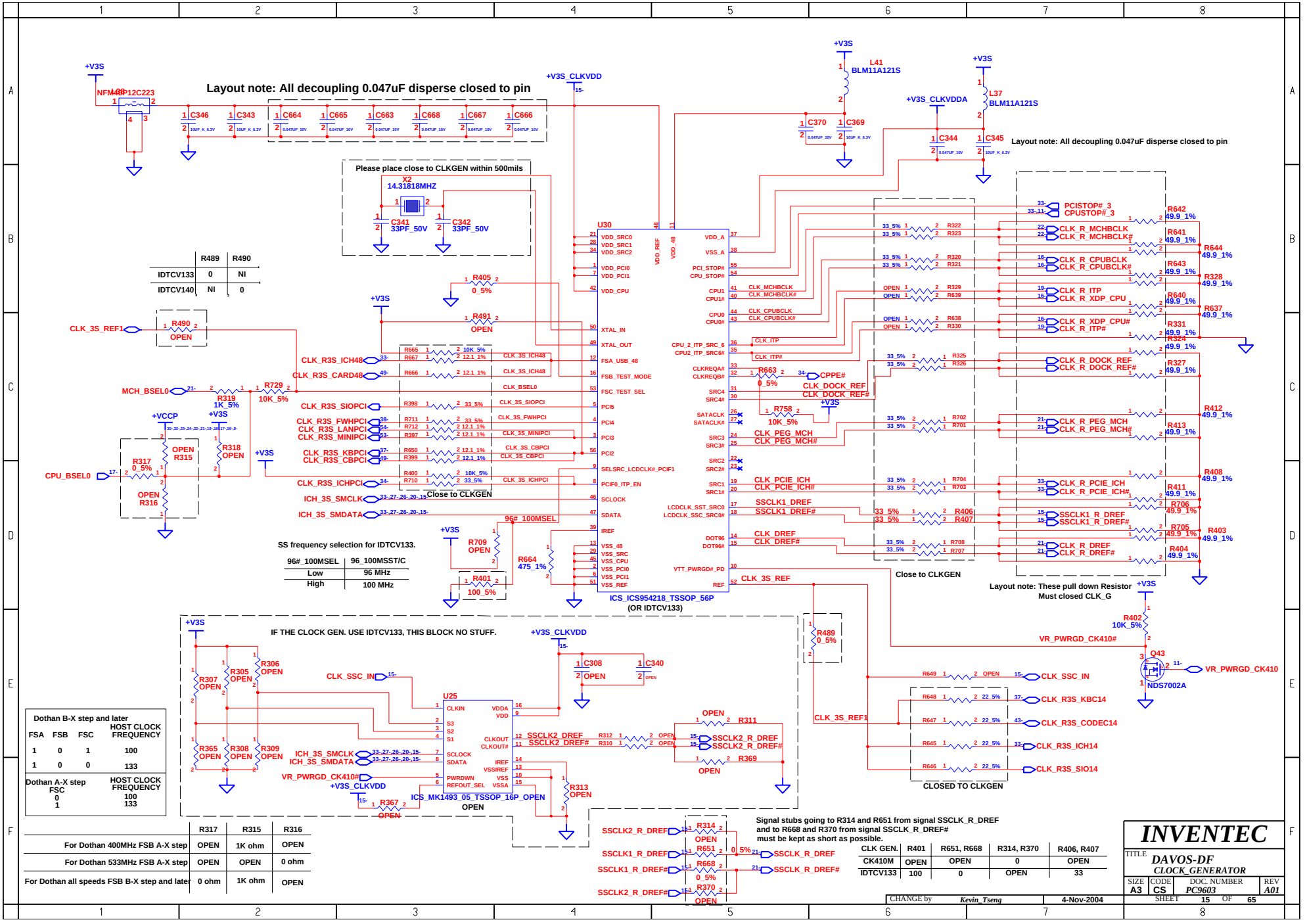

	R489	R490
IDTCV133	0	NI
IDTCV140	NI	0

96#_100MSEL	96_100MSST/C
Low	96 MHz
High	100 MHz

Dothan B-X step and later FSA	FSB	FSC	HOST CLOCK FREQUENCY
1	0	1	100
1	0	0	133

Dothan A-X step FSC	HOST CLOCK FREQUENCY
0	100
1	133

	R317	R315	R316
For Dothan 400MHz FSB A-X step	OPEN	1K ohm	OPEN
For Dothan 533MHz FSB A-X step	OPEN	OPEN	0 ohm
For Dothan all speeds FSB B-X step and later	0 ohm	1K ohm	OPEN

CLK GEN.	R401	R651, R668	R314, R370	R406, R407
CK410M	OPEN	OPEN	0	OPEN
IDTCV133	100	0	OPEN	33

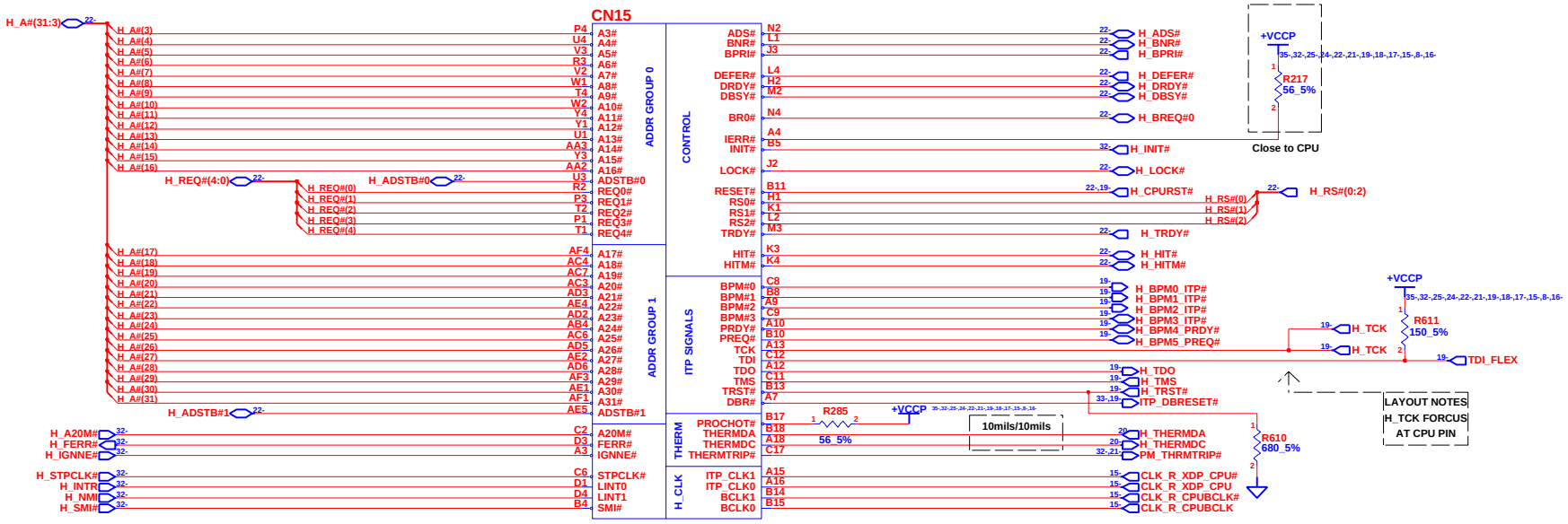

AMP_uFCPGA478M_478P_Dothan

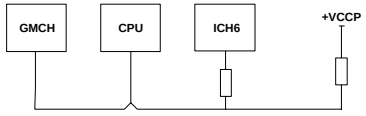

PM_THRMTRIP# should be T at CPU

CHANGE by	Kevin_Tseng	4-Nov-2004	

INVENTEC

TITLE *DAVOS-DF*
DOTHAN-1

SIZE	CODE	DOC. NUMBER	REV
A3	CS	PC9603	A01

SHEET 16 OF 65

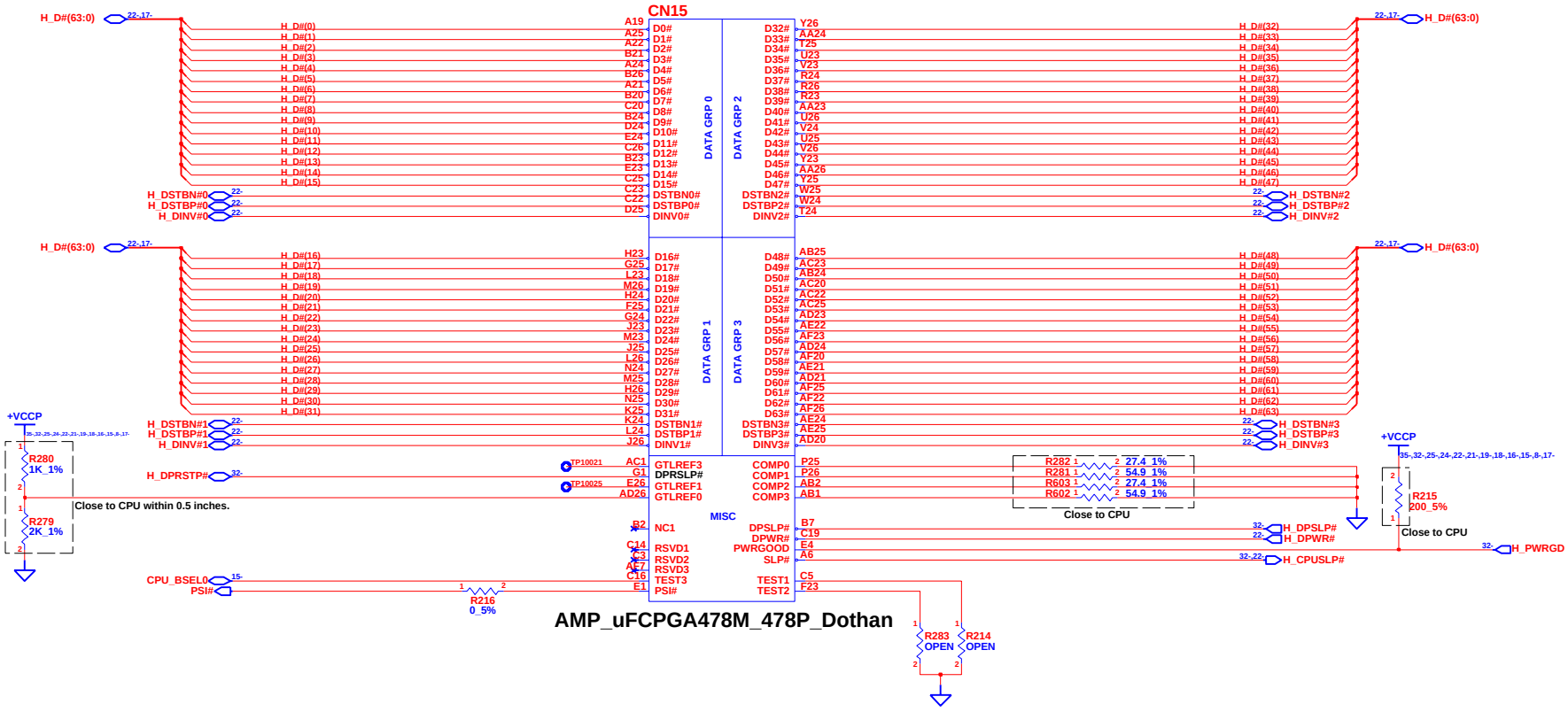

INVENTEC					
TITLE	DAVOS-DF DOTHAN-2				
SIZE	CODE	DOC. NUMBER		REV	
A3	CS	PC9603		A01	
CHANGE by	Kevin_Tseng	4-Nov-2004	SHEET	17	OF 65

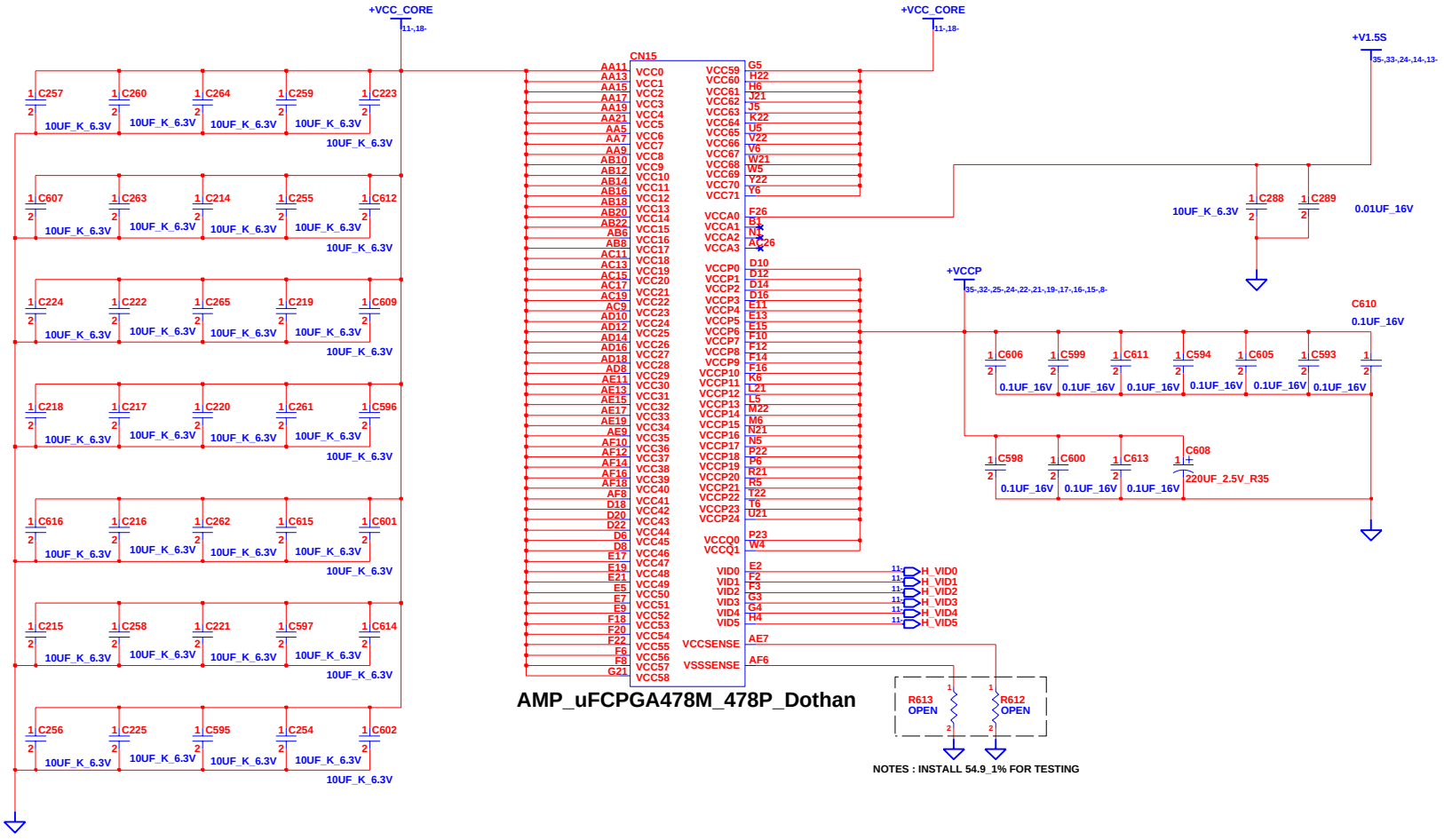

INVENTEC

TITLE DAVOS-DF
DOTHAN-3

SIZE	CODE	DOC. NUMBER	REV
A3	CS	PC9603	A01

SHEET 18 OF 65

CHANGE by Kevin_Tseng 4-Nov-2004

In-Target Probe

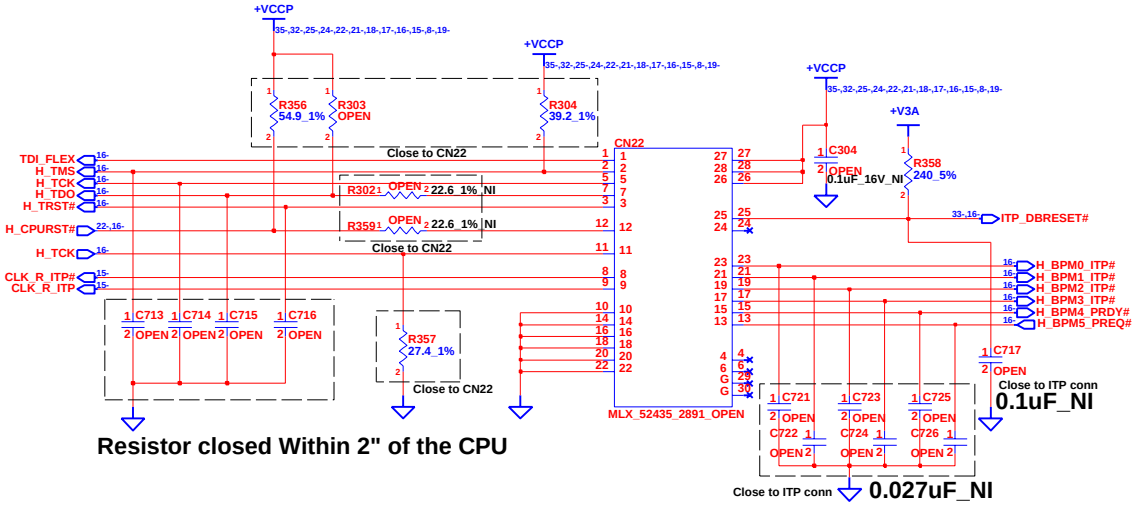

Resistor closed Within 2" of the CPU

LAYOUT NOTES : H_CPURST# PIN OF MCH_M FORK OUT INTO TWO BRANCHES ON CPU AND ITP CONNECTOR

CHANGE by	Kevin_Tseng	4-Nov-2004	

INVENTEC

TITLE: DAVOS-DF
DOTHAN-4

SIZE	CODE	DOC. NUMBER	REV
A3	CS	PC9603	A01

SHEET 19 OF 65

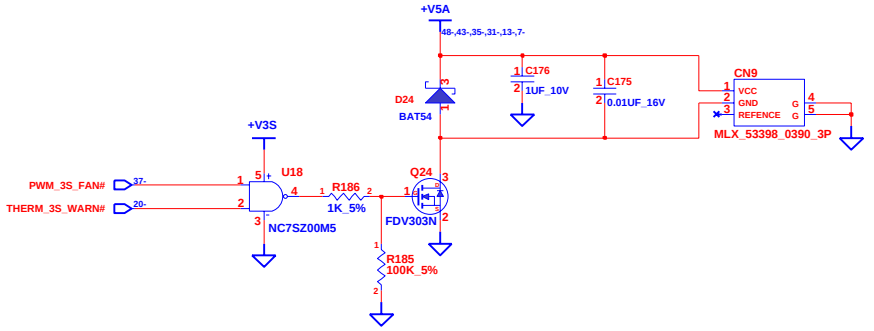

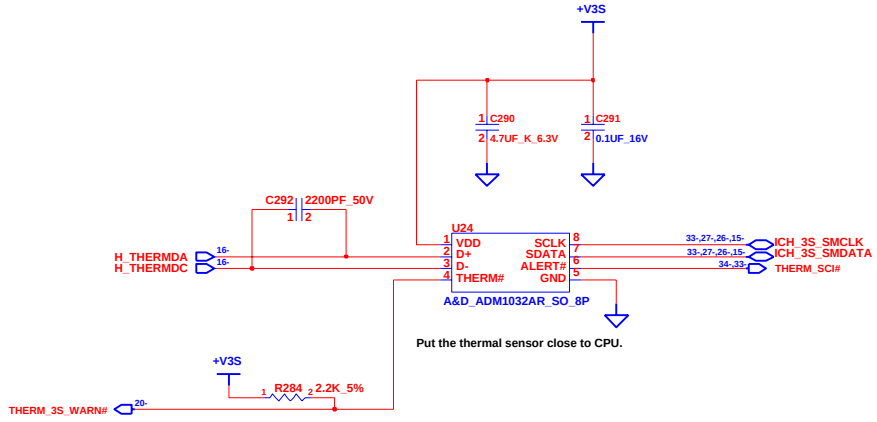

Put the thermal sensor close to CPU.

INVENTEC

TITLE **DAVOS-DF**
THERMAL&FAN CONTROLLER

SIZE	CODE	DOC. NUMBER	REV
A3	CS	PC9603	A01

CHANGE by Kevin_Tseng 4-Nov-2004

SHEET 20 OF 65

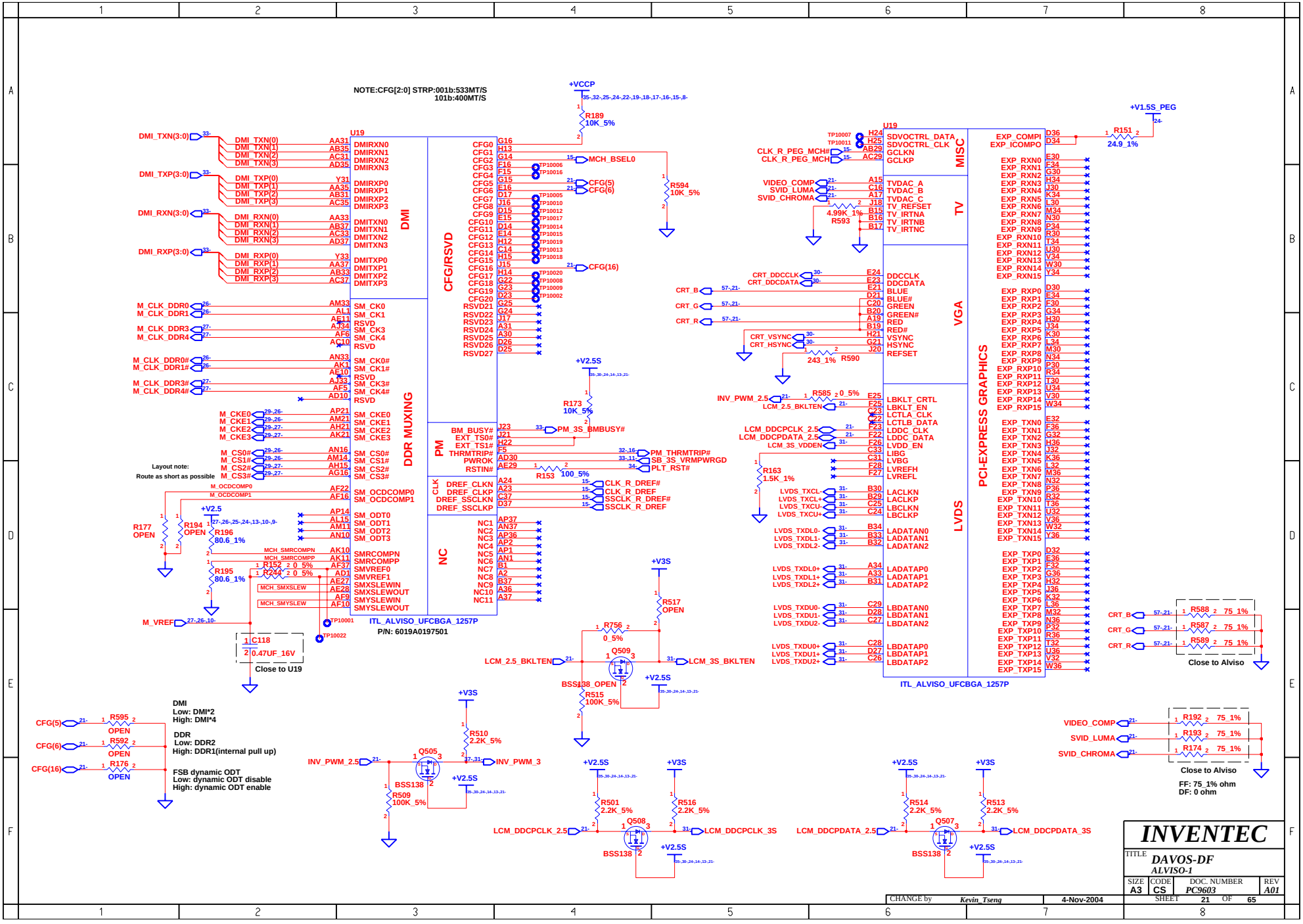
NOTE:CFG[2:0] STRP:001b:533MT/S
101b:400MT/S
U19
DMI
DDR MUXING
CFG/RSVD
PM
CLK
NC
ITL_ALVISO_UFCBGA_1257P
P/N: 6019A0197501
MISC
TV
VGA
LVDS
PCI-EXPRESS GRAPHICS
ITL_ALVISO_UFCBGA_1257P
Layout note:
Route as short as possible
Close to U19
Close to Alviso
Close to Alviso
DMI
Low: DMI*2
High: DMI*4
DDR
Low: DDR2
High: DDR1(internal pull up)
FSB dynamic ODT
Low: dynamic ODT disable
High: dynamic ODT enable
FF: 75_1% ohm
DF: 0 ohm
INVENTEC
TITLE
DAVOS-DF
ALVISO-1
SIZE A3
CODE CS
DOC. NUMBER PC9603
REV A01
SHEET 21 OF 65
CHANGE by Kevin_Tseng
4-Nov-2004

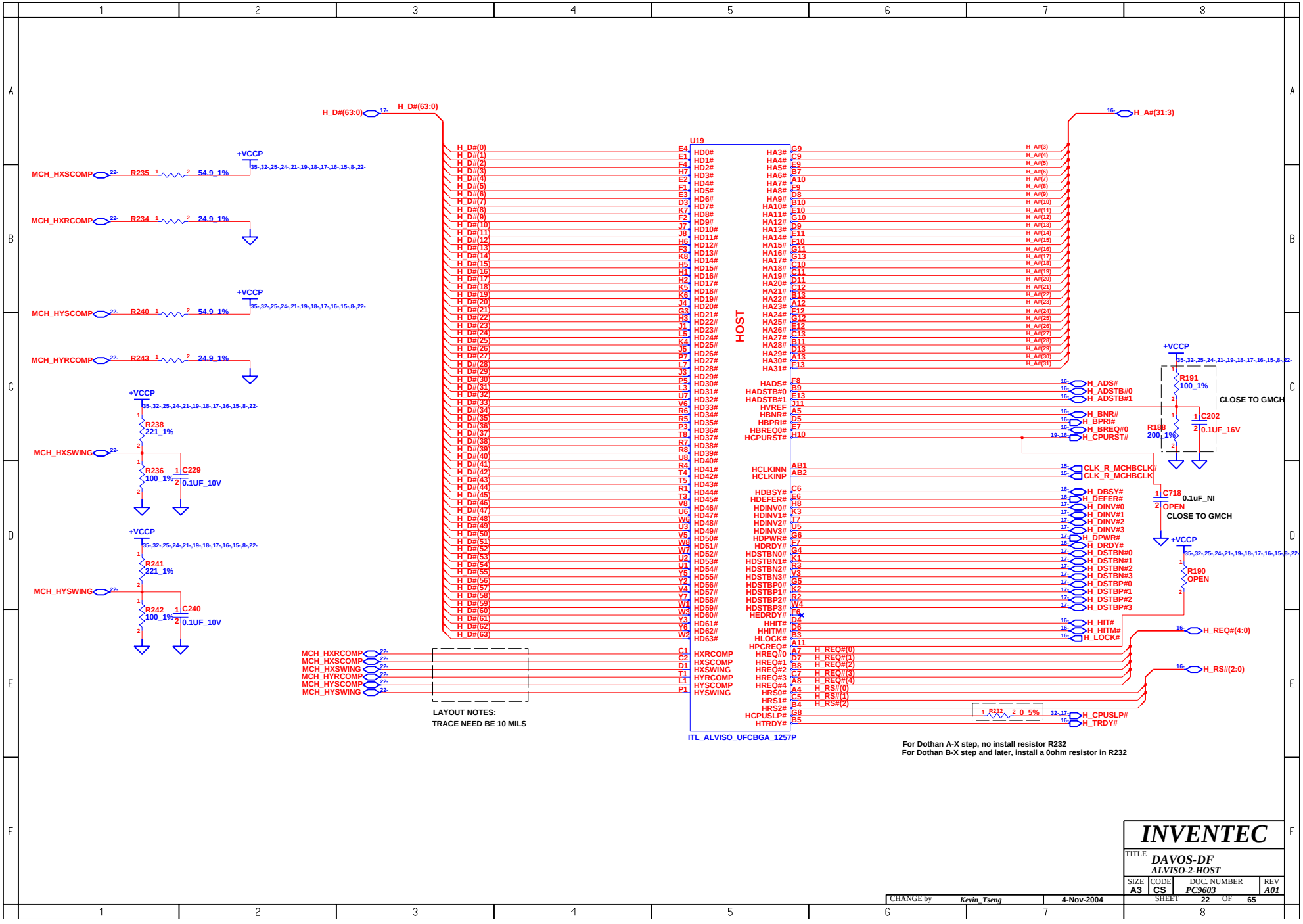
U19
HOST
ITL_ALVISO_UFCBGA_1257P
H_D#(63:0)
H_A#(31:3)
MCH_HXSCOMP
R235 54.9_1%
MCH_HXRCOMP
R234 24.9_1%
MCH_HYSCOMP
R240 54.9_1%
MCH_HYRCOMP
R243 24.9_1%
MCH_HXSWING
R238 221_1%
R236 100_1%
C229 0.1UF_10V
MCH_HYSWING
R241 221_1%
R242 100_1%
C240 0.1UF_10V
+VCCP
R191 100_1%
CLOSE TO GMCH
R188 200_1%
C202 0.1UF_16V
C718 0.1uF_NI
OPEN
CLOSE TO GMCH
R190 OPEN
R232 0_5%
H_ADS#
H_ADSTB#0
H_ADSTB#1
H_BNR#
H_BPRI#
H_BREQ#0
H_CPURST#
CLK_R_MCHBCLK#
CLK_R_MCHBCLK
H_DBSY#
H_DEFER#
H_DINV#0
H_DINV#1
H_DINV#2
H_DINV#3
H_DPWR#
H_DRDY#
H_DSTBN#0
H_DSTBN#1
H_DSTBN#2
H_DSTBN#3
H_DSTBP#0
H_DSTBP#1
H_DSTBP#2
H_DSTBP#3
H_HIT#
H_HITM#
H_LOCK#
H_REQ#(4:0)
H_REQ#(0)
H_REQ#(1)
H_REQ#(2)
H_REQ#(3)
H_REQ#(4)
H_RS#(2:0)
H_RS#(0)
H_RS#(1)
H_RS#(2)
H_CPUSLP#
H_TRDY#
MCH_HXRCOMP
MCH_HXSCOMP
MCH_HXSWING
MCH_HYRCOMP
MCH_HYSCOMP
MCH_HYSWING
LAYOUT NOTES:
TRACE NEED BE 10 MILS
For Dothan A-X step, no install resistor R232
For Dothan B-X step and later, install a 0ohm resistor in R232
INVENTEC
TITLE
DAVOS-DF
ALVISO-2-HOST
SIZE A3
CODE CS
DOC. NUMBER PC9603
REV A01
CHANGE by Kevin_Tseng
4-Nov-2004
SHEET 22 OF 65

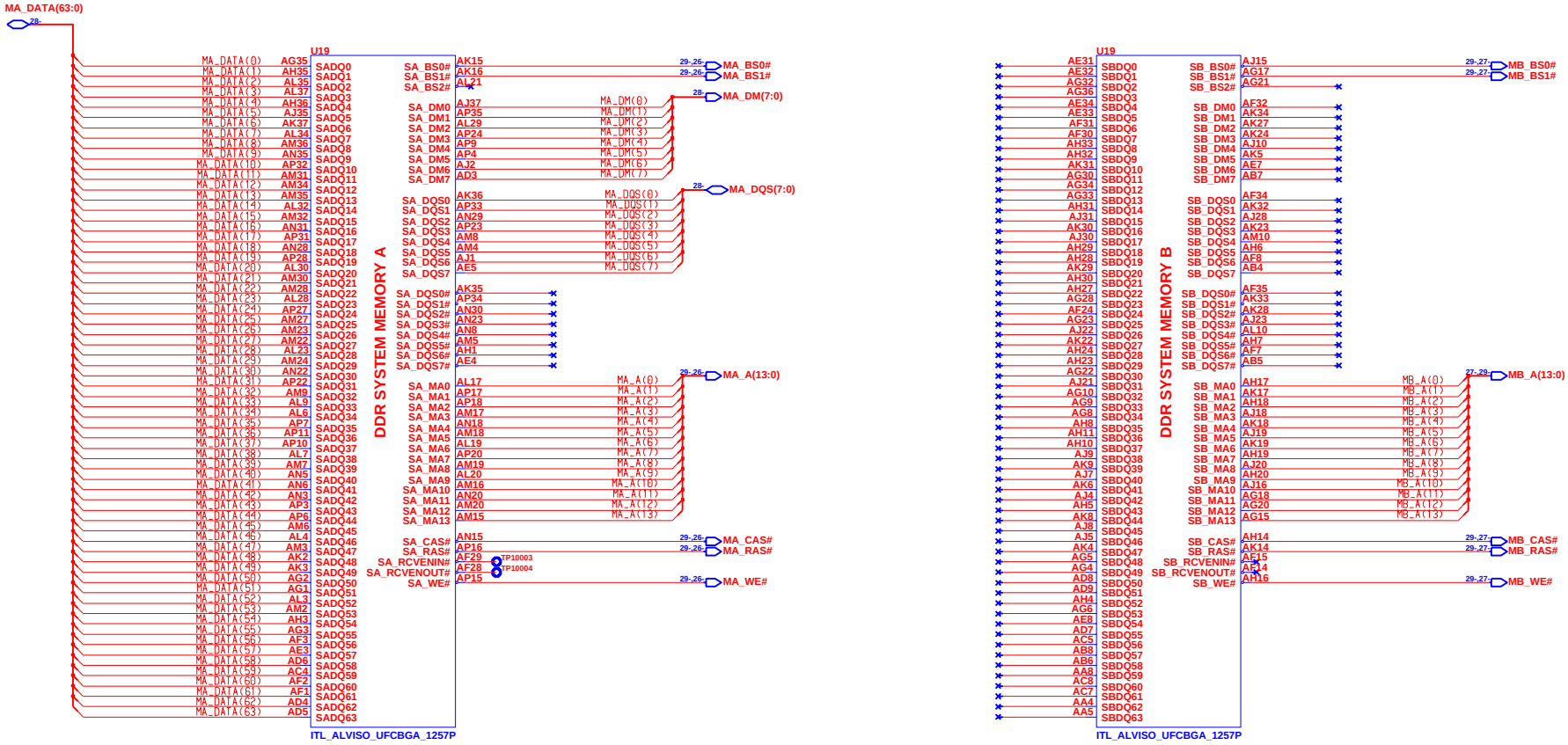

CHANGE by	Kevin_Tseng	4-Nov-2004	

INVENTEC

TITLE: *DAVOS-DF*
ALVISO-3-DDR

SIZE	CODE	DOC. NUMBER	REV
A3	CS	PC9603	A01

SHEET 23 OF 65

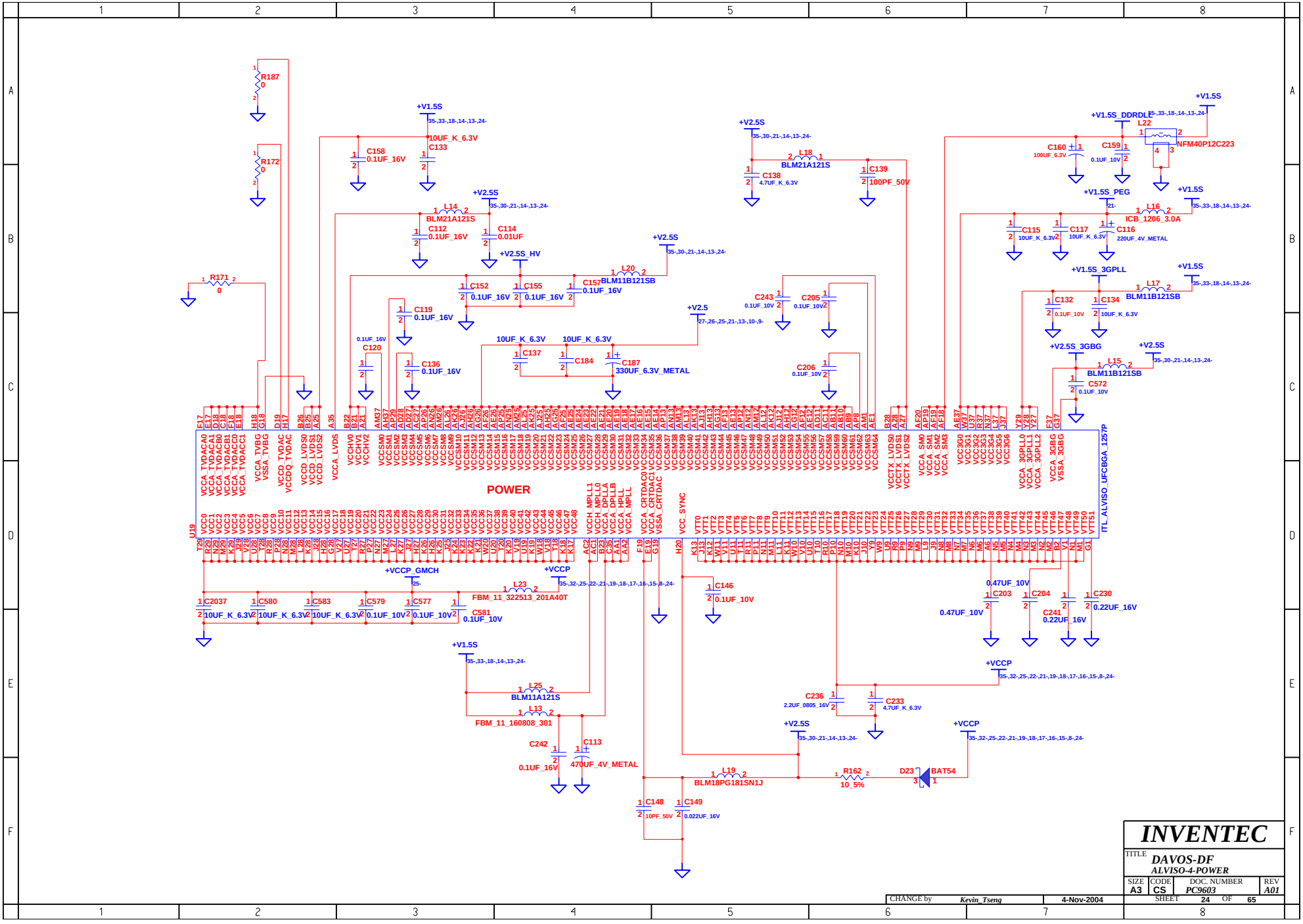
POWER
U19
ITL_ALVISO_UFCBGA_1257P
R187 0
R172 0
R171 0
+V1.5S
+V2.5S
+V2.5S_HV
+V2.5
+V1.5S_DDRDLL
+V1.5S_PEG
+V1.5S_3GPLL
+V2.5S_3GBG
+VCCP_GMCH
+VCCP
C158 0.1UF_16V
C133 10UF_K_6.3V
L14 BLM21A121S
C112 0.1UF_16V
C114 0.01UF
L20 BLM11B121SB
C152 0.1UF_16V
C155 0.1UF_16V
C157 0.1UF_16V
C119 0.1UF_16V
C120 0.1UF_16V
C136 0.1UF_16V
C137 10UF_K_6.3V
C184 10UF_K_6.3V
C187 330UF_6.3V_METAL
L18 BLM21A121S
C138 4.7UF_K_6.3V
C139 100PF_50V
C243 0.1UF_10V
C205 0.1UF_10V
C206 0.1UF_10V
L22 NFM40P12C223
C160 100UF_6.3V
C159 0.1UF_10V
L16 ICB_1206_3.0A
C115 10UF_K_6.3V
C117 10UF_K_6.3V
C116 220UF_4V_METAL
L17 BLM11B121SB
C132 0.1UF_10V
C134 10UF_K_6.3V
L15 BLM11B121SB
C572 0.1UF_10V
C2037 10UF_K_6.3V
C580 10UF_K_6.3V
C583 10UF_K_6.3V
C579 0.1UF_10V
C577 0.1UF_10V
L23 FBM_11_322513_201A40T
C581 0.1UF_10V
C146 0.1UF_10V
C203 0.47UF_10V
C204 0.47UF_10V
C241 0.22UF_16V
C230 0.22UF_16V
L25 BLM11A121S
L13 FBM_11_160808_301
C242 0.1UF_16V
C113 470UF_4V_METAL
C236 2.2UF_0805_16V
C233 4.7UF_K_6.3V
L19 BLM18PG181SN1J
R162 10_5%
D23 BAT54
C148 10PF_50V
C149 0.022UF_16V
VCCA_TVDACA0
VCCA_TVDACA1
VCCA_TVDACB0
VCCA_TVDACB1
VCCA_TVDACC0
VCCA_TVDACC1
VCCA_TVBG
VSSA_TVBG
VCCD_TVDAC
VCCDQ_TVDAC
VCCD_LVDS0
VCCD_LVDS1
VCCD_LVDS2
VCCA_LVDS
VCCH_MPLL1
VCCH_MPLL0
VCCA_DPLLA
VCCA_DPLLB
VCCA_HPLL
VCCA_MPLL
VCCA_CRTDAC0
VCCA_CRTDAC1
VCCA_CRTDAC
VSSA_CRTDAC
VCC_SYNC
VCCTX_LVDS0
VCCTX_LVDS1
VCCTX_LVDS2
VCCA_SM0
VCCA_SM1
VCCA_SM2
VCCA_SM3
VCCA_3GPLL0
VCCA_3GPLL1
VCCA_3GPLL2
VCCA_3GBG
VSSA_3GBG
INVENTEC
TITLE DAVOS-DF
ALVISO-4-POWER
SIZE A3
CODE CS
DOC. NUMBER PC9603
REV A01
SHEET 24 OF 65
CHANGE by Kevin_Tseng
4-Nov-2004

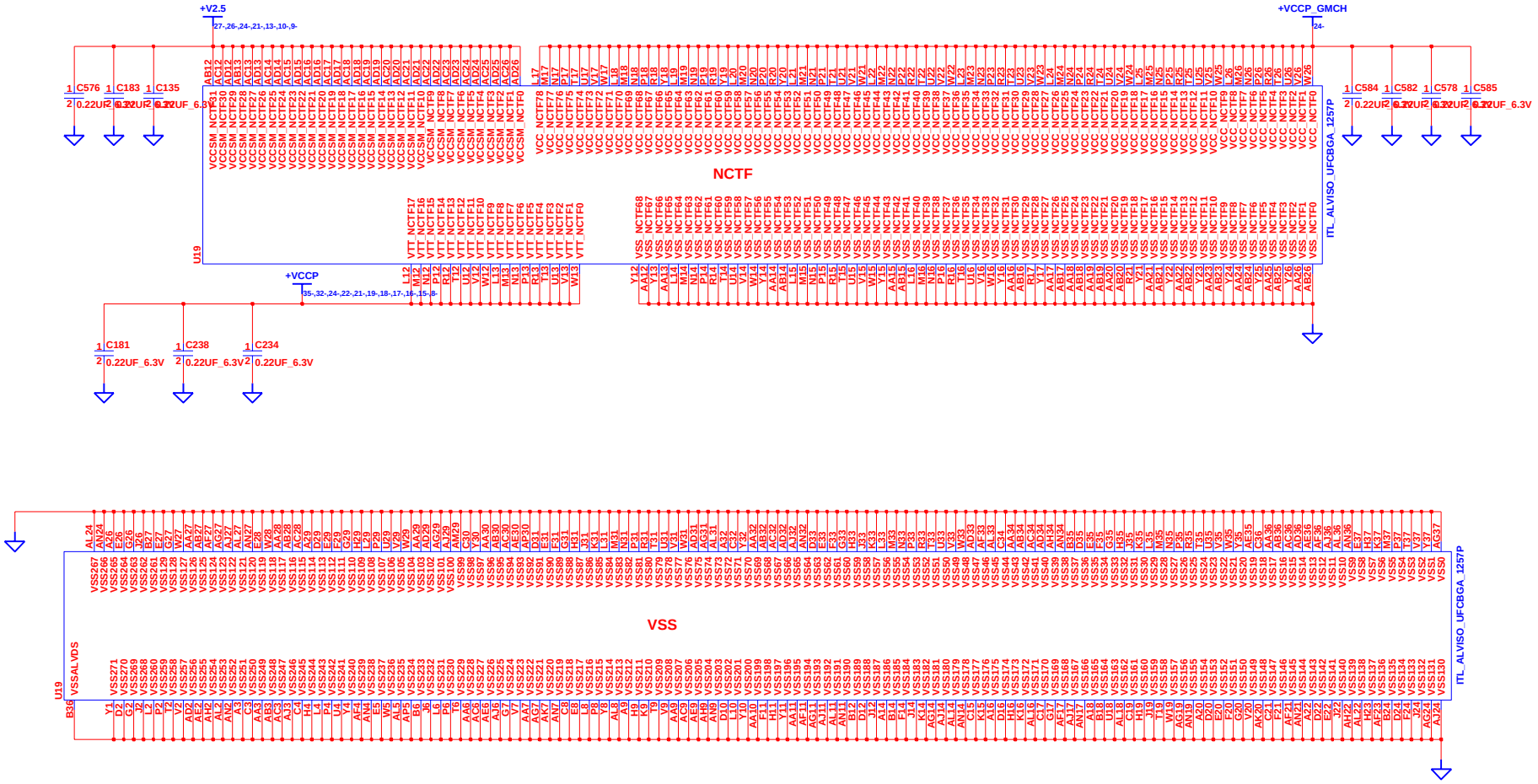

INVENTEC

TITLE **DAVOS-DF**
ALVISO-5-POWER

SIZE	CODE	DOC. NUMBER	REV
A3	CS	PC9603	A01

SHEET 25 OF 65

CHANGE by	Kevin_Tseng	4-Nov-2004

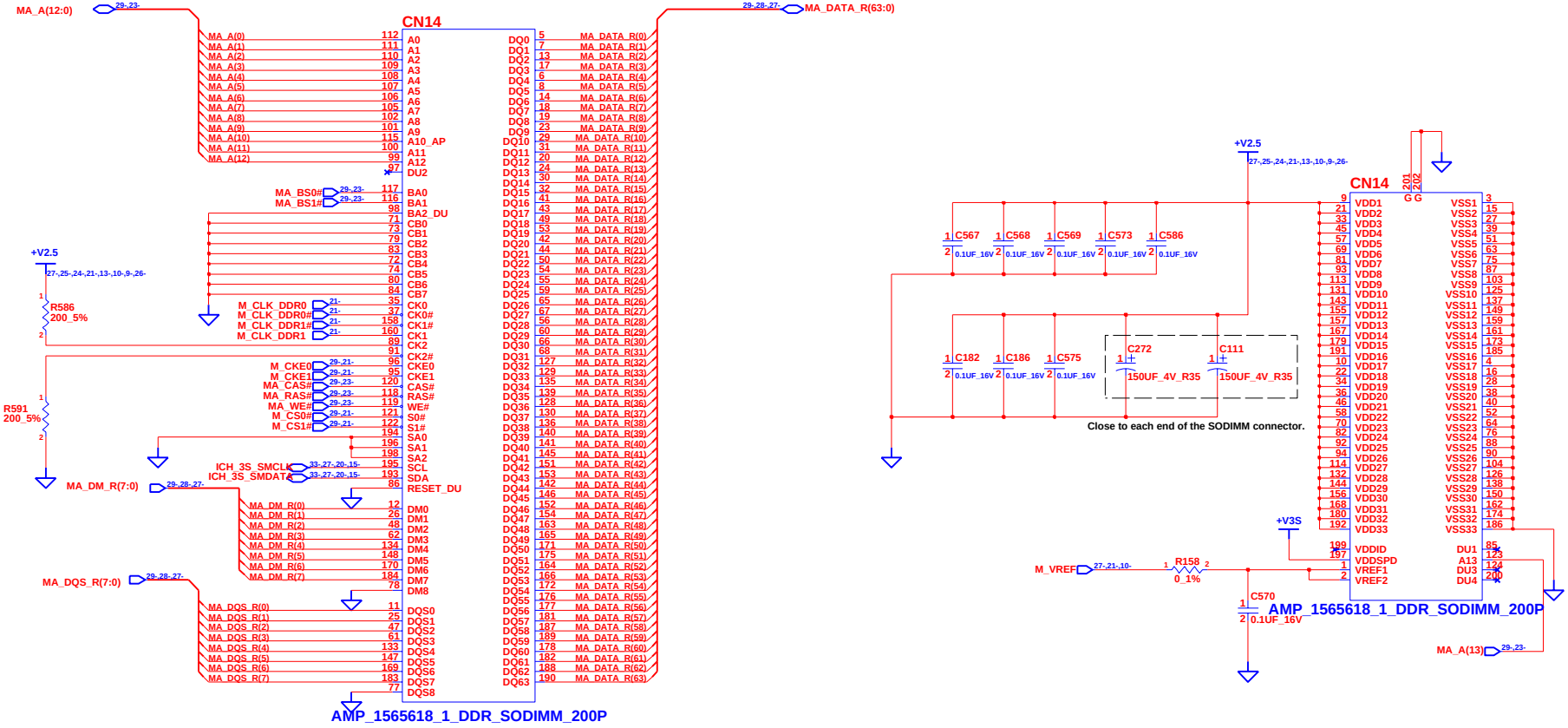

SO DIMM0

INVENTEC			
TITLE DAVOS-DF DDR-DIMM-0			
SIZE A3	CODE CS	DOC. NUMBER PC9603	REV A01
		SHEET 26 OF 65	

CHANGE by Kevin_Tseng 4-Nov-2004

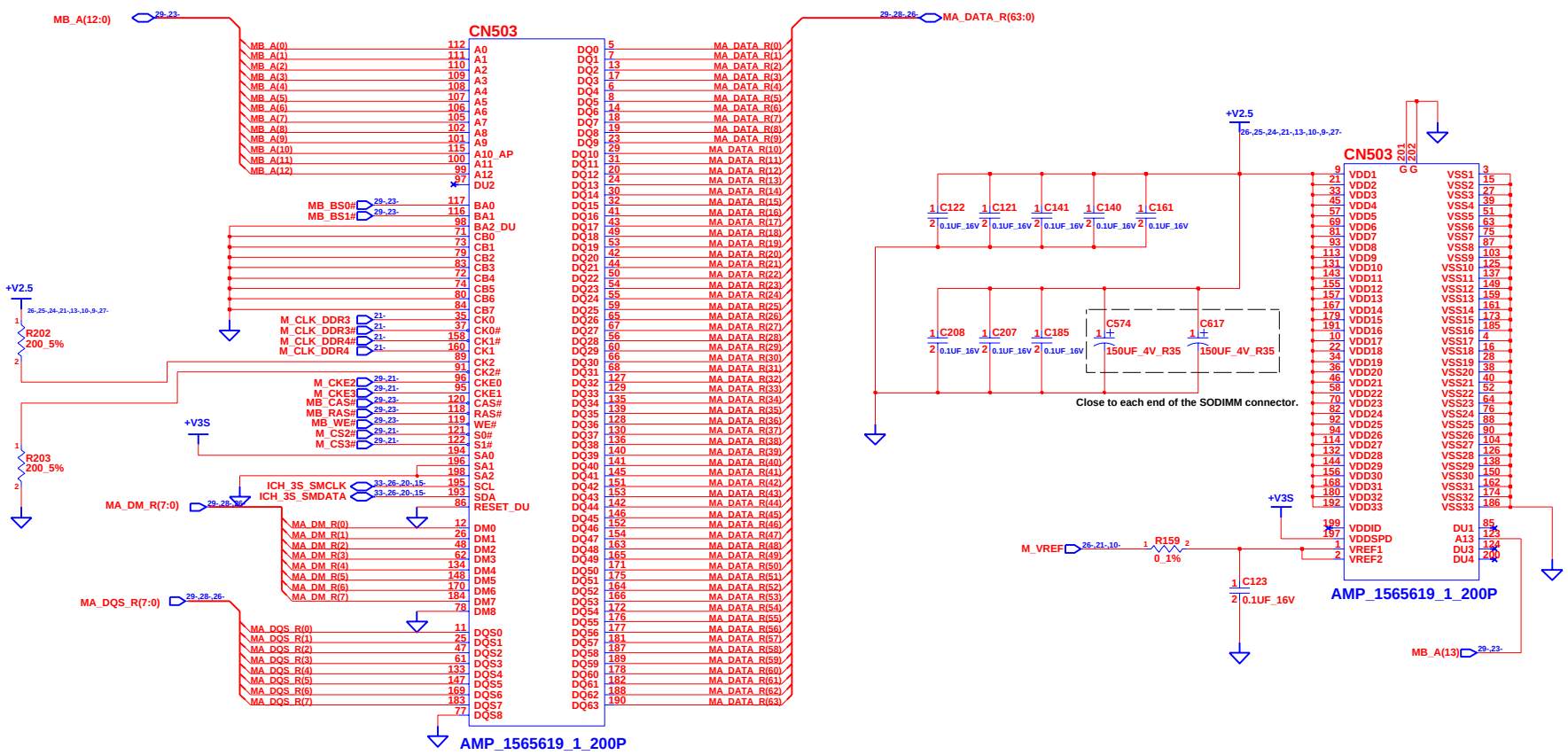

SO DIMM1

INVENTEC			
TITLE DAVOS-DF DDR-DIMM-1			
SIZE A3	CODE CS	DOC. NUMBER PC9603	REV A01
CHANGE by Kevin_Tseng	4-Nov-2004	SHEET 27 OF 65	

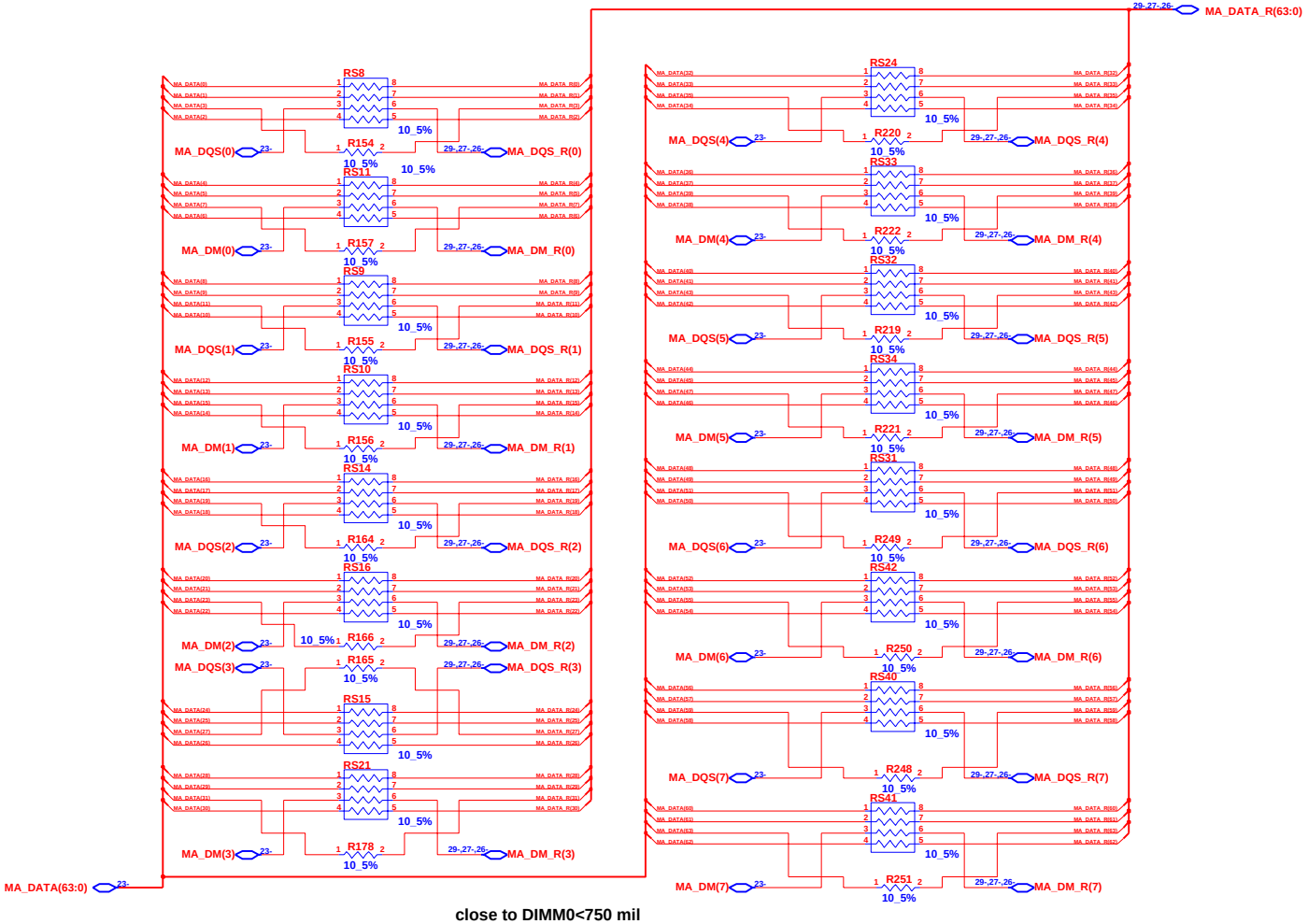

close to DIMM0<750 mil

Engineer Jerry_Huang	INVENTEC					
Drawn by Kevin_Tseng						
R&D CHK	TITLE DAVOS-DF DDR DAMPING RESISTORS					Size A3
DOC CTRL CHK						
MFG ENGR CHK						
Changed by DAVOS	Date Changed 4-Nov-2004	Time Changed 6:51:15 pm	QA CHK	VER A01	Model Number PC9603	Sheet 28 of 65

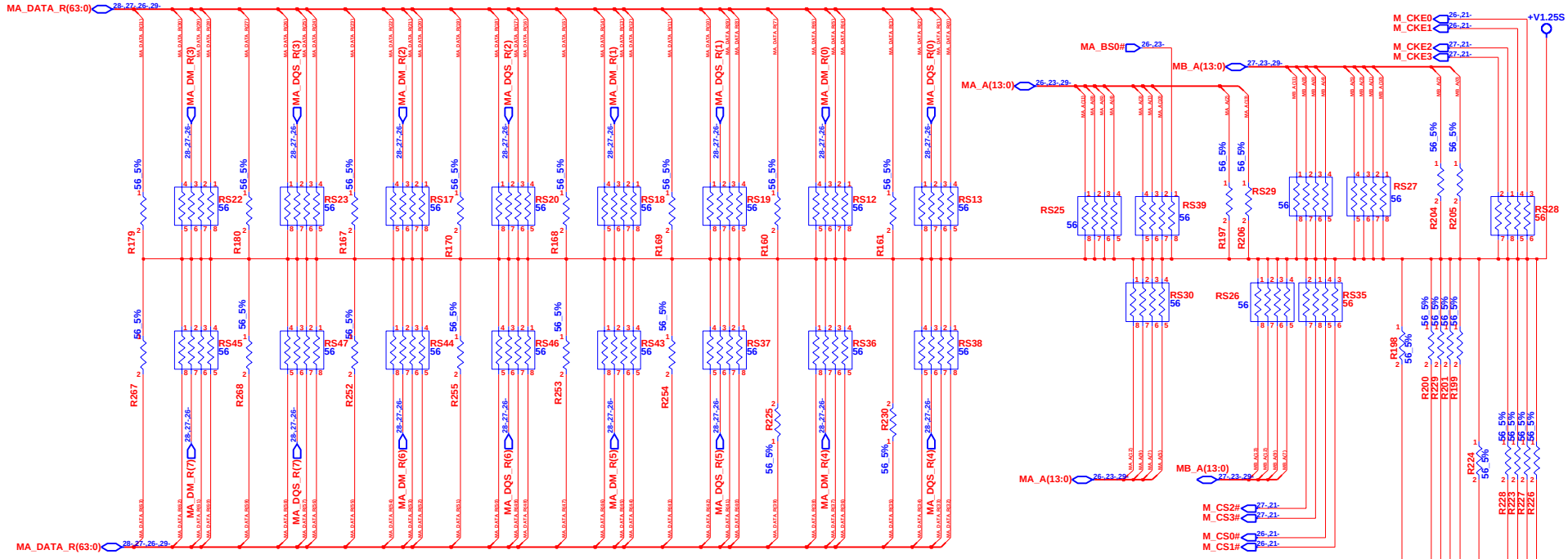

close to DIMM1< 800mil

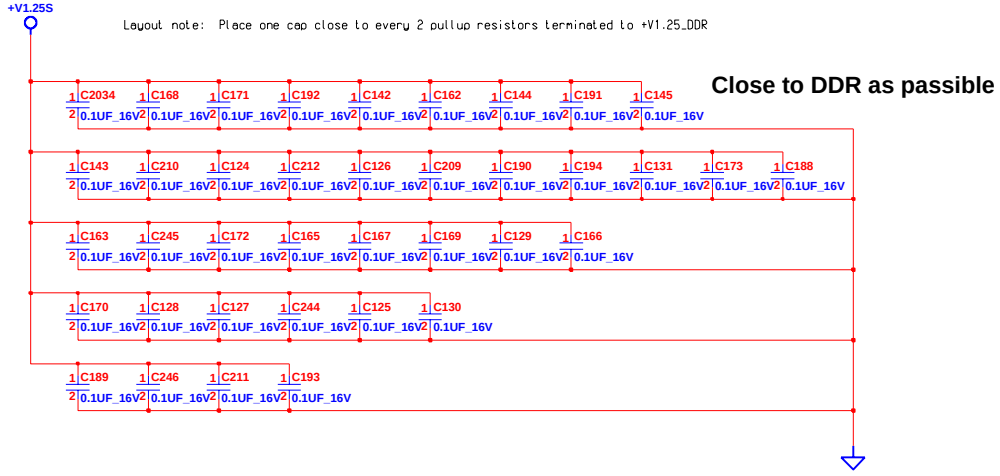

Close to DDR as passible

Engineer Jerry_Huang	INVENTEC					
Drawn by Kevin_Tseng						
R&D CHK	TITLE DAVOS-DF DDR TERMINAL RESISTORS					Size A3
DOC CTRL CHK						
MFG ENGR CHK						
Changed by DAVOS	Date Changed 4-Nov-2004	Time Changed 6:51:20 pm	QA CHK	VER A01	Model Number PC9603	Sheet 29 of 65

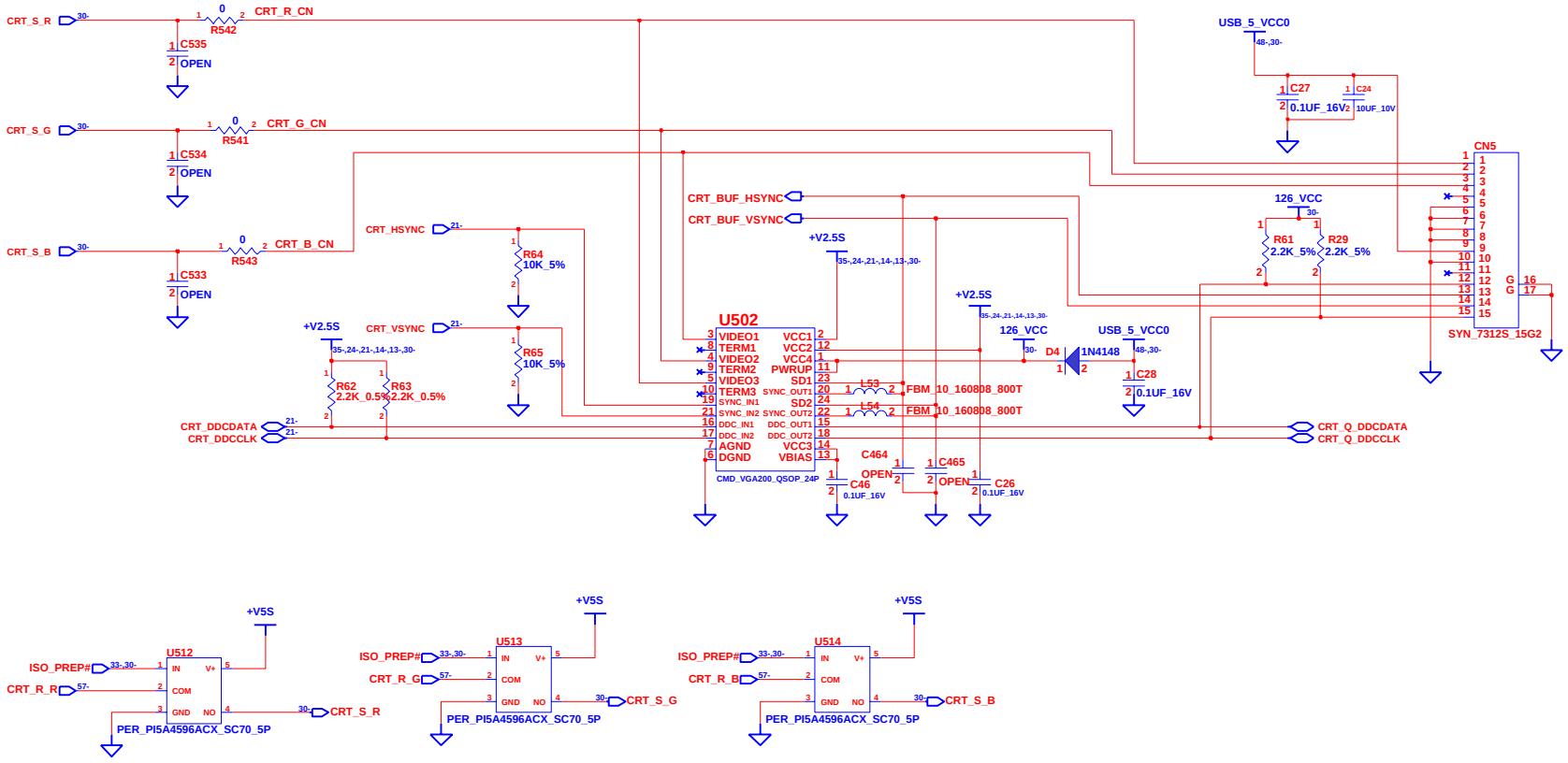

CHANGE by	Kevin_Tseng	4-Nov-2004	

INVENTEC

TITLE **DAVOS-DF**
CRT

SIZE	CODE	DOC. NUMBER	REV
A3	CS	PC9603	A01

SHEET 30 OF 65

Place closed to connector

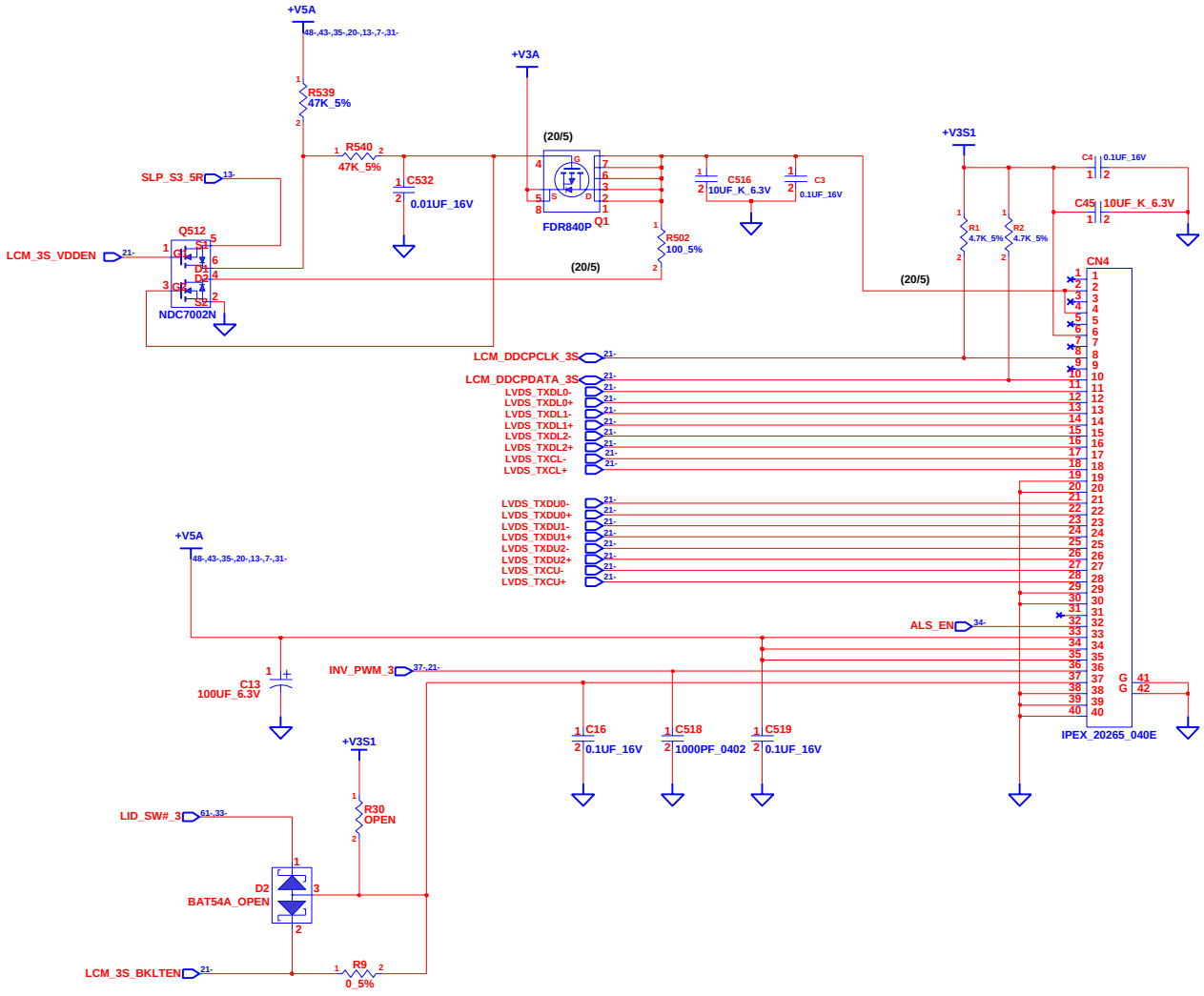

INVENTEC			
TITLE DAVOS-DF LCD CONN			
SIZE A3	CODE CS	DOC. NUMBER PC9603	REV A01
CHANGE by Kevin_Tseng	4-Nov-2004	SHEET 31 OF 65	

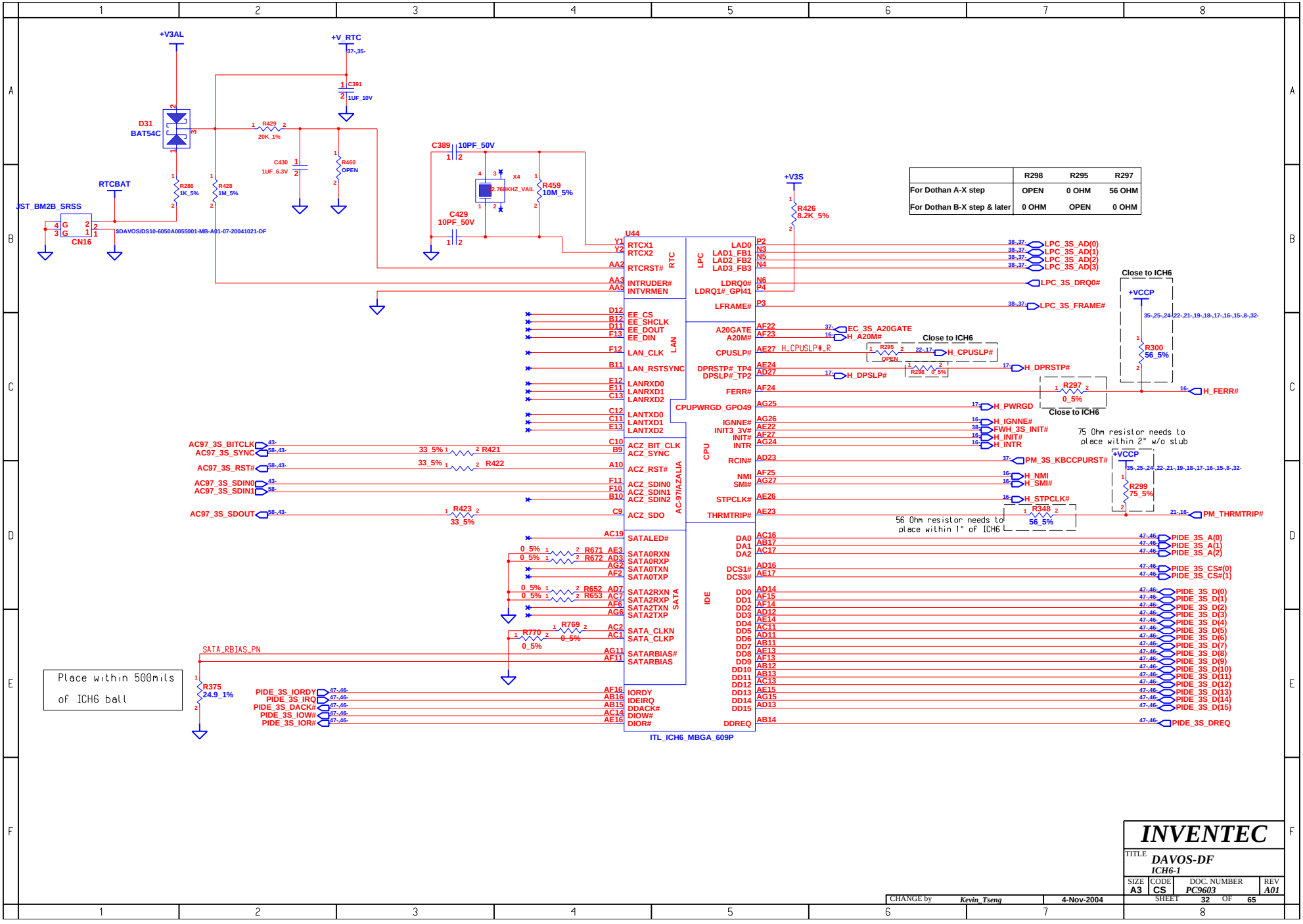

	R298	R295	R297
For Dothan A-X step	OPEN	0 OHM	56 OHM
For Dothan B-X step & later	0 OHM	OPEN	0 OHM

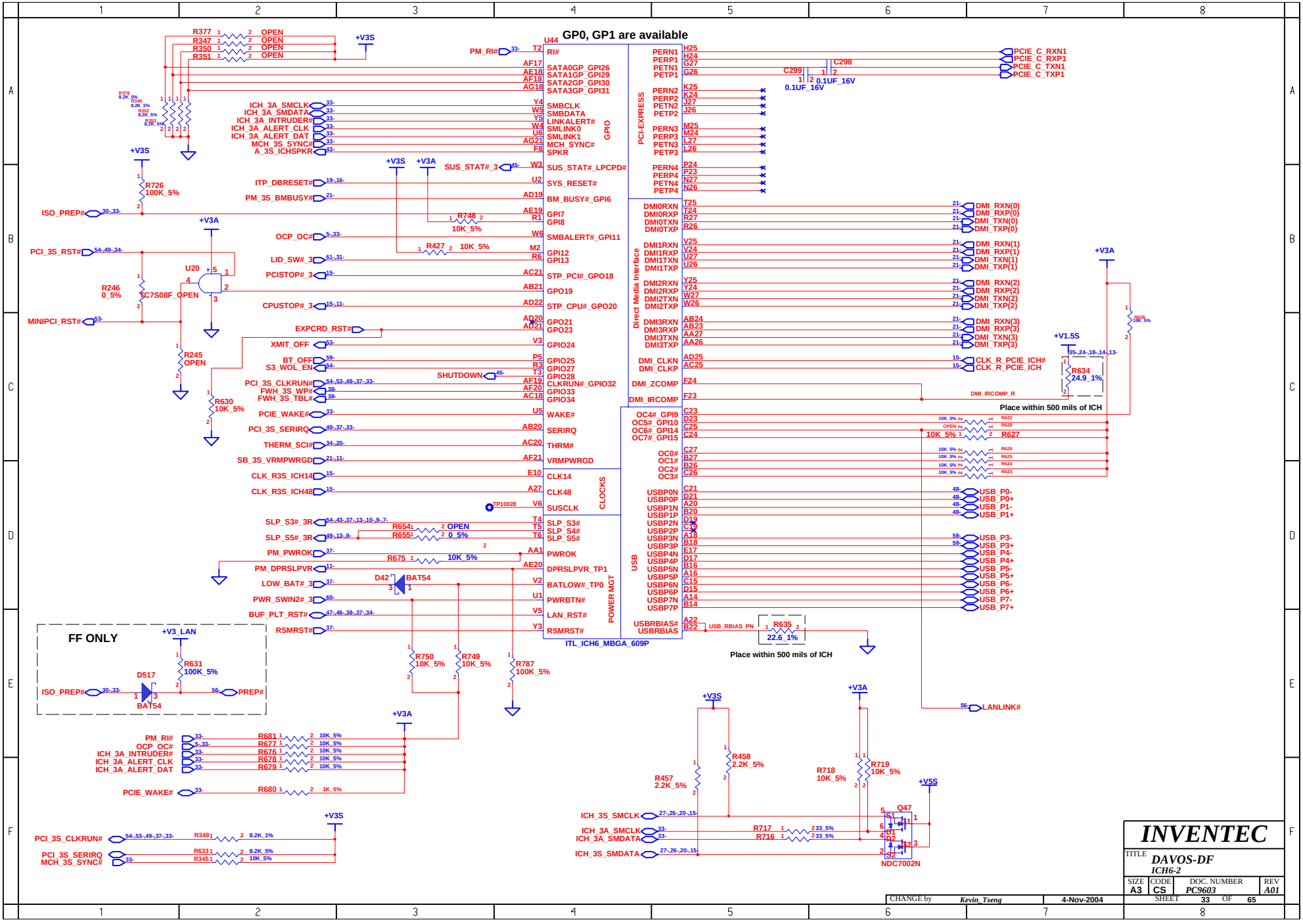
GP0, GP1 are available
U44
ITL_ICH6_MBGA_609P
GPIO
PCI-EXPRESS
Direct Media Interface
CLOCKS
USB
POWER MGT
PCIE_C_RXN1
PCIE_C_RXP1
PCIE_C_TXN1
PCIE_C_TXP1
DMI_RXN(0)
DMI_RXP(0)
DMI_TXN(0)
DMI_TXP(0)
DMI_RXN(1)
DMI_RXP(1)
DMI_TXN(1)
DMI_TXP(1)
DMI_RXN(2)
DMI_RXP(2)
DMI_TXN(2)
DMI_TXP(2)
DMI_RXN(3)
DMI_RXP(3)
DMI_TXN(3)
DMI_TXP(3)
CLK_R_PCIE_ICH#
CLK_R_PCIE_ICH
USB_P0-
USB_P0+
USB_P1-
USB_P1+
USB_P3-
USB_P3+
USB_P4-
USB_P4+
USB_P5-
USB_P5+
USB_P6-
USB_P6+
USB_P7-
USB_P7+
LANLINK#
Place within 500 mils of ICH
Place within 500 mils of ICH
FF ONLY
Q47
NDC7002N
INVENTEC
TITLE
DAVOS-DF
ICH6-2
SIZE A3
CODE CS
DOC. NUMBER PC9603
REV A01
SHEET 33 OF 65
CHANGE by Kevin_Tseng
4-Nov-2004

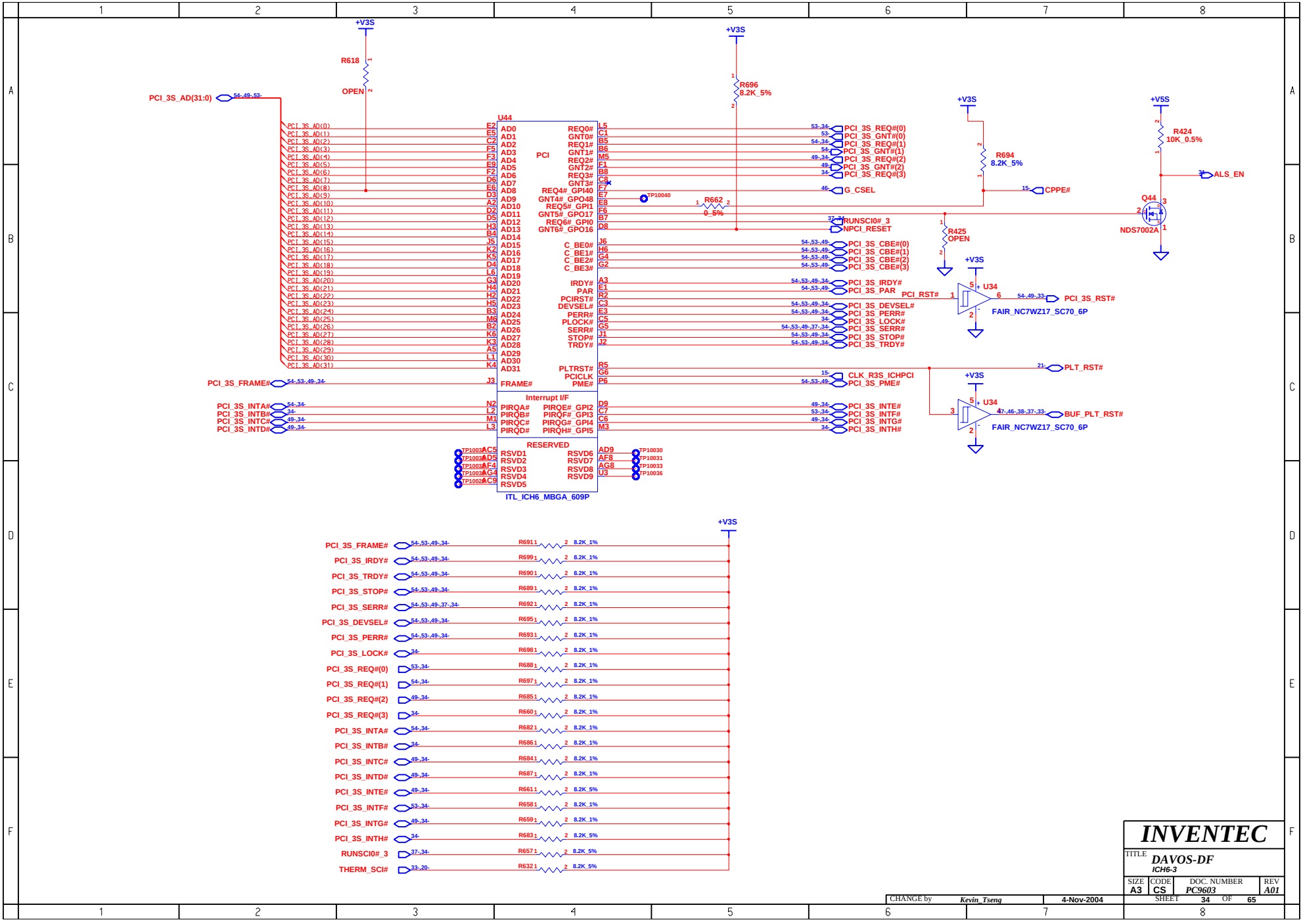

CHANGE by	Kevin_Tseng	4-Nov-2004

INVENTEC

TITLE: DAVOS-DF
ICH6-3

SIZE	CODE	DOC. NUMBER	REV
A3	CS	PC9603	A01

SHEET 34 OF 65

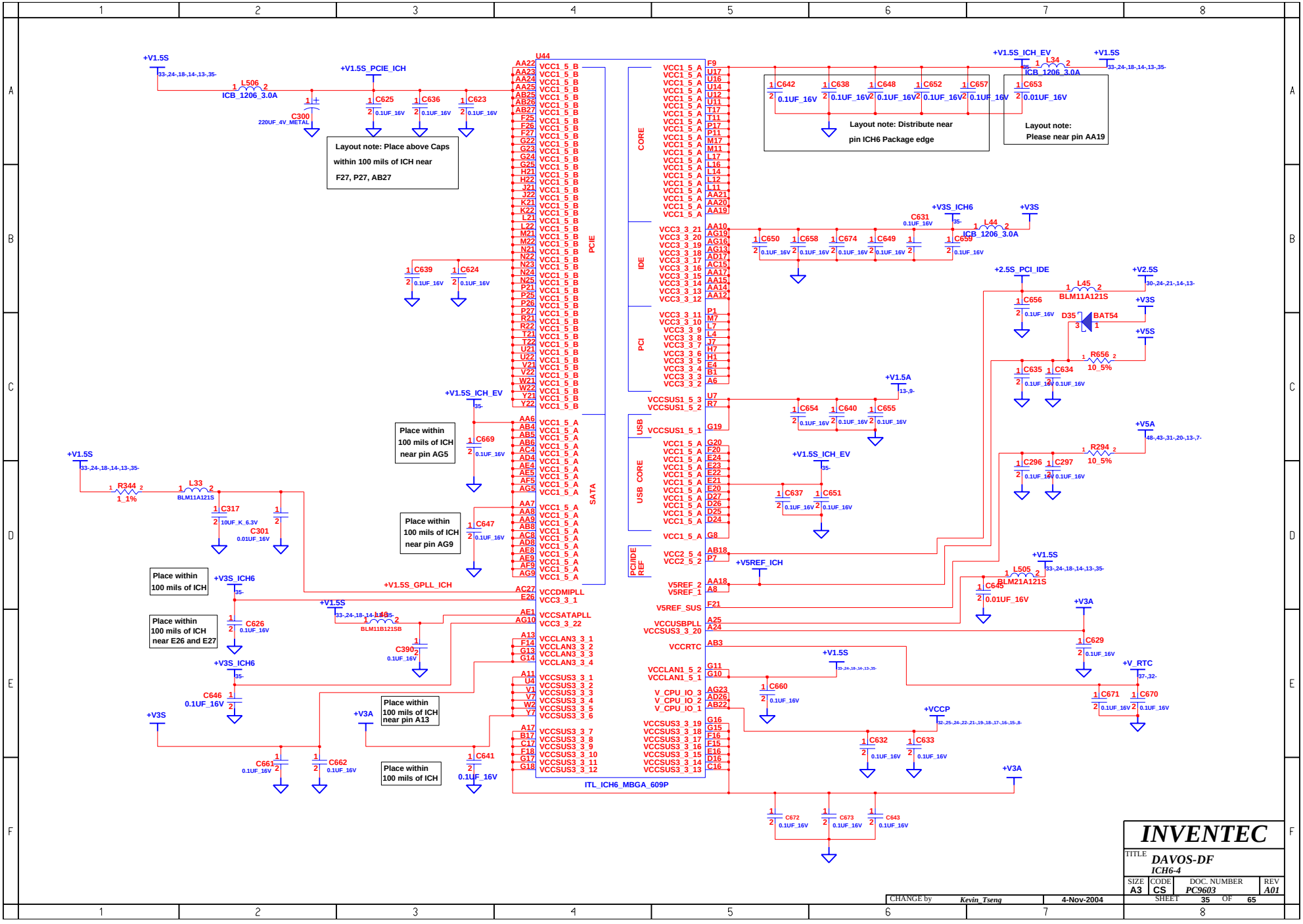
U44
ITL_ICH6_MBGA_609P
PCIE
SATA
CORE
IDE
PCI
USB
USB CORE
PCI/IDE REF
+V1.5S
+V1.5S_PCIE_ICH
+V1.5S_ICH_EV
+V3S_ICH6
+V3S
+2.5S_PCI_IDE
+V2.5S
+V5S
+V5A
+V1.5A
+V5REF_ICH
+V1.5S_GPLL_ICH
+V3A
+V_RTC
+VCCP
L506 ICB_1206_3.0A
L34 ICB_1206_3.0A
L44 ICB_1206_3.0A
L45 BLM11A121S
L33 BLM11A121S
L505 BLM21A121S
L43 BLM11B121SB
C300 220UF_4V_METAL
D35 BAT54
R656 10_5%
R294 10_5%
R344 1_1%
Layout note: Place above Caps within 100 mils of ICH near F27, P27, AB27
Layout note: Distribute near pin ICH6 Package edge
Layout note: Please near pin AA19
Place within 100 mils of ICH near pin AG5
Place within 100 mils of ICH near pin AG9
Place within 100 mils of ICH
Place within 100 mils of ICH near E26 and E27
Place within 100 mils of ICH near pin A13
Place within 100 mils of ICH
INVENTEC
TITLE DAVOS-DF
ICH6-4
SIZE A3
CODE CS
DOC. NUMBER PC9603
REV A01
SHEET 35 OF 65
CHANGE by Kevin_Tseng
4-Nov-2004

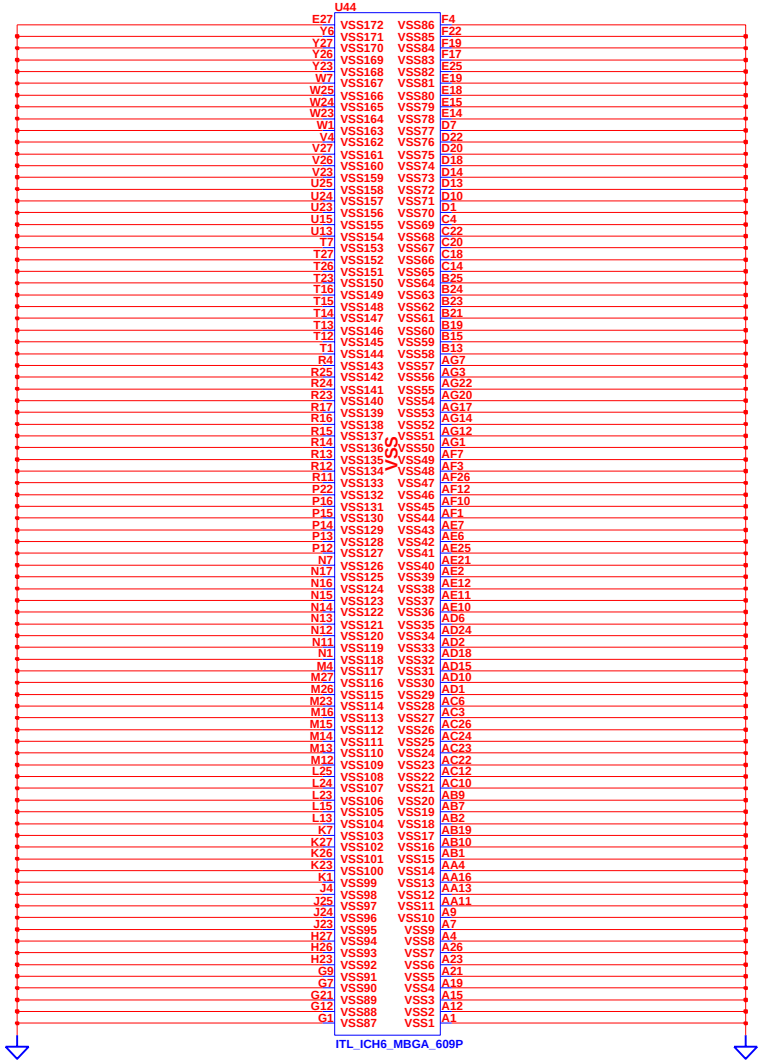

CHANGE by	Kevin_Tseng	4-Nov-2004	

INVENTEC

TITLE **DAVOS-DF**
ICH6-5

SIZE	CODE	DOC. NUMBER	REV
A3	CS	PC9603	A01

SHEET 36 OF 65

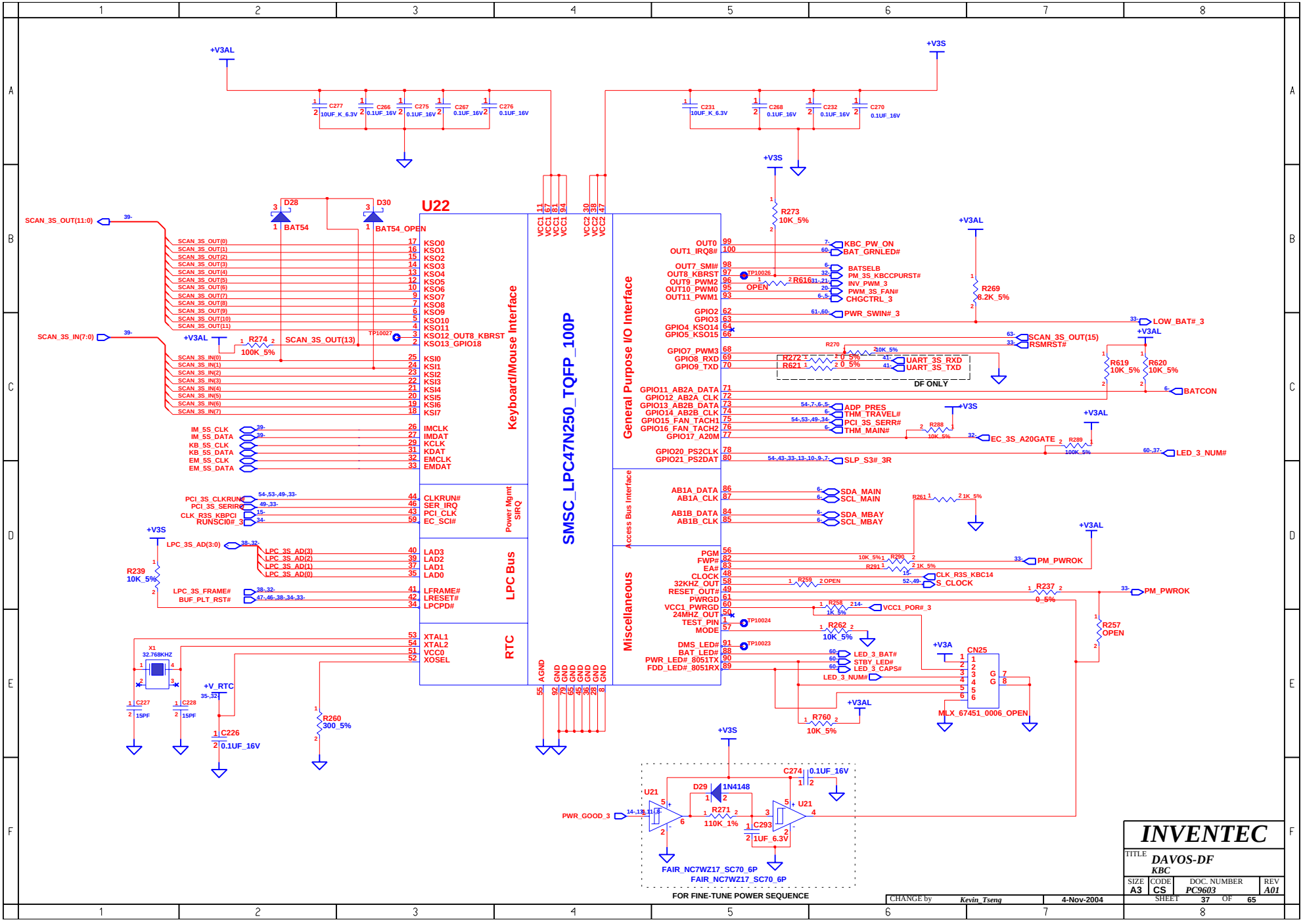
U22
SMSC_LPC47N250_TQFP_100P
Keyboard/Mouse Interface
Power Mgmt SIRQ
LPC Bus
RTC
General Purpose I/O Interface
Access Bus Interface
Miscellaneous
+V3AL
+V3S
+V_RTC
+V3A
SCAN_3S_OUT(11:0)
SCAN_3S_IN(7:0)
SCAN_3S_OUT(13)
KBC_PW_ON
BAT_GRNLED#
BATSELB
PM_3S_KBCCPURST#
INV_PWM_3
PWM_3S_FAN#
CHGCTRL_3
PWR_SWIN#_3
LOW_BAT#_3
SCAN_3S_OUT(15)
RSMRST#
UART_3S_RXD
UART_3S_TXD
DF ONLY
BATCON
ADP_PRES
THM_TRAVEL#
PCI_3S_SERR#
THM_MAIN#
EC_3S_A20GATE
LED_3_NUM#
SLP_S3#_3R
SDA_MAIN
SCL_MAIN
SDA_MBAY
SCL_MBAY
PM_PWROK
CLK_R3S_KBC14
S_CLOCK
VCC1_POR#_3
LED_3_BAT#
STBY_LED#
LED_3_CAPS#
LED_3_NUM#
MLX_67451_0006_OPEN
PWR_GOOD_3
FAIR_NC7WZ17_SC70_6P
FOR FINE-TUNE POWER SEQUENCE
IM_5S_CLK
IM_5S_DATA
KB_5S_CLK
KB_5S_DATA
EM_5S_CLK
EM_5S_DATA
PCI_3S_CLKRUN
PCI_3S_SERIRQ
CLK_R3S_KBPCI
RUNSCI0#_3
LPC_3S_AD(3:0)
LPC_3S_FRAME#
BUF_PLT_RST#
X1 32.768KHZ
INVENTEC
TITLE DAVOS-DF
KBC
SIZE A3
CODE CS
DOC. NUMBER PC9603
REV A01
SHEET 37 OF 65
CHANGE by Kevin_Tseng
4-Nov-2004

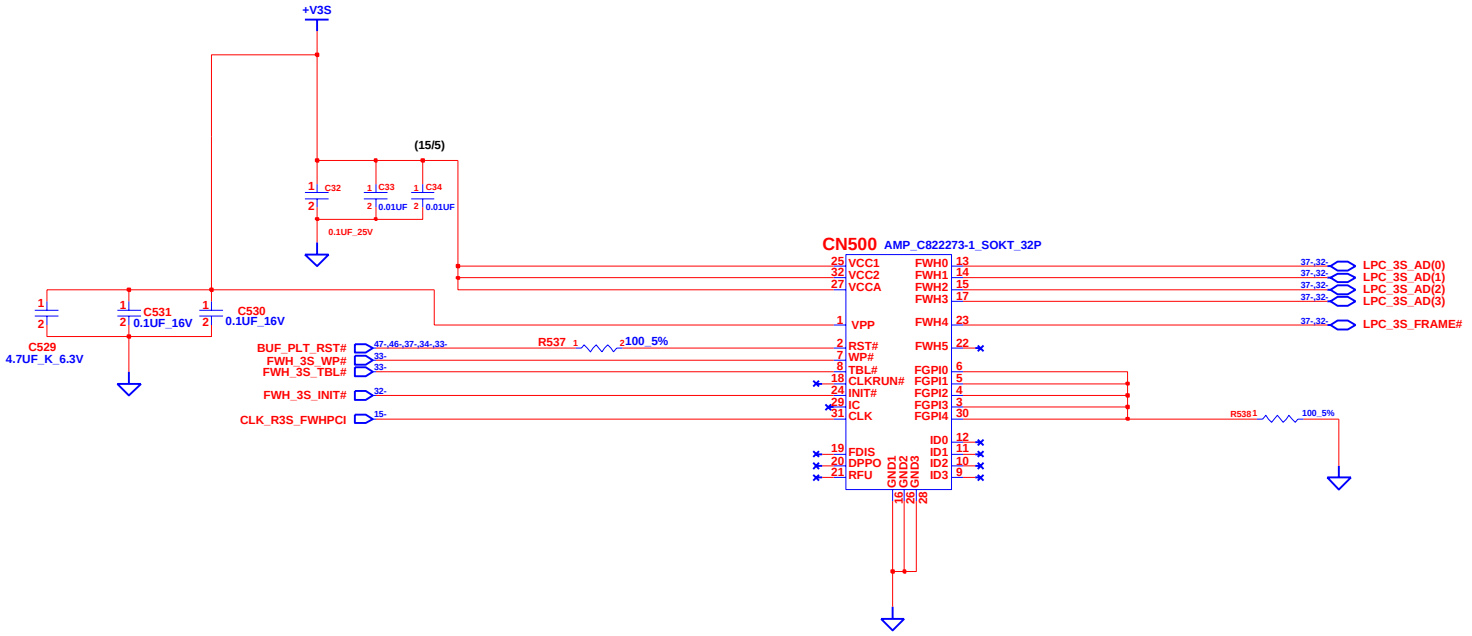

INVENTEC

TITLE **DAVOS-DF**
FWH

SIZE	CODE	DOC. NUMBER	REV
A3	CS	PC9603	A01

SHEET 38 OF 65

CHANGE by Kevin_Tseng 4-Nov-2004

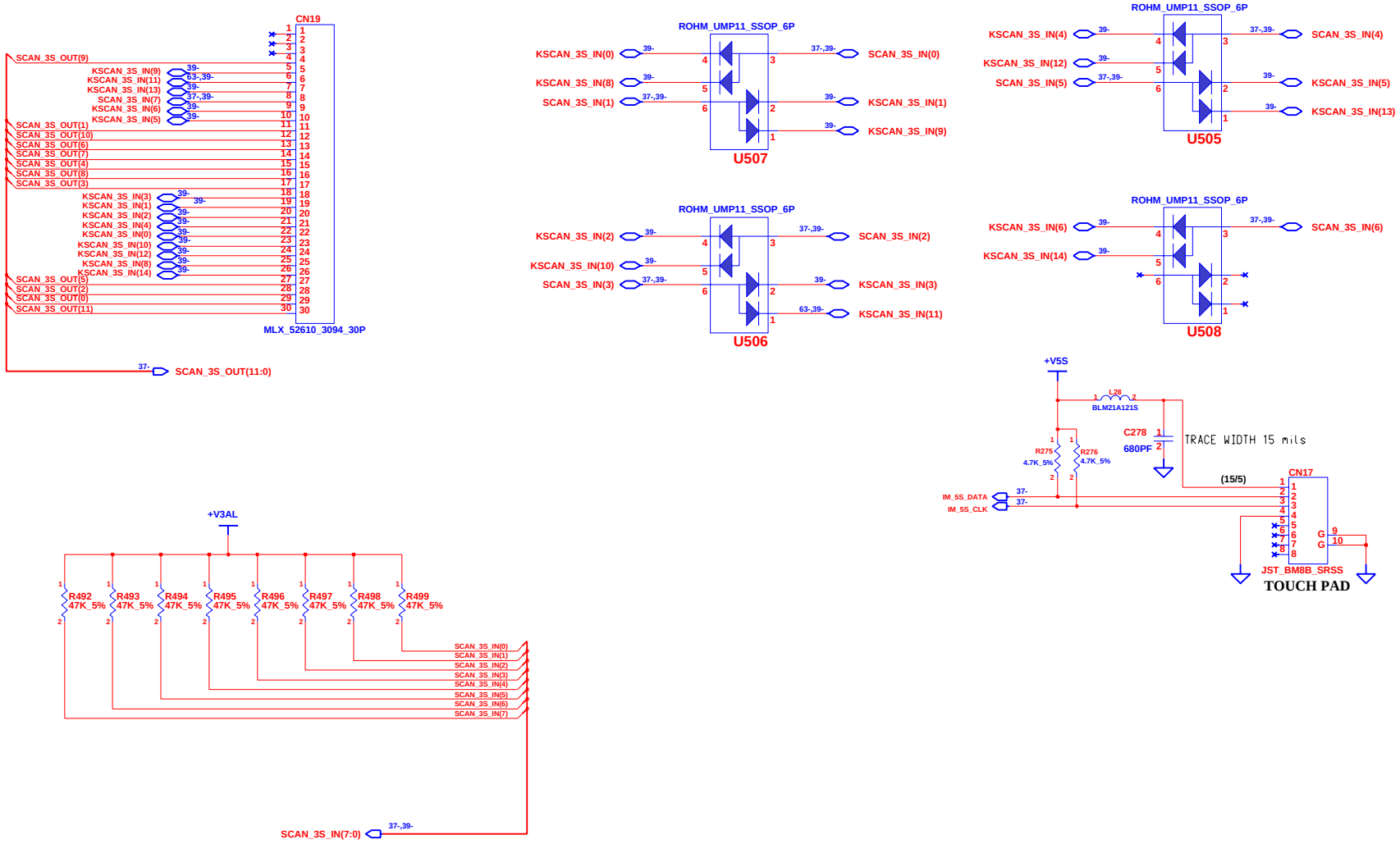

CHANGE by	Kevin_Tseng	4-Nov-2004	

INVENTEC

TITLE **DAVOS-DF**
INT. KB CONN & TOUCHPAD

SIZE	CODE	DOC. NUMBER	REV
A3	CS	PC9603	A01

SHEET 39 OF 65

For FF only

INVENTEC					
TITLE	DAVOS-DF SUPER I/O				
SIZE	CODE	DOC. NUMBER		REV	
A3	CS	PC9603		A01	
CHANGE by	Kevin_Tseng	4-Nov-2004	SHEET	40	OF 65

DF debug only

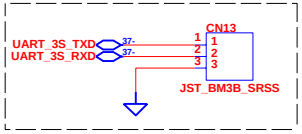

CHANGE by	Kevin_Tseng	4-Nov-2004	

INVENTEC

TITLE *DAVOS-DF*
DF debug only

SIZE	CODE	DOC. NUMBER	REV
A3	CS	PC9603	A01

SHEET 41 OF 65

For FF only

CHANGE by	Kevin_Tseng	4-Nov-2004		

INVENTEC

TITLE *DAVOS-DF*
PARALLER PORT

SIZE	CODE	DOC. NUMBER	REV
A3	CS	*PC9603*	*A01*

SHEET 42 OF 65

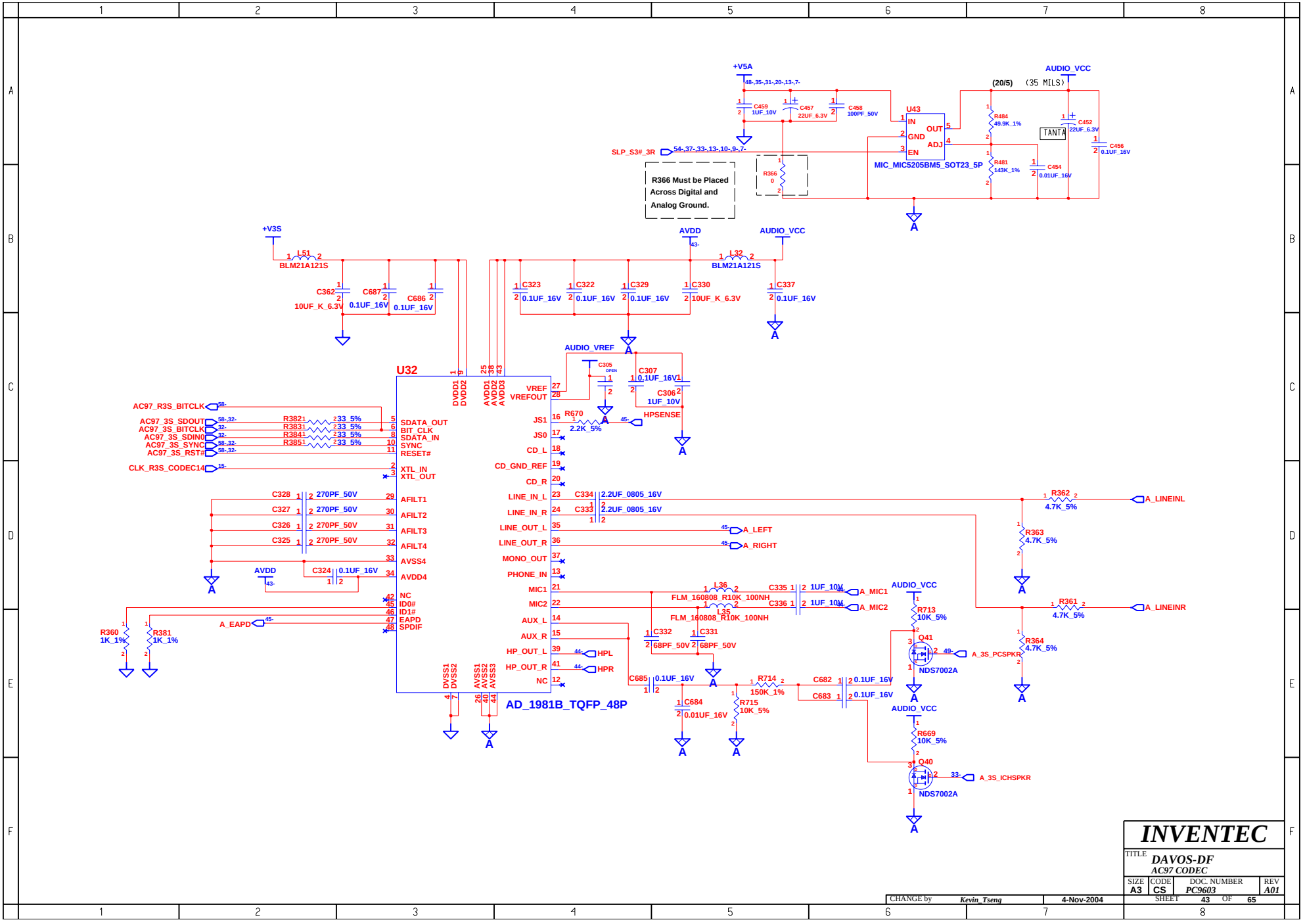
+V5A
AUDIO_VCC
U43
IN
OUT
GND
ADJ
EN
MIC_MIC5205BM5_SOT23_5P
SLP_S3#_3R
R366 Must be Placed Across Digital and Analog Ground.
R366 0
C459 1UF_10V
C457 22UF_6.3V
C458 100PF_50V
R484 49.9K_1%
R481 143K_1%
C452 22UF_6.3V
TANTA
C454 0.01UF_16V
C456 0.1UF_16V
(20/5) (35 MILS)
+V3S
L51 BLM21A121S
L32 BLM21A121S
AVDD
C362 10UF_K_6.3V
C687 0.1UF_16V
C686 0.1UF_16V
C323 0.1UF_16V
C322 0.1UF_16V
C329 0.1UF_16V
C330 10UF_K_6.3V
C337 0.1UF_16V
AUDIO_VREF
C305 OPEN
C307 0.1UF_16V
C306 1UF_10V
HPSENSE
U32
DVDD1 DVDD2
AVDD1 AVDD2 AVDD3
VREF
VREFOUT
JS1
JS0
CD_L
CD_GND_REF
CD_R
LINE_IN_L
LINE_IN_R
LINE_OUT_L
LINE_OUT_R
MONO_OUT
PHONE_IN
MIC1
MIC2
AUX_L
AUX_R
HP_OUT_L
HP_OUT_R
NC
SDATA_OUT
BIT_CLK
SDATA_IN
SYNC
RESET#
XTL_IN
XTL_OUT
AFILT1
AFILT2
AFILT3
AFILT4
AVSS4
AVDD4
NC
ID0#
ID1#
EAPD
SPDIF
DVSS1 DVSS2
AVSS1 AVSS2 AVSS3
AD_1981B_TQFP_48P
AC97_R3S_BITCLK
AC97_3S_SDOUT
AC97_3S_BITCLK
AC97_3S_SDIN0
AC97_3S_SYNC
AC97_3S_RST#
CLK_R3S_CODEC14
R382 33_5%
R383 33_5%
R384 33_5%
R385 33_5%
R670 2.2K_5%
C328 270PF_50V
C327 270PF_50V
C326 270PF_50V
C325 270PF_50V
C324 0.1UF_16V
A_EAPD
R360 1K_1%
R381 1K_1%
C334 2.2UF_0805_16V
C333 2.2UF_0805_16V
A_LEFT
A_RIGHT
R362 4.7K_5%
R363 4.7K_5%
R361 4.7K_5%
R364 4.7K_5%
A_LINEINL
A_LINEINR
L36 FLM_160808_R10K_100NH
L35 FLM_160808_R10K_100NH
C335 1UF_10V
C336 1UF_10V
A_MIC1
A_MIC2
C332 68PF_50V
C331 68PF_50V
HPL
HPR
C685 0.1UF_16V
C684 0.01UF_16V
R714 150K_1%
R715 10K_5%
C682 0.1UF_16V
C683 0.1UF_16V
R713 10K_5%
Q41 NDS7002A
A_3S_PCSPKR
R669 10K_5%
Q40 NDS7002A
A_3S_ICHSPKR
INVENTEC
TITLE DAVOS-DF
AC97 CODEC
SIZE A3
CODE CS
DOC. NUMBER PC9603
REV A01
SHEET 43 OF 65
CHANGE by Kevin_Tseng
4-Nov-2004

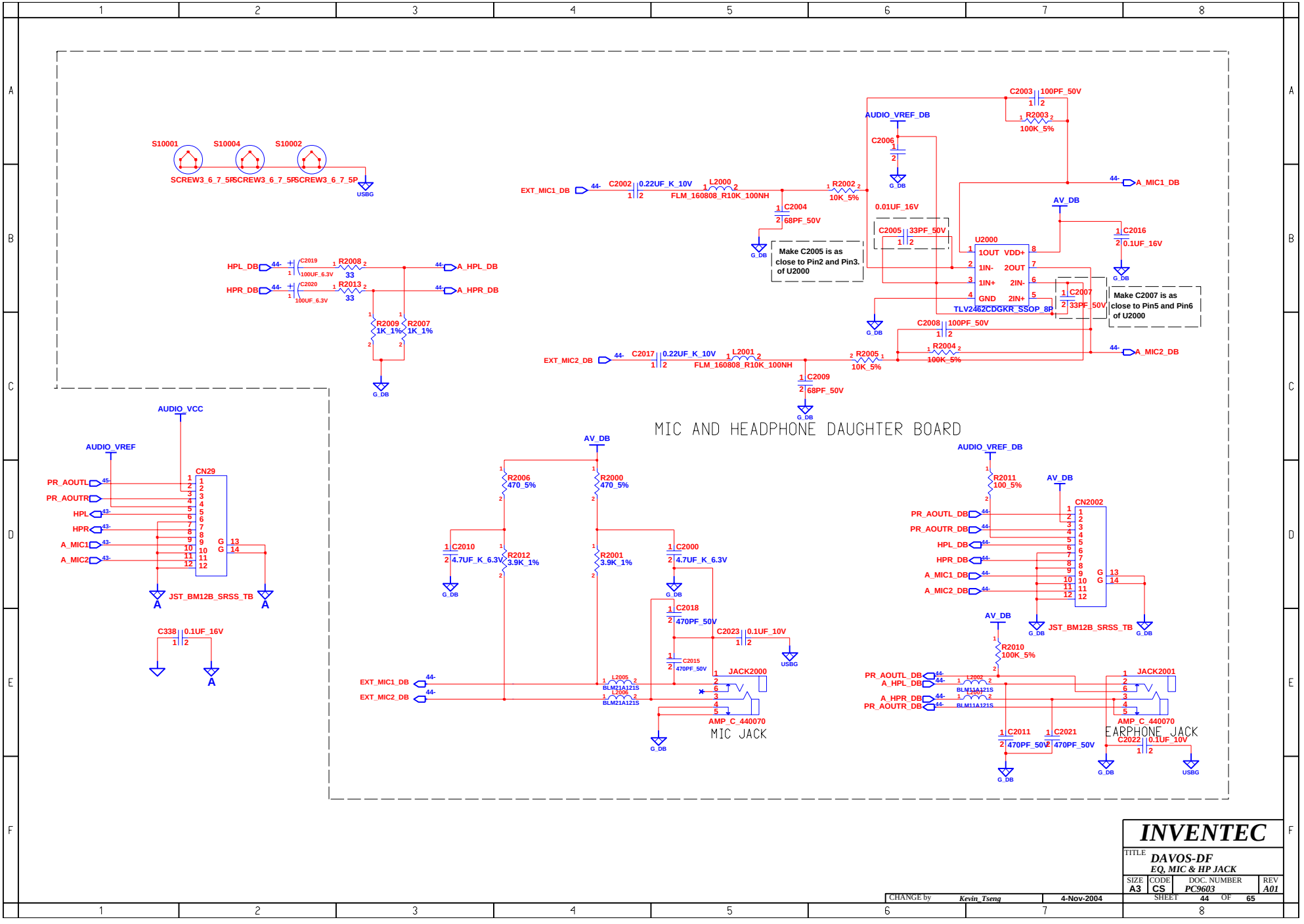

INVENTEC	
TITLE	DAVOS-DF EQ, MIC & HP JACK
SIZE A3	CODE CS
DOC. NUMBER	PC9603
REV	A01
CHANGE by	Kevin_Tseng
4-Nov-2004	
SHEET 44 OF 65	

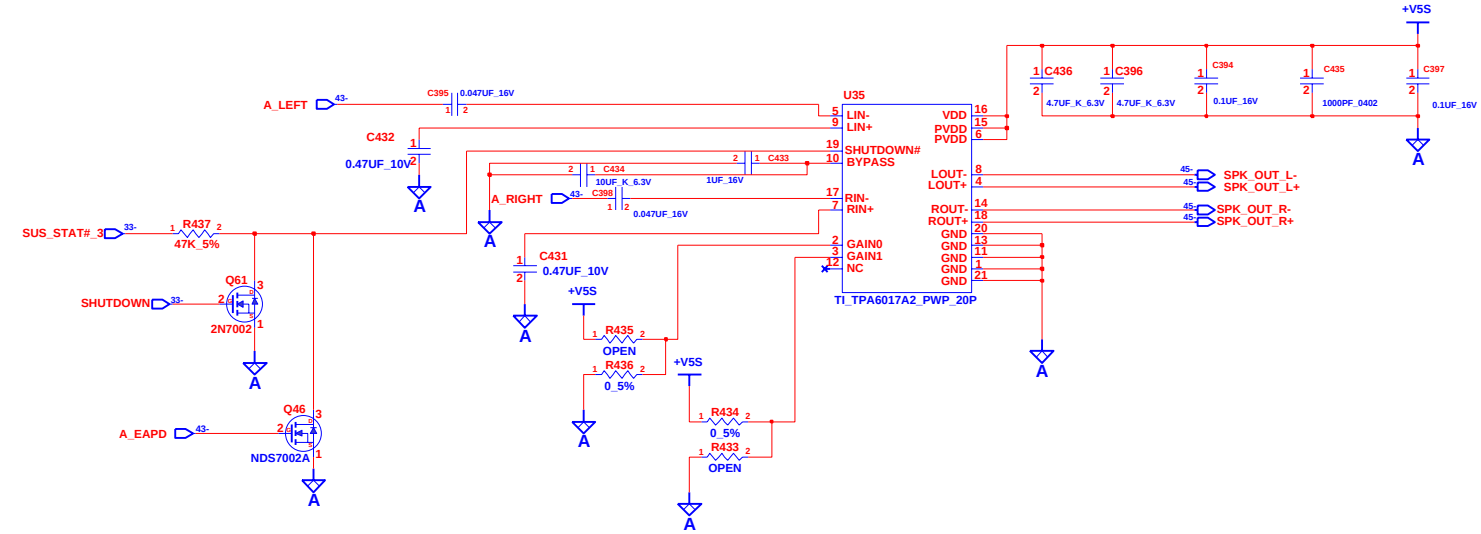

INTERNAL SPEAKER

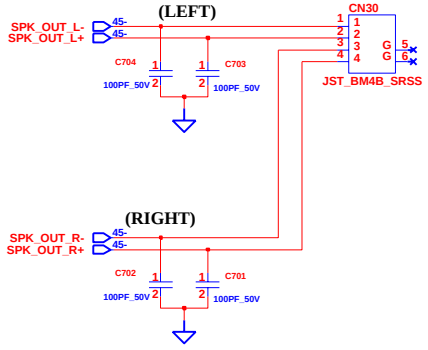

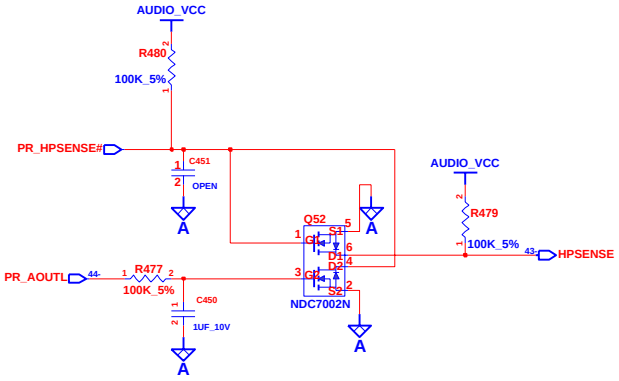

CHANGE by	Kevin_Tseng	4-Nov-2004	

INVENTEC

TITLE: *DAVOS-DF*
AUDIO AMP

SIZE	CODE	DOC. NUMBER	REV
A3	CS	PC9603	A01

SHEET 45 OF 65

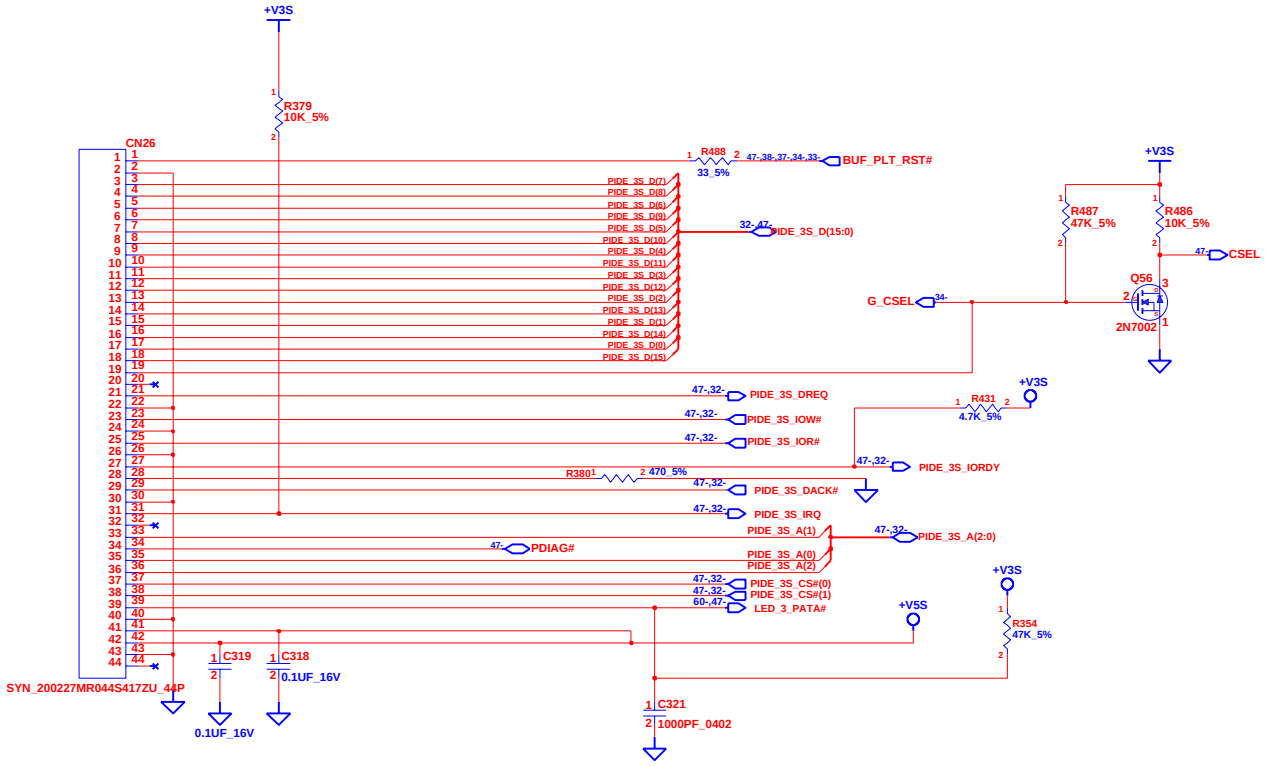

INVENTEC

TITLE **DAVOS-DF**
SATA/PATA HDD CONN

SIZE	CODE	DOC. NUMBER	REV
A3	CS	PC9603	A01

CHANGE by Kevin_Tseng 4-Nov-2004

SHEET 46 OF 65

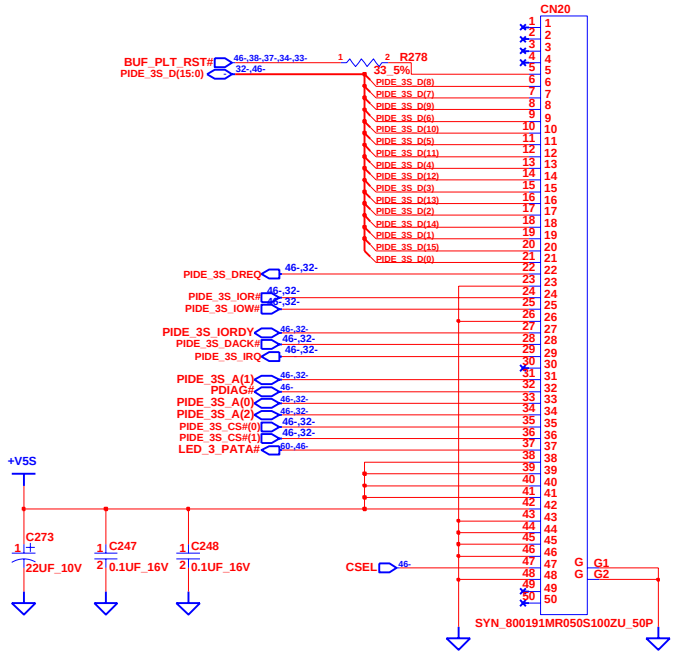

INVENTEC

TITLE DAVOS-DF
OPTICAL DRIVE CONN

SIZE	CODE	DOC. NUMBER	REV
A3	CS	PC9603	A01

CHANGE by Kevin_Tseng 4-Nov-2004

SHEET 47 OF 65

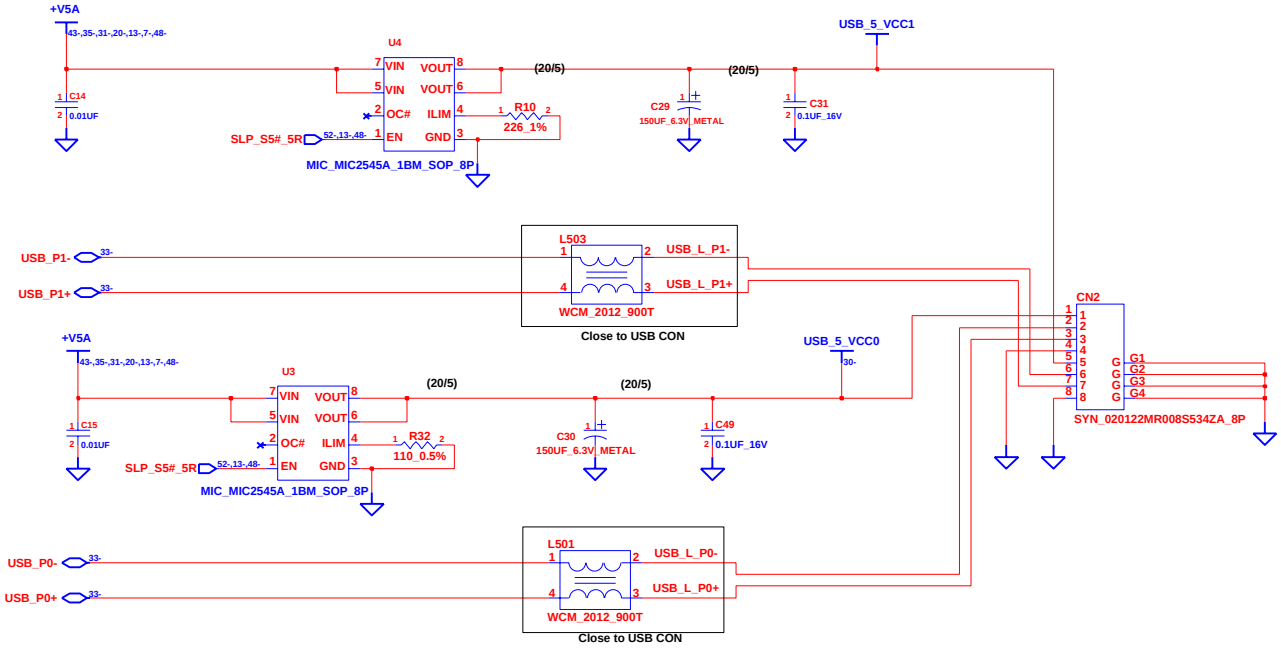

INVENTEC

TITLE **DAVOS-DF**
USB CONN

SIZE	CODE	DOC. NUMBER	REV
A3	CS	PC9603	A01

SHEET 48 OF 65

CHANGE by	Kevin_Tseng	4-Nov-2004

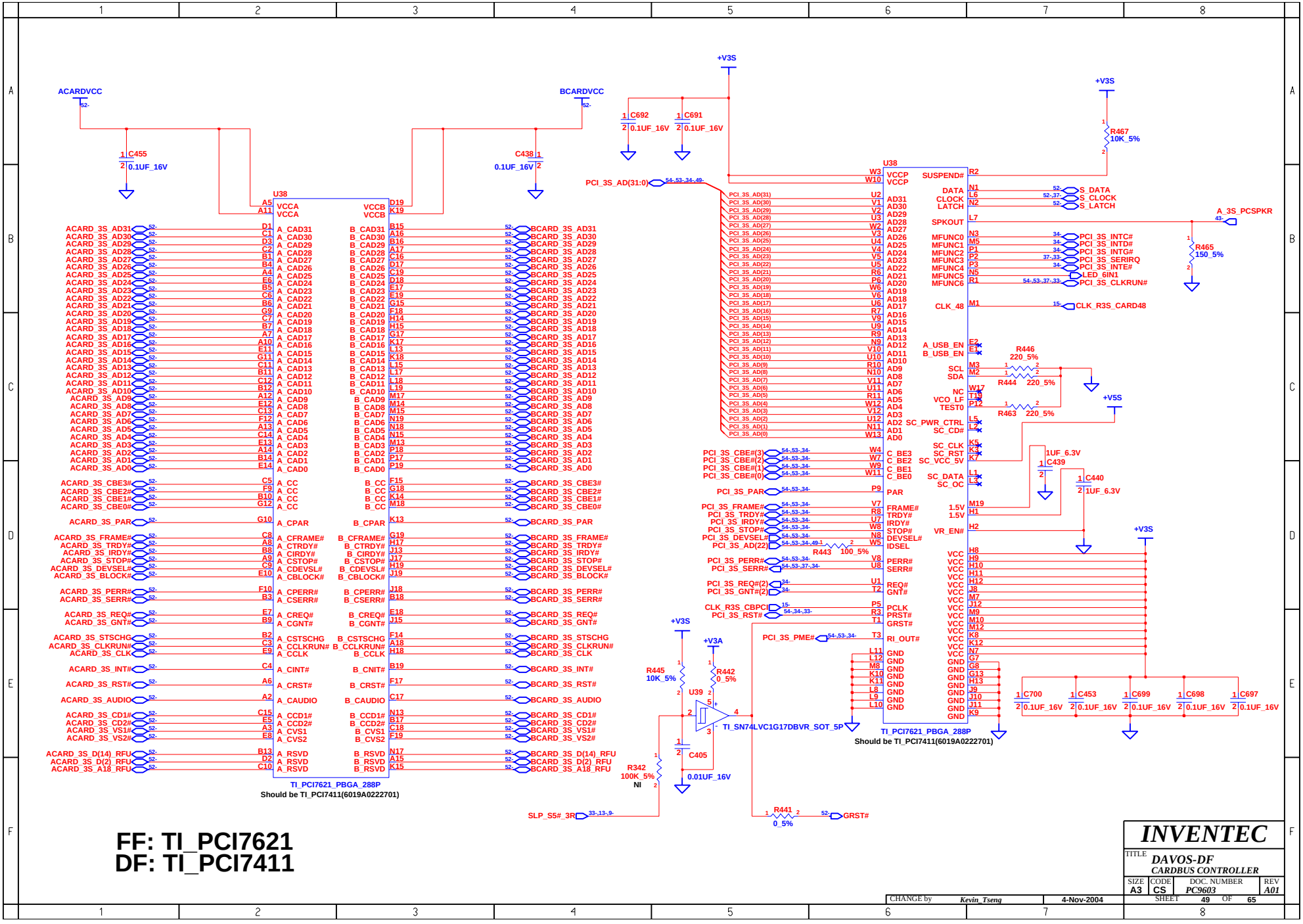
ACARDVCC
BCARDVCC
+V3S
C455 0.1UF_16V
C438 0.1UF_16V
C692 0.1UF_16V
C691 0.1UF_16V
R467 10K_5%
R465 150_5%
R446 220_5%
R444 220_5%
R463 220_5%
R443 100_5%
R445 10K_5%
R442 0_5%
R342 100K_5% NI
C405 0.01UF_16V
R441 0_5%
C439 1UF_6.3V
C440 1UF_6.3V
C700 0.1UF_16V
C453 0.1UF_16V
C699 0.1UF_16V
C698 0.1UF_16V
C697 0.1UF_16V
U38
TI_PCI7621_PBGA_288P
Should be TI_PCI7411(6019A0222701)
U39
TI_SN74LVC1G17DBVR_SOT_5P
PCI_3S_AD(31:0)
A_3S_PCSPKR
S_DATA
S_CLOCK
S_LATCH
PCI_3S_INTC#
PCI_3S_INTD#
PCI_3S_INTG#
PCI_3S_SERIRQ
PCI_3S_INTE#
LED_6IN1
PCI_3S_CLKRUN#
CLK_R3S_CARD48
+V5S
GRST#
SLP_S5#_3R
FF: TI_PCI7621
DF: TI_PCI7411
INVENTEC
TITLE DAVOS-DF
CARDBUS CONTROLLER
SIZE A3
CODE CS
DOC. NUMBER PC9603
REV A01
CHANGE by Kevin_Tseng
4-Nov-2004
SHEET 49 OF 65

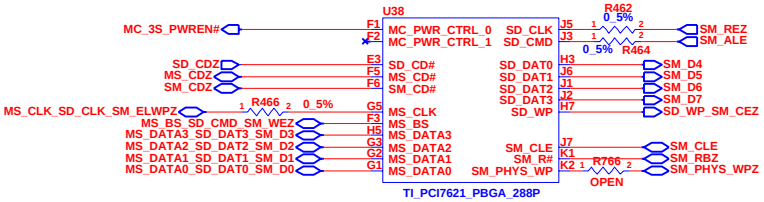

Should be TI_PCI7411(6019A0222701)

6 in 1 for FF only

CHANGE by	*Kevin_Tseng*	4-Nov-2004	

INVENTEC

TITLE *DAVOS-DF*
6 IN 1 SLOT

SIZE	CODE	DOC. NUMBER	REV
A3	CS	*PC9603*	*A01*

SHEET 50 OF 65

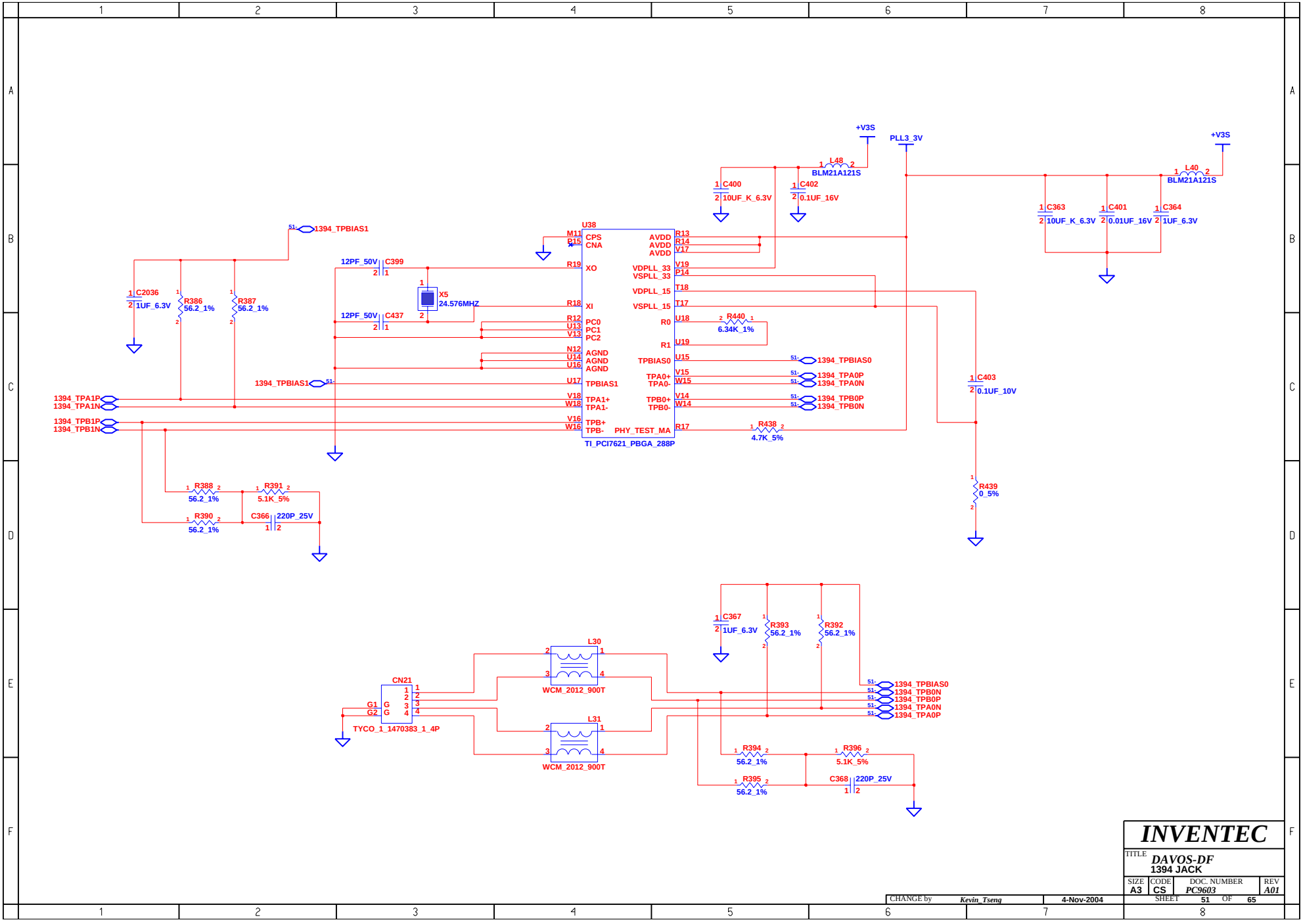

CHANGE by	Kevin_Tseng	4-Nov-2004	

INVENTEC

TITLE: DAVOS-DF
1394 JACK

SIZE	CODE	DOC. NUMBER	REV
A3	CS	PC9603	A01

SHEET 51 OF 65

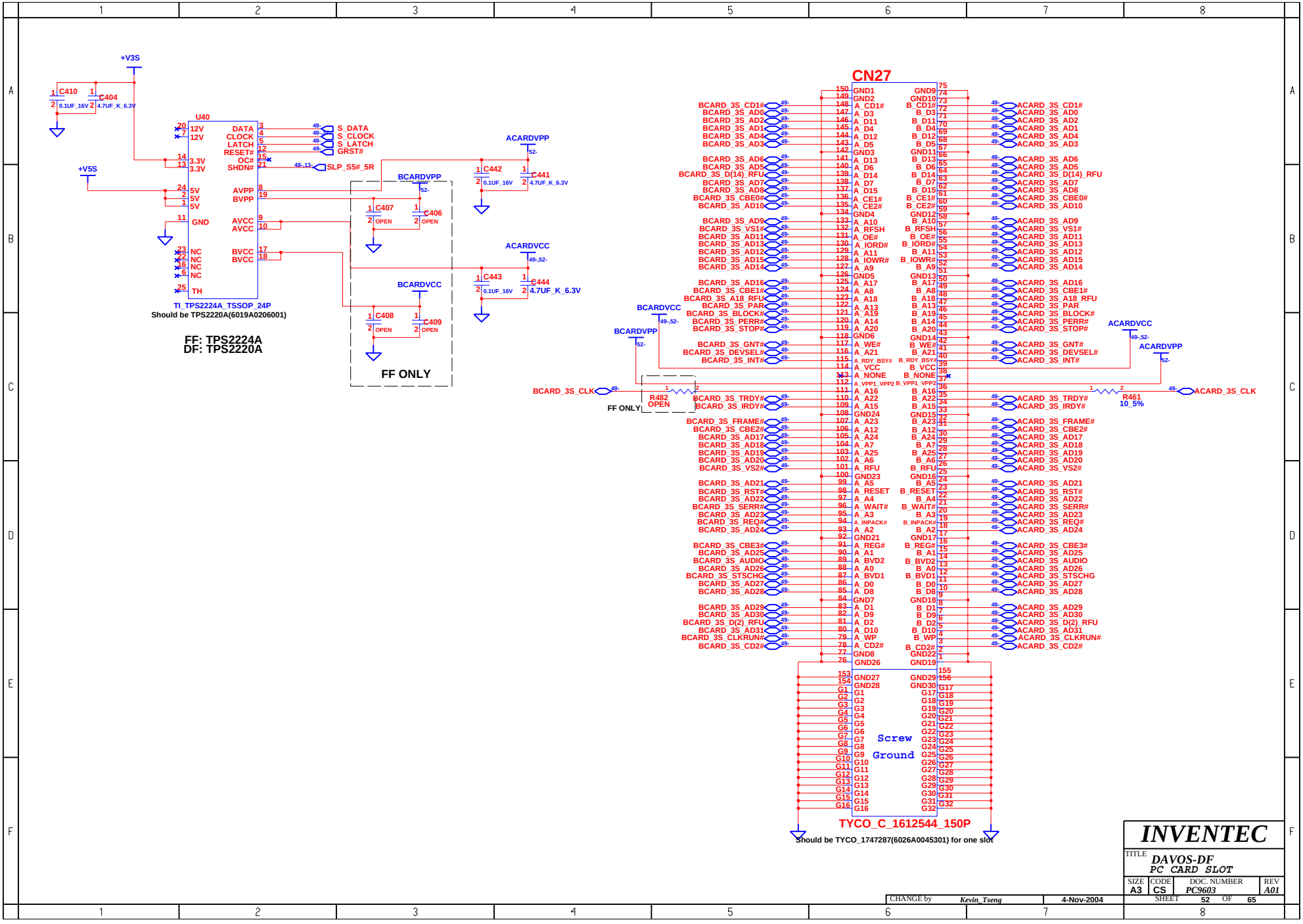
+V3S
C410 0.1UF_16V
C404 4.7UF_K_6.3V
+V5S
U40
12V
12V
3.3V
3.3V
5V
5V
5V
GND
NC
NC
NC
NC
TH
DATA
CLOCK
LATCH
RESET#
OC#
SHDN#
AVPP
BVPP
AVCC
AVCC
BVCC
BVCC
S_DATA
S_CLOCK
S_LATCH
GRST#
SLP_S5#_5R
TI_TPS2224A_TSSOP_24P
Should be TPS2220A(6019A0206001)
FF: TPS2224A
DF: TPS2220A
BCARDVPP
BCARDVCC
C407 OPEN
C406 OPEN
C408 OPEN
C409 OPEN
FF ONLY
ACARDVPP
ACARDVCC
C442 0.1UF_16V
C441 4.7UF_K_6.3V
C443 0.1UF_16V
C444 4.7UF_K_6.3V
CN27
BCARD_3S_CD1#
BCARD_3S_AD0
BCARD_3S_AD2
BCARD_3S_AD1
BCARD_3S_AD4
BCARD_3S_AD3
BCARD_3S_AD6
BCARD_3S_AD5
BCARD_3S_D(14)_RFU
BCARD_3S_AD7
BCARD_3S_AD8
BCARD_3S_CBE0#
BCARD_3S_AD10
BCARD_3S_AD9
BCARD_3S_VS1#
BCARD_3S_AD11
BCARD_3S_AD13
BCARD_3S_AD12
BCARD_3S_AD15
BCARD_3S_AD14
BCARD_3S_AD16
BCARD_3S_CBE1#
BCARD_3S_A18_RFU
BCARD_3S_PAR
BCARD_3S_BLOCK#
BCARD_3S_PERR#
BCARD_3S_STOP#
BCARD_3S_GNT#
BCARD_3S_DEVSEL#
BCARD_3S_INT#
BCARD_3S_CLK
R482 OPEN
BCARD_3S_TRDY#
BCARD_3S_IRDY#
BCARD_3S_FRAME#
BCARD_3S_CBE2#
BCARD_3S_AD17
BCARD_3S_AD18
BCARD_3S_AD19
BCARD_3S_AD20
BCARD_3S_VS2#
BCARD_3S_AD21
BCARD_3S_RST#
BCARD_3S_AD22
BCARD_3S_SERR#
BCARD_3S_AD23
BCARD_3S_REQ#
BCARD_3S_AD24
BCARD_3S_CBE3#
BCARD_3S_AD25
BCARD_3S_AUDIO
BCARD_3S_AD26
BCARD_3S_STSCHG
BCARD_3S_AD27
BCARD_3S_AD28
BCARD_3S_AD29
BCARD_3S_AD30
BCARD_3S_D(2)_RFU
BCARD_3S_AD31
BCARD_3S_CLKRUN#
BCARD_3S_CD2#
ACARD_3S_CD1#
ACARD_3S_AD0
ACARD_3S_AD2
ACARD_3S_AD1
ACARD_3S_AD4
ACARD_3S_AD3
ACARD_3S_AD6
ACARD_3S_AD5
ACARD_3S_D(14)_RFU
ACARD_3S_AD7
ACARD_3S_AD8
ACARD_3S_CBE0#
ACARD_3S_AD10
ACARD_3S_AD9
ACARD_3S_VS1#
ACARD_3S_AD11
ACARD_3S_AD13
ACARD_3S_AD12
ACARD_3S_AD15
ACARD_3S_AD14
ACARD_3S_AD16
ACARD_3S_CBE1#
ACARD_3S_A18_RFU
ACARD_3S_PAR
ACARD_3S_BLOCK#
ACARD_3S_PERR#
ACARD_3S_STOP#
ACARD_3S_GNT#
ACARD_3S_DEVSEL#
ACARD_3S_INT#
ACARD_3S_CLK
R461 10_5%
ACARD_3S_TRDY#
ACARD_3S_IRDY#
ACARD_3S_FRAME#
ACARD_3S_CBE2#
ACARD_3S_AD17
ACARD_3S_AD18
ACARD_3S_AD19
ACARD_3S_AD20
ACARD_3S_VS2#
ACARD_3S_AD21
ACARD_3S_RST#
ACARD_3S_AD22
ACARD_3S_SERR#
ACARD_3S_AD23
ACARD_3S_REQ#
ACARD_3S_AD24
ACARD_3S_CBE3#
ACARD_3S_AD25
ACARD_3S_AUDIO
ACARD_3S_AD26
ACARD_3S_STSCHG
ACARD_3S_AD27
ACARD_3S_AD28
ACARD_3S_AD29
ACARD_3S_AD30
ACARD_3S_D(2)_RFU
ACARD_3S_AD31
ACARD_3S_CLKRUN#
ACARD_3S_CD2#
Screw
Ground
TYCO_C_1612544_150P
Should be TYCO_1747287(6026A0045301) for one slot
INVENTEC
TITLE
DAVOS-DF
PC CARD SLOT
SIZE A3
CODE CS
DOC. NUMBER PC9603
REV A01
SHEET 52 OF 65
CHANGE by Kevin_Tseng
4-Nov-2004

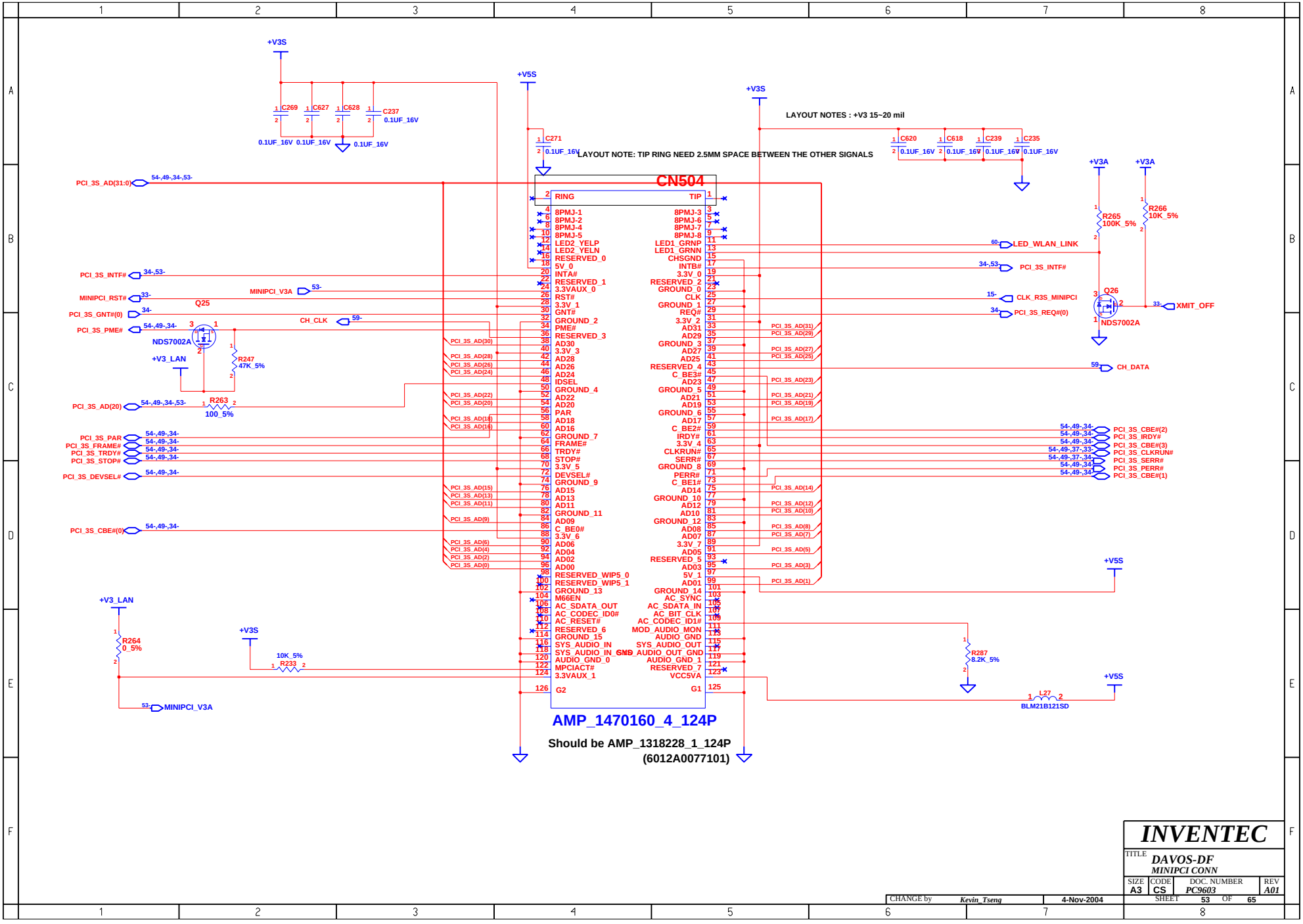

CHANGE by	Kevin_Tseng	4-Nov-2004	

INVENTEC

TITLE DAVOS-DF
MINIPCI CONN

SIZE	CODE	DOC. NUMBER	REV
A3	CS	PC9603	A01

SHEET 53 OF 65

REF	DF BCM4401	FF BCM5705
R371	NI	1K_1%
Q35	NI	BCP69
Q38	NI	BCP69
R447	NI	1K_5%
R409	NI	1K_5%
R410	NI	1K_5%
U36	NI	AT24C64A
U33	AT93C46A	NI
R420	0_5%	NI
R419	NI	0_5%
R418	0_5%	NI

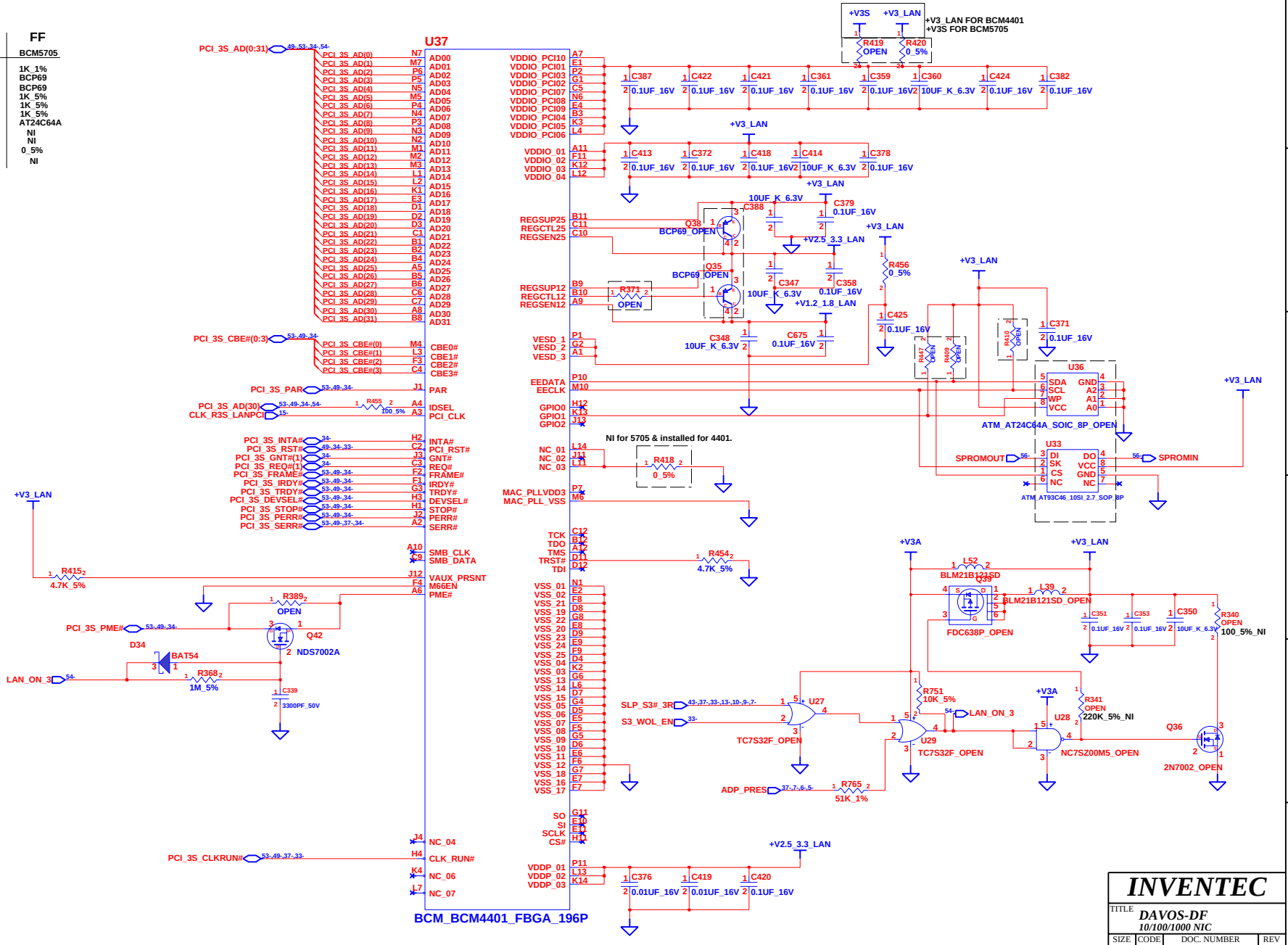

INVENTEC			
TITLE DAVOS-DF 10/100/1000 NIC			
SIZE A3	CODE CS	DOC. NUMBER PC9603	REV A01
CHANGE by Kevin_Tseng	4-Nov-2004	SHEET 54 OF 65	

BLANK

INVENTEC				
TITLE DAVOS-DF BLANK				
SIZE A3	CODE CS	DOC. NUMBER PC9603		REV A01
CHANGE by Kevin_Tseng	4-Nov-2004	SHEET 55 OF 65		

REF	DF BCM4401	FF BCM5705
L49	NI	BLM11A601S
C689	NI	0.1UF
C375	NI	0.1UF
R449	NI	49.9_1%
R450	NI	49.9_1%
R416	NI	49.9_1%
R417	NI	49.9_1%
C374	NI	0.1UF
C416	NI	0.1UF
R722	NI	75_1%
R724	NI	75_1%
R700	1.27K_1%	1.24K_1%
R372	NI	4.7K_5%
U41	LF_H3451S (LANKOM)	LG_2402S (LANKOM)

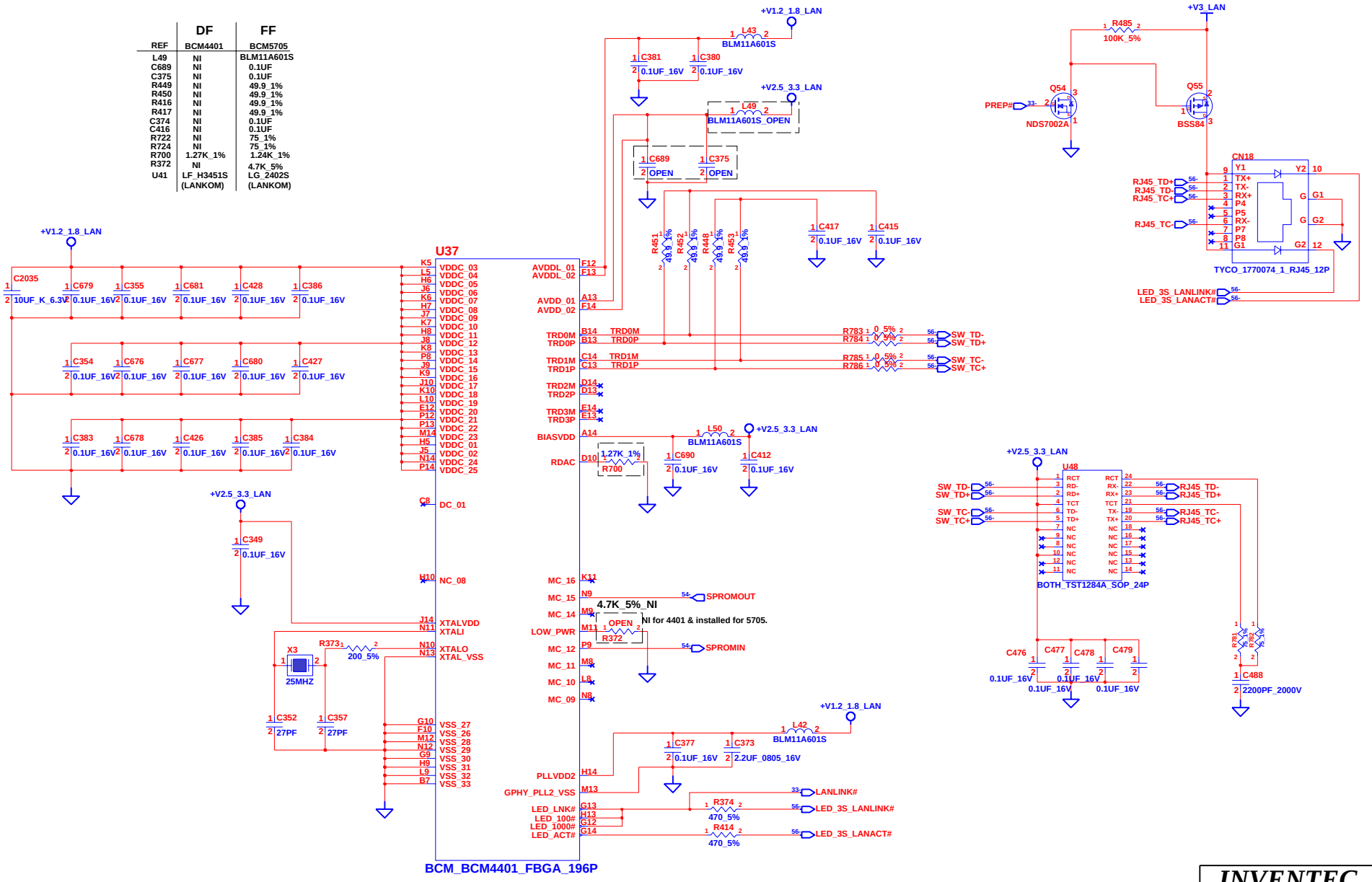

INVENTEC

TITLE DAVOS-DF NIC-TRANSFORMER

SIZE	CODE	DOC. NUMBER	REV
A3	CS	PC9603	A01

SHEET 56 OF 65

CHANGE by Kevin_Tseng 4-Nov-2004

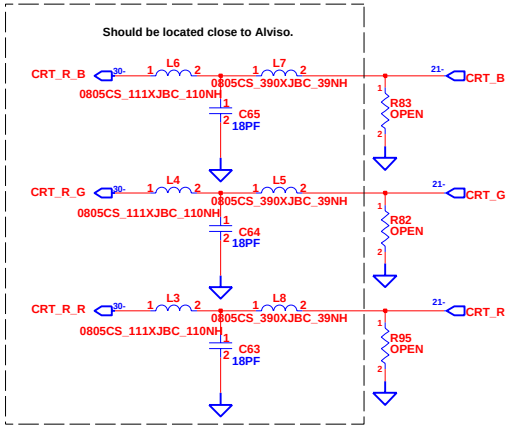

Docking for FF only

CHANGE by	*Kevin_Tseng*	4-Nov-2004	

INVENTEC

TITLE *DAVOS-DF*
DOCKING CONN

SIZE	CODE	DOC. NUMBER	REV
A3	CS	*PC9603*	*A01*

SHEET 57 OF 65

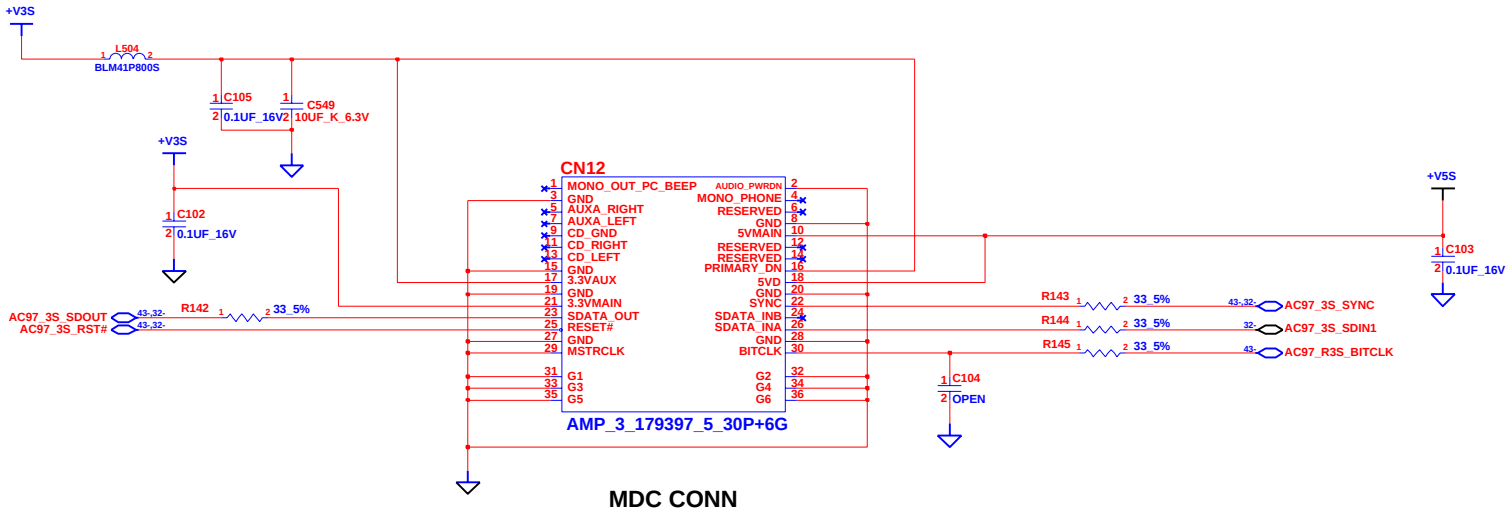

MDC CONN

CHANGE by	Kevin_Tseng	4-Nov-2004	

INVENTEC

TITLE *DAVOS-DF*
MDC CNN

SIZE	CODE	DOC. NUMBER	REV
A3	CS	PC9603	A01

SHEET 58 OF 65

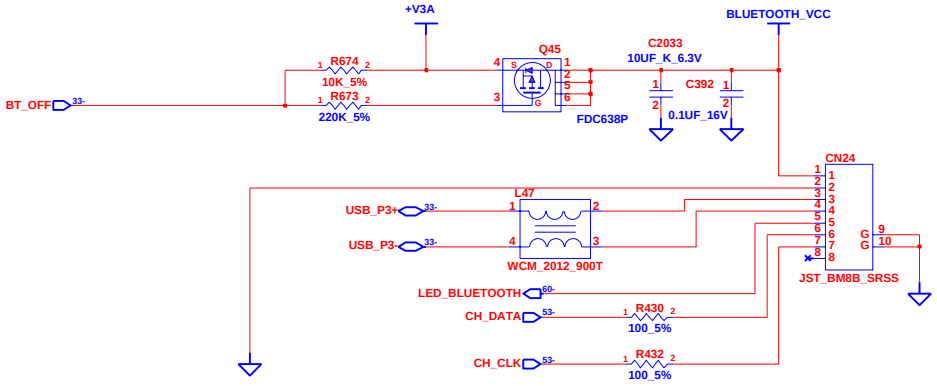

CHANGE by	Kevin_Tseng	4-Nov-2004	

INVENTEC

TITLE **DAVOS-DF**
BLUETOOTH CONN

SIZE	CODE	DOC. NUMBER	REV
A3	CS	PC9603	A01

SHEET 59 OF 65

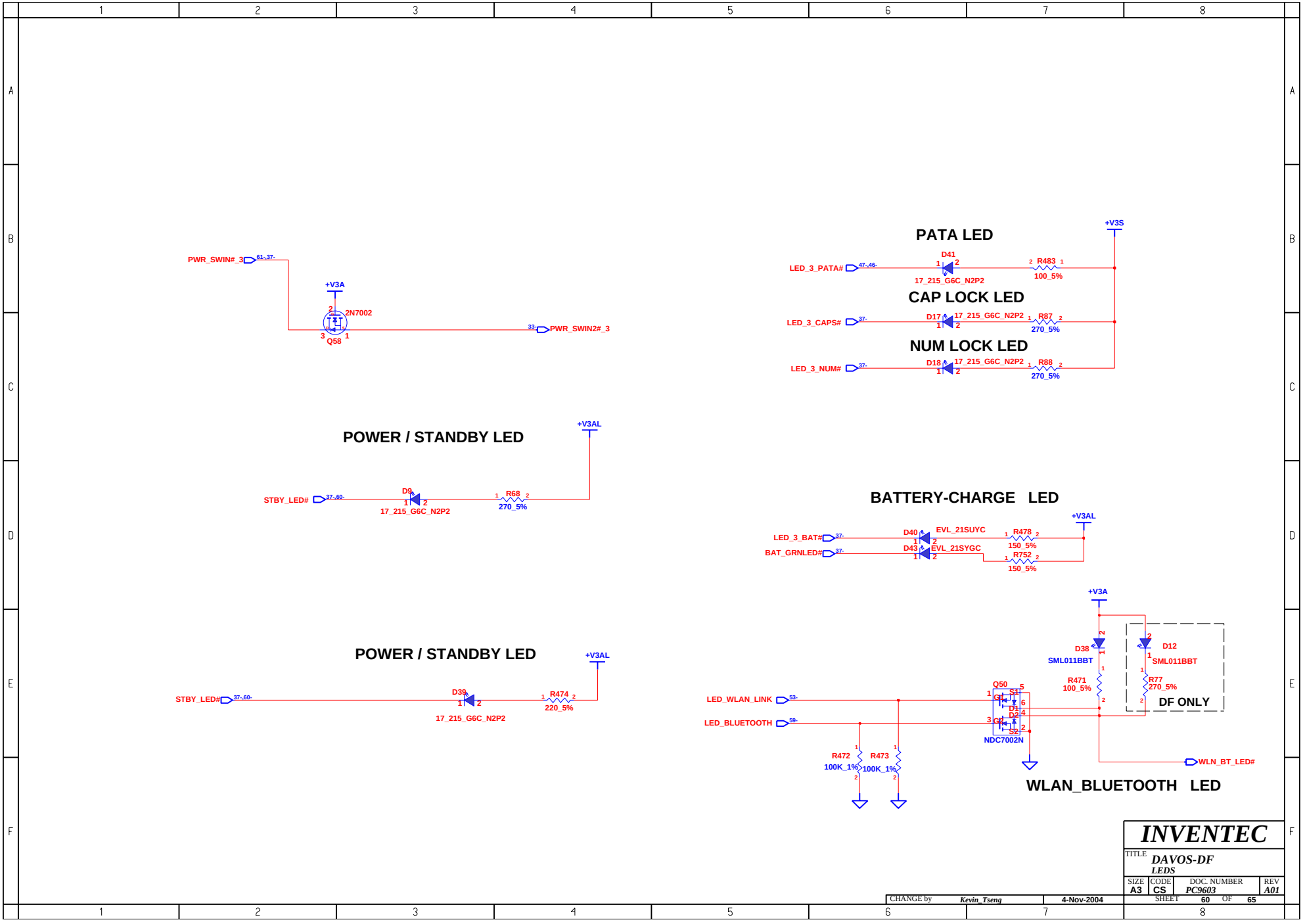
PWR_SWIN#_3
61-,37-
+V3A
2N7002
Q58
33-
PWR_SWIN2#_3
PATA LED
+V3S
LED_3_PATA#
47-,46-
D41
17_215_G6C_N2P2
R483
100_5%
CAP LOCK LED
LED_3_CAPS#
37-
D17
17_215_G6C_N2P2
R87
270_5%
NUM LOCK LED
LED_3_NUM#
37-
D18
17_215_G6C_N2P2
R88
270_5%
POWER / STANDBY LED
+V3AL
STBY_LED#
37-,60-
D9
17_215_G6C_N2P2
R68
270_5%
BATTERY-CHARGE LED
+V3AL
LED_3_BAT#
37-
D40
EVL_21SUYC
R478
150_5%
BAT_GRNLED#
37-
D43
EVL_21SYGC
R752
150_5%
POWER / STANDBY LED
+V3AL
STBY_LED#
37-,60-
D39
17_215_G6C_N2P2
R474
220_5%
+V3A
D38
SML011BBT
D12
SML011BBT
R77
270_5%
DF ONLY
R471
100_5%
LED_WLAN_LINK
53-
LED_BLUETOOTH
59-
Q50
NDC7002N
R472
100K_1%
R473
100K_1%
WLN_BT_LED#
WLAN_BLUETOOTH LED
INVENTEC
TITLE
DAVOS-DF
LEDS
SIZE
A3
CODE
CS
DOC. NUMBER
PC9603
REV
A01
SHEET
60
OF
65
CHANGE by
Kevin_Tseng
4-Nov-2004

LID SWITCH

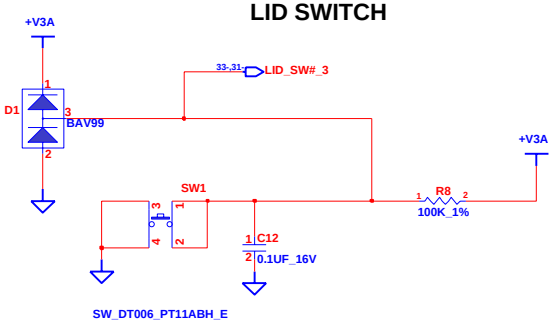

POWER SWITCH

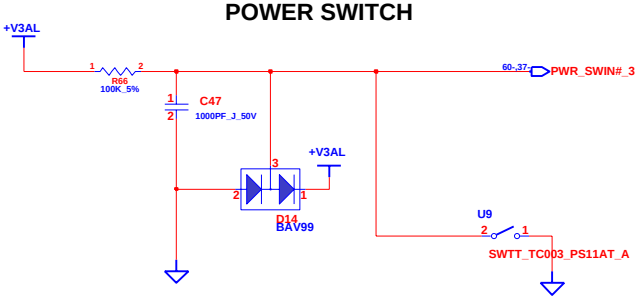

CHANGE by	*Kevin_Tseng*	4-Nov-2004	

INVENTEC

TITLE *DAVOS-DF SWITCH*

SIZE	CODE	DOC. NUMBER	REV
A3	CS	*PC9603*	*A01*

SHEET 61 OF 65

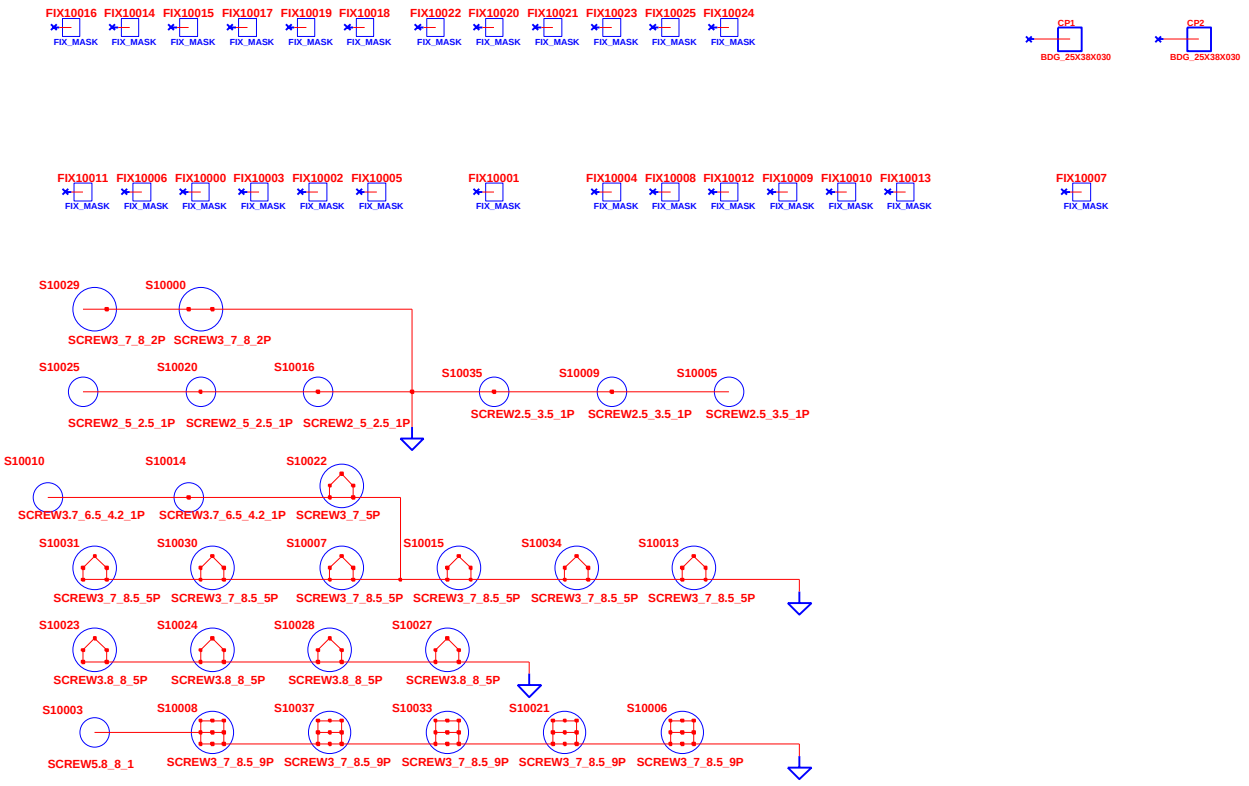

CHANGE by	Kevin_Tseng	4-Nov-2004	

INVENTEC

TITLE *DAVOS-DF*
SCREW

SIZE	CODE	DOC. NUMBER	REV
A3	CS	PC9603	A01

SHEET 62 OF 65

BUTTON & LED DAUGHTER BOARD

For FF only

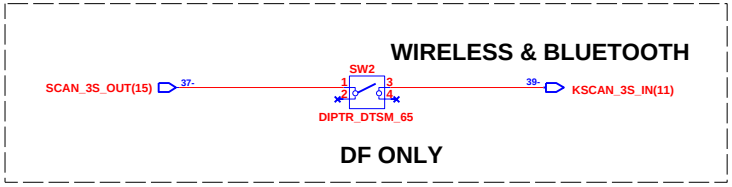

CHANGE by	Kevin_Tseng	4-Nov-2004	

INVENTEC

TITLE *DAVOS-DF*
BUTTON & LED Daughtor Board

SIZE	CODE	DOC. NUMBER	REV
A3	CS	PC9603	A01

SHEET 63 OF 65

LCD CABLE

1	
2	+V3S
3	
4	+V3S
5	
6	+V3S
7	
8	LCM_DDCPCLK
9	
10	LCM_DDCPDATA
11	LVDS_TXDL0-
12	LVDS_TXDL0+
13	LVDS_TXDL1-
14	LVDS_TXDL1+
15	LVDS_TXDL2-
16	LVDS_TXDL2+
17	LVDS_TXCL-
18	LVDS_TXCL+
19	GND
20	GND
21	LVDS_TXDU0-
22	LVDS_TXDU0+
23	LVDS_TXDU1-
24	LVDS_TXDU1+
25	LVDS_TXDU2-
26	LVDS_TXDU2+
27	LVDS_TXCU+
28	LVDS_TXCU-
29	GND
30	GND
31	
32	ALS_EN
33	+V5A
34	+V5A
35	+V5A
36	INV_PWM_3
37	+V3S
38	GND
39	GND
40	GND

keyboard

1	
2	
3	
4	SCAN_3S_OUT(9)
5	KSCAN_3S_IN(9)
6	KSCAN_3S_IN(11)
7	KSCAN_3S_IN(13)
8	SCAN_3S_IN(7)
9	KSCAN_3S_IN(6)
10	KSCAN_3S_IN(5)
11	SCAN_3S_OUT(1)
12	SCAN_3S_OUT(10)
13	SCAN_3S_OUT(6)
14	SCAN_3S_OUT(7)
15	SCAN_3S_OUT(4)
16	SCAN_3S_OUT(8)
17	SCAN_3S_OUT(3)
18	KSCAN_3S_IN(3)
19	KSCAN_3S_IN(1)
20	KSCAN_3S_IN(2)
21	KSCAN_3S_IN(4)
22	KSCAN_3S_IN(0)
23	KSCAN_3S_IN(10)
24	KSCAN_3S_IN(12)
25	KSCAN_3S_IN(8)
26	KSCAN_3S_IN(14)
27	SCAN_3S_OUT(5)
28	SCAN_3S_OUT(2)
29	SCAN_3S_OUT(0)
30	SCAN_3S_OUT(11)

Card Bus 6 in 1

1	VCC_MC
2	VCC_MC
3	VCC_MC
4	VCC_MC
5	LCD_6IN1
6	GND
7	MS_DATA0_SD_DAT0_SM_D0
8	MS_DATA1_SD_DAT1_SM_D1
9	MS_DATA2_SD_DAT2_SM_D2
10	MS_DATA3_SD_DAT3_SM_D3
11	GND
12	MS_CLK_SD_CLK_SM_ELWPZ
13	GND
14	MS_BS_SD_CMD_SM_WEZ
15	SM_ALE
16	SM_CLE
17	MS_CDZ
18	SD_CDZ
19	SD_WP_SM_CEZ
20	GND
21	SM_REZ
22	GND
23	SM_RBZ
24	SM_D4
25	SM_D5
26	SM_D6
27	SM_D7
28	SM_PHYS_WPZ
29	SM_CDZ
30	GND

BLUETOOTH CABLE

1	BLUETOOTH_VCC
2	GND
3	USB_P3+
4	USB_P3-
5	LED_BLUETOOTH
6	CH_DATA
7	CH_CLK
8	

SERIAL CABLE

1	RS232_R1IN
2	RS232_R2IN
3	RS232_R3IN
4	RS232_R4IN
5	RS232_R5IN
6	RS232_T1OUT
7	RS232_T2OUT
8	RS232_T3OUT
9	GND
10	GND

USB CABLE

1	+5A_USB
2	+5A_USB
3	+5A_USB
4	+5A_USB
5	USB_P6-
6	USB_P6+
7	USB_P7-
8	USB_P7+
9	GND
10	GND
11	GND
12	GND

TOUCHPAD CABLE

1	+V5S
2	IM_5S_DATA
3	IM_5S_CLK
4	GND
5	
6	
7	
8	

AUDIO CABLE

1	PR_AOUTL_DB
2	AUDIO_VCC_DB
3	PR_AOUTR_DB
4	AUDIO_VREF_DB
5	HPL_DB
6	GND
7	HPR_DB
8	GND
9	A_MIC1_DB
10	GND
11	A_MIC2_DB
12	GND

RJ45

CN1RJ45

1	RJ45TC+
2	RJ45_TD-
3	LED_3S_LANLINK#
4	LED_3S_LANACT#
5	+V3S
6	RJ45_TA-
7	RJ45_TA+
8	+V3S
9	RJ45_TB-
10	RJ45_TB+
11	RJ45_TC-
12	RJ45_TD+

RJ11

1	TIP
2	RING

SWITCH PCB CABLE

1	+V3A
2	+V3S
3	A_EAPD
4	WLN_BT_LED#
5	SCAN_3S_OUT(15)
6	KSCAN_3S_IN(8)
7	KSCAN_3S_IN(9)
8	KSCAN_3S_IN(10)
9	KSCAN_3S_IN(11)
10	KSCAN_3S_IN(12)
11	KSCAN_3S_IN(13)
12	GND

CHANGE by	Kevin_Tseng	4-Nov-2004	

INVENTEC

TITLE **DAVOS-DF**
Cables

SIZE	CODE	DOC. NUMBER	REV
A3	CS	PC9603	A01

SHEET 64 OF 65

IEC / HP Davos 1.0 Schematic Changes

PV-1

HP Confidential Information

Last Updated: ***October 28, 2004***

Item #	Component / Subsection	PG. #	Description of Requested Change	Date Open / Closed	Requested By	Status	IEC FBK/Date
1	ITP Conn (CN22)	19	Zone C6. Add 0.1uF no install capacitors pads to the following traces: H_TMS H_TCK H_TDO H_TRST# ITP_DBRESET Place the pads as close to the ITP conn as possible and keep the stubs as short as possible.	2004/9/17	BR	Open	Zone C6. Add 0.1uF no install capacitors pads to the following traces: H_TMS(C5003) H_TCK(C5004) H_TDO(C5005) H_TRST#(C5006) ITP_DBRESET(C5007) Place the pads as close to the ITP conn as possible and keep the stubs as short as possible.
2	Alviso	22	Zone C6. Add 0.1uF no install capacitor to H_CPURST#. Place the pads as close to Alviso as possible and keep the stubs as short as possible.	2004/9/17	BR	Open	Add C5008 to H_CPURST#. But there is no place can put the pad close to Alviso, so that put it close to ITP connector.
3	Wireless button	63	Zone F3, Delete pin2 & 4 of SW2 to ground, made it to NC.	2004/9/27	IEC	Open	Fixed in 0927.
4	6 in 1	50	Change pin2&3 of U42, pin1 of R720 to from +V5S to +V3S.	2004/9/27	IEC	Open	Fixed in 0927.
5	6 in 1	50	Zone D6, Exchage pin define of CN5001, pin20, pin21.	2004/9/27	IEC	Open	Fixed in 0927.
6	Power	11	Zone B4, Change C198 to 4.7uF_6.3V-for GSM interference issue.	2004/9/27	IEC	Open	Fixed in 0927.
7	Thermal	20	Zone D5, Change C290 to 4.7uF_6.3V-for GSM interference issue.	2004/9/27	IEC	Open	Fixed in 0927.
8	CRT	30	Zone C1, Add three analog bus switches to the RGB lines going to the notebook CRT connector.	2004/9/17	HP	Open	Zone C1, Add three analog bus switches(U2001, U2002, U2003) to the RGB lines going to the notebook CRT connector.
9	CLK gen	15	Zone C3, Change CLK_R3S_CBPCI from pin5(PCI5) of U30 to pin56(PCI2), Separate CLK_R3S_SIOPCI and CLK_R3S_FWHPCI from pin4(PCI4), and connect CLK_R3S_SIOPCI to pin5(PCI5) of U30.	2004/10/4	IEC	Open	Fixed in 1004.
10	CLK gen	15	Zone C3, Change R667, R712, R397, R650 to 12.1_1%, change R398, R711 to 33_5%.	2004/10/4	IEC	Open	According to Sonoma Platform Design Guide, PCICLK for sharing and alone should be different resistor value, 12.1% for sharing, 33_5% for alone.
11	ITP port	19	Zone C5, change R303 to open.	2004/10/4	IEC	Open	According to Sonoma Platform Design Guide Section 4.6.1.4 – ITP disable guidelines, we don't need R303 on TDO, if ITP disable.
12	CLK gen	15	Zone B6, Change R329, R330 to open.	2004/10/4	IEC	Open	For ITP disable.
13	NIC	15	Change NIC cotroller and related circuits to FF used.	2004/10/4	IEC	Open	For FF and DF schematic be separated.
14	Powergood circuit	13, 14	Sheet 13 zone C3. Connect PWR_GOOD_3 signal to pin 3 of Q28. Sheet 14 zone A6. Change R138 from10K5% to OPEN.	2004/10/6	BR	Open	This fixes OTS#138447 System will reboot instead of going into standby.--Fixed in 10/07.
15	Audio	45	Zone B7. Change C286 from 330uF_6.3V_METAL to OPEN	2004/10/6	BR	Open	Fixes OTS#014280 and OTS#0142219 Audio noise issues. This capacitor is not needed per our audio engineer.--Fixed in 10/07.
16	North bridge	24	Zone D4. Change L23 to FBM_11_322513_201A40T---in order to can handle up to 4A.	2004/10/7	HP	Open	.--Fixed in 10/07.

17	NIC	56	Zone E8, Remove CN28 for lan signal to docking going to on board.	2004/10/8	IEC	Open	.--Fixed in 10/08.
18	NIC	57	Zone E8, Remove CN10 for lan signal to docking going to on board.	2004/10/8	IEC	Open	.--Fixed in 10/08.
19	All	All	Change reference, C5003->C713, C5004->C714, C5005->C715, C5006->C716, C5007->C717, C5008->C718, U2001->U512, U2001->U512, U2002->U513, U2003->U514.	2004/10/8	IEC	Open	.--Fixed in 10/08.
20	Power	7	Add 1000pf cap(C719). from R743p1 to GND Add .1uf cap(C720). from U510p2 to GND Add 220k(R776) from U509p1 ()to U509p3. Disconnect V3AL_OFF# from U510p7 Disconnect Q533p3 from R742 Add NFET(Q534), tie gate to Q533p1, drain to Q533p3 and to V3AL_OFF#, and source to R742p2 & U510p1. Change U509 to MIC5235 Change R740 to 30.1k	2004/10/9	HP	Open	Issue was discovered with U510 pg7 in which it could begin to oscillate pulling down +V5AL prohibiting the system from booting. .--Fixed in 10/11 schematic.
21	VGA	30	Change pin 5 of U512/U513/U514 from +V2.5S to +V5S, Change pin1 from PREP# to ISO_PREP.	2004/10/11	IEC	Open	Change its VCC to +V5S for having a lower Ron, change enable pin of switch from PREP# to ISO_PREP# for preventing switch active when system off. .--Fixed in 10/11.
22	Audio	43	Change pin2 of L51 connect to pin1 of C362/C687/C686.	2004/10/11	IEC	Open	For SI2 Audio low level test failed issue. .--Fixed in 10/11.
23	Power	13	Change R332 to 1K.	2004/10/12	HP	Open	470 pullup for PWR_GOOD is too strong. .--Fixed in 10/12.
24	ITP	13	Add C721, C722, C723, C724, C725, C726--0.027uF no install caps on following signals--H_BPM0_ITP#, H_BPM1_ITP#, H_BPM2_ITP#, H_BPM3_ITP#, H_BPM4_PRDY#, H_BPM5_PREQ#, H_TCK.	2004/10/12	HP	Open	AC/DC transition & hang issue. .--Fixed in 10/12.
25	Power	5	Zone A4, R14 from 909 change to 221----Change OCP value.	2004/10/13	IEC	Open	Issue for OCP is throttling the CPU on AC .--Fixed in 10/22
26	Power	11	Zone B5, Add a 300 ohm resistor(R777) between C592 and +VBATR that can reduce Vcore drop during +VbatR raising.	2004/10/14	IEC	Open	AC/DC transition & hang issue. .--Fixed in 10/22
27	Audio	45	Zone B7, Remove C286 in order to place two transformers.	2004/10/14	IEC	Open	Fixed in 10/22
28	Power	10	Delete original circuits, add U47(TPS51100), R778, C466, C467, C468, C469, C470, C471.---For M_VREF is going to 0V when the failing system (Davos SI2 Model 1 with 256MB ProMOS memory) is returning from S3.	2004/10/26	IEC	Open	Fixed in 10/26
29	NIC	56	Change U46 to Pericom PI3L301DA, add C472, **C5005**, C474, C475. Add one more transformer(U48) Bothhand GST5009 and C476, C477, C478, C479, R779, R780, R781, R782, C488. Also change U41 to GST5009. Add no install resistors--R783, R784, R785, R786 for DF only.	2004/10/22	IEC	Open	Fixed in 10/22--update in 11/04
30	Power	11	Add eight 0.01uF(no install) caps(C480, C481, C482, C483, C484, C485, C486, C487), **and C473 no install bulk cap** on +VBATR plane.--for decoupling noise from +VBATR	2004/10/22	IEC	Open	Fixed in 10/22--update in 11/04

31	RTC	32	Zone B3, Change X4 to vail used, change C389, C429 from 15pF to 10pF in bom.	2004/10/27	IEC	Open	Fixed in 10/27
32	Alviso	21	Zone C6, Change R590 from 255_1% to 243_1% to modify R,G,B max Voltage and this change can make R,G,B max Voltage meet the SPEC value.	2004/10/27	HP	Open	Fixed in 10/27
33	Switch board	63	Change R4001, R4002 from 270_5% to 1.8K--change LED brightness.	2004/10/27	HP	Open	Fixed in 10/27
34	LEDs	60	Change R483, R471 from 270_5% to 100_5%, **change R478, R752 to 150_5%, change R474 to 220_5%**-change LED brightness.	2004/10/27	HP	Open	Fixed in 10/27---update in 11/04
35	NIC-DF only	54	~~Re-install Q39, Q36, L39, U27, U29, U28, R340, R341, remove L52, R751--For BCM4401 have worse power consumption.~~**----- We drop this change because OTS144058 had been closed by waiver approved.**	2004/10/27	IEC	Open	Fixed in 10/27---update in 11/04
36	Alviso	21	Zone D1, Change R177, R194 to open.---Intel has also stated that the fix for this problem with the Alviso pulling too much current is to remove the OCDCOMP[1:0] resistors on Alviso	2004/10/28	HP	Open	Fixed in 10/28
37	ICH6	33	Zone E3, Add 100k pulldown(R787) from PM_DPRSLPVR to GND.	2004/10/28	HP	Open	Fixed in 10/28