THIS DRAWING AND SPECIFICATIONS,HEREIN,ARE THE PROPERTY OF INVENTEC CORPORATION AND SHALL NOT BE REPODUCED,COPIED,OR USED IN WHOLE OR IN PART AS THE BASIS FOR THE MANUFACTURE OR SALE OF ITEMS WITHOUT WRITTEN PERMISSION,INVENTEC CORPORATION,2009 ALL RIGHT RESERVED.

For DB build
SOUTH BRIDGE
HM75 QPEG Q0
BD82PPSM
P/N : 6019B0919101

HSF Property:ROHS or Halogen-Free(5L3?)

DB BUILD QUANTITY LIST :

1310A2493104	10 PCS	CR-SG + H-VRAM + GIGA LAN
1310A2493105	72 PCS	CR-SG + S-VRAM + 10/100 LAN
1310A2493106	55 PCS	CR-UMA + GIGA LAN
1310A2493201	137 PCS	POWER /B
1310A2493601	137 PCS	PICK BTN /B
1310A2493701	137 PCS	USB /B

MOTHER BOARD PCB
P/N：6050A2493101

POWER BOARD PCB
P/N：6050A2493201

USB BOARD PCB
P/N：6050A2493601

TOUCHPAD BOARD PCB
P/N：6050A2493701

HARVEY 14

CR / HR UMA / DIS

2011.09.27

HARVEY 14 ID LIST
HURON RIVER UMA : 0X1854
HURON RIVER DIS : 0X1855
CHIEF RIVER UMA : 0X1856
CHIEF RIVER DIS : 0X1857

SUB SYSTEM ID :
HP : 0X103C

BASE SCHEMATIC :
CR-SG + SAMSUNG VRAM + 10/100 LAN + 90W ADAPTER + SUPPORT 27MHZ GREEN CLK + USB2.0 CONN

PAD402	不開鋼板	RTC Rest
PAD4500	不開鋼板	SM_Vrer
PAD2	開	
PAD4		開
PAD400	開	
PAD4700		開
PAD500	開	
PAD508		開
PAD6015	開	
PAD6100		開
PAD6103	開	
PAD6105		開
PAD6110	開	
PAD6150		開
PAD6200	開	
PAD6210		開
PAD6220	開	
PAD6300		開
PAD6301	開	
PAD6310		開
PAD6510	開	
PAD8500		開
PAD6610	開	
PAD6710		開
PAD6750	開	
PAD6970		開
PAD9000	開	
PAD9001		開
PAD9200	開	

GPU VRAM TYPE:

U5 , U6 , U7 , U8

SAMSUNG 1GB C-DIE
PN : 6019B0818601
R2 : NA
R3 : NA
R33 : NA
R61 : NA

HYNIX 1GB D-DIE
PN : 6019B0938301
R2 : MOUNT 0R : 60130B0000ZT
R3 : NA
R33 : NA
R61 : NA

SAMSUNG 512KB
R2 : NA
R3 : MOUNT
R33 : NA
R61 : NA

HYNIX 512MB
R2 : MOUNT
R3 : MOUNT
R33 : NA
R61 : NA

DIS GREEN CLK SUPPORT 27MHZ

U9	SLG3NB300V	P/N : 6019B0941101
C188	MOUNT	0.1UF : 6010A0036403
R126	MOUNT	10R : 60130B10000X
D4400	NA	P/N : 6011A0026803

UMA GREEN CLK

U9	SLG3NB250V	6019B0934701
C188	NA	
R126	NA	
D4400	NA	

DIS ADAPTER 90W

R802	MOUNT	100K : 60130B1040ZT
R769	NA	

UMA ADAPTER 65W

R802	NA	
R769	MOUNT	100K : 60130B1040ZT

USB 3.0 CONN

CN518 6012B0370301

C2405	MOUNT	0.1UF : 6010A0036403
C2406	MOUNT	0.1UF : 6010A0036403
D2400	NA >> ESD	
L470	MOUNT	P/N : 6014B0177901
L471	MOUNT	P/N : 6014B0177901

USB 2.0 CONN

CN518 6012B0370102

C2405	NA
C2406	NA
D2400	NA >> ESD
L470	NA
L471	NA

BOARD ID	CR-UMA HR-UMA INTEL	CR-SG HR-SG SEYMOUR	CR-SG HR-SG THAMES
ID0-HI R960	0	1	0
ID1-HI R905	0	0	1
ID2-HI R902	0	0	0
ID3-HI R967	0	0	0
ID4-HI R899	0	0	0
ID5-HI R914	1	1	1
ID0-LO R961	1	0	1
ID1-LO R903	1	1	0
ID2-LO R904	1	1	1
ID3-LO R968	1	1	1
ID4-LO R900	1	1	1
ID5-LO R920	0	0	0

ID0 = GPIO40 RXXX = 10K : 60130B1030ZT
ID1 = GPIO41 0 : RXXX NA 1 : RXXX MOUNT
ID2 = GPIO42
ID3 = GPIO43 BOARD_ID5 ONLY FOR WEBCAN USE
ID4 = GPIO9 FOR HD WEB CAM BOARD_ID5 PULL P3V3A
ID5 = GPIO10 FOR VGA WEB CAM BOARD_ID5 PULL GND

M/B ID	DB	SI	PV	MV
R844	MOUNT	NA	MOUNT	NA
R824	MOUNT	MOUNT	NA	NA
R845	NA	MOUNT	NA	MOUNT
R828	NA	NA	MOUNT	MOUNT
		NOV	JAN	MAR

RXXX = 10K : 60130B1030ZT

RTL8161FH = 6019B0928101(10/100/1000)
RTL8165EH = 6019B0928301(10/100)

RTL8165EH(10/100) LDO MODE

R408 : MOUNT ----> CHOOSE LDO MODE 0R : 60130B0000ZT
R407 : NA ----> CHOOSE SWITCHING MODE
R413 : NA
C404 : NA
C405 : NA
C406 : NA
C409 : NA
C411 : NA
C415 : NA
C417 : NA
C420 : NA
L400 : NA
U470 : NA
U502 : MOUNT 6016B0008101
U400 : MOUNT 6019B0928301 (10/100 LAN)

RTL8161FH(GIGA-LAN) SWITCHING MODE

R408 : NA ----> CHOOSE LDO MODE
R407 : MOUNT ----> CHOOSE SWITCHING MODE 0R : 60130B1030ZT
R413 : MOUNT 0R_0603 : 60130B00000Z
C404 : MOUNT 4.7UF : 6010B0009904
C405 : MOUNT 0.1UF : 6010A0036403
C406 : MOUNT 0.1UF : 6010A0036403
C409 : MOUNT 0.1UF : 6010A0036403
C411 : MOUNT 0.1UF : 6010A0036403
C415 : MOUNT 0.1UF : 6010A0036403
C417 : MOUNT 4.7UF : 6010B0009904
C420 : MOUNT 0.1UF : 6010A0036403
L400 : MOUNT P/N : 6014B0200401
U470 : MOUNT 6016B0010401
U502 : NA
U400 : MOUNT 6019B0928101 (GIGALAN)

REVISION HISTORY		
DATE	CHANGE NO.	REV

	EE	DATE	POWER	DATE
DRAWER				
DESIGN				
CHECK				
RESPONSIBLE				

INVENTEC
TITLE MODEL,PROJECT,FUNCTION
HARVEY 14
SIZE C | CODE CS | DOC.NUMBER 1310xxxxx-0-0 | REV X01
SIZE: | VER:
FILE NAME:
P/N 6050A2493101 REV X
SHEET 1 of 57

Index

01 Project Name
02 Page Index
03 Block Diagram
04 Power Procedure
05 Charger
06 Battery Connecter
07 P3V3A, P5V0A
08 P1V5
09 P1V05S
10 P1V8S
11 PVSA
12 PVCORE-1
13 PVCORE-2
14 PORT & EMI PART
15 P3V3S, P5V0S
16 GREEN CLK
17 CPU -1
18 CPU-2
19 CPU-3
20 CPU-4
21 CPU-5
22 CPU-6
23 Thermal & Fan
24 DDR3-1
25 DDR3-2
26 PCH-1
27 PCH-2
28 PCH-3
29 PCH-4
30 PCH-5
31 PCH-6
32 PCH-7
33 PCH-8
34 PCH-9
35 EC ITE8517E
36 KB & LED
37 CRT
38 LCD & WEBCAN
39 HDMI
40 SATA HDD& ODD
41 LAN
42 RJ-45 CONN
43 CARD READER
44 AUDIO CODEC
45 HP & MIC JACK
46 WLAN
47 USB 3.0 CONN
48 SEYMOUR PCI-E INTERFACE
49 SEYMOUR CRT CLK THERMAL
50 SEYMOUR THERMAL SENSOR
51 SEYMOUR POWER
52 SEYMOUR DP-POWER & LVDS
53 SEYMOUR MEMORY INTERFACE
54 VRAM DDR3
55 DGPU POWER EE
56 DGPU POWER
57 USB, POWERBUTTON ,TP DB

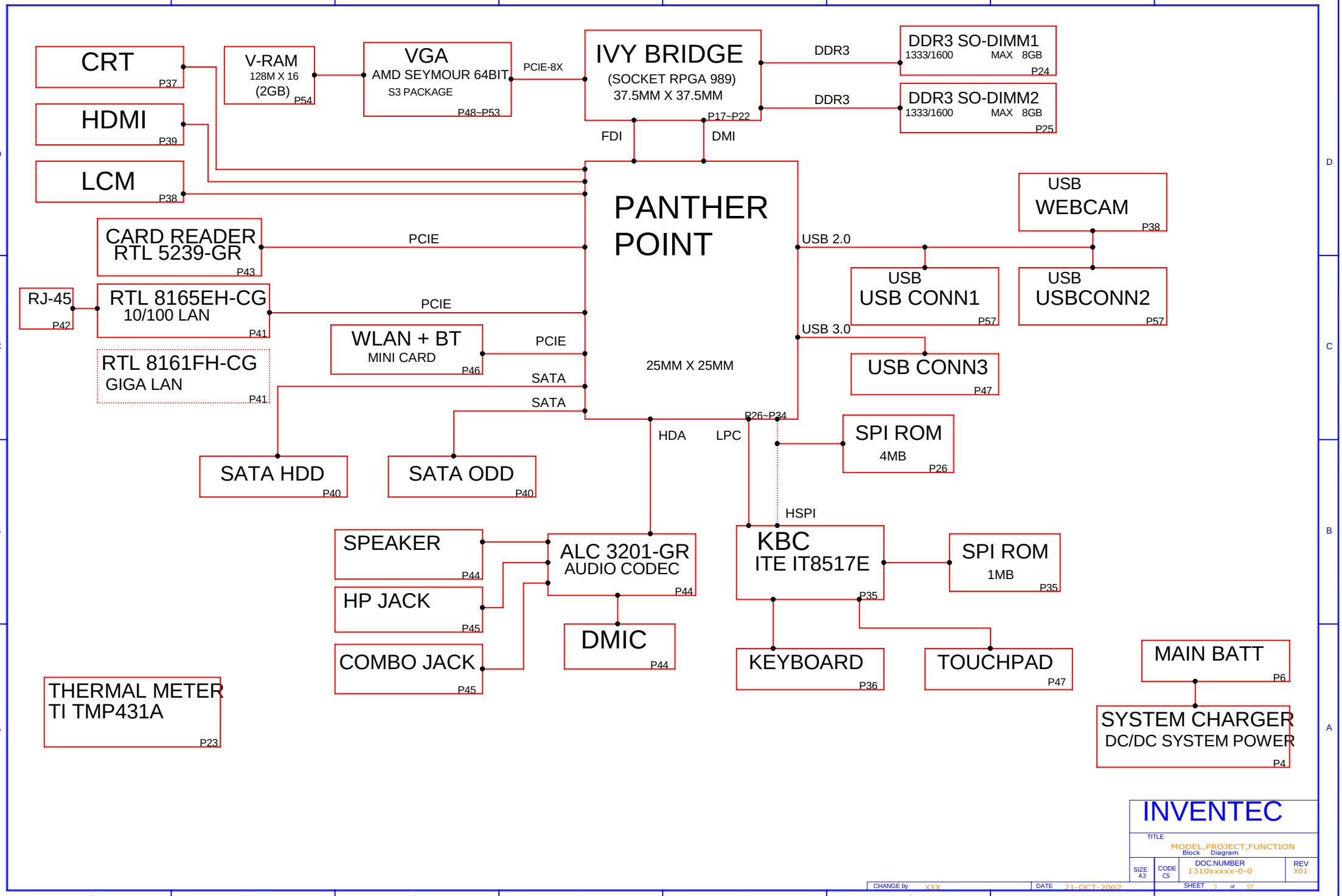
CRT
P37
HDMI
P39
LCM
P38
V-RAM
128M X 16
(2GB)
P54
VGA
AMD SEYMOUR 64BIT
S3 PACKAGE
P48~P53
PCIE-8X
IVY BRIDGE
(SOCKET RPGA 989)
37.5MM X 37.5MM
P17~P22
DDR3
DDR3
DDR3 SO-DIMM1
1333/1600 MAX 8GB
P24
DDR3 SO-DIMM2
1333/1600 MAX 8GB
P25
FDI
DMI
PANTHER POINT
25MM X 25MM
USB 2.0
USB 3.0
USB
WEBCAM
P38
USB
USB CONN1
P57
USB
USBCONN2
P57
USB CONN3
P47
CARD READER
RTL 5239-GR
P43
PCIE
RJ-45
P42
RTL 8165EH-CG
10/100 LAN
P41
PCIE
WLAN + BT
MINI CARD
P46
PCIE
RTL 8161FH-CG
GIGA LAN
P41
SATA
SATA
SATA HDD
P40
SATA ODD
P40
HDA
LPC
P26~P34
SPI ROM
4MB
P26
HSPI
SPEAKER
P44
HP JACK
P45
COMBO JACK
P45
ALC 3201-GR
AUDIO CODEC
P44
DMIC
P44
KBC
ITE IT8517E
P35
SPI ROM
1MB
P35
KEYBOARD
P36
TOUCHPAD
P47
MAIN BATT
P6
SYSTEM CHARGER
DC/DC SYSTEM POWER
P4
THERMAL METER
TI TMP431A
P23
INVENTEC
TITLE
MODEL,PROJECT,FUNCTION
Block Diagram
SIZE A3
CODE CS
DOC.NUMBER 1310xxxxx-0-0
REV X01
CHANGE by XXX
DATE 21-OCT-2002
SHEET 3 of 57

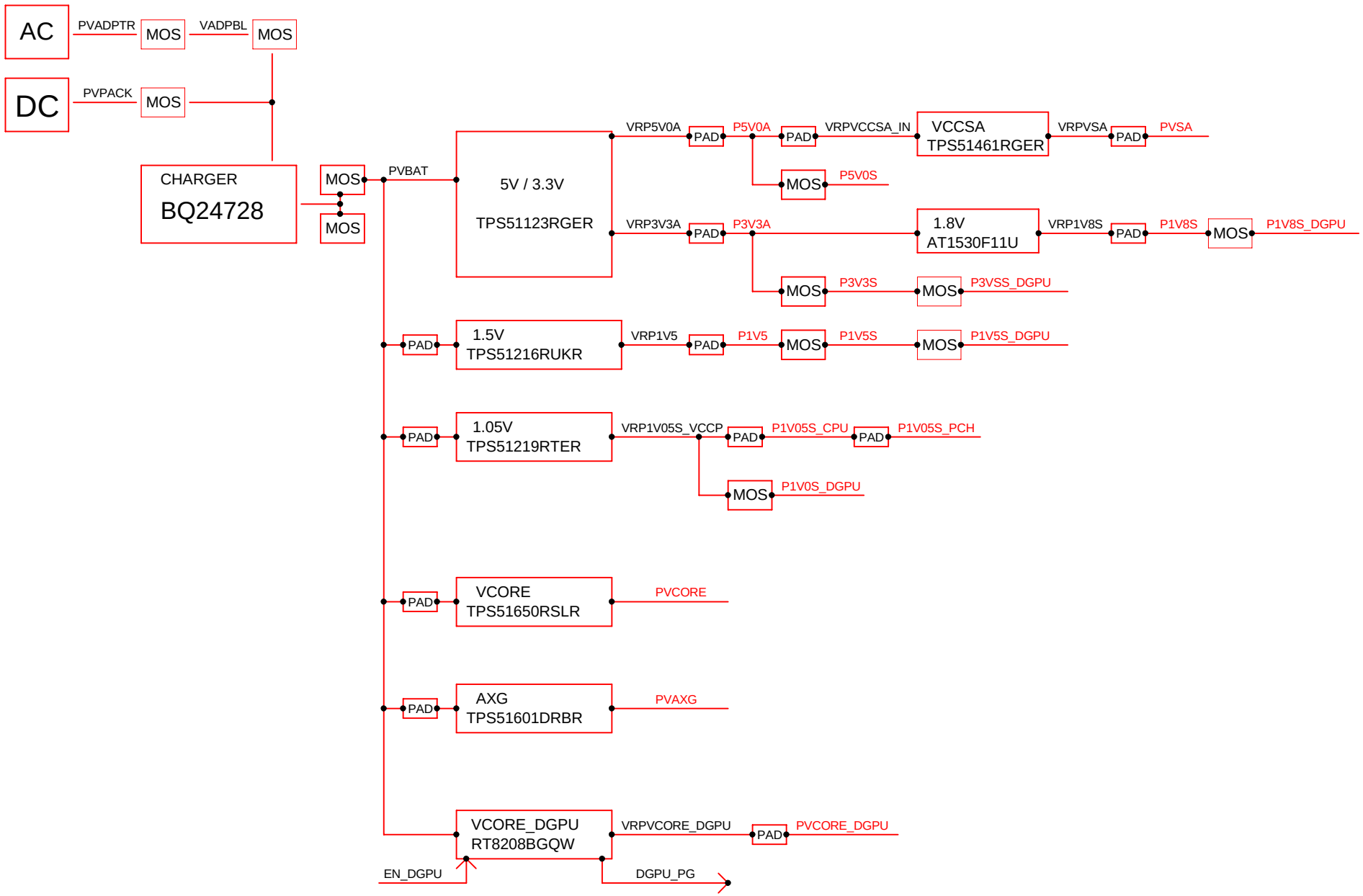

INVENTEC

TITLE
MODEL,PROJECT,FUNCTION
POWER PROCEDURE

SIZE	CODE	DOC.NUMBER	REV
A3	CS	1310xxxxx-0-0	X01

CHANGE by XXX | DATE 21-OCT-2002 | SHEET 4 of 57

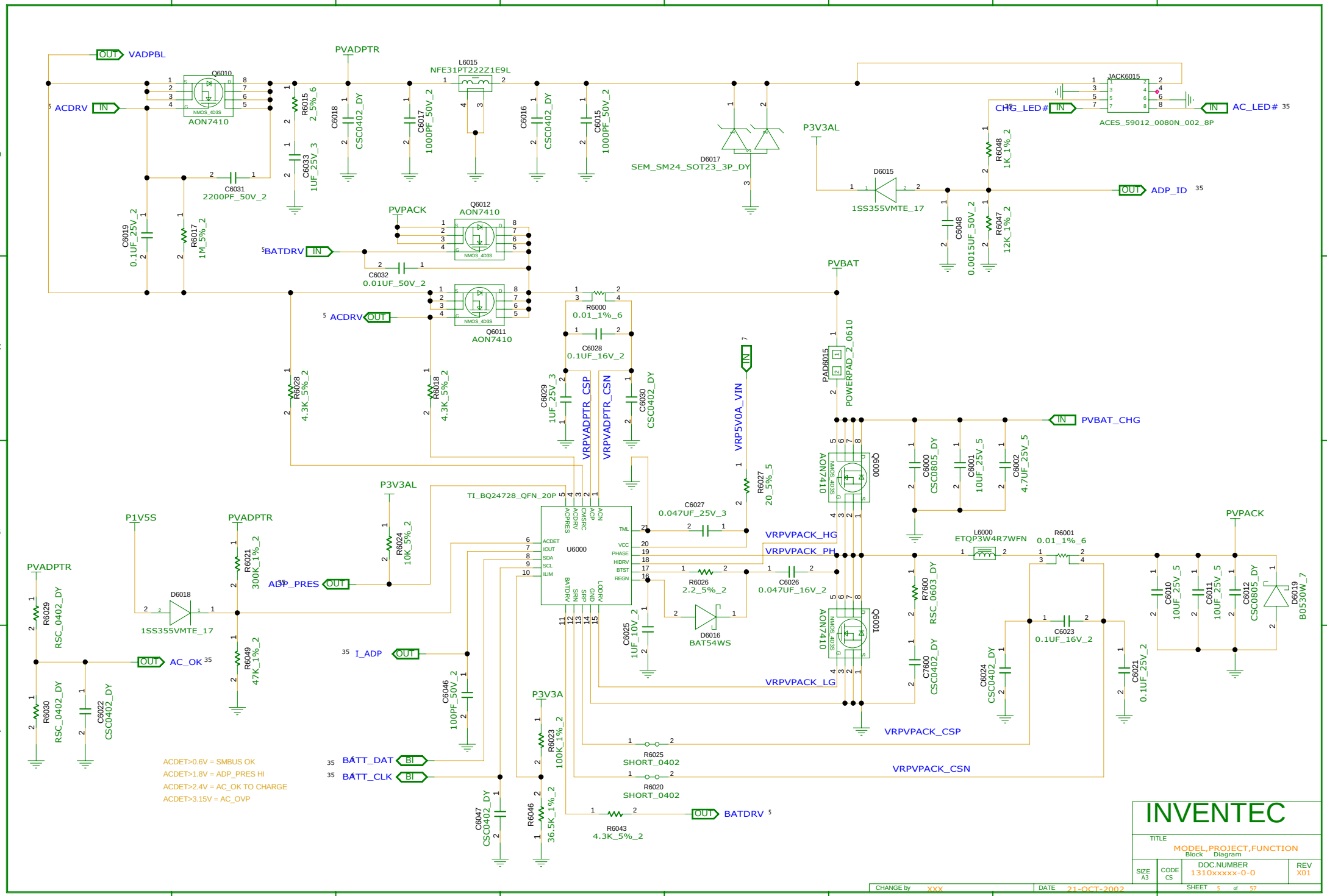
VADPBL
ACDRV
Q6010
AON7410
PVADPTR
L6015
NFE31PT222Z1E9L
R6015 2_5%_6
C6018 CSC0402_DY
C6017 1000PF_50V_2
C6016 CSC0402_DY
C6015 1000PF_50V_2
C6033 1UF_25V_3
C6031 2200PF_50V_2
C6019 0.1UF_25V_2
R6017 1M_5%_2
D6017 SEM_SM24_SOT23_3P_DY
P3V3AL
D6015 1SS355VMTE_17
JACK6015
ACES_59012_0080N_002_8P
CHG_LED#
AC_LED#
R6048 1K_1%_2
ADP_ID
C6048 0.0015UF_50V_2
R6047 12K_1%_2
PVPACK
Q6012 AON7410
BATDRV
C6032 0.01UF_50V_2
Q6011 AON7410
ACDRV
R6000 0.01_1%_6
C6028 0.1UF_16V_2
PVBAT
PAD6015 POWERPAD_2_0610
R6028 4.3K_5%_2
R6018 4.3K_5%_2
C6029 1UF_25V_3
VRPVADPTR_CSP
VRPVADPTR_CSN
C6030 CSC0402_DY
VRP5V0A_VIN
R6027 20_5%_5
PVBAT_CHG
Q6000 AON7410
C6000 CSC0805_DY
C6001 10UF_25V_5
C6002 4.7UF_25V_5
P3V3AL
TI_BQ24728_QFN_20P
U6000
C6027 0.047UF_25V_3
VRPVPACK_HG
VRPVPACK_PH
P1V5S
PVADPTR
R6024 10K_5%_2
R6021 300K_1%_2
ADP_PRES
D6018 1SS355VMTE_17
R6026 2.2_5%_2
C6026 0.047UF_16V_2
D6016 BAT54WS
C6025 1UF_10V_2
Q6001 AON7410
R7600 RSC_0603_DY
C7600 CSC0402_DY
VRPVPACK_LG
L6000 ETQP3W4R7WFN
R6001 0.01_1%_6
PVPACK
C6010 10UF_25V_5
C6011 10UF_25V_5
C6012 CSC0805_DY
D6019 B0530W_7
C6023 0.1UF_16V_2
C6024 CSC0402_DY
C6021 0.1UF_25V_2
PVADPTR
R6029 RSC_0402_DY
AC_OK
R6030 RSC_0402_DY
C6022 CSC0402_DY
R6049 47K_1%_2
I_ADP
C6046 100PF_50V_2
P3V3A
R6023 100K_1%_2
VRPVPACK_CSP
R6025 SHORT_0402
VRPVPACK_CSN
BATT_DAT
BATT_CLK
R6020 SHORT_0402
C6047 CSC0402_DY
R6046 36.5K_1%_2
R6043 4.3K_5%_2
BATDRV
ACDET>0.6V = SMBUS OK
ACDET>1.8V = ADP_PRES HI
ACDET>2.4V = AC_OK TO CHARGE
ACDET>3.15V = AC_OVP
INVENTEC
TITLE
MODEL,PROJECT,FUNCTION
Block Diagram
SIZE A3
CODE CS
DOC.NUMBER 1310xxxxx-0-0
REV X01
CHANGE by XXX
DATE 21-OCT-2002
SHEET 5 of 57

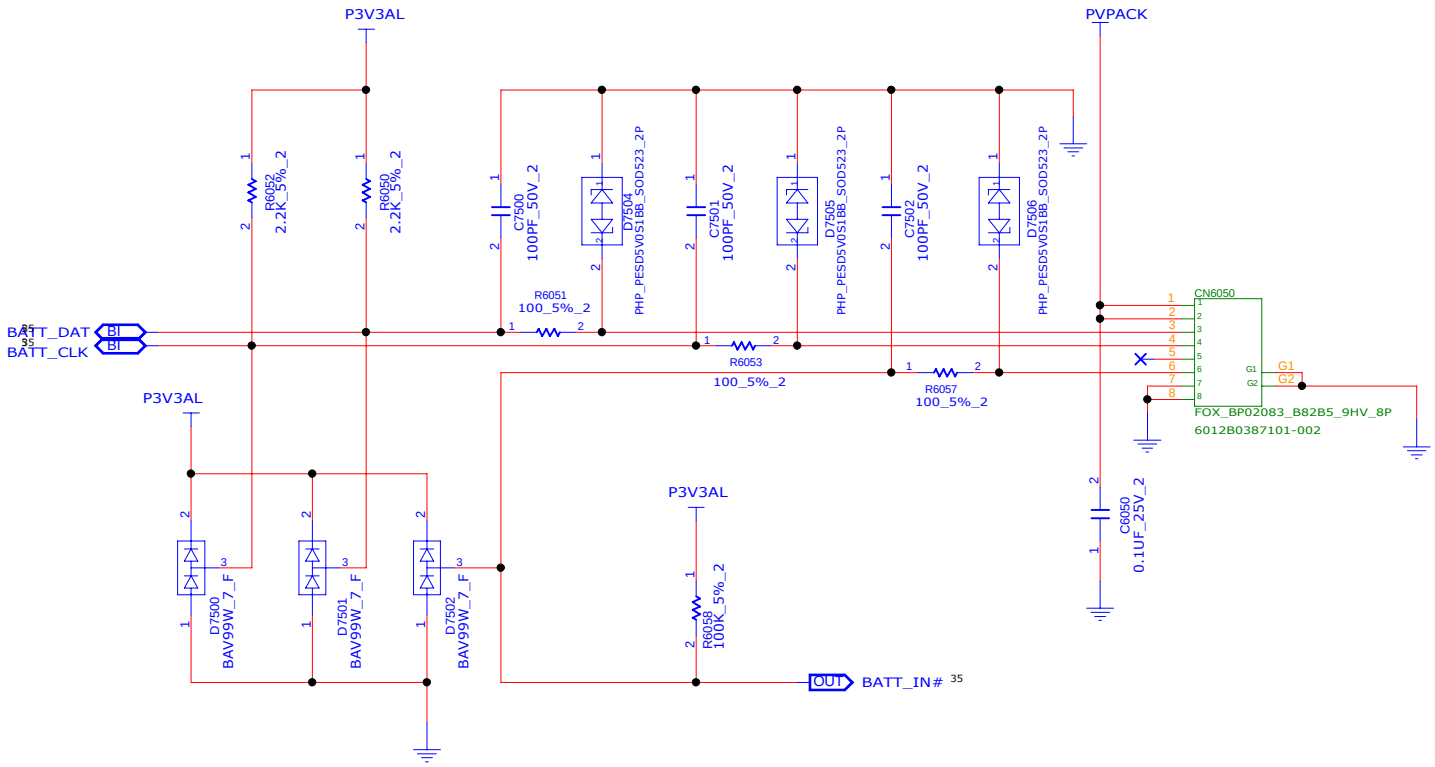

INVENTEC

TITLE
MODEL,PROJECT,FUNCTION
SELETOR

SIZE	CODE	DOC.NUMBER	REV
A3	CS	1310xxxxx-0-0	X01

CHANGE by XXX DATE 21-OCT-2002 SHEET 6 of 57

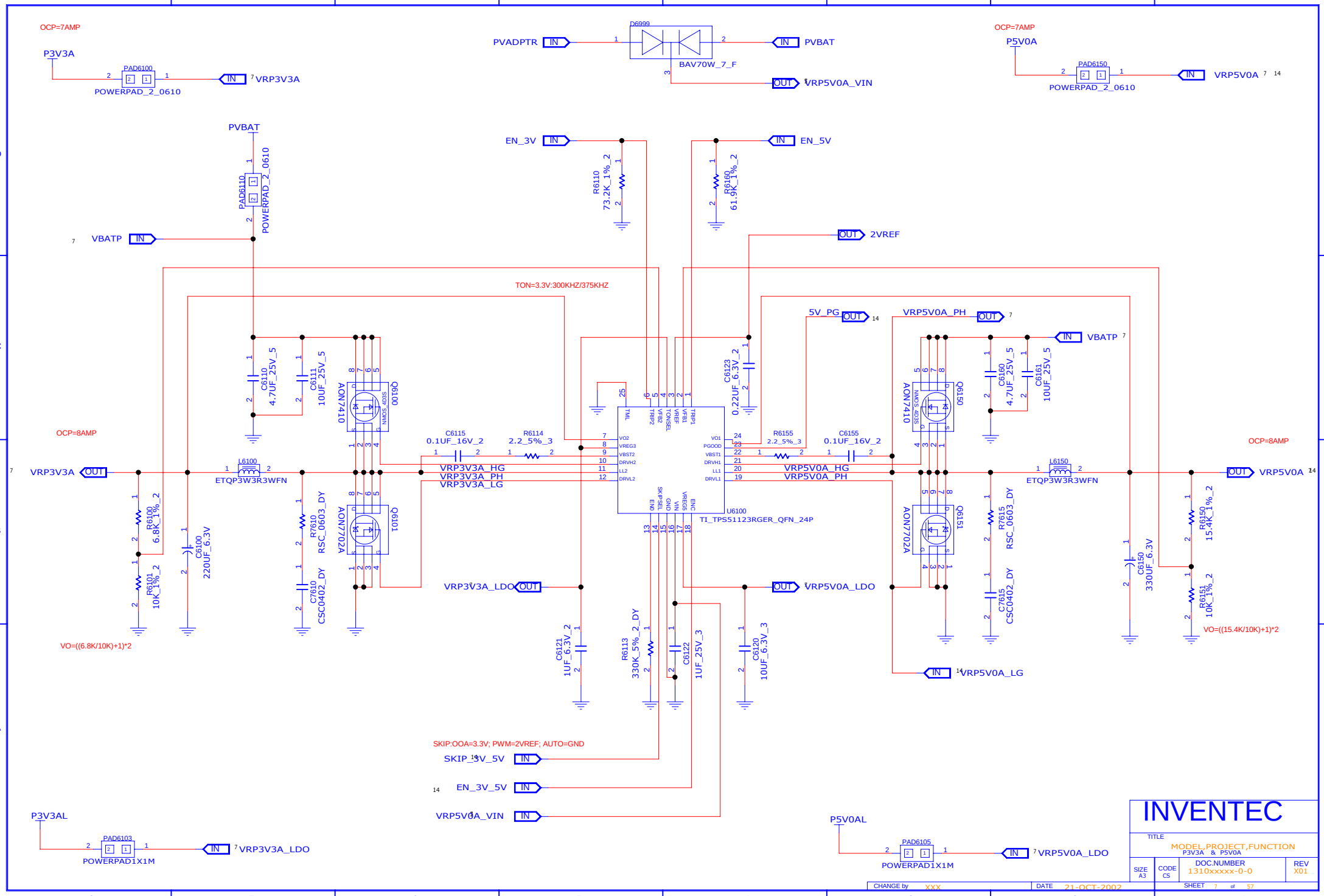
OCP=7AMP
P3V3A
PAD6100
POWERPAD_2_0610
VRP3V3A
PVADPTR
D6999
BAV70W_7_F
PVBAT
VRP5V0A_VIN
OCP=7AMP
P5V0A
PAD6150
POWERPAD_2_0610
VRP5V0A
PVBAT
PAD6110
POWERPAD_2_0610
EN_3V
R6110
73.2K_1%_2
R6160
61.9K_1%_2
EN_5V
VBATP
2VREF
TON=3.3V:300KHZ/375KHZ
5V_PG
VRP5V0A_PH
VBATP
C6110
4.7UF_25V_5
C6111
10UF_25V_5
AON7410
Q6100
C6123
0.22UF_6.3V_2
C6160
4.7UF_25V_5
C6161
10UF_25V_5
AON7410
Q6150
OCP=8AMP
C6115
0.1UF_16V_2
R6114
2.2_5%_3
R6155
2.2_5%_3
C6155
0.1UF_16V_2
OCP=8AMP
VRP3V3A
L6100
ETQP3W3R3WFN
VRP3V3A_HG
VRP3V3A_PH
VRP3V3A_LG
VRP5V0A_HG
VRP5V0A_PH
L6150
ETQP3W3R3WFN
VRP5V0A
R6610
6.8K_1%_2
R6601
10K_1%_2
C6100
220UF_6.3V
R7610
RSC_0603_DY
C7610
CSC0402_DY
AON7702A
Q6101
U6100
TI_TPS51123RGER_QFN_24P
AON7702A
Q6151
R7615
RSC_0603_DY
C7615
CSC0402_DY
C6150
330UF_6.3V
R6150
15.4K_1%_2
R6151
10K_1%_2
VRP3V3A_LDO
VRP5V0A_LDO
C6121
1UF_6.3V_2
R6113
330K_5%_2_DY
C6122
1UF_25V_3
C6120
10UF_6.3V_3
VRP5V0A_LG
VO=((6.8K/10K)+1)*2
VO=((15.4K/10K)+1)*2
SKIP:OOA=3.3V; PWM=2VREF; AUTO=GND
SKIP_3V_5V
EN_3V_5V
VRP5V0A_VIN
P3V3AL
PAD6103
POWERPAD1X1M
VRP3V3A_LDO
P5V0AL
PAD6105
POWERPAD1X1M
VRP5V0A_LDO
INVENTEC
TITLE
MODEL,PROJECT,FUNCTION
P3V3A & P5V0A
SIZE A3
CODE CS
DOC.NUMBER 1310xxxxx-0-0
REV X01
CHANGE by XXX
DATE 21-OCT-2002
SHEET 7 of 57

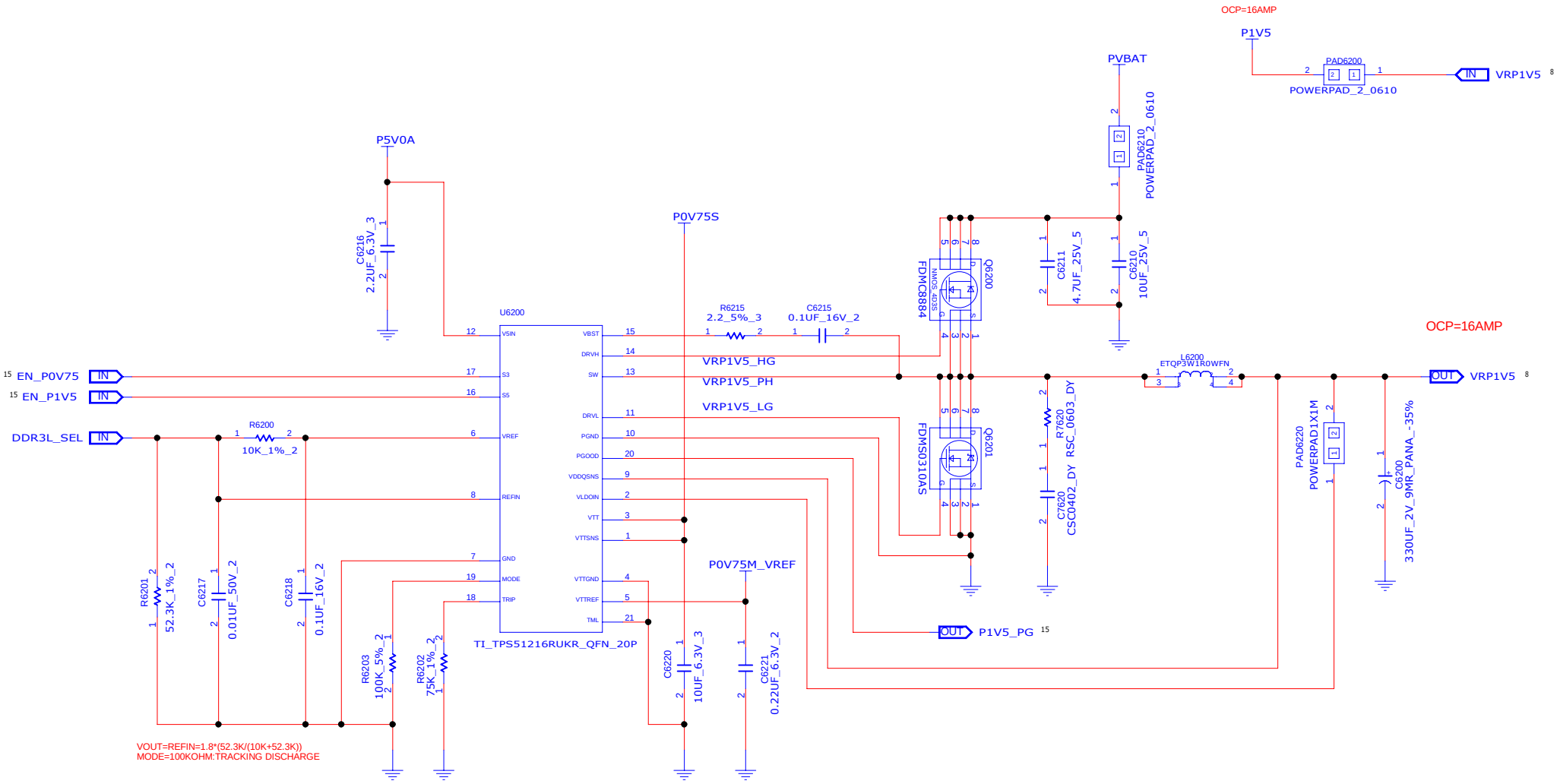

Table 1. S3/S5 Power State Control

STATE	S3	S5	VREF	VDDQ	VTTREF	VTT
S0	HI	HI	ON	ON	ON	ON
S3	LO	HI	ON	ON	ON	OFF(High-Z)
S4/S5	LO	LO	OFF	OFF(Discharge)	OFF(Discharge)	OFF(Discharge)

INVENTEC

TITLE
MODEL,PROJECT,FUNCTION
P1V5

SIZE	CODE	DOC.NUMBER	REV
A3	CS	1310xxxxx-0-0	X01

CHANGE by XXX DATE 21-OCT-2002 SHEET 8 of 57

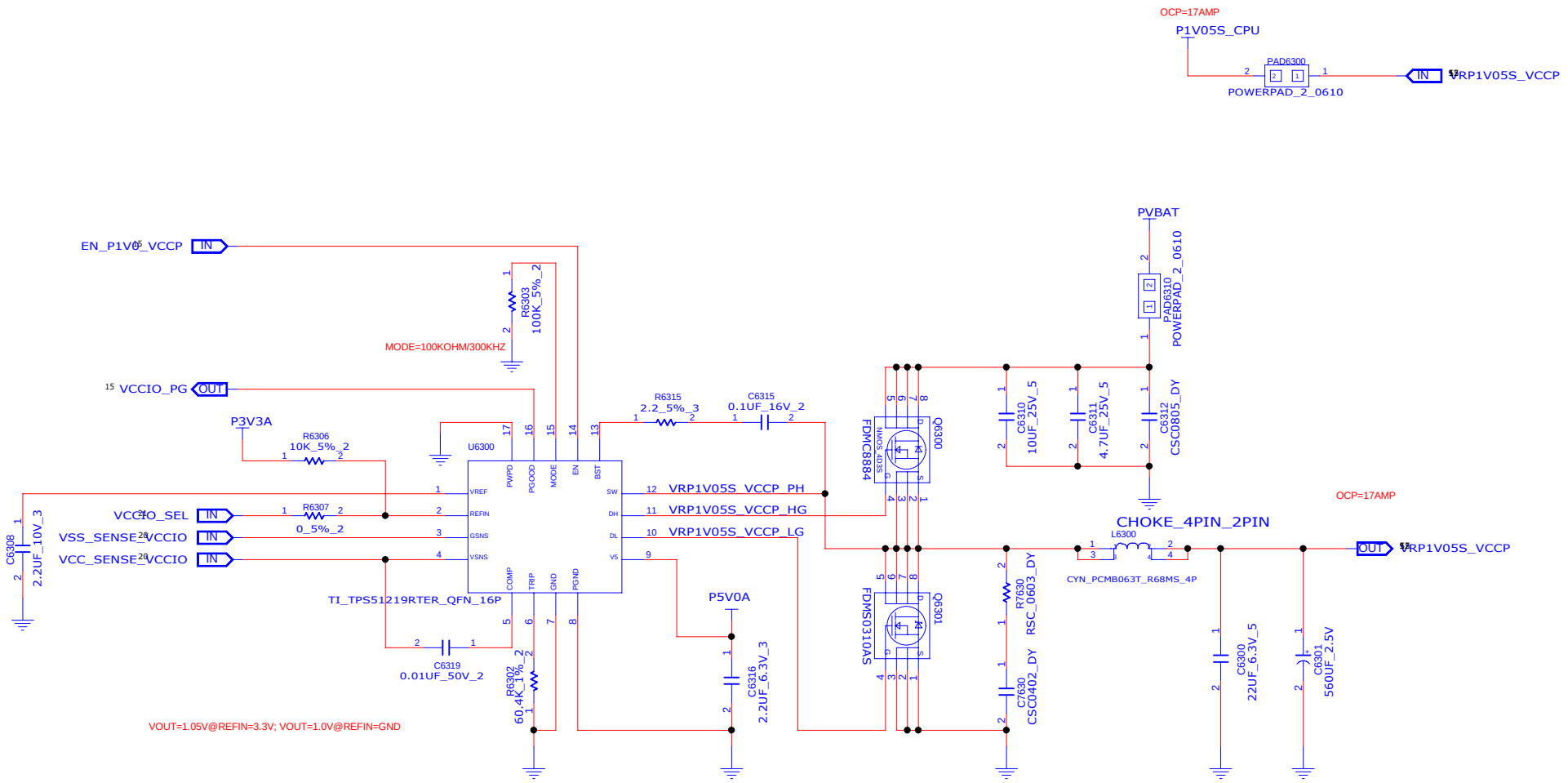

INVENTEC

TITLE
MODEL,PROJECT,FUNCTION
P1V05S_CPU

SIZE	CODE	DOC.NUMBER	REV
A3	CS	1310xxxxx-0-0	X01

CHANGE by XXX DATE 21-OCT-2002 SHEET 9 of 57

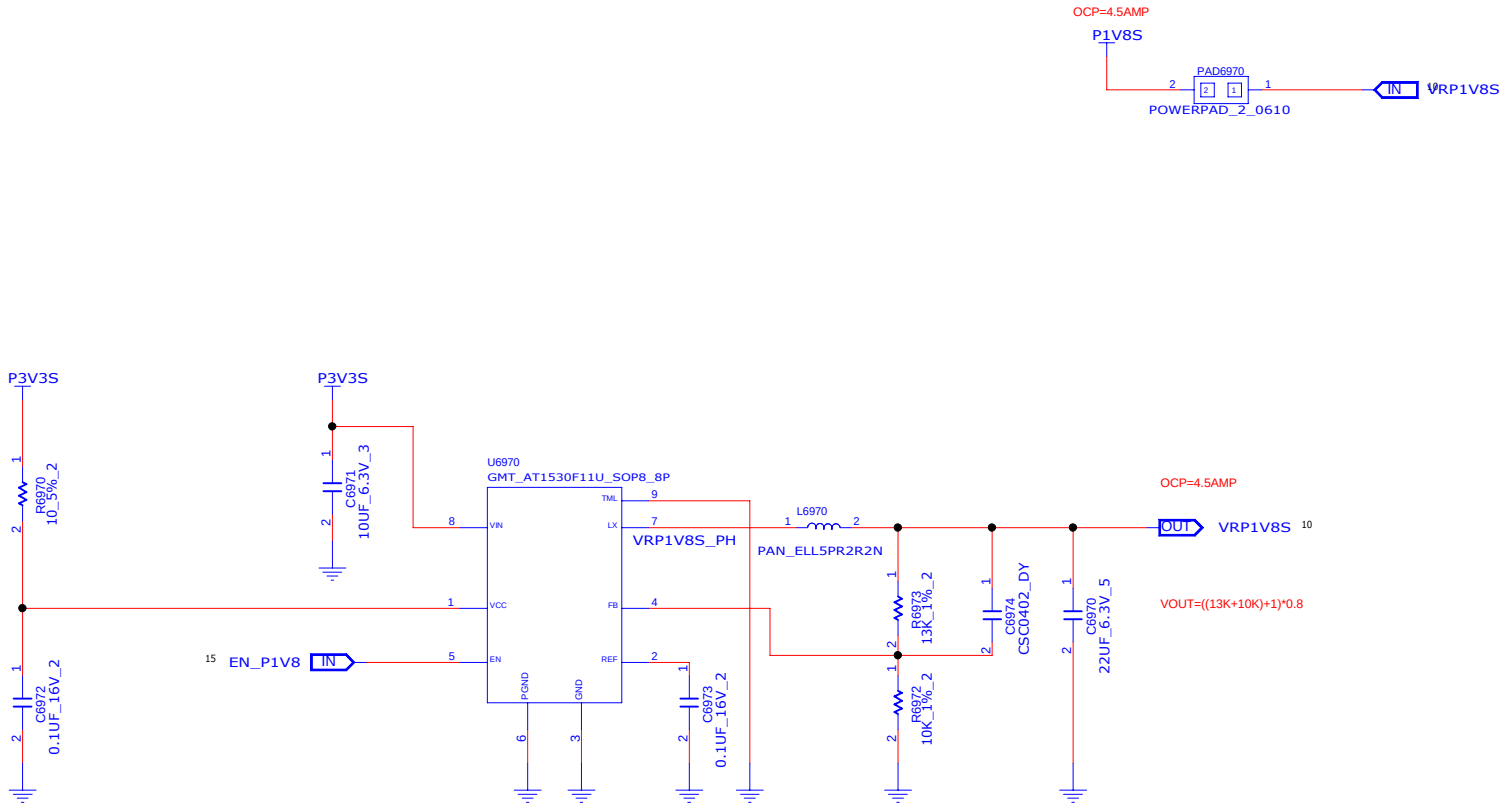

INVENTEC

TITLE
MODEL,PROJECT,FUNCTION
P1V8S

SIZE	CODE	DOC.NUMBER	REV
A3	CS	1310xxxxx-0-0	X01

CHANGE by XXX | DATE 21-OCT-2002 | SHEET 10 of 57

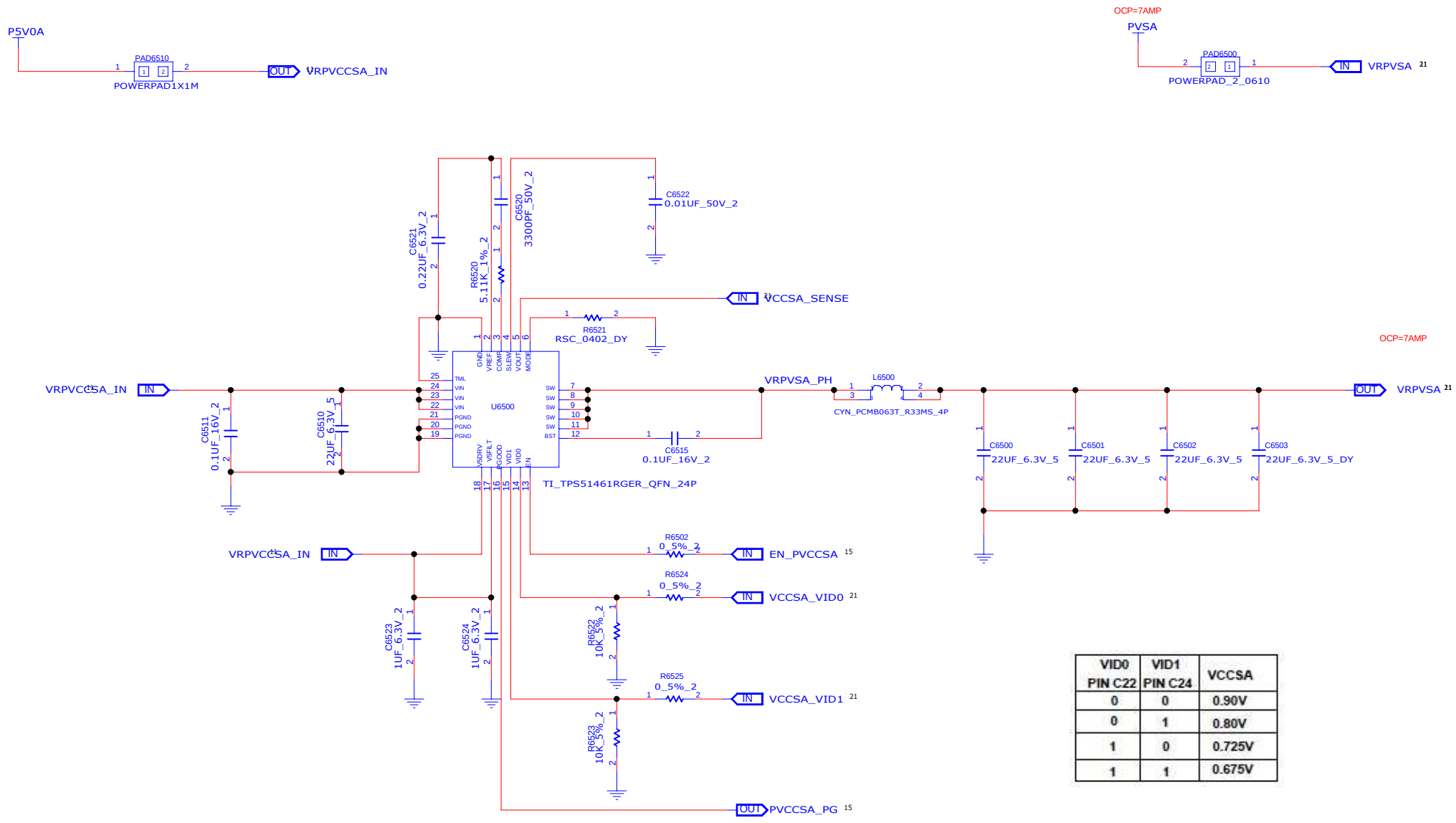

VID0 PIN C22	VID1 PIN C24	VCCSA
0	0	0.90V
0	1	0.80V
1	0	0.725V
1	1	0.675V

INVENTEC

TITLE
MODEL,PROJECT,FUNCTION
PVSA

SIZE	CODE	DOC.NUMBER	REV
A3	CS	1310xxxxx-0-0	X01

CHANGE by XXX DATE 21-OCT-2002 SHEET 11 of 57

	2+1	2+0
R6626	3.3K	DNP
R6627	56K	DNP
R6711	200K	DNP
R6712	30K	DNP
R6714	DNP	0
R6716	DNP	0
R6719	DNP	0
R6723	DNP	0

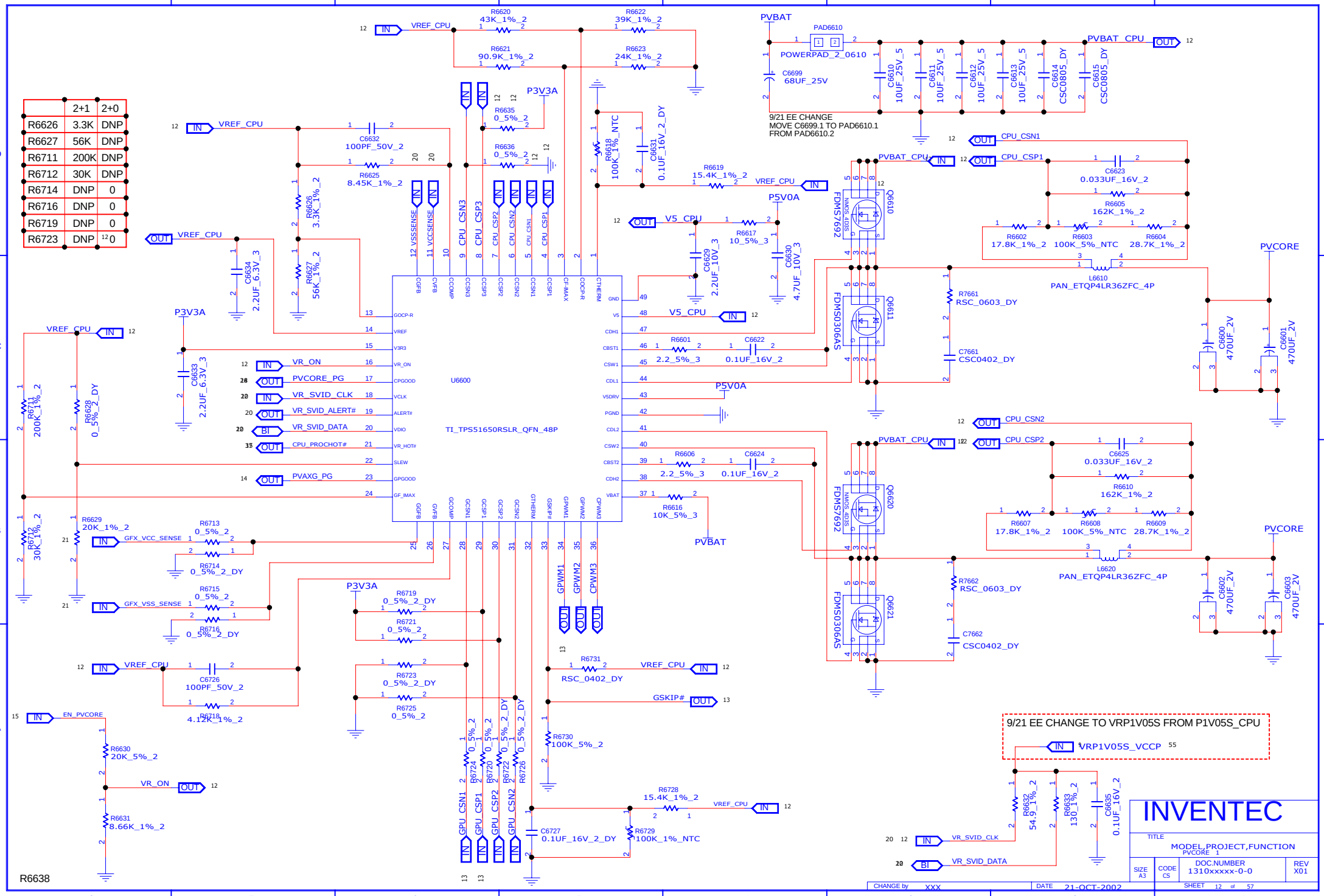

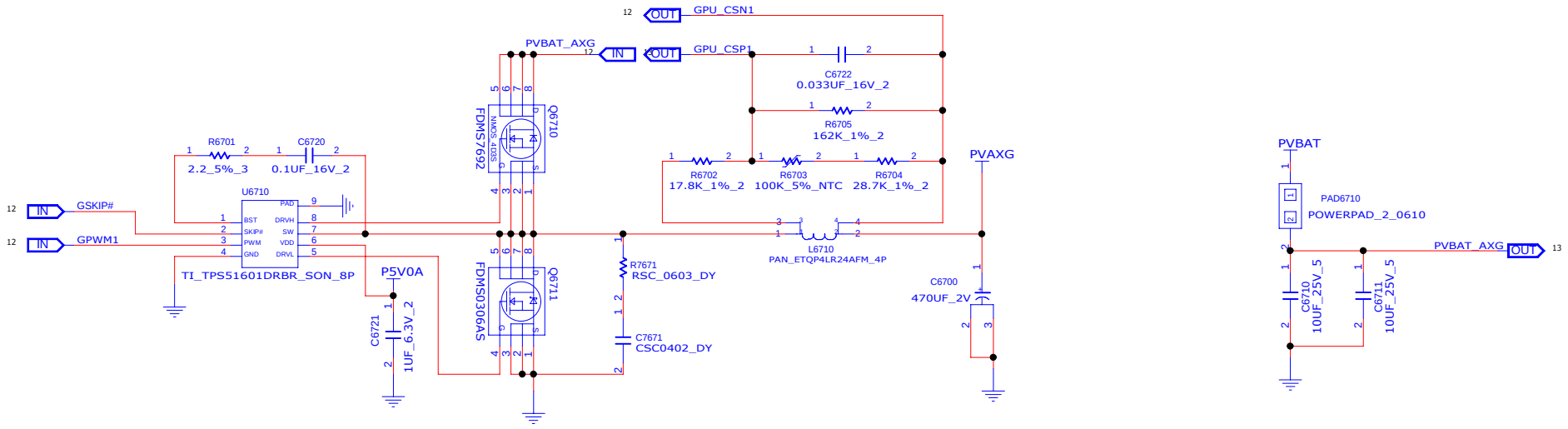

INVENTEC

TITLE
MODEL,PROJECT,FUNCTION
PVCORE 2

SIZE	CODE	DOC.NUMBER	REV
A3	CS	1310xxxxx-0-0	X01

CHANGE by XXX DATE 21-OCT-2002 SHEET 13 of 57

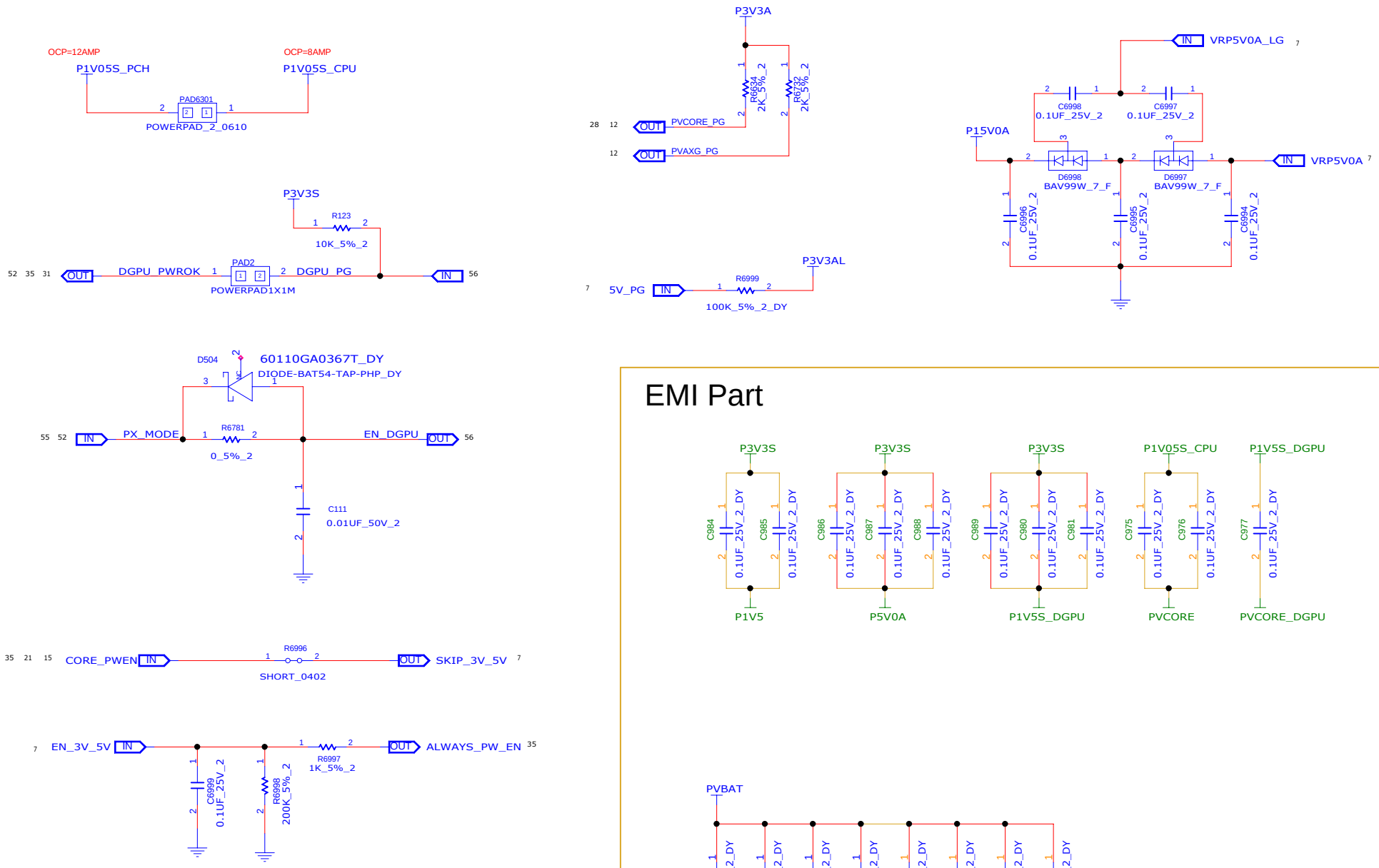

EMI Part

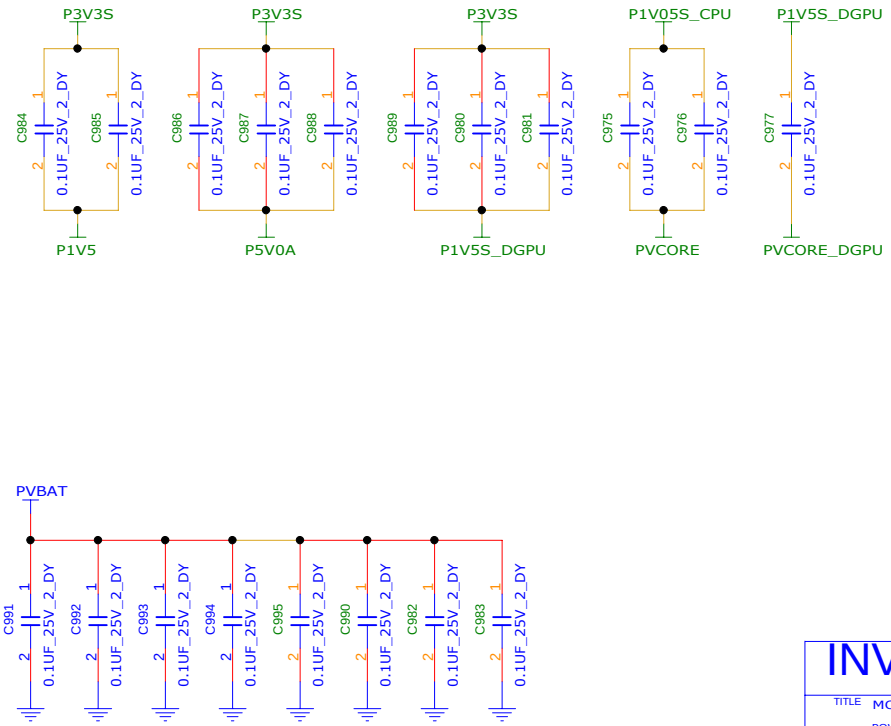

INVENTEC

TITLE	MODEL,PROJECT,FUNCTION POWER TO EE PORT & EMI PART		
SIZE A3	CODE CS	DOC.NUMBER 1310xxxxx-0-0	REV X01
CHANGE by XXX	DATE 21-OCT-2002	SHEET 14 of 57	

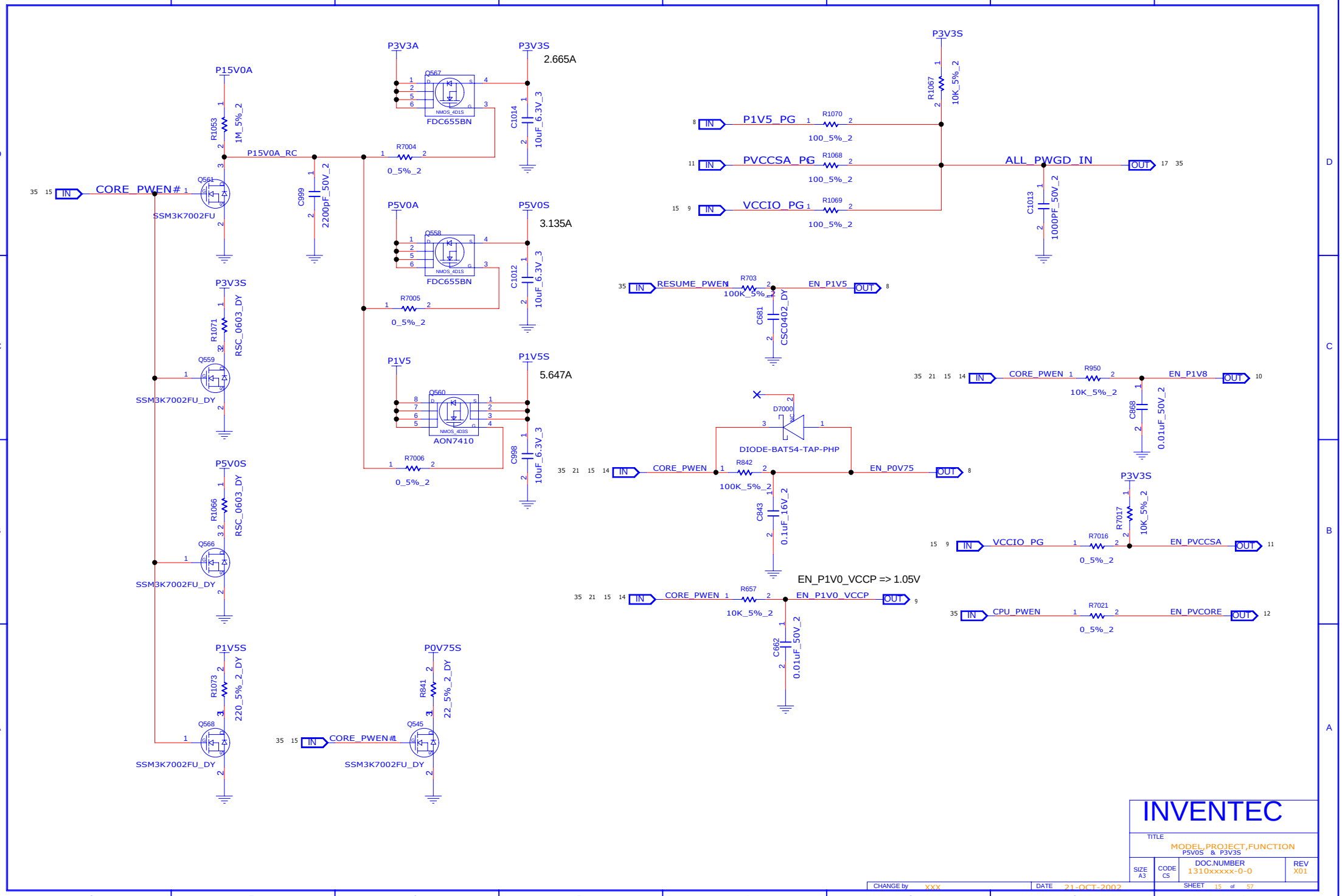
P15V0A
R1053
1M_5%_2
P15V0A_RC
CORE_PWEN#
Q561
SSM3K7002FU
C999
2200pF_50V_2
P3V3A
P3V3S
2.665A
Q567
FDC655BN
C1014
10uF_6.3V_3
R7004
0_5%_2
P5V0A
P5V0S
3.135A
Q558
FDC655BN
C1012
10uF_6.3V_3
R7005
0_5%_2
P1V5
P1V5S
5.647A
Q560
AON7410
C998
10uF_6.3V_3
R7006
0_5%_2
P3V3S
R1071
RSC_0603_DY
Q559
SSM3K7002FU_DY
P5V0S
R1066
RSC_0603_DY
Q566
SSM3K7002FU_DY
P1V5S
R1073
220_5%_2_DY
Q568
SSM3K7002FU_DY
P0V75S
R841
22_5%_2_DY
Q545
SSM3K7002FU_DY
CORE_PWEN#
P3V3S
R1067
10K_5%_2
P1V5_PG
R1070
100_5%_2
PVCCSA_PG
R1068
100_5%_2
VCCIO_PG
R1069
100_5%_2
ALL_PWGD_IN
C1013
1000PF_50V_2
RESUME_PWEN
R703
100K_5%_2
EN_P1V5
C681
CSC0402_DY
D7000
DIODE-BAT54-TAP-PHP
CORE_PWEN
R842
100K_5%_2
EN_P0V75
C843
0.1uF_16V_2
CORE_PWEN
R950
10K_5%_2
EN_P1V8
C868
0.01uF_50V_2
P3V3S
R7017
10K_5%_2
VCCIO_PG
R7016
0_5%_2
EN_PVCCSA
EN_P1V0_VCCP => 1.05V
CORE_PWEN
R657
10K_5%_2
EN_P1V0_VCCP
C662
0.01uF_50V_2
CPU_PWEN
R7021
0_5%_2
EN_PVCORE
INVENTEC
TITLE
MODEL,PROJECT,FUNCTION
P5V0S & P3V3S
SIZE A3
CODE CS
DOC.NUMBER 1310xxxxx-0-0
REV X01
CHANGE by XXX
DATE 21-OCT-2002
SHEET 15 of 57

Green CLK

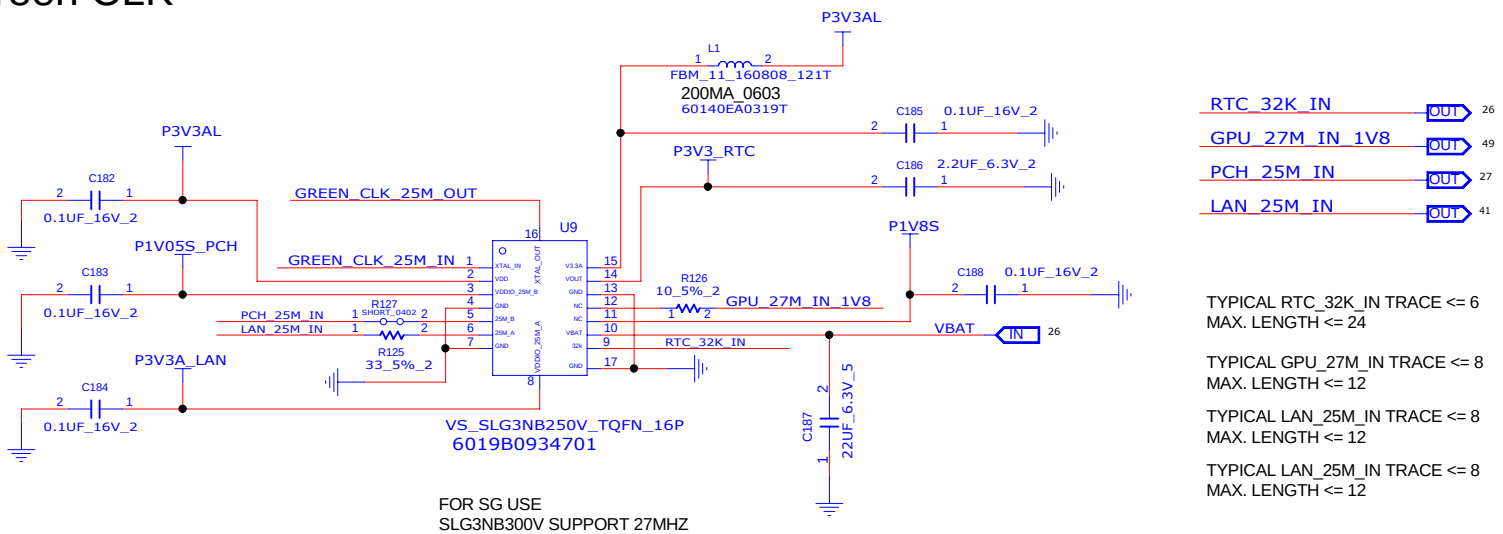

TYPICAL RTC_32K_IN TRACE <= 6
MAX. LENGTH <= 24

TYPICAL GPU_27M_IN TRACE <= 8
MAX. LENGTH <= 12

TYPICAL LAN_25M_IN TRACE <= 8
MAX. LENGTH <= 12

TYPICAL LAN_25M_IN TRACE <= 8
MAX. LENGTH <= 12

FOR SG USE
SLG3NB300V SUPPORT 27MHZ
P/N : 6019B0941101

FOR UMA USE
SLG3NB250V
P/N : 6019B0934701

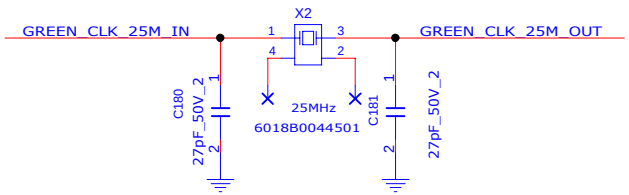

FOR UMA
U9 : 6019B0934701
R126 : NA
C188 : NA

FOR SG
U9 : SLG3NB300V P/N APPLY
R126 : MOUNT
C188 : MOUNT

IF USE U9 (SLG3NB250V)

MOUNT	OPEN (PAGE26)	OPEN (PAGE41)
X2	D4400	X400
R1	X501	C402
L1	R958	C403
C180	C874	
C181	C875	
C182		
C183	OPEN (PAGE27)	OPEN (PAGE49)
C184	X503	X1
C185	R1041	R29
C186	C962	C35
C187	C965	C36
R906 (PAGE26)		
R912 (PAGE27)		
R414 (PAGE41)		
R120 (PAGE49)		

INVENTEC

TITLE MODEL,PROJECT,FUNCTION
GREEN CLK SLG3NB250

SIZE	CODE	DOC.NUMBER	REV
A3	CS	1310xxxxx-0-0	X01

CHANGE by XXX DATE 21-OCT-2002 SHEET 16 of 57

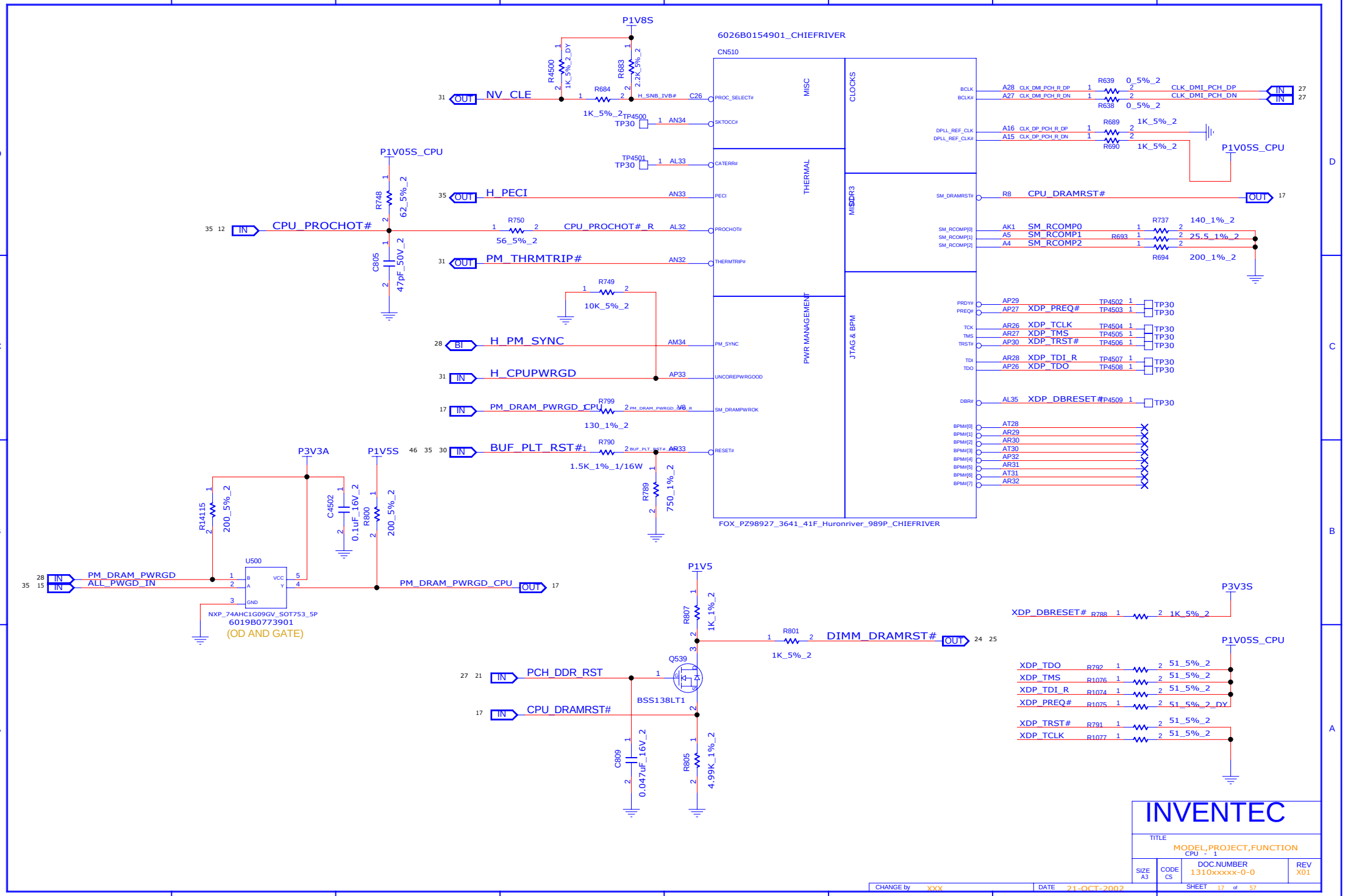
P1V8S
6026B0154901_CHIEFRIVER
CN510
MISC
CLOCKS
THERMAL
MISC
DDR3
PWR MANAGEMENT
JTAG & BPM
NV_CLE
H_SNB_IVB#
C26
PROC_SELECT#
SKTOCC#
AN34
CATERR#
AL33
PECI
AN33
H_PECI
PROCHOT#
AL32
CPU_PROCHOT#_R
CPU_PROCHOT#
THERMTRIP#
AN32
PM_THRMTRIP#
PM_SYNC
AM34
H_PM_SYNC
UNCOREPWRGOOD
AP33
H_CPUPWRGD
SM_DRAMPWROK
PM_DRAM_PWRGD_CPU
RESET#
AR33
BUF_PLT_RST#
FOX_PZ98927_3641_41F_Huronriver_989P_CHIEFRIVER
BCLK
BCLK#
A28 CLK_DMI_PCH_R_DP
A27 CLK_DMI_PCH_R_DN
CLK_DMI_PCH_DP
CLK_DMI_PCH_DN
DPLL_REF_CLK
DPLL_REF_CLK#
A16 CLK_DP_PCH_R_DP
A15 CLK_DP_PCH_R_DN
P1V05S_CPU
SM_DRAMRST#
R8 CPU_DRAMRST#
SM_RCOMP[0]
SM_RCOMP[1]
SM_RCOMP[2]
AK1 SM_RCOMP0
A5 SM_RCOMP1
A4 SM_RCOMP2
140_1%_2
25.5_1%_2
200_1%_2
PRDY#
PREQ#
AP29
AP27 XDP_PREQ#
TCK
TMS
TRST#
AR26 XDP_TCLK
AR27 XDP_TMS
AP30 XDP_TRST#
TDI
TDO
AR28 XDP_TDI_R
AP26 XDP_TDO
DBR#
AL35 XDP_DBRESET#
BPM#[0]
BPM#[1]
BPM#[2]
BPM#[3]
BPM#[4]
BPM#[5]
BPM#[6]
BPM#[7]
AT28
AR29
AR30
AT30
AP32
AR31
AT31
AR32
P1V05S_CPU
R748 62_5%_2
C805 47pF_50V_2
R750 56_5%_2
R749 10K_5%_2
R799 130_1%_2
R790 1.5K_1%_1/16W
R789 750_1%_2
P3V3A
P1V5S
R14115 200_5%_2
C4502 0.1uF_16V_2
R800 200_5%_2
U500
PM_DRAM_PWRGD
ALL_PWGD_IN
PM_DRAM_PWRGD_CPU
NXP_74AHC1G09GV_SOT753_5P
6019B0773901
(OD AND GATE)
P1V5
R807 1K_1%_2
R801 1K_5%_2
DIMM_DRAMRST#
Q539
BSS138LT1
PCH_DDR_RST
CPU_DRAMRST#
C809 0.047uF_16V_2
R805 4.99K_1%_2
P3V3S
XDP_DBRESET# R788 1K_5%_2
P1V05S_CPU
XDP_TDO R792 51_5%_2
XDP_TMS R1076 51_5%_2
XDP_TDI_R R1074 51_5%_2
XDP_PREQ# R1075 51_5%_2_DY
XDP_TRST# R791 51_5%_2
XDP_TCLK R1077 51_5%_2
INVENTEC
TITLE
MODEL,PROJECT,FUNCTION
CPU - 1
SIZE A3
CODE CS
DOC.NUMBER 1310xxxxx-0-0
REV X01
CHANGE by XXX
DATE 21-OCT-2002
SHEET 17 of 57

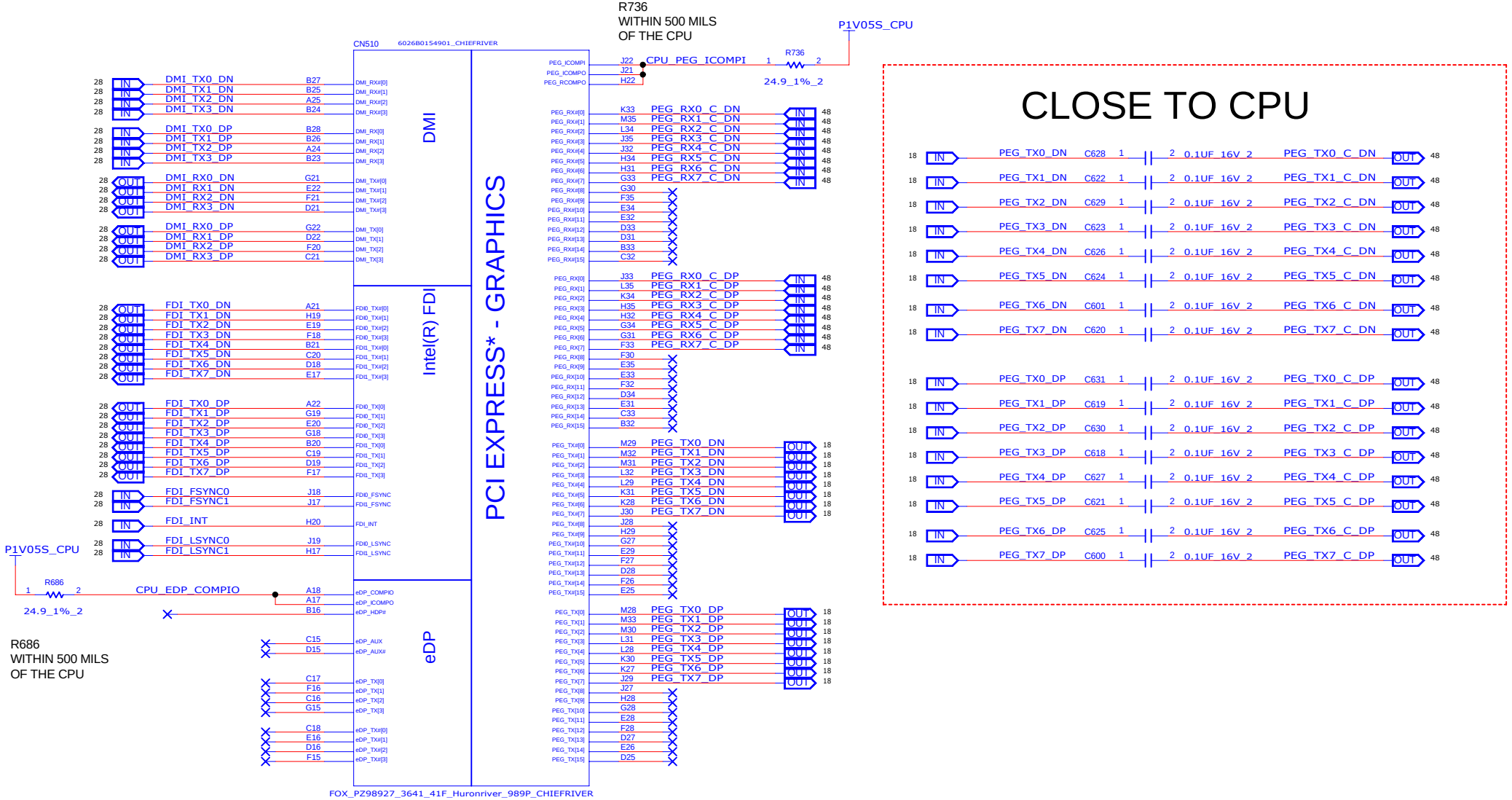

INVENTEC

TITLE
MODEL,PROJECT,FUNCTION
CPU - 2

SIZE	CODE	DOC.NUMBER	REV
A3	CS	1310xxxxx-0-0	X01

CHANGE by XXX DATE 21-OCT-2002 SHEET 18 of 57

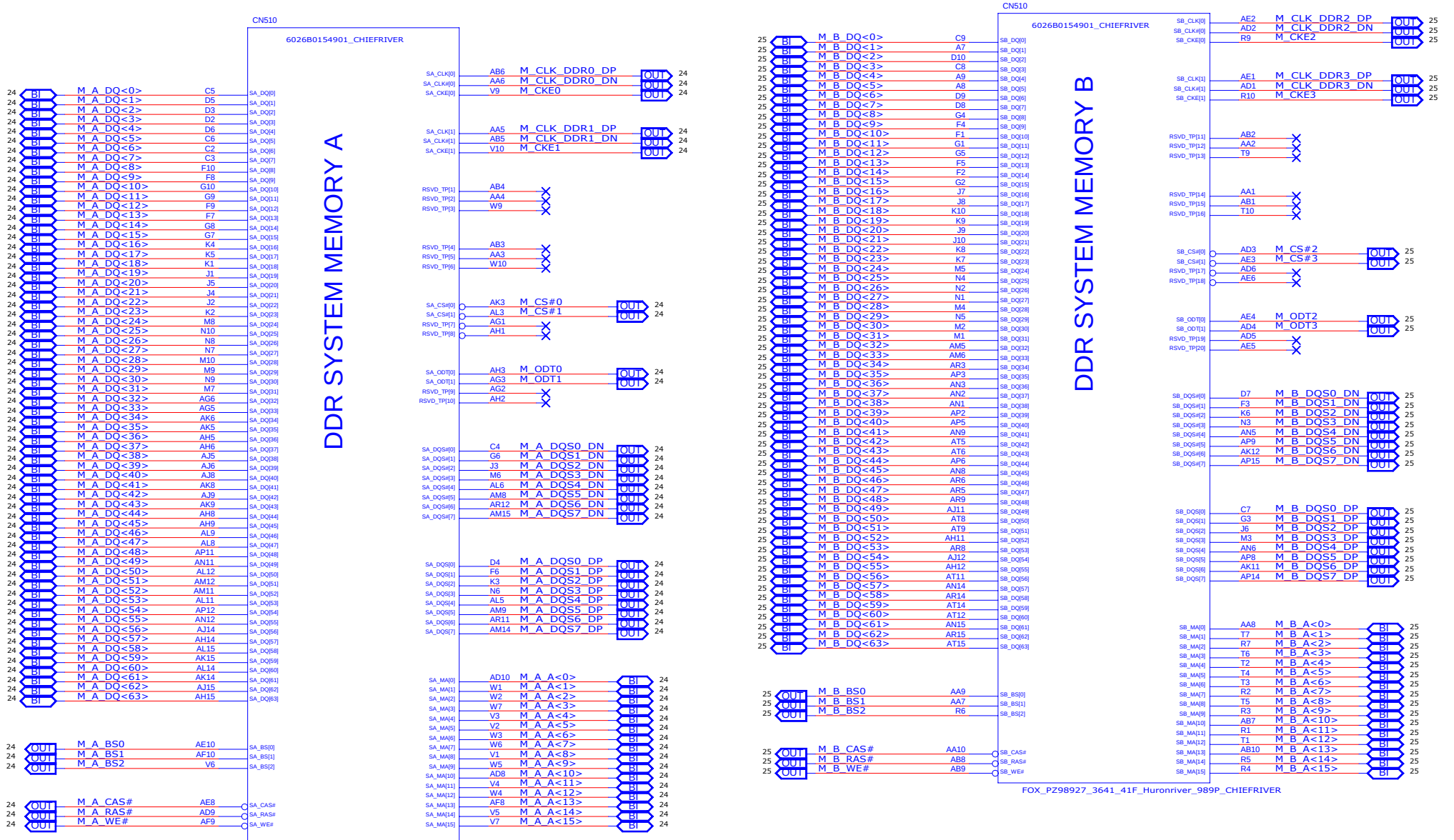

INVENTEC

TITLE

MODEL,PROJECT,FUNCTION

CPU - 3

SIZE	CODE	DOC.NUMBER	REV
A3	CS	1310xxxxx-0-0	X01

CHANGE by XXX DATE 21-OCT-2002 SHEET 19 of 57

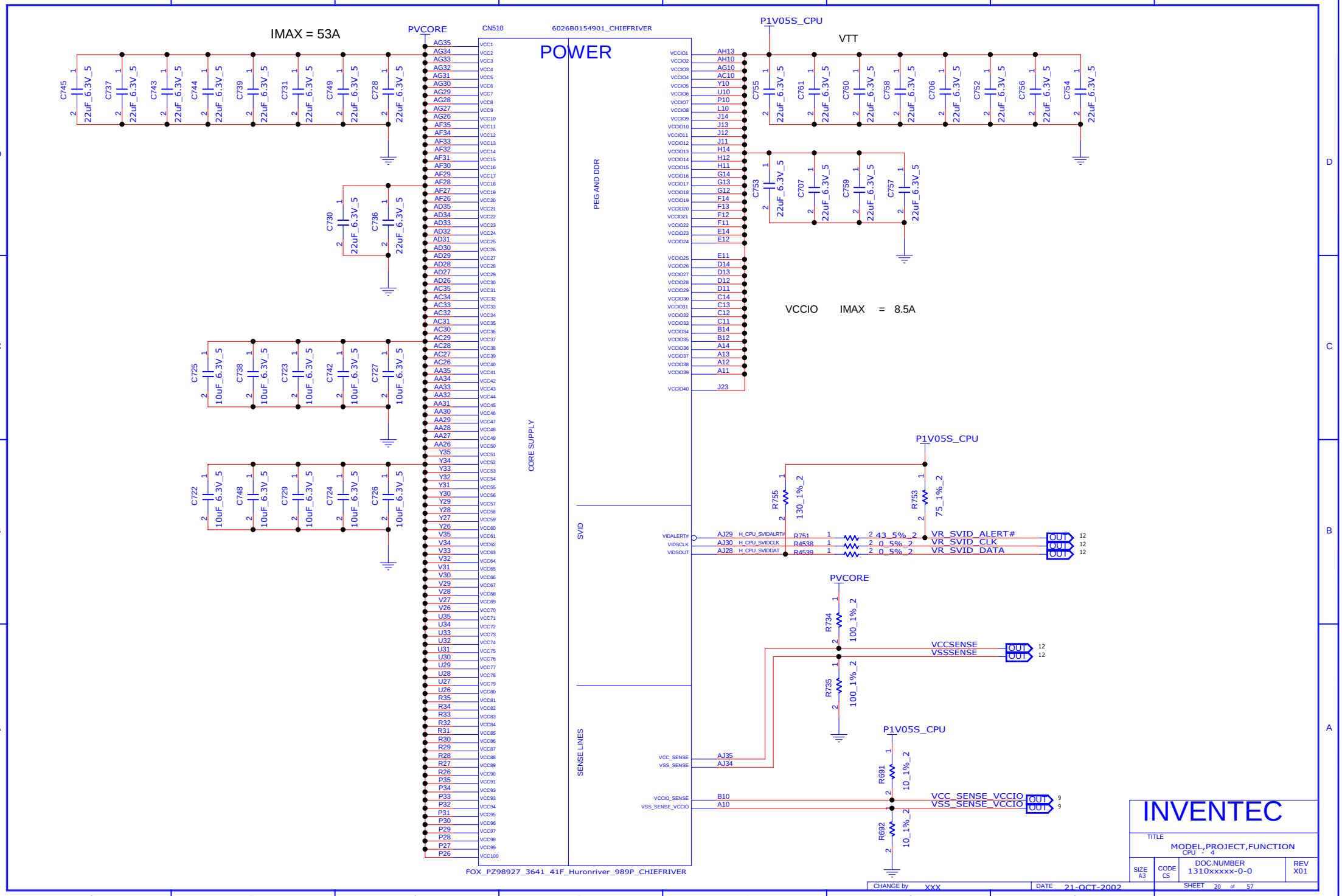
IMAX = 53A
PVCORE
CN510
6026B0154901_CHIEFRIVER
POWER
P1V05S_CPU
VTT
VCCIO IMAX = 8.5A
PEG AND DDR
CORE SUPPLY
SVID
SENSE LINES
VIDALERT#
VIDSCLK
VIDSOUT
VCC_SENSE
VSS_SENSE
VCCIO_SENSE
VSS_SENSE_VCCIO
H_CPU_SVIDALRT#
H_CPU_SVIDCLK
H_CPU_SVIDDAT
VR_SVID_ALERT#
VR_SVID_CLK
VR_SVID_DATA
VCCSENSE
VSSSENSE
VCC_SENSE_VCCIO
VSS_SENSE_VCCIO
FOX_PZ98927_3641_41F_Huronriver_989P_CHIEFRIVER
INVENTEC
TITLE
MODEL,PROJECT,FUNCTION
CPU - 4
SIZE A3
CODE CS
DOC.NUMBER 1310xxxxx-0-0
REV X01
CHANGE by XXX
DATE 21-OCT-2002
SHEET 20 of 57

SANDY BRIDGE + IVY BRIDGE COMPTIBILITY DG 2.5.17.1

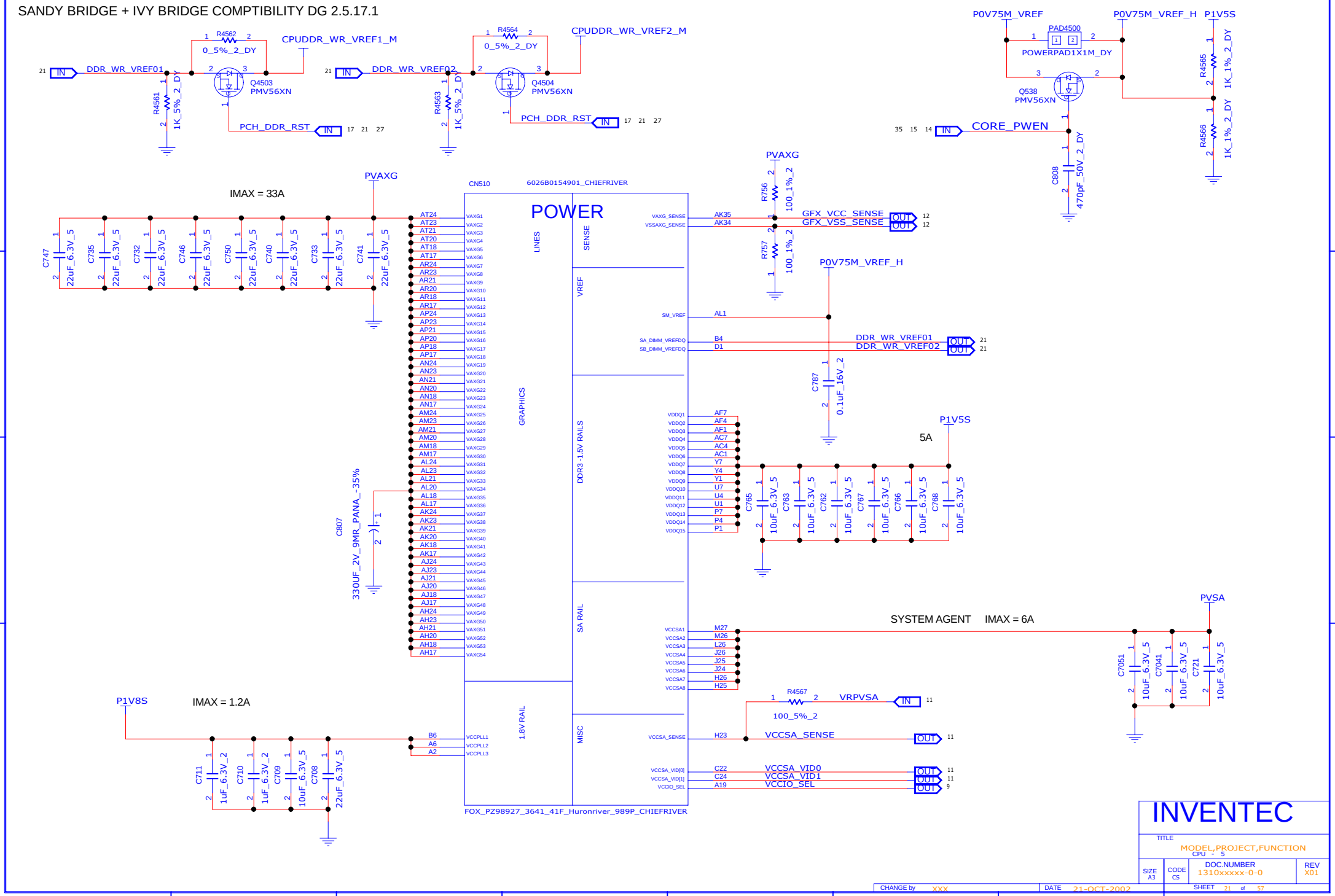

INVENTEC

TITLE MODEL,PROJECT,FUNCTION

CPU - 5

SIZE	CODE	DOC.NUMBER	REV
A3	CS	1310xxxxx-0-0	X01

CHANGE by XXX DATE 21-OCT-2002 SHEET 21 of 57

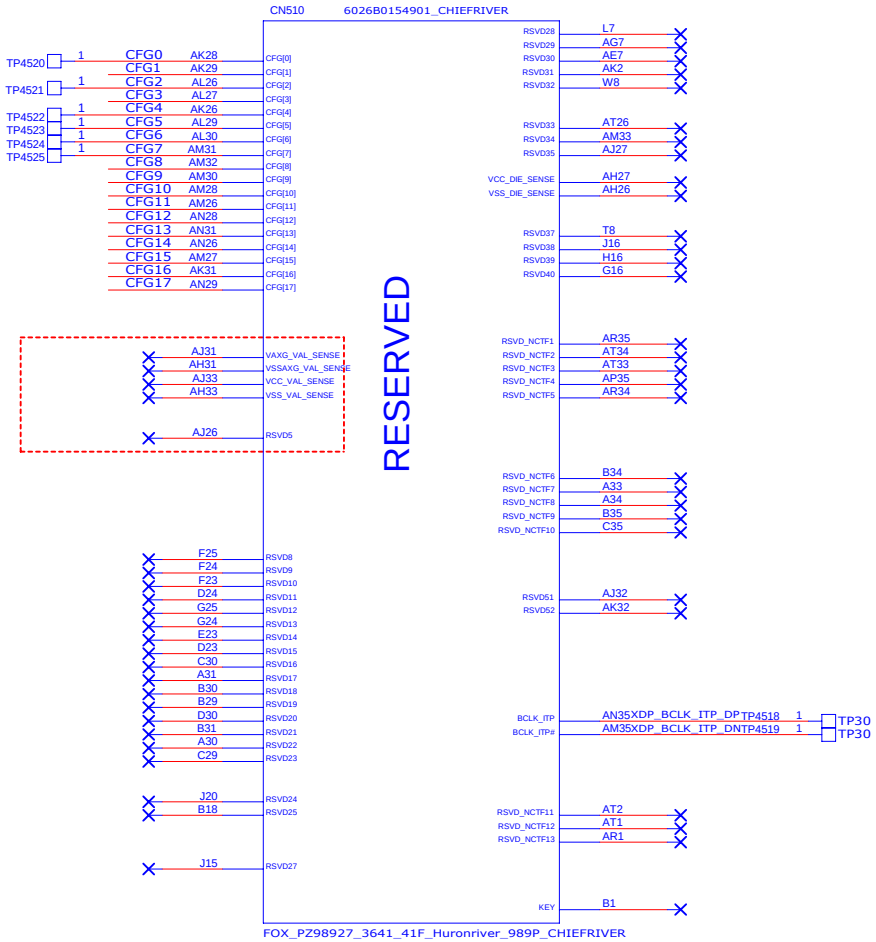

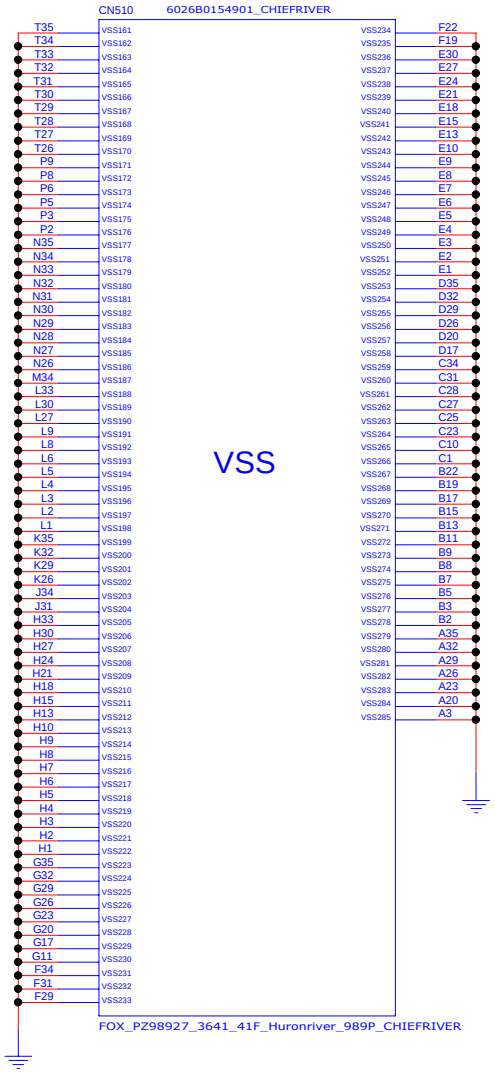

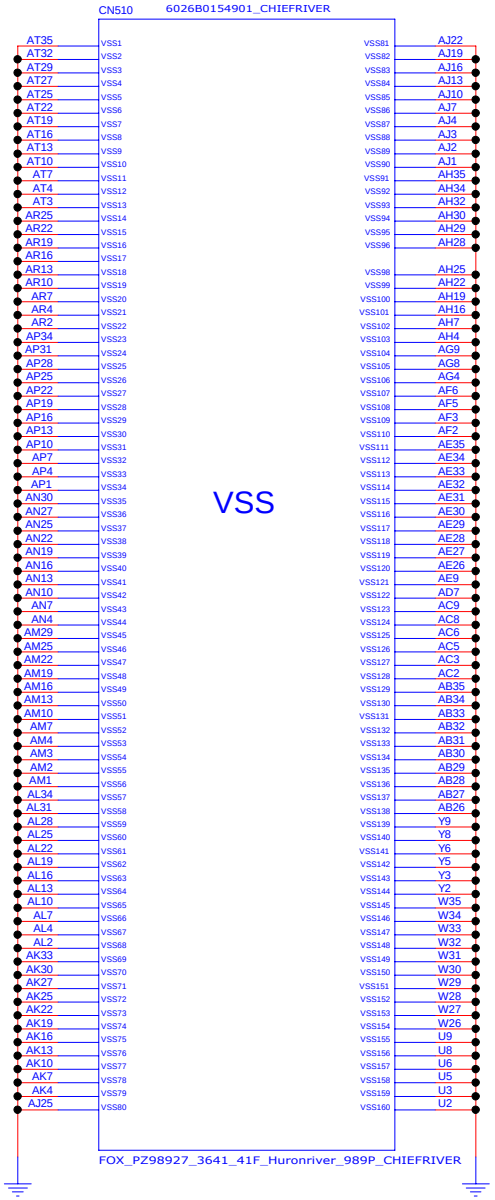

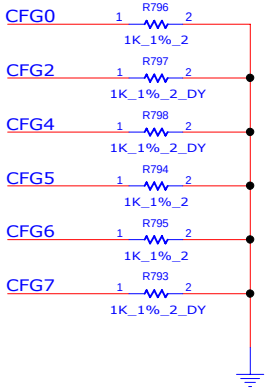

CFG[2] : PCI Express* Static x16 Lane Numbering Reversal.
1 = Normal operation
0 = Lane numbers reversed

CFG[4] : eDP enable
1 = Disabled
0 = Enabled

CFG[6:5] : PCI Express Bifurcation:
00 = 1 x8, 2 x4 PCI Expres
01 = reserved
10 = 2 x8 PCI Express
11 = 1 x16 PCI Express

CFG[7] :PEG DEFER TRAINING
1: (Default) PEG Train immediately following RESETB deassertion
0: PEG Wait for BIOS for training

INVENTEC

TITLE
MODEL,PROJECT,FUNCTION
CPU - 6

SIZE	CODE	DOC.NUMBER	REV
A3	CS	1310xxxxx-0-0	X01

CHANGE by XXX DATE 21-OCT-2002 SHEET 22 of 57

FAN CONN

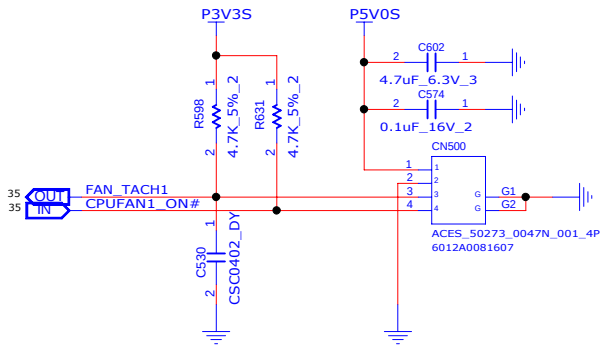

7.2.5 Register : Local Diode Temperature Alert Temperature

Location : Read = Address 05h Write = Address 0Bh

Type : Read/Write

Power on default value : Hardware strapping.

BIT	7	6	5	4	3	2	1	0
NAME	LDT Alert Temperature							
VALUE	SIGN	64	32	16	8	4	2	1
DEFAULT	Hardware strapping							

6.6 ALERT# point hardware power-on setting

The default value could be set after power up 100ms by different pull-up resistor of ALERT# pin:

PULL-UP RESISTOR		TEMPERATURE (℃)
ALERT	2KΩ	75
	7.5KΩ	90
	10.5KΩ	100
	14KΩ	105
	18.7KΩ	110

THERMAL SENSOR(LOCAL)

NCT7717U I2C / SMBus address is 1001000xb (x is R/W bit).

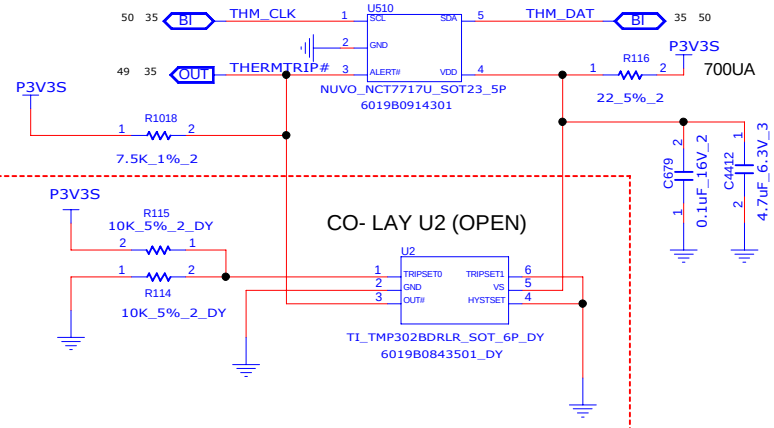

TMP302 Available Versions(1)

DEVICE	SELECTABLE TRIP POINTS (℃)
TMP302A	50, 55, 60, 65
TMP302B	70, 75, 80, 85
TMP302C	90, 95, 100, 105
TMP302D	110, 115, 120, 125

(1) For other available trip points, please contact a TI representative.

Table 1. Trip Point vs $TRIP_{SET1}$ and $TRIP_{SET0}$

$TRIP_{SET1}$	$TRIP_{SET0}$	TMP302A	TMP302B	TMP302C	TMP302D
GND	GND	+50°C	+70°C	+90°C	+110°C
GND	V_S	+55°C	+75°C	+95°C	+115°C
V_S	GND	+60°C	+80°C	+100°C	+120°C
V_S	V_S	+65°C	+85°C	+105°C	+125°C

Table 2. $HYST_{SET}$ Window

$HYST_{SET}$	THRESHOLD HYSTERESIS
GND	+5°C
V_S	+10°C

INVENTEC

TITLE MODEL,PROJECT,FUNCTION
THERMAL & FAN

SIZE	CODE	DOC.NUMBER	REV
A3	CS	1310xxxxx-0-0	X01

CHANGE by XXX DATE 21-OCT-2002 SHEET 23 of 57

DDR3 (8mm) P/N : 6026B0221101

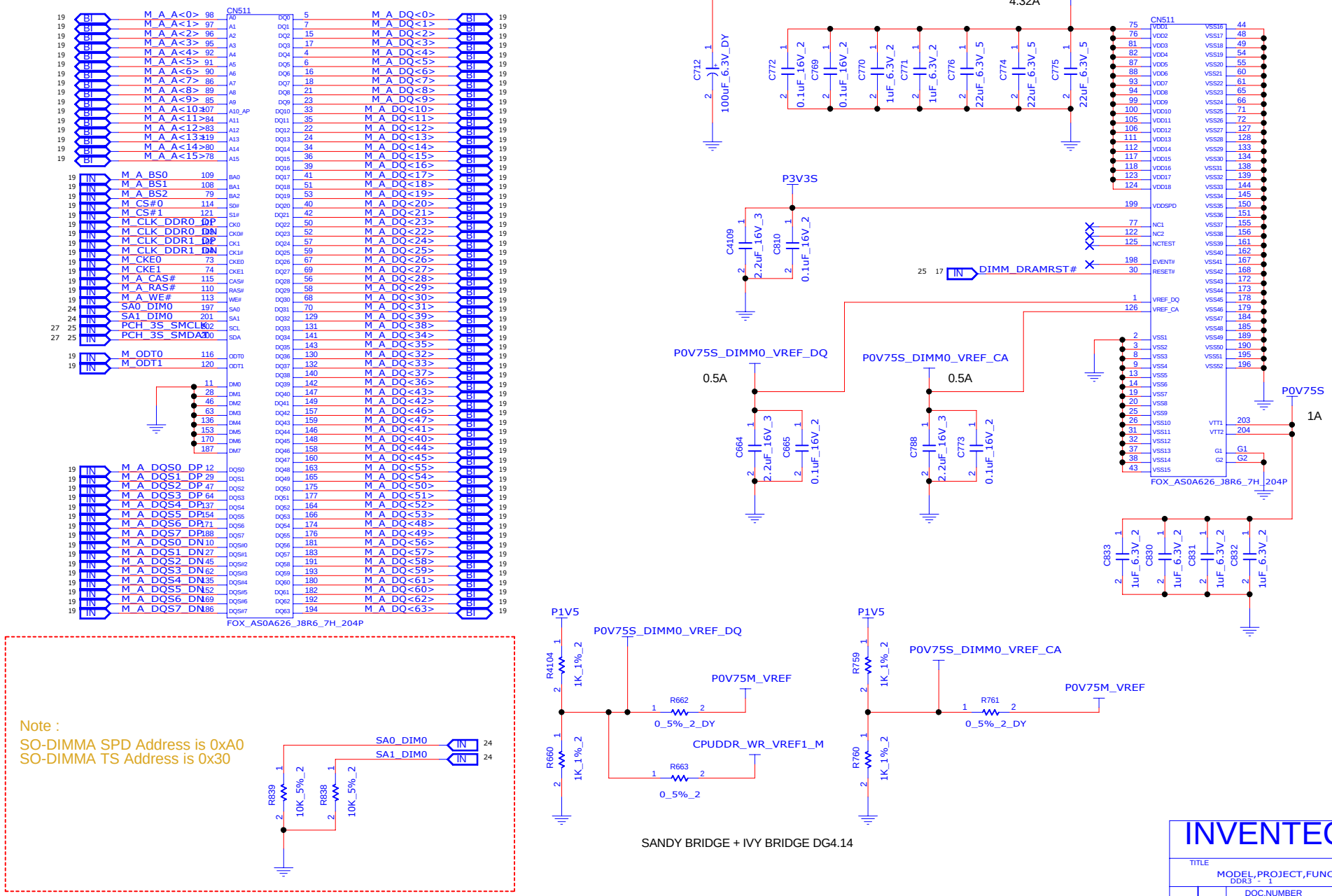

SANDY BRIDGE + IVY BRIDGE DG4.14

INVENTEC

TITLE MODEL,PROJECT,FUNCTION
DDR3 - 1

SIZE	CODE	DOC.NUMBER	REV
A3	CS	1310xxxxx-0-0	X01

CHANGE by XXX DATE 21-OCT-2002 SHEET 24 of 57

DDR3 (4mm) P/N : 6026B0221601

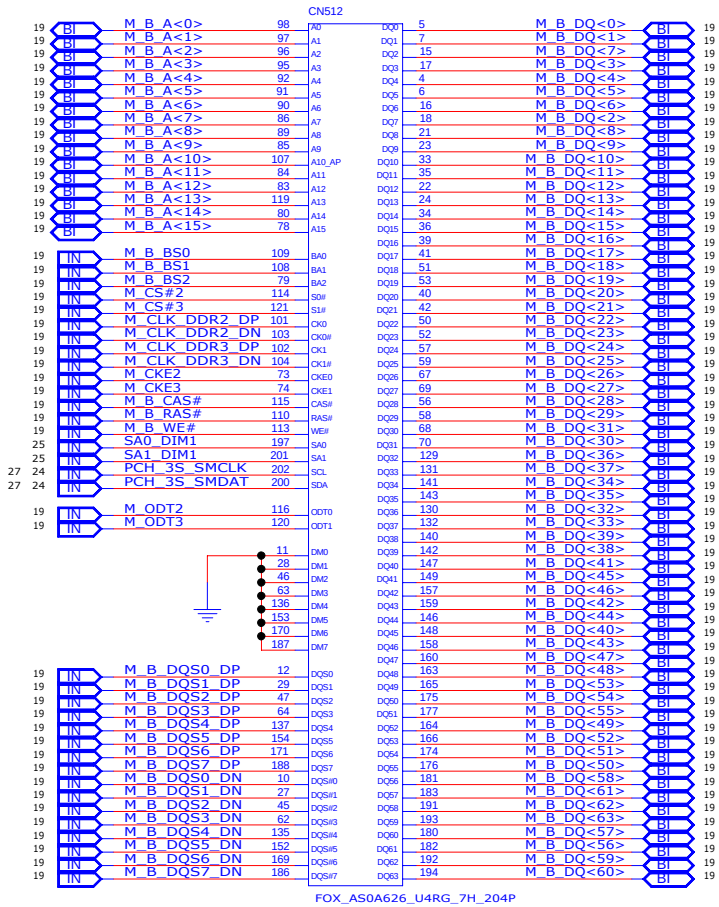

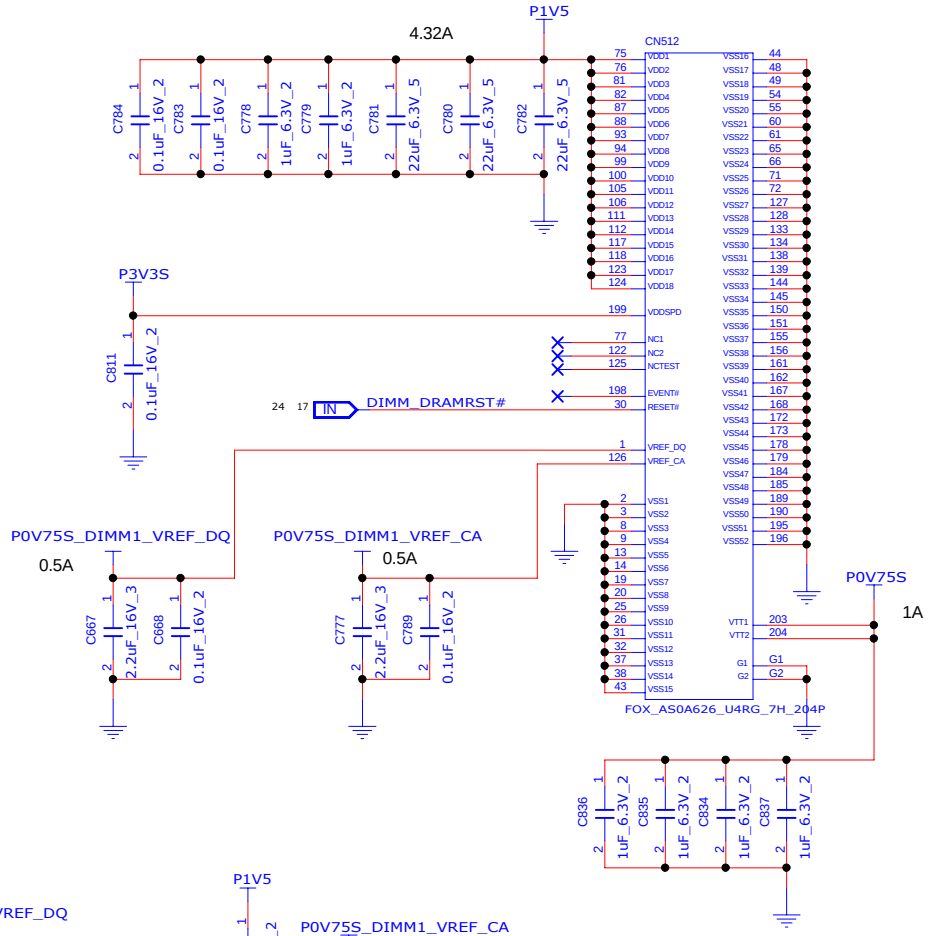

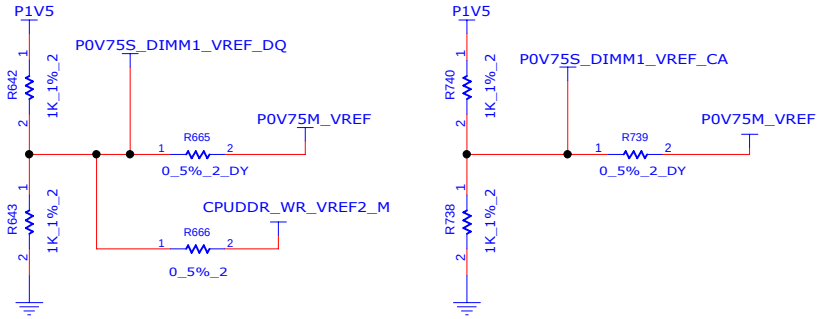

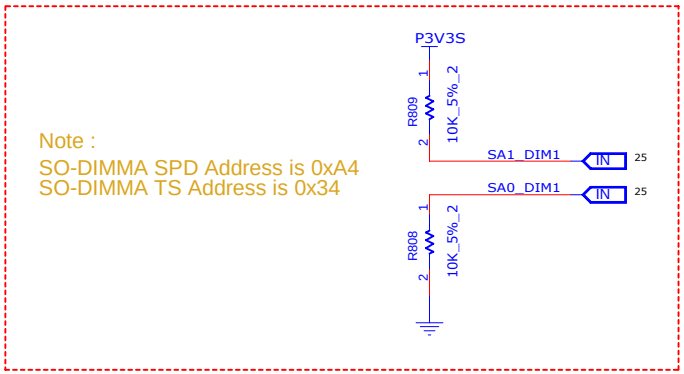

SANDY BRIDGE + IVY BRIDGE DG4.14

INVENTEC

TITLE MODEL,PROJECT,FUNCTION
DDR3 - 2

SIZE	CODE	DOC.NUMBER	REV
A3	CS	1310xxxxx-0-0	X01

CHANGE by XXX DATE 21-OCT-2002 SHEET 25 of 57

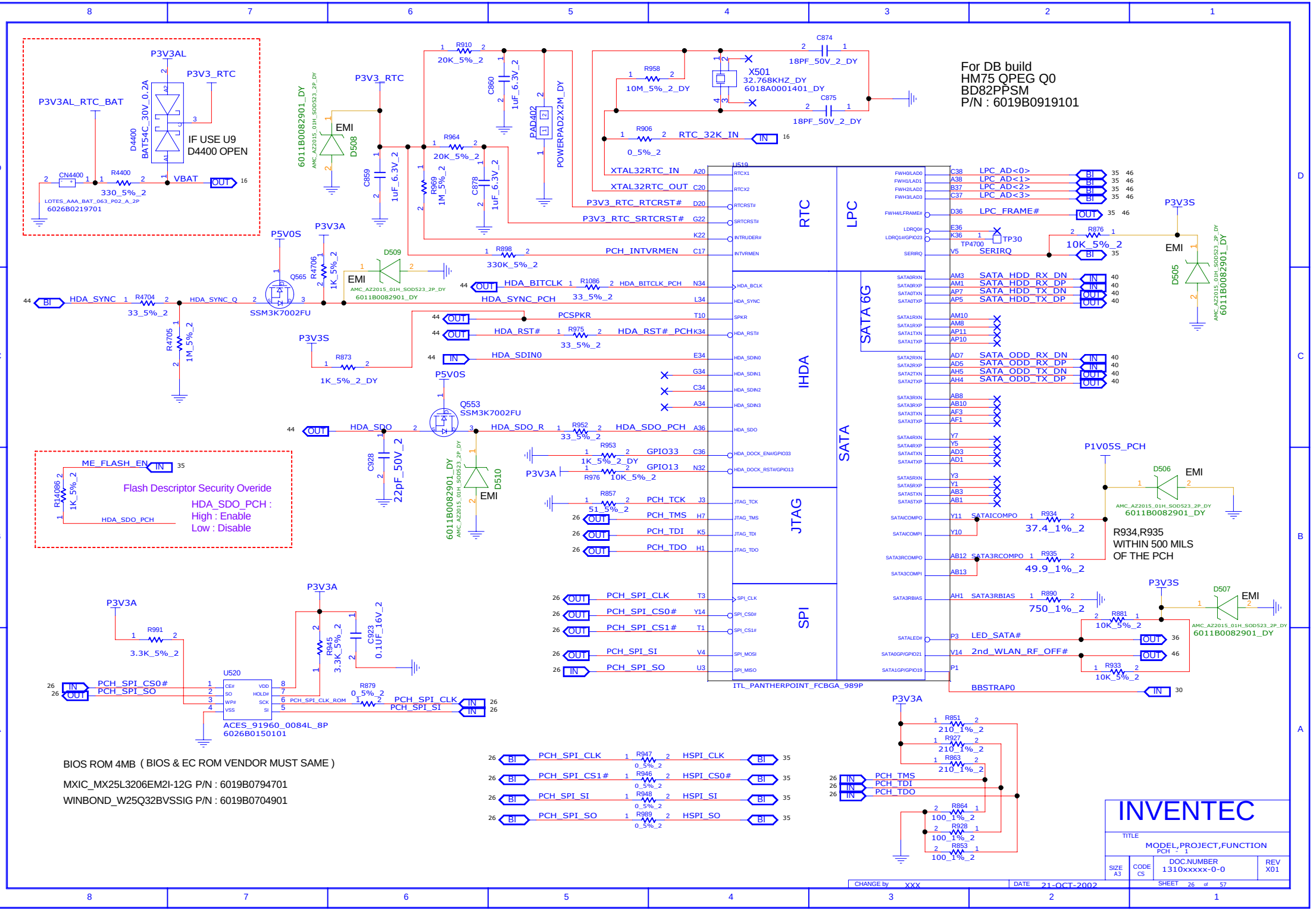
For DB build
HM75 QPEG Q0
BD82PPSM
P/N : 6019B0919101
P3V3AL_RTC_BAT
P3V3AL
P3V3_RTC
D4400
BAT54C_30V_0.2A
IF USE U9
D4400 OPEN
CN4400
R4400
330_5%_2
VBAT
LOTES_AAA_BAT_063_P02_A_2P
6026B0219701
6011B0082901_DY
EMI
D508
R910
20K_5%_2
C860
1uF_6.3V_2
PAD402
POWERPAD2X2M_DY
R964
20K_5%_2
C859
1uF_6.3V_2
R969
1M_5%_2
C878
1uF_6.3V_2
R958
10M_5%_2_DY
X501
32.768KHZ_DY
6018A0001401_DY
C874
18PF_50V_2_DY
C875
18PF_50V_2_DY
R906
0_5%_2
RTC_32K_IN
XTAL32RTC_IN
XTAL32RTC_OUT
P3V3_RTC_RTCRST#
P3V3_RTC_SRTCRST#
PCH_INTVRMEN
R898
330K_5%_2
D509
P5V0S
P3V3A
Q565
R4706
1K_5%_2
HDA_SYNC
R4704
33_5%_2
HDA_SYNC_Q
SSM3K7002FU
R4705
1M_5%_2
HDA_BITCLK
R1086
33_5%_2
HDA_BITCLK_PCH
HDA_SYNC_PCH
PCSPKR
HDA_RST#
R975
33_5%_2
HDA_RST#_PCH
P3V3S
R873
1K_5%_2_DY
HDA_SDIN0
P5V0S
Q553
SSM3K7002FU
HDA_SDO
HDA_SDO_R
R952
33_5%_2
HDA_SDO_PCH
C928
22pF_50V_2
D510
R953
1K_5%_2_DY
GPIO33
GPIO13
R976
10K_5%_2
R857
51_5%_2
PCH_TCK
PCH_TMS
PCH_TDI
PCH_TDO
ME_FLASH_EN
R14086
1K_5%_2
HDA_SDO_PCH
Flash Descriptor Security Overide
HDA_SDO_PCH :
High : Enable
Low : Disable
U519
RTC
LPC
SATA 6G
IHDA
SATA
JTAG
SPI
ITL_PANTHERPOINT_FCBGA_989P
LPC_AD<0>
LPC_AD<1>
LPC_AD<2>
LPC_AD<3>
LPC_FRAME#
TP4700
TP30
SERIRQ
10K_5%_2
SATA_HDD_RX_DN
SATA_HDD_RX_DP
SATA_HDD_TX_DN
SATA_HDD_TX_DP
SATA_ODD_RX_DN
SATA_ODD_RX_DP
SATA_ODD_TX_DN
SATA_ODD_TX_DP
SATAICOMPO
SATAICOMPI
SATA3RCOMPO
SATA3RCOMPI
SATA3RBIAS
SATALED#
SATA0GP/GPIO21
SATA1GP/GPIO19
P1V05S_PCH
D506
R934
37.4_1%_2
R935
49.9_1%_2
R934,R935
WITHIN 500 MILS
OF THE PCH
R890
750_1%_2
R881
10K_5%_2
LED_SATA#
2nd_WLAN_RF_OFF#
R933
10K_5%_2
BBSTRAP0
D505
D507
PCH_SPI_CLK
PCH_SPI_CS0#
PCH_SPI_CS1#
PCH_SPI_SI
PCH_SPI_SO
R991
3.3K_5%_2
R945
3.3K_5%_2
C923
0.1UF_16V_2
U520
CE#
SO
WP#
VSS
VDD
HOLD#
SCK
SI
PCH_SPI_CLK_ROM
R879
0_5%_2
ACES_91960_0084L_8P
6026B0150101
BIOS ROM 4MB (BIOS & EC ROM VENDOR MUST SAME)
MXIC_MX25L3206EM2I-12G P/N : 6019B0794701
WINBOND_W25Q32BVSSIG P/N : 6019B0704901
R947
R946
R948
R989
HSPI_CLK
HSPI_CS0#
HSPI_SI
HSPI_SO
R851
210_1%_2
R927
210_1%_2
R863
210_1%_2
PCH_TMS
PCH_TDI
PCH_TDO
R864
100_1%_2
R928
100_1%_2
R853
100_1%_2
INVENTEC
TITLE
MODEL,PROJECT,FUNCTION
PCH - 1
SIZE A3
CODE CS
DOC.NUMBER 1310xxxxx-0-0
REV X01
SHEET 26 of 57
CHANGE by XXX
DATE 21-OCT-2002

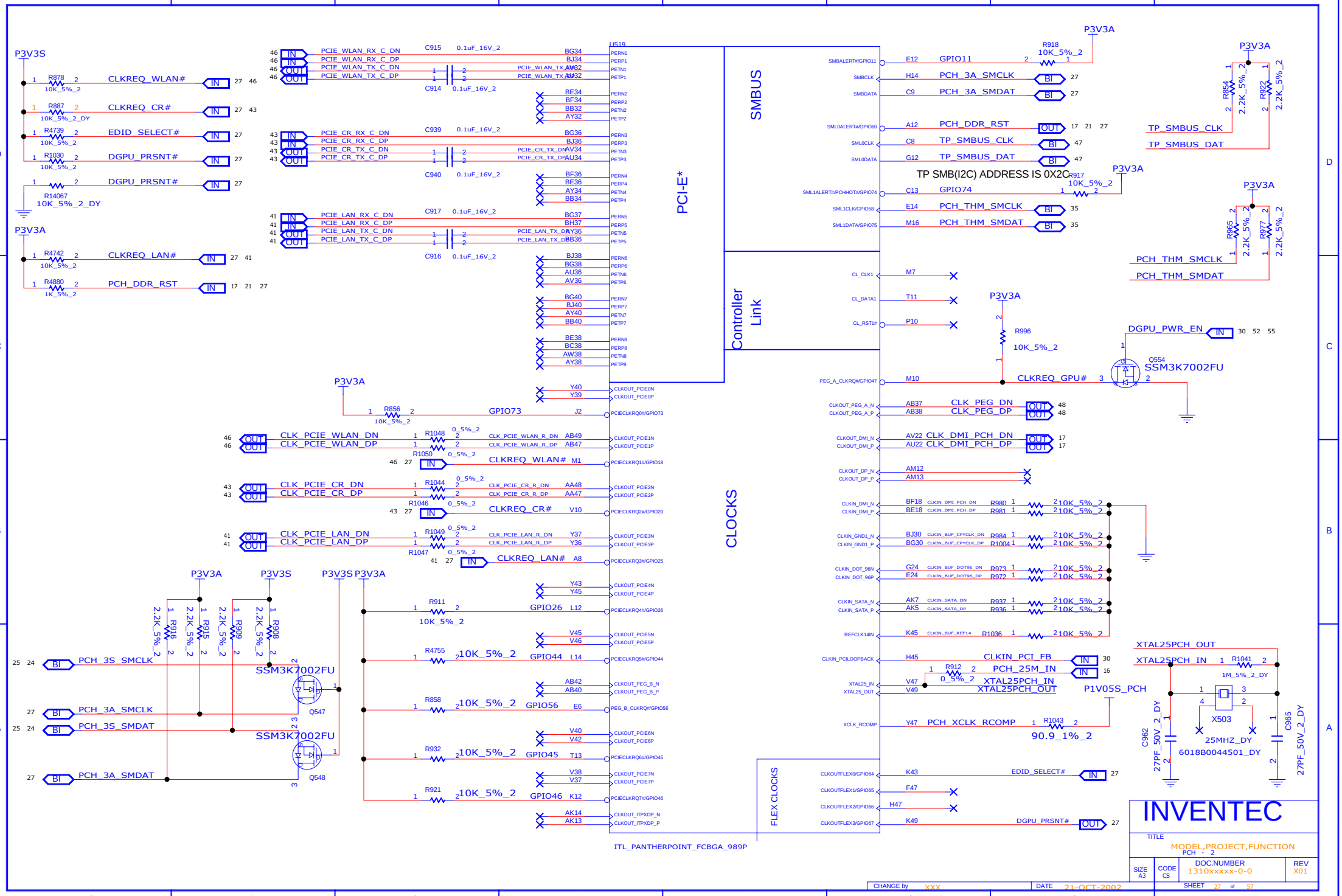
P3V3S
R878 10K_5%_2 CLKREQ_WLAN#
R887 10K_5%_2_DY CLKREQ_CR#
R4739 10K_5%_2 EDID_SELECT#
R1030 10K_5%_2 DGPU_PRSNT#
R14067 10K_5%_2_DY DGPU_PRSNT#
P3V3A
R4742 10K_5%_2 CLKREQ_LAN#
R4880 1K_5%_2 PCH_DDR_RST
PCIE_WLAN_RX_C_DN
PCIE_WLAN_RX_C_DP
PCIE_WLAN_TX_C_DN
PCIE_WLAN_TX_C_DP
C915 0.1uF_16V_2
C914 0.1uF_16V_2
PCIE_CR_RX_C_DN
PCIE_CR_RX_C_DP
PCIE_CR_TX_C_DN
PCIE_CR_TX_C_DP
C939 0.1uF_16V_2
C940 0.1uF_16V_2
PCIE_LAN_RX_C_DN
PCIE_LAN_RX_C_DP
PCIE_LAN_TX_C_DN
PCIE_LAN_TX_C_DP
C917 0.1uF_16V_2
C916 0.1uF_16V_2
U519
PCI-E*
SMBUS
Controller Link
CLOCKS
FLEX CLOCKS
R918 10K_5%_2
GPIO11
PCH_3A_SMCLK
PCH_3A_SMDAT
PCH_DDR_RST
TP_SMBUS_CLK
TP_SMBUS_DAT
TP SMB(I2C) ADDRESS IS 0X2C
R917 10K_5%_2
GPIO74
PCH_THM_SMCLK
PCH_THM_SMDAT
R996 10K_5%_2
DGPU_PWR_EN
Q554 SSM3K7002FU
CLKREQ_GPU#
CLK_PEG_DN
CLK_PEG_DP
CLK_DMI_PCH_DN
CLK_DMI_PCH_DP
R856 10K_5%_2 GPIO73
CLK_PCIE_WLAN_DN
CLK_PCIE_WLAN_DP
R1048 0_5%_2
R1050 0_5%_2 CLKREQ_WLAN#
CLK_PCIE_CR_DN
CLK_PCIE_CR_DP
R1044 0_5%_2
R1046 0_5%_2 CLKREQ_CR#
CLK_PCIE_LAN_DN
CLK_PCIE_LAN_DP
R1049 0_5%_2
R1047 0_5%_2 CLKREQ_LAN#
R911 10K_5%_2 GPIO26
R4755 10K_5%_2 GPIO44
R858 10K_5%_2 GPIO56
R932 10K_5%_2 GPIO45
R921 10K_5%_2 GPIO46
R916 2.2K_5%_2
R915 2.2K_5%_2
R909 2.2K_5%_2
R908 2.2K_5%_2
PCH_3S_SMCLK
PCH_3A_SMCLK
PCH_3S_SMDAT
PCH_3A_SMDAT
SSM3K7002FU
Q547
Q548
R912 0_5%_2
PCH_25M_IN
XTAL25PCH_IN
XTAL25PCH_OUT
CLKIN_PCI_FB
P1V05S_PCH
R1043 90.9_1%_2
PCH_XCLK_RCOMP
EDID_SELECT#
DGPU_PRSNT#
R1041 1M_5%_2_DY
X503 25MHZ_DY 6018B0044501_DY
C962 27PF_50V_2_DY
C965 27PF_50V_2_DY
R854 2.2K_5%_2
R922 2.2K_5%_2
R965 2.2K_5%_2
R977 2.2K_5%_2
ITL_PANTHERPOINT_FCBGA_989P
INVENTEC
TITLE
MODEL,PROJECT,FUNCTION
PCH - 2
SIZE A3
CODE CS
DOC.NUMBER 1310xxxxx-0-0
REV X01
CHANGE by XXX
DATE 21-OCT-2002
SHEET 27 of 57

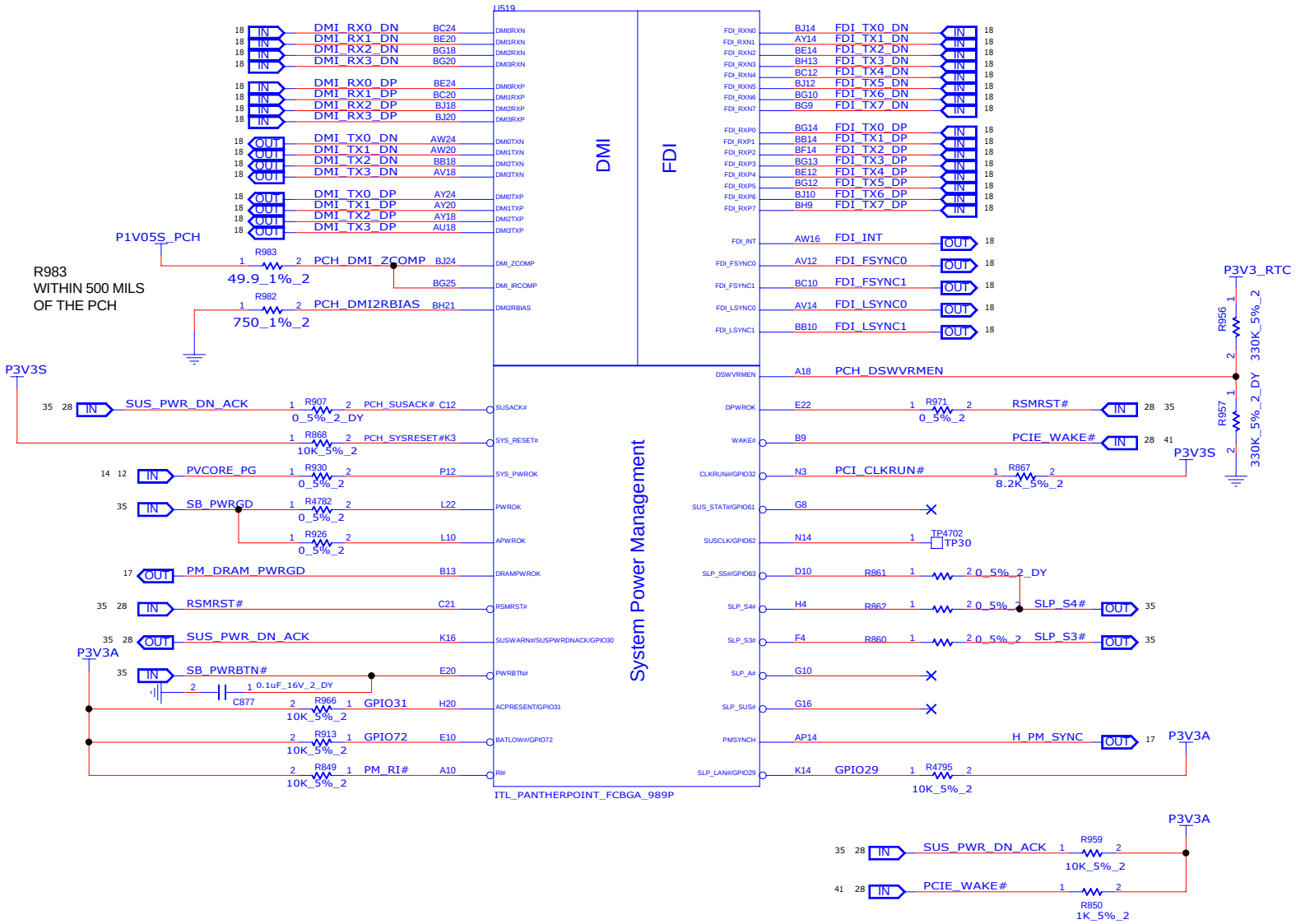

INVENTEC

TITLE
MODEL,PROJECT,FUNCTION
PCH - 3

SIZE	CODE	DOC.NUMBER	REV
A3	CS	1310xxxxx-0-0	X01

CHANGE by XXX | DATE 21-OCT-2002 | SHEET 28 of 57

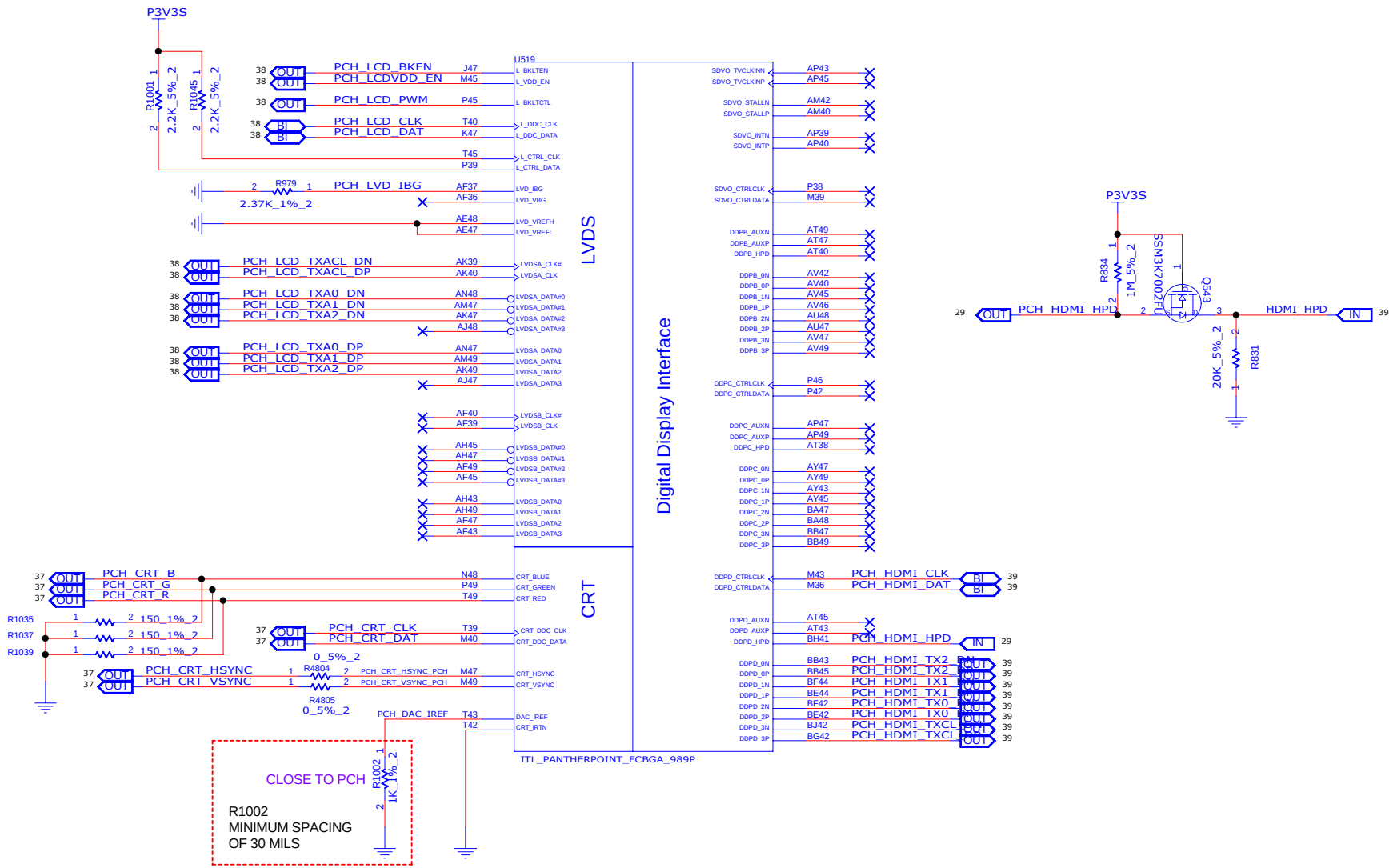

INVENTEC

TITLE
MODEL,PROJECT,FUNCTION
PCH - 4

SIZE	CODE	DOC.NUMBER	REV
A3	CS	1310xxxxx-0-0	X01

CHANGE by XXX DATE 21-OCT-2002 SHEET 29 of 57

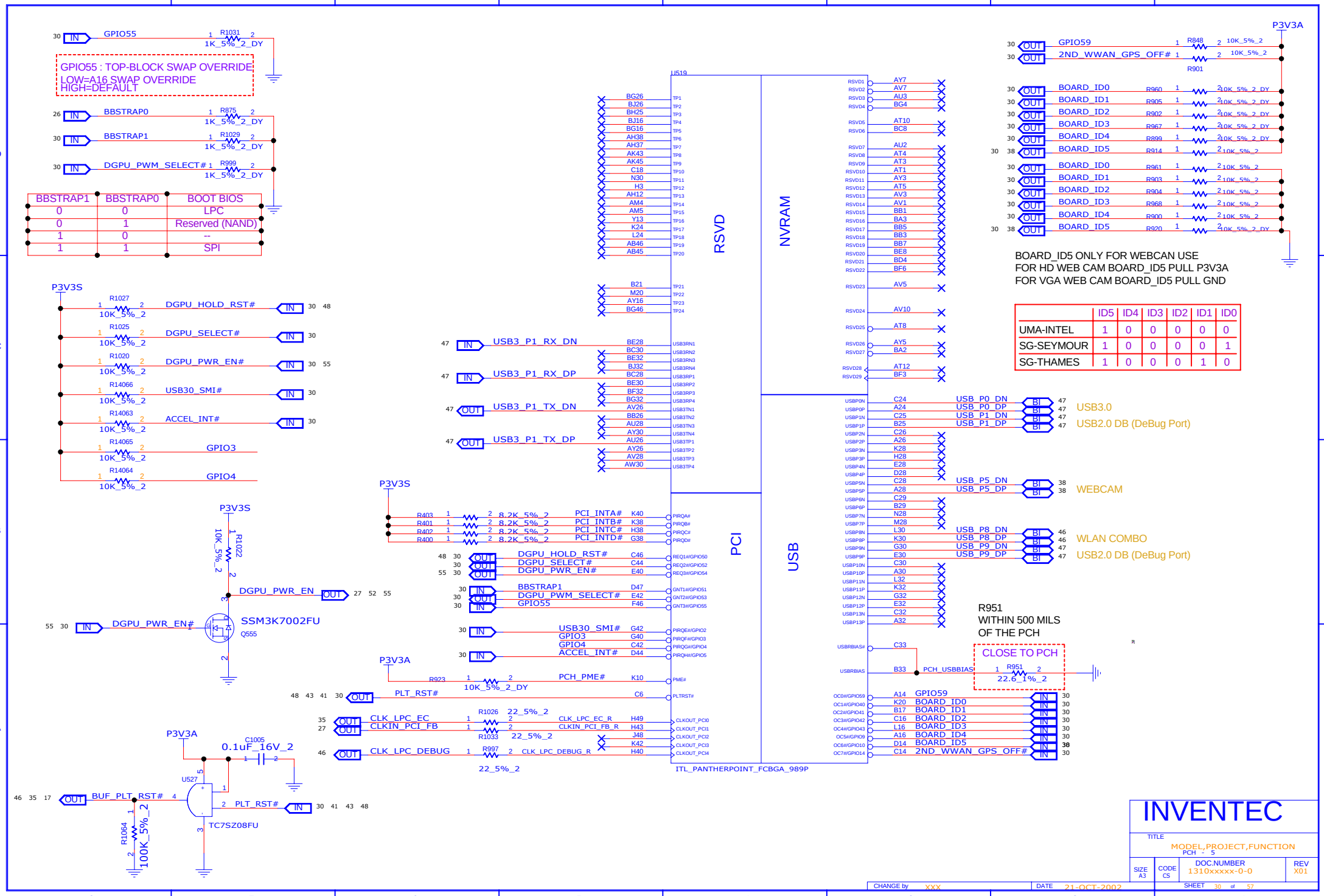
GPIO55 : TOP-BLOCK SWAP OVERRIDE
LOW=A16 SWAP OVERRIDE
HIGH=DEFAULT
BBSTRAP1 BBSTRAP0 BOOT BIOS
0 0 LPC
0 1 Reserved (NAND)
1 0 --
1 1 SPI
BOARD_ID5 ONLY FOR WEBCAN USE
FOR HD WEB CAM BOARD_ID5 PULL P3V3A
FOR VGA WEB CAM BOARD_ID5 PULL GND
ID5 ID4 ID3 ID2 ID1 ID0
UMA-INTEL 1 0 0 0 0 0
SG-SEYMOUR 1 0 0 0 0 1
SG-THAMES 1 0 0 0 1 0
USB3.0
USB2.0 DB (DeBug Port)
WEBCAM
WLAN COMBO
USB2.0 DB (DeBug Port)
R951
WITHIN 500 MILS
OF THE PCH
CLOSE TO PCH
RSVD
NVRAM
PCI
USB
ITL_PANTHERPOINT_FCBGA_989P
SSM3K7002FU
Q555
TC7SZ08FU
INVENTEC
MODEL,PROJECT,FUNCTION
PCH - 5
DOC.NUMBER 1310xxxxx-0-0
REV X01
CHANGE by XXX
DATE 21-OCT-2002

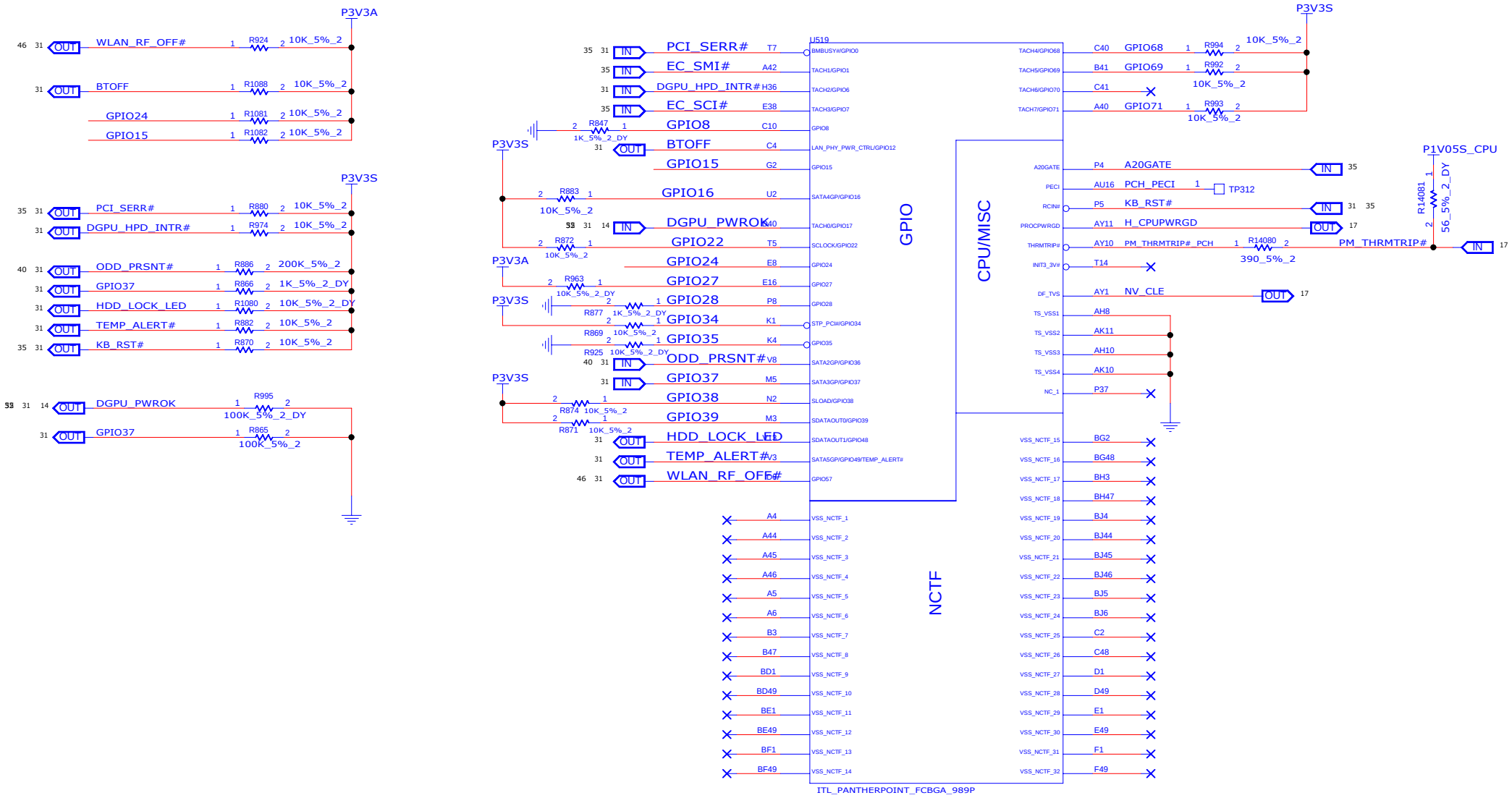

INVENTEC

TITLE MODEL,PROJECT,FUNCTION
PCH - 6

SIZE	CODE	DOC.NUMBER	REV
A3	CS	1310xxxxx-0-0	X01

CHANGE by XXX DATE 21-OCT-2002 SHEET 31 of 57

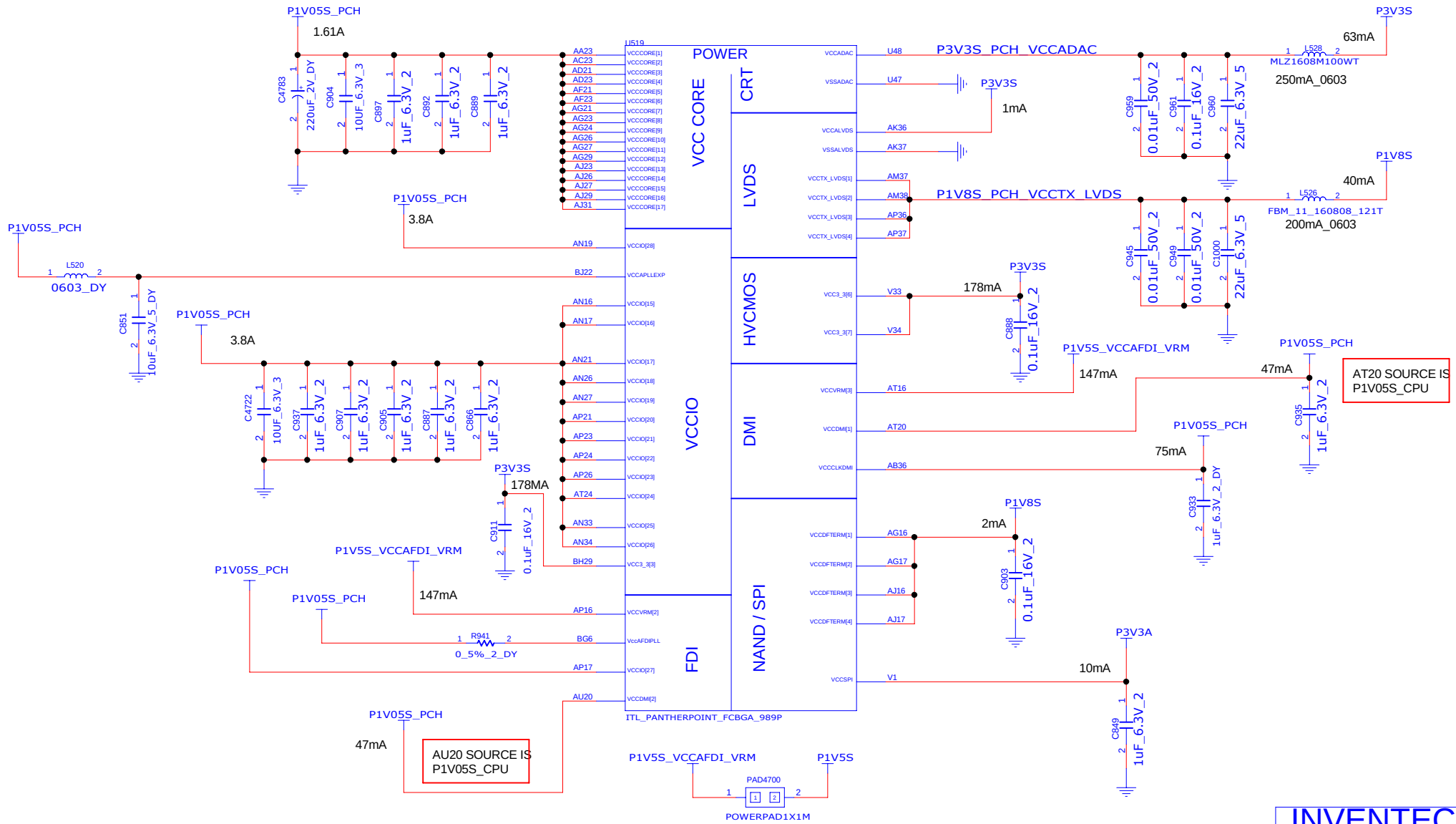

INVENTEC

TITLE
MODEL,PROJECT,FUNCTION
PCH - 7

SIZE	CODE	DOC.NUMBER	REV
A3	CS	1310xxxxx-0-0	X01

CHANGE by XXX | DATE 21-OCT-2002 | SHEET 32 of 57

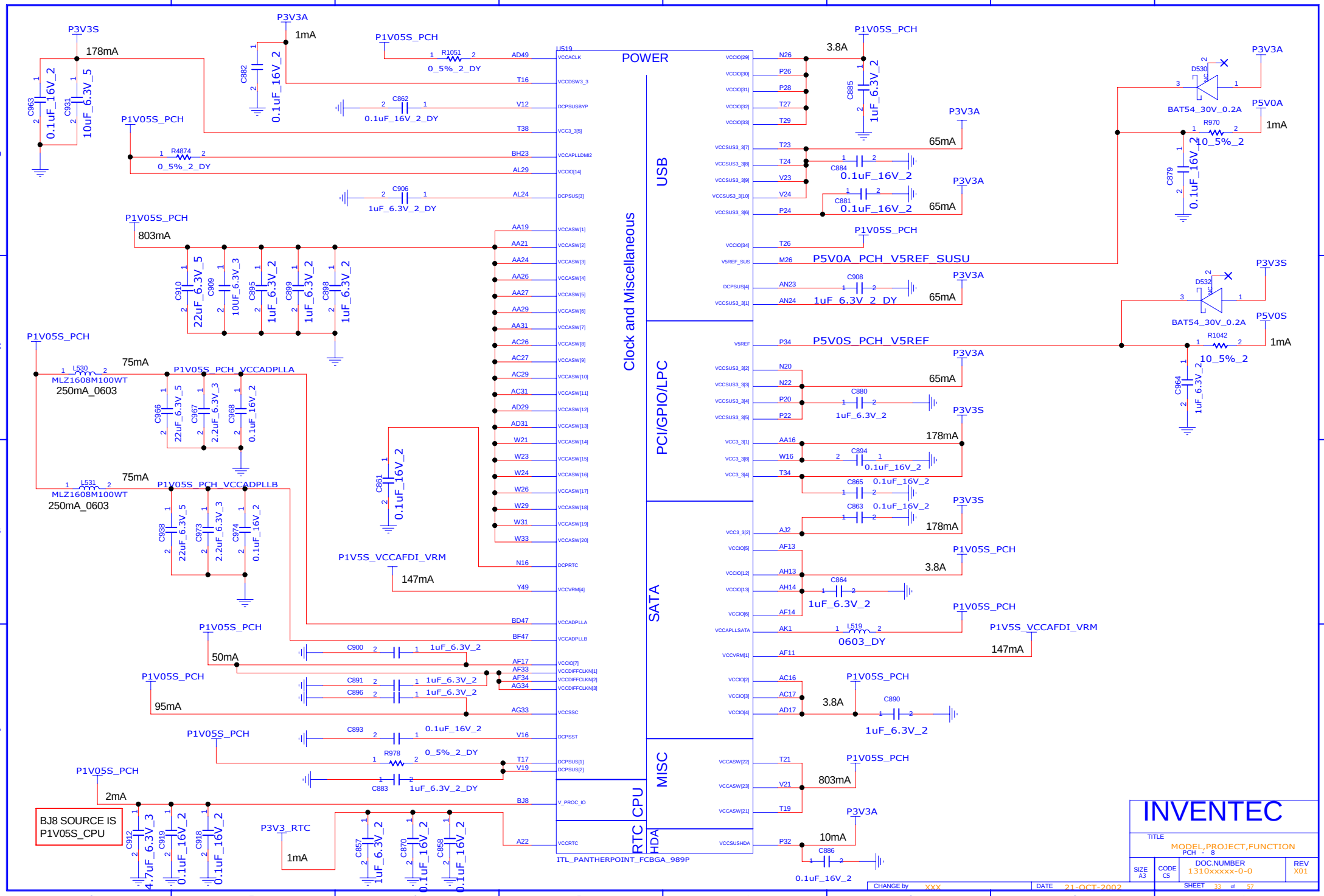
POWER
USB
Clock and Miscellaneous
PCI/GPIO/LPC
SATA
MISC
CPU
RTC
HDA
ITL_PANTHERPOINT_FCBGA_989P
P3V3S
178mA
P3V3A
1mA
P1V05S_PCH
3.8A
P5V0A_PCH_V5REF_SUSU
P5V0A_PCH_V5REF_SUSU
P5V0A
P5V0S_PCH_V5REF
P5V0S
P1V05S_PCH_VCCADPLLA
P1V05S_PCH_VCCADPLLB
P1V5S_VCCAFDI_VRM
147mA
803mA
65mA
178mA
50mA
95mA
2mA
10mA
BJ8 SOURCE IS
P1V05S_CPU
P3V3_RTC
BAT54_30V_0.2A
INVENTEC
MODEL,PROJECT,FUNCTION
PCH - 8
DOC.NUMBER
1310xxxxx-0-0
REV
X01
SIZE
A3
CODE
CS
CHANGE by
XXX
DATE
21-OCT-2002
SHEET
33
of
57

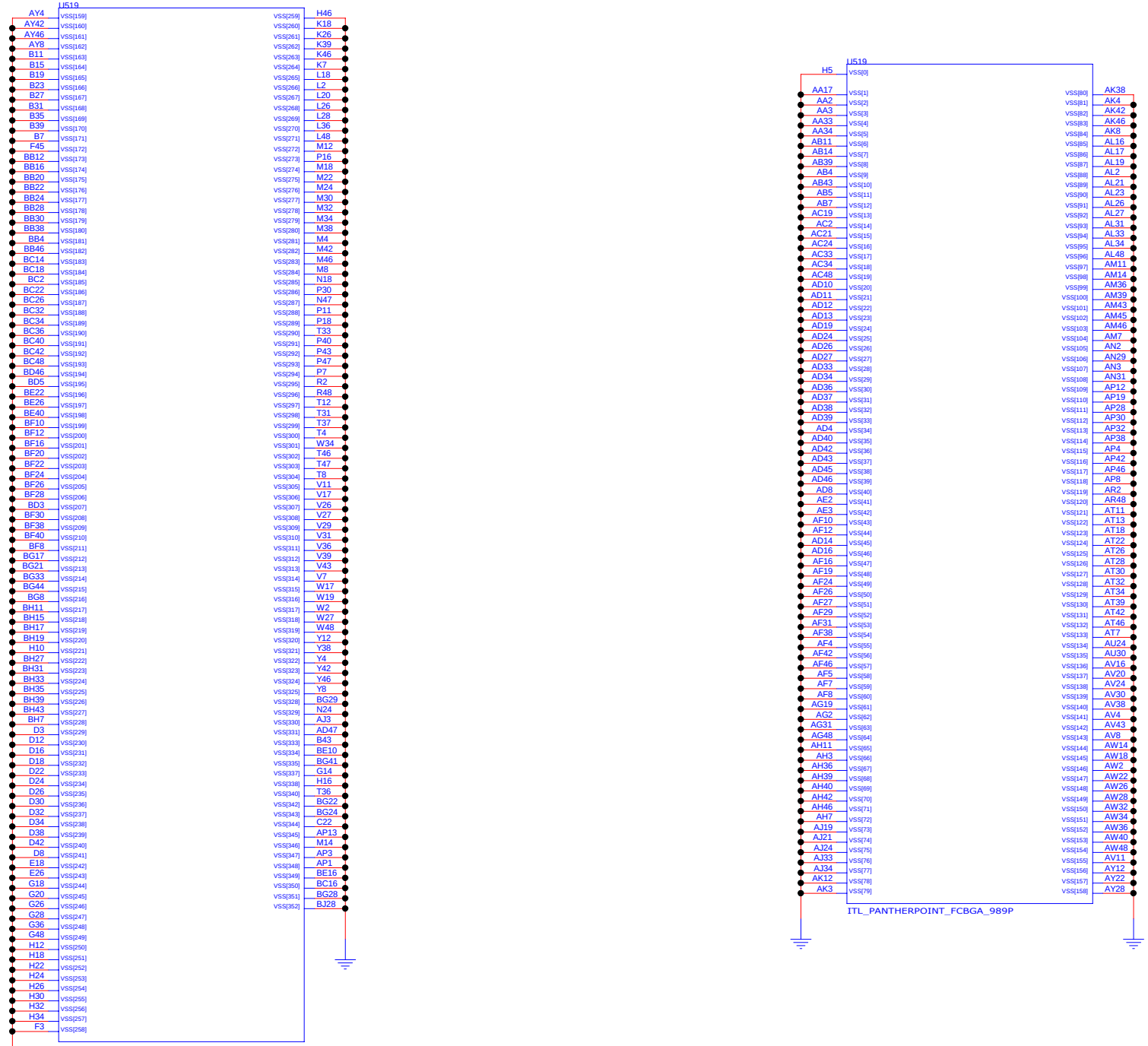

INVENTEC

TITLE
MODEL,PROJECT,FUNCTION
PCH - 9

SIZE	CODE	DOC.NUMBER	REV
A3	CS	1310xxxxx-0-0	X01

CHANGE by XXX DATE 21-OCT-2002

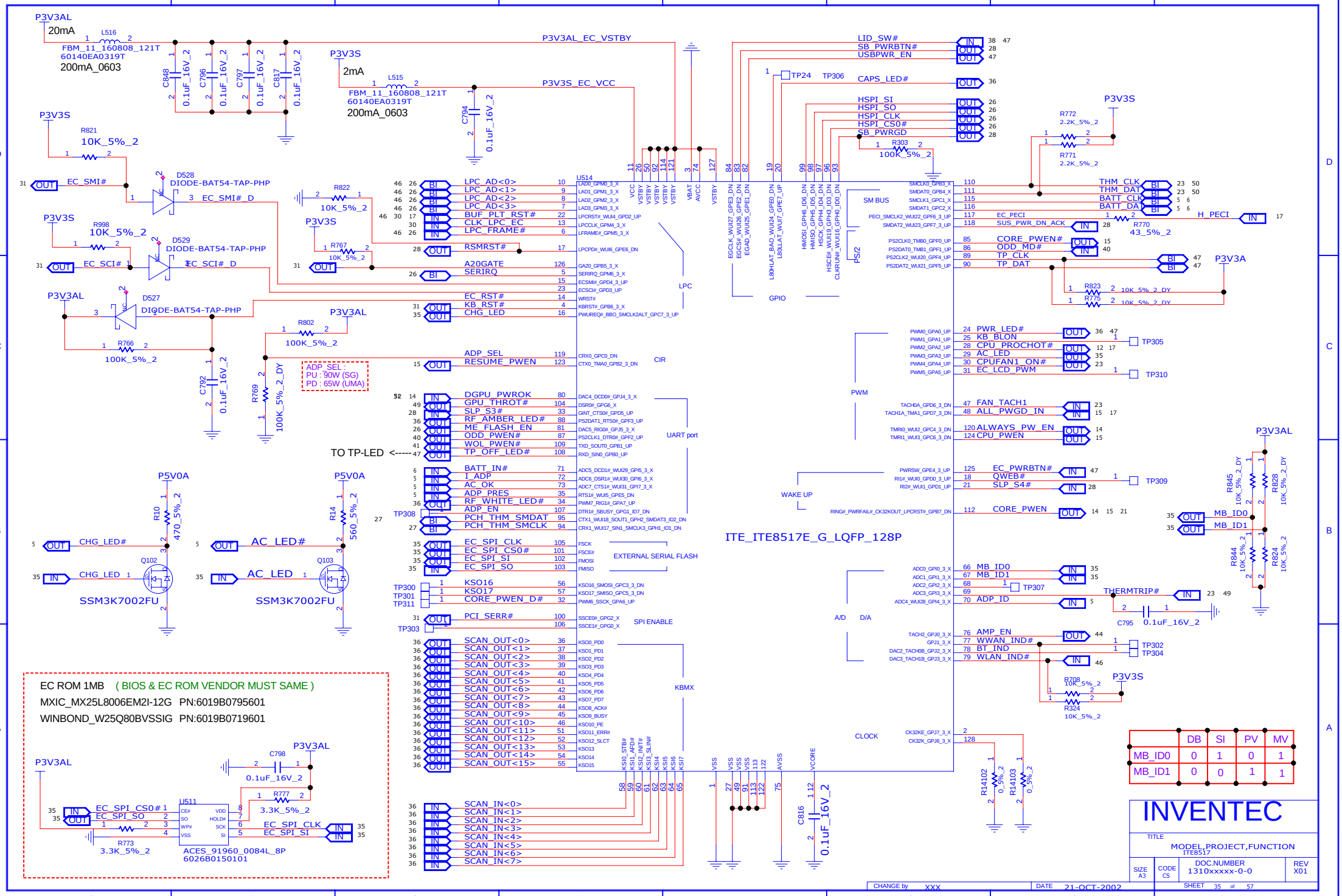

	DB	SI	PV	MV
MB_ID0	0	1	0	1
MB_ID1	0	0	1	1

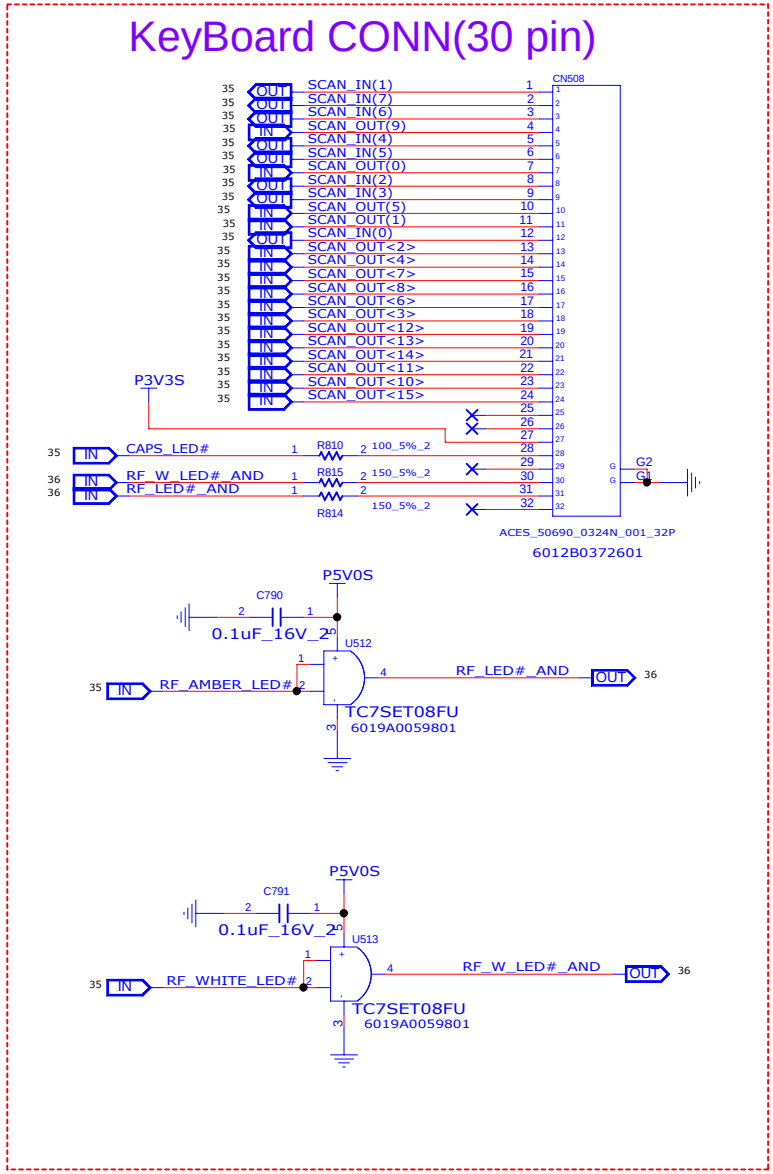

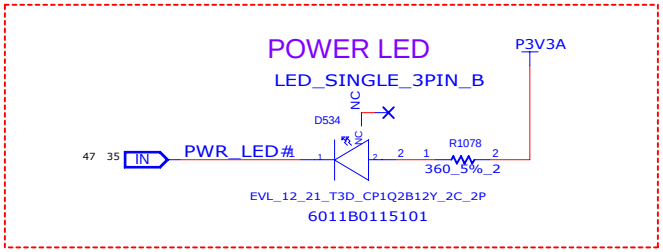

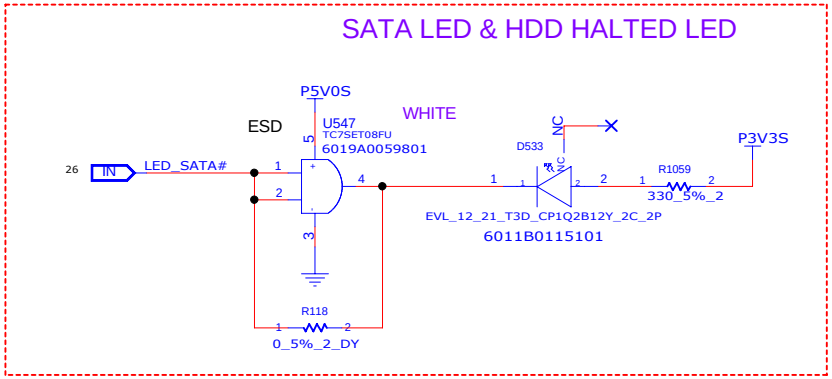

INVENTEC

TITLE
MODEL,PROJECT,FUNCTION
KB CONN & LED

SIZE	CODE	DOC.NUMBER	REV
A3	CS	1310xxxxx-0-0	X01

CHANGE by XXX | DATE 21-OCT-2002 | SHEET 36 of 57

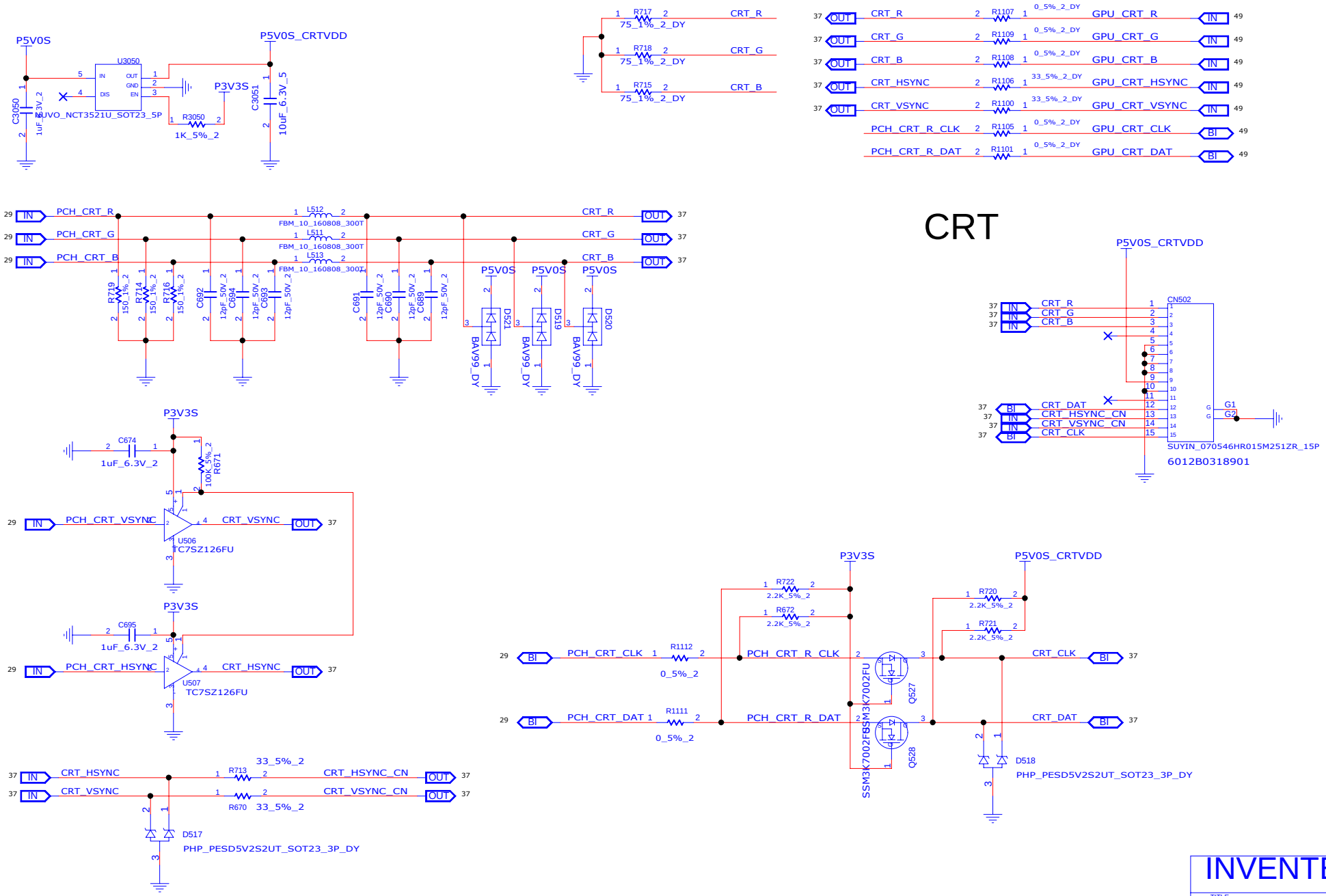
CRT
P5V0S
P5V0S_CRTVDD
U3050
NUVO_NCT3521U_SOT23_5P
C3050
1uF_6.3V_2
R3050
1K_5%_2
P3V3S
C3051
10uF_6.3V_5
R717
75_1%_2_DY
R718
75_1%_2_DY
R715
75_1%_2_DY
CRT_R
CRT_G
CRT_B
R1107
R1109
R1108
R1106
R1100
R1105
R1101
0_5%_2_DY
33_5%_2_DY
GPU_CRT_R
GPU_CRT_G
GPU_CRT_B
GPU_CRT_HSYNC
GPU_CRT_VSYNC
GPU_CRT_CLK
GPU_CRT_DAT
PCH_CRT_R_CLK
PCH_CRT_R_DAT
PCH_CRT_R
PCH_CRT_G
PCH_CRT_B
L512
L511
L513
FBM_10_160808_300T
R719
R714
R716
150_1%_2
C692
C694
C693
C691
C690
C689
12pF_50V_2
D521
D519
D520
BAV99_DY
CN502
SUYIN_070546HR015M251ZR_15P
6012B0318901
CRT_DAT
CRT_HSYNC_CN
CRT_VSYNC_CN
CRT_CLK
G1
G2
C674
C695
1uF_6.3V_2
R671
100K_5%_2
PCH_CRT_VSYNC
CRT_VSYNC
U506
TC7SZ126FU
PCH_CRT_HSYNC
CRT_HSYNC
U507
R713
R670
D517
PHP_PESD5V2S2UT_SOT23_3P_DY
R722
R672
R720
R721
2.2K_5%_2
R1112
R1111
PCH_CRT_R_CLK
PCH_CRT_R_DAT
SSM3K7002FU
Q527
Q528
D518
INVENTEC
TITLE
MODEL,PROJECT,FUNCTION
CRT CONN
SIZE A3
CODE CS
DOC.NUMBER 1310xxxxx-0-0
REV X01
CHANGE by XXX
DATE 21-OCT-2002
SHEET 37 of 57

LCM

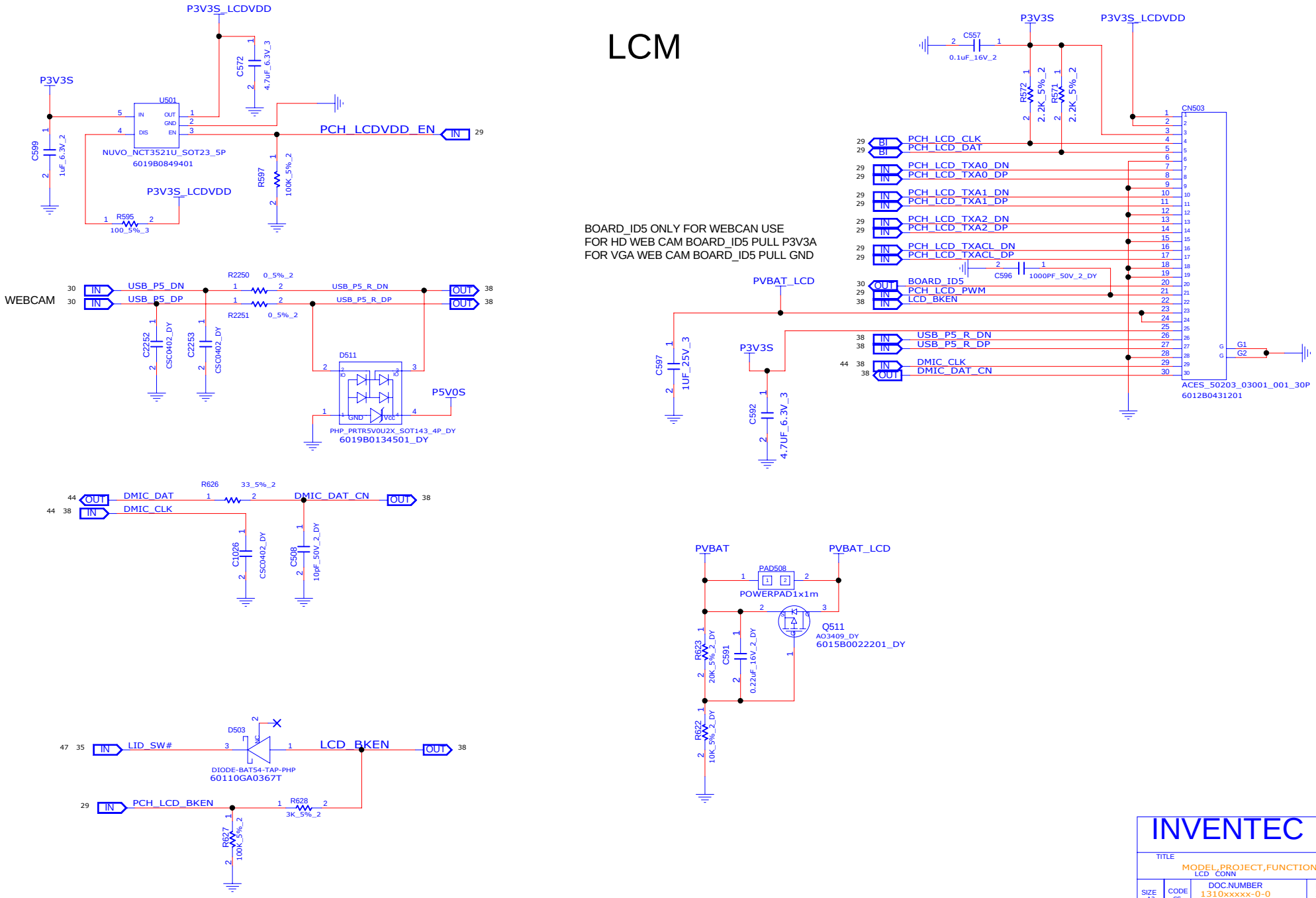

BOARD_ID5 ONLY FOR WEBCAN USE
FOR HD WEB CAM BOARD_ID5 PULL P3V3A
FOR VGA WEB CAM BOARD_ID5 PULL GND

INVENTEC

TITLE
MODEL,PROJECT,FUNCTION
LCD CONN

SIZE	CODE	DOC.NUMBER	REV
A3	CS	1310xxxxx-0-0	X01

CHANGE by XXX | DATE 21-OCT-2002 | SHEET 38 of 57

HDMI

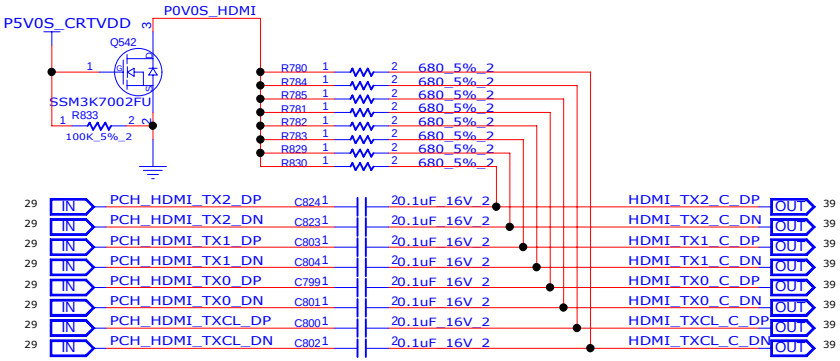

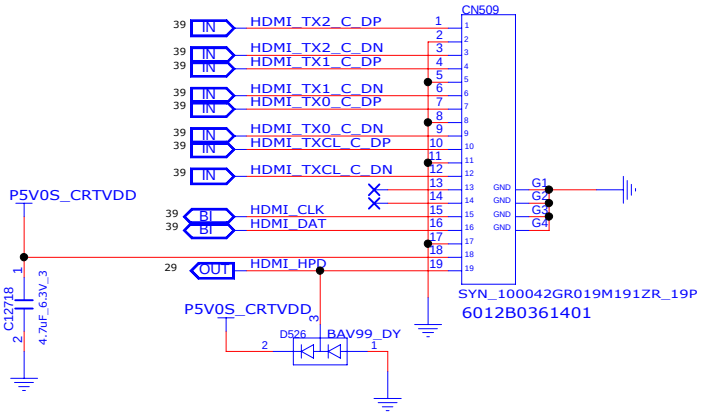

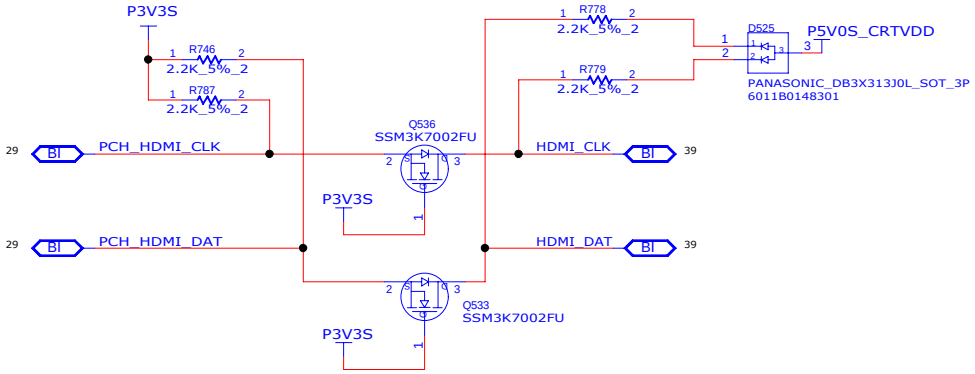

INVENTEC			
TITLE: MODEL,PROJECT,FUNCTION HDMI CONN			
SIZE A3	CODE CS	DOC.NUMBER 1310xxxxx-0-0	REV X01
CHANGE by XXX	DATE 21-OCT-2002	SHEET 39 of 57	

SATA HDD CABLE CONN on MB

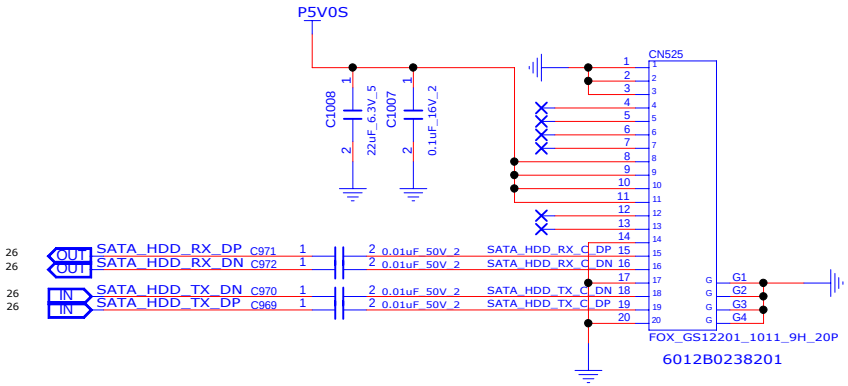

SATA ODD CABLE CONN on MB

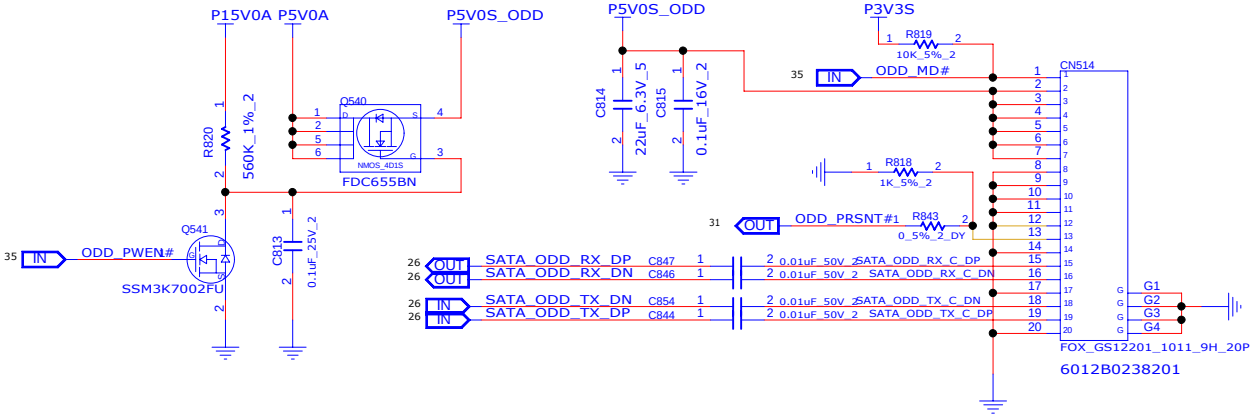

INVENTEC

TITLE
MODEL,PROJECT,FUNCTION
SATA HDD & SATA ODD

SIZE	CODE	DOC.NUMBER	REV
A3	CS	1310xxxxx-0-0	X01

CHANGE by XXX DATE 21-OCT-2002 SHEET 40 of 57

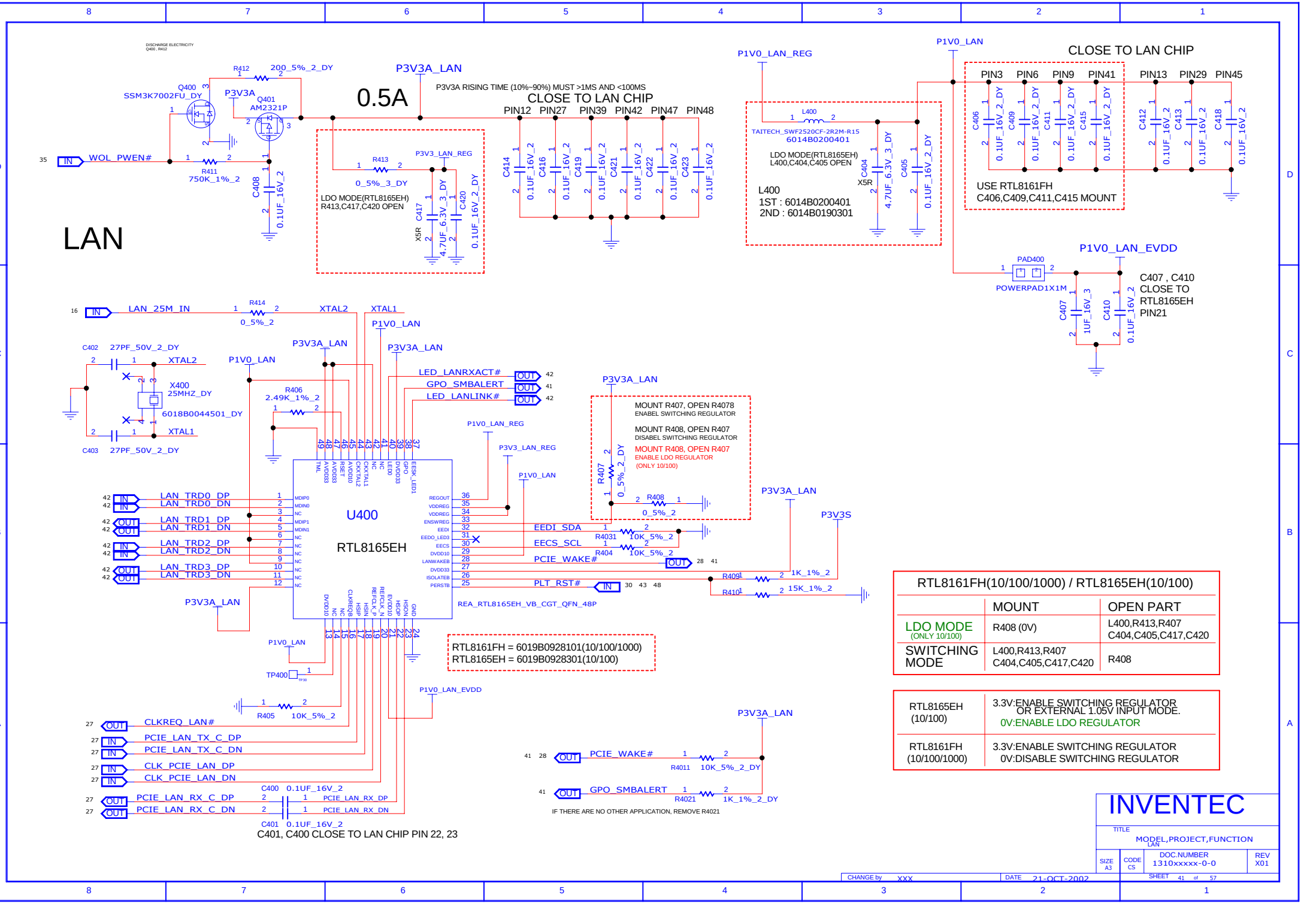
LAN
DISCHARGE ELECTRICITY Q400 , R412
Q400 SSM3K7002FU_DY
Q401 AM2321P
R412 200_5%_2_DY
P3V3A
P3V3A_LAN
0.5A
P3V3A RISING TIME (10%~90%) MUST >1MS AND <100MS
CLOSE TO LAN CHIP
PIN12 PIN27 PIN39 PIN42 PIN47 PIN48
WOL_PWEN#
R411 750K_1%_2
C408 0.1UF_16V_2
R413 0_5%_3_DY
P3V3_LAN_REG
LDO MODE(RTL8165EH)
R413,C417,C420 OPEN
C417 4.7UF_6.3V_3_DY
C420 0.1UF_16V_2_DY
C414 C416 C419 C421 C422 C423 0.1UF_16V_2
P1V0_LAN_REG
L400
TAITECH_SWF2520CF-2R2M-R15
6014B0200401
LDO MODE(RTL8165EH)
L400,C404,C405 OPEN
C404 4.7UF_6.3V_3_DY
C405 0.1UF_16V_2_DY
L400
1ST : 6014B0200401
2ND : 6014B0190301
P1V0_LAN
CLOSE TO LAN CHIP
PIN3 PIN6 PIN9 PIN41 PIN13 PIN29 PIN45
C406 C409 C411 C415 0.1UF_16V_2_DY
C412 C413 C418 0.1UF_16V_2
USE RTL8161FH
C406,C409,C411,C415 MOUNT
P1V0_LAN_EVDD
PAD400
POWERPAD1X1M
C407 1UF_16V_3
C410 0.1UF_16V_2
C407 , C410
CLOSE TO
RTL8165EH
PIN21
LAN_25M_IN
R414 0_5%_2
XTAL2
XTAL1
C402 27PF_50V_2_DY
C403 27PF_50V_2_DY
X400 25MHZ_DY
6018B0044501_DY
R406 2.49K_1%_2
LED_LANRXACT#
GPO_SMBALERT
LED_LANLINK#
MOUNT R407, OPEN R4078
ENABEL SWITCHING REGULATOR
MOUNT R408, OPEN R407
DISABEL SWITCHING REGULATOR
MOUNT R408, OPEN R407
ENABLE LDO REGULATOR
(ONLY 10/100)
R407 0_5%_2_DY
R408 0_5%_2
P3V3S
U400
RTL8165EH
REA_RTL8165EH_VB_CGT_QFN_48P
LAN_TRD0_DP
LAN_TRD0_DN
LAN_TRD1_DP
LAN_TRD1_DN
LAN_TRD2_DP
LAN_TRD2_DN
LAN_TRD3_DP
LAN_TRD3_DN
EEDI_SDA
EECS_SCL
PCIE_WAKE#
PLT_RST#
R4031 10K_5%_2
R404 10K_5%_2
R409 1K_1%_2
R410 15K_1%_2
TP400
R405 10K_5%_2
CLKREQ_LAN#
PCIE_LAN_TX_C_DP
PCIE_LAN_TX_C_DN
CLK_PCIE_LAN_DP
CLK_PCIE_LAN_DN
PCIE_LAN_RX_C_DP
PCIE_LAN_RX_C_DN
C400 0.1UF_16V_2
C401 0.1UF_16V_2
C401, C400 CLOSE TO LAN CHIP PIN 22, 23
RTL8161FH = 6019B0928101(10/100/1000)
RTL8165EH = 6019B0928301(10/100)
R4011 10K_5%_2_DY
R4021 1K_1%_2_DY
IF THERE ARE NO OTHER APPLICATION, REMOVE R4021
RTL8161FH(10/100/1000) / RTL8165EH(10/100)
MOUNT
OPEN PART
LDO MODE (ONLY 10/100)
R408 (0V)
L400,R413,R407 C404,C405,C417,C420
SWITCHING MODE
L400,R413,R407 C404,C405,C417,C420
R408
RTL8165EH (10/100)
3.3V:ENABLE SWITCHING REGULATOR OR EXTERNAL 1.05V INPUT MODE.
0V:ENABLE LDO REGULATOR
RTL8161FH (10/100/1000)
3.3V:ENABLE SWITCHING REGULATOR
0V:DISABLE SWITCHING REGULATOR
INVENTEC
TITLE
MODEL,PROJECT,FUNCTION
LAN
SIZE A3
CODE CS
DOC.NUMBER 1310xxxxx-0-0
REV X01
SHEET 41 of 57
CHANGE by XXX
DATE 21-OCT-2002

TRANSFORMER

U470 FOR GIGALAN

U502 FOR 10/100 LAN

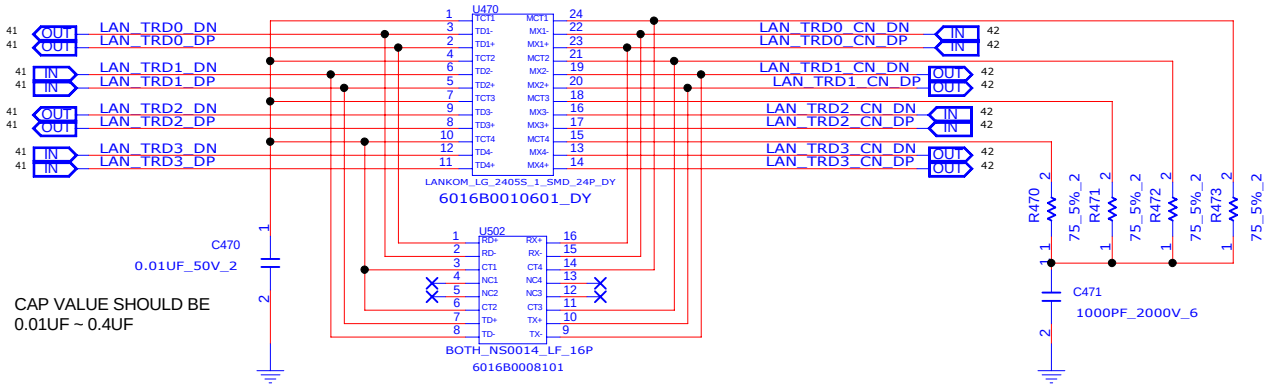

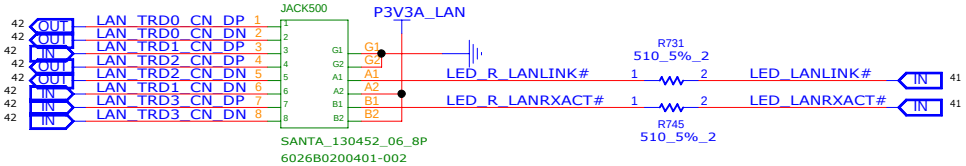

INVENTEC

TITLE

MODEL,PROJECT,FUNCTION

RJ45 & TRANSFORMER

SIZE	CODE	DOC.NUMBER	REV
A3	CS	1310xxxxx-0-0	X01

CHANGE by XXX | DATE 21-OCT-2002 | SHEET 42 of 57

CARE READER

★RTS5239GR = 6019B0928001

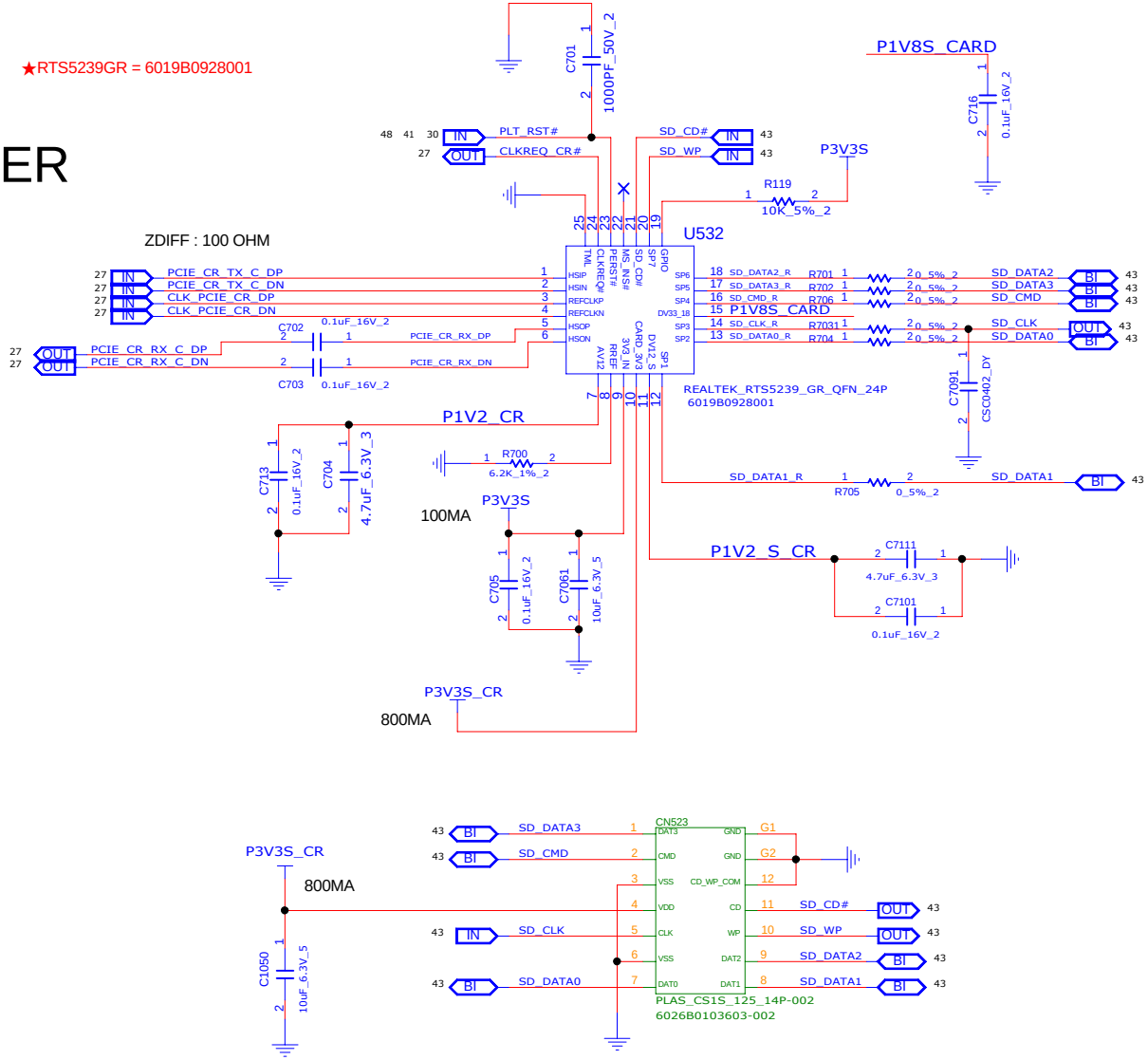

■ On chip 800ma MOSFET for direct power control of all types memory cards

INVENTEC			
TITLE: MODEL,PROJECT,FUNCTION CARD READER			
SIZE A3	CODE CS	DOC.NUMBER 1310xxxxx-0-0	REV X01
CHANGE by XXX	DATE 21-OCT-2002	SHEET 43 of 57	

AUDIO

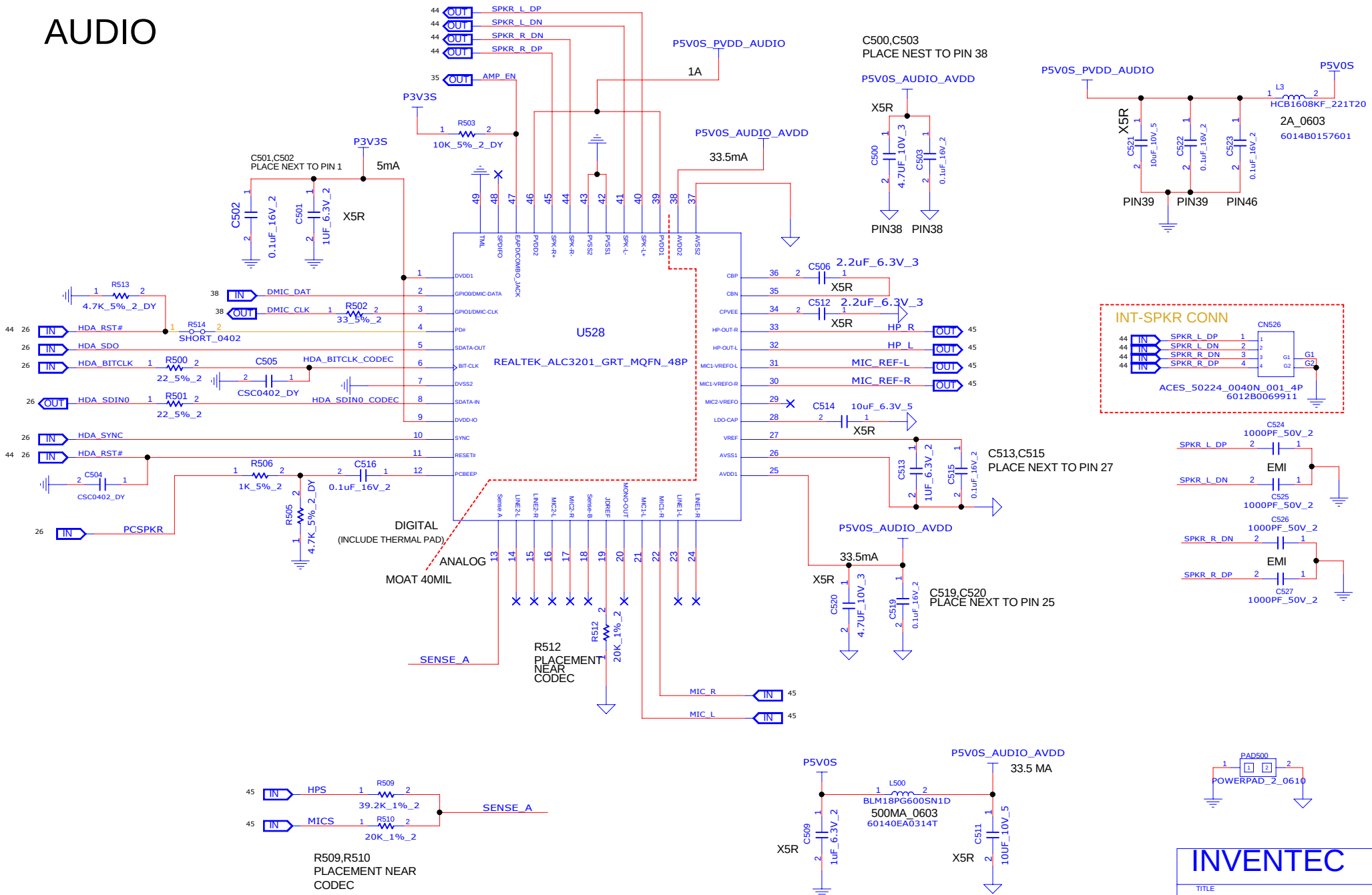

INVENTEC

TITLE
MODEL,PROJECT,FUNCTION
AUDIO CODEC

SIZE	CODE	DOC.NUMBER	REV
A3	CS	1310xxxxx-0-0	X01

CHANGE by XXX DATE 21-OCT-2002 SHEET 44 of 57

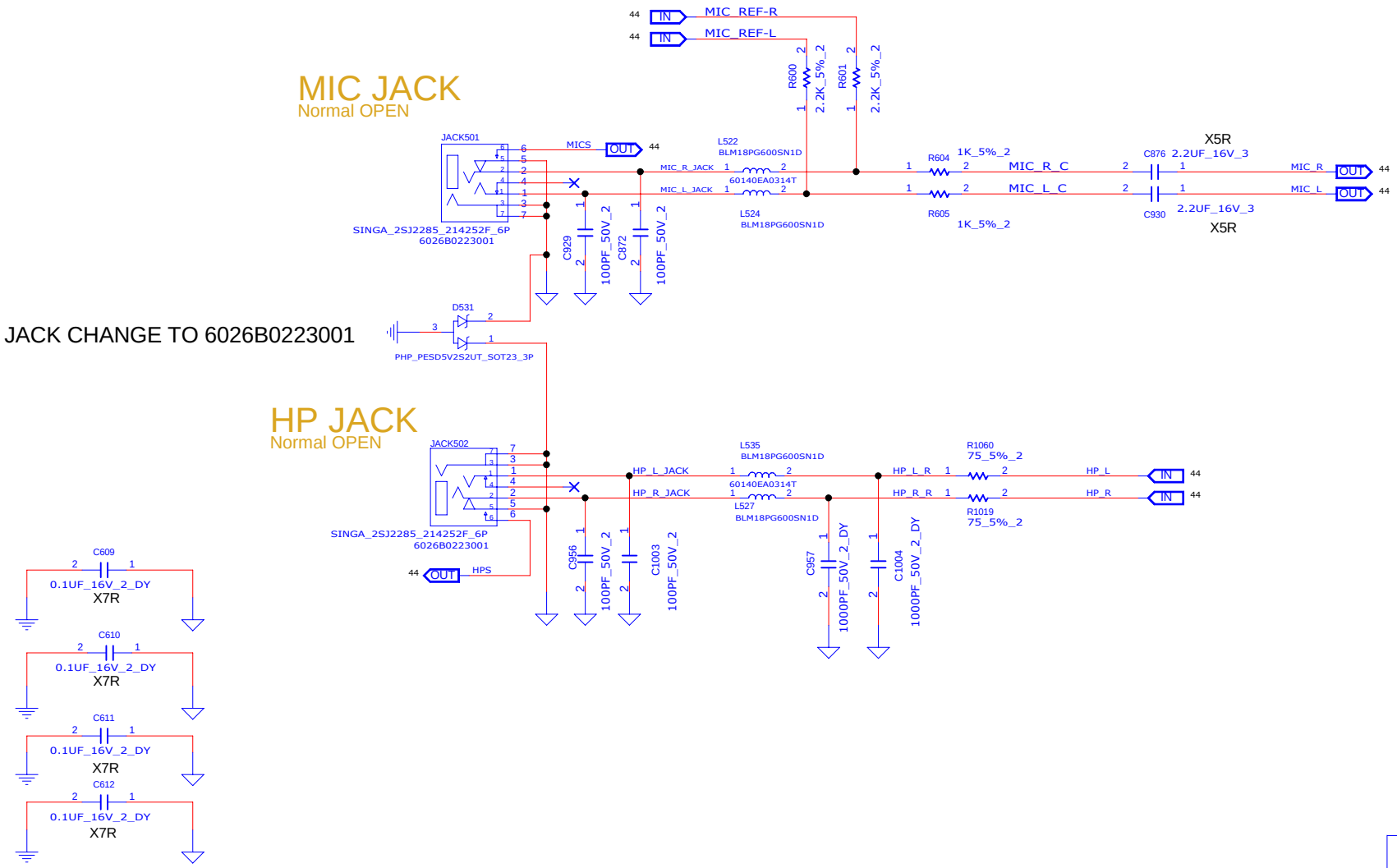

INVENTEC

TITLE
MODEL,PROJECT,FUNCTION
HP JACK & MIC JACK

SIZE	CODE	DOC.NUMBER	REV
A3	CS	1310xxxxx-0-0	X01

CHANGE by XXX | DATE 21-OCT-2002 | SHEET 45 of 57

WLAN CONN (MINICARD)

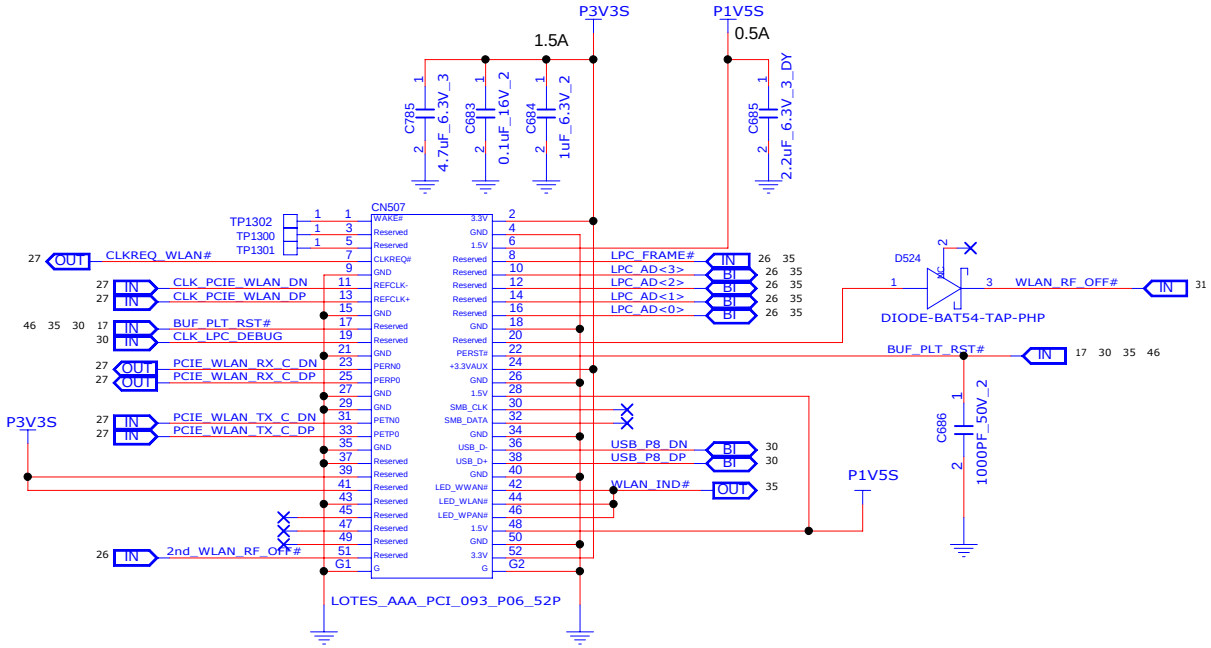

SI build change to 6026B0221502

	MARILYN	RIPPLE3
	ATHEROS	FOXCONN
	AR5B125	RALINK RT5390
VENDOR ID :	0X168C	0X1814
DEVICE ID :	0X0032	0X539A
(SSID) SUBSYSTEM ID :	0X1838	0X1839
SUBSYSTEM VENDOR ID :	0X103C	0X103C
HP P/N :	670036-001	670285-001

INVENTEC

TITLE MODEL,PROJECT,FUNCTION
WLAN & BT

SIZE	CODE	DOC.NUMBER	REV
A3	CS	1310xxxxx-0-0	X01

CHANGE by XXX DATE 21-OCT-2002 SHEET 46 of 57

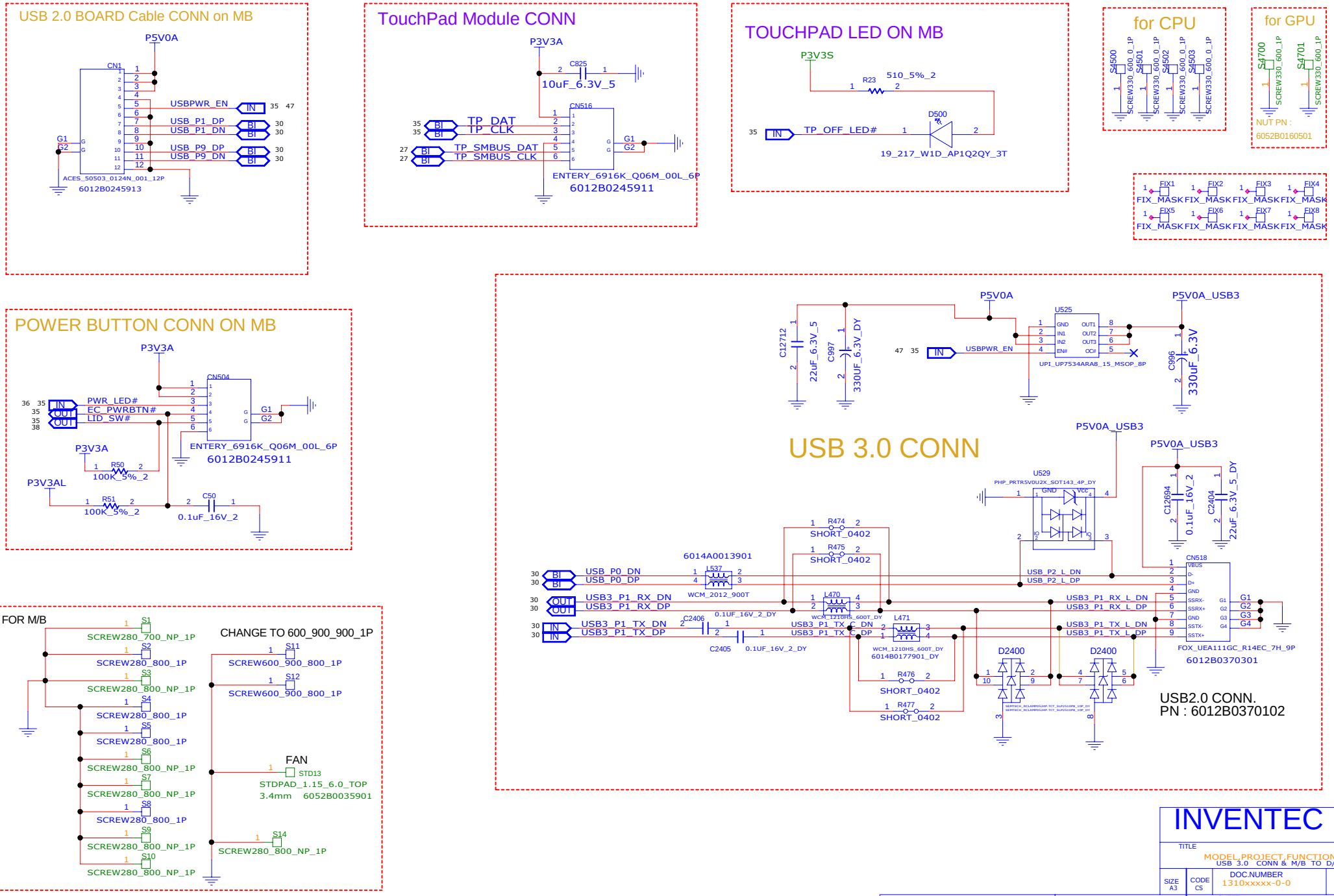
USB 2.0 BOARD Cable CONN on MB
P5V0A
CN1
USBPWR_EN
USB_P1_DP
USB_P1_DN
USB_P9_DP
USB_P9_DN
ACES_50503_0124N_001_12P
6012B0245913
TouchPad Module CONN
P3V3A
C825
10uF_6.3V_5
CN516
TP_DAT
TP_CLK
TP_SMBUS_DAT
TP_SMBUS_CLK
ENTERY_6916K_Q06M_00L_6P
6012B0245911
TOUCHPAD LED ON MB
P3V3S
R23
510_5%_2
D500
TP_OFF_LED#
19_217_W1D_AP1Q2QY_3T
for CPU
for GPU
NUT PN :
6052B0160501
FIX_MASK
POWER BUTTON CONN ON MB
P3V3A
CN504
PWR_LED#
EC_PWRBTN#
LID_SW#
ENTERY_6916K_Q06M_00L_6P
6012B0245911
R50
100K_5%_2
P3V3AL
R51
100K_5%_2
C50
0.1uF_16V_2
P5V0A
P5V0A_USB3
U525
UP1_UP7534ARA8_15_MSOP_8P
C12712
22uF_6.3V_5
C997
330UF_6.3V_DY
C996
330uF_6.3V
USBPWR_EN
USB 3.0 CONN
U529
PHP_PRTR5V0U2X_SOT143_4P_DY
C12694
0.1uF_16V_2
C2404
22uF_6.3V_5_DY
6014A0013901
L537
WCM_2012_900T
R474
SHORT_0402
R475
SHORT_0402
USB_P0_DN
USB_P0_DP
USB3_P1_RX_DN
USB3_P1_RX_DP
USB3_P1_TX_DN
USB3_P1_TX_DP
C2406
0.1UF_16V_2_DY
C2405
0.1UF_16V_2_DY
L470
WCM_1210HS_600T_DY
L471
WCM_1210HS_600T_DY
6014B0177901_DY
R476
SHORT_0402
R477
SHORT_0402
USB_P2_L_DN
USB_P2_L_DP
USB3_P1_RX_L_DN
USB3_P1_RX_L_DP
USB3_P1_TX_L_DN
USB3_P1_TX_L_DP
D2400
CN518
FOX_UEA111GC_R14EC_7H_9P
6012B0370301
USB2.0 CONN.
PN : 6012B0370102
FOR M/B
SCREW280_700_NP_1P
SCREW280_800_1P
SCREW280_800_NP_1P
CHANGE TO 600_900_900_1P
SCREW600_900_800_1P
FAN
STD13
STDPAD_1.15_6.0_TOP
3.4mm 6052B0035901
INVENTEC
TITLE
MODEL,PROJECT,FUNCTION
USB 3.0 CONN & M/B TO D/B CONN
SIZE A3
CODE CS
DOC.NUMBER 1310xxxxx-0-0
REV X01
SHEET 47 of 57
CHANGE by XXX
DATE 21-OCT-2002

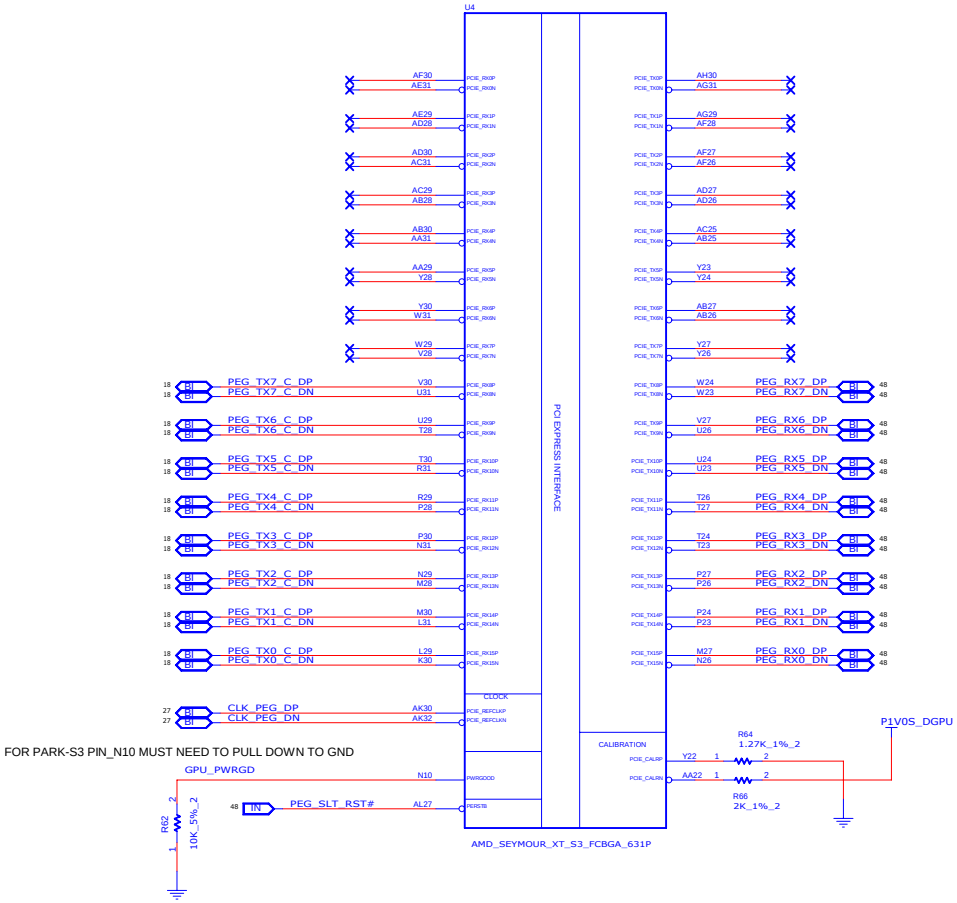

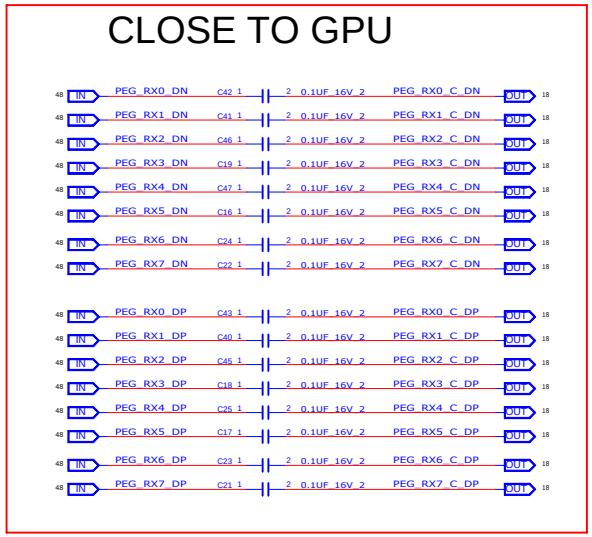

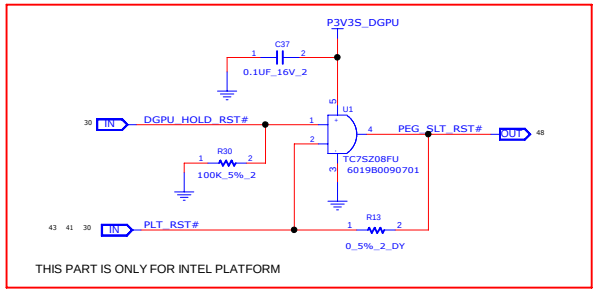

INVENTEC

TITLE MODEL,PROJECT,FUNCTION
SEYMOUR XT-S3

SIZE	CODE	DOC.NUMBER	REV
C	CS	1310xxxxx-0-0	X01

SHEET 48 of 57

CHANGE by XXX DATE 21-OCT-2002

MEM_ID3	MEM_ID2	MEM_ID1	MEM_ID0	2Gb * 4 = 1GB		
0	0	0	0	SAMSUNG C-DIE K4W2G1646C-HC11	128M * 16 *4	PN : 6019B0818601
0	0	0	1	HYNIX D-DIE H5TQ2G63DFR-11C	128M * 16 *4	PN : 6019B0938301
0	0	1	0	MICRON MT41J128M16HA-107G:D	128M * 16 *4	P/N : APPLY
0	0	1	1			

STRAPS	PIN	DESCRIPTION OF DEFAULT SETTING
TX_PWRS_ENB	GPIO0	PCIE FULL TX OUTPUT SWING
TX_DEEMPH_EN	GPIO1	PCIE TRANSMITTER DE-EMPHASIS ENABLED
BIF_GEN2_EN_A	GPIO2	PCIE GEN2 ENABLED
BIF_DEBUG_ACCESS	GPIO4	DEBUG SIGNALS MUXED OUT
	GPIO7_BLON	CONTROL BACKLIGHT ON/OFF
BIF_VGA_DIS	GPIO9	VGA ENABLED
ROMIDCFG(2:0)	GPIO[11:13]	MEMORY APERTURE SIZE SELECT

IF GPIO_22_EN=0 , THEN GPIO[11:13] DEFINES THE PRIMARY MEMORYAPERTURE SIZE

GPIO_13	GPIO_12	GPIO_11	MEMORY APERTURE SIZE
0	0	1	512/256 MB (DEFAULT)
1	1	0	RESERVED

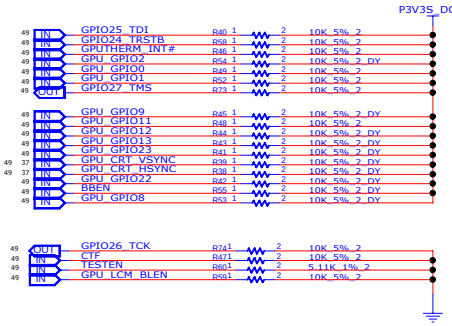

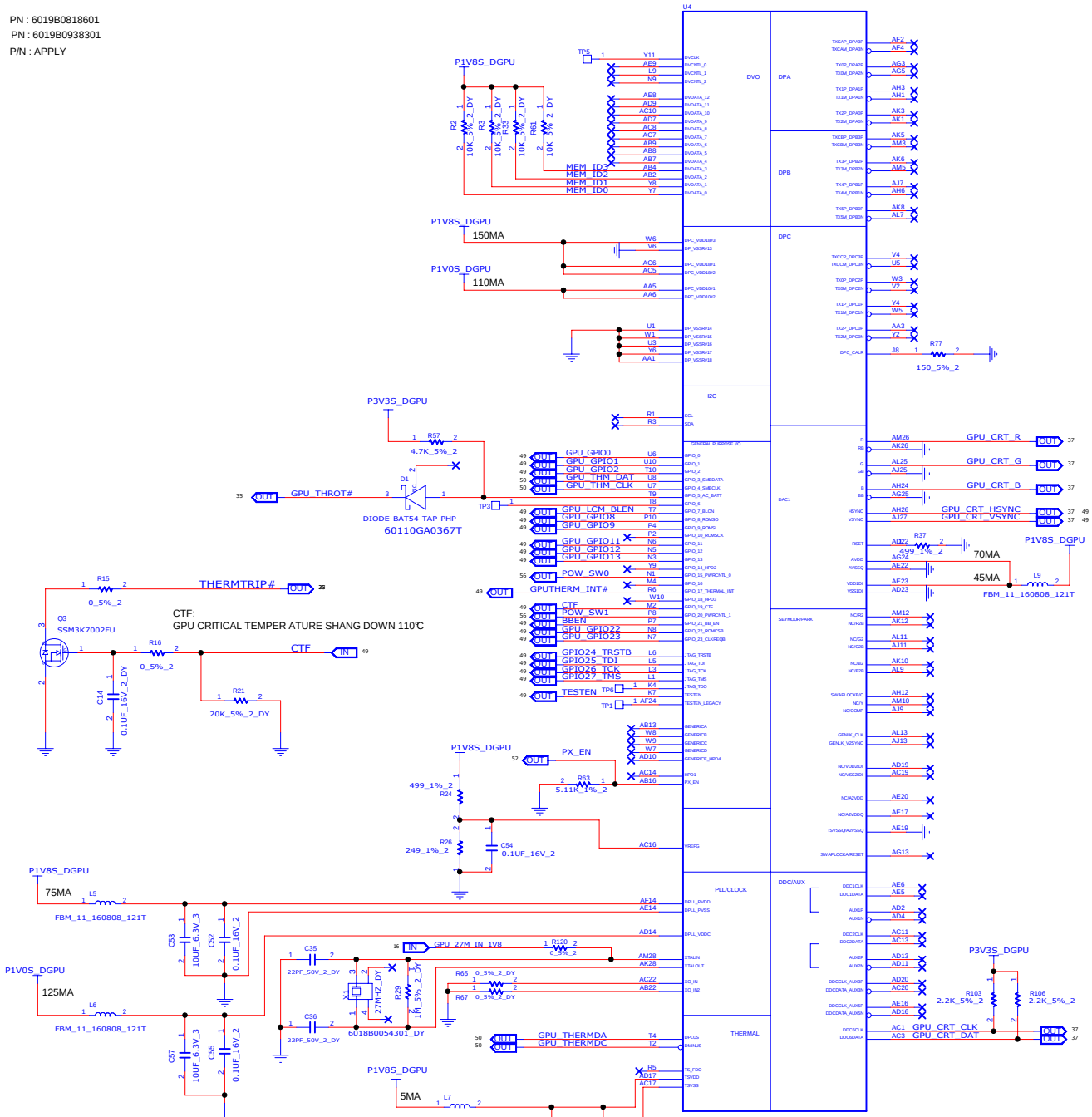

POW_SW1	POW_SW0	+VDDC_GPU
0	0	1.1V
0	1	1V
1	0	0.95V
1	1	0.9V

INVENTEC

TITLE: MODEL,PROJECT,FUNCTION
SEYMOUR XT-S3

SIZE	CODE	DOC.NUMBER	REV
C	CS	1310xxxxx-0-0	X01

SHEET 49 of 57

CHANGE by XXX DATE 21-OCT-2002

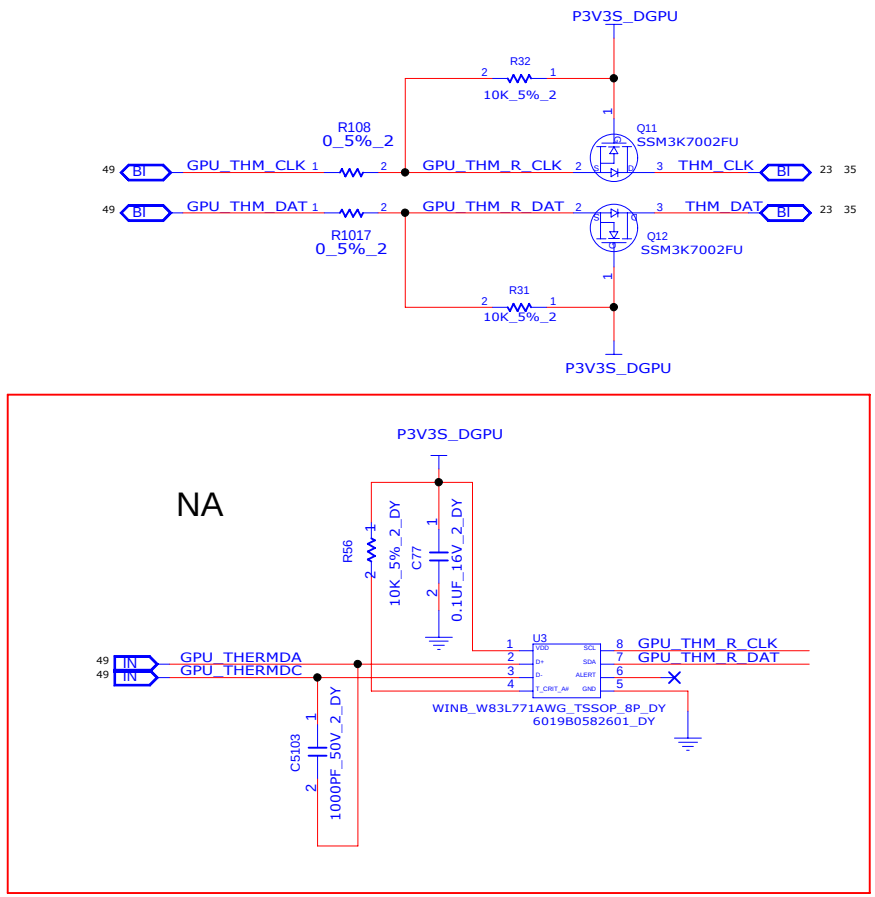

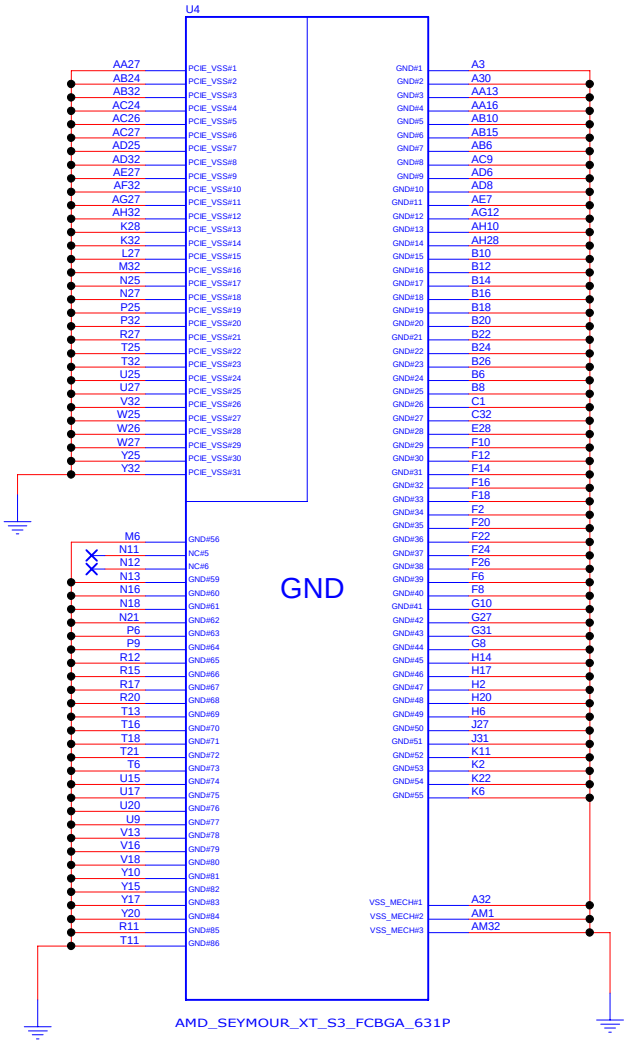

INVENTEC

TITLE
MODEL,PROJECT,FUNCTION
SEYMOUR XT-S3

SIZE	CODE	DOC.NUMBER	REV
A3	CS	1310xxxxx-0-0	X01

CHANGE by XXX DATE 21-OCT-2002 SHEET 50 of 57

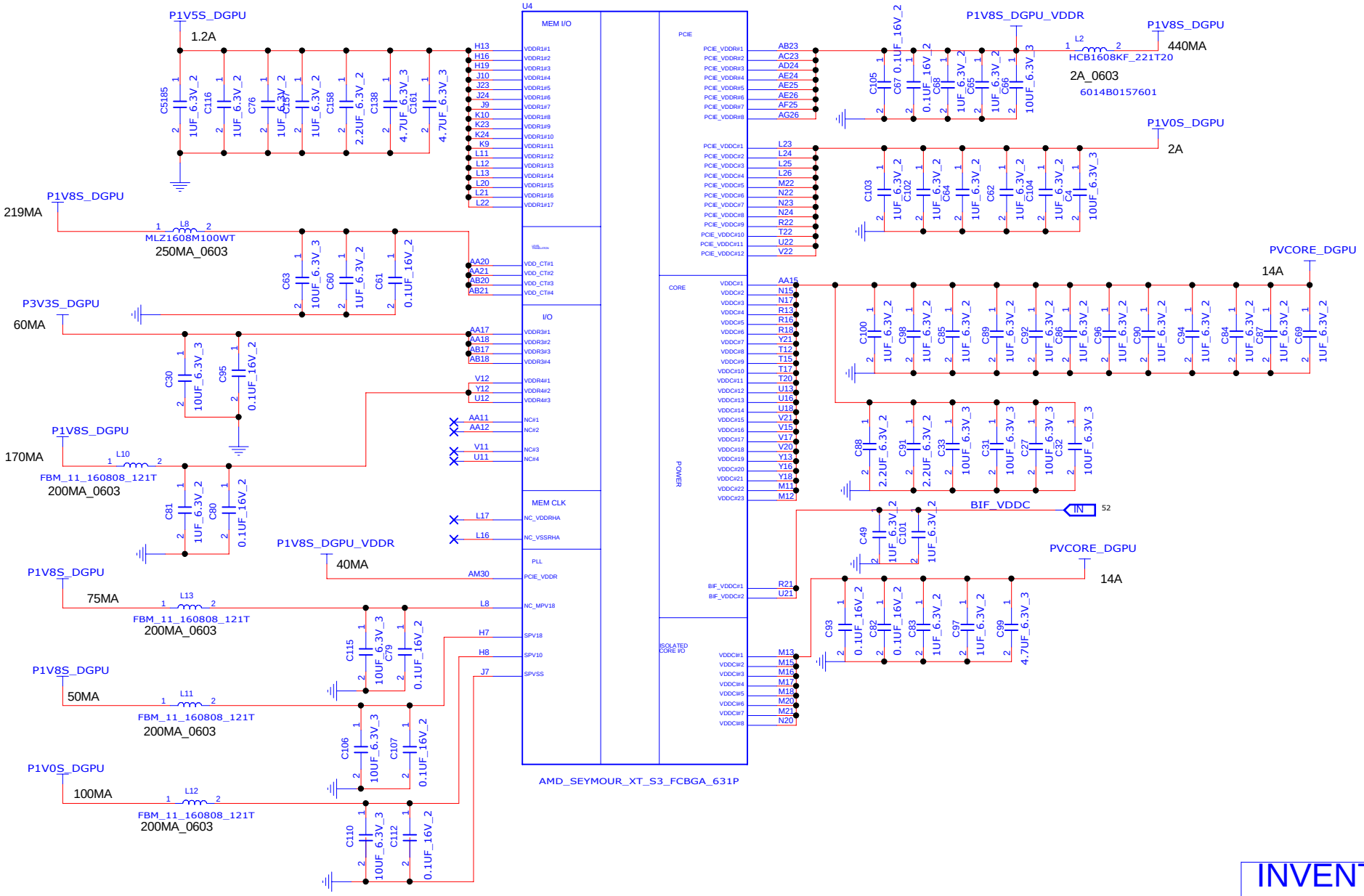

INVENTEC

TITLE
MODEL,PROJECT,FUNCTION
SEYMOUR XT-S3

SIZE	CODE	DOC.NUMBER	REV
A3	CS	1310xxxxx-0-0	X01

CHANGE by XXX DATE 21-OCT-2002 SHEET 51 of 57

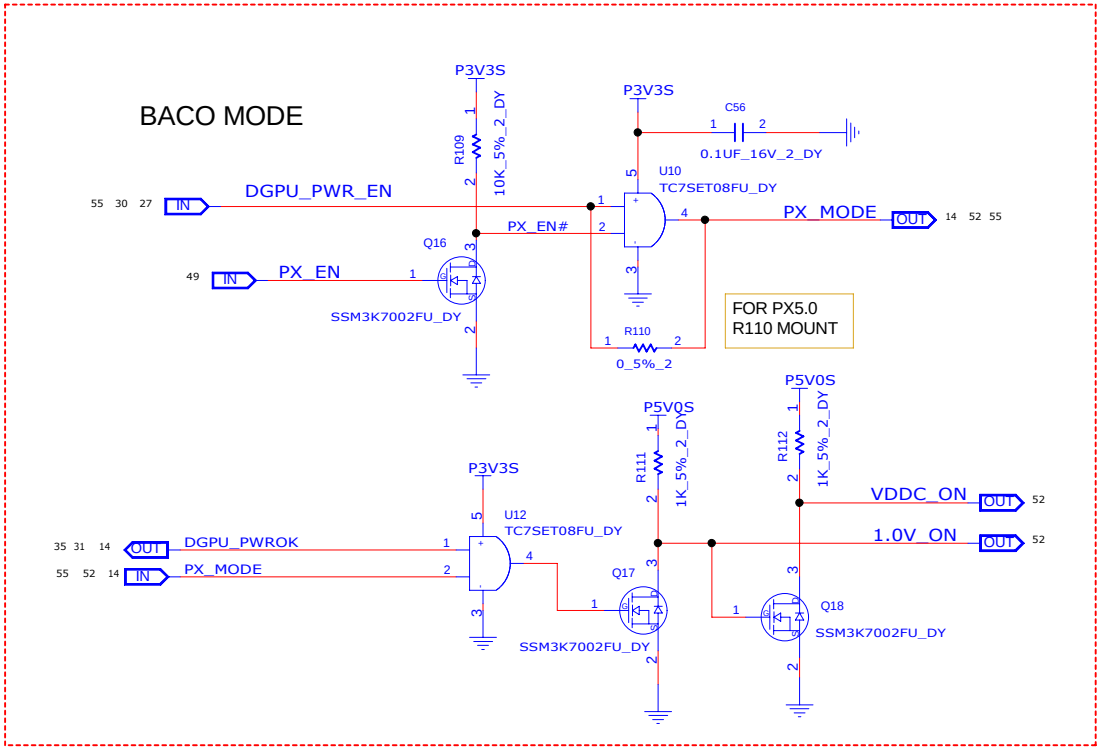

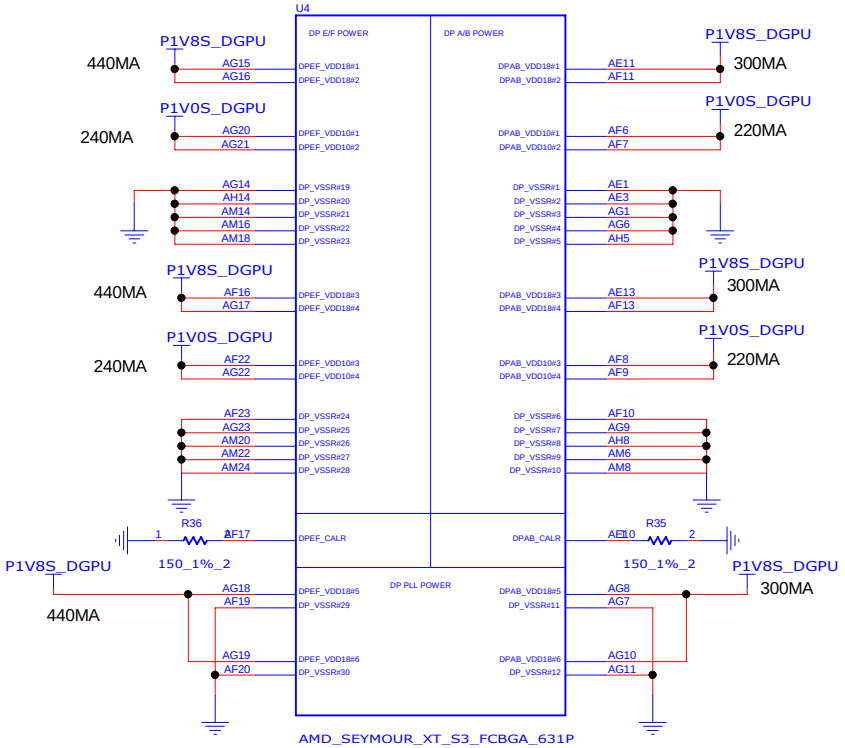

DEFULT IS PX5.0

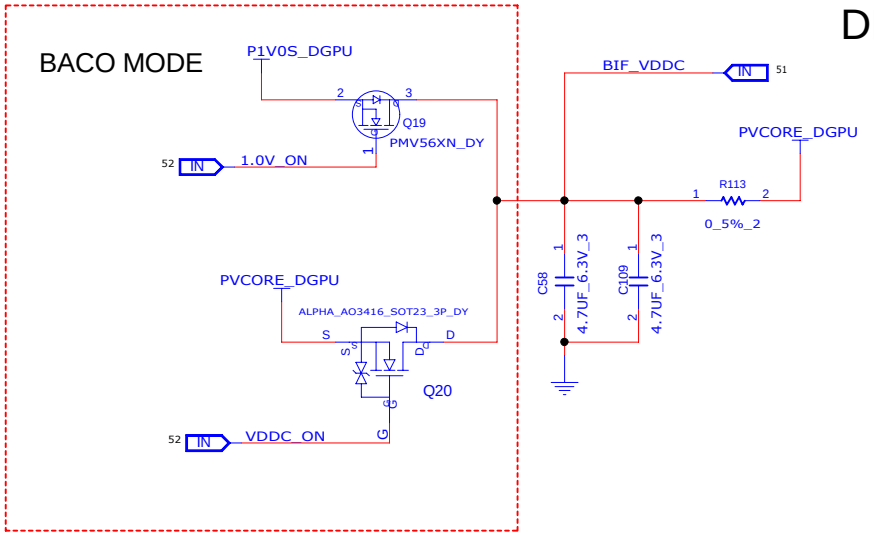

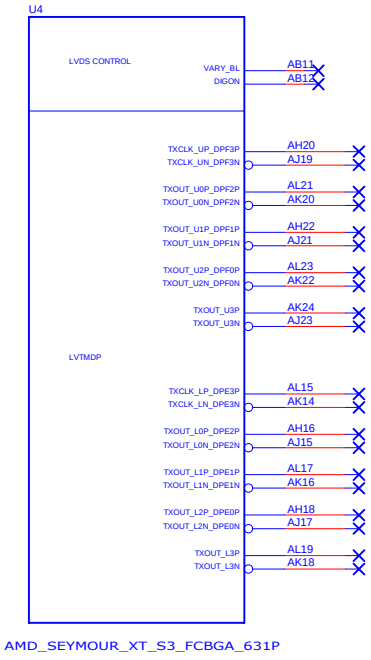

INVENTEC

TITLE			
MODEL,PROJECT,FUNCTION SEYMOUR XT-S3			
SIZE A3	CODE CS	DOC.NUMBER 1310xxxxx-0-0	REV X01

CHANGE by XXX DATE 21-OCT-2002 SHEET 52 of 57

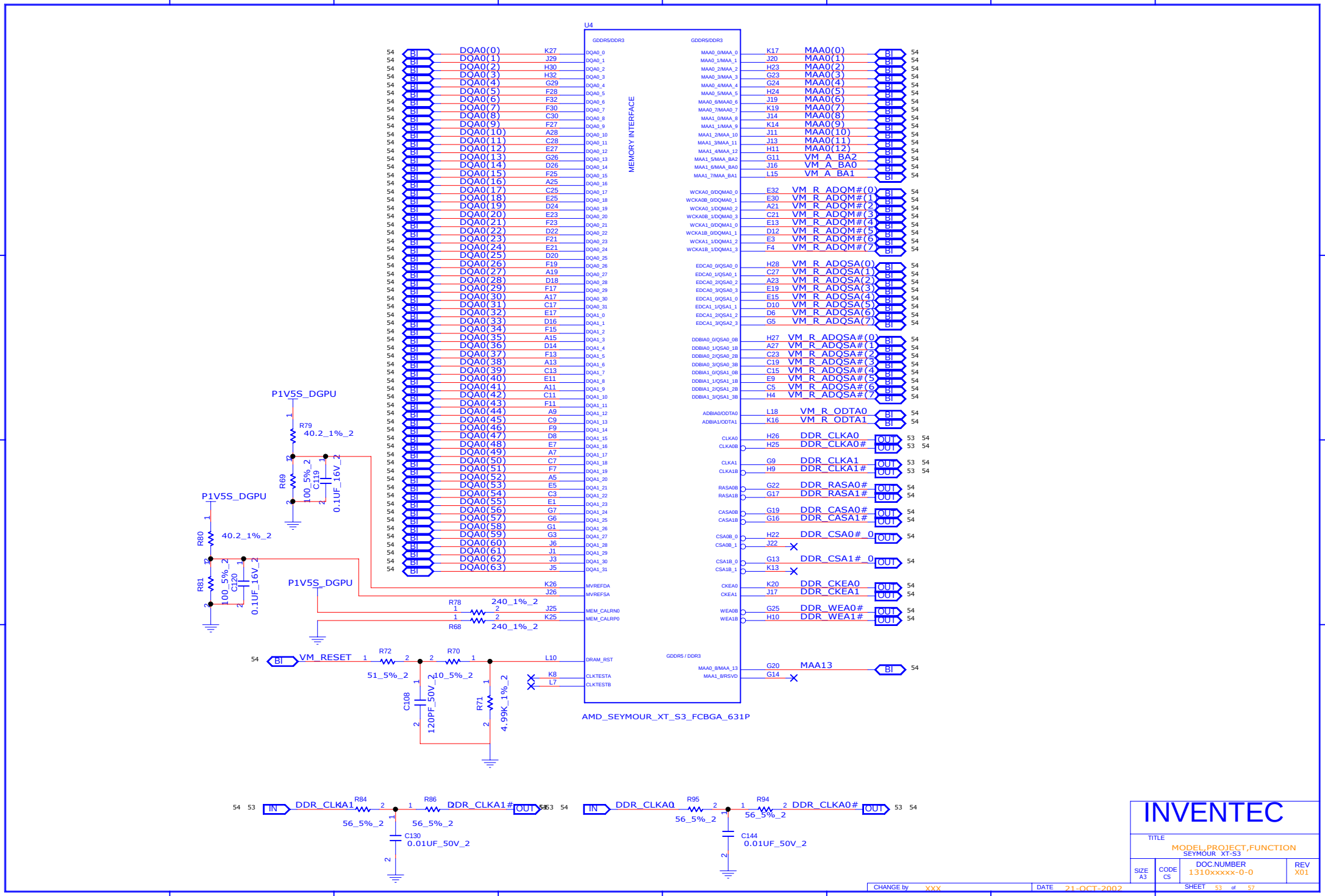
U4
GDDR5/DDR3
MEMORY INTERFACE
AMD_SEYMOUR_XT_S3_FCBGA_631P
DQA0(0) K27
DQA0(1) J29
DQA0(2) H30
DQA0(3) H32
DQA0(4) G29
DQA0(5) F28
DQA0(6) F32
DQA0(7) F30
DQA0(8) C30
DQA0(9) F27
DQA0(10) A28
DQA0(11) C28
DQA0(12) E27
DQA0(13) G26
DQA0(14) D26
DQA0(15) F25
DQA0(16) A25
DQA0(17) C25
DQA0(18) E25
DQA0(19) D24
DQA0(20) E23
DQA0(21) F23
DQA0(22) D22
DQA0(23) F21
DQA0(24) E21
DQA0(25) D20
DQA0(26) F19
DQA0(27) A19
DQA0(28) D18
DQA0(29) F17
DQA0(30) A17
DQA0(31) C17
DQA0(32) E17
DQA0(33) D16
DQA0(34) F15
DQA0(35) A15
DQA0(36) D14
DQA0(37) F13
DQA0(38) A13
DQA0(39) C13
DQA0(40) E11
DQA0(41) A11
DQA0(42) C11
DQA0(43) F11
DQA0(44) A9
DQA0(45) C9
DQA0(46) F9
DQA0(47) D8
DQA0(48) E7
DQA0(49) A7
DQA0(50) C7
DQA0(51) F7
DQA0(52) A5
DQA0(53) E5
DQA0(54) C3
DQA0(55) E1
DQA0(56) G7
DQA0(57) G6
DQA0(58) G1
DQA0(59) G3
DQA0(60) J6
DQA0(61) J1
DQA0(62) J3
DQA0(63) J5
MAA0(0) K17
MAA0(1) J20
MAA0(2) H23
MAA0(3) G23
MAA0(4) G24
MAA0(5) H24
MAA0(6) J19
MAA0(7) K19
MAA0(8) J14
MAA0(9) K14
MAA0(10) J11
MAA0(11) J13
MAA0(12) H11
VM_A_BA2 G11
VM_A_BA0 J16
VM_A_BA1 L15
VM_R_ADQM#(0) E32
VM_R_ADQM#(1) E30
VM_R_ADQM#(2) A21
VM_R_ADQM#(3) C21
VM_R_ADQM#(4) E13
VM_R_ADQM#(5) D12
VM_R_ADQM#(6) E3
VM_R_ADQM#(7) F4
VM_R_ADQSA(0) H28
VM_R_ADQSA(1) C27
VM_R_ADQSA(2) A23
VM_R_ADQSA(3) E19
VM_R_ADQSA(4) E15
VM_R_ADQSA(5) D10
VM_R_ADQSA(6) D6
VM_R_ADQSA(7) G5
VM_R_ADQSA#(0) H27
VM_R_ADQSA#(1) A27
VM_R_ADQSA#(2) C23
VM_R_ADQSA#(3) C19
VM_R_ADQSA#(4) C15
VM_R_ADQSA#(5) E9
VM_R_ADQSA#(6) C5
VM_R_ADQSA#(7) H4
VM_R_ODTA0 L18
VM_R_ODTA1 K16
DDR_CLKA0 H26
DDR_CLKA0# H25
DDR_CLKA1 G9
DDR_CLKA1# H9
DDR_RASA0# G22
DDR_RASA1# G17
DDR_CASA0# G19
DDR_CASA1# G16
DDR_CSA0#_0 H22
DDR_CSA1#_0 G13
DDR_CKEA0 K20
DDR_CKEA1 J17
DDR_WEA0# G25
DDR_WEA1# H10
MAA13 G20
MVREFDA K26
MVREFSA J26
MEM_CALRN0 J25
MEM_CALRP0 K25
DRAM_RST L10
CLKTESTA K8
CLKTESTB L7
P1V5S_DGPU
R79 40.2_1%_2
R69 100_5%_2
C119 0.1UF_16V_2
R80 40.2_1%_2
R81 100_5%_2
C120 0.1UF_16V_2
R78 240_1%_2
R68 240_1%_2
VM_RESET
R72 51_5%_2
R70 10_5%_2
C108 120PF_50V_2
R71 4.99K_1%_2
DDR_CLKA1
R84 56_5%_2
R86 56_5%_2
C130 0.01UF_50V_2
DDR_CLKA1#
DDR_CLKA0
R95 56_5%_2
R94 56_5%_2
C144 0.01UF_50V_2
DDR_CLKA0#
INVENTEC
TITLE
MODEL,PROJECT,FUNCTION
SEYMOUR XT-S3
SIZE A3
CODE CS
DOC.NUMBER 1310xxxxx-0-0
REV X01
SHEET 53 of 57
CHANGE by XXX
DATE 21-OCT-2002

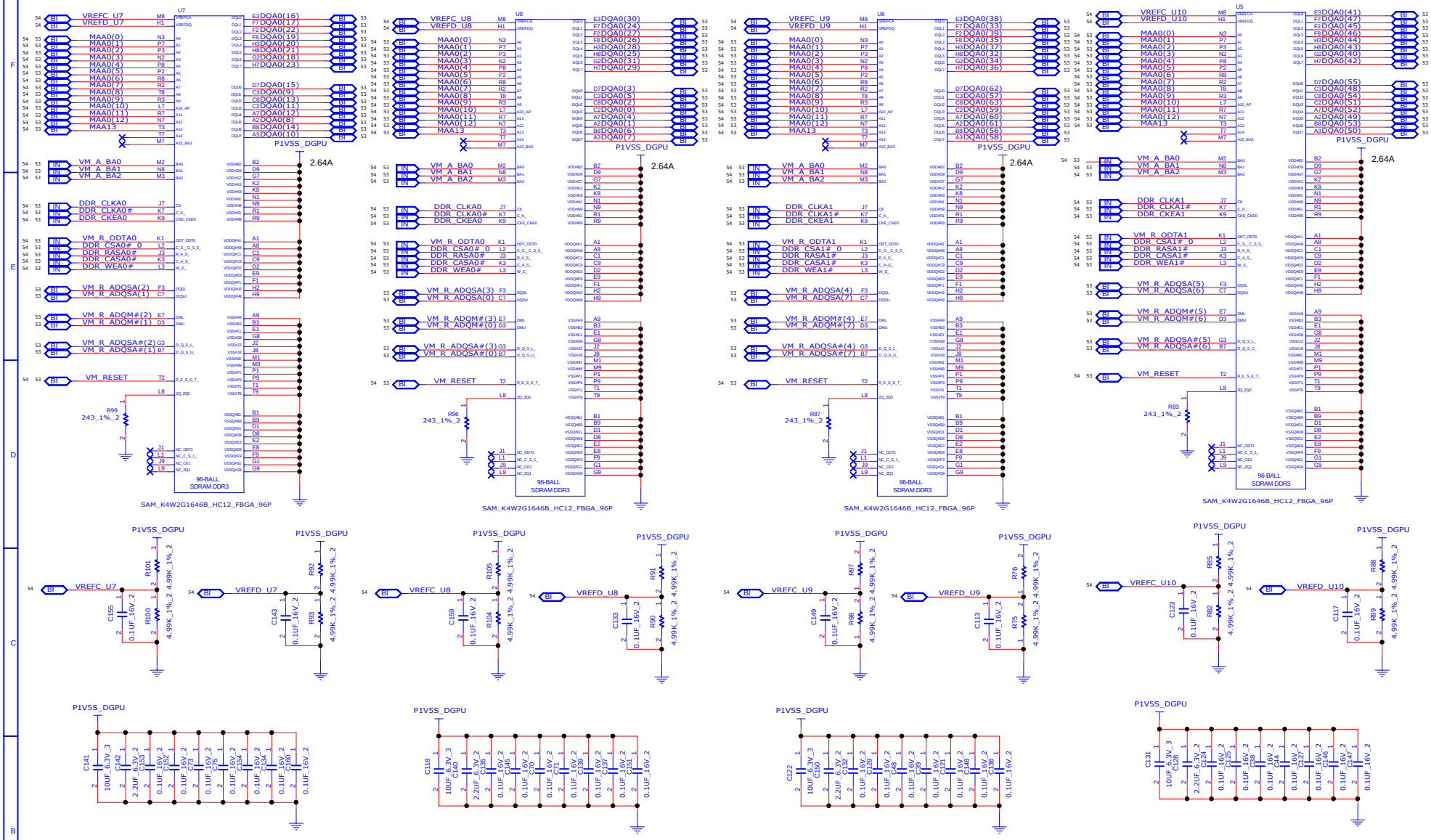

HYNIX 1GB D-DIE PN : 6019B0938301

SAMSUNG 1GB C-DIE PN : 6019B0818601

INVENTEC

TITLE: MODEL,PROJECT,FUNCTION
VRAM DDR3

SIZE	CODE	DOC.NUMBER	REV
C	CS	1310xxxxx-0-0	X01

CHANGE by XXX DATE 21-OCT-2002

SHEET 54 of 57

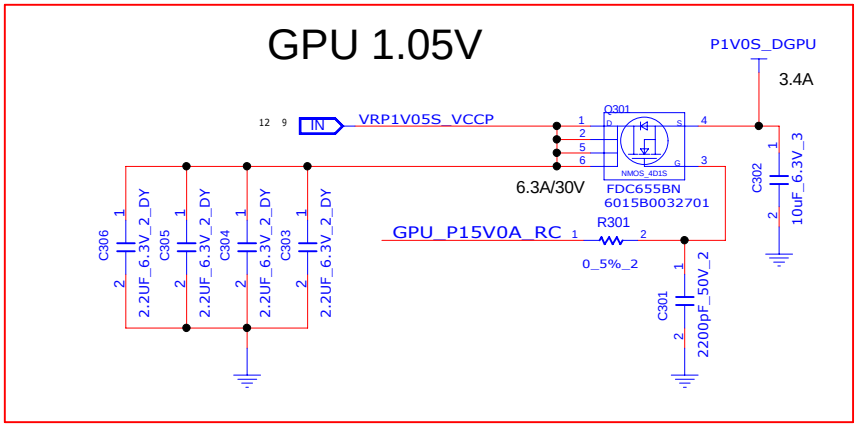

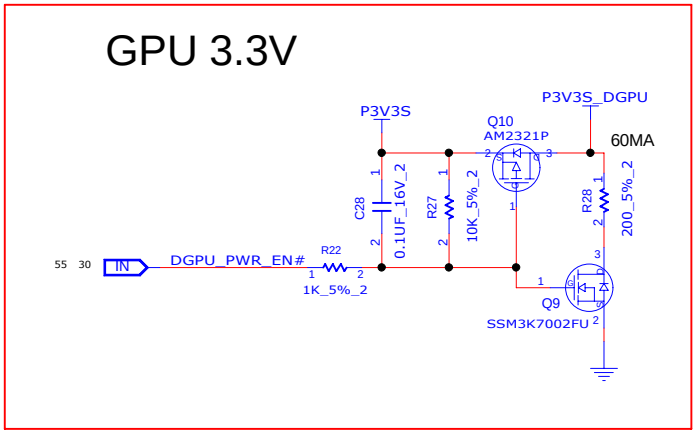

DEFULT IS PX5.0

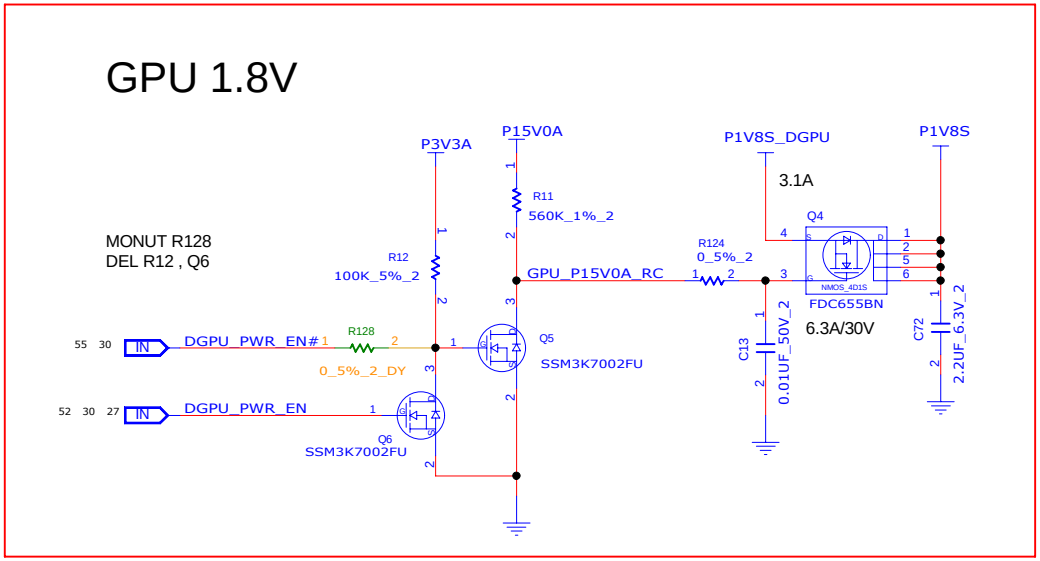

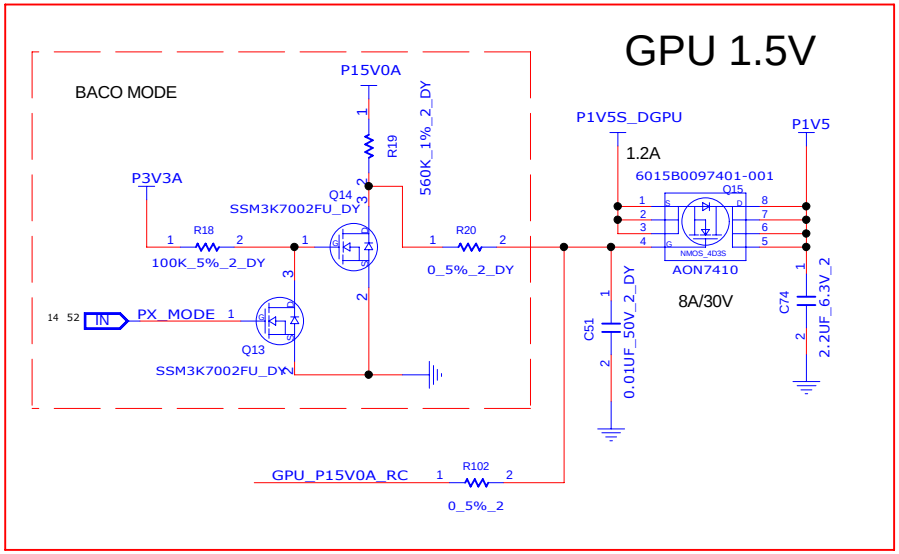

INVENTEC

TITLE
MODEL,PROJECT,FUNCTION
DGPU POWER EE

SIZE	CODE	DOC.NUMBER	REV
A3	CS	1310xxxxx-0-0	X01

CHANGE by XXX DATE 21-OCT-2002 SHEET 55 of 57

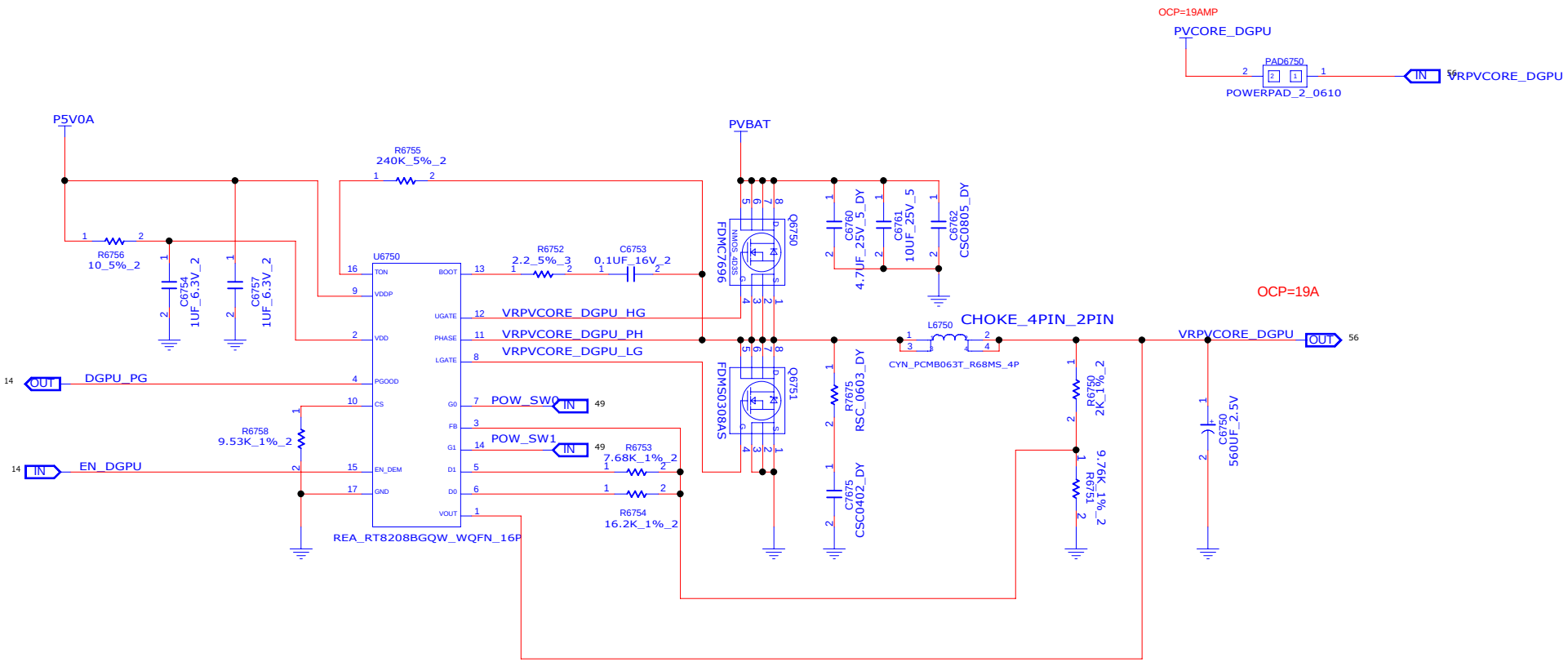

P.S. R6750(R1)R6751(R2)R6753(R3)R6754(R4)

RT8208A		RT8208B		Output Voltage Equation
G0	G1	G0	G1	
0	0	1	1	$V_{OUT} = \frac{R1+R2}{R2} \times 0.75$
1	0	0	1	$V_{OUT} = \frac{R1+(R2//R3)}{(R2//R3)} \times 0.75$
0	1	1	0	$V_{OUT} = \frac{R1+(R2//R4)}{(R2//R4)} \times 0.75$
1	1	0	0	$V_{OUT} = \frac{R1+(R2//R3//R4)}{(R2//R3//R4)} \times 0.75$

INVENTEC

TITLE
MODEL,PROJECT,FUNCTION
DGPU POWER

SIZE	CODE	DOC.NUMBER	REV
A3	CS	1310xxxxx-0-0	X01

CHANGE by XXX DATE 21-OCT-2002 SHEET 56 of 57

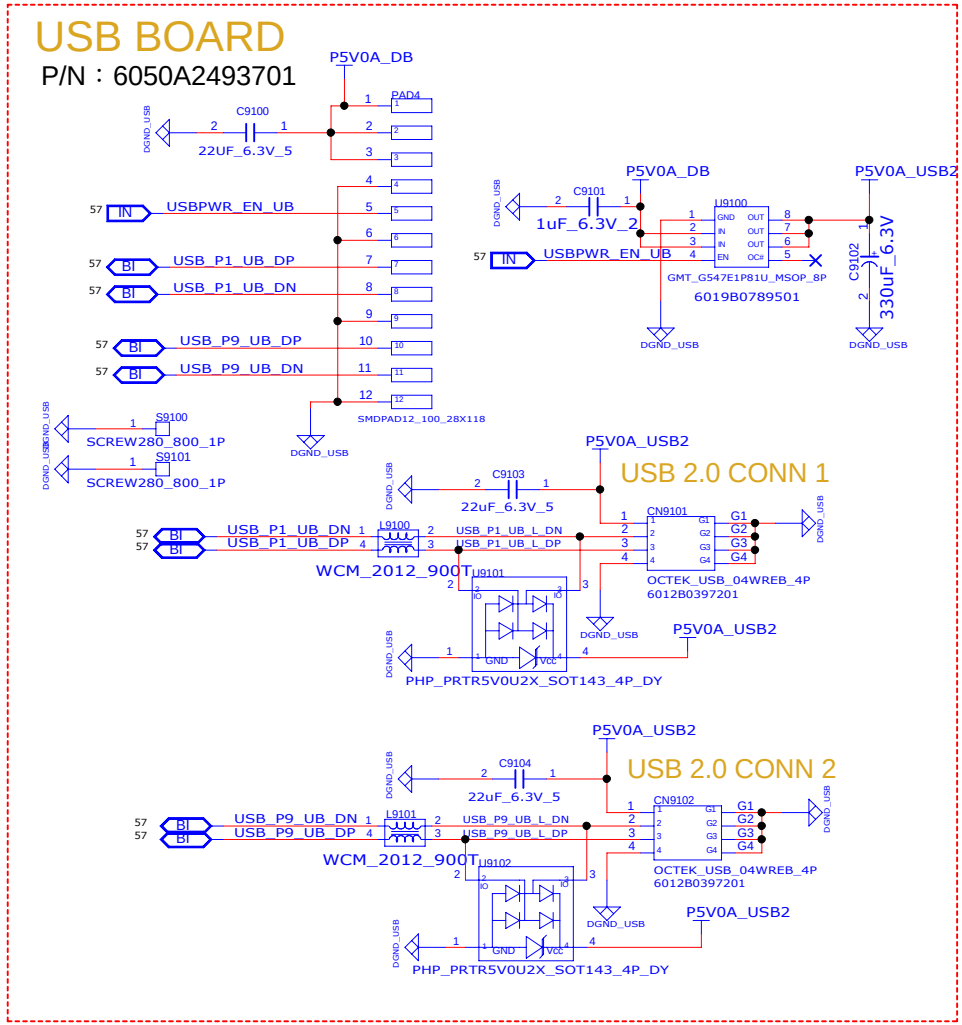

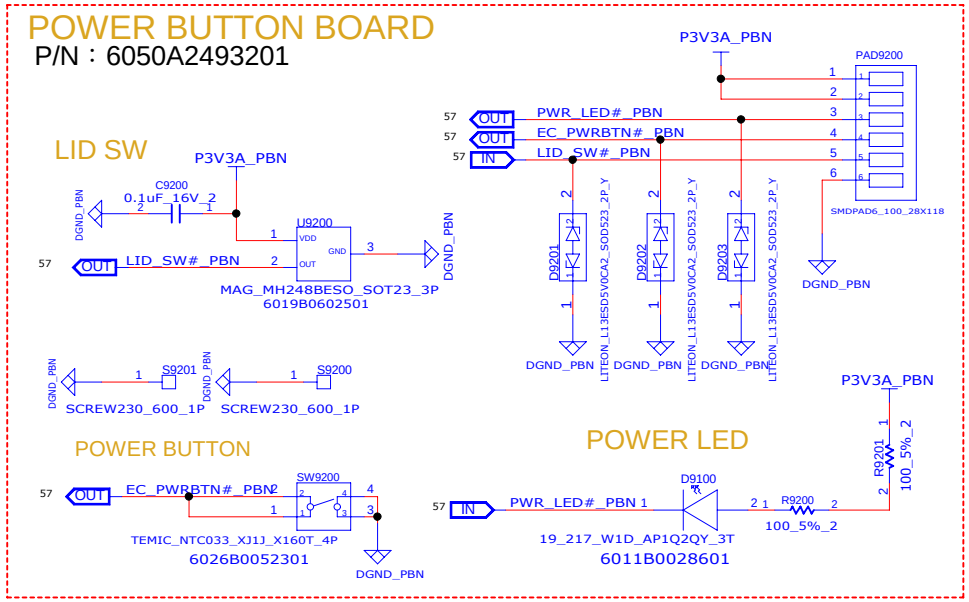

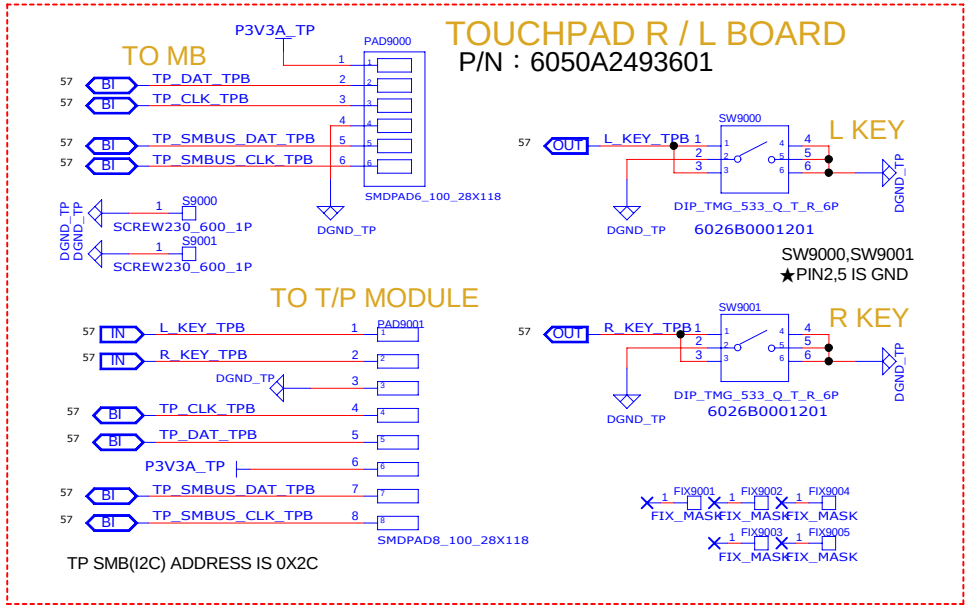

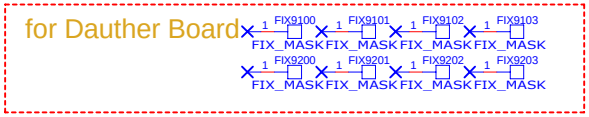

INVENTEC

TITLE
MODEL,PROJECT,FUNCTION
USB, POWER BUTTON DB

SIZE	CODE	DOC.NUMBER	REV
A3	CS	1310xxxxx-0-0	X01

CHANGE by XXX DATE 21-OCT-2002 SHEET 57 of 57