THIS DRAWING AND SPECIFICATIONS, HEREIN, ARE THE PROPERTY OF INVENTEC CORPORATION AND SHALL NOT BE REPODUCED, COPIED, OR USED IN WHOLE OR IN PART AS THE BASIS FOR THE MANUFACTURE OR SALE OF ITEMS WITHOUT WRITTEN PERMISSION, INVENTEC CORPORATION 2009 ALL RIGHT RESERVED

HSF Property : **RoHS**

Manaus10R

Pre-MP Build(A02)

2011.03.21

	EE	DATE	POWER	DATE
DRAWER	CHUANG, AMINE	2011-MAR-21	YU, MARK	2011-MAR-21
DESIGN	CHUANG, AMINE	2011-MAR-21	YU, MARK	2011-MAR-21
CHECK	CHUANG, AMINE	2011-MAR-21	YU, MARK	2011-MAR-21
RESPONSIBLE	CHUANG, AMINE	2011-MAR-21	YU, MARK	2011-MAR-21

SIZE = A3 VER : A02

FILE NAME : MN10R-6050A2423501-MB-A02

P/N 6050A2423501

DATE	CHANGE NO.	REV

INVENTEC

TITLE *Manaus10R*
COVER

SIZE	CODE	DOC. NUMBER	REV
A3	WS	*1310A2423501-0-MTR*	*A*

SHEET 1 OF 58

TABLE OF CONTENTS

PAGE
1. COVER PAGE
2. INDEX
3. BLOCK DIAGRAM
4. POWER SEQUENCE BLOCK
5. PCB SCREW
6. SYSTEM POWER
7. SYSTEM POWER
8. SYSTEM POWER
9. SYSTEM POWER
10. SYSTEM POWER
11. SYSTEM POWER
12. SYSTEM POWER
13. BLANK
14. SYSTEM POWER
15. EC
16. K/B TP/B CONN
17. FAN & THERMAL
18. LAN
19. RJ45 & TRANSFORMER
20. AUDIO CODEC
21. AUDIO JACK & INTERNAL SPEAKER
22. SKIP
23. LCM CONN
24. CRT CONN
25. SKIP
26. SKIP
27. SKIP

PAGE
28. SATA HDD/SSD & ODD
29. SKIP
30. SKIP
31. SKIP
32. WLAN/DEBUG CARD
33. SKIP
34. HALL SENSOR
35. LED
36. SKIP
37. DDR3 DIMM0
38. DDR3 DIMM1
39. CPU1
40. CPU2
41. CPU3
42. CPU4
43. CPU5
44. CPU6
45. PCH1
46. PCH2
47. PCH3
48. PCH4
49. PCH5
50. PCH6
51. PCH7
52. PCH8
53. PCH9
54. PICK BUTTON

PAGE
55. SKIP
56. POWER BUTTON BOARD
57. CARDREADER & USB
58. EMI

CHANGE by	Chuang, Amine	21-Mar-2011

INVENTEC

TITLE Manaus10R
INDEX

SIZE	CODE	DOC. NUMBER	REV
A3	WS	1310A2423501-0-MT	A

SHEET 2 OF 58

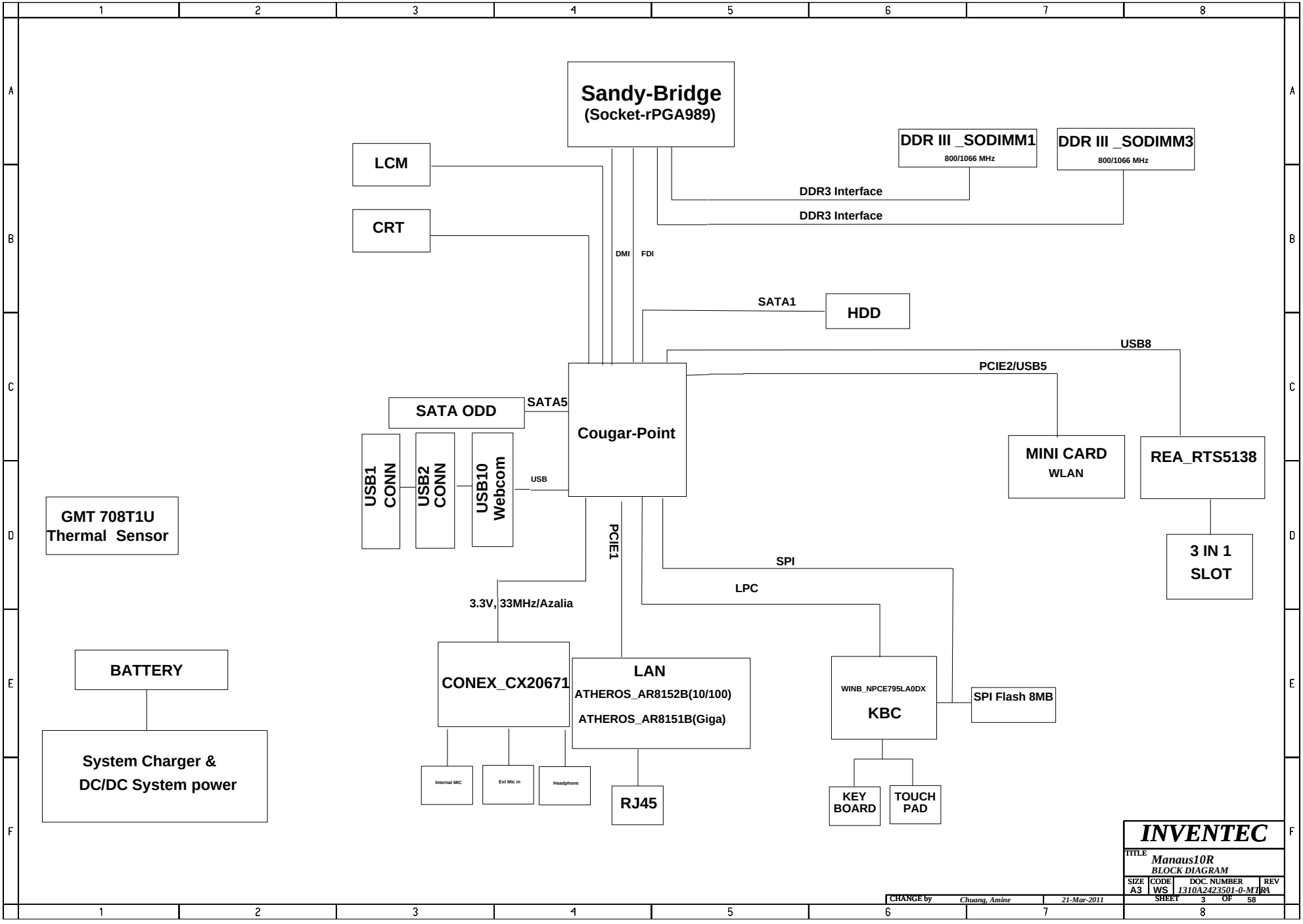
Sandy-Bridge
(Socket-rPGA989)
DDR III _SODIMM1
800/1066 MHz
DDR III _SODIMM3
800/1066 MHz
LCM
CRT
DDR3 Interface
DDR3 Interface
DMI
FDI
SATA1
HDD
USB8
PCIE2/USB5
SATA ODD
SATA5
Cougar-Point
USB1 CONN
USB2 CONN
USB10 Webcom
USB
MINI CARD
WLAN
REA_RTS5138
3 IN 1
SLOT
GMT 708T1U
Thermal Sensor
PCIE1
SPI
LPC
3.3V, 33MHz/Azalia
BATTERY
CONEX_CX20671
LAN
ATHEROS_AR8152B(10/100)
ATHEROS_AR8151B(Giga)
WINB_NPCE795LA0DX
KBC
SPI Flash 8MB
System Charger &
DC/DC System power
Internal MIC
Ext Mic in
Headphone
RJ45
KEY BOARD
TOUCH PAD
INVENTEC
TITLE
Manaus10R
BLOCK DIAGRAM
SIZE A3
CODE WS
DOC. NUMBER 1310A2423501-0-MTRA
REV A
SHEET 3 OF 58
CHANGE by Chuang, Amine
21-Mar-2011

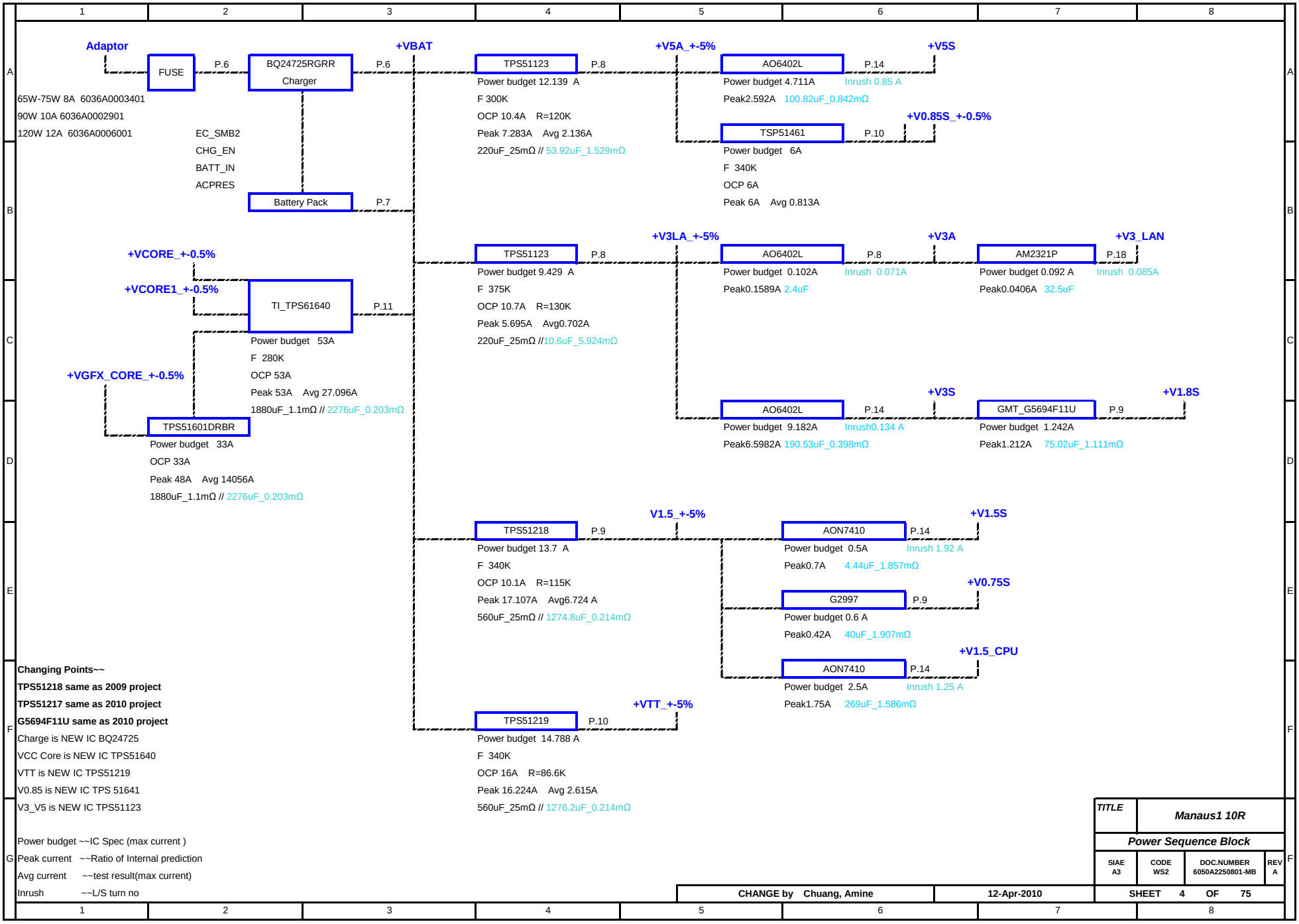
Adaptor
FUSE
P.6
BQ24725RGRR
Charger
P.6
+VBAT
65W-75W 8A 6036A0003401
90W 10A 6036A0002901
120W 12A 6036A0006001
EC_SMB2
CHG_EN
BATT_IN
ACPRES
Battery Pack
P.7
TPS51123
P.8
Power budget 12.139 A
F 300K
OCP 10.4A R=120K
Peak 7.283A Avg 2.136A
220uF_25mΩ // 53.92uF_1.529mΩ
+V5A_+-5%
AO6402L
P.14
+V5S
Power budget 4.711A
Inrush 0.85 A
Peak2.592A 100.82uF_0.842mΩ
+V0.85S_+-0.5%
TSP51461
P.10
Power budget 6A
F 340K
OCP 6A
Peak 6A Avg 0.813A
+VCORE_+-0.5%
+VCORE1_+-0.5%
TI_TPS61640
P.11
Power budget 53A
F 280K
OCP 53A
Peak 53A Avg 27.096A
1880uF_1.1mΩ // 2276uF_0.203mΩ
+VGFX_CORE_+-0.5%
TPS51601DRBR
Power budget 33A
OCP 33A
Peak 48A Avg 14056A
1880uF_1.1mΩ // 2276uF_0.203mΩ
TPS51123
P.8
Power budget 9.429 A
F 375K
OCP 10.7A R=130K
Peak 5.695A Avg0.702A
220uF_25mΩ //10.6uF_5.924mΩ
+V3LA_+-5%
AO6402L
P.8
+V3A
Power budget 0.102A
Inrush 0.071A
Peak0.1589A 2.4uF
AM2321P
P.18
+V3_LAN
Power budget 0.092 A
Inrush 0.085A
Peak0.0406A 32.5uF
AO6402L
P.14
+V3S
Power budget 9.182A
Inrush0.134 A
Peak6.5982A 190.53uF_0.398mΩ
GMT_G5694F11U
P.9
+V1.8S
Power budget 1.242A
Peak1.212A 75.02uF_1.111mΩ
TPS51218
P.9
V1.5_+-5%
Power budget 13.7 A
F 340K
OCP 10.1A R=115K
Peak 17.107A Avg6.724 A
560uF_25mΩ // 1274.8uF_0.214mΩ
AON7410
P.14
+V1.5S
Power budget 0.5A
Inrush 1.92 A
Peak0.7A 4.44uF_1.857mΩ
G2997
P.9
+V0.75S
Power budget 0.6 A
Peak0.42A 40uF_1.907mΩ
AON7410
P.14
+V1.5_CPU
Power budget 2.5A
Inrush 1.25 A
Peak1.75A 269uF_1.586mΩ
TPS51219
P.10
+VTT_+-5%
Power budget 14.788 A
F 340K
OCP 16A R=86.6K
Peak 16.224A Avg 2.615A
560uF_25mΩ // 1276.2uF_0.214mΩ
Changing Points~~
TPS51218 same as 2009 project
TPS51217 same as 2010 project
G5694F11U same as 2010 project
Charge is NEW IC BQ24725
VCC Core is NEW IC TPS51640
VTT is NEW IC TPS51219
V0.85 is NEW IC TPS 51641
V3_V5 is NEW IC TPS51123
Power budget ~~IC Spec (max current)
Peak current ~~Ratio of Internal prediction
Avg current ~~test result(max current)
Inrush ~~L/S turn no
TITLE
Manaus1 10R
Power Sequence Block
SIAE A3
CODE WS2
DOC.NUMBER 6050A2250801-MB
REV A
CHANGE by Chuang, Amine
12-Apr-2010
SHEET 4 OF 75

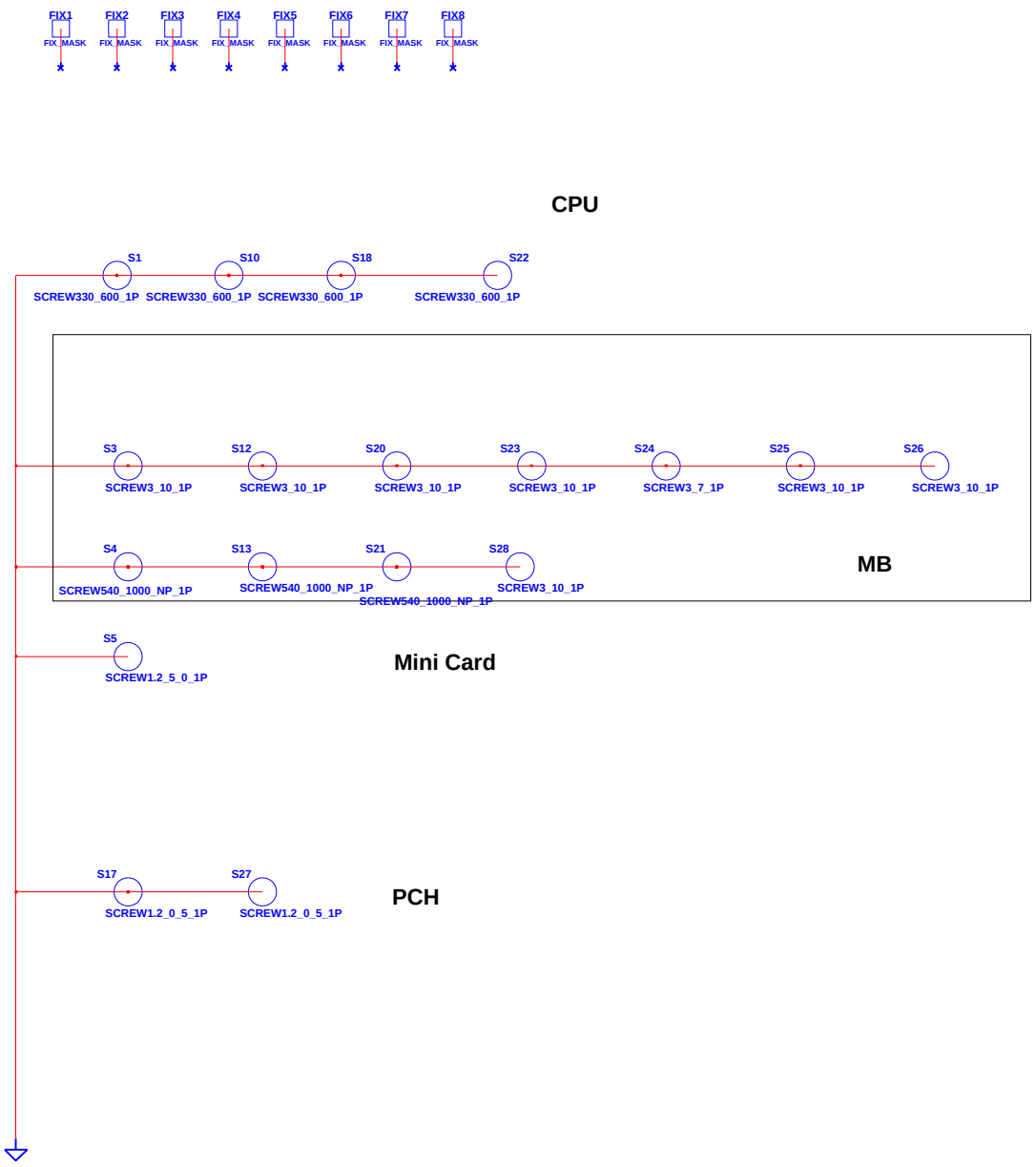

INVENTEC			
TITLE Manaus10R SCREW			
SIZE A3	CODE CS	DOC. NUMBER 1310A2423501-0-MTRA	REV A
		SHEET 5 OF 58	

CHANGE by Chuang, Amine 21-Mar-2011

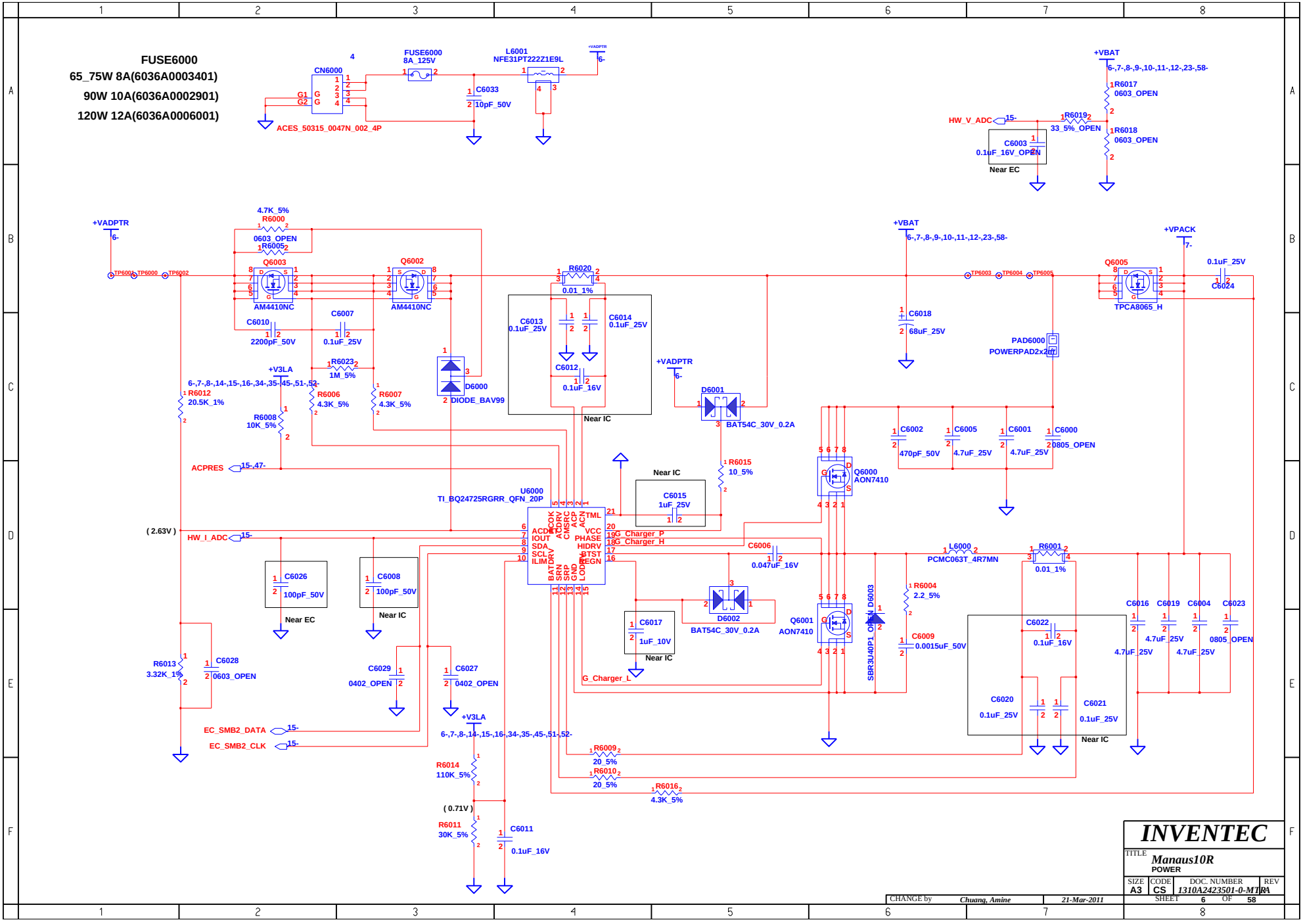
FUSE6000
65_75W 8A(6036A0003401)
90W 10A(6036A0002901)
120W 12A(6036A0006001)
CN6000
ACES_50315_0047N_002_4P
FUSE6000
8A_125V
L6001
NFE31PT222Z1E9L
C6033
10pF_50V
+VADPTR
+VBAT
6-,7-,8-,9-,10-,11-,12-,23-,58-
R6017
0603_OPEN
R6018
0603_OPEN
R6019
33_5%_OPEN
HW_V_ADC
C6003
0.1uF_16V_OPEN
Near EC
+VPACK
7-
R6000
4.7K_5%
R6005
0603_OPEN
Q6003
AM4410NC
Q6002
AM4410NC
Q6005
TPCA8065_H
C6024
0.1uF_25V
C6010
2200pF_50V
C6007
0.1uF_25V
R6020
0.01_1%
C6013
0.1uF_25V
C6014
0.1uF_25V
C6012
0.1uF_16V
Near IC
C6018
68uF_25V
PAD6000
POWERPAD2x2
R6023
1M_5%
+V3LA
6-,7-,8-,14-,15-,16-,34-,35-,45-,51-,52-
R6012
20.5K_1%
R6006
4.3K_5%
R6007
4.3K_5%
D6000
DIODE_BAV99
R6008
10K_5%
ACPRES
15-,47-
D6001
BAT54C_30V_0.2A
R6015
10_5%
C6002
470pF_50V
C6005
4.7uF_25V
C6001
4.7uF_25V
C6000
0805_OPEN
Q6000
AON7410
C6015
1uF_25V
U6000
TI_BQ24725RGRR_QFN_20P
(2.63V)
HW_I_ADC
15-
ACDET
IOUT
SDA
SCL
ILIM
BATDRV
ACOK
ACDRV
CMSRC
CMSRP
CMDRV
ACN
ACP
CTRL
VCC
PHASE
HIDRV
BTST
REGN
LODRV
SRN
SRP
G_Charger_P
G_Charger_H
C6006
0.047uF_16V
L6000
PCMC063T_4R7MN
R6001
0.01_1%
C6026
100pF_50V
Near EC
C6008
100pF_50V
Near IC
D6002
BAT54C_30V_0.2A
Q6001
AON7410
SBR3U40P1_OPN_D6003
R6004
2.2_5%
C6009
0.0015uF_50V
C6016
C6019
C6004
C6023
4.7uF_25V
0805_OPEN
C6017
1uF_10V
G_Charger_L
C6022
0.1uF_16V
C6020
0.1uF_25V
C6021
0.1uF_25V
R6013
3.32K_1%
C6028
0603_OPEN
C6029
0402_OPEN
C6027
0402_OPEN
EC_SMB2_DATA
EC_SMB2_CLK
R6014
110K_5%
(0.71V)
R6011
30K_5%
C6011
0.1uF_16V
R6009
20_5%
R6010
20_5%
R6016
4.3K_5%
INVENTEC
TITLE
Manaus10R
POWER
SIZE A3
CODE CS
DOC. NUMBER 1310A2423501-0-MTRA
REV A
SHEET 6 OF 58
CHANGE by Chuang, Amine
21-Mar-2011

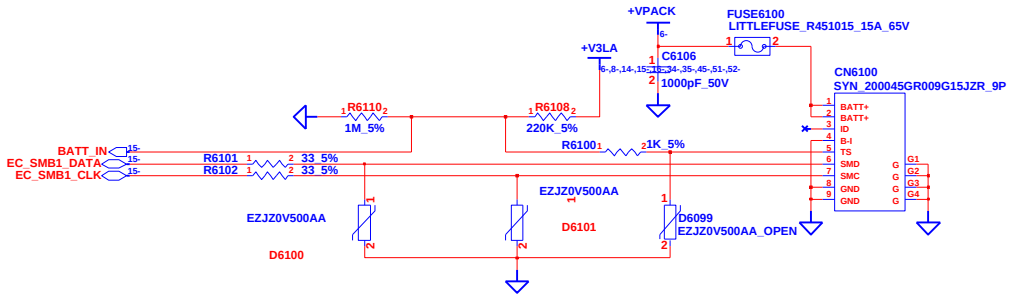

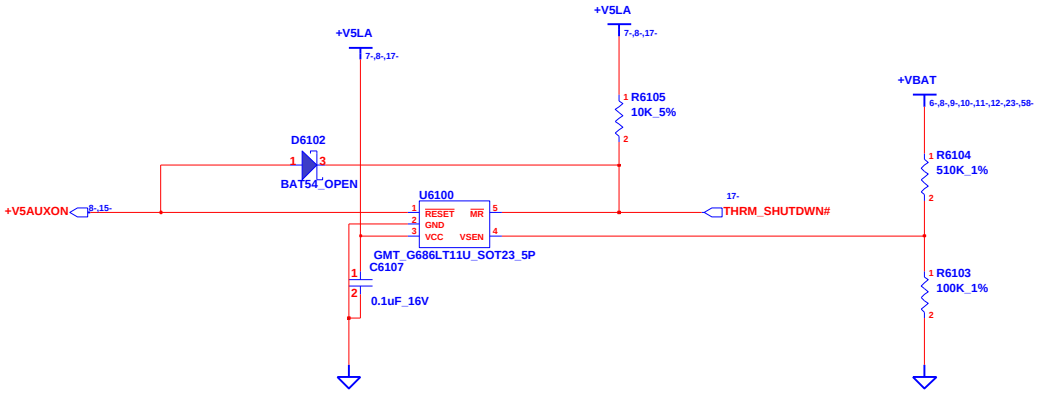

INVENTEC

TITLE **Manaus10R**
POWER

SIZE	CODE	DOC. NUMBER	REV
A3	CS	1310A2423501-0-MTRA	A

SHEET 7 OF 58

CHANGE by	Chuang, Amine	21-Mar-2011

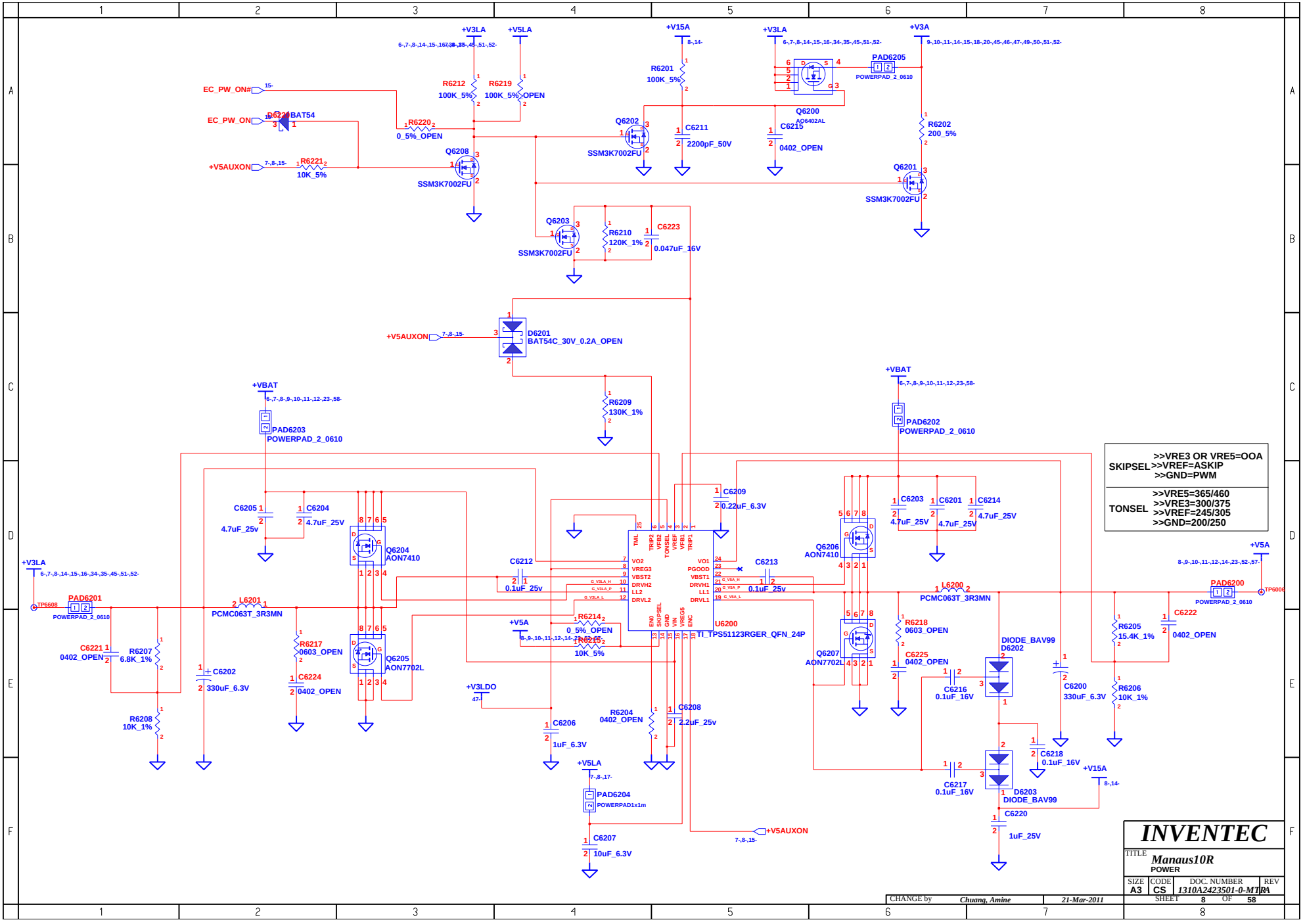
EC_PW_ON#
EC_PW_ON
+V5AUXON
D6214 BAT54
R6212 100K_5%
R6219 100K_5% OPEN
R6220 0_5%_OPEN
R6221 10K_5%
Q6208 SSM3K7002FU
+V3LA
+V5LA
+V15A
R6201 100K_5%
Q6202 SSM3K7002FU
C6211 2200pF_50V
Q6200 AO6402AL
C6215 0402_OPEN
PAD6205 POWERPAD_2_0610
+V3A
R6202 200_5%
Q6201 SSM3K7002FU
Q6203 SSM3K7002FU
R6210 120K_1%
C6223 0.047uF_16V
D6201 BAT54C_30V_0.2A_OPEN
R6209 130K_1%
+VBAT
PAD6203 POWERPAD_2_0610
PAD6202 POWERPAD_2_0610
C6205 4.7uF_25v
C6204 4.7uF_25V
Q6204 AON7410
Q6205 AON7702L
C6212 0.1uF_25v
C6209 0.22uF_6.3V
C6213 0.1uF_25v
U6200 TI_TPS51123RGER_QFN_24P
TIML
TRIP2
VFB2
TONSEL
VREG5
VFB1
TRIP1
VO2
VREG3
VBST2
DRVH2
LL2
DRVL2
VO1
PGOOD
VBST1
DRVH1
LL1
DRVL1
EN0
SKIPSEL
GND
VIN
VREG5
ENC
R6214 0_5%_OPEN
R6215 10K_5%
+V5A
+V3LDO
R6204 0402_OPEN
C6208 2.2uF_25v
C6206 1uF_6.3V
+V5LA
PAD6204 POWERPAD1x1m
C6207 10uF_6.3V
+V5AUXON
C6203 4.7uF_25V
C6201 4.7uF_25V
C6214 4.7uF_25V
Q6206 AON7410
Q6207 AON7702L
L6200 PCMC063T_3R3MN
L6201 PCMC063T_3R3MN
PAD6201 POWERPAD_2_0610
TP6608
C6221 0402_OPEN
R6207 6.8K_1%
R6208 10K_1%
C6202 330uF_6.3V
R6217 0603_OPEN
C6224 0402_OPEN
R6218 0603_OPEN
C6225 0402_OPEN
C6216 0.1uF_16V
C6217 0.1uF_16V
DIODE_BAV99 D6202
D6203 DIODE_BAV99
C6200 330uF_6.3V
C6218 0.1uF_16V
C6220 1uF_25V
+V15A
PAD6200 POWERPAD_2_0610
TP6006
C6222 0402_OPEN
R6205 15.4K_1%
R6206 10K_1%
SKIPSEL >>VRE3 OR VRE5=OOA
>>VREF=ASKIP
>>GND=PWM
TONSEL >>VRE5=365/460
>>VRE3=300/375
>>VREF=245/305
>>GND=200/250
INVENTEC
TITLE Manaus10R
POWER
SIZE A3
CODE CS
DOC. NUMBER 1310A2423501-0-MTRA
REV A
SHEET 8 OF 58
CHANGE by Chuang, Amine
21-Mar-2011

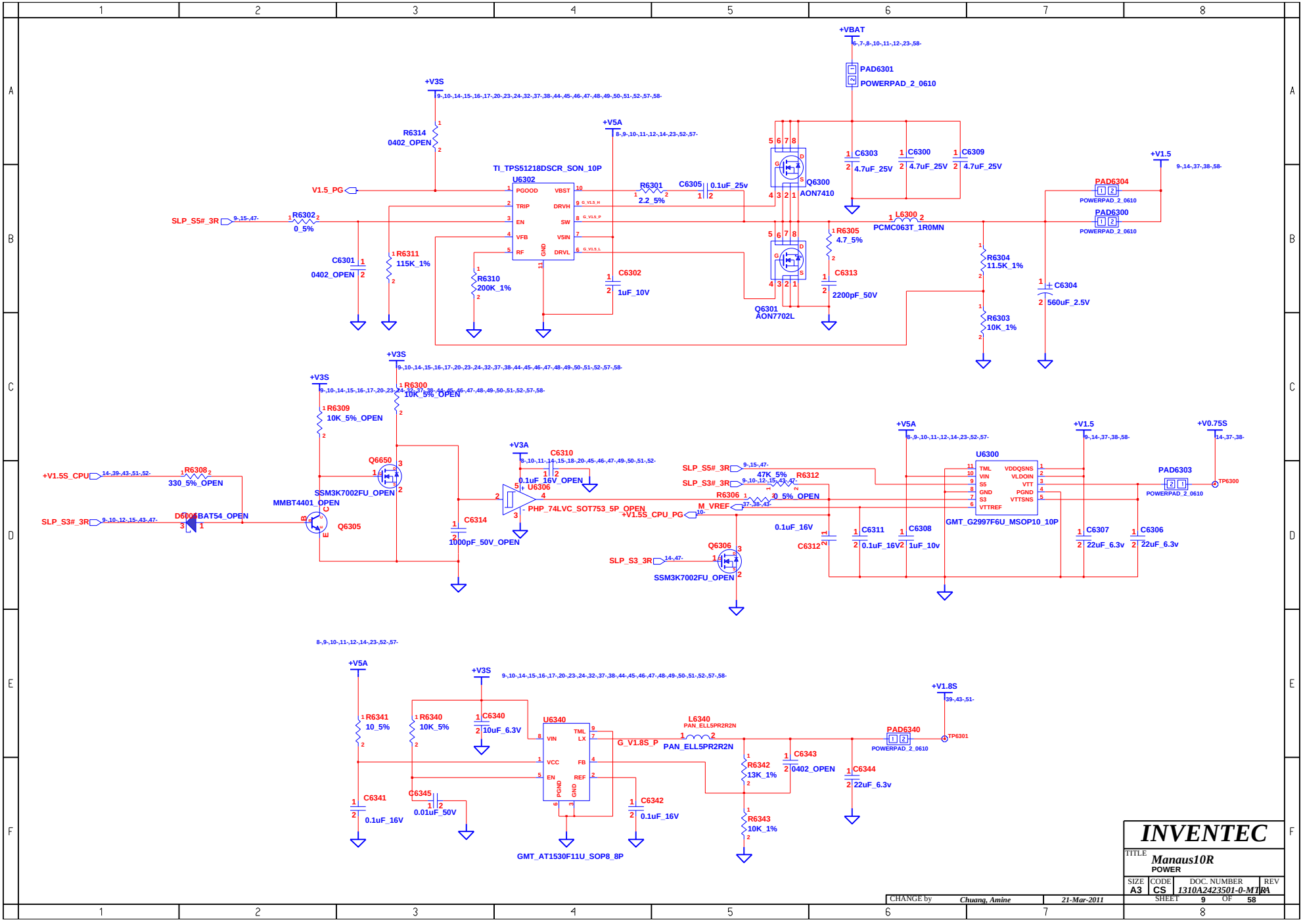

INVENTEC			
TITLE Manaus10R POWER			
SIZE A3	CODE CS	DOC. NUMBER 1310A2423501-0-MTRA	REV A
CHANGE by Chuang, Amine	21-Mar-2011	SHEET 9 OF 58	

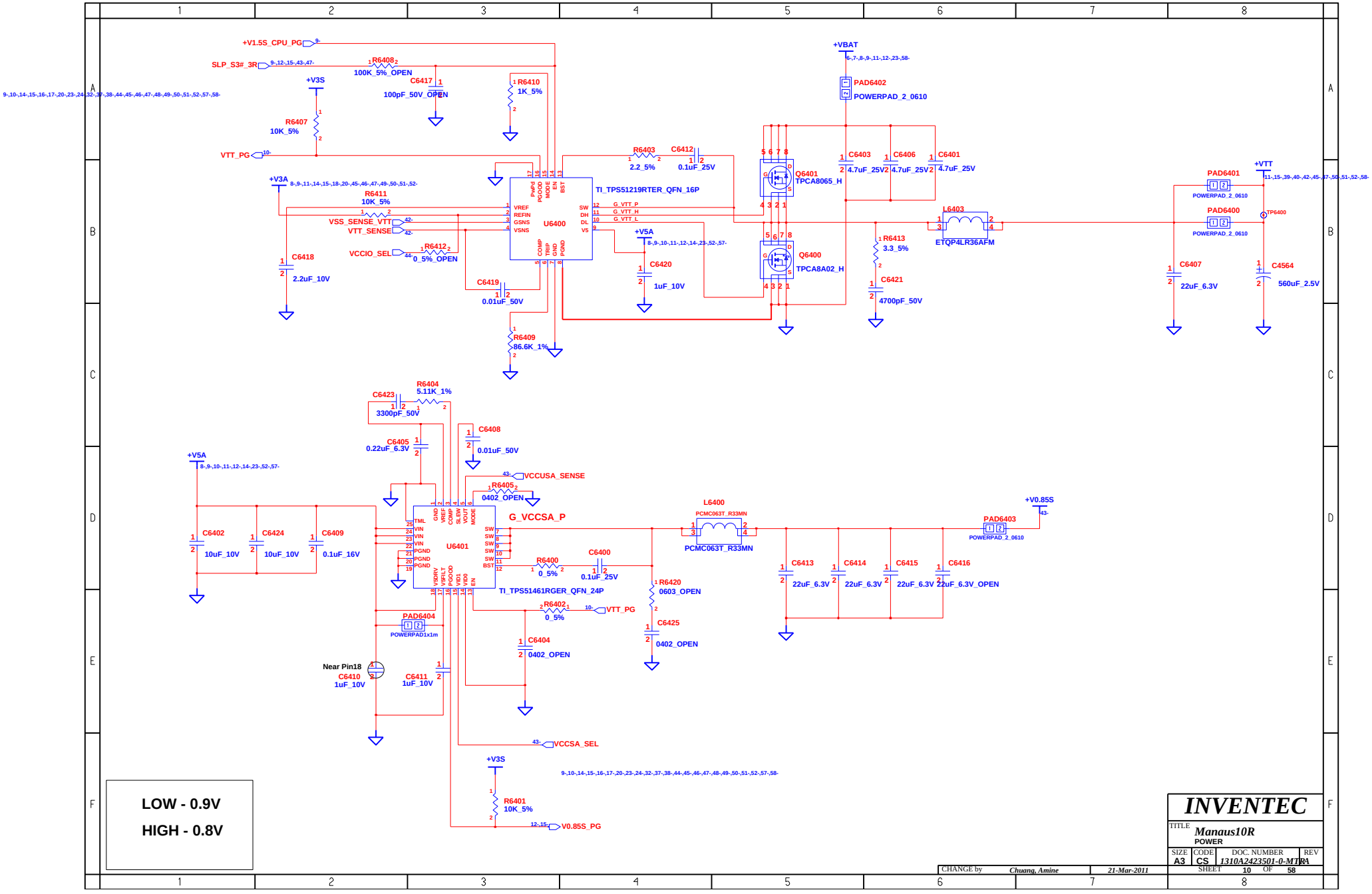
+V1.5S_CPU_PG
SLP_S3#_3R
R6408
100K_5%_OPEN
C6417
100pF_50V_OPEN
R6410
1K_5%
+V3S
R6407
10K_5%
VTT_PG
+V3A
R6411
10K_5%
VSS_SENSE_VTT
VTT_SENSE
VCCIO_SEL
R6412
0_5%_OPEN
C6418
2.2uF_10V
C6419
0.01uF_50V
R6409
86.6K_1%
U6400
TI_TPS51219RTER_QFN_16P
R6403
2.2_5%
C6412
0.1uF_25V
+VBAT
PAD6402
POWERPAD_2_0610
Q6401
TPCA8065_H
C6403
4.7uF_25V
C6406
4.7uF_25V
C6401
4.7uF_25V
Q6400
TPCA8A02_H
+V5A
C6420
1uF_10V
R6413
3.3_5%
C6421
4700pF_50V
L6403
ETQP4LR36AFM
PAD6401
PAD6400
POWERPAD_2_0610
+VTT
TP6400
C6407
22uF_6.3V
C4564
560uF_2.5V
R6404
5.11K_1%
C6423
3300pF_50V
C6405
0.22uF_6.3V
C6408
0.01uF_50V
VCCUSA_SENSE
R6405
0402_OPEN
G_VCCSA_P
U6401
TI_TPS51461RGER_QFN_24P
C6402
10uF_10V
C6424
10uF_10V
C6409
0.1uF_16V
R6400
0_5%
C6400
0.1uF_25V
L6400
PCMC063T_R33MN
+V0.85S
PAD6403
C6413
22uF_6.3V
C6414
22uF_6.3V
C6415
22uF_6.3V
C6416
22uF_6.3V_OPEN
R6420
0603_OPEN
C6425
0402_OPEN
R6402
0_5%
VTT_PG
PAD6404
POWERPAD1x1m
C6404
0402_OPEN
Near Pin18
C6410
1uF_10V
C6411
1uF_10V
VCCSA_SEL
+V3S
R6401
10K_5%
V0.85S_PG
LOW - 0.9V
HIGH - 0.8V
INVENTEC
TITLE
Manaus10R
POWER
SIZE A3
CODE CS
DOC. NUMBER 1310A2423501-0-MTRA
REV A
SHEET 10 OF 58
CHANGE by Chuang, Amine 21-Mar-2011

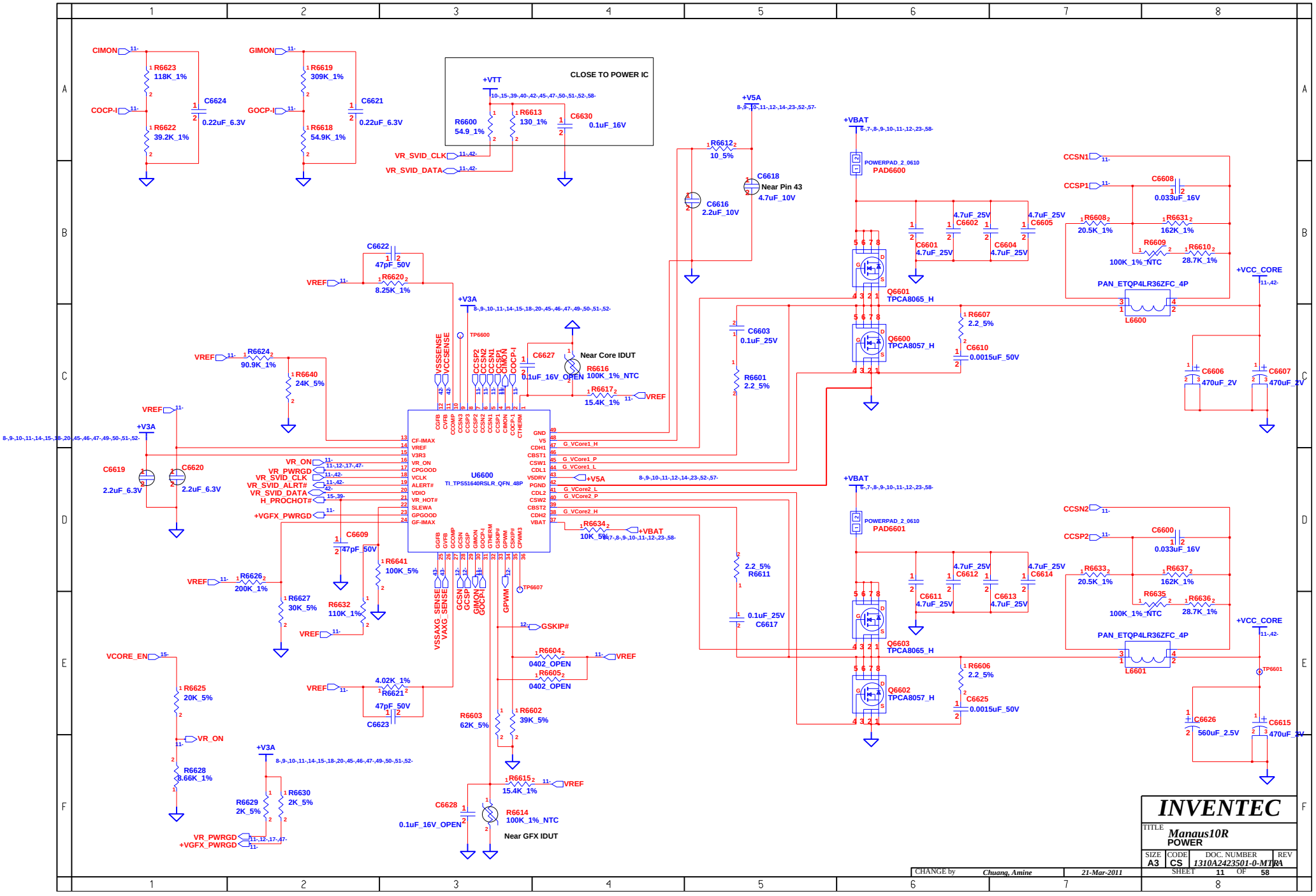
CIMON
COCP-I
R6623 118K_1%
R6622 39.2K_1%
C6624 0.22uF_6.3V
GIMON
GOCP-I
R6619 309K_1%
R6618 54.9K_1%
C6621 0.22uF_6.3V
CLOSE TO POWER IC
+VTT
R6600 54.9_1%
R6613 130_1%
C6630 0.1uF_16V
VR_SVID_CLK
VR_SVID_DATA
+V5A
R6612 10_5%
C6616 2.2uF_10V
C6618 Near Pin 43 4.7uF_10V
+VBAT
POWERPAD_2_0610
PAD6600
PAD6601
Q6601 TPCA8065_H
Q6600 TPCA8057_H
Q6603 TPCA8065_H
Q6602 TPCA8057_H
C6601 4.7uF_25V
C6602 4.7uF_25V
C6604 4.7uF_25V
C6605 4.7uF_25V
C6611 4.7uF_25V
C6612 4.7uF_25V
C6613 4.7uF_25V
C6614 4.7uF_25V
CCSN1
CCSP1
CCSN2
CCSP2
C6608 0.033uF_16V
C6600 0.033uF_16V
R6608 20.5K_1%
R6631 162K_1%
R6609 100K_1%_NTC
R6610 28.7K_1%
R6633 20.5K_1%
R6637 162K_1%
R6635 100K_1%_NTC
R6636 28.7K_1%
PAN_ETQP4LR36ZFC_4P
L6600
L6601
+VCC_CORE
TP6601
C6606 470uF_2V
C6607 470uF_2V
C6626 560uF_2.5V
C6615 470uF_2V
R6607 2.2_5%
C6610 0.0015uF_50V
R6606 2.2_5%
C6625 0.0015uF_50V
C6603 0.1uF_25V
R6601 2.2_5%
R6611 2.2_5%
C6617 0.1uF_25V
C6622 47pF_50V
R6620 8.25K_1%
VREF
+V3A
TP6600
C6627 0.1uF_16V_OPEN
Near Core IDUT
R6616 100K_1%_NTC
R6617 15.4K_1%
R6624 90.9K_1%
R6640 24K_5%
C6619 2.2uF_6.3V
C6620 2.2uF_6.3V
U6600
TI_TPS51640RSLR_QFN_48P
CF-IMAX
VREF
V3R3
VR_ON
CPGOOD
VCLK
ALERT#
VDIO
VR_HOT#
SLEWA
GPGOOD
GF-IMAX
GND
V5
CDH1
CBST1
CSW1
CDL1
V5DRV
PGND
CDL2
CSW2
CBST2
CDH2
VBAT
G_VCore1_H
G_VCore1_L
G_VCore1_P
G_VCore2_L
G_VCore2_P
G_VCore2_H
VSSSENSE
VCCSENSE
CCSP2
CCSN2
CCSN1
CCSP1
CIMON
COCP-I
VR_ON
VR_PWRGD
VR_SVID_CLK
VR_SVID_ALRT#
VR_SVID_DATA
H_PROCHOT#
+VGFX_PWRGD
R6634 10K_5%
C6609 47pF_50V
R6641 100K_5%
R6626 200K_1%
R6627 30K_5%
R6632 110K_1%
VSSAXG_SENSE
VAXG_SENSE
GCSN
GCSP
GIMON
GOCP-I
GPWM
GSKIP#
TP6607
R6604 0402_OPEN
R6605 0402_OPEN
VCORE_EN
R6625 20K_5%
R6628 8.66K_1%
R6621 4.02K_1%
C6623 47pF_50V
R6603 62K_5%
R6602 39K_5%
R6615 15.4K_1%
R6614 100K_1%_NTC
Near GFX IDUT
C6628 0.1uF_16V_OPEN
R6629 2K_5%
R6630 2K_5%
VR_PWRGD
+VGFX_PWRGD
INVENTEC
TITLE
Manaus10R
POWER
SIZE A3
CODE CS
DOC. NUMBER 1310A2423501-0-MTRA
REV
SHEET 11 OF 58
CHANGE by Chuang, Amine 21-Mar-2011

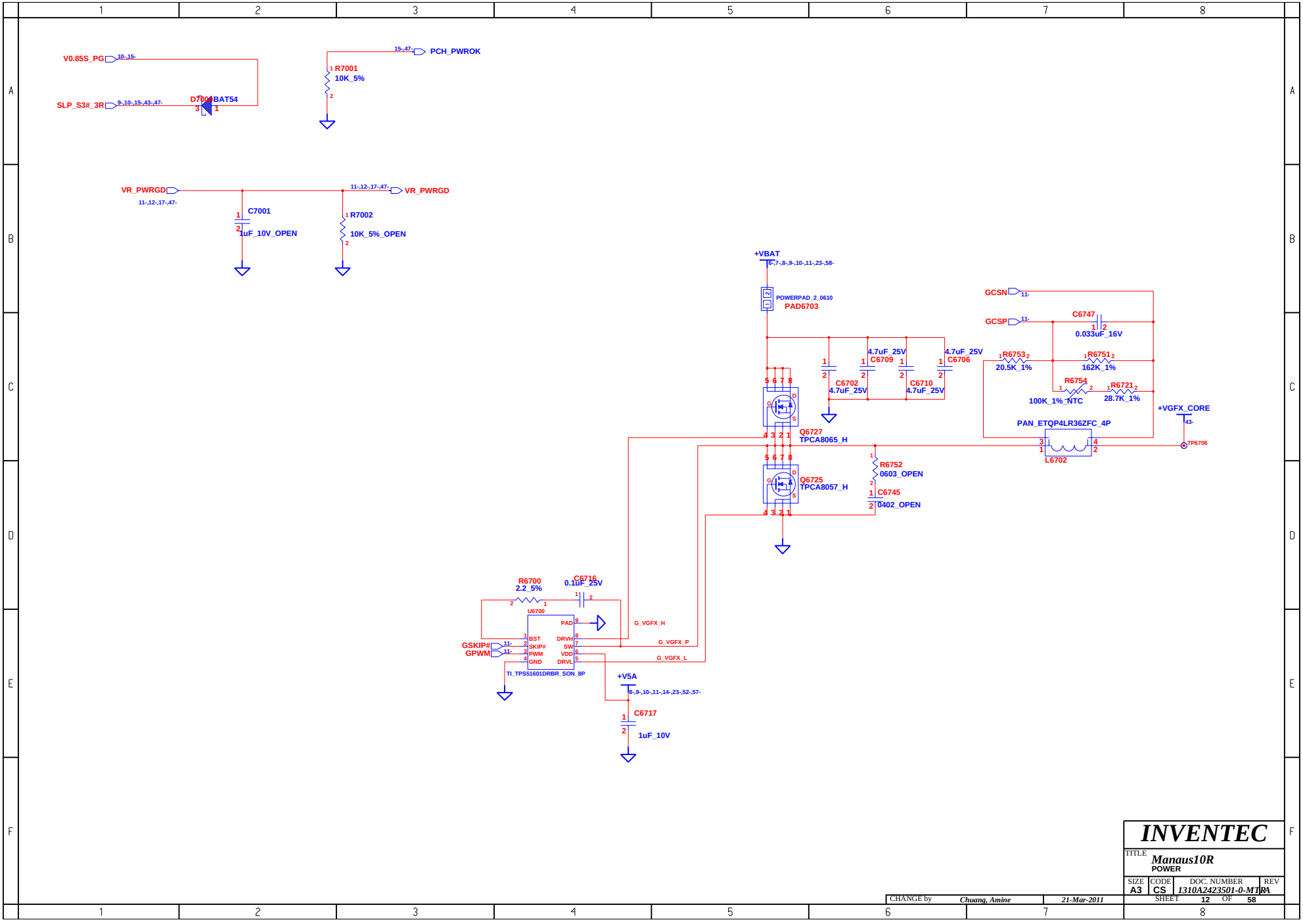

CHANGE by	Chuang, Amine	21-Mar-2011	

INVENTEC

TITLE *Manaus10R*
POWER

SIZE	CODE	DOC. NUMBER	REV
A3	CS	1310A2423501-0-MT	RA

SHEET 12 OF 58

SKIP

CHANGE by	Chuang, Amine	21-Mar-2011	

INVENTEC

TITLE *Manaus10R*

SIZE	CODE	DOC. NUMBER	REV
A3	CS	1310A2423501-0-MTRA	A

SHEET 13 OF 58

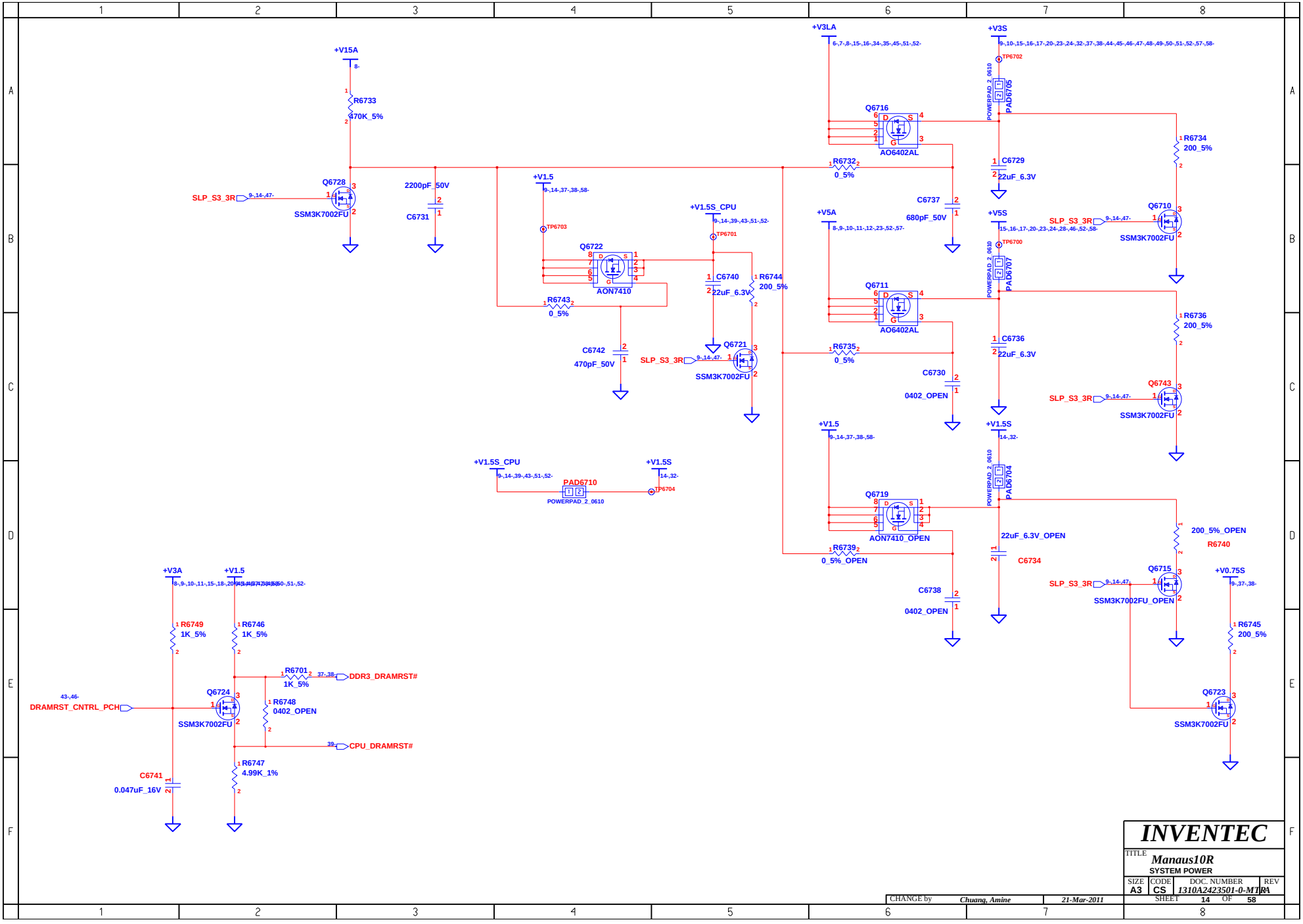

INVENTEC

TITLE
Manaus10R
SYSTEM POWER

SIZE	CODE	DOC. NUMBER	REV
A3	CS	1310A2423501-0-MTRA	A

SHEET 14 OF 58

CHANGE by	Chuang, Amine	21-Mar-2011

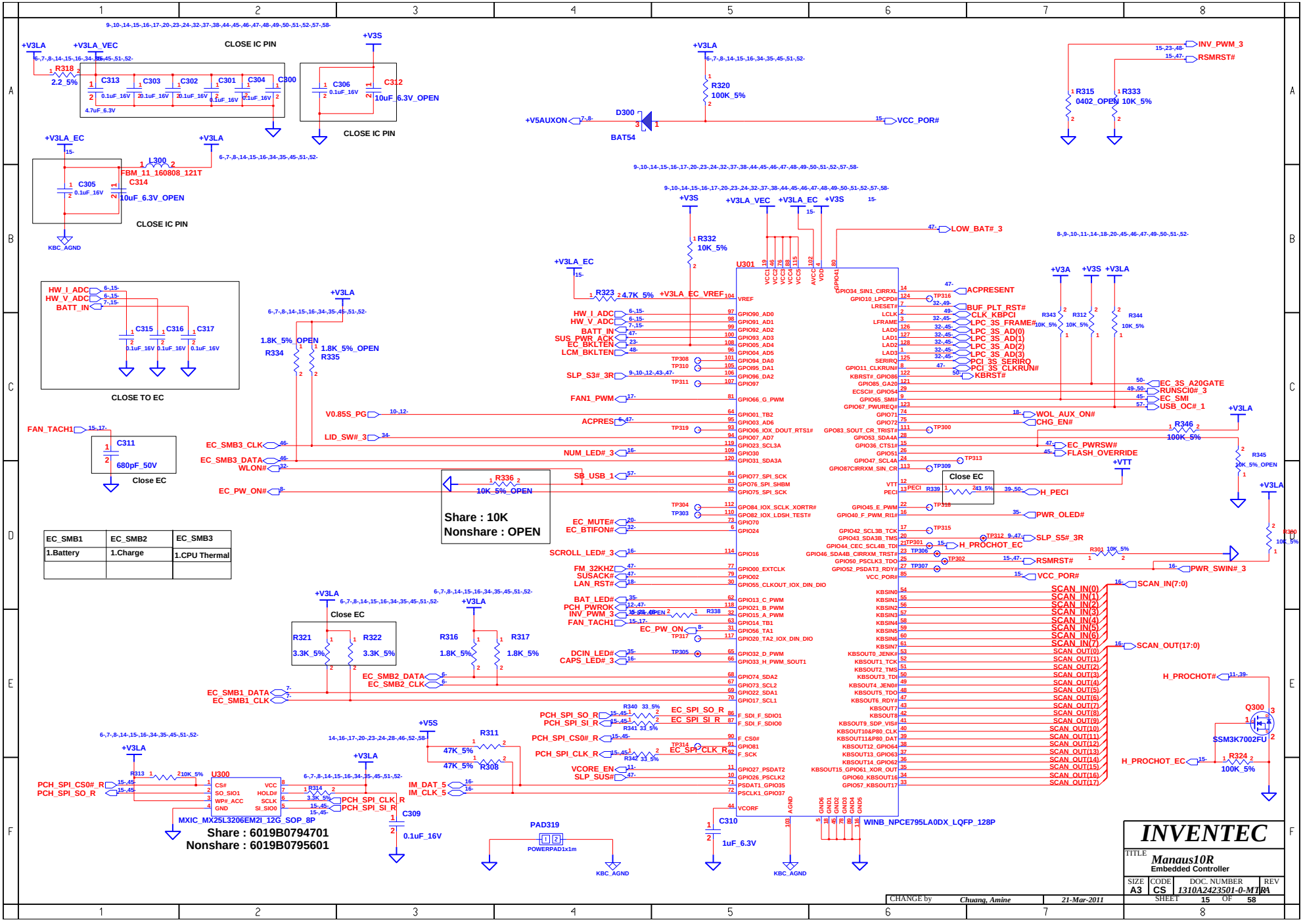

EC_SMB1	EC_SMB2	EC_SMB3
1.Battery	1.Charge	1.CPU Thermal

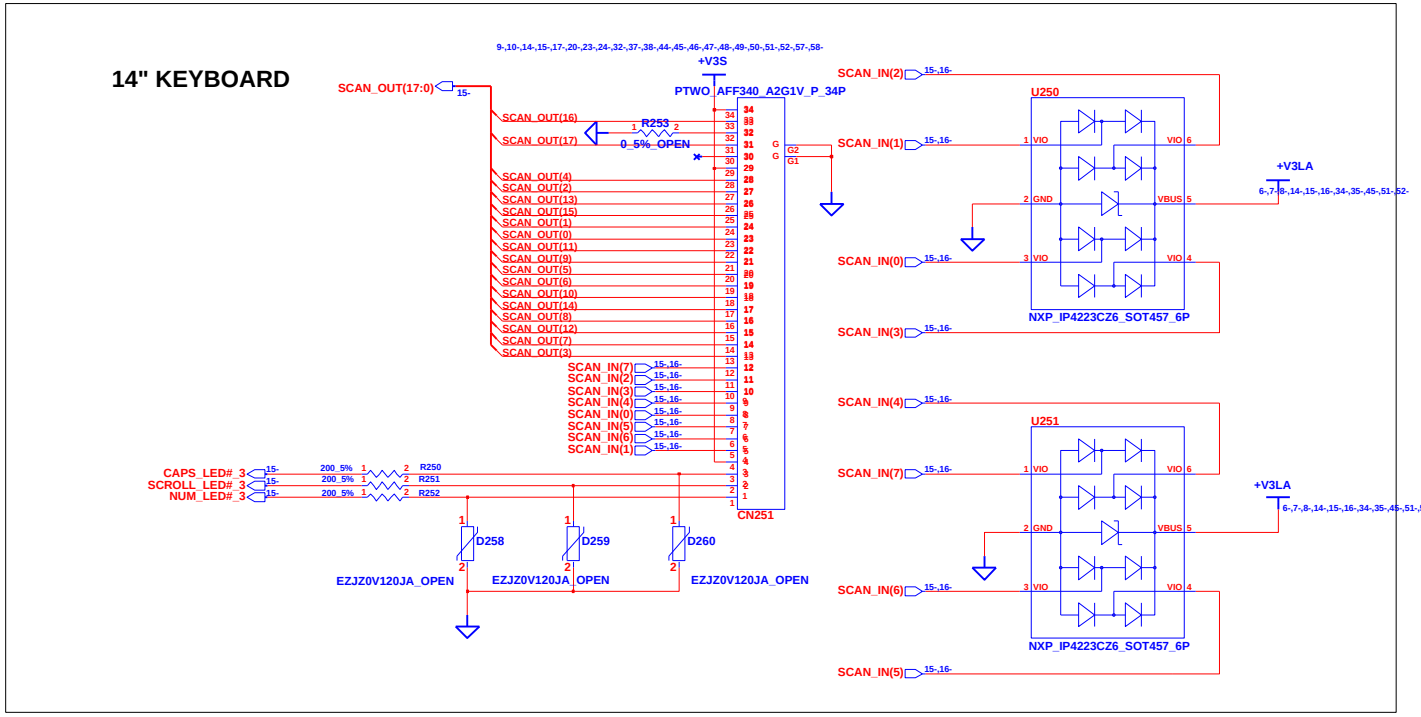

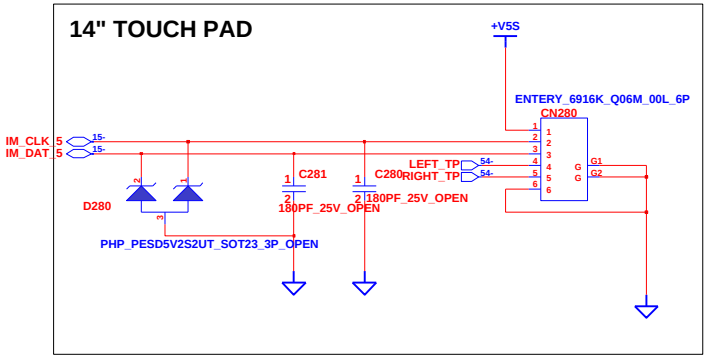

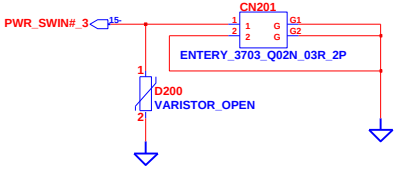

CHANGE by	Chuang, Amine	21-Mar-2011	

INVENTEC

TITLE *Manaus10R*
K/B TP/B CONN

SIZE	CODE	DOC. NUMBER	REV
A3	CS	1310A2423501-0-MTRA	A

SHEET 16 OF 58

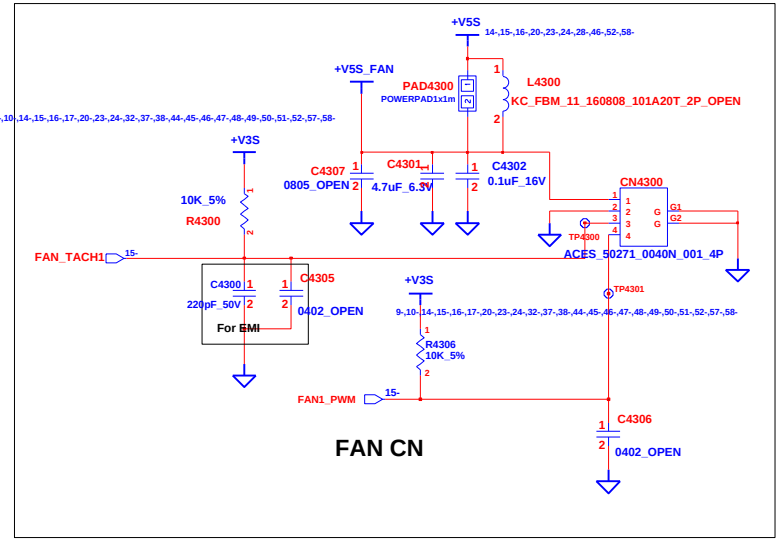

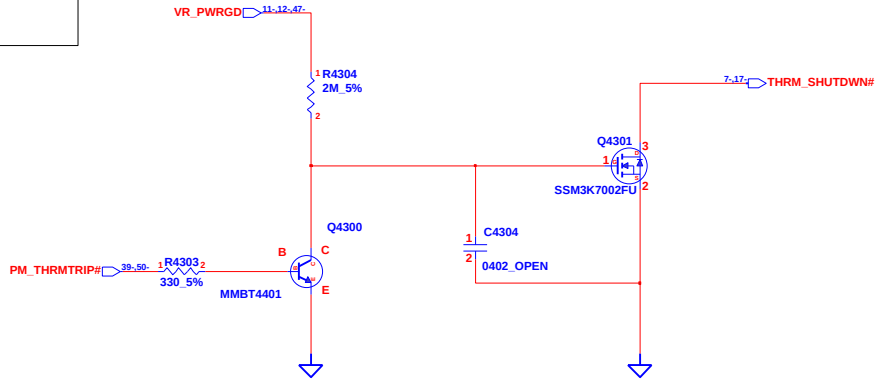

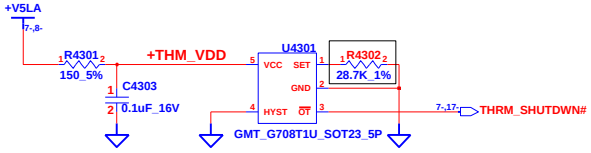

GM Thermal shoutdown at 80.9°C +/-3°C from 60°C to 100°C

RSET=0.0012*T^2- 0.9308*T+96.147

Hysteresis is 30C

INVENTEC			
TITLE Manaus10R FAN & THERMAL			
SIZE A3	CODE CS	DOC. NUMBER 1310A2423501-0-MTRA	REV A
CHANGE by Chuang, Amine	21-Mar-2011	SHEET 17 OF 58	

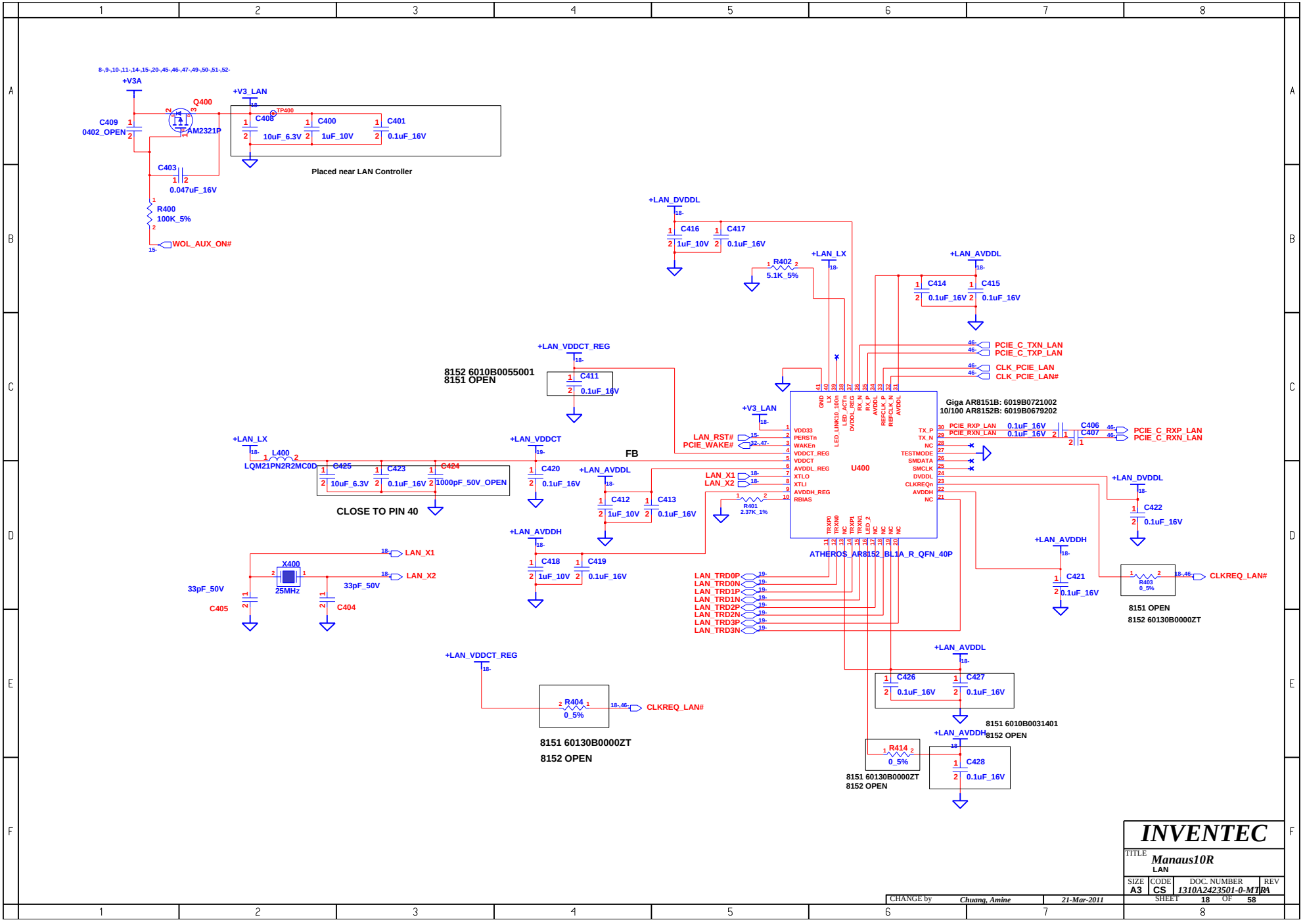
8-,9-,10-,11-,14-,15-,20-,45-,46-,47-,49-,50-,51-,52-
+V3A
Q400
AM2321P
C409
0402_OPEN
+V3_LAN
TP400
C408
10uF_6.3V
C400
1uF_10V
C401
0.1uF_16V
Placed near LAN Controller
C403
0.047uF_16V
R400
100K_5%
WOL_AUX_ON#
+LAN_DVDDL
C416
1uF_10V
C417
0.1uF_16V
+LAN_LX
R402
5.1K_5%
+LAN_AVDDL
C414
0.1uF_16V
C415
0.1uF_16V
+LAN_VDDCT_REG
8152 6010B0055001
8151 OPEN
C411
0.1uF_16V
PCIE_C_TXN_LAN
PCIE_C_TXP_LAN
CLK_PCIE_LAN
CLK_PCIE_LAN#
Giga AR8151B: 6019B0721002
10/100 AR8152B: 6019B0679202
+V3_LAN
LAN_RST#
PCIE_WAKE#
PCIE_RXP_LAN
PCIE_RXN_LAN
C406
C407
PCIE_C_RXP_LAN
PCIE_C_RXN_LAN
+LAN_LX
L400
LQM21PN2R2MC0D
C425
10uF_6.3V
C423
0.1uF_16V
C424
1000pF_50V_OPEN
CLOSE TO PIN 40
+LAN_VDDCT
C420
0.1uF_16V
FB
+LAN_AVDDL
C412
1uF_10V
C413
0.1uF_16V
LAN_X1
LAN_X2
R401
2.37K_1%
U400
+LAN_DVDDL
C422
0.1uF_16V
+LAN_AVDDH
C418
1uF_10V
C419
0.1uF_16V
ATHEROS_AR8152_BL1A_R_QFN_40P
+LAN_AVDDH
C421
0.1uF_16V
R403
0_5%
CLKREQ_LAN#
8151 OPEN
8152 60130B0000ZT
X400
25MHz
33pF_50V
C405
33pF_50V
C404
LAN_TRD0P
LAN_TRD0N
LAN_TRD1P
LAN_TRD1N
LAN_TRD2P
LAN_TRD2N
LAN_TRD3P
LAN_TRD3N
+LAN_VDDCT_REG
R404
0_5%
CLKREQ_LAN#
8151 60130B0000ZT
8152 OPEN
+LAN_AVDDL
C426
0.1uF_16V
C427
0.1uF_16V
8151 6010B0031401
8152 OPEN
+LAN_AVDDH
R414
0_5%
8151 60130B0000ZT
8152 OPEN
C428
0.1uF_16V
INVENTEC
TITLE
Manaus10R
LAN
SIZE A3
CODE CS
DOC. NUMBER 1310A2423501-0-MTRA
REV A
SHEET 18 OF 58
CHANGE by Chuang, Amine
21-Mar-2011

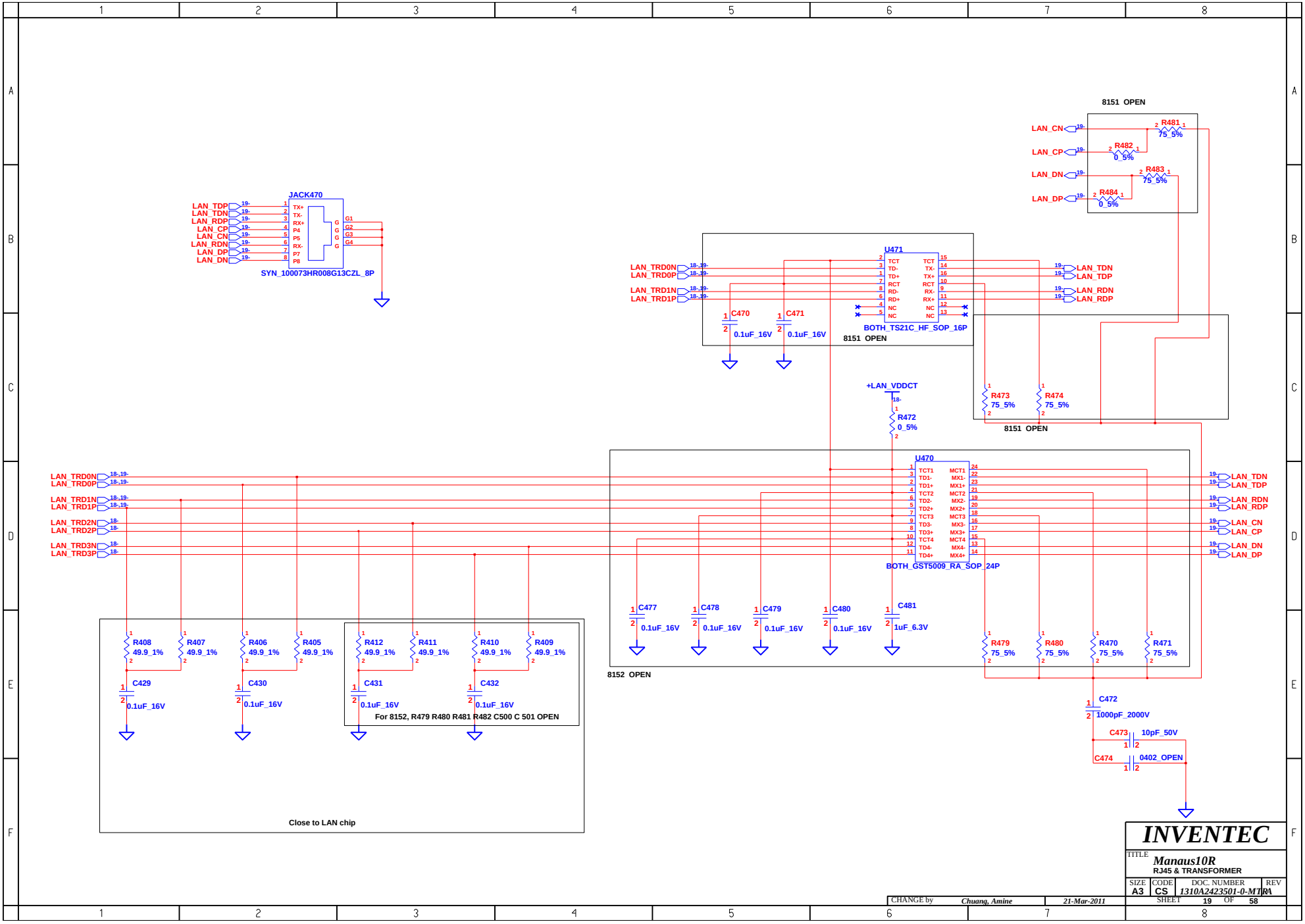
JACK470
SYN_100073HR008G13CZL_8P
LAN_TDP
LAN_TDN
LAN_RDP
LAN_CP
LAN_CN
LAN_RDN
LAN_DP
LAN_DN
8151 OPEN
R481 75_5%
R482 0_5%
R483 75_5%
R484 0_5%
U471
BOTH_TS21C_HF_SOP_16P
LAN_TRD0N
LAN_TRD0P
LAN_TRD1N
LAN_TRD1P
C470 0.1uF_16V
C471 0.1uF_16V
R473 75_5%
R474 75_5%
+LAN_VDDCT
R472 0_5%
U470
BOTH_GST5009_RA_SOP_24P
LAN_TRD2N
LAN_TRD2P
LAN_TRD3N
LAN_TRD3P
C477 0.1uF_16V
C478 0.1uF_16V
C479 0.1uF_16V
C480 0.1uF_16V
C481 1uF_6.3V
R479 75_5%
R480 75_5%
R470 75_5%
R471 75_5%
8152 OPEN
R408 49.9_1%
R407 49.9_1%
R406 49.9_1%
R405 49.9_1%
R412 49.9_1%
R411 49.9_1%
R410 49.9_1%
R409 49.9_1%
C429 0.1uF_16V
C430 0.1uF_16V
C431 0.1uF_16V
C432 0.1uF_16V
For 8152, R479 R480 R481 R482 C500 C 501 OPEN
Close to LAN chip
C472 1000pF_2000V
C473 10pF_50V
C474 0402_OPEN
INVENTEC
TITLE
Manaus10R
RJ45 & TRANSFORMER
SIZE A3
CODE CS
DOC. NUMBER 1310A2423501-0-MTRA
REV A
SHEET 19 OF 58
CHANGE by Chuang, Amine 21-Mar-2011

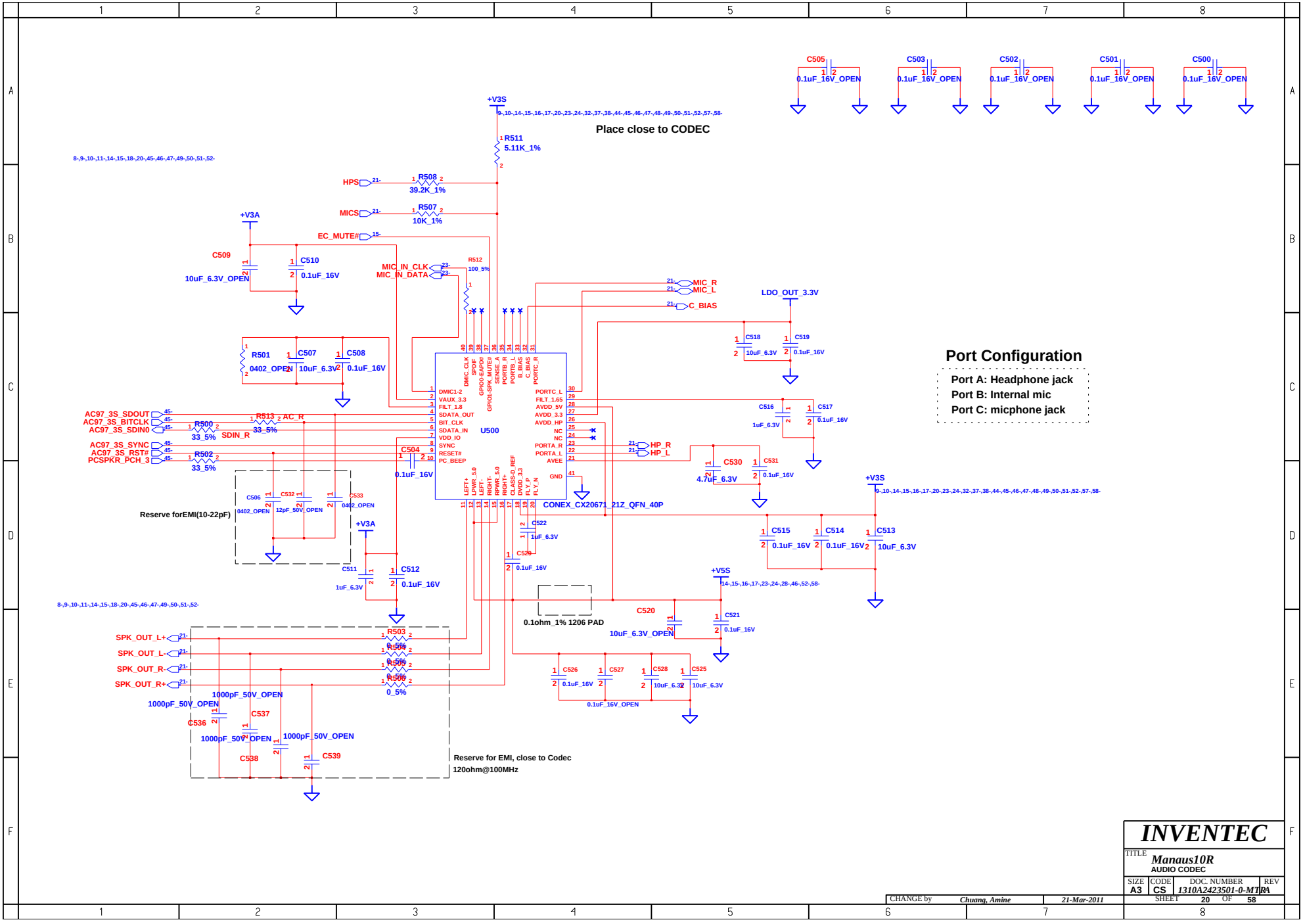

Port Configuration

Port A: Headphone jack
Port B: Internal mic
Port C: micphone jack

CHANGE by	Chuang, Amine	21-Mar-2011	

INVENTEC

TITLE: *Manaus10R*
AUDIO CODEC

SIZE	CODE	DOC. NUMBER	REV
A3	CS	1310A2423501-0-MTRA	A

SHEET 20 OF 58

INTERNAL SPEAKERS

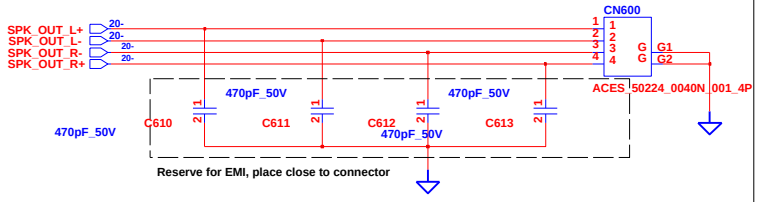

AUDIO JACKS

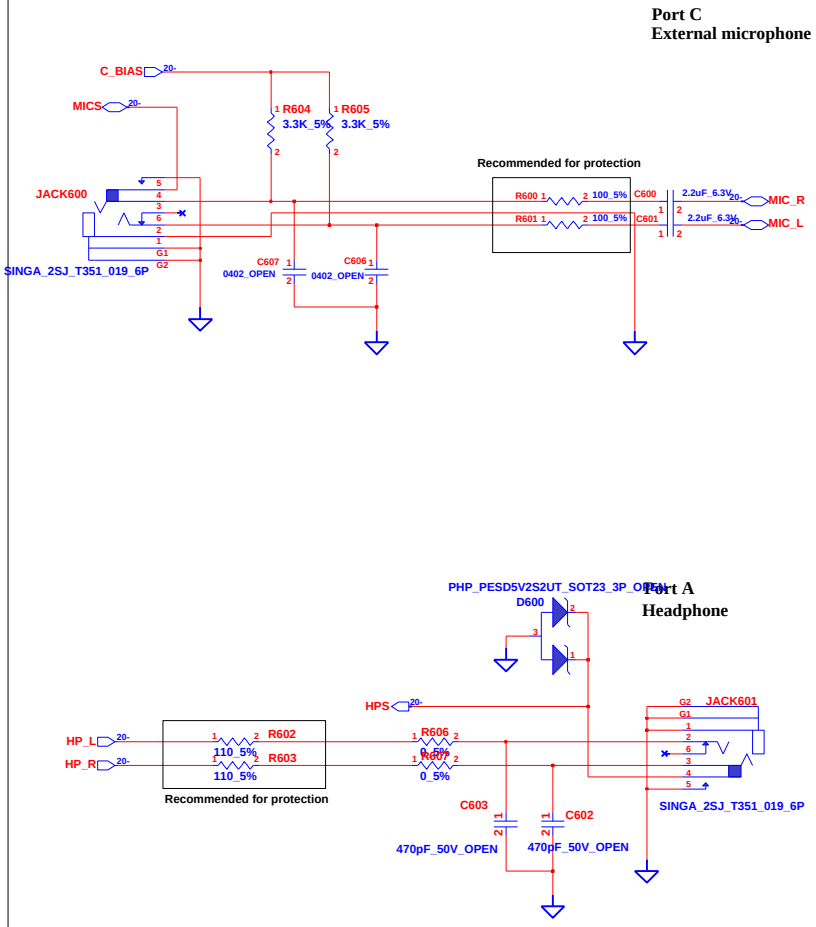

CHANGE by	Chuang, Amine	21-Mar-2011	

INVENTEC

TITLE *Manaus10R*
AUDIO JACK & INTERNAL SPEAKER

SIZE	CODE	DOC. NUMBER	REV
A3	CS	1310A2423501-0-MTRA	A

SHEET 21 OF 58

SKIP

CHANGE by	Chuang, Amine	21-Mar-2011	

INVENTEC

TITLE *Manaus10R*

SIZE	CODE	DOC. NUMBER	REV
A3	CS	1310A2423501-0-MTRA	A

SHEET 22 OF 58

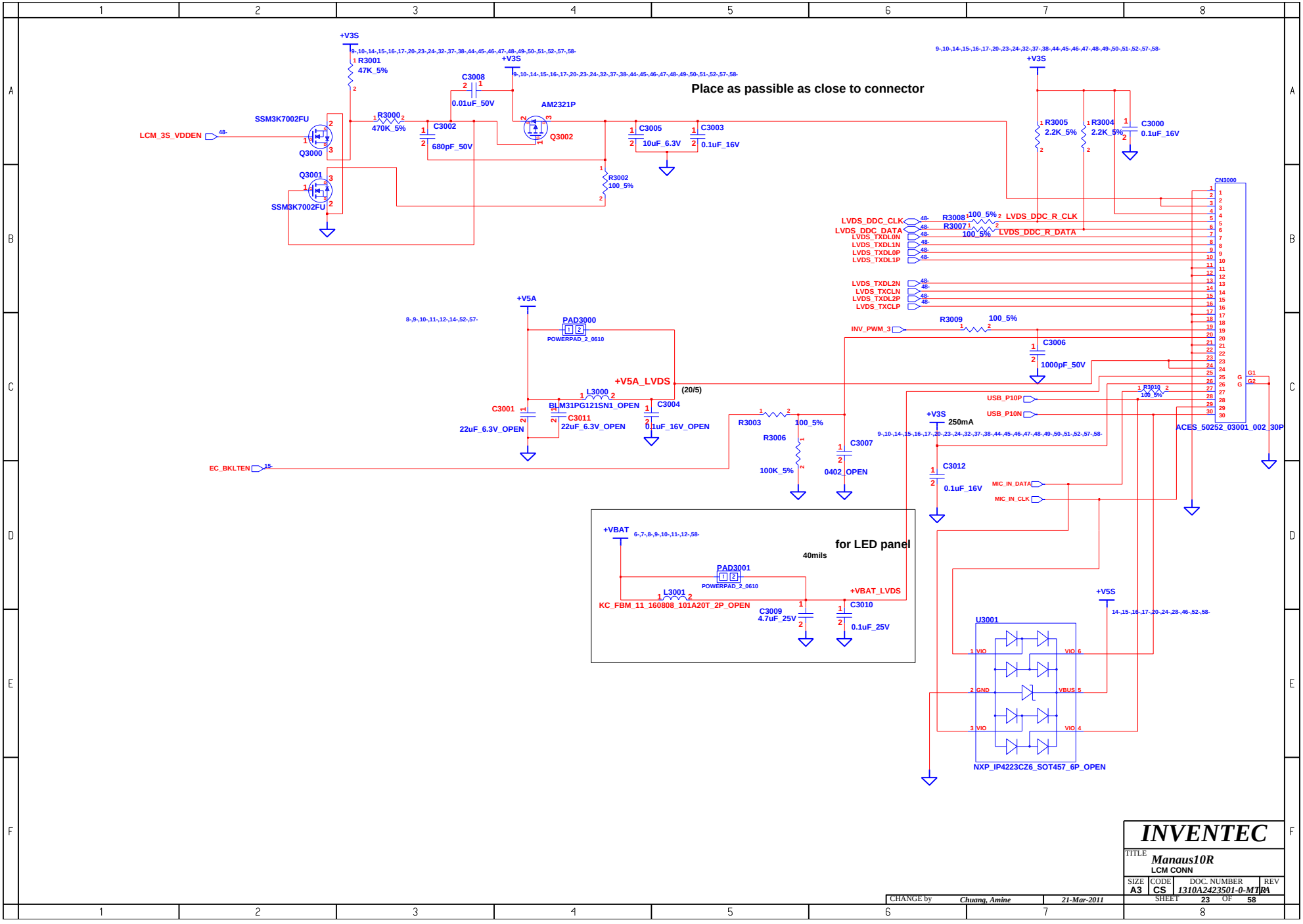

INVENTEC			
TITLE Manaus10R LCM CONN			
SIZE A3	CODE CS	DOC. NUMBER 1310A2423501-0-MTRA	REV A
CHANGE by Chuang, Amine	21-Mar-2011	SHEET 23 OF 58	

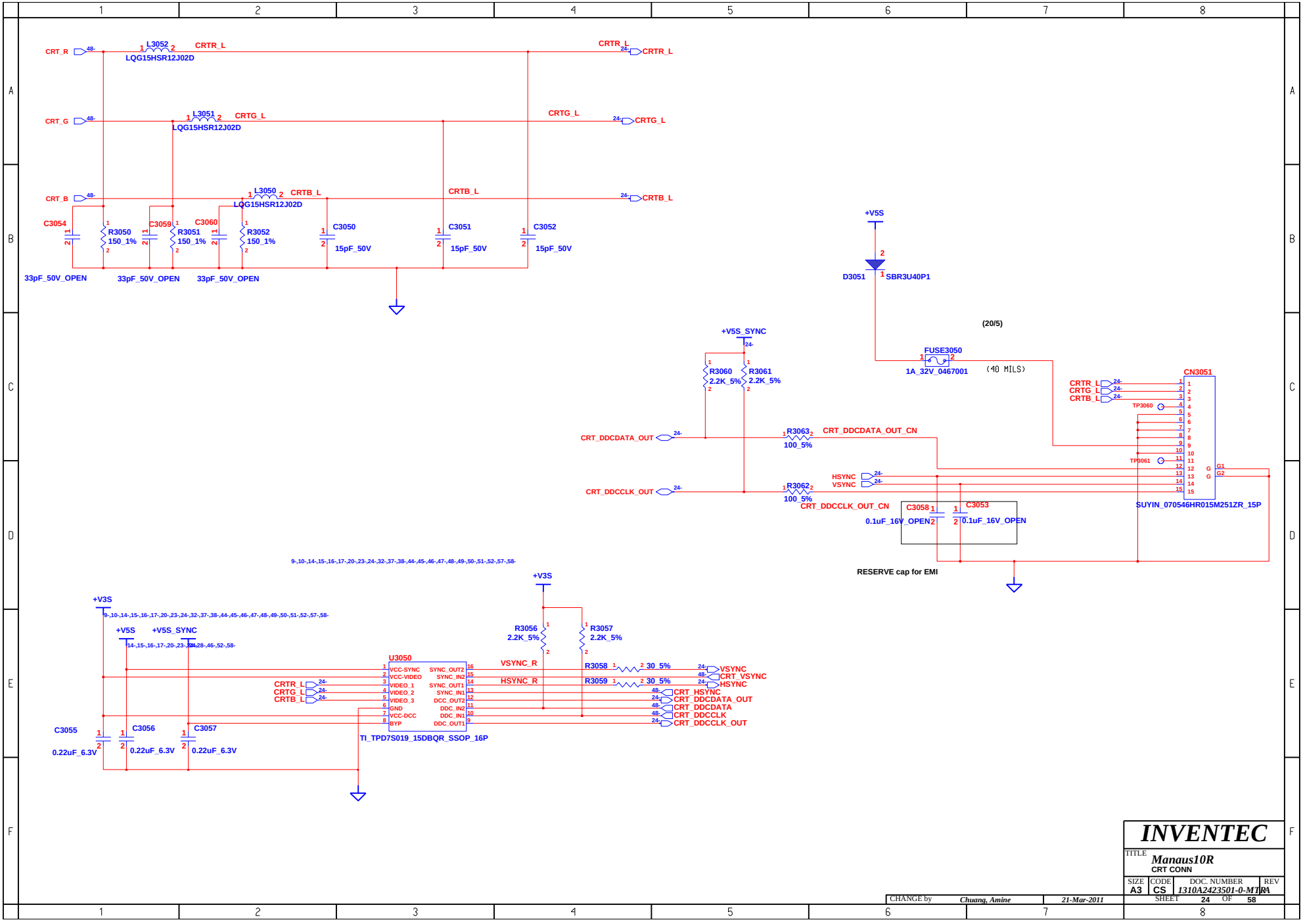

CHANGE by	Chuang, Amine	21-Mar-2011	

INVENTEC

TITLE: *Manaus10R*
CRT CONN

SIZE	CODE	DOC. NUMBER	REV
A3	CS	1310A2423501-0-MT	A

SHEET 24 OF 58

SKIP

CHANGE by	Chuang, Amine	21-Mar-2011		

INVENTEC

TITLE *Manaus10R*

SIZE	CODE	DOC. NUMBER	REV
A3	CS	1310A2423501-0-MTRA	A

SHEET 25 OF 58

SKIP

CHANGE by	Chuang, Amine	21-Mar-2011	

INVENTEC

TITLE *Manaus10R*

SIZE	CODE	DOC. NUMBER	REV
A3	CS	1310A2423501-0-MTRA	A

SHEET 26 OF 58

SKIP

CHANGE by	Chuang, Amine	21-Mar-2011		

INVENTEC

TITLE *Manaus10R*

SIZE	CODE	DOC. NUMBER	REV
A3	CS	1310A2423501-0-MTRA	A

SHEET 27 OF 58

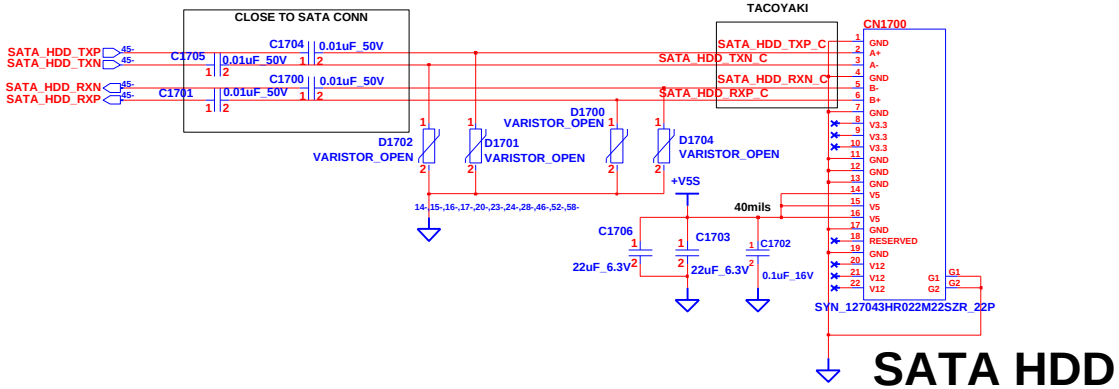

SATA HDD

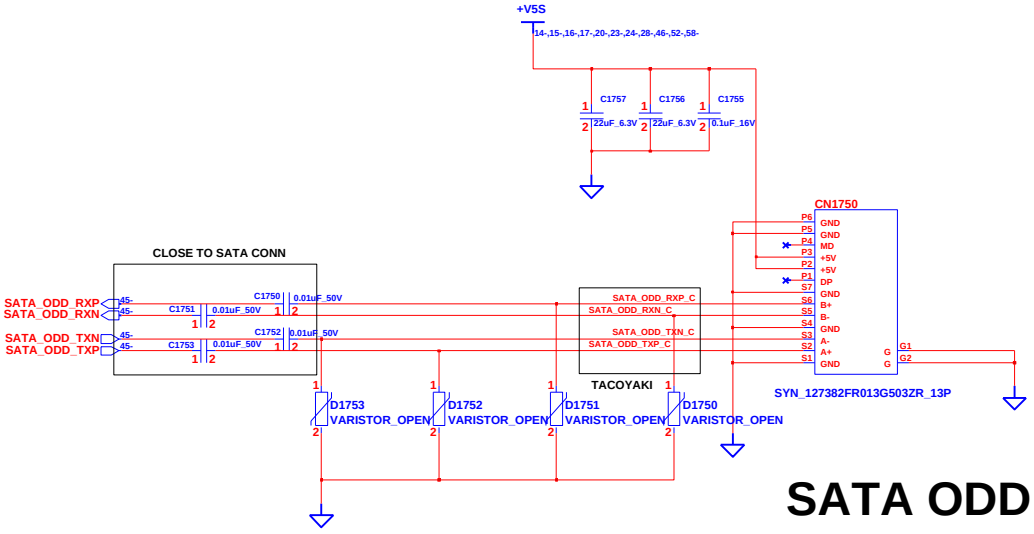

SATA ODD

INVENTEC			
TITLE Manaus10R SATA HDD & ODD			
SIZE A3	CODE CS	DOC. NUMBER 1310A2423501-0-MT	REV A
CHANGE by Chuang, Amine	21-Mar-2011	SHEET 28 OF 58	

SKIP

CHANGE by	Chuang, Amine	21-Mar-2011	

INVENTEC

TITLE *Manaus10R*

SIZE	CODE	DOC. NUMBER	REV
A3	CS	1310A2423501-0-MTRA	A

SHEET 29 OF 58

SKIP

CHANGE by	Chuang, Amine	21-Mar-2011	

INVENTEC

TITLE *Manaus10R*

SIZE	CODE	DOC. NUMBER	REV
A3	CS	1310A2423501-0-MTRA	A

SHEET 30 OF 58

SKIP

CHANGE by	Chuang, Amine	21-Mar-2011	

INVENTEC

TITLE *Manaus10R*

SIZE	CODE	DOC. NUMBER	REV
A3	CS	1310A2423501-0-MTRA	A

SHEET 31 OF 58

Wireless & Debug card

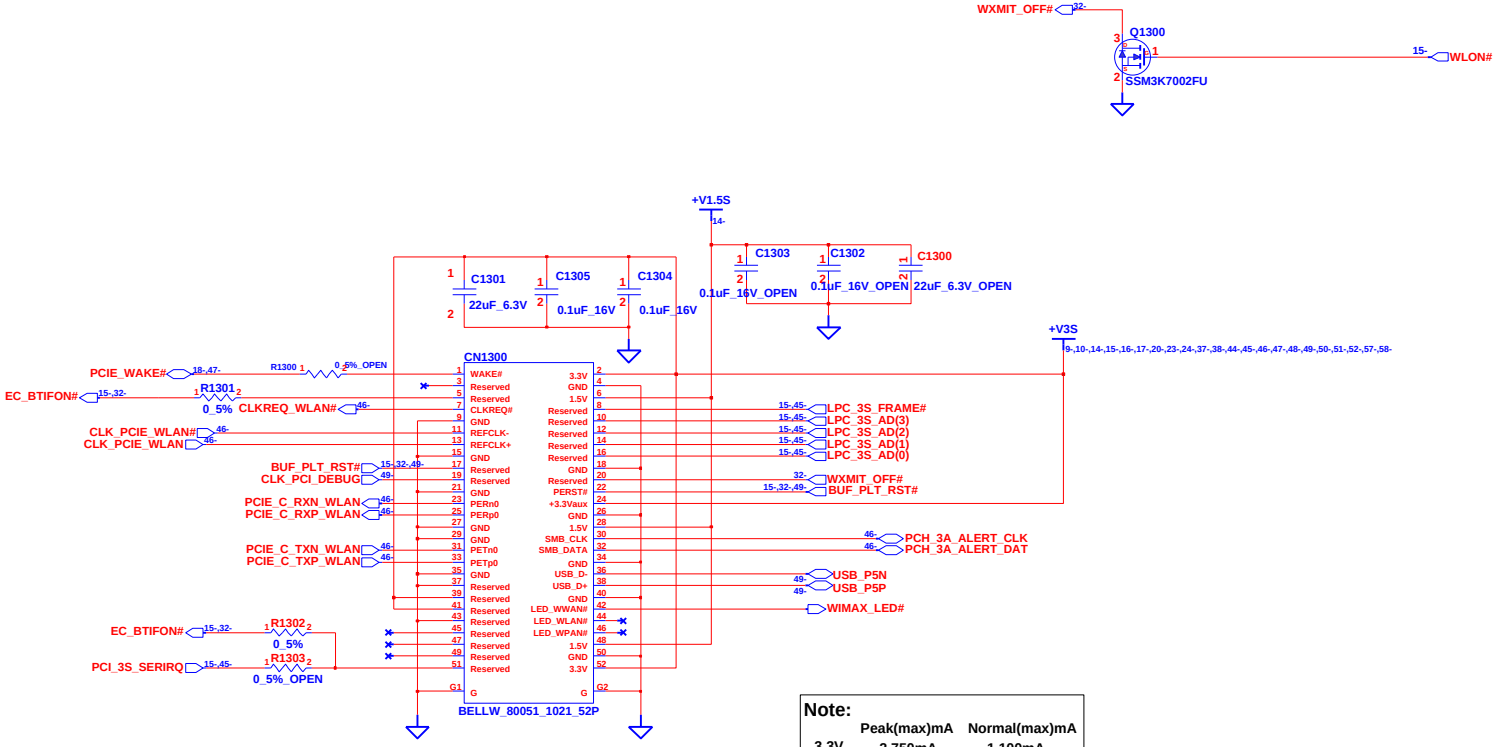

Note:

	Peak(max)mA	Normal(max)mA
3.3V	2,750mA	1,100mA

MINI CARD 1

INVENTEC			
TITLE: Manaus10R WLAN/DEBUG CARD			
SIZE A3	CODE CS	DOC. NUMBER 1310A2423501-0-MTRA	REV A
CHANGE by Chuang, Amine	21-Mar-2011	SHEET 32 OF 58	

SKIP

CHANGE by	Chuang, Amine	21-Mar-2011	

INVENTEC

TITLE *Manaus10R*

SIZE	CODE	DOC. NUMBER	REV
A3	CS	1310A2423501-0-MTRA	A

SHEET 33 OF 58

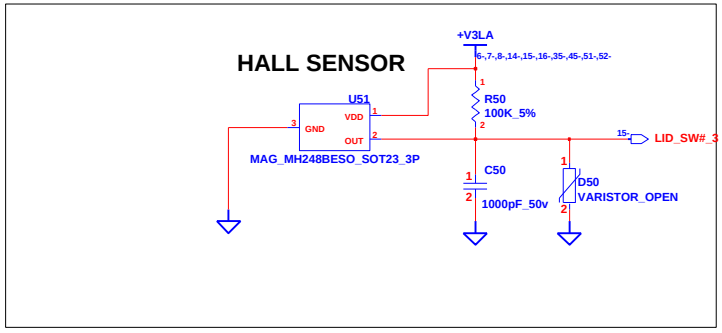

CHANGE by	Chuang, Amine	21-Mar-2011

INVENTEC

TITLE *Manaus10R*
HALL SENSOR

SIZE	CODE	DOC. NUMBER	REV
A3	CS	1310A2423501-0-MT[illegible]	A

SHEET 34 OF 58

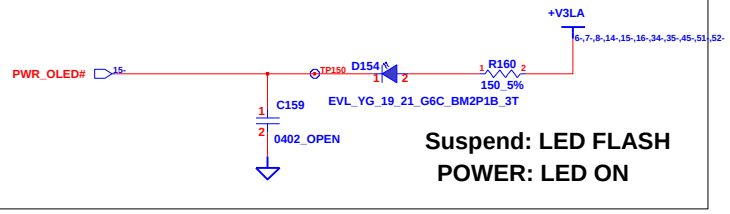

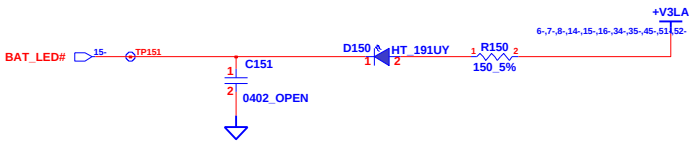

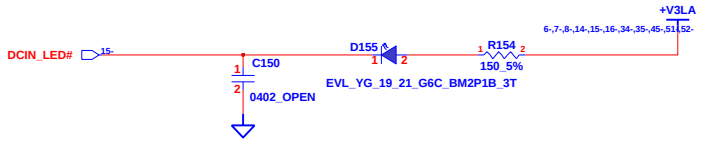

CHANGE by	Chuang, Amine	21-Mar-2011	

INVENTEC

TITLE *Manaus10R*
LED

SIZE	CODE	DOC. NUMBER	REV
A3	CS	1310A2423501-0-MT	A

SHEET 35 OF 58

SKIP

CHANGE by	Chuang, Amine	21-Mar-2011	

INVENTEC

TITLE *Manaus10R*

SIZE	CODE	DOC. NUMBER	REV
A3	CS	1310A2423501-0-MTRA	A

SHEET 36 OF 58

CHA

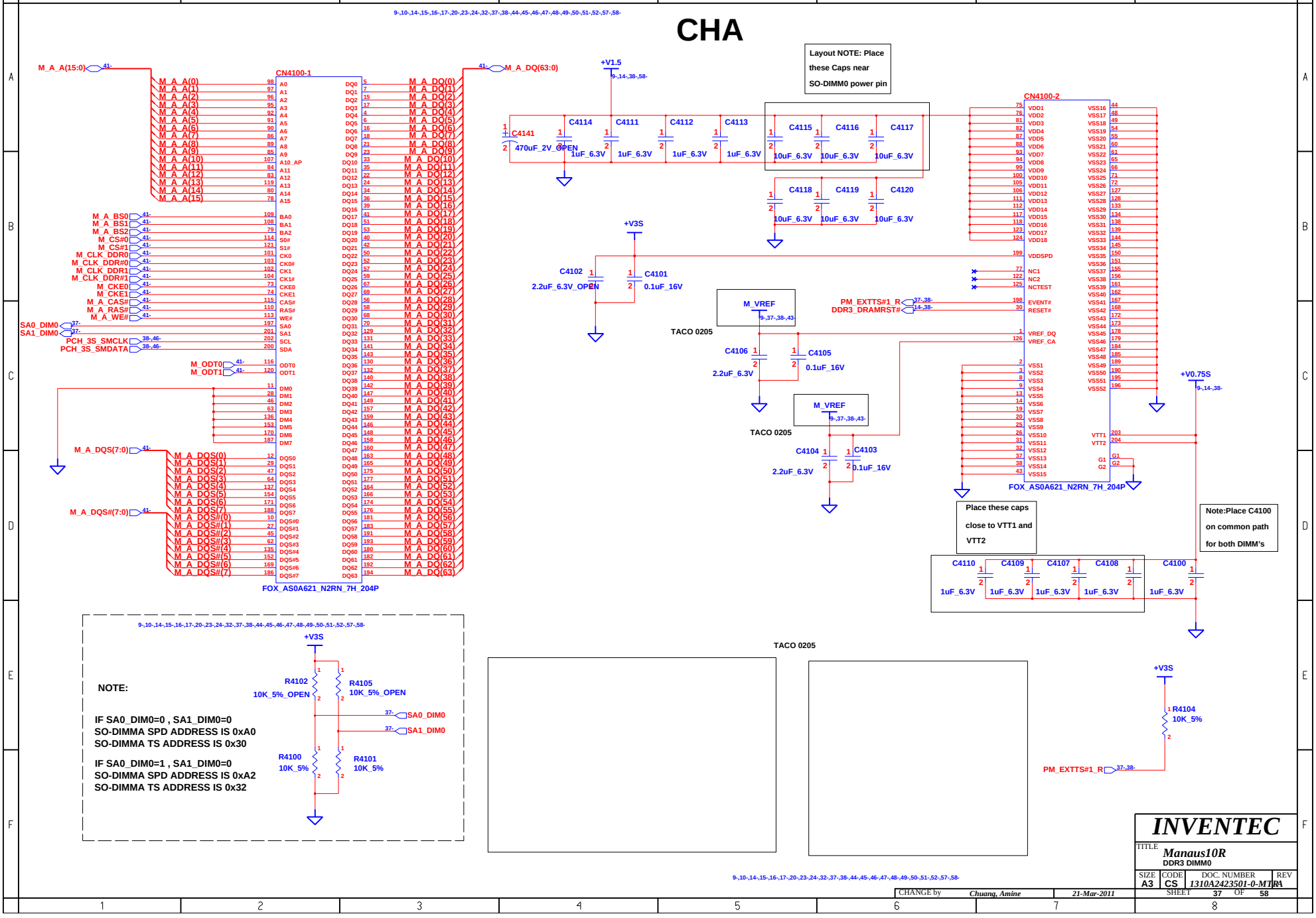
9-,10-,14-,15-,16-,17-,20-,23-,24-,32-,37-,38-,44-,45-,46-,47-,48-,49-,50-,51-,52-,57-,58-
M_A_A(15:0)
M_A_DQ(63:0)
CN4100-1
FOX_AS0A621_N2RN_7H_204P
M_A_BS0
M_A_BS1
M_A_BS2
M_CS#0
M_CS#1
M_CLK_DDR0
M_CLK_DDR#0
M_CLK_DDR1
M_CLK_DDR#1
M_CKE0
M_CKE1
M_A_CAS#
M_A_RAS#
M_A_WE#
SA0_DIM0
SA1_DIM0
PCH_3S_SMCLK
PCH_3S_SMDATA
M_ODT0
M_ODT1
M_A_DQS(7:0)
M_A_DQS#(7:0)
+V1.5
C4141
470uF_2V_OPEN
C4114
C4111
C4112
C4113
1uF_6.3V
C4115
C4116
C4117
10uF_6.3V
C4118
C4119
C4120
Layout NOTE: Place these Caps near SO-DIMM0 power pin
+V3S
C4102
2.2uF_6.3V_OPEN
C4101
0.1uF_16V
M_VREF
TACO 0205
C4106
2.2uF_6.3V
C4105
0.1uF_16V
C4104
2.2uF_6.3V
C4103
0.1uF_16V
CN4100-2
FOX_AS0A621_N2RN_7H_204P
PM_EXTTS#1_R
DDR3_DRAMRST#
+V0.75S
Place these caps close to VTT1 and VTT2
Note:Place C4100 on common path for both DIMM's
C4110
C4109
C4107
C4108
C4100
NOTE:
IF SA0_DIM0=0 , SA1_DIM0=0
SO-DIMMA SPD ADDRESS IS 0xA0
SO-DIMMA TS ADDRESS IS 0x30
IF SA0_DIM0=1 , SA1_DIM0=0
SO-DIMMA SPD ADDRESS IS 0xA2
SO-DIMMA TS ADDRESS IS 0x32
R4102
10K_5%_OPEN
R4105
10K_5%_OPEN
R4100
10K_5%
R4101
10K_5%
SA0_DIM0
SA1_DIM0
R4104
10K_5%
PM_EXTTS#1_R
INVENTEC
TITLE
Manaus10R
DDR3 DIMM0
SIZE A3
CODE CS
DOC. NUMBER 1310A2423501-0-MTRA
REV A
SHEET 37 OF 58
CHANGE by Chuang, Amine
21-Mar-2011

CHB

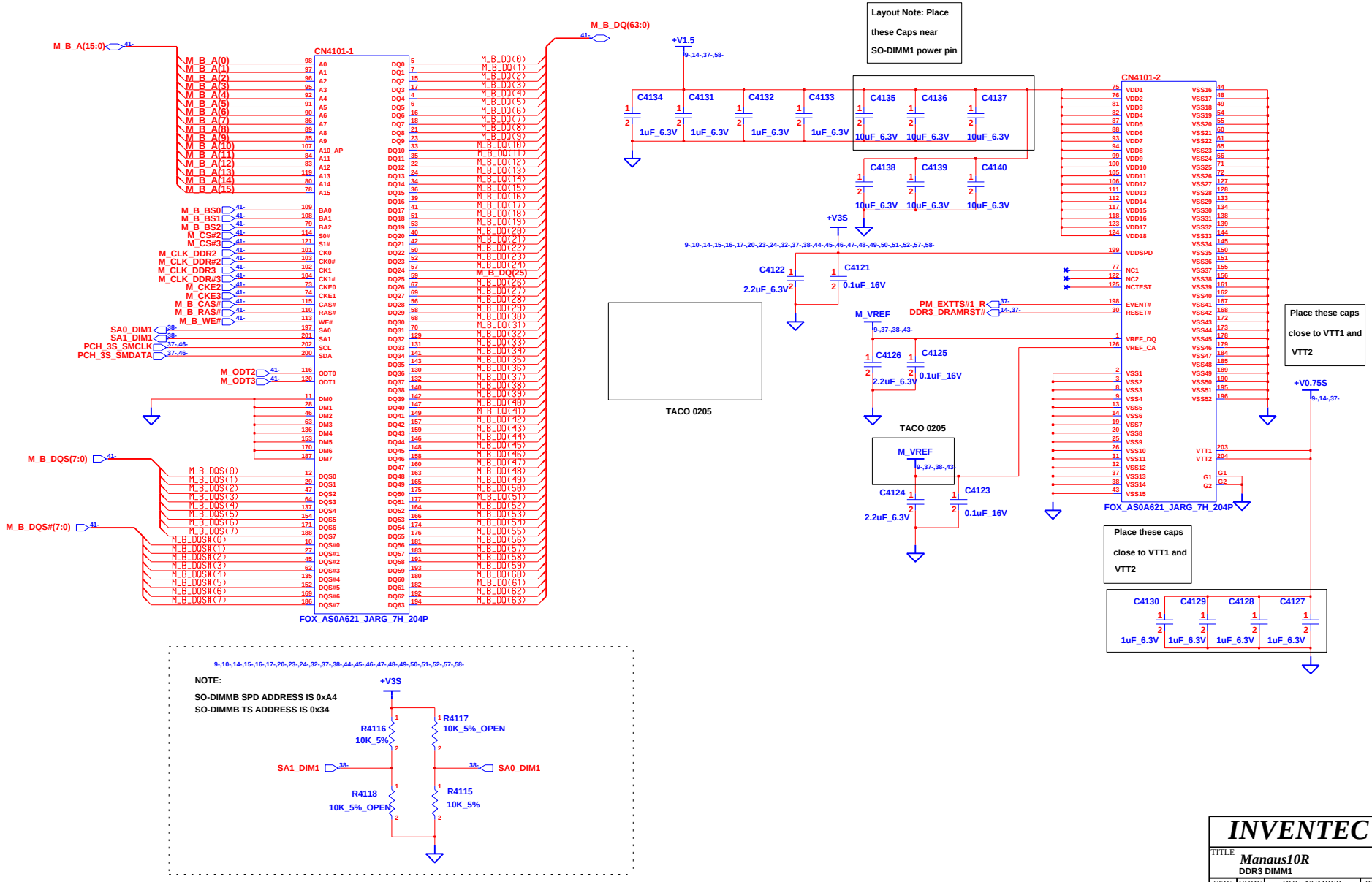

CHANGE by	Chuang, Amine	21-Mar-2011	

INVENTEC

TITLE: *Manaus10R*
DDR3 DIMM1

SIZE	CODE	DOC. NUMBER	REV
A3	CS	1310A2423501-0-MT	A

SHEET 38 OF 58

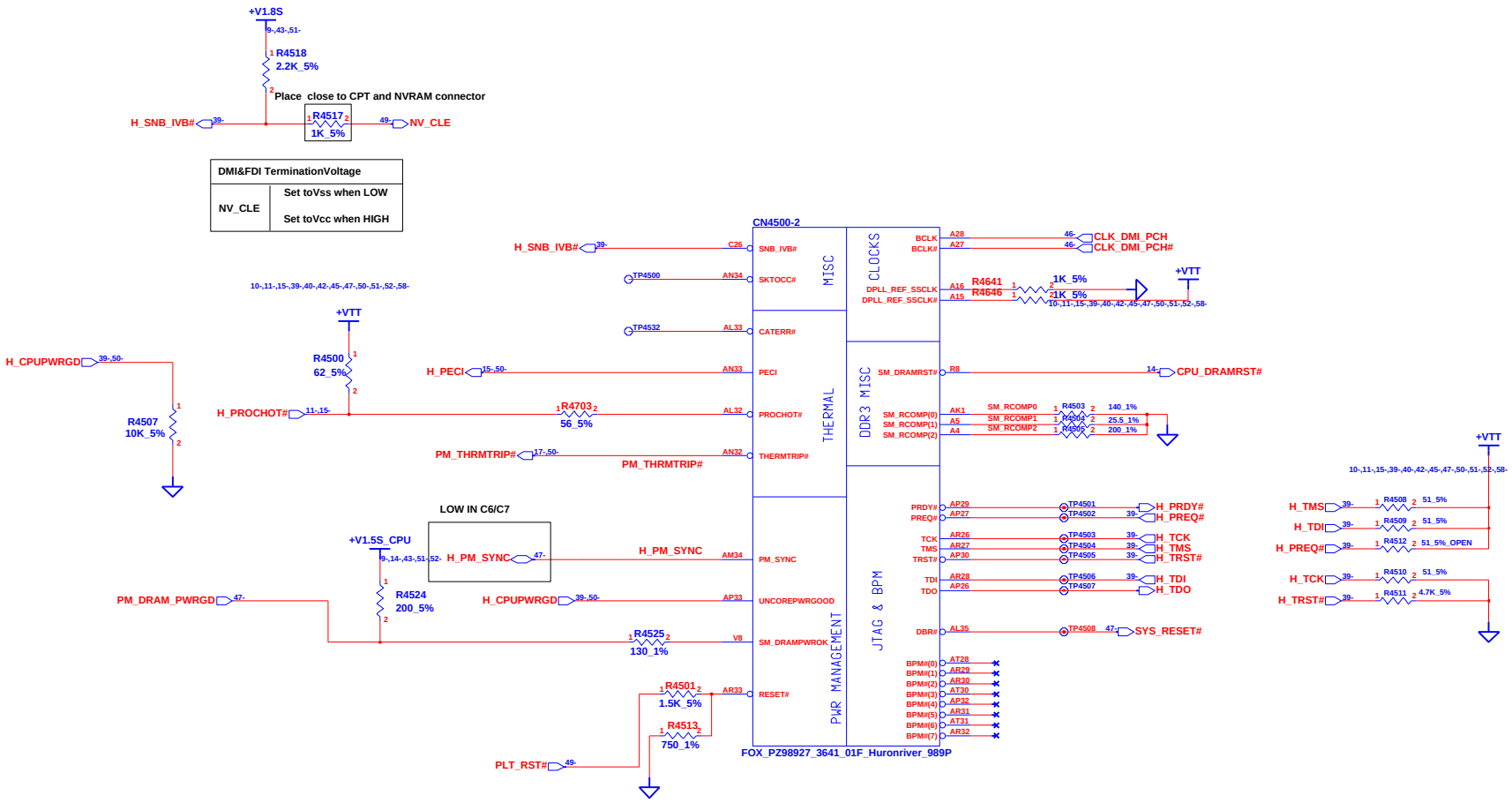

INVENTEC			
TITLE Manaus10R CPU1			
SIZE A3	CODE CS	DOC. NUMBER 1310A2423501-0-MT-RA	REV A
CHANGE by Chuang, Amine	21-Mar-2011	SHEET 39 OF 58	

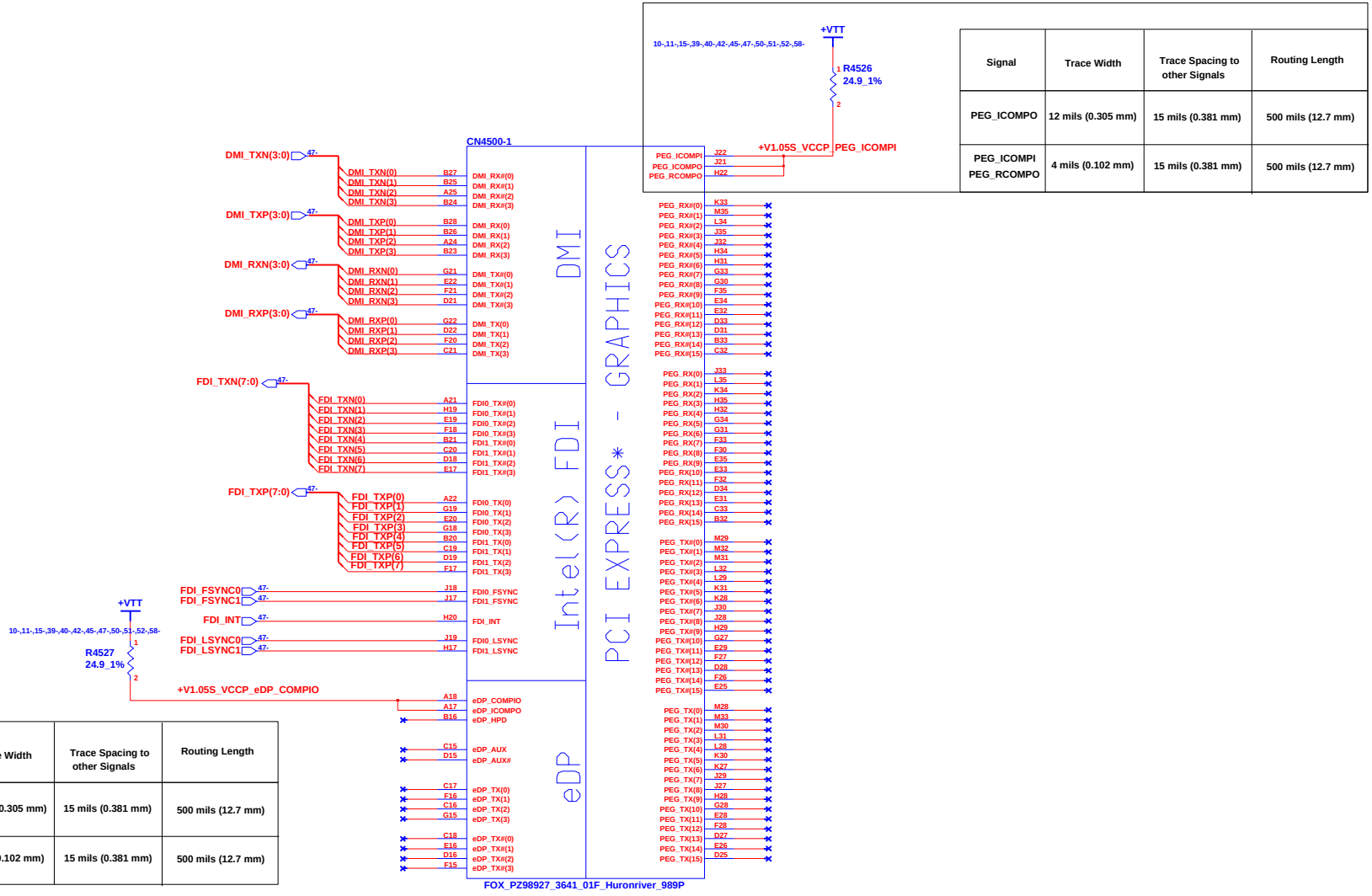

Signal	Trace Width	Trace Spacing to other Signals	Routing Length
DP_ICOMPO	12 mils (0.305 mm)	15 mils (0.381 mm)	500 mils (12.7 mm)
DP_COMPIO	4 mils (0.102 mm)	15 mils (0.381 mm)	500 mils (12.7 mm)

Signal	Trace Width	Trace Spacing to other Signals	Routing Length
PEG_ICOMPO	12 mils (0.305 mm)	15 mils (0.381 mm)	500 mils (12.7 mm)
PEG_ICOMPI PEG_RCOMPO	4 mils (0.102 mm)	15 mils (0.381 mm)	500 mils (12.7 mm)

CHANGE by	Chuang, Amine	21-Mar-2011

INVENTEC

TITLE: *Manaus10R*
CPU2

SIZE	CODE	DOC. NUMBER	REV
A3	CS	1310A2423501-0-MT	A

SHEET 40 OF 58

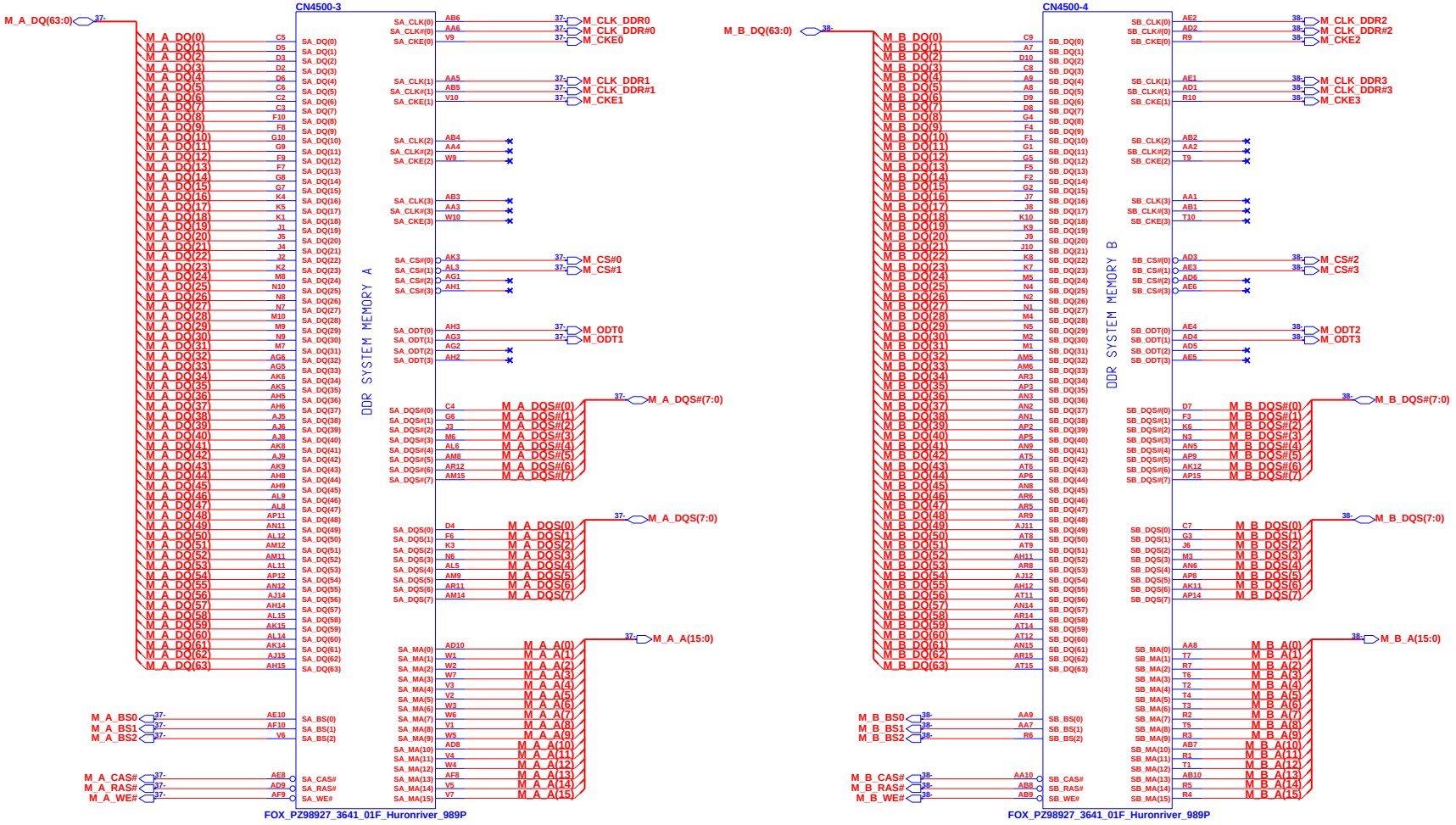

CHANGE by	Chuang, Amine	21-Mar-2011

INVENTEC

TITLE: *Manaus10R*
CPU3

SIZE	CODE	DOC. NUMBER	REV
A3	CS	1310A2423501-0-MT	A

SHEET 41 OF 58

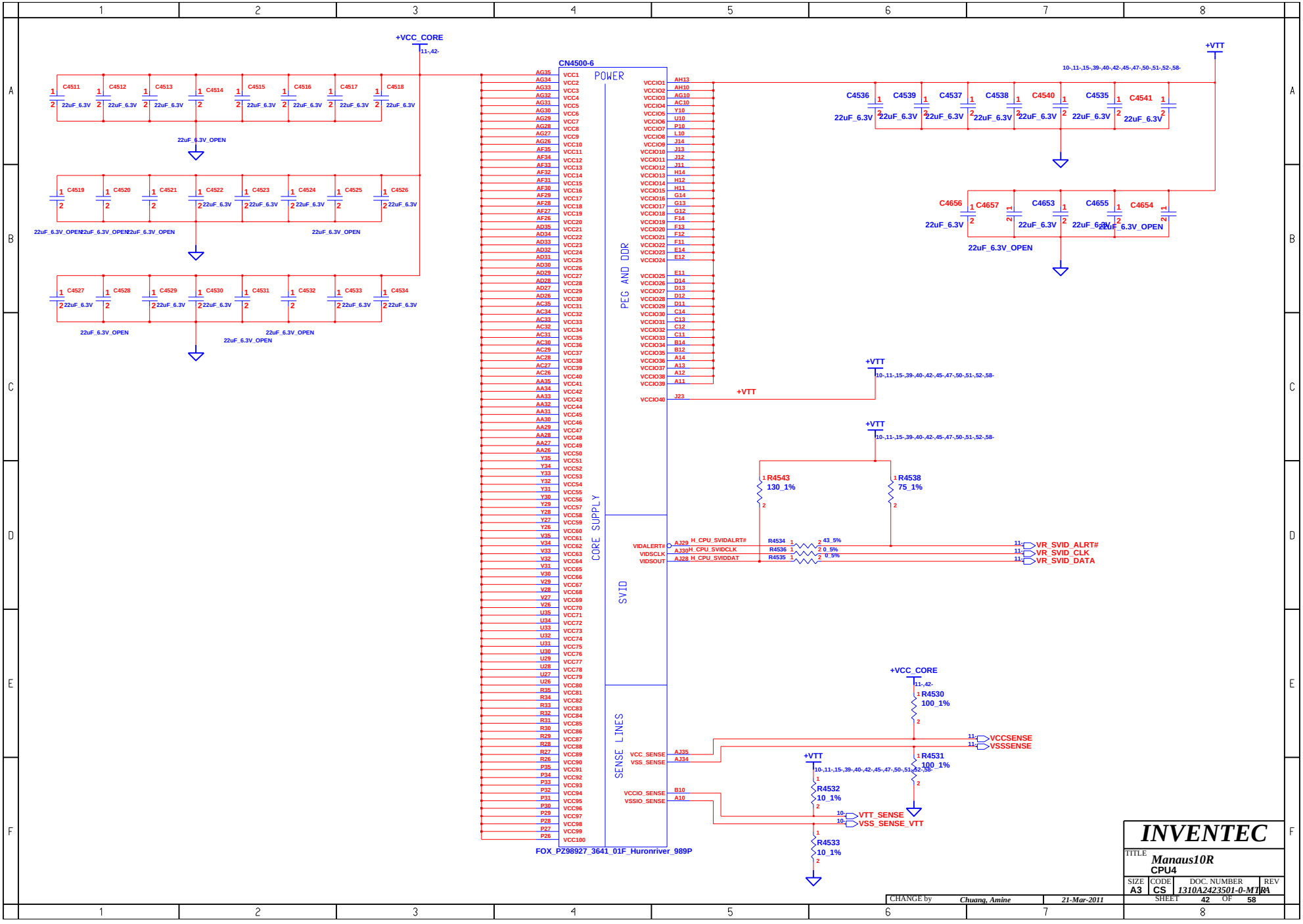
+VCC_CORE
CN4500-6
POWER
PEG AND DDR
CORE SUPPLY
SVID
SENSE LINES
FOX_PZ98927_3641_01F_Huronriver_989P
+VTT
VR_SVID_ALRT#
VR_SVID_CLK
VR_SVID_DATA
VCCSENSE
VSSSENSE
VTT_SENSE
VSS_SENSE_VTT
H_CPU_SVIDALRT#
H_CPU_SVIDCLK
H_CPU_SVIDDAT
R4543 130_1%
R4538 75_1%
R4530 100_1%
R4531 100_1%
R4532 10_1%
R4533 10_1%
INVENTEC
Manaus10R
CPU4
SIZE A3
CODE CS
DOC. NUMBER 1310A2423501-0-MT1RA
REV A
SHEET 42 OF 58
CHANGE by Chuang, Amine
21-Mar-2011

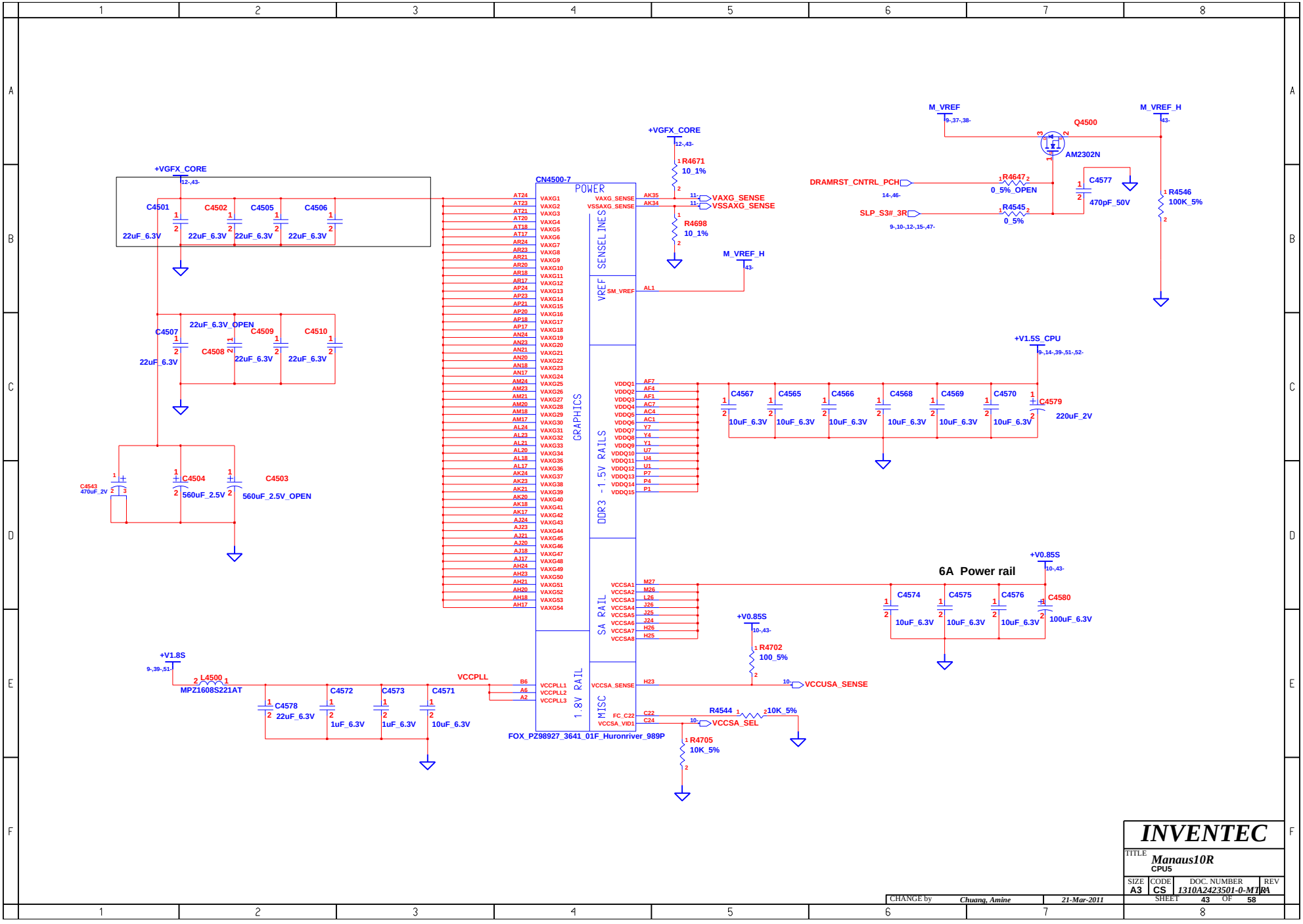

CHANGE by	Chuang, Amine	21-Mar-2011	

INVENTEC

TITLE *Manaus10R*
CPU5

SIZE	CODE	DOC. NUMBER	REV
A3	CS	1310A2423501-0-MT	A

SHEET 43 OF 58

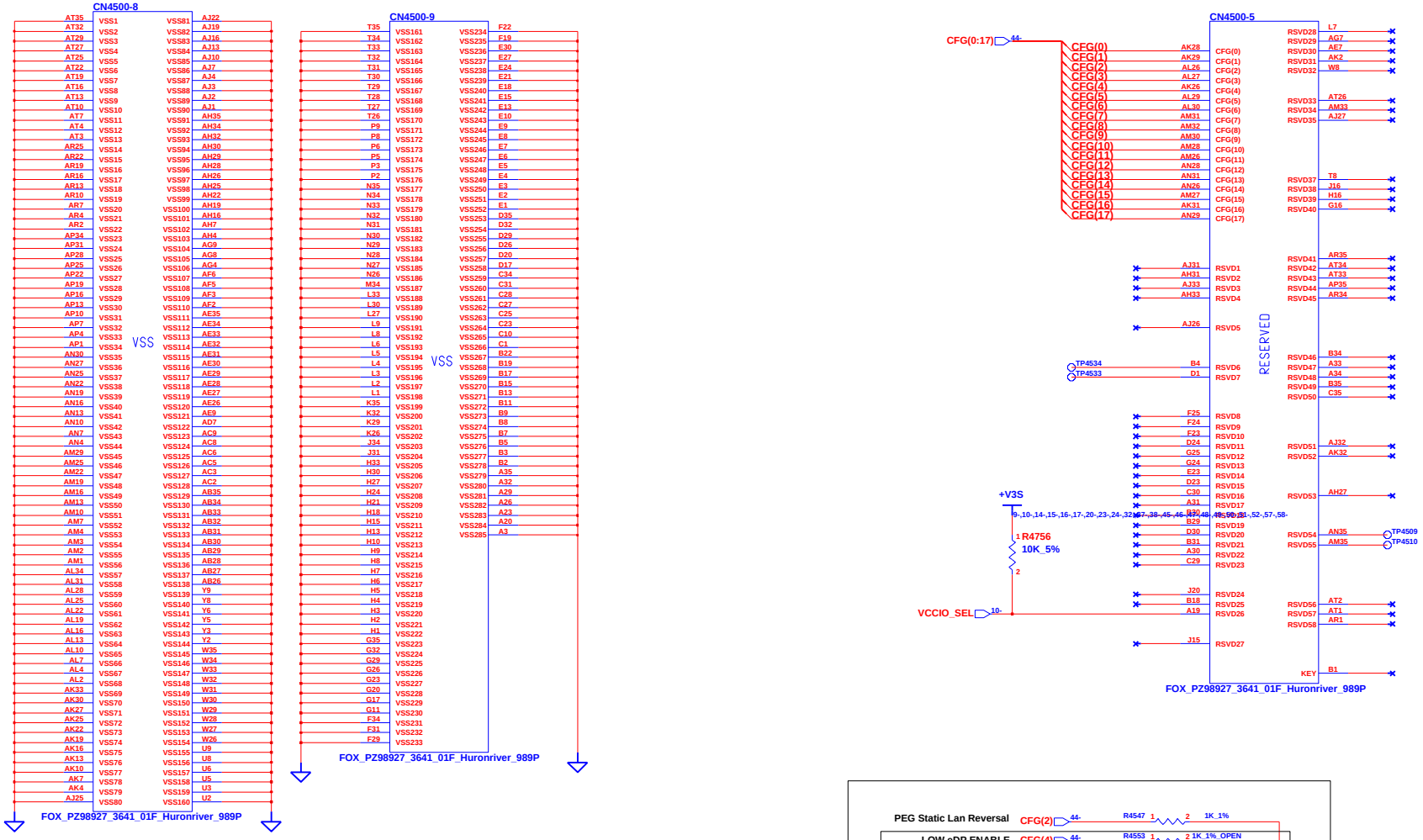

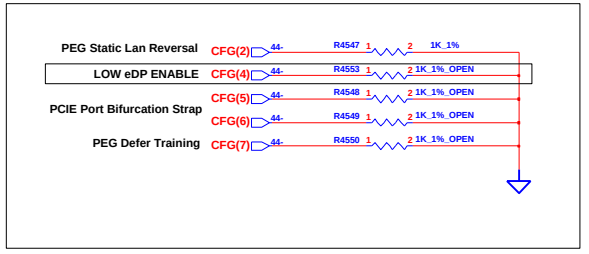

PEG Static Lane Reversal	
CFG(2)	1: (Default) Normal operation 0: Lane Reversed
LOW eDP ENABLE	
CFG(4)	1: (Default) eDP Disabled 0: eDP Enabled
PEG Defer Training	
CFG(7)	1: (Default) PEG Train immediately following xxRESETB de assertion 0: PEG Wait for BIOS for training
PCIE Port Bifurcation Straps	
CFG[6:5]	11: (Default) x16 - Device 1 function 1 and 2 disabled 10: x8, x8 - Device 1 function 1 enabled ; function 2 disabled 01: Reserved - (Device 1 function 1 disabled ; function 2 enabled 00: x8, x4, x4 - Device 1 function 1 and 2 enabled

STRAP PIN

INVENTEC					
TITLE: Manaus10R CPU6					
SIZE: A3	CODE: CS	DOC. NUMBER: 1310A2423501-0-MTRA		REV: A	
CHANGE by: Chuang, Amine		21-Mar-2011	SHEET 44 OF 58		

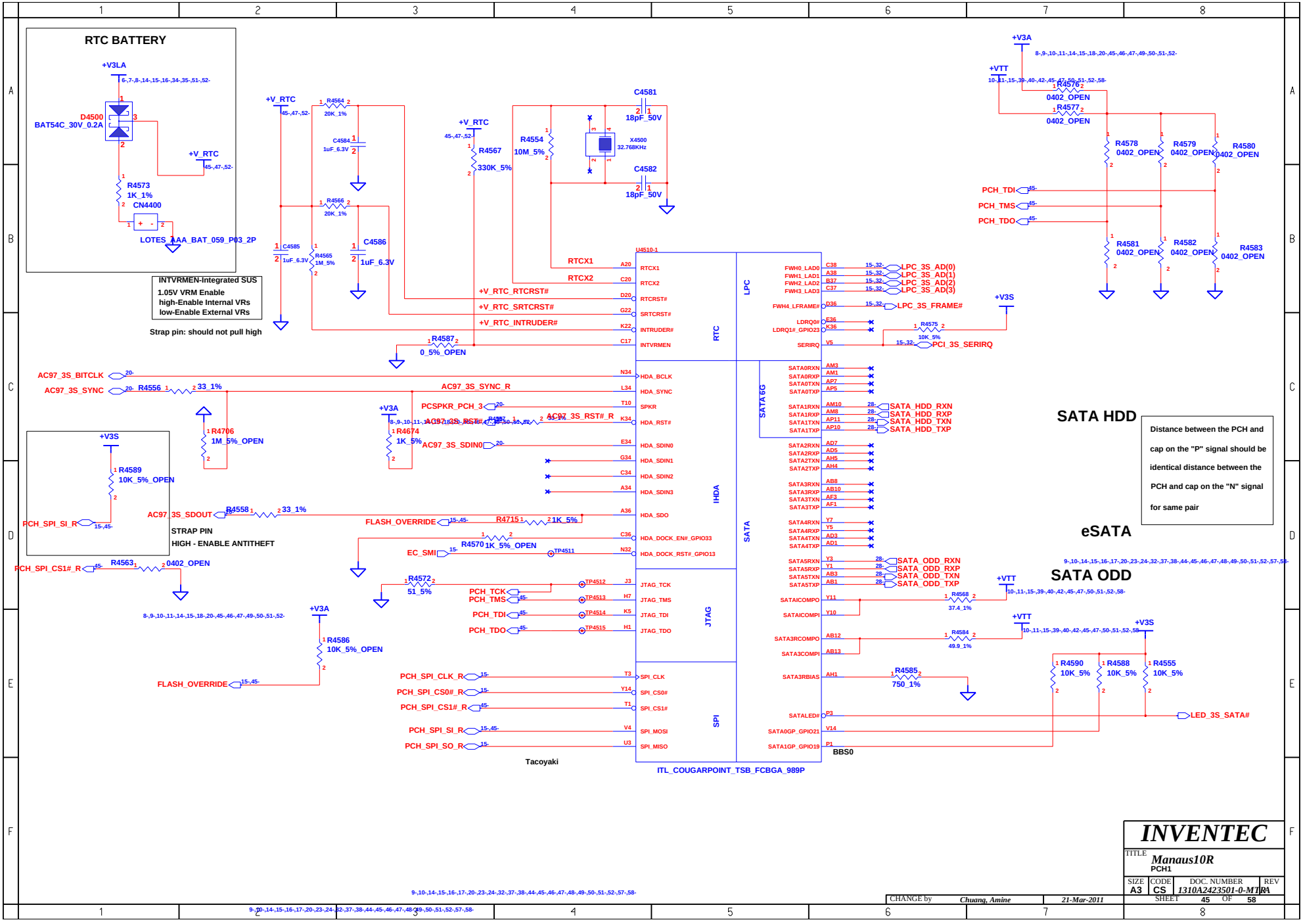
RTC BATTERY
+V3LA
D4500
BAT54C_30V_0.2A
R4573
1K_1%
CN4400
LOTES_AAA_BAT_059_P03_2P
+V_RTC
R4564
20K_1%
C4584
1uF_6.3V
R4566
20K_1%
C4585
1uF_6.3V
R4565
1M_5%
C4586
1uF_6.3V
R4567
330K_5%
R4554
10M_5%
X4500
32.768KHz
C4581
18pF_50V
C4582
18pF_50V
INTVRMEN-Integrated SUS
1.05V VRM Enable
high-Enable Internal VRs
low-Enable External VRs
Strap pin: should not pull high
R4587
0_5%_OPEN
U4510-1
RTCX1
RTCX2
+V_RTC_RTCRST#
+V_RTC_SRTCRST#
+V_RTC_INTRUDER#
RTC
LPC
IHDA
SATA
JTAG
SPI
ITL_COUGARPOINT_TSB_FCBGA_989P
Tacoyaki
AC97_3S_BITCLK
AC97_3S_SYNC
R4556
33_1%
AC97_3S_SYNC_R
PCSPKR_PCH_3
AC97_3S_RST#_R
R4706
1M_5%_OPEN
R4674
1K_5%
AC97_3S_SDIN0
+V3S
R4589
10K_5%_OPEN
AC97_3S_SDOUT
R4558
33_1%
FLASH_OVERRIDE
R4715
1K_5%
STRAP PIN
HIGH - ENABLE ANTITHEFT
EC_SMI
R4570
1K_5%_OPEN
TP4511
PCH_SPI_CS1#_R
R4563
0402_OPEN
R4572
51_5%
PCH_TCK
PCH_TMS
PCH_TDI
PCH_TDO
TP4512
TP4513
TP4514
TP4515
R4586
10K_5%_OPEN
PCH_SPI_CLK_R
PCH_SPI_CS0#_R
PCH_SPI_CS1#_R
PCH_SPI_SI_R
PCH_SPI_SO_R
+V3A
+VTT
R4576
0402_OPEN
R4577
0402_OPEN
R4578
0402_OPEN
R4579
0402_OPEN
R4580
0402_OPEN
R4581
0402_OPEN
R4582
0402_OPEN
R4583
0402_OPEN
PCH_TDI
PCH_TMS
PCH_TDO
LPC_3S_AD(0)
LPC_3S_AD(1)
LPC_3S_AD(2)
LPC_3S_AD(3)
LPC_3S_FRAME#
R4575
10K_5%
PCI_3S_SERIRQ
SATA HDD
SATA_HDD_RXN
SATA_HDD_RXP
SATA_HDD_TXN
SATA_HDD_TXP
Distance between the PCH and cap on the "P" signal should be identical distance between the PCH and cap on the "N" signal for same pair
eSATA
SATA ODD
SATA_ODD_RXN
SATA_ODD_RXP
SATA_ODD_TXN
SATA_ODD_TXP
R4568
37.4_1%
R4584
49.9_1%
R4585
750_1%
R4590
10K_5%
R4588
10K_5%
R4555
10K_5%
LED_3S_SATA#
BBS0
INVENTEC
TITLE
Manaus10R
PCH1
SIZE A3
CODE CS
DOC. NUMBER 1310A2423501-0-MT[RA]
REV
SHEET 45 OF 58
CHANGE by Chuang, Amine
21-Mar-2011

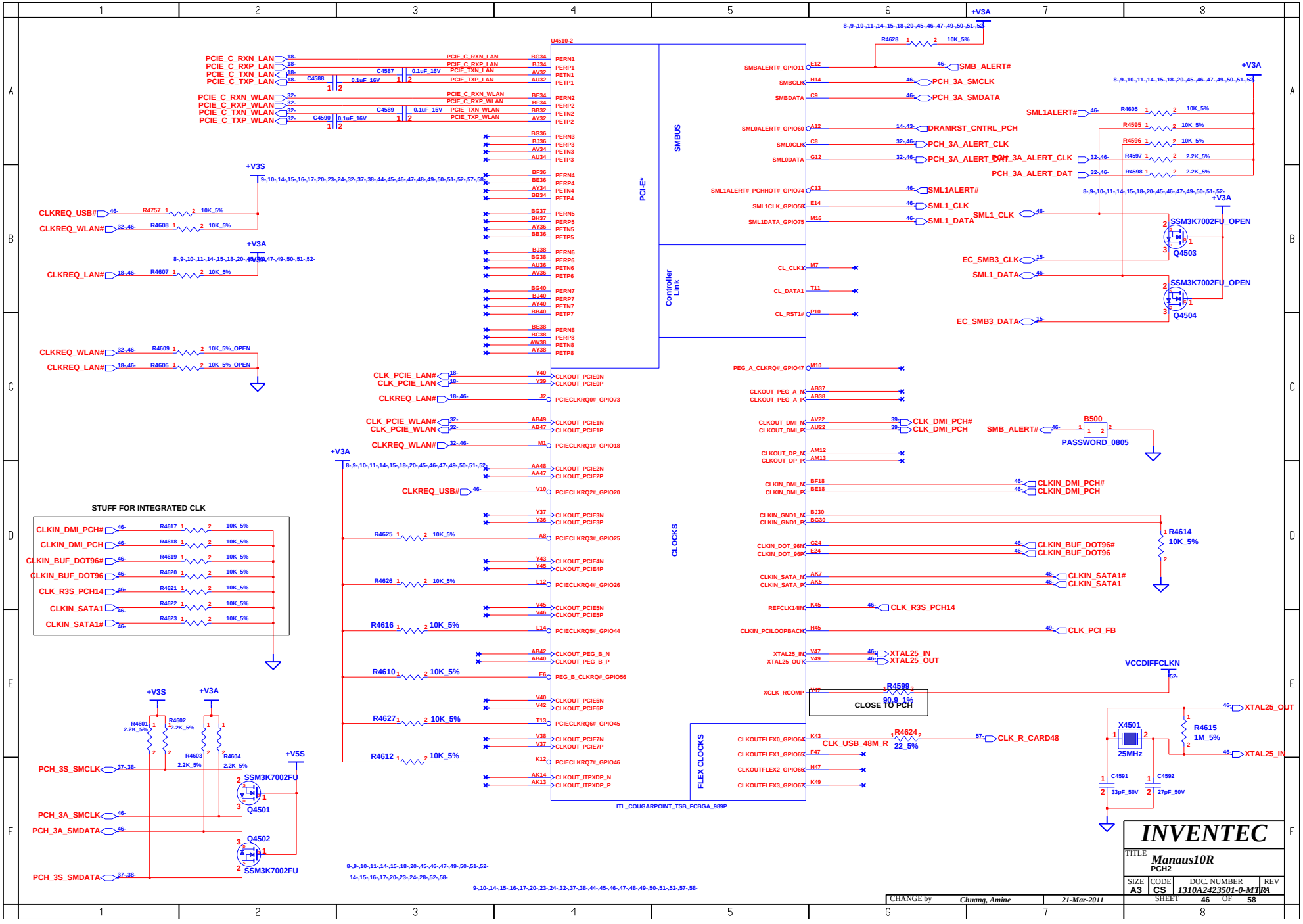

INVENTEC

TITLE Manaus10R
PCH2

SIZE	CODE	DOC. NUMBER	REV
A3	CS	1310A2423501-0-MT	A

SHEET 46 OF 58

CHANGE by	Chuang, Amine	21-Mar-2011

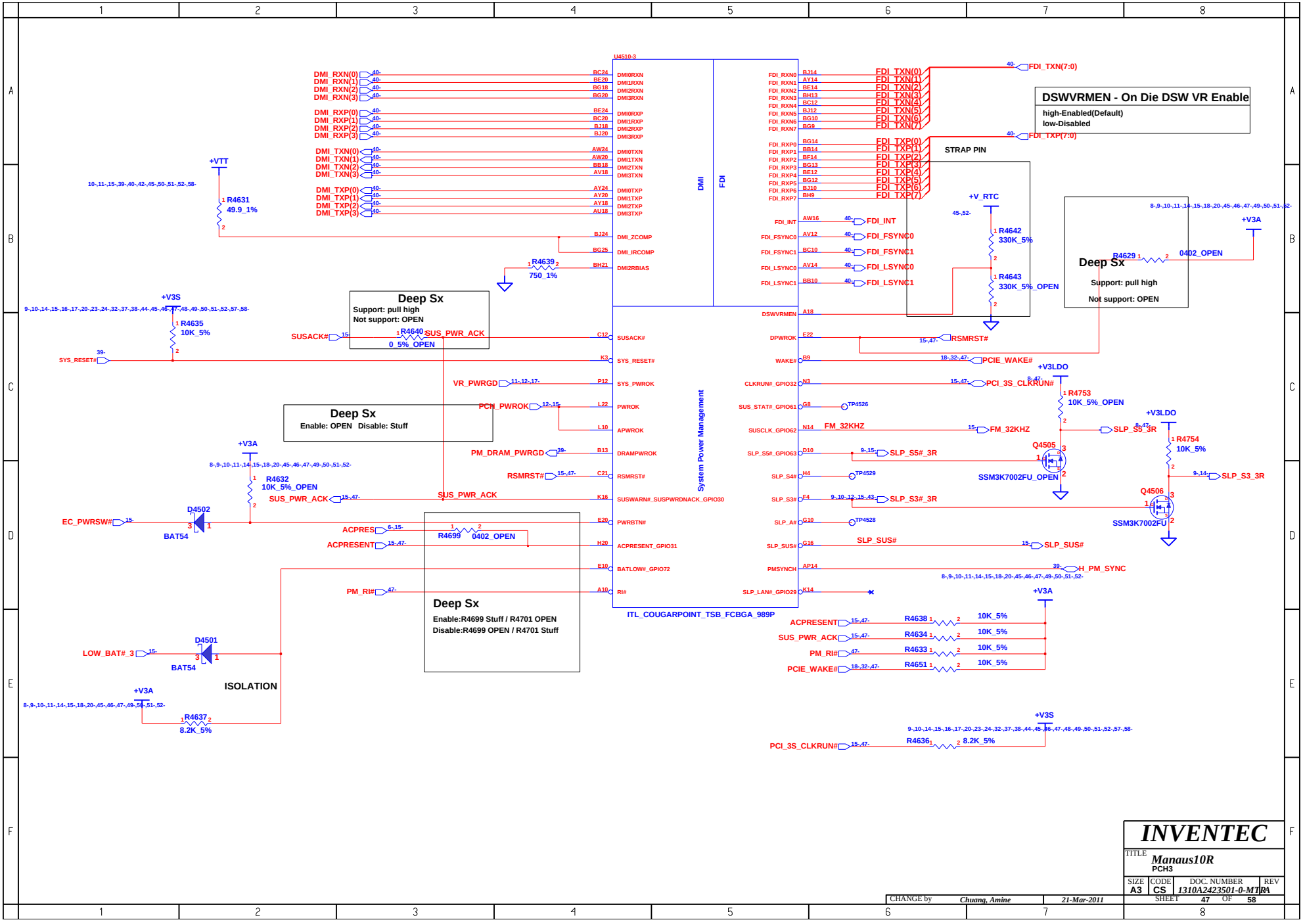
U4510-3
DMI
FDI
System Power Management
ITL_COUGARPOINT_TSB_FCBGA_989P
DMI_RXN(0)
DMI_RXN(1)
DMI_RXN(2)
DMI_RXN(3)
DMI_RXP(0)
DMI_RXP(1)
DMI_RXP(2)
DMI_RXP(3)
DMI_TXN(0)
DMI_TXN(1)
DMI_TXN(2)
DMI_TXN(3)
DMI_TXP(0)
DMI_TXP(1)
DMI_TXP(2)
DMI_TXP(3)
DMI0RXN
DMI1RXN
DMI2RXN
DMI3RXN
DMI0RXP
DMI1RXP
DMI2RXP
DMI3RXP
DMI0TXN
DMI1TXN
DMI2TXN
DMI3TXN
DMI0TXP
DMI1TXP
DMI2TXP
DMI3TXP
DMI_ZCOMP
DMI_IRCOMP
DMI2RBIAS
FDI_TXN(0)
FDI_TXN(1)
FDI_TXN(2)
FDI_TXN(3)
FDI_TXN(4)
FDI_TXN(5)
FDI_TXN(6)
FDI_TXN(7)
FDI_TXN(7:0)
FDI_TXP(0)
FDI_TXP(1)
FDI_TXP(2)
FDI_TXP(3)
FDI_TXP(4)
FDI_TXP(5)
FDI_TXP(6)
FDI_TXP(7)
FDI_TXP(7:0)
FDI_INT
FDI_FSYNC0
FDI_FSYNC1
FDI_LSYNC0
FDI_LSYNC1
DSWVRMEN
DPWROK
WAKE#
CLKRUN#_GPIO32
SUS_STAT#_GPIO61
SUSCLK_GPIO62
SLP_S5#_GPIO63
SLP_S4#
SLP_S3#
SLP_A#
SLP_SUS#
PMSYNCH
SLP_LAN#_GPIO29
SUSACK#
SYS_RESET#
SYS_PWROK
PWROK
APWROK
DRAMPWROK
RSMRST#
SUSWARN#_SUSPWRDNACK_GPIO30
PWRBTN#
ACPRESENT_GPIO31
BATLOW#_GPIO72
RI#
DSWVRMEN - On Die DSW VR Enable
high-Enabled(Default)
low-Disabled
STRAP PIN
+V_RTC
R4642 330K_5%
R4643 330K_5%_OPEN
Deep Sx
Support: pull high
Not support: OPEN
R4629 0402_OPEN
+V3A
+VTT
R4631 49.9_1%
R4639 750_1%
+V3S
R4635 10K_5%
SUSACK#
R4640 0_5%_OPEN
SUS_PWR_ACK
SYS_RESET#
VR_PWRGD
PCH_PWROK
PM_DRAM_PWRGD
RSMRST#
Deep Sx
Enable: OPEN Disable: Stuff
R4632 10K_5%_OPEN
D4502
BAT54
EC_PWRSW#
ACPRES
ACPRESENT
R4699 0402_OPEN
Deep Sx
Enable:R4699 Stuff / R4701 OPEN
Disable:R4699 OPEN / R4701 Stuff
PM_RI#
D4501
LOW_BAT#_3
ISOLATION
R4637 8.2K_5%
RSMRST#
PCIE_WAKE#
PCI_3S_CLKRUN#
+V3LDO
R4753 10K_5%_OPEN
FM_32KHZ
SLP_S5#_3R
Q4505
SSM3K7002FU_OPEN
R4754 10K_5%
SLP_S3_3R
Q4506
SSM3K7002FU
SLP_S3#_3R
SLP_SUS#
H_PM_SYNC
R4638 10K_5%
R4634 10K_5%
R4633 10K_5%
R4651 10K_5%
R4636 8.2K_5%
INVENTEC
TITLE
Manaus10R
PCH3
SIZE A3
CODE CS
DOC. NUMBER 1310A2423501-0-MTRA
REV A
SHEET 47 OF 58
CHANGE by Chuang, Amine
21-Mar-2011

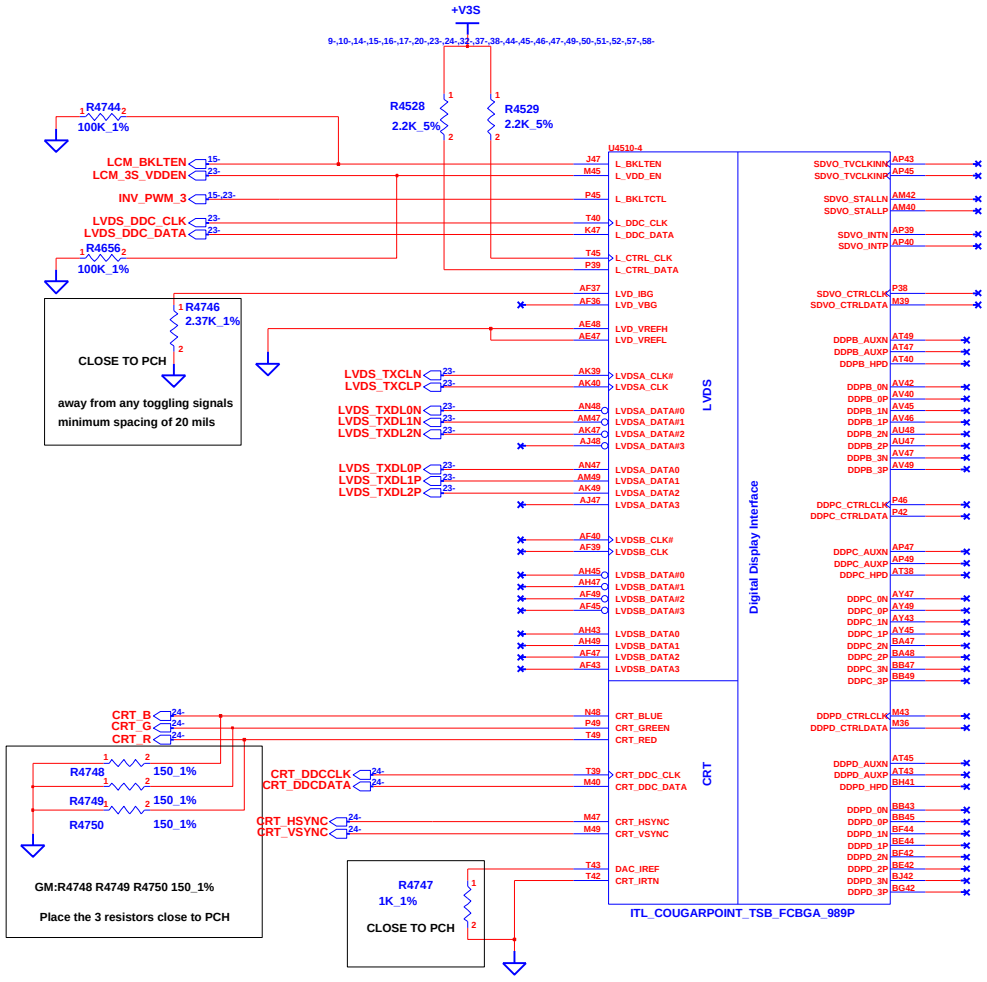

INVENTEC			
TITLE Manaus10R PCH4			
SIZE A3	CODE CS	DOC. NUMBER 1310A2423501-0-MT	REV A
CHANGE by Chuang, Amine	21-Mar-2011	SHEET 48 OF 58	

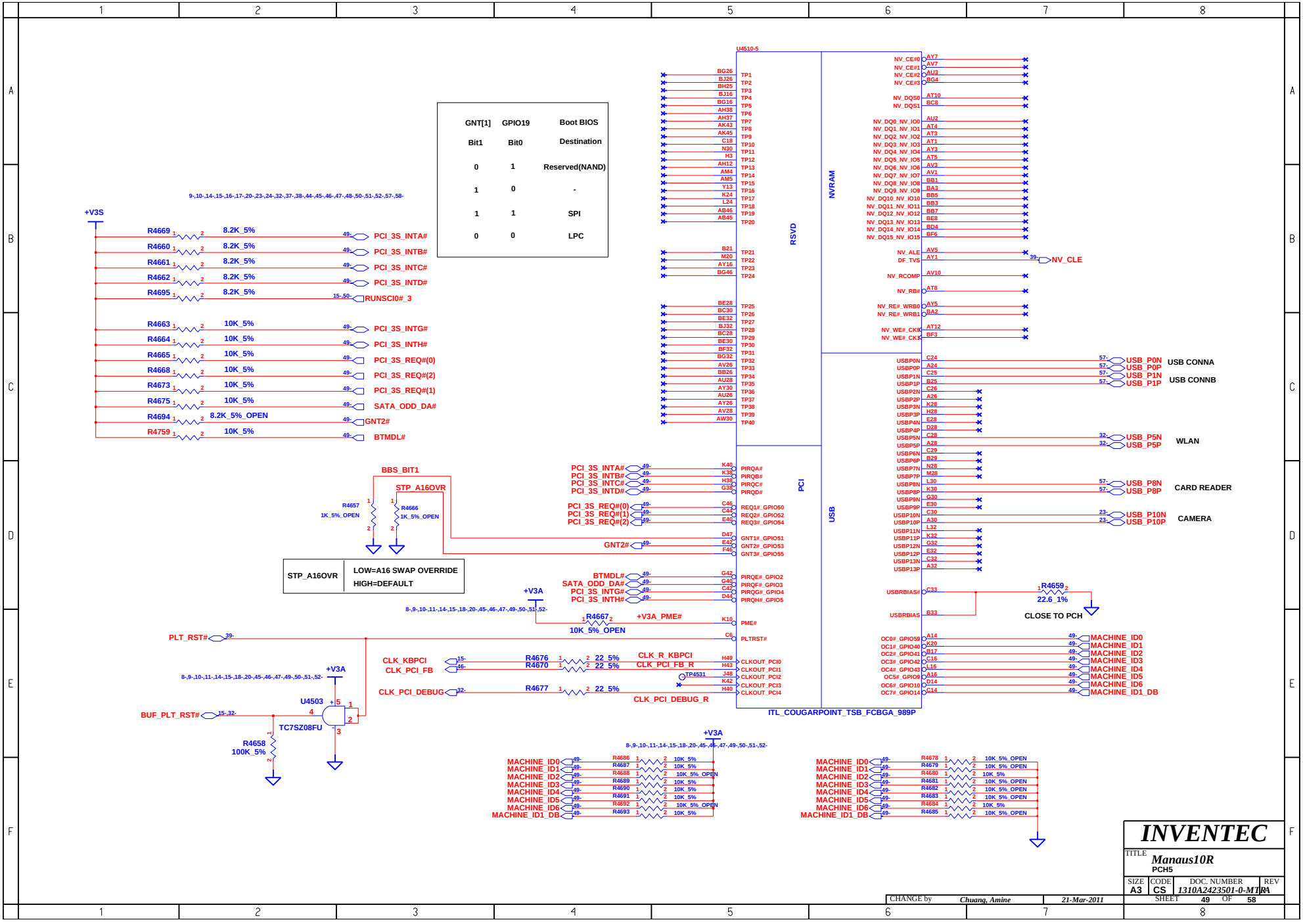
U4510-5
ITL_COUGARPOINT_TSB_FCBGA_989P
RSVD
NVRAM
PCI
USB
+V3S
R4669 8.2K_5%
R4660 8.2K_5%
R4661 8.2K_5%
R4662 8.2K_5%
R4695 8.2K_5%
PCI_3S_INTA#
PCI_3S_INTB#
PCI_3S_INTC#
PCI_3S_INTD#
RUNSCI0#_3
R4663 10K_5%
R4664 10K_5%
R4665 10K_5%
R4668 10K_5%
R4673 10K_5%
R4675 10K_5%
R4694 8.2K_5%_OPEN
R4759 10K_5%
PCI_3S_INTG#
PCI_3S_INTH#
PCI_3S_REQ#(0)
PCI_3S_REQ#(2)
PCI_3S_REQ#(1)
SATA_ODD_DA#
GNT2#
BTMDL#
GNT[1] GPIO19 Boot BIOS
Bit1 Bit0 Destination
0 1 Reserved(NAND)
1 0 -
1 1 SPI
0 0 LPC
NV_CLE
USB_P0N USB CONNA
USB_P0P
USB_P1N USB CONNB
USB_P1P
USB_P5N WLAN
USB_P5P
USB_P8N CARD READER
USB_P8P
USB_P10N CAMERA
USB_P10P
R4659 22.6_1%
CLOSE TO PCH
BBS_BIT1
STP_A16OVR
R4657 1K_5%_OPEN
R4666 1K_5%_OPEN
STP_A16OVR LOW=A16 SWAP OVERRIDE
HIGH=DEFAULT
+V3A
R4667 10K_5%_OPEN
+V3A_PME#
PLT_RST#
CLK_KBPCI
CLK_PCI_FB
R4676 22_5%
R4670 22_5%
CLK_R_KBPCI
CLK_PCI_FB_R
TP4531
CLK_PCI_DEBUG
R4677 22_5%
CLK_PCI_DEBUG_R
U4503
TC7SZ08FU
BUF_PLT_RST#
R4658 100K_5%
MACHINE_ID0
MACHINE_ID1
MACHINE_ID2
MACHINE_ID3
MACHINE_ID4
MACHINE_ID5
MACHINE_ID6
MACHINE_ID1_DB
R4686 10K_5%
R4687 10K_5%
R4688 10K_5%_OPEN
R4689 10K_5%
R4690 10K_5%
R4691 10K_5%
R4692 10K_5%_OPEN
R4693 10K_5%
R4678 10K_5%_OPEN
R4679 10K_5%_OPEN
R4680 10K_5%
R4681 10K_5%_OPEN
R4682 10K_5%_OPEN
R4683 10K_5%_OPEN
R4684 10K_5%
R4685 10K_5%_OPEN
INVENTEC
TITLE Manaus10R
PCH5
SIZE A3
CODE CS
DOC. NUMBER 1310A2423501-0-MT
REV A
CHANGE by Chuang, Amine
21-Mar-2011
SHEET 49 OF 58

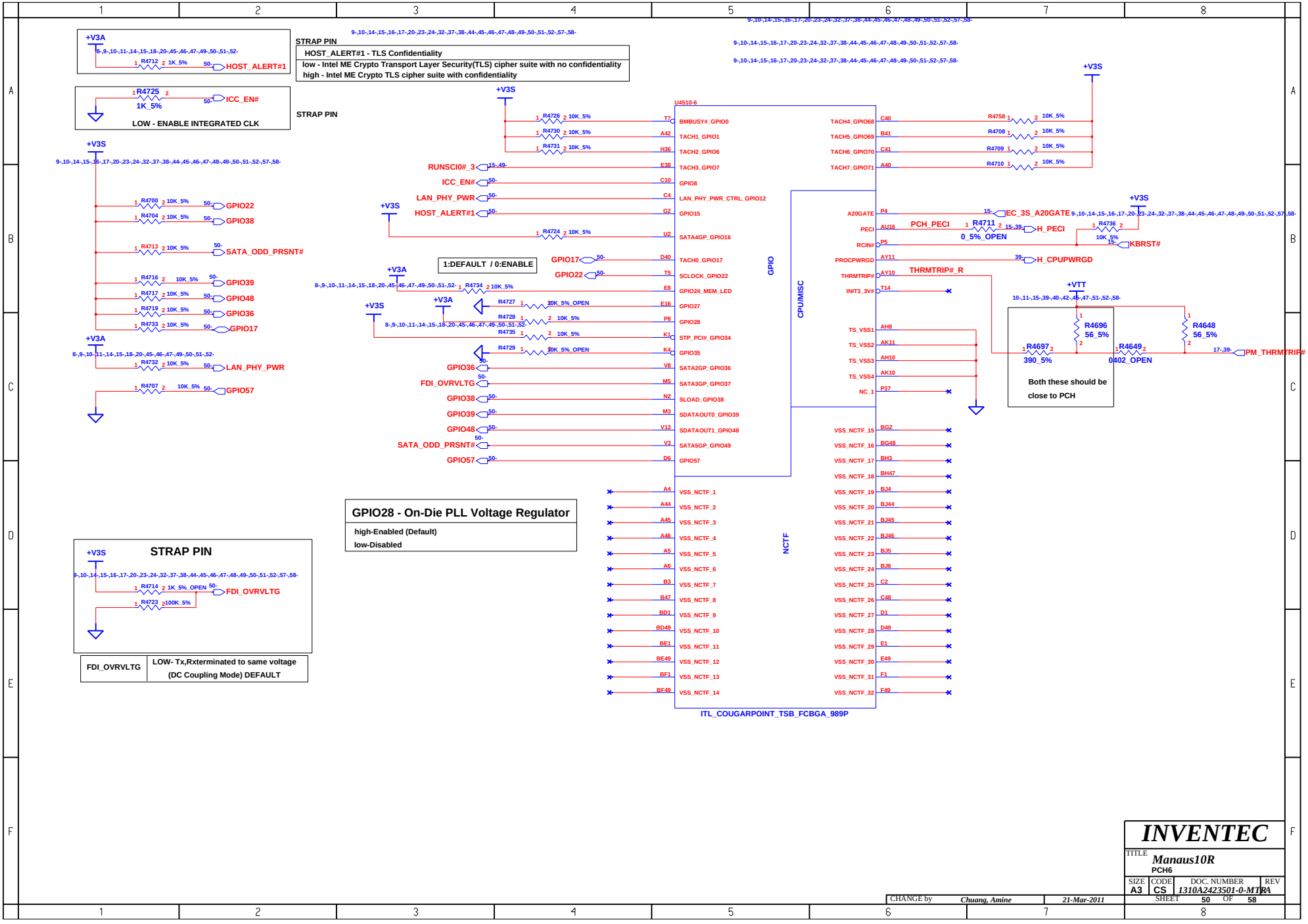
STRAP PIN
HOST_ALERT#1 - TLS Confidentiality
low - Intel ME Crypto Transport Layer Security(TLS) cipher suite with no confidentiality
high - Intel ME Crypto TLS cipher suite with confidentiality
HOST_ALERT#1
ICC_EN#
LOW - ENABLE INTEGRATED CLK
STRAP PIN
GPIO22
GPIO38
SATA_ODD_PRSNT#
GPIO39
GPIO48
GPIO36
GPIO17
LAN_PHY_PWR
GPIO57
1:DEFAULT / 0:ENABLE
GPIO28 - On-Die PLL Voltage Regulator
high-Enabled (Default)
low-Disabled
STRAP PIN
FDI_OVRVLTG
FDI_OVRVLTG
LOW- Tx,Rxterminated to same voltage
(DC Coupling Mode) DEFAULT
U4510-6
GPIO
CPU/MISC
NCTF
ITL_COUGARPOINT_TSB_FCBGA_989P
PCH_PECI
EC_3S_A20GATE
H_PECI
KBRST#
H_CPUPWRGD
THRMTRIP#_R
PM_THRMTRIP#
Both these should be
close to PCH
INVENTEC
Manaus10R
PCH6
SIZE A3
CODE CS
DOC. NUMBER 1310A2423501-0-MTRA
REV A
SHEET 50 OF 58
CHANGE by Chuang, Amine
21-Mar-2011

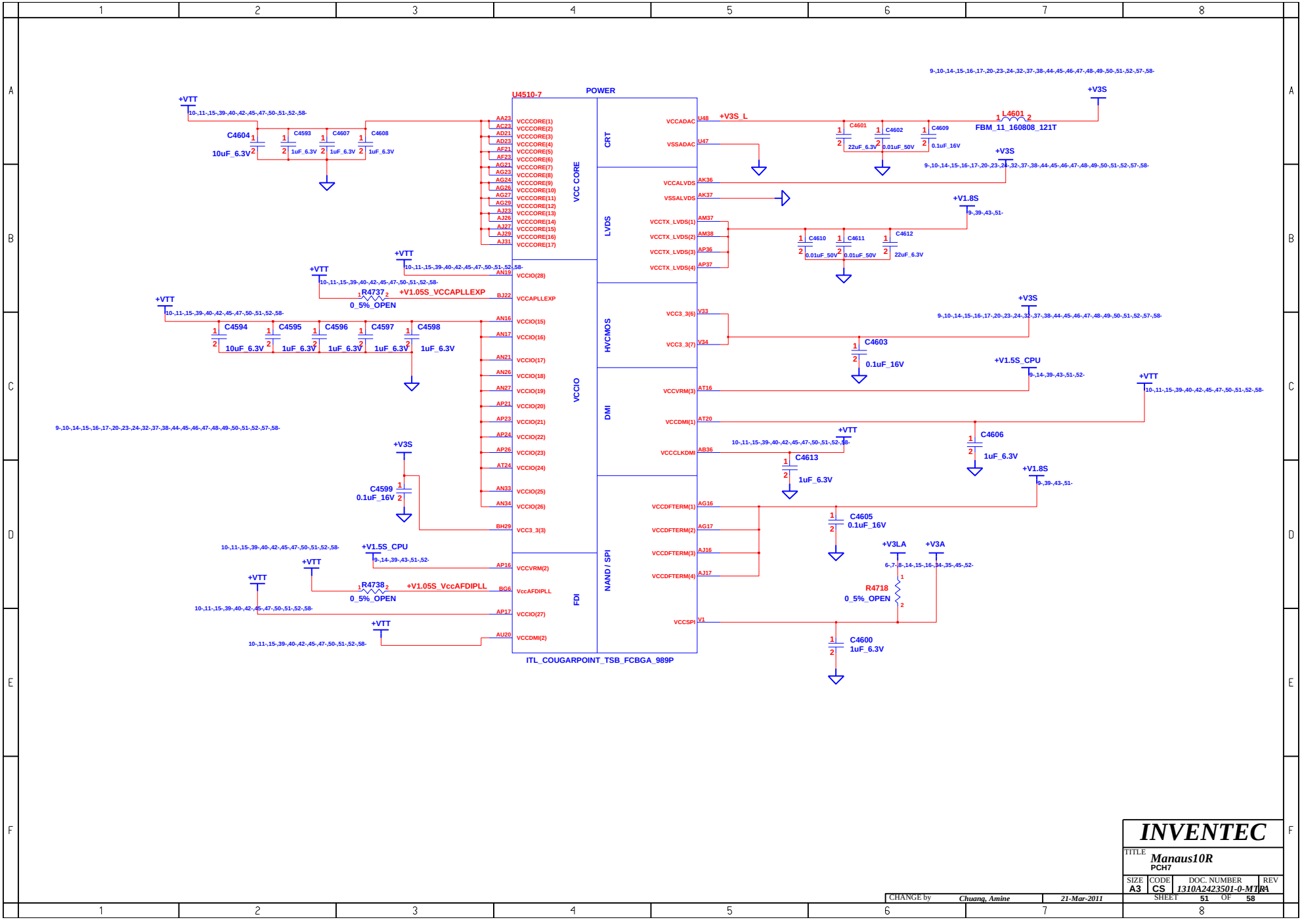

CHANGE by	Chuang, Amine	21-Mar-2011	

INVENTEC

TITLE: *Manaus10R*
PCH7

SIZE	CODE	DOC. NUMBER	REV
A3	CS	1310A2423501-0-MTRA	A

SHEET 51 OF 58

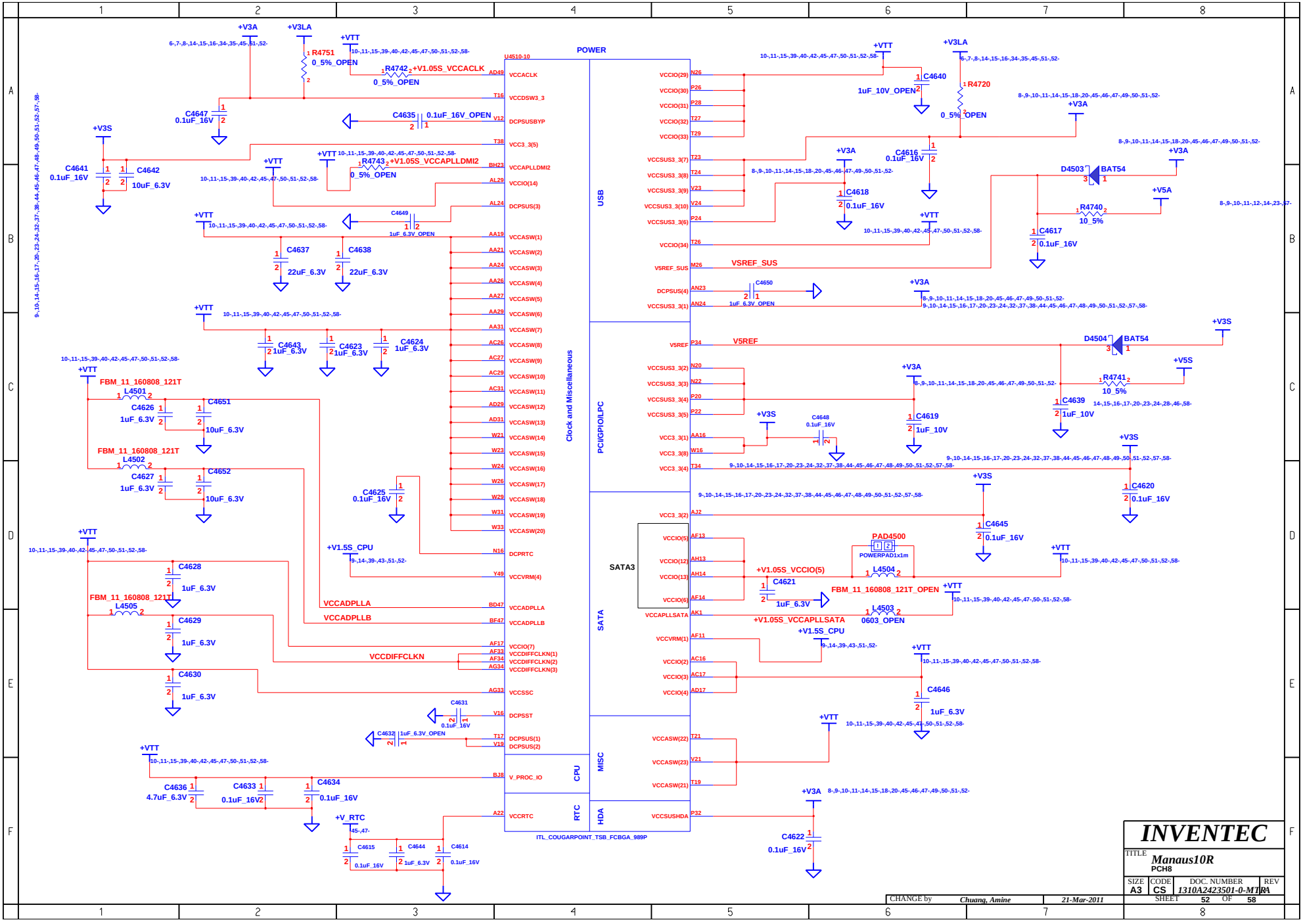
POWER
U4510-10
VCCACLK
VCCDSW3_3
DCPSUSBYP
VCC3_3(5)
VCCAPLLDMI2
VCCIO(14)
DCPSUS(3)
VCCASW(1)
VCCASW(2)
VCCASW(3)
VCCASW(4)
VCCASW(5)
VCCASW(6)
VCCASW(7)
VCCASW(8)
VCCASW(9)
VCCASW(10)
VCCASW(11)
VCCASW(12)
VCCASW(13)
VCCASW(14)
VCCASW(15)
VCCASW(16)
VCCASW(17)
VCCASW(18)
VCCASW(19)
VCCASW(20)
DCPRTC
VCCVRM(4)
VCCADPLLA
VCCADPLLB
VCCIO(7)
VCCDIFFCLKN(1)
VCCDIFFCLKN(2)
VCCDIFFCLKN(3)
VCCSSC
DCPSST
DCPSUS(1)
DCPSUS(2)
V_PROC_IO
VCCRTC
Clock and Miscellaneous
CPU
RTC
USB
PCI/GPIO/LPC
SATA
MISC
HDA
SATA3
VCCIO(29)
VCCIO(30)
VCCIO(31)
VCCIO(32)
VCCIO(33)
VCCSUS3_3(7)
VCCSUS3_3(8)
VCCSUS3_3(9)
VCCSUS3_3(10)
VCCSUS3_3(6)
VCCIO(34)
VSREF_SUS
DCPSUS(4)
VCCSUS3_3(1)
VSREF
VCCSUS3_3(2)
VCCSUS3_3(3)
VCCSUS3_3(4)
VCCSUS3_3(5)
VCC3_3(1)
VCC3_3(8)
VCC3_3(4)
VCC3_3(2)
VCCIO(5)
VCCIO(12)
VCCIO(13)
VCCIO(6)
VCCAPLLSATA
VCCVRM(1)
VCCIO(2)
VCCIO(3)
VCCIO(4)
VCCASW(22)
VCCASW(23)
VCCASW(21)
VCCSUSHDA
ITL_COUGARPOINT_TSB_FCBGA_989P
+V3A
+V3LA
+VTT
+V3S
+V5A
+V5S
+V_RTC
R4751 0_5%_OPEN
R4742 0_5%_OPEN
+V1.05S_VCCACLK
C4647 0.1uF_16V
C4635 0.1uF_16V_OPEN
C4641 0.1uF_16V
C4642 10uF_6.3V
R4743 0_5%_OPEN
+V1.05S_VCCAPLLDMI2
C4649 1uF_6.3V_OPEN
C4637 22uF_6.3V
C4638 22uF_6.3V
C4643 1uF_6.3V
C4623 1uF_6.3V
C4624 1uF_6.3V
FBM_11_160808_121T
L4501
C4626 1uF_6.3V
C4651 10uF_6.3V
L4502
C4627 1uF_6.3V
C4652 10uF_6.3V
C4625 0.1uF_16V
+V1.5S_CPU
C4628 1uF_6.3V
L4505
C4629 1uF_6.3V
C4630 1uF_6.3V
VCCADPLLA
VCCADPLLB
VCCDIFFCLKN
C4631 0.1uF_16V
C4632 1uF_6.3V_OPEN
C4636 4.7uF_6.3V
C4633 0.1uF_16V
C4634 0.1uF_16V
C4615 0.1uF_16V
C4644 1uF_6.3V
C4614 0.1uF_16V
C4640 1uF_10V_OPEN
R4720 0_5%_OPEN
C4616 0.1uF_16V
C4618 0.1uF_16V
D4503 BAT54
R4740 10_5%
C4617 0.1uF_16V
C4650 1uF_6.3V_OPEN
D4504 BAT54
R4741 10_5%
C4639 1uF_10V
C4648 0.1uF_16V
C4619 1uF_10V
C4620 0.1uF_16V
C4645 0.1uF_16V
PAD4500
POWERPAD1x1m
+V1.05S_VCCIO(5)
C4621 1uF_6.3V
L4504
FBM_11_160808_121T_OPEN
L4503 0603_OPEN
+V1.05S_VCCAPLLSATA
C4646 1uF_6.3V
C4622 0.1uF_16V
INVENTEC
TITLE
Manaus10R
PCH8
SIZE A3
CODE CS
DOC. NUMBER 1310A2423501-0-MT
REV A
SHEET 52 OF 58
CHANGE by Chuang, Amine
21-Mar-2011

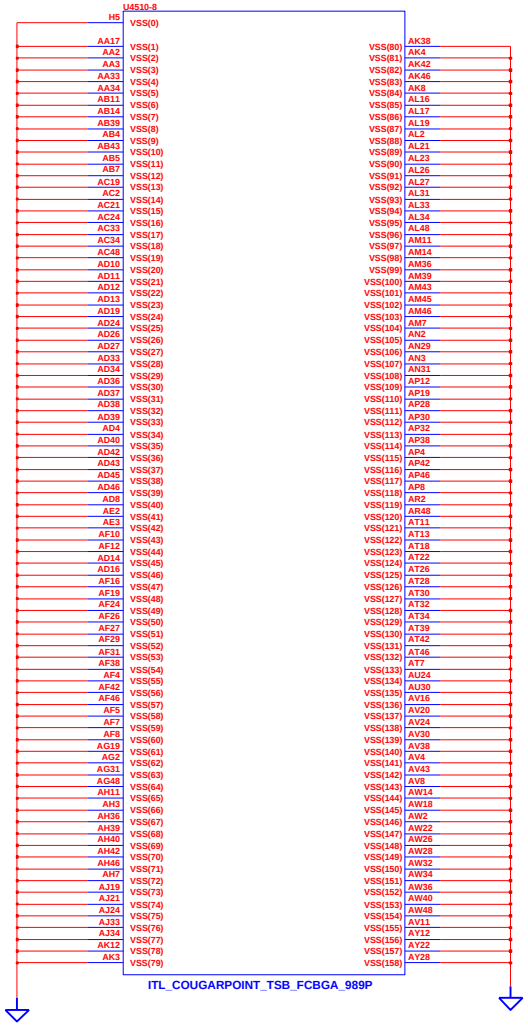

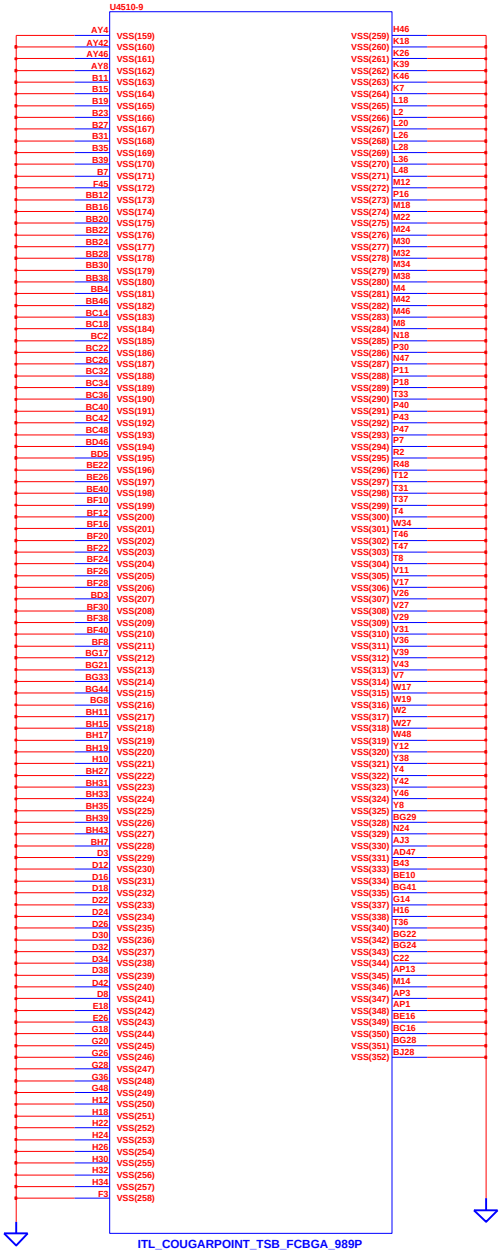

CHANGE by	Chuang, Amine	21-Mar-2011	

INVENTEC

TITLE: *Manaus10R*
PCH9

SIZE	CODE	DOC. NUMBER	REV
A3	CS	1310A2423501-0-MTRA	A

SHEET 53 OF 58

PICK BUTTON

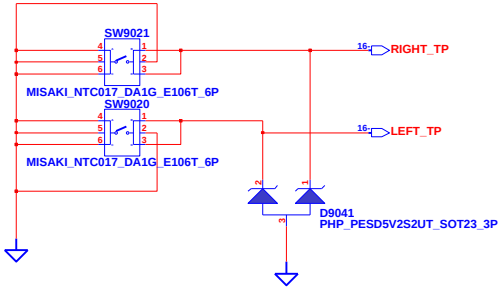

CHANGE by	Chuang, Amine	21-Mar-2011	

INVENTEC

TITLE *Manaus10R*
PICK BUTTON

SIZE	CODE	DOC. NUMBER	REV
A3	CS	1310A2423501-0-MT[illegible]	A

SHEET 54 OF 58

SKIP

CHANGE by	Chuang, Amine	21-Mar-2011	

INVENTEC

TITLE *Manaus10R*

SIZE	CODE	DOC. NUMBER	REV
A3	CS	1310A2423501-0-MTRA	A

SHEET 55 OF 58

POWER BUTTON

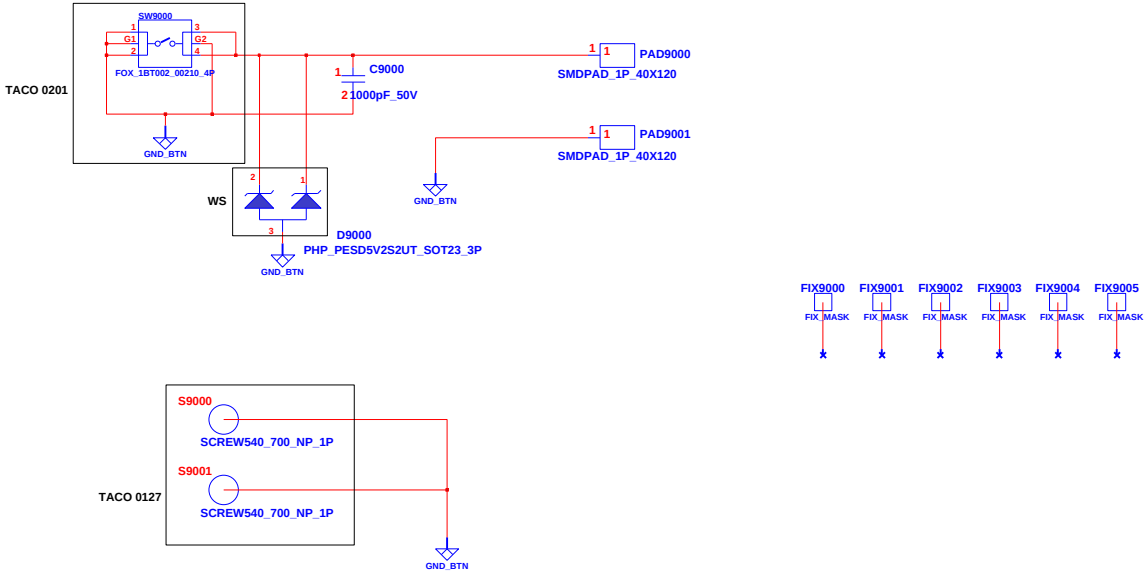

CHANGE by	Chuang, Amine	21-Mar-2011	

INVENTEC

TITLE *Manaus10R*
POWER BUTTON BOARD

SIZE	CODE	DOC. NUMBER	REV
A3	CS	1310A2423501-0-MT	A

SHEET 56 OF 58

CARD READER & USB BOARD

USB

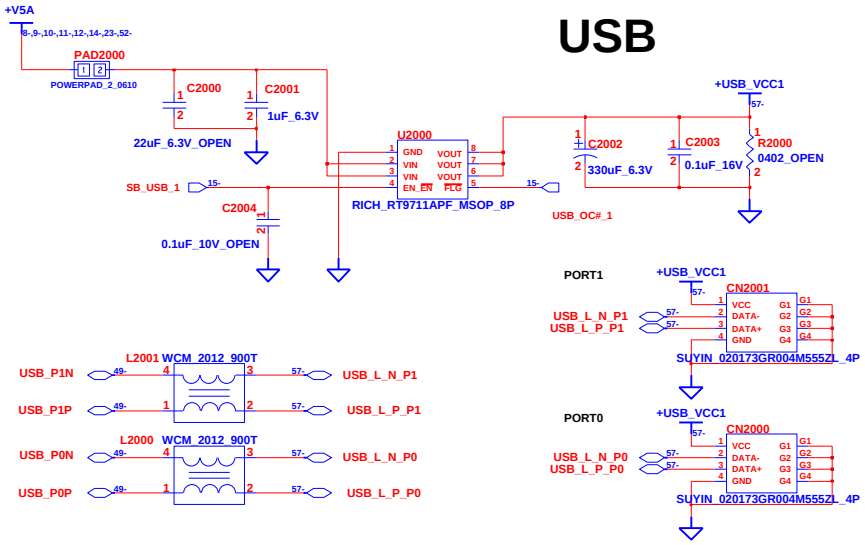

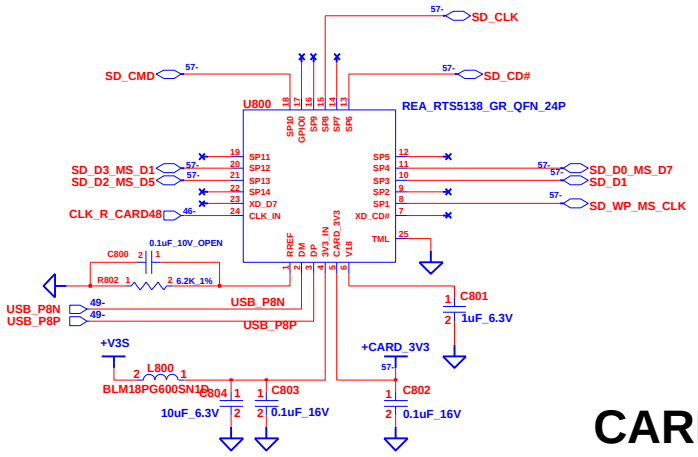

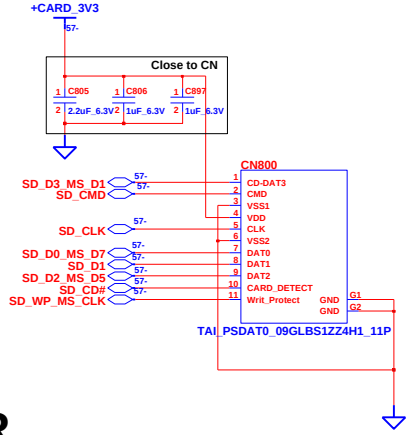

CARD READER

CHANGE by	Chuang, Amine	21-Mar-2011	

INVENTEC

TITLE: Manaus10R
CARDREADER & USB

SIZE	CODE	DOC. NUMBER	REV
A3	CS	1310A2423501-0-MTRA	A

SHEET 57 OF 58

EMI

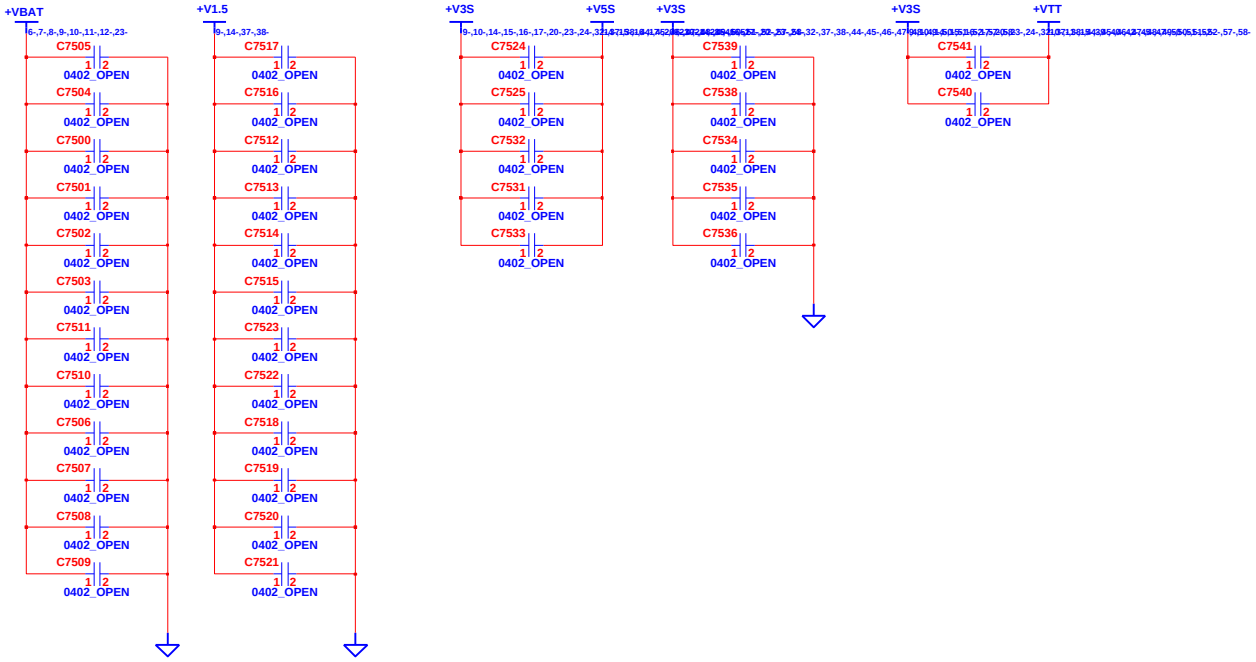

CHANGE by	Chuang, Amine	21-Mar-2011	

INVENTEC

TITLE *Manaus10R*
EMI

SIZE	CODE	DOC. NUMBER	REV
A3	CS	1310A2423501-0-MT	A

SHEET 58 OF 58