Miami 10

Pre MP BUILD

2007 0424

DATE	CHANGE NO.	REV

	EE	DATE	POWER	DATE
DRAWER				
DESIGN				
CHECK				
RESPONSIBLE				

SIZE = 3 VER :

FILE NAME : XXXX-XXXXXX-XX

P/N XXXXXXXXXXXX

INVENTEC

TITLE *Miami 10*

SIZE	CODE	DOC. NUMBER	REV
A3	CS	*1310A21108*	*A04*

SHEET 1 OF 59

TABLE OF CONTENTS

PAGE	PAGE	PAGE
1.COVER PAGE	33.S/B ICH8 4	58.EMI
2.INDEX	34.S/B ICH8 5	59.DRILL HOLE
3.BLOCK DIAGRAM	35.CARDBUS CONTROLLER	
4.POWER SEQUENCE BLOCK	36.PCMCIA CONN	
5-12.SYSTEM POWER	37.5 IN 1 CARD SLOT	
13.CLOCK GENERATOR	38.1394 CONTROLLER	
14.CPU Merom1	39.EXPRESS CARD CONN	
15.CPU Merom2	40.LAN CONTROLLER	
16.CPU Merom3	41.RJ11/45 & TRANSFORMER	
17.CPU Merom4	42.WLAN MINI CARD CONN	
18.FAN & THERMAL CONTROLLER	43.SATA HDD CONN	
19.N/B Calistoga 1	44.ODD CONN	
20.N/B Calistoga 2	45.USB CONN	
21.N/B Calistoga 3	46.BLUE TOOTH CONN	
22.N/B Calistoga 4	47.SIM CARD & 3G CONN	
23.N/B Calistoga 5	48.SUPER I/O	
24.N/B Calistoga 6	49.K/B & TP/B CONN	
25.N/B Calistoga 7	50.FINGERPRINT & CAMERA CONN & CIR	
26.DDR2 DIMM0	51.AZALIA CODEC	
27.DDR2 DIMM1	52.AUDIO AMP & MIC & HP	
28.DDR DAMPING	53.MDC 1.5 CONN	
29.LCD CONN	54.KILL & LIDSWITCH & LED	
30.S/B ICH8 1	55.CRT & SVIDEO DB	
31.S/B ICH8 2	56.USB (DB)	
32.S/B ICH8 3	57.PICK BUTTON BOARD	

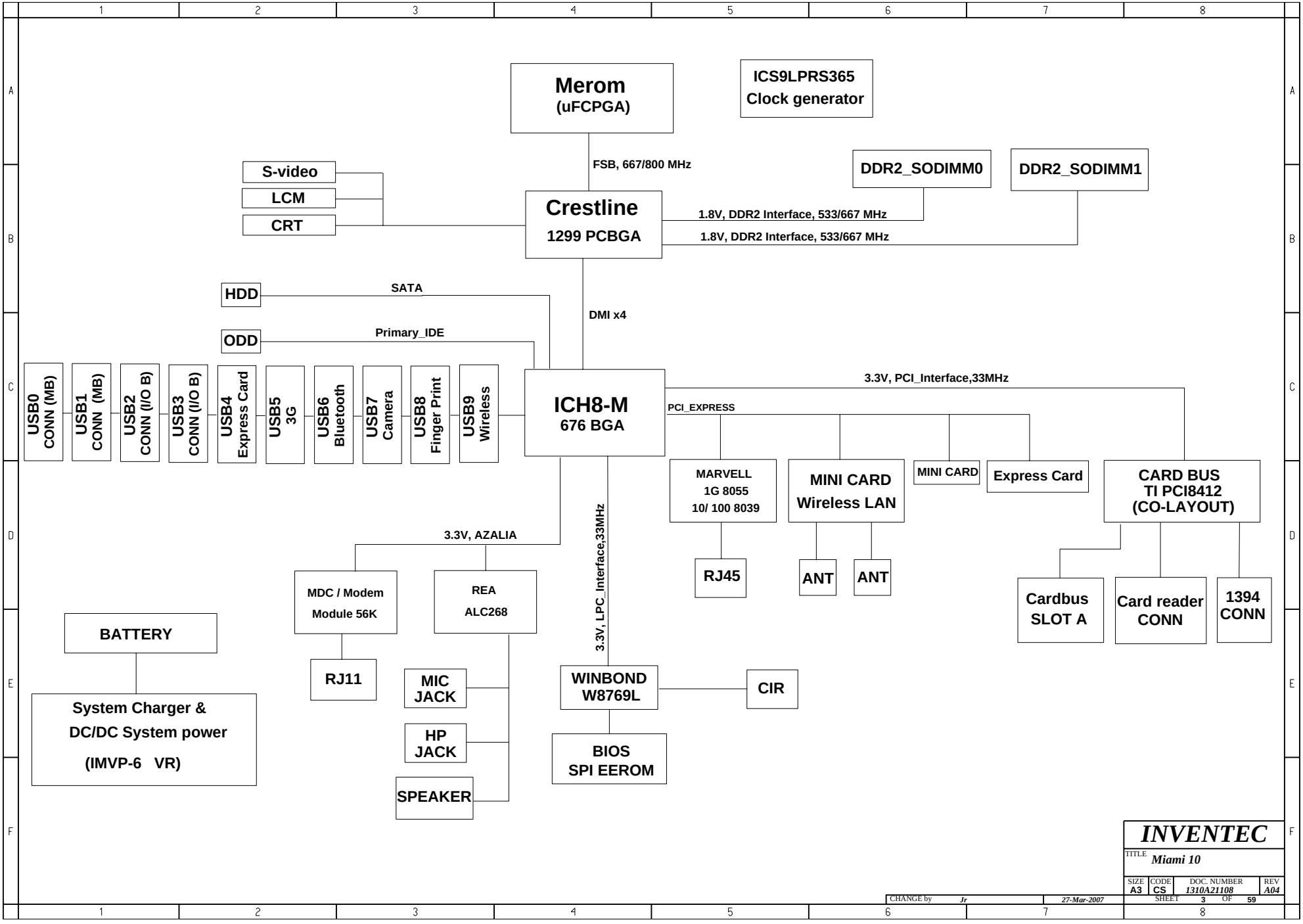
Merom
(uFCPGA)
ICS9LPRS365
Clock generator
FSB, 667/800 MHz
S-video
LCM
CRT
Crestline
1299 PCBGA
DDR2_SODIMM0
DDR2_SODIMM1
1.8V, DDR2 Interface, 533/667 MHz
1.8V, DDR2 Interface, 533/667 MHz
HDD
SATA
ODD
Primary_IDE
DMI x4
USB0 CONN (MB)
USB1 CONN (MB)
USB2 CONN (I/O B)
USB3 CONN (I/O B)
USB4 Express Card
USB5 3G
USB6 Bluetooth
USB7 Camera
USB8 Finger Print
USB9 Wireless
ICH8-M
676 BGA
3.3V, PCI_Interface,33MHz
PCI_EXPRESS
MARVELL
1G 8055
10/ 100 8039
MINI CARD
Wireless LAN
MINI CARD
Express Card
CARD BUS
TI PCI8412
(CO-LAYOUT)
RJ45
ANT
ANT
Cardbus
SLOT A
Card reader
CONN
1394
CONN
3.3V, AZALIA
3.3V, LPC_Interface,33MHz
MDC / Modem
Module 56K
REA
ALC268
RJ11
MIC
JACK
HP
JACK
SPEAKER
WINBOND
W8769L
CIR
BIOS
SPI EEROM
BATTERY
System Charger &
DC/DC System power
(IMVP-6 VR)
INVENTEC
TITLE Miami 10
SIZE A3
CODE CS
DOC. NUMBER 1310A21108
REV A04
SHEET 3 OF 59
CHANGE by Jr
27-Mar-2007

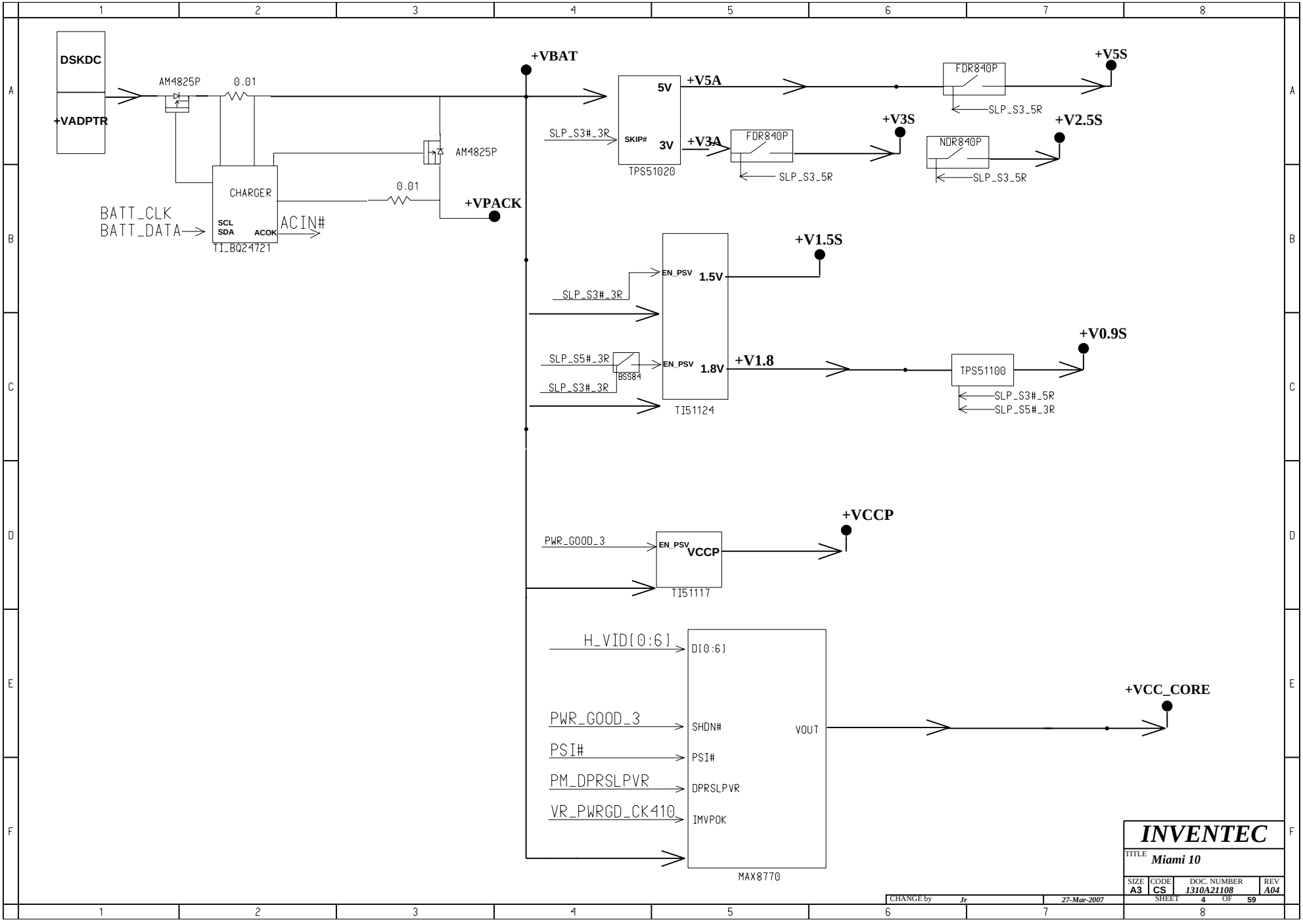
DSKDC
+VADPTR
AM4825P
0.01
AM4825P
CHARGER
SCL
SDA
ACOK
TI_BQ24721
BATT_CLK
BATT_DATA
ACIN#
0.01
+VPACK
+VBAT
5V
SKIP#
3V
TPS51020
SLP_S3#_3R
+V5A
+V3A
FDR840P
SLP_S3_5R
+V5S
+V3S
FDR840P
SLP_S3_5R
+V2.5S
NDR840P
SLP_S3_5R
EN_PSV
1.5V
+V1.5S
SLP_S3#_3R
SLP_S5#_3R
BSS84
SLP_S3#_3R
EN_PSV
1.8V
+V1.8
TI51124
TPS51100
+V0.9S
SLP_S3#_5R
SLP_S5#_3R
PWR_GOOD_3
EN_PSV
VCCP
TI51117
+VCCP
H_VID[0:6]
D[0:6]
PWR_GOOD_3
SHDN#
PSI#
PSI#
PM_DPRSLPVR
DPRSLPVR
VR_PWRGD_CK410
IMVPOK
VOUT
MAX8770
+VCC_CORE
INVENTEC
TITLE Miami 10
SIZE A3
CODE CS
DOC. NUMBER 1310A21108
REV A04
SHEET 4 OF 59
CHANGE by Jr
27-Mar-2007

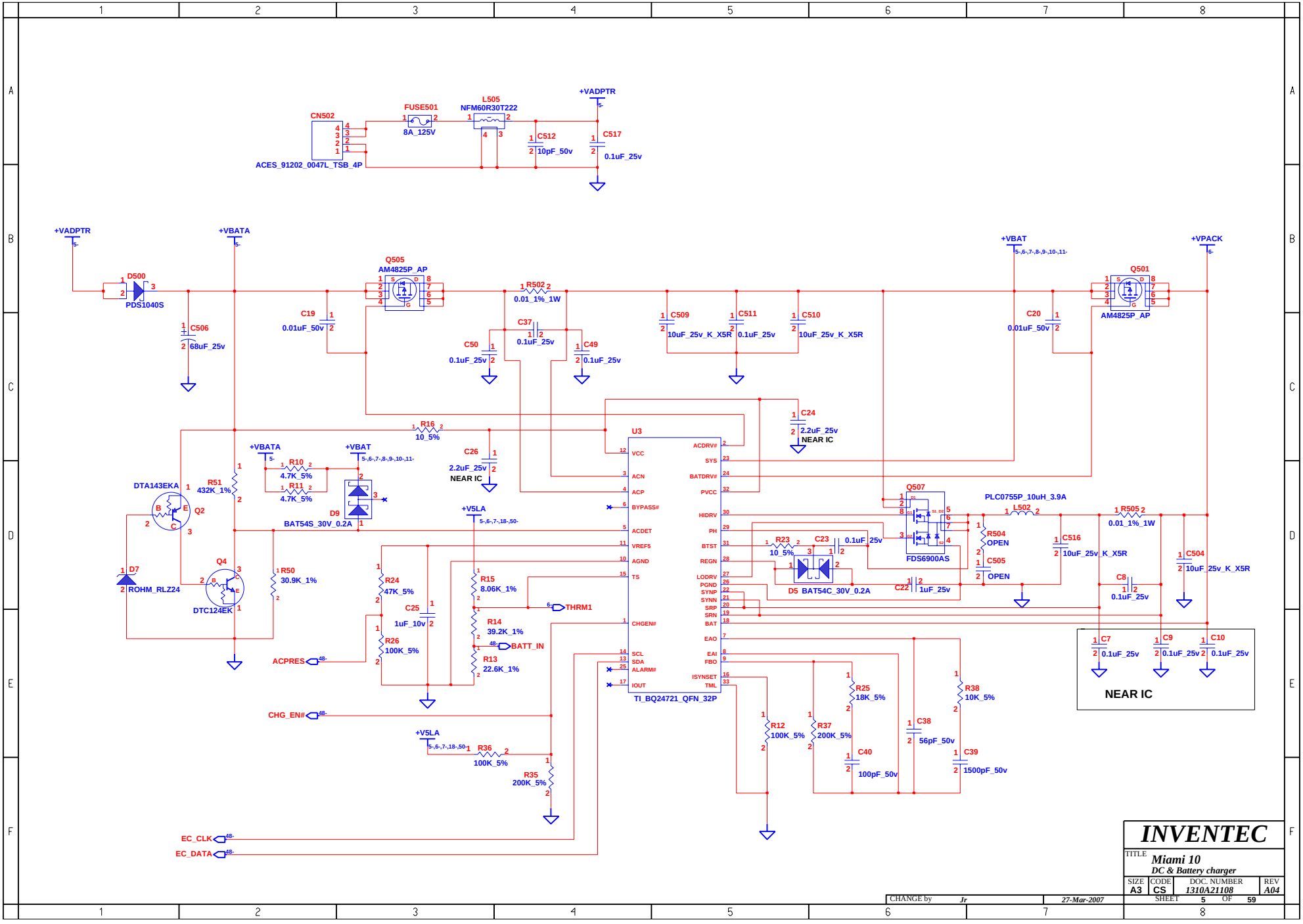
CN502
ACES_91202_0047L_TSB_4P
FUSE501
8A_125V
L505
NFM60R30T222
+VADPTR
C512
10pF_50v
C517
0.1uF_25v
+VADPTR
+VBATA
D500
PDS1040S
C506
68uF_25v
Q505
AM4825P_AP
C19
0.01uF_50v
R502
0.01_1%_1W
C37
0.1uF_25v
C50
0.1uF_25v
C49
0.1uF_25v
C509
10uF_25v_K_X5R
C511
0.1uF_25v
C510
10uF_25v_K_X5R
+VBAT
C20
0.01uF_50v
Q501
AM4825P_AP
+VPACK
C24
2.2uF_25v
NEAR IC
R16
10_5%
U3
VCC
ACN
ACP
BYPASS#
ACDET
VREF5
AGND
TS
CHGEN#
SCL
SDA
ALARM#
IOUT
ACDRV#
SYS
BATDRV#
PVCC
HIDRV
PH
BTST
REGN
LODRV
PGND
SYNP
SYNN
SRP
SRN
BAT
EAO
EAI
FBO
ISYNSET
TML
TI_BQ24721_QFN_32P
+VBATA
R10
4.7K_5%
+VBAT
R11
4.7K_5%
D9
BAT54S_30V_0.2A
C26
2.2uF_25v
NEAR IC
DTA143EKA
Q2
R51
432K_1%
D7
ROHM_RLZ24
Q4
DTC124EK
R50
30.9K_1%
+V5LA
R24
47K_5%
R26
100K_5%
C25
1uF_10v
R15
8.06K_1%
R14
39.2K_1%
R13
22.6K_1%
THRM1
BATT_IN
ACPRES
CHG_EN#
+V5LA
R36
100K_5%
R35
200K_5%
EC_CLK
EC_DATA
Q507
FDS6900AS
R23
10_5%
C23
0.1uF_25v
D5
BAT54C_30V_0.2A
C22
1uF_25v
PLC0755P_10uH_3.9A
L502
R504
OPEN
C505
OPEN
C516
10uF_25v_K_X5R
R505
0.01_1%_1W
C504
10uF_25v_K_X5R
C8
0.1uF_25v
C7
0.1uF_25v
C9
0.1uF_25v
C10
0.1uF_25v
NEAR IC
R12
100K_5%
R37
200K_5%
R25
18K_5%
C40
100pF_50v
C38
56pF_50v
R38
10K_5%
C39
1500pF_50v
INVENTEC
TITLE
Miami 10
DC & Battery charger
SIZE A3
CODE CS
DOC. NUMBER 1310A21108
REV A04
SHEET 5 OF 59
CHANGE by Jr
27-Mar-2007

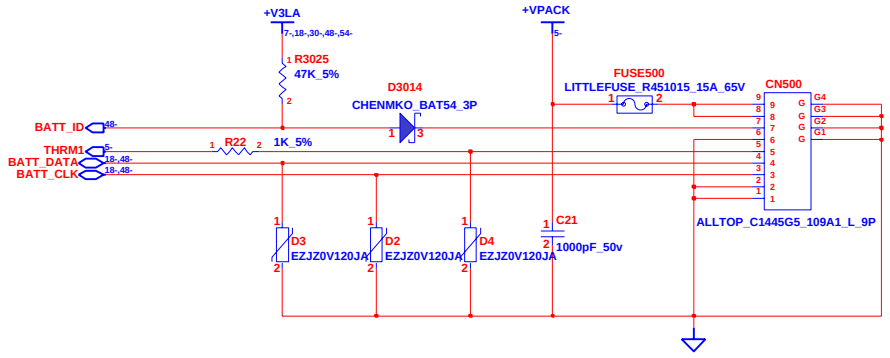

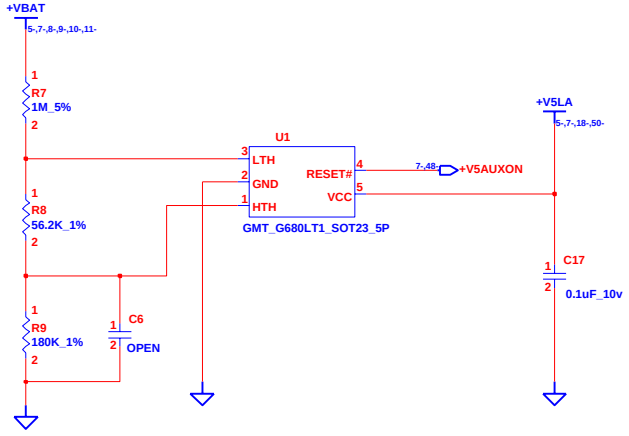

CHANGE by	Jr	27-Mar-2007	

INVENTEC

TITLE *Miami 10*
BATTERY CONN

SIZE	CODE	DOC. NUMBER	REV
A3	CS	1310A21108	A04

SHEET 6 OF 59

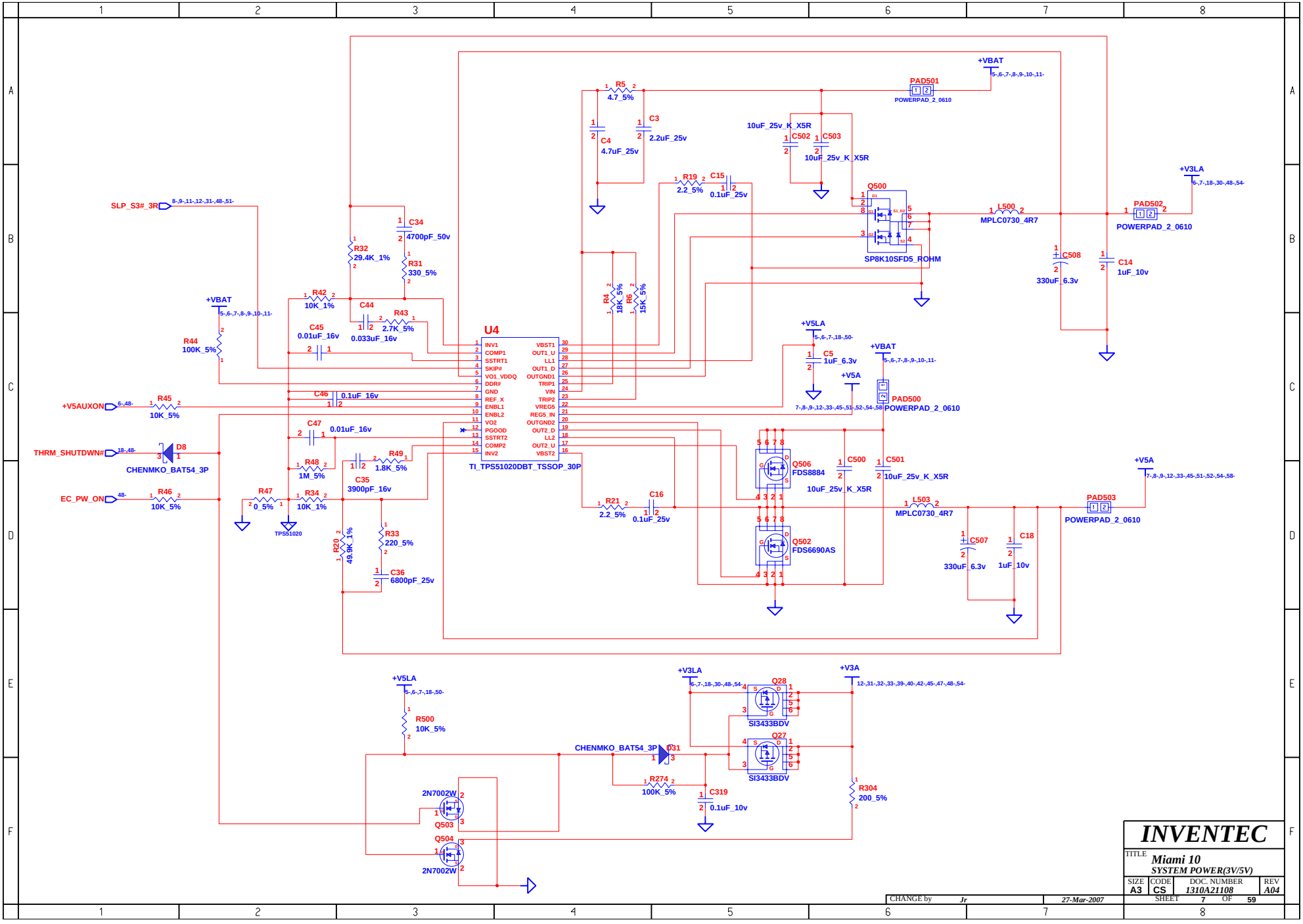
U4
TI_TPS51020DBT_TSSOP_30P
INV1
COMP1
SSTRT1
SKIP#
VO1_VDDQ
DDR#
GND
REF_X
ENBL1
ENBL2
VO2
PGOOD
SSTRT2
COMP2
INV2
VBST1
OUT1_U
LL1
OUT1_D
OUTGND1
TRIP1
VIN
TRIP2
VREG5
REG5_IN
OUTGND2
OUT2_D
LL2
OUT2_U
VBST2
SLP_S3#_3R
+VBAT
+V3LA
+V5LA
+V5A
+V3A
+V5AUXON
THRM_SHUTDWN#
EC_PW_ON
PAD501
PAD502
PAD500
PAD503
POWERPAD_2_0610
Q500
SP8K10SFD5_ROHM
L500
MPLC0730_4R7
L503
MPLC0730_4R7
Q506
FDS8884
Q502
FDS6690AS
Q28
SI3433BDV
Q27
SI3433BDV
Q503
2N7002W
Q504
2N7002W
D8
CHENMKO_BAT54_3P
D31
CHENMKO_BAT54_3P
TPS51020
R5 4.7_5%
C4 4.7uF_25v
C3 2.2uF_25v
C502 10uF_25v_K_X5R
C503 10uF_25v_K_X5R
R19 2.2_5%
C15 0.1uF_25v
C34 4700pF_50v
R32 29.4K_1%
R31 330_5%
R42 10K_1%
C44 0.033uF_16v
R43 2.7K_5%
C45 0.01uF_16v
R44 100K_5%
R4 18K_5%
R6 15K_5%
C5 1uF_6.3v
C508 330uF_6.3v
C14 1uF_10v
R45 10K_5%
C46 0.1uF_16v
C47 0.01uF_16v
R48 1M_5%
R49 1.8K_5%
C35 3900pF_16v
R46 10K_5%
R47 0_5%
R34 10K_1%
R20 49.9K_1%
R33 220_5%
C36 6800pF_25v
R21 2.2_5%
C16 0.1uF_25v
C500 10uF_25v_K_X5R
C501 10uF_25v_K_X5R
C507 330uF_6.3v
C18 1uF_10v
R500 10K_5%
R274 100K_5%
C319 0.1uF_10v
R304 200_5%
INVENTEC
TITLE
Miami 10
SYSTEM POWER(3V/5V)
SIZE A3
CODE CS
DOC. NUMBER 1310A21108
REV A04
SHEET 7 OF 59
CHANGE by Jr
27-Mar-2007

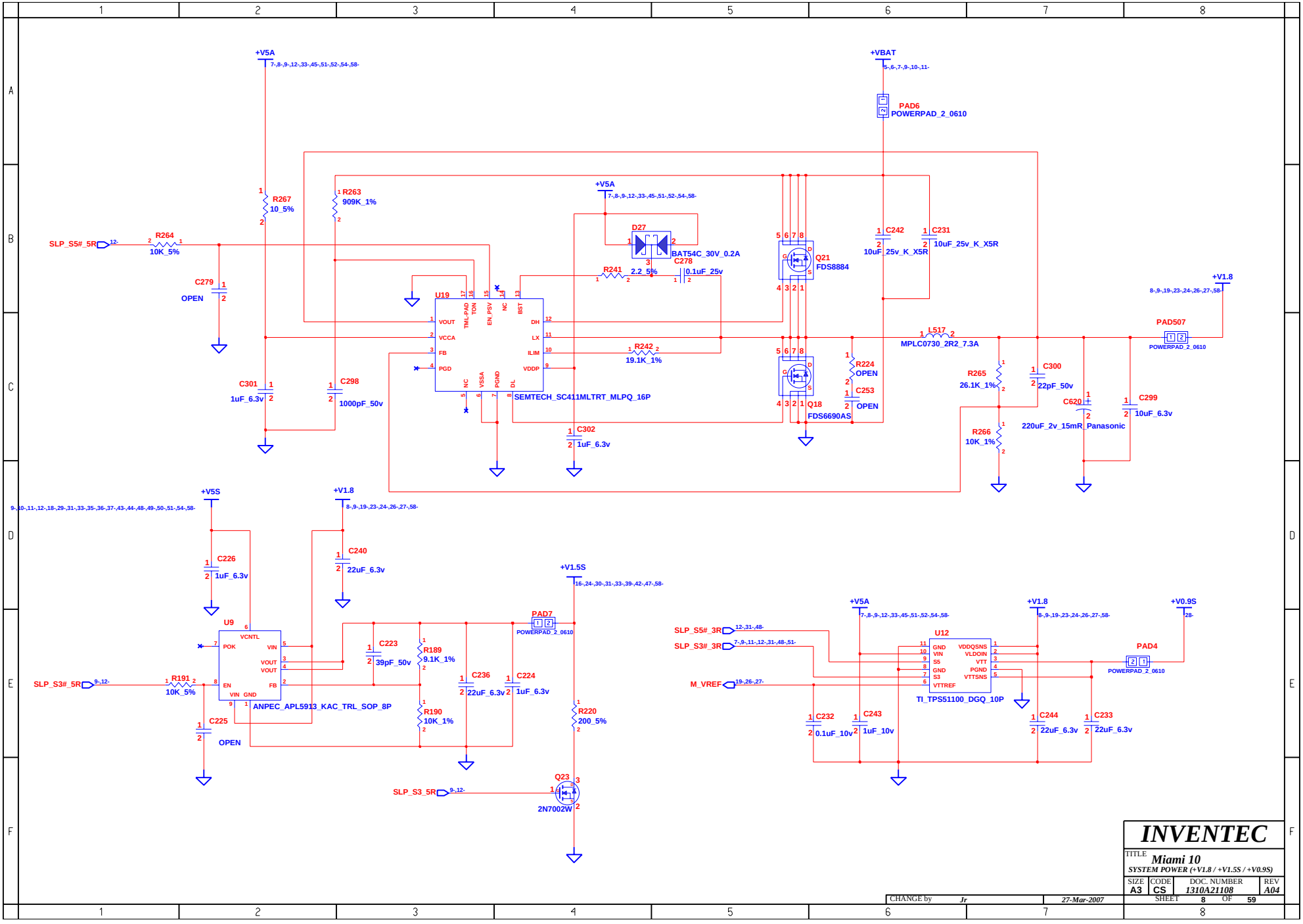
+V5A
7-,8-,9-,12-,33-,45-,51-,52-,54-,58-
+VBAT
5-,6-,7-,9-,10-,11-
PAD6
POWERPAD_2_0610
R267
10_5%
R263
909K_1%
SLP_S5#_5R
12-
R264
10K_5%
C279
OPEN
D27
BAT54C_30V_0.2A
C278
0.1uF_25v
R241
2.2_5%
Q21
FDS8884
C242
10uF_25v_K_X5R
C231
10uF_25v_K_X5R
U19
VOUT
VCCA
FB
PGD
TML-PAD
TON
EN_PSV
NC
BST
DH
LX
ILIM
VDDP
NC
VSSA
PGND
DL
SEMTECH_SC411MLTRT_MLPQ_16P
R242
19.1K_1%
+V1.8
8-,9-,19-,23-,24-,26-,27-,58-
PAD507
POWERPAD_2_0610
L517
MPLC0730_2R2_7.3A
R224
OPEN
C253
OPEN
Q18
FDS6690AS
C301
1uF_6.3v
C298
1000pF_50v
C302
1uF_6.3v
R265
26.1K_1%
C300
22pF_50v
C620
220uF_2v_15mR_Panasonic
C299
10uF_6.3v
R266
10K_1%
+V5S
9-,10-,11-,12-,18-,29-,31-,33-,35-,36-,37-,43-,44-,48-,49-,50-,51-,54-,58-
C226
1uF_6.3v
C240
22uF_6.3v
+V1.5S
16-,24-,30-,31-,33-,39-,42-,47-,58-
U9
VCNTL
POK
VIN
VOUT
VOUT
EN
VIN
GND
FB
ANPEC_APL5913_KAC_TRL_SOP_8P
SLP_S3#_5R
9-,12-
R191
10K_5%
C225
OPEN
C223
39pF_50v
R189
9.1K_1%
R190
10K_1%
C236
22uF_6.3v
C224
1uF_6.3v
PAD7
POWERPAD_2_0610
R220
200_5%
Q23
2N7002W
SLP_S3_5R
9-,12-
+V5A
7-,8-,9-,12-,33-,45-,51-,52-,54-,58-
+V1.8
8-,9-,19-,23-,24-,26-,27-,58-
+V0.9S
28-
SLP_S5#_3R
12-,31-,48-
SLP_S3#_3R
7-,9-,11-,12-,31-,48-,51-
M_VREF
19-,26-,27-
U12
GND
VIN
S5
GND
S3
VTTREF
VDDQSNS
VLDOIN
VTT
PGND
VTTSNS
TI_TPS51100_DGQ_10P
PAD4
POWERPAD_2_0610
C232
0.1uF_10v
C243
1uF_10v
C244
22uF_6.3v
C233
22uF_6.3v
INVENTEC
TITLE
Miami 10
SYSTEM POWER (+V1.8 / +V1.5S / +V0.9S)
SIZE A3
CODE CS
DOC. NUMBER 1310A21108
REV A04
SHEET 8 OF 59
CHANGE by Jr
27-Mar-2007

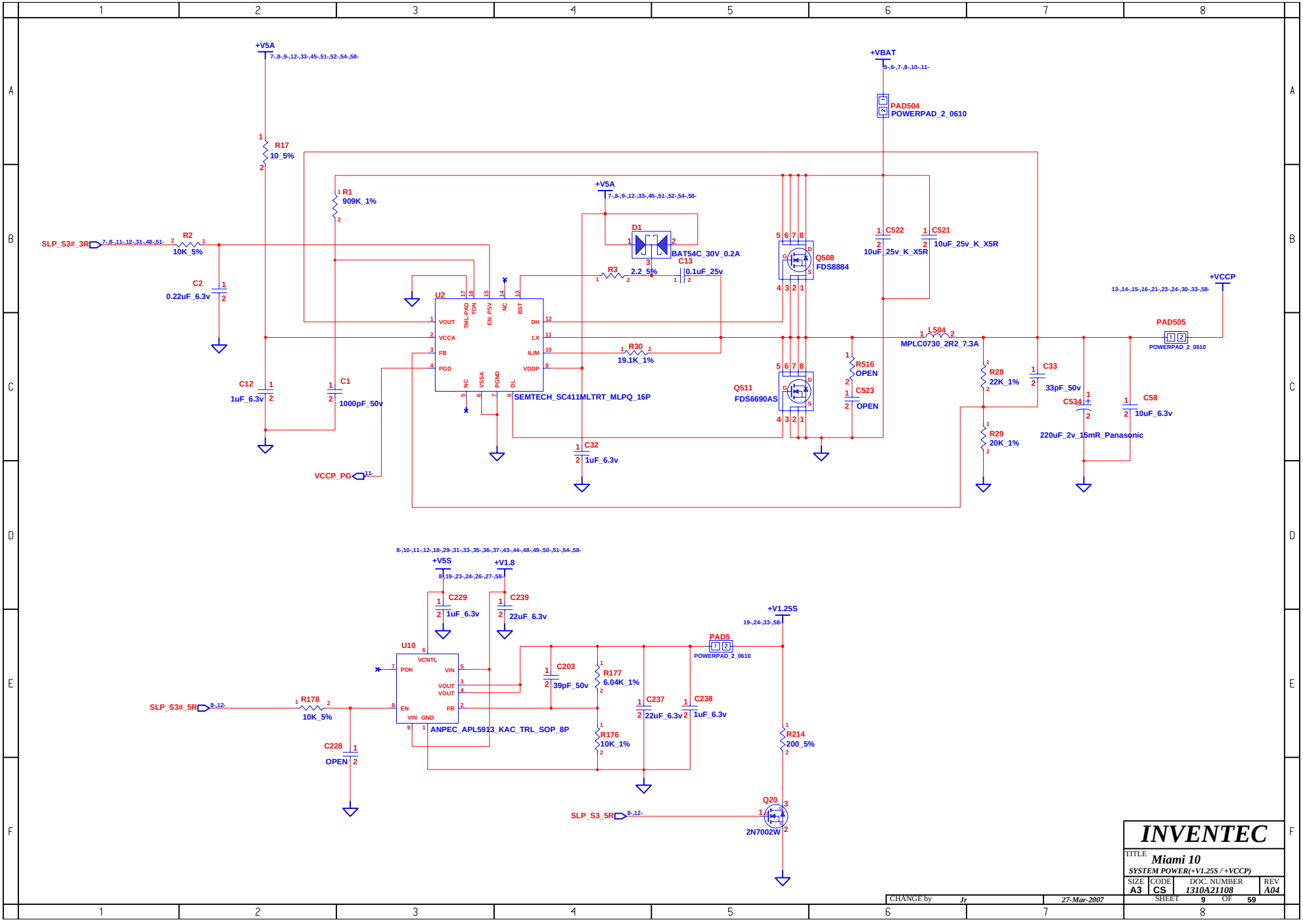
+V5A
7-,8-,9-,12-,33-,45-,51-,52-,54-,58-
+VBAT
5-,6-,7-,8-,10-,11-
PAD504
POWERPAD_2_0610
R17
10_5%
R1
909K_1%
SLP_S3#_3R
7-,8-,11-,12-,31-,48-,51-
R2
10K_5%
C2
0.22uF_6.3v
D1
BAT54C_30V_0.2A
C13
0.1uF_25v
R3
2.2_5%
Q508
FDS8884
C522
10uF_25v_K_X5R
C521
10uF_25v_K_X5R
+VCCP
13-,14-,15-,16-,21-,23-,24-,30-,33-,58-
U2
VOUT
VCCA
FB
PGD
TWL-PAD
TON
EN_PSV
NC
BST
DH
LX
ILIM
VDDP
NC
VSSA
PGND
DL
SEMTECH_SC411MLTRT_MLPQ_16P
R30
19.1K_1%
L504
MPLC0730_2R2_7.3A
PAD505
POWERPAD_2_0610
R516
OPEN
Q511
FDS6690AS
C523
OPEN
R28
22K_1%
C33
33pF_50v
C534
220uF_2v_15mR_Panasonic
C58
10uF_6.3v
R29
20K_1%
C12
1uF_6.3v
C1
1000pF_50v
C32
1uF_6.3v
VCCP_PG
11-
8-,10-,11-,12-,18-,29-,31-,33-,35-,36-,37-,43-,44-,48-,49-,50-,51-,54-,58-
+V5S
8-,19-,23-,24-,26-,27-,58-
+V1.8
C229
1uF_6.3v
C239
22uF_6.3v
+V1.25S
19-,24-,33-,58-
PAD5
POWERPAD_2_0610
U10
VCNTL
POK
VIN
VOUT
VOUT
EN
FB
VIN
GND
ANPEC_APL5913_KAC_TRL_SOP_8P
C203
39pF_50v
R177
6.04K_1%
C237
22uF_6.3v
C238
1uF_6.3v
R176
10K_1%
R214
200_5%
SLP_S3#_5R
8-,12-
R178
10K_5%
C228
OPEN
Q20
2N7002W
SLP_S3_5R
8-,12-
INVENTEC
TITLE
Miami 10
SYSTEM POWER(+V1.25S / +VCCP)
SIZE A3
CODE CS
DOC. NUMBER 1310A21108
REV A04
SHEET 9 OF 59
CHANGE by Jr
27-Mar-2007

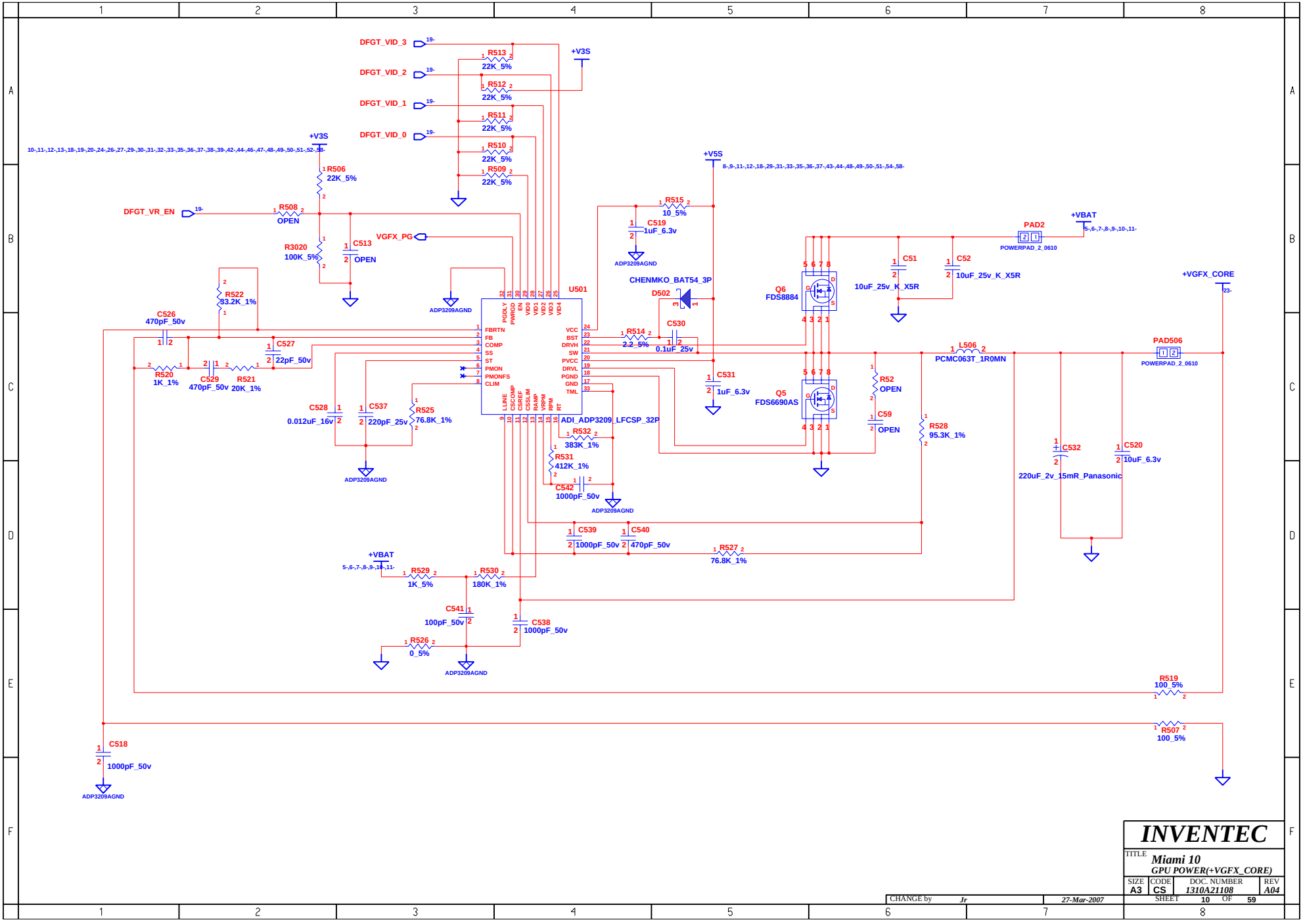

CHANGE by	Jr	27-Mar-2007	

INVENTEC

TITLE *Miami 10*
GPU POWER(+VGFX_CORE)

SIZE	CODE	DOC. NUMBER	REV
A3	CS	1310A21108	A04

SHEET 10 OF 59

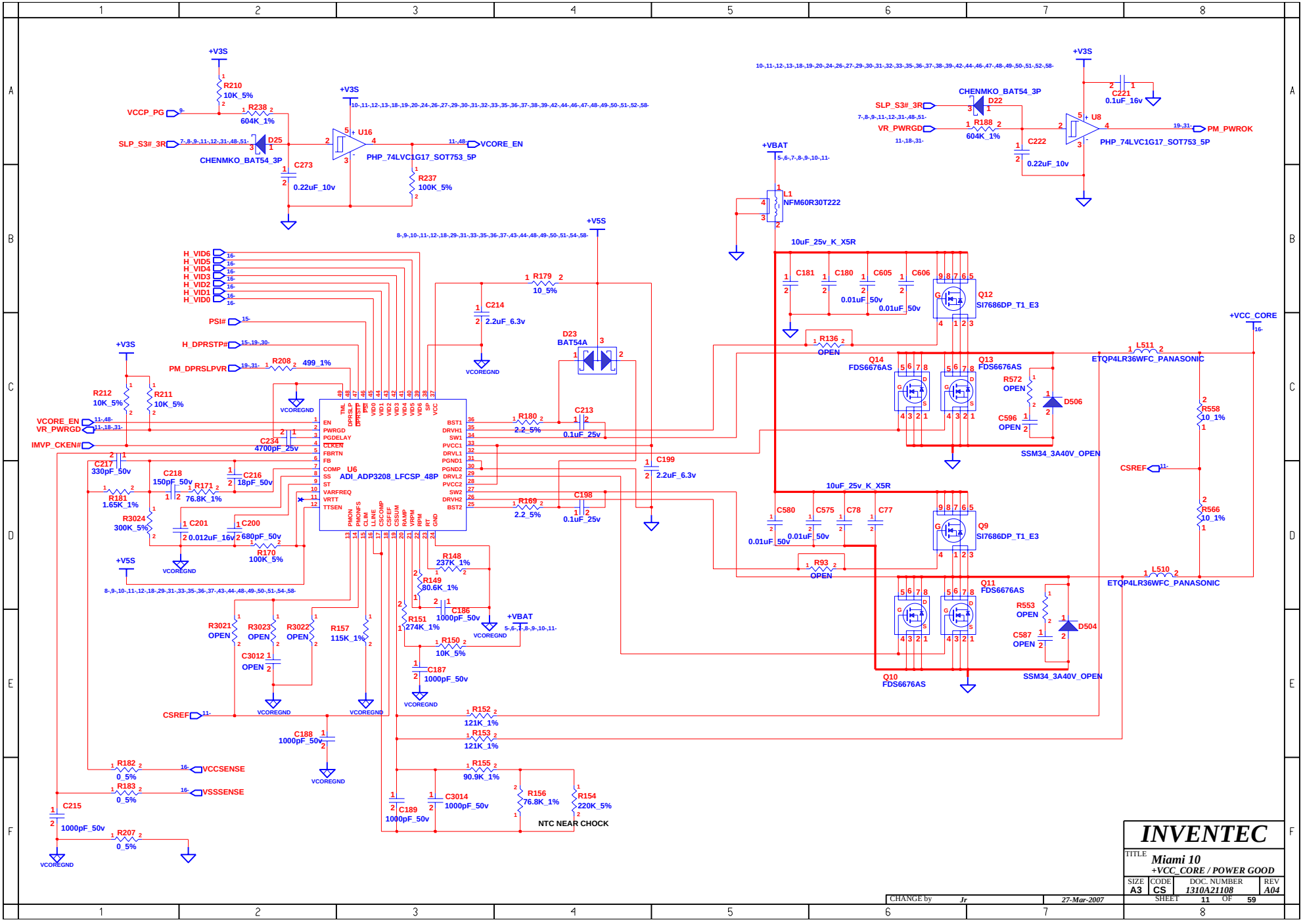
+V3S
R210
10K_5%
VCCP_PG
R238
604K_1%
SLP_S3#_3R
D25
CHENMKO_BAT54_3P
C273
0.22uF_10v
U16
PHP_74LVC1G17_SOT753_5P
VCORE_EN
R237
100K_5%
+V5S
R179
10_5%
C214
2.2uF_6.3v
VCOREGND
D23
BAT54A
H_VID6
H_VID5
H_VID4
H_VID3
H_VID2
H_VID1
H_VID0
PSI#
H_DPRSTP#
PM_DPRSLPVR
R208
499_1%
R212
10K_5%
R211
10K_5%
VCORE_EN
VR_PWRGD
IMVP_CKEN#
C234
4700pF_25v
C217
330pF_50v
C218
150pF_50v
R171
76.8K_1%
C216
18pF_50v
R181
1.65K_1%
R3024
300K_5%
C201
0.012uF_16v
C200
680pF_50v
R170
100K_5%
U6
ADI_ADP3208_LFCSP_48P
EN
PWRGD
PGDELAY
CLKEN
FBRTN
FB
COMP
SS
ST
VARFREQ
VRTT
TTSEN
TML
DPRSLP
DPRSTP
PSI
VID0
VID1
VID2
VID3
VID4
VID5
VID6
SP
VCC
BST1
DRVH1
SW1
PVCC1
DRVL1
PGND1
PGND2
DRVL2
PVCC2
SW2
DRVH2
BST2
PMON
PMONFS
CLM
LLINE
CCOMP
CSFEF
CSSUM
RAMP
VRPM
RPM
RT
GND
R180
2.2_5%
C213
0.1uF_25v
C199
2.2uF_6.3v
R169
2.2_5%
C198
0.1uF_25v
R148
237K_1%
R149
80.6K_1%
C186
1000pF_50v
R151
274K_1%
R150
10K_5%
C187
1000pF_50v
R3021
OPEN
R3023
OPEN
R3022
OPEN
R157
115K_1%
C3012
OPEN
CSREF
C188
1000pF_50v
R152
121K_1%
R153
121K_1%
R155
90.9K_1%
R156
76.8K_1%
R154
220K_5%
NTC NEAR CHOCK
C3014
1000pF_50v
C189
1000pF_50v
R182
0_5%
VCCSENSE
R183
0_5%
VSSSENSE
C215
1000pF_50v
R207
0_5%
+VBAT
L1
NFM60R30T222
10uF_25v_K_X5R
C181
C180
C605
C606
0.01uF_50v
Q12
SI7686DP_T1_E3
R136
OPEN
Q14
FDS6676AS
Q13
FDS6676AS
R572
OPEN
D506
C596
OPEN
SSM34_3A40V_OPEN
L511
ETQP4LR36WFC_PANASONIC
+VCC_CORE
R558
10_1%
R566
10_1%
C580
C575
C78
C77
Q9
SI7686DP_T1_E3
R93
OPEN
Q11
FDS6676AS
R553
OPEN
D504
C587
OPEN
Q10
FDS6676AS
L510
ETQP4LR36WFC_PANASONIC
CHENMKO_BAT54_3P
D22
SLP_S3#_3R
VR_PWRGD
R188
604K_1%
C222
0.22uF_10v
U8
PHP_74LVC1G17_SOT753_5P
C221
0.1uF_16v
PM_PWROK
INVENTEC
TITLE
Miami 10
+VCC_CORE / POWER GOOD
SIZE A3
CODE CS
DOC. NUMBER 1310A21108
REV A04
SHEET 11 OF 59
CHANGE by Jr
27-Mar-2007

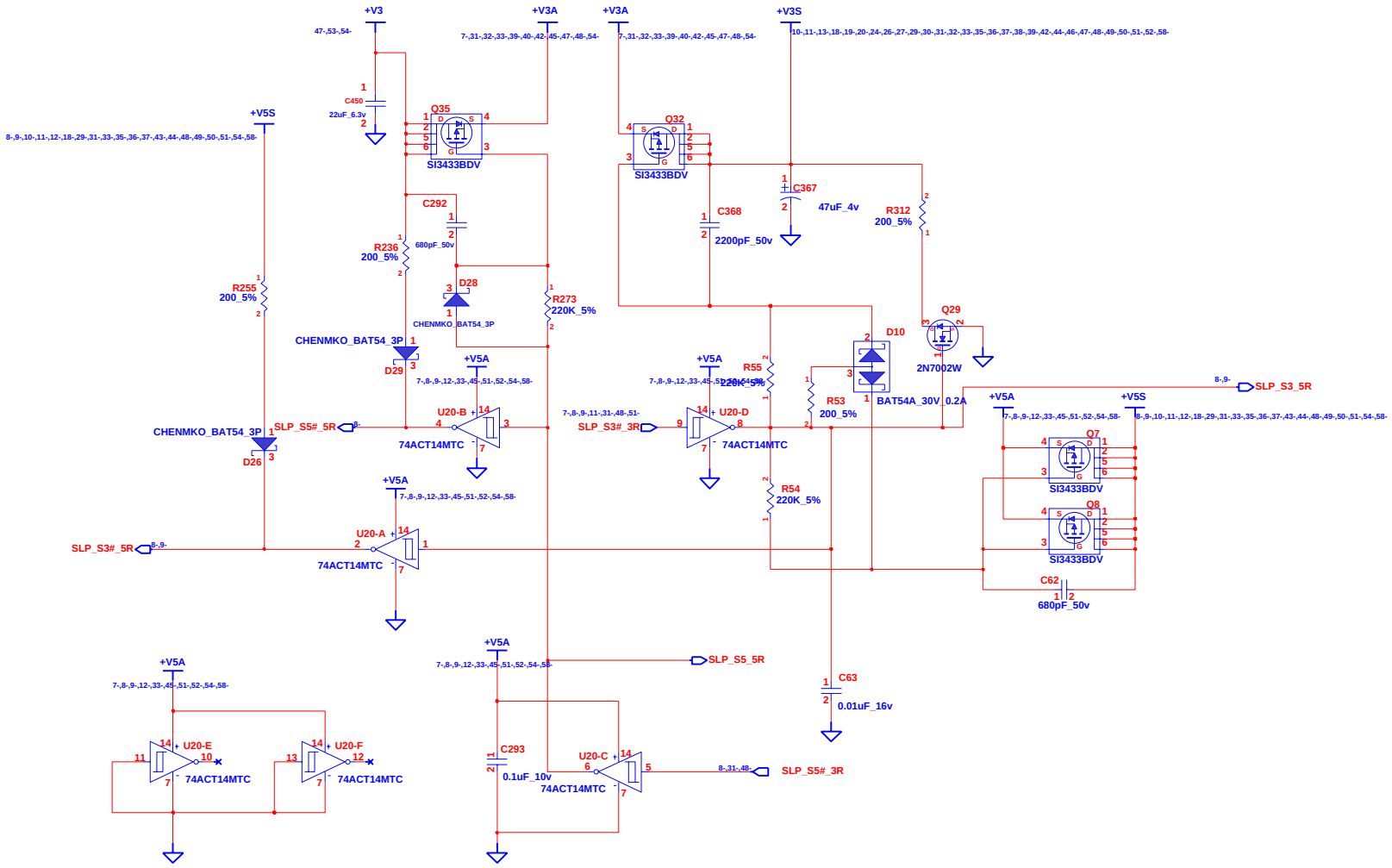

INVENTEC

TITLE **Miami 10**
POWER(SLEEP)

SIZE	CODE	DOC. NUMBER	REV
A3	CS	1310A21108	A04

SHEET 12 OF 59

CHANGE by Jr 27-Mar-2007

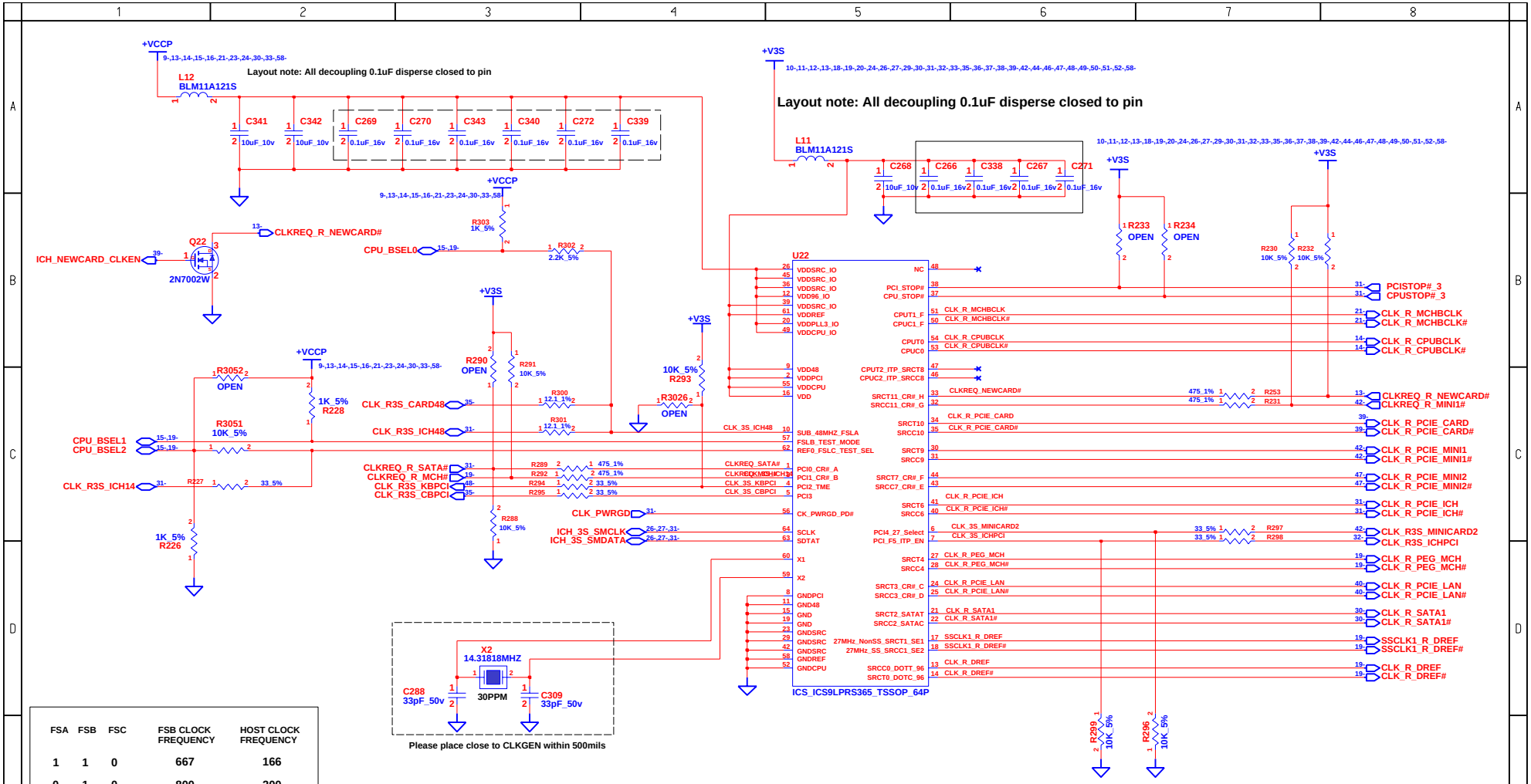

FSA	FSB	FSC	FSB CLOCK FREQUENCY	HOST CLOCK FREQUENCY
1	1	0	667	166
0	1	0	800	200

***CLKREQ# pin controls SRC Table.**

CR#_A	Byte5: bit6 =0(PWD)	Byte5: bit6 =1	CR#_B	Byte5: bit4 =0(PWD)	Byte5: bit4 =1
	SRC0	SRC2		SRC1	SRC4
	Byte5: bit7=0, disable CR#_A; 1,enable CR#_A			Byte5: bit5=0, disable CR#_B; 1,enable CR#_B	

CR#_C	Byte5: bit2 =0(PWD)	Byte5: bit2 =1	CR#_D	Byte5: bit0 =0(PWD)	Byte5: bit0 =1
	SRC0	SRC2		SRC1	SRC4
	Byte5: bit3=0, disable CR#_C; 1,enable CR#_C			Byte5: bit1=0, disable CR#_D; 1,enable CR#_D	

CR#_E	Byte6: bit7=0, disable CR#_E; 1,enable CR#_E
	SRC6
CR#_F	Byte6: bit6=0, disable CR#_F; 1,enable CR#_F
	SRC8
CR#_G	Byte6: bit5=0, disable CR#_G; 1,enable CR#_G
	SRC9
CR#_H	Byte6: bit4=0, disable CR#_H; 1,enable CR#_H
	SRC10

CHANGE by Jr 24-Apr-2007

INVENTEC

TITLE *Miami 10*
CLOCK_GENERATOR

SIZE	CODE	DOC. NUMBER	REV
A3	CS	1310A21108	A04

SHEET 13 OF 59

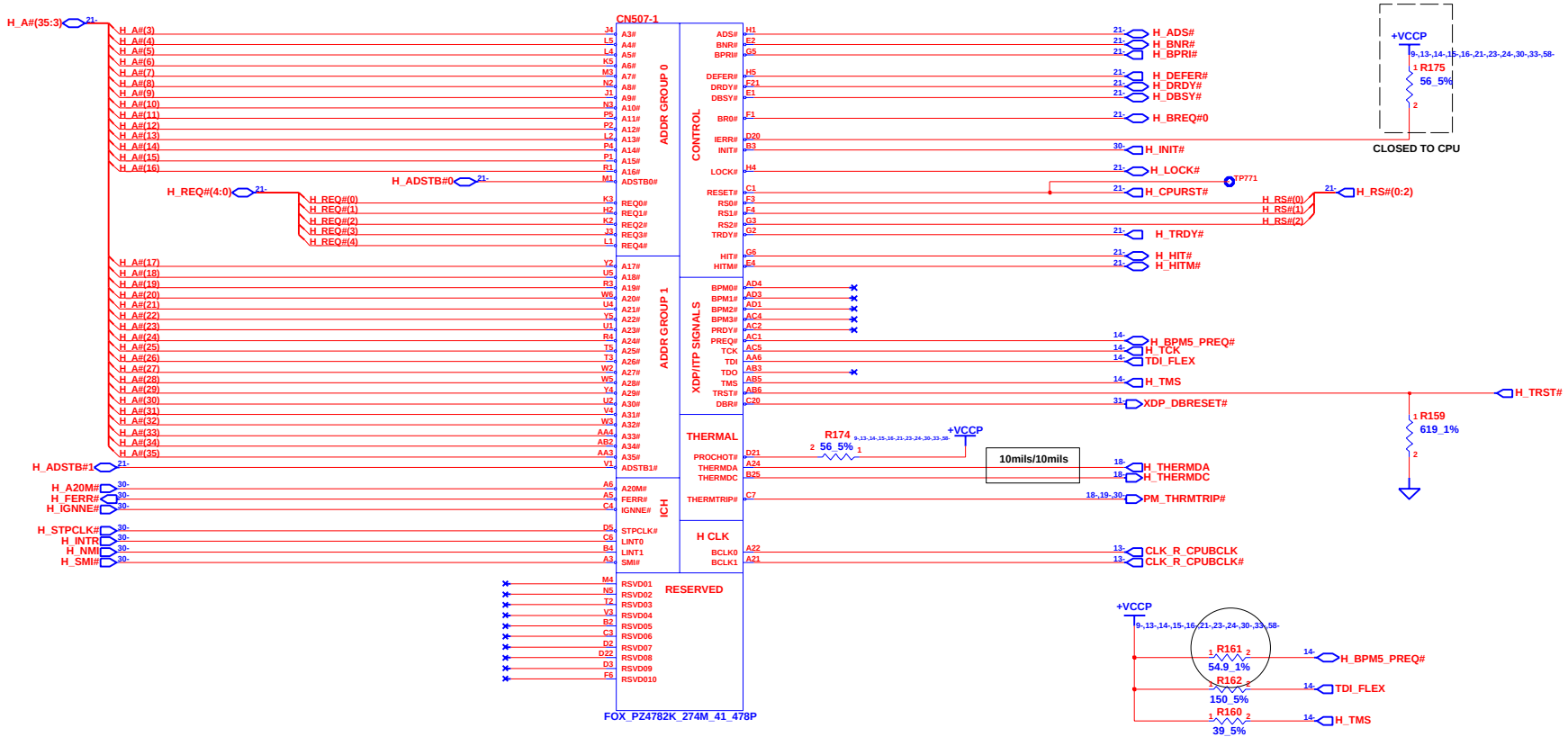

PM_THRMTRIP# should be T at CPU

INVENTEC			
TITLE Miami 10 Yonah-1			
SIZE A3	CODE CS	DOC. NUMBER 1310A21108	REV A04
CHANGE by Jr	27-Mar-2007	SHEET 14 OF 59	

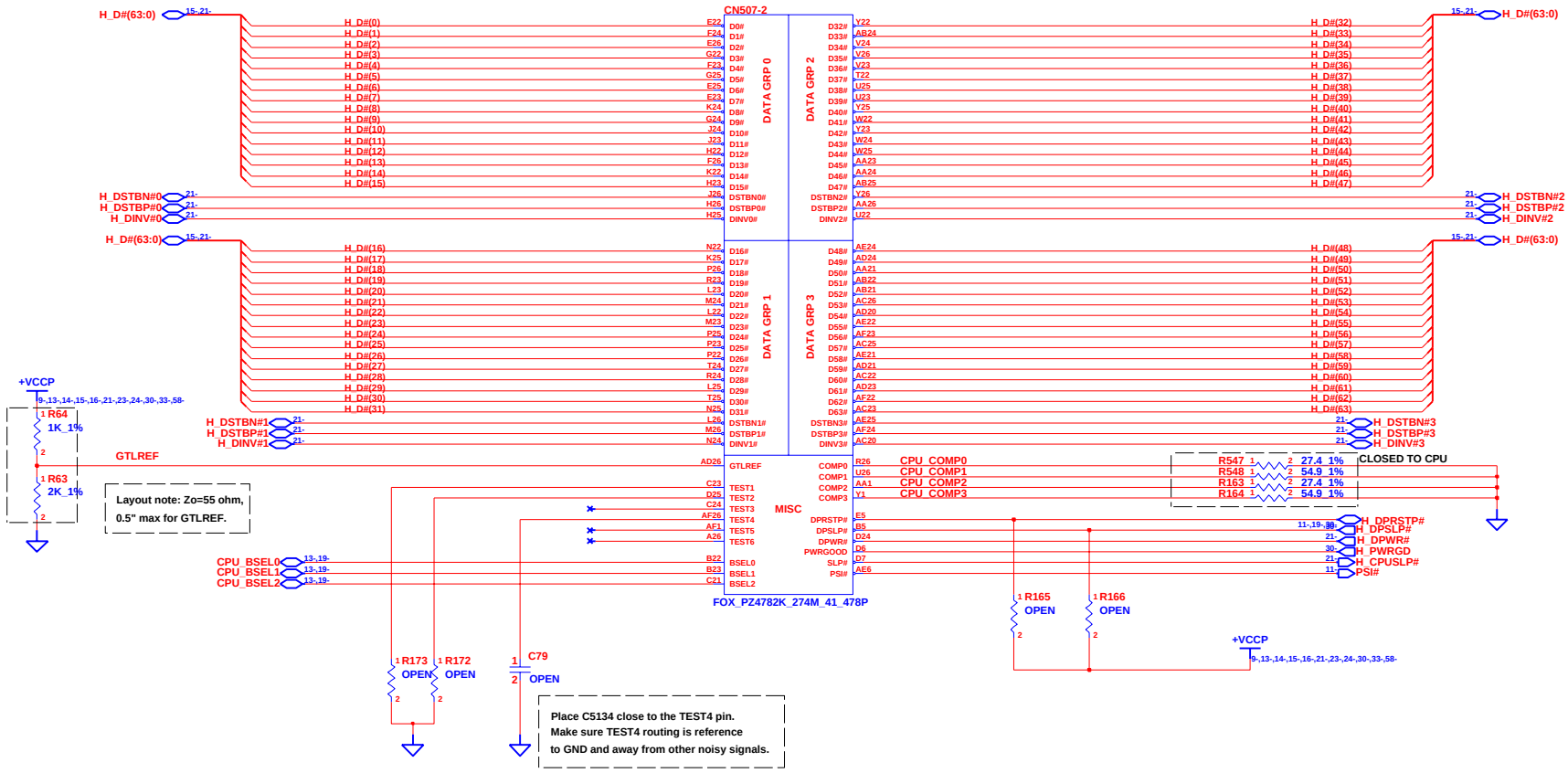

INVENTEC

TITLE Miami 10
Yonah-2

SIZE	CODE	DOC. NUMBER	REV
A3	CS	1310A21108	A04

CHANGE by Jr 24-Apr-2007

SHEET 15 OF 59

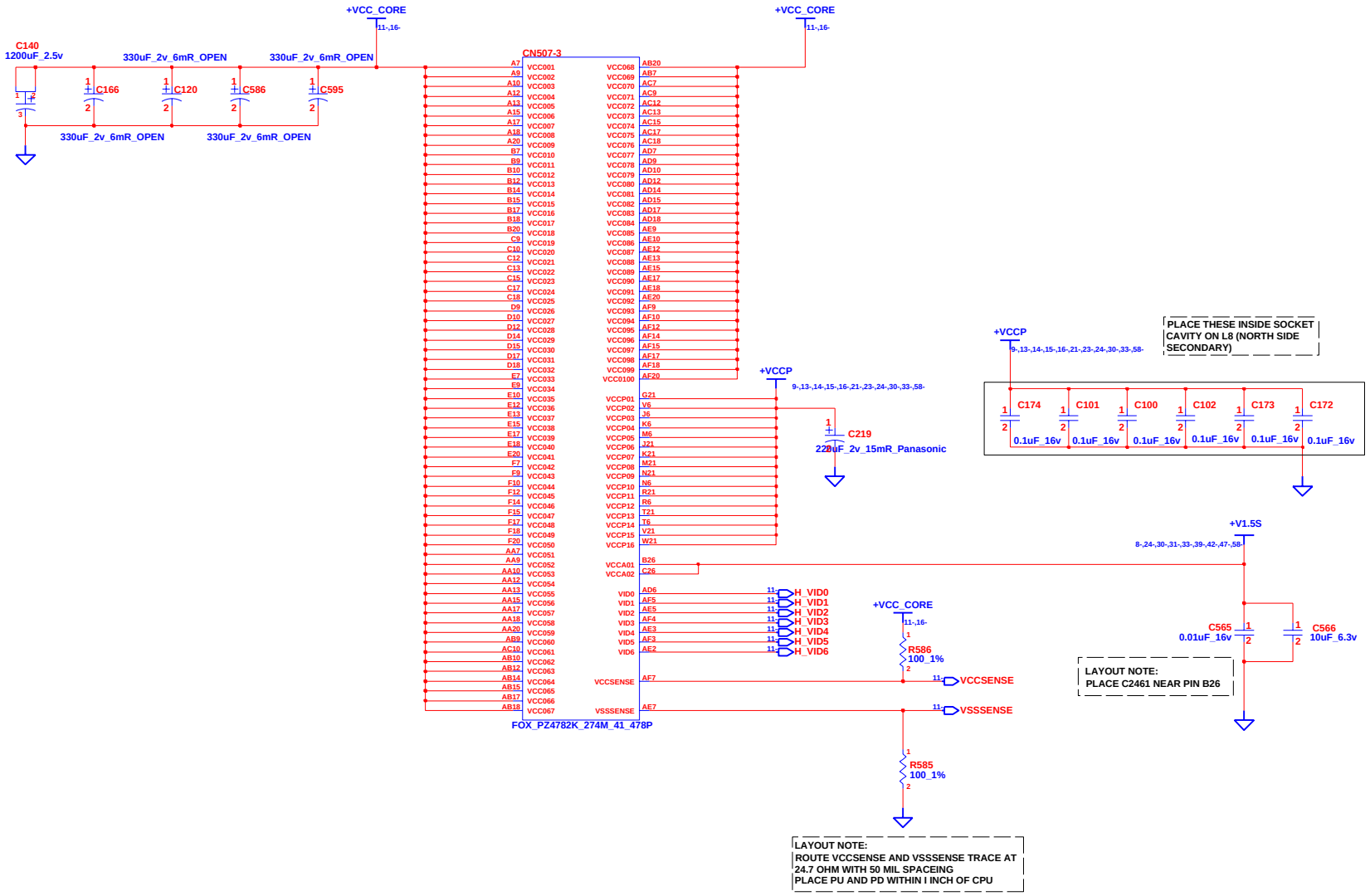

INVENTEC			
TITLE Miami 10 Yonah-3			
SIZE A3	CODE CS	DOC. NUMBER 1310A21108	REV A04
CHANGE by Jr	27-Mar-2007	SHEET 16 OF 59	

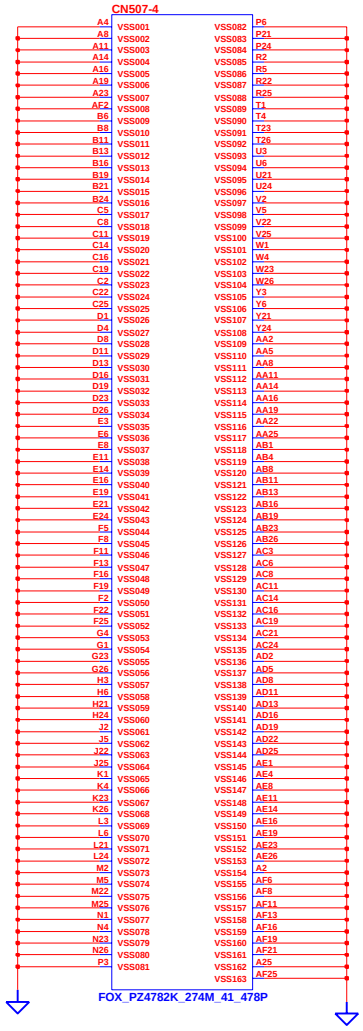

CHANGE by	Jr	27-Mar-2007	

INVENTEC

TITLE *Miami 10*
Yonah-4

SIZE	CODE	DOC. NUMBER	REV
A3	CS	1310A21108	A04

SHEET 17 OF 59

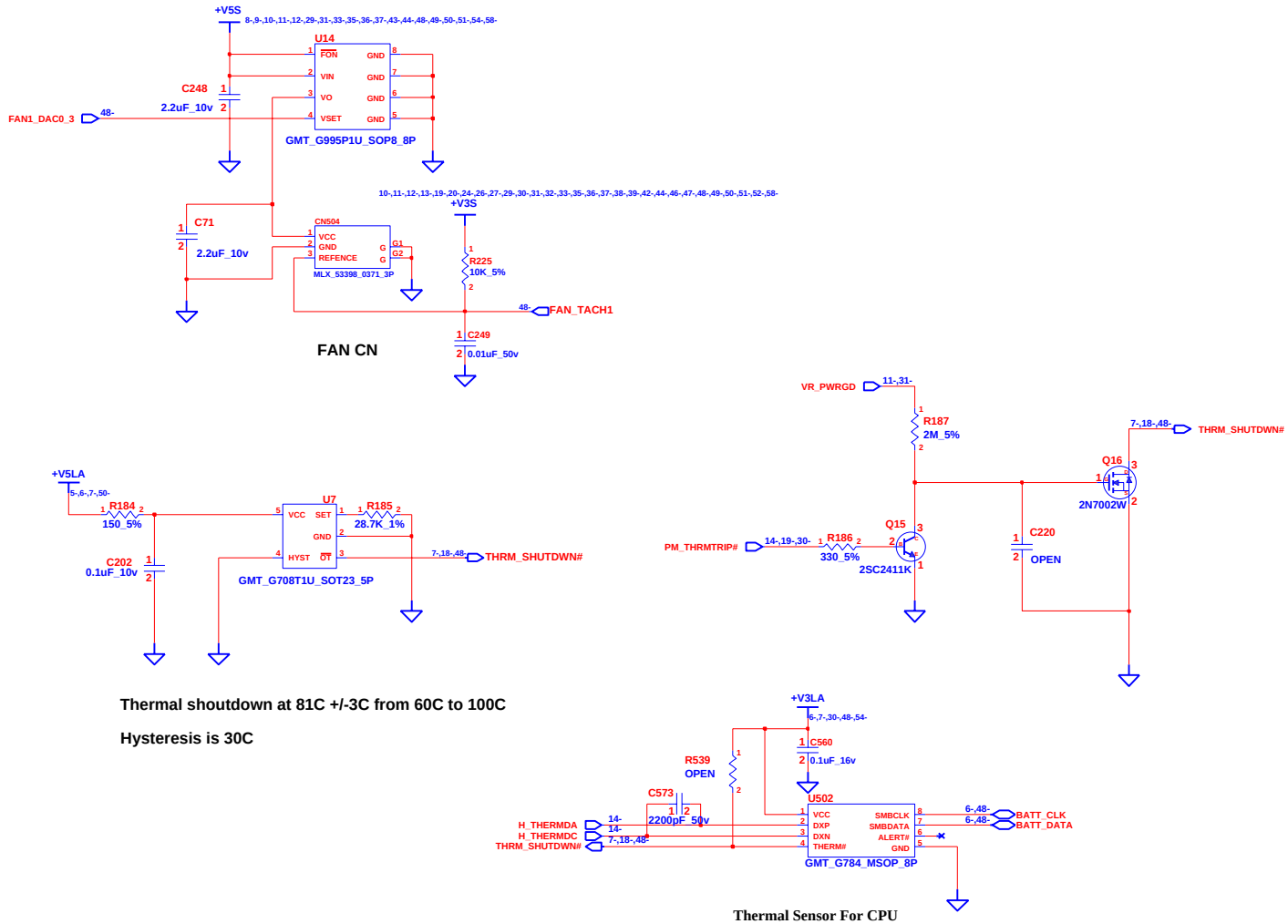

INVENTEC			
TITLE Miami 10 THERMAL&FAN CONTROLLER			
SIZE A3	CODE CS	DOC. NUMBER 1310A21108	REV A04
CHANGE by Jr	27-Mar-2007	SHEET 18 OF 59	

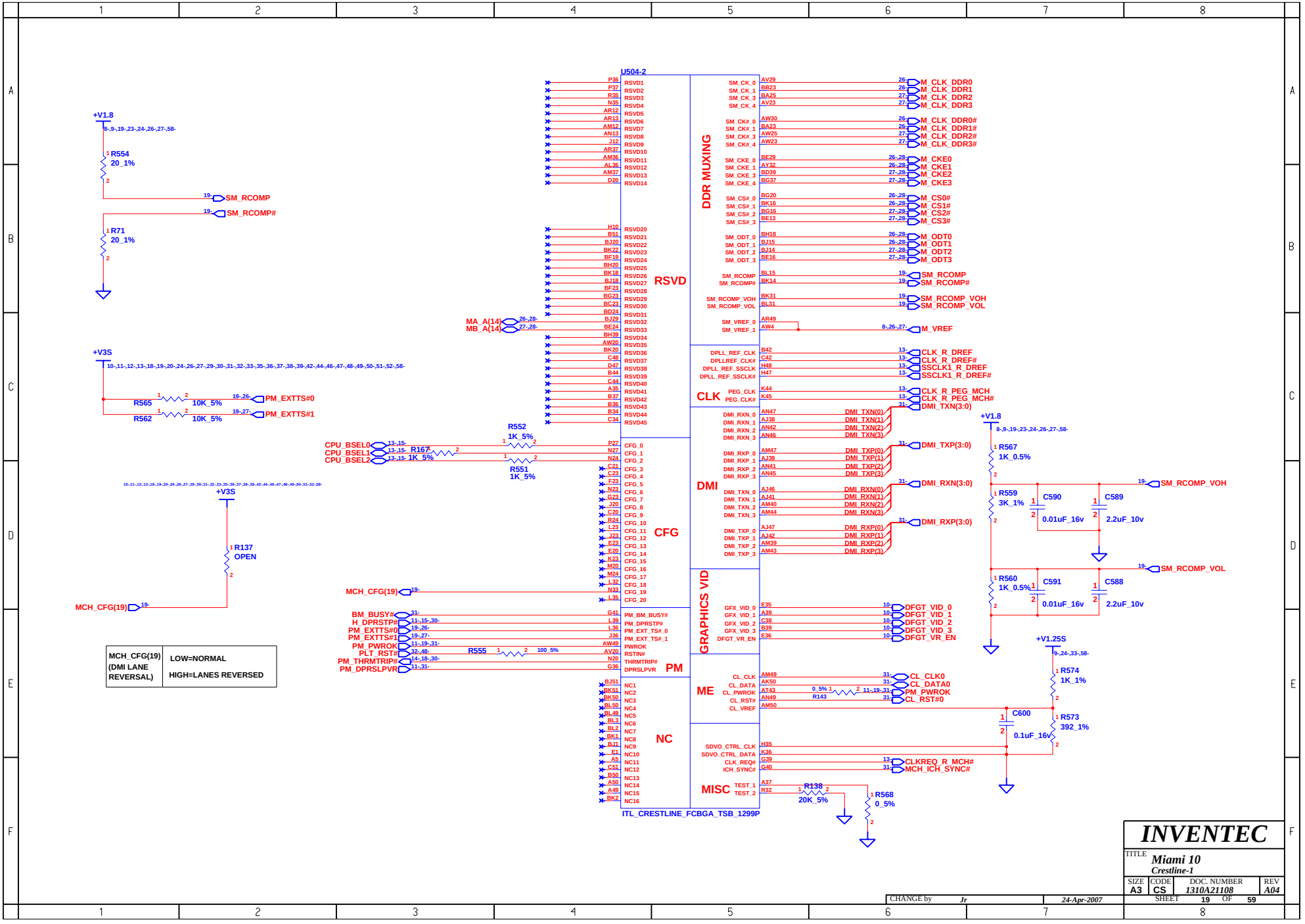

MCH_CFG(19) (DMI LANE REVERSAL)	LOW=NORMAL HIGH=LANES REVERSED

INVENTEC			
TITLE: Miami 10 Crestline-1			
SIZE: A3	CODE: CS	DOC. NUMBER: 1310A21108	REV: A04
CHANGE by: Jr	24-Apr-2007	SHEET 19 OF 59	

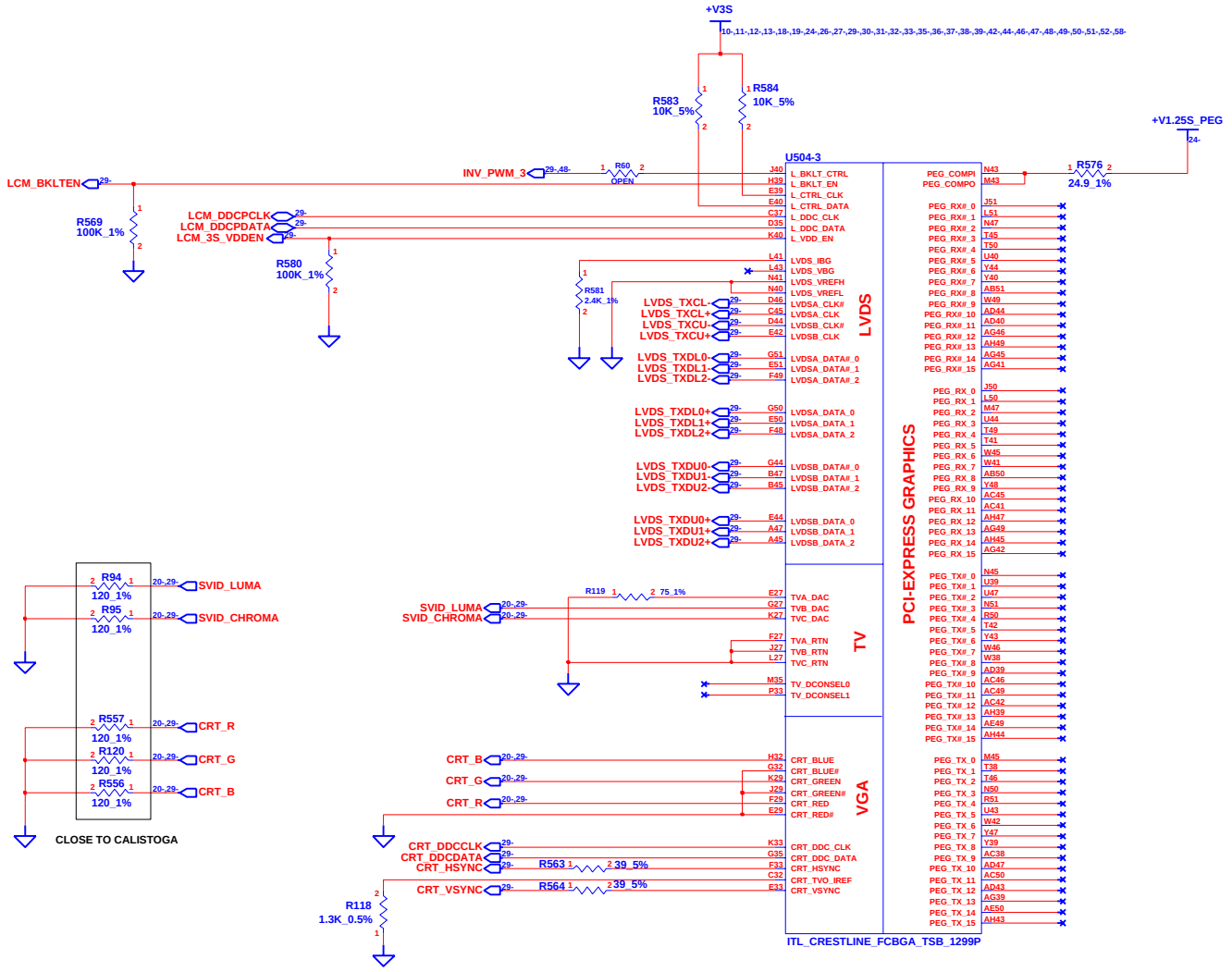

INVENTEC			
TITLE Miami 10 Crestline-2			
SIZE A3	CODE CS	DOC. NUMBER 1310A21108	REV A04
CHANGE by Jr	27-Mar-2007	SHEET 20 OF 59	

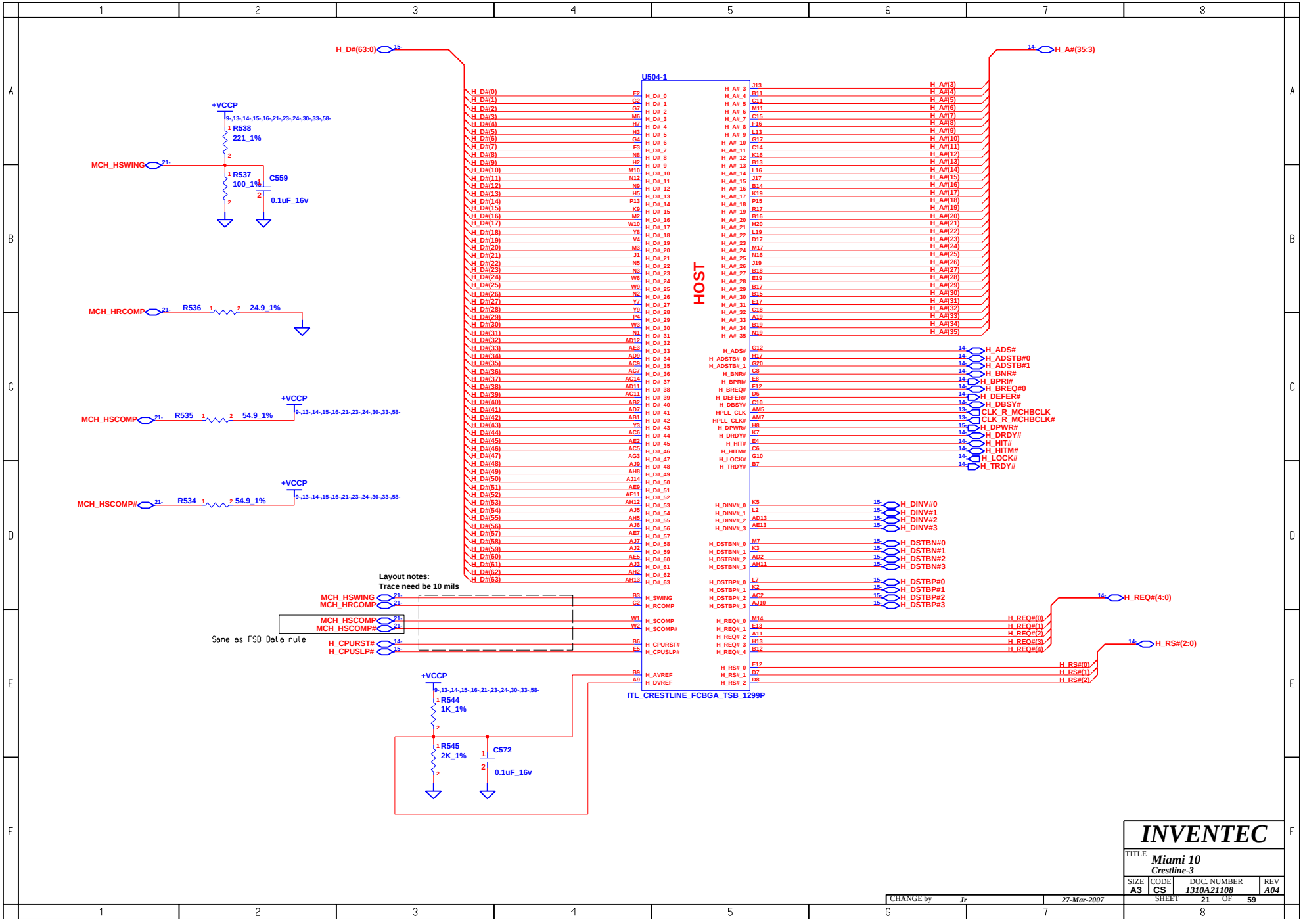
U504-1
HOST
ITL_CRESTLINE_FCBGA_TSB_1299P
H_D#(63:0)
H_A#(35:3)
H_ADS#
H_ADSTB#0
H_ADSTB#1
H_BNR#
H_BPRI#
H_BREQ#0
H_DEFER#
H_DBSY#
CLK_R_MCHBCLK
CLK_R_MCHBCLK#
H_DPWR#
H_DRDY#
H_HIT#
H_HITM#
H_LOCK#
H_TRDY#
H_DINV#0
H_DINV#1
H_DINV#2
H_DINV#3
H_DSTBN#0
H_DSTBN#1
H_DSTBN#2
H_DSTBN#3
H_DSTBP#0
H_DSTBP#1
H_DSTBP#2
H_DSTBP#3
H_REQ#(4:0)
H_RS#(2:0)
+VCCP
R538
221_1%
R537
100_1%
C559
0.1uF_16v
MCH_HSWING
MCH_HRCOMP
R536
24.9_1%
MCH_HSCOMP
R535
54.9_1%
MCH_HSCOMP#
R534
54.9_1%
Layout notes:
Trace need be 10 mils
MCH_HSWING
MCH_HRCOMP
MCH_HSCOMP
MCH_HSCOMP#
Same as FSB Data rule
H_CPURST#
H_CPUSLP#
R544
1K_1%
R545
2K_1%
C572
0.1uF_16v
INVENTEC
TITLE
Miami 10
Crestline-3
SIZE A3
CODE CS
DOC. NUMBER 1310A21108
REV A04
SHEET 21 OF 59
CHANGE by Jr
27-Mar-2007

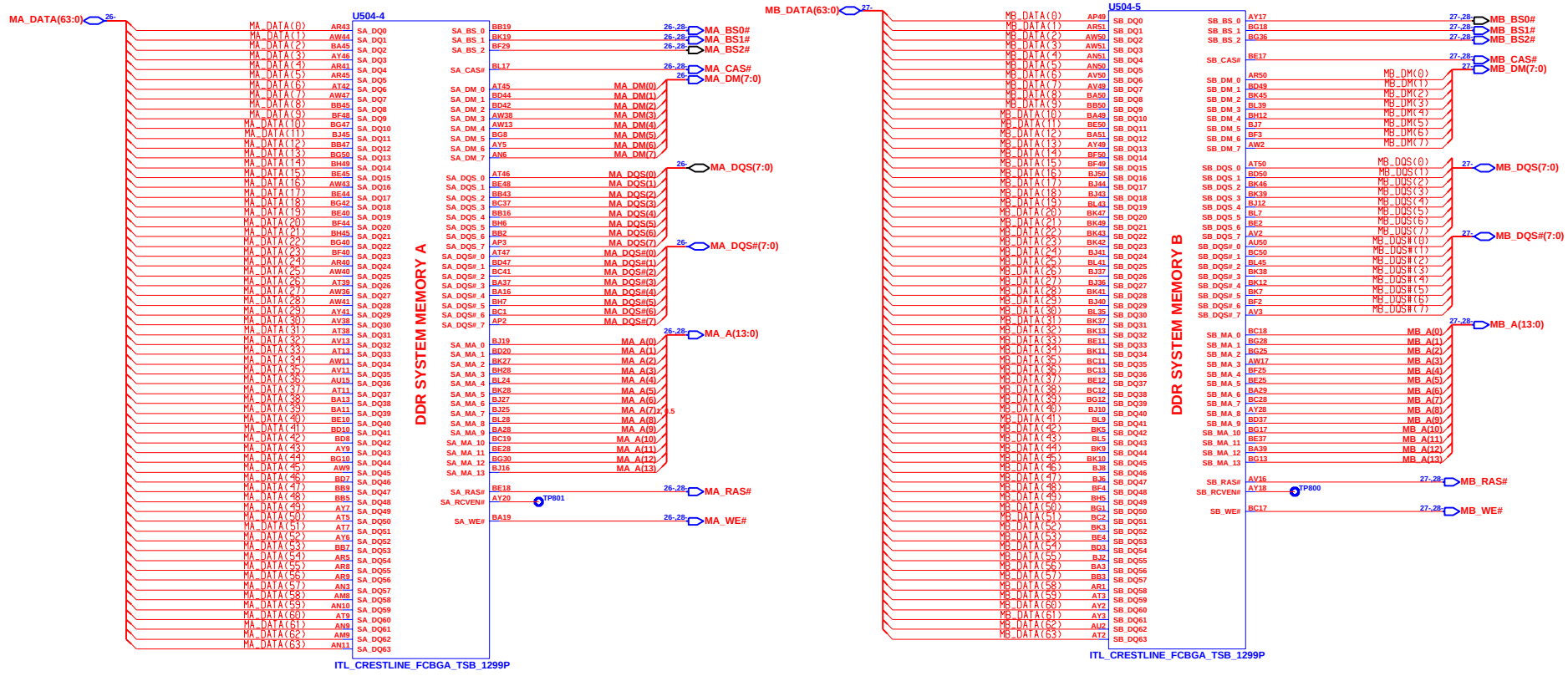

CHANGE by	Jr	27-Mar-2007	

INVENTEC

TITLE *Miami 10*
Crestline-4

SIZE	CODE	DOC. NUMBER	REV
A3	CS	1310A21108	A04

SHEET 22 OF 59

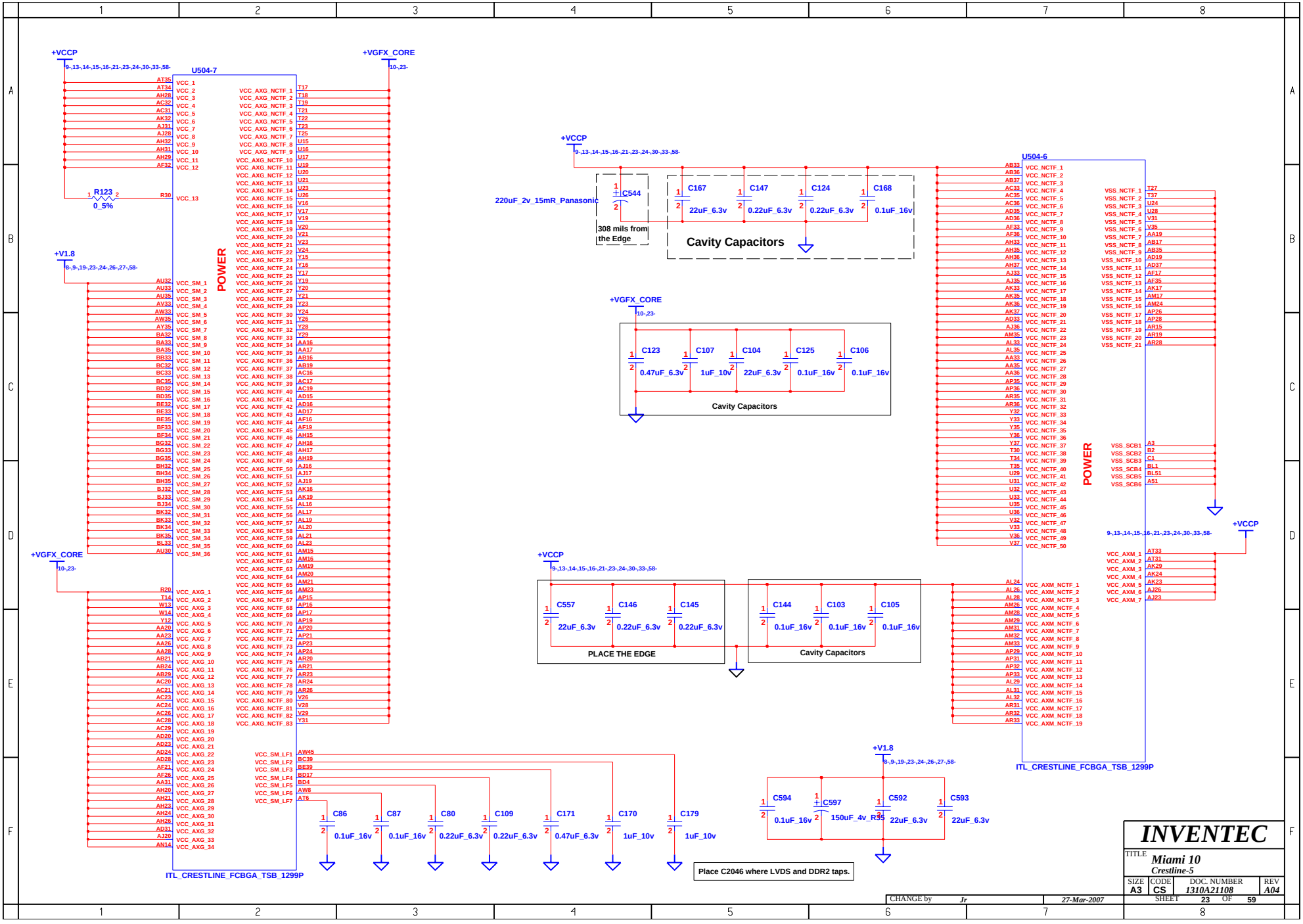
+VCCP
9,-13,-14,-15,-16,-21,-23,-24,-30,-33,-58-
U504-7
+VGFX_CORE
10,-23-
R123
0_5%
+V1.8
8,-9,-19,-23,-24,-26,-27,-58-
POWER
+VGFX_CORE
10,-23-
ITL_CRESTLINE_FCBGA_TSB_1299P
220uF_2v_15mR_Panasonic
C544
308 mils from the Edge
C167
22uF_6.3v
C147
0.22uF_6.3v
C124
0.22uF_6.3v
C168
0.1uF_16v
Cavity Capacitors
+VGFX_CORE
10,-23-
C123
0.47uF_6.3v
C107
1uF_10v
C104
22uF_6.3v
C125
0.1uF_16v
C106
0.1uF_16v
Cavity Capacitors
U504-6
POWER
ITL_CRESTLINE_FCBGA_TSB_1299P
+VCCP
9,-13,-14,-15,-16,-21,-23,-24,-30,-33,-58-
C557
22uF_6.3v
C146
0.22uF_6.3v
C145
0.22uF_6.3v
PLACE THE EDGE
C144
0.1uF_16v
C103
0.1uF_16v
C105
0.1uF_16v
Cavity Capacitors
C86
0.1uF_16v
C87
0.1uF_16v
C80
0.22uF_6.3v
C109
0.22uF_6.3v
C171
0.47uF_6.3v
C170
1uF_10v
C179
1uF_10v
+V1.8
8,-9,-19,-23,-24,-26,-27,-58-
C594
0.1uF_16v
C597
150uF_4v_R35
C592
22uF_6.3v
C593
22uF_6.3v
Place C2046 where LVDS and DDR2 taps.
INVENTEC
TITLE
Miami 10
Crestline-5
SIZE A3
CODE CS
DOC. NUMBER 1310A21108
REV A04
SHEET 23 OF 59
CHANGE by Jr
27-Mar-2007

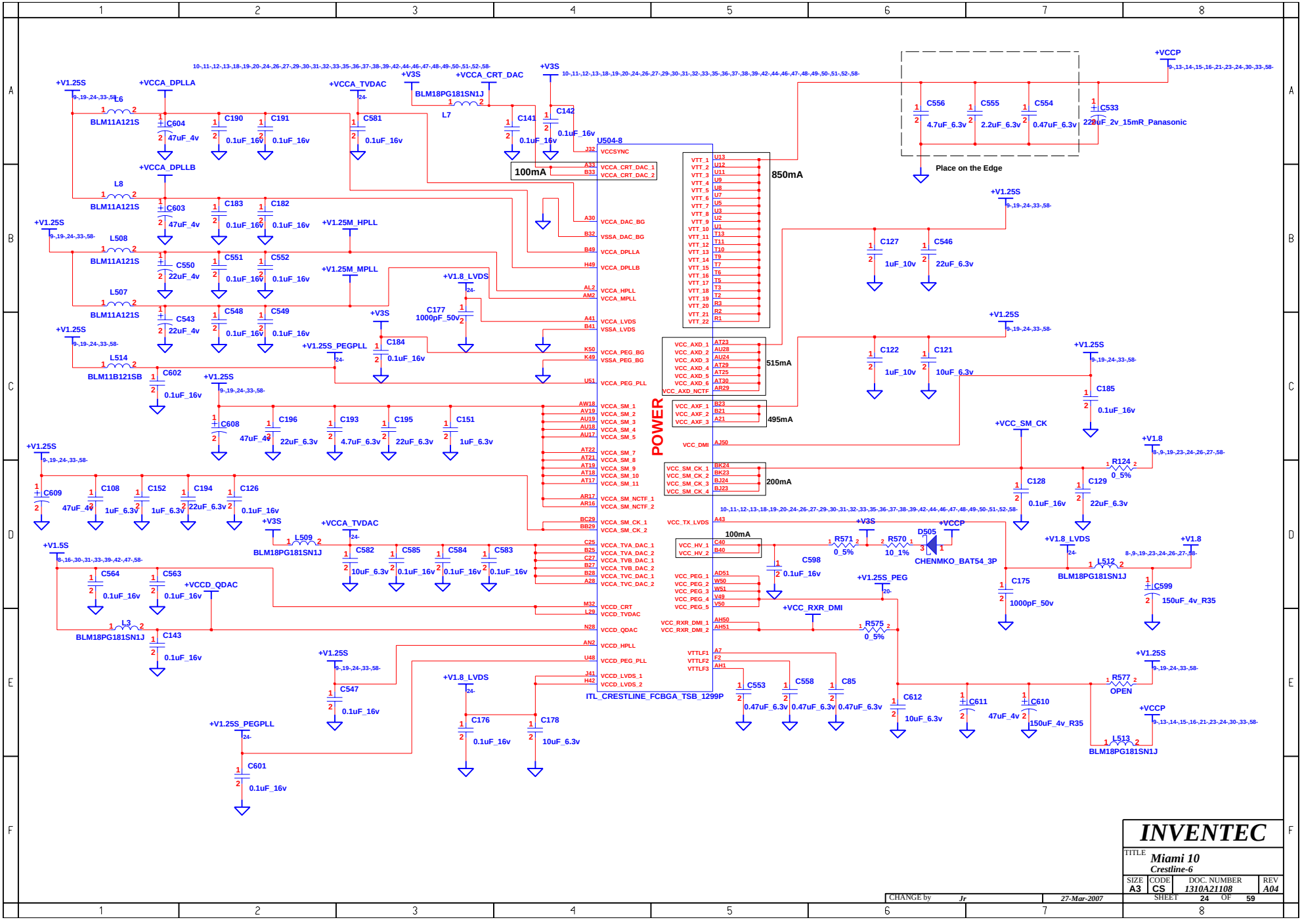

INVENTEC			
TITLE	Miami 10 Crestline-6		
SIZE A3	CODE CS	DOC. NUMBER 1310A21108	REV A04
CHANGE by Jr	27-Mar-2007	SHEET 24 OF 59	

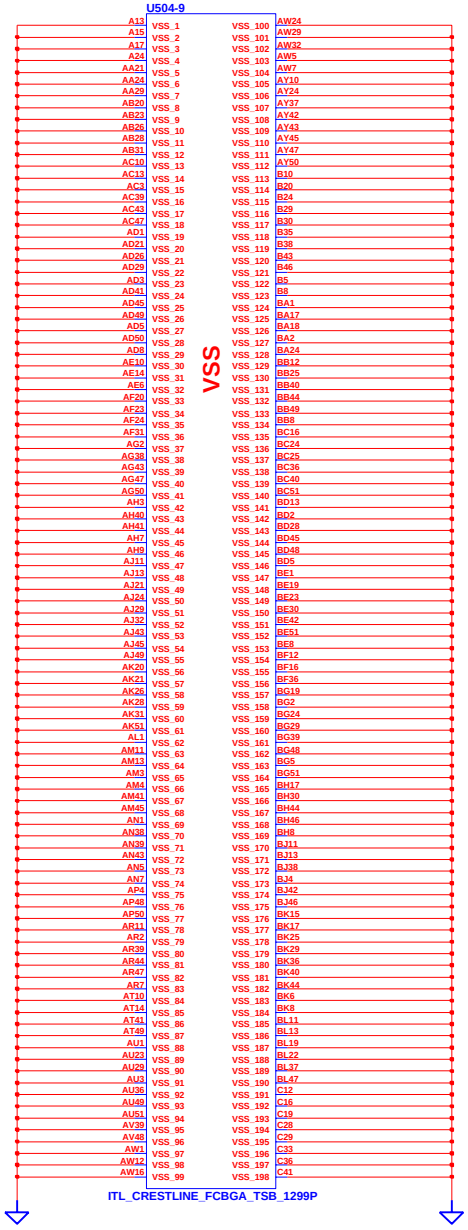

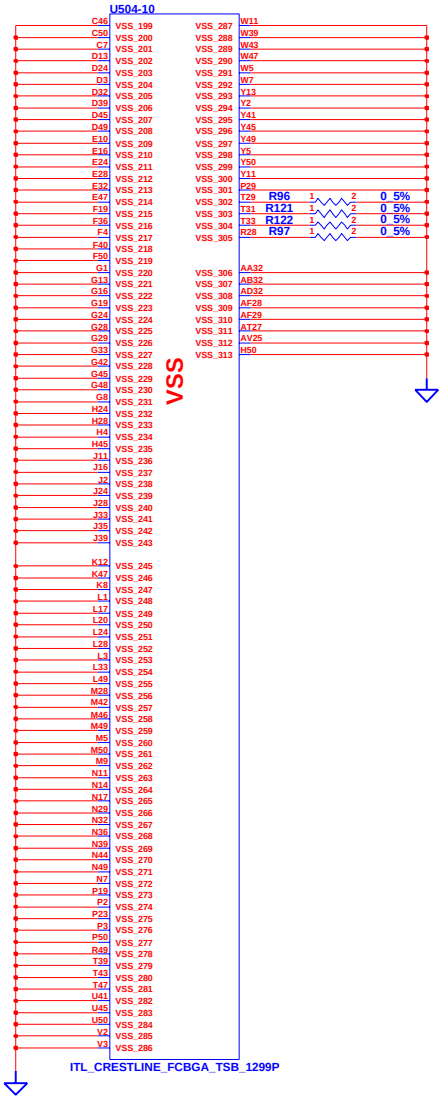

CHANGE by	Jr	27-Mar-2007	

INVENTEC

TITLE *Miami 10*
Crestline-7

SIZE	CODE	DOC. NUMBER	REV
A3	CS	1310A21108	A04

SHEET 25 OF 59

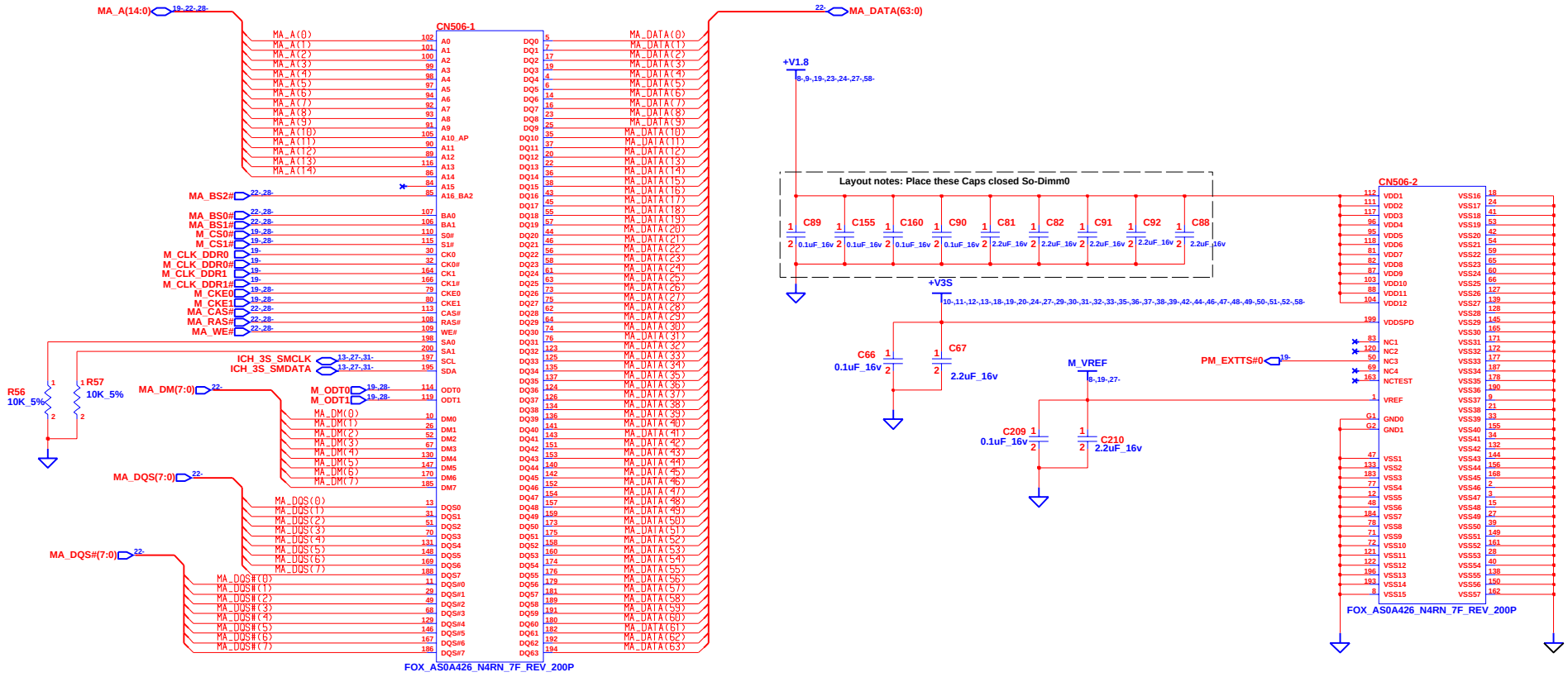

SO DIMM0

INVENTEC			
TITLE: Miami 10 DDR2-DIMM-0			
SIZE: A3	CODE: CS	DOC. NUMBER: 1310A21108	REV: A04
CHANGE by: Jr	27-Mar-2007	SHEET 26 OF 59	

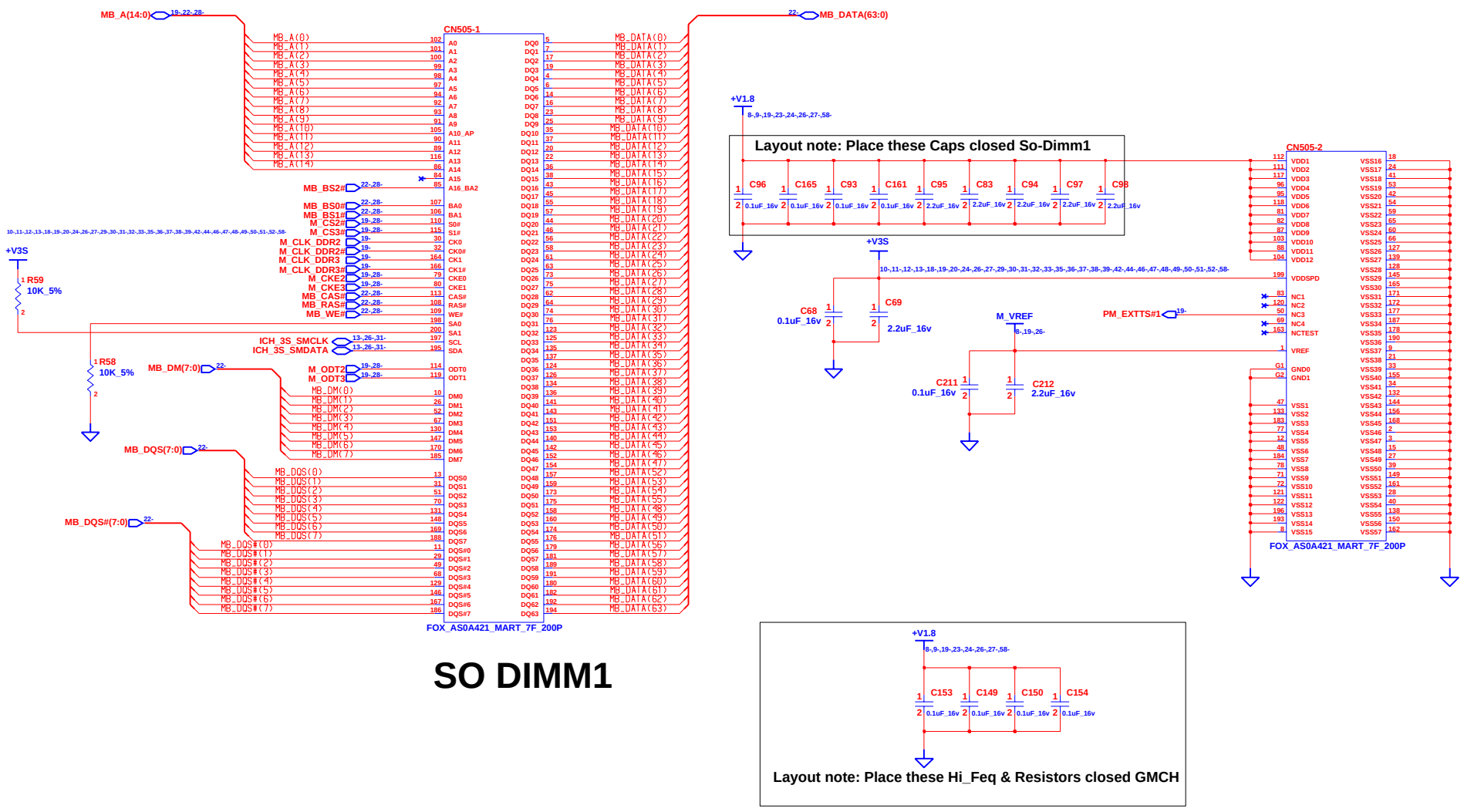

SO DIMM1

INVENTEC

TITLE Miami 10
DDR2-DIMM-1

SIZE	CODE	DOC. NUMBER	REV
A3	CS	1310A21108	A04

SHEET 27 OF 59

CHANGE by Jr 27-Mar-2007

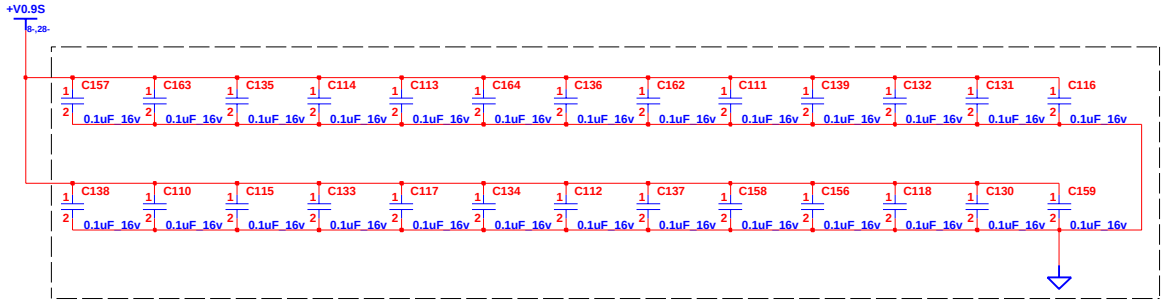

LAYOUT NOTES : PLACE ONE CAP CLOSE TO EVERY 2 PULL UP RESISTOR TERMINATED TO +V0.9S

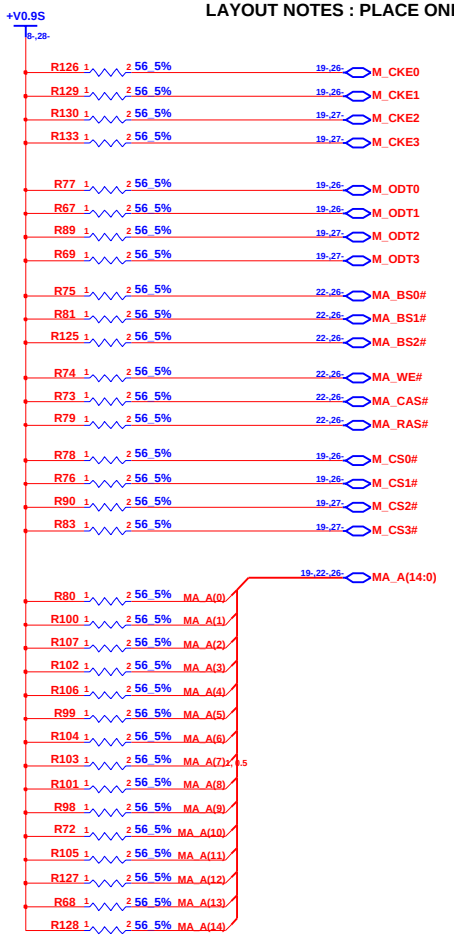

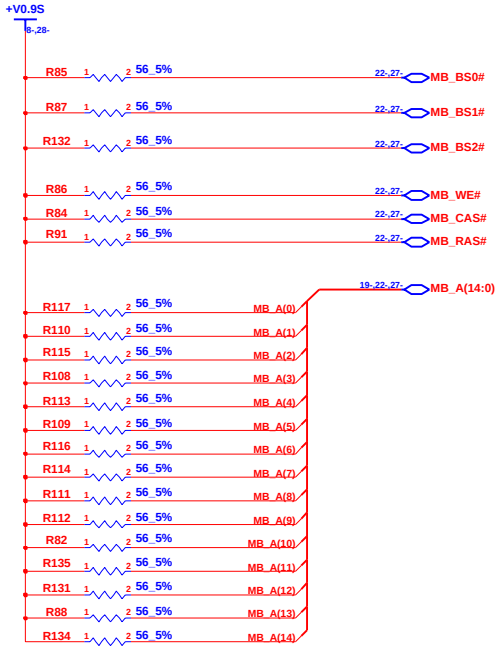

CHANGE by	Jr	27-Mar-2007	

INVENTEC

TITLE *Miami 10*
DDR2-DAMPING

SIZE	CODE	DOC. NUMBER	REV
A3	CS	1310A21108	A04

SHEET 28 OF 59

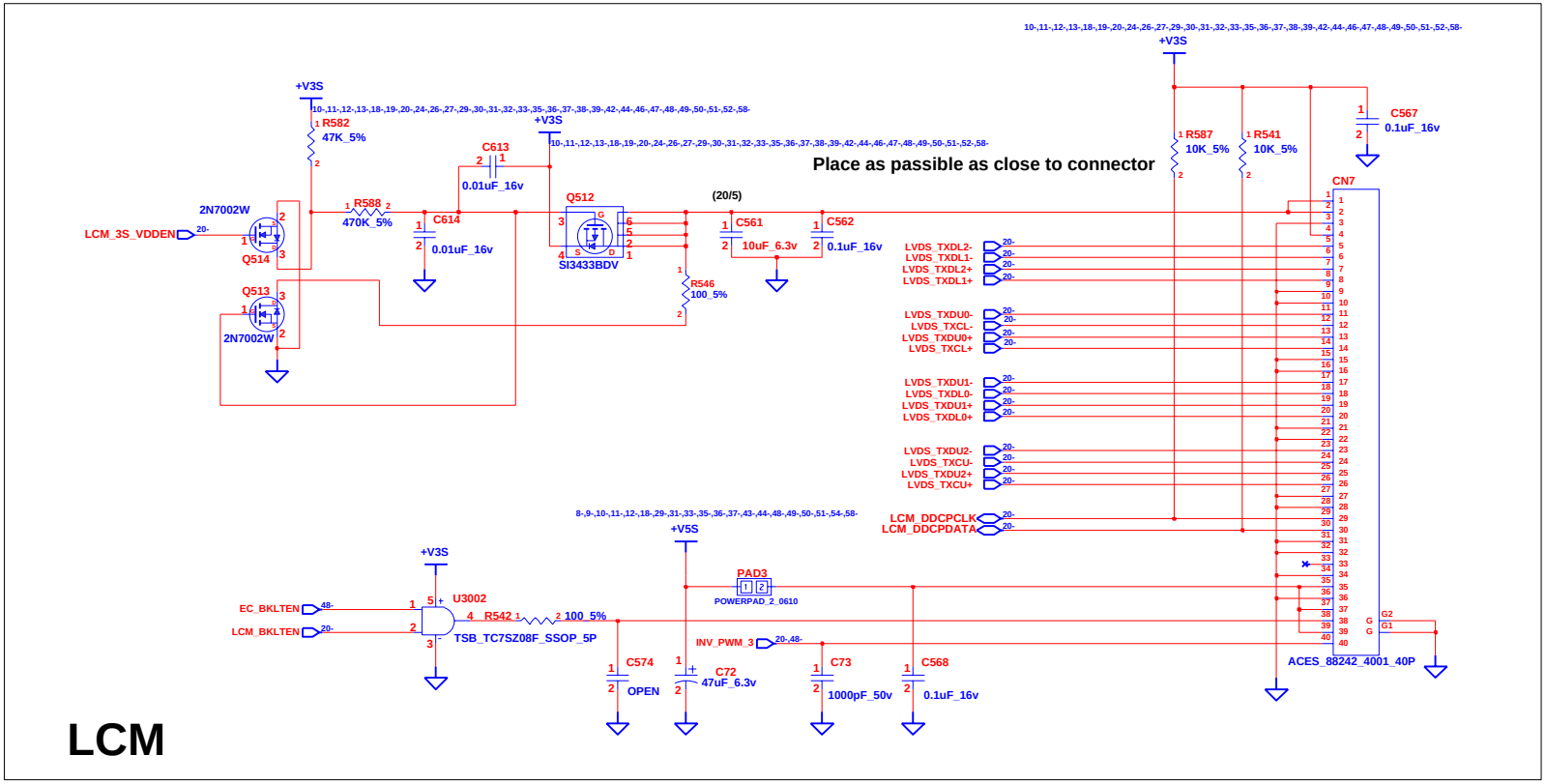

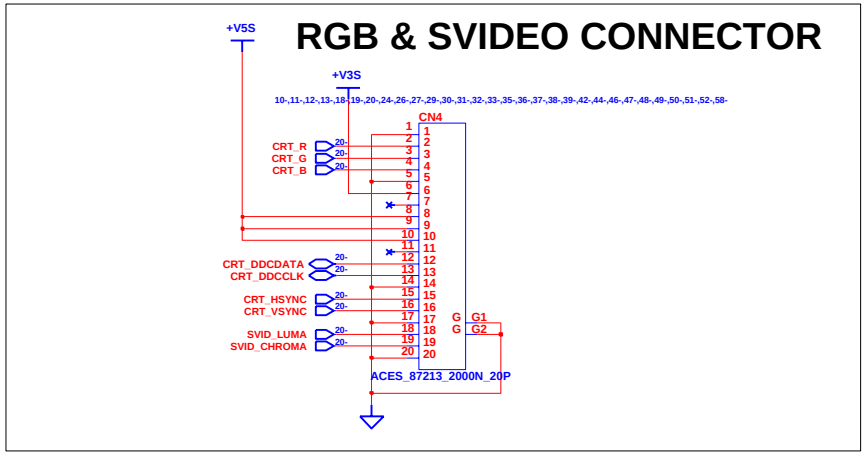

INVENTEC

TITLE Miami 10
LCM

SIZE	CODE	DOC. NUMBER	REV
A3	CS	1310A21108	A04

SHEET 29 OF 59

CHANGE by Jr 27-Sep-2003

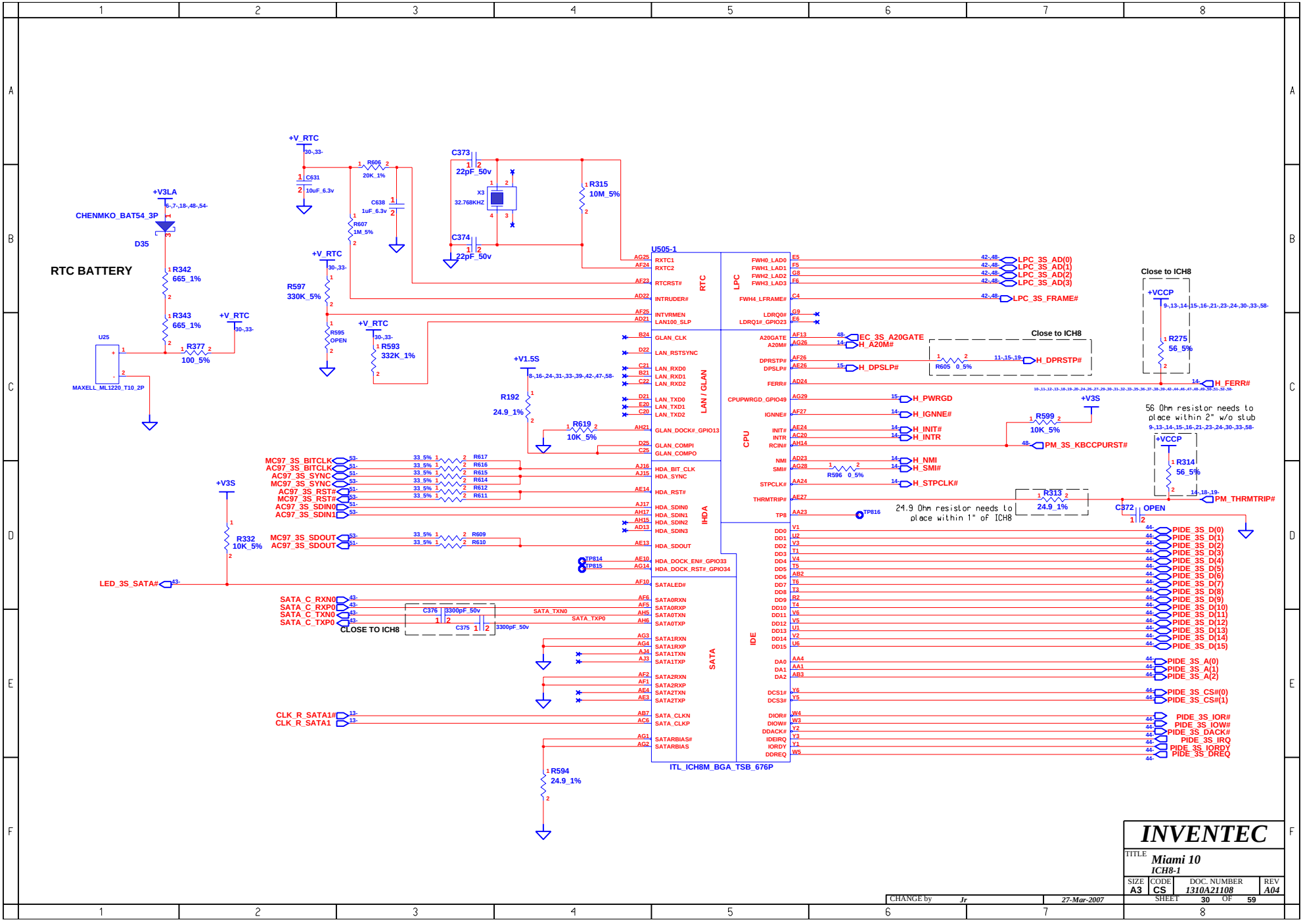
RTC BATTERY
CHENMKO_BAT54_3P
D35
+V3LA
R342 665_1%
R343 665_1%
R377 100_5%
U25
MAXELL_ML1220_T10_2P
+V_RTC
C631 10uF_6.3v
R606 20K_1%
C638 1uF_6.3v
R607 1M_5%
R597 330K_5%
R595 OPEN
R593 332K_1%
C373 22pF_50v
C374 22pF_50v
X3 32.768KHZ
R315 10M_5%
U505-1
RTC
LPC
LAN / GLAN
CPU
IHDA
SATA
IDE
ITL_ICH8M_BGA_TSB_676P
LPC_3S_AD(0)
LPC_3S_AD(1)
LPC_3S_AD(2)
LPC_3S_AD(3)
LPC_3S_FRAME#
EC_3S_A20GATE
H_A20M#
H_DPSLP#
H_DPRSTP#
R605 0_5%
Close to ICH8
+VCCP
R275 56_5%
H_FERR#
H_PWRGD
H_IGNNE#
H_INIT#
H_INTR
PM_3S_KBCCPURST#
R599 10K_5%
+V3S
56 Ohm resistor needs to place within 2" w/o stub
R314 56_5%
PM_THRMTRIP#
R596 0_5%
H_NMI
H_SMI#
H_STPCLK#
R313 24.9_1%
24.9 Ohm resistor needs to place within 1" of ICH8
C372 OPEN
TP816
+V1.5S
R192 24.9_1%
R619 10K_5%
MC97_3S_BITCLK
AC97_3S_BITCLK
AC97_3S_SYNC
MC97_3S_SYNC
AC97_3S_RST#
MC97_3S_RST#
AC97_3S_SDIN0
AC97_3S_SDIN1
MC97_3S_SDOUT
AC97_3S_SDOUT
R617
R616
R615
R614
R612
R611
R609
R610
R332 10K_5%
LED_3S_SATA#
TP814
TP815
SATA_C_RXN0
SATA_C_RXP0
SATA_C_TXN0
SATA_C_TXP0
C376 3300pF_50v
C375 3300pF_50v
CLOSE TO ICH8
SATA_TXN0
SATA_TXP0
CLK_R_SATA1#
CLK_R_SATA1
R594 24.9_1%
PIDE_3S_D(0)
PIDE_3S_D(1)
PIDE_3S_D(2)
PIDE_3S_D(3)
PIDE_3S_D(4)
PIDE_3S_D(5)
PIDE_3S_D(6)
PIDE_3S_D(7)
PIDE_3S_D(8)
PIDE_3S_D(9)
PIDE_3S_D(10)
PIDE_3S_D(11)
PIDE_3S_D(12)
PIDE_3S_D(13)
PIDE_3S_D(14)
PIDE_3S_D(15)
PIDE_3S_A(0)
PIDE_3S_A(1)
PIDE_3S_A(2)
PIDE_3S_CS#(0)
PIDE_3S_CS#(1)
PIDE_3S_IOR#
PIDE_3S_IOW#
PIDE_3S_DACK#
PIDE_3S_IRQ
PIDE_3S_IORDY
PIDE_3S_DREQ
INVENTEC
TITLE Miami 10
ICH8-1
SIZE A3
CODE CS
DOC. NUMBER 1310A21108
REV A04
SHEET 30 OF 59
CHANGE by Jr
27-Mar-2007

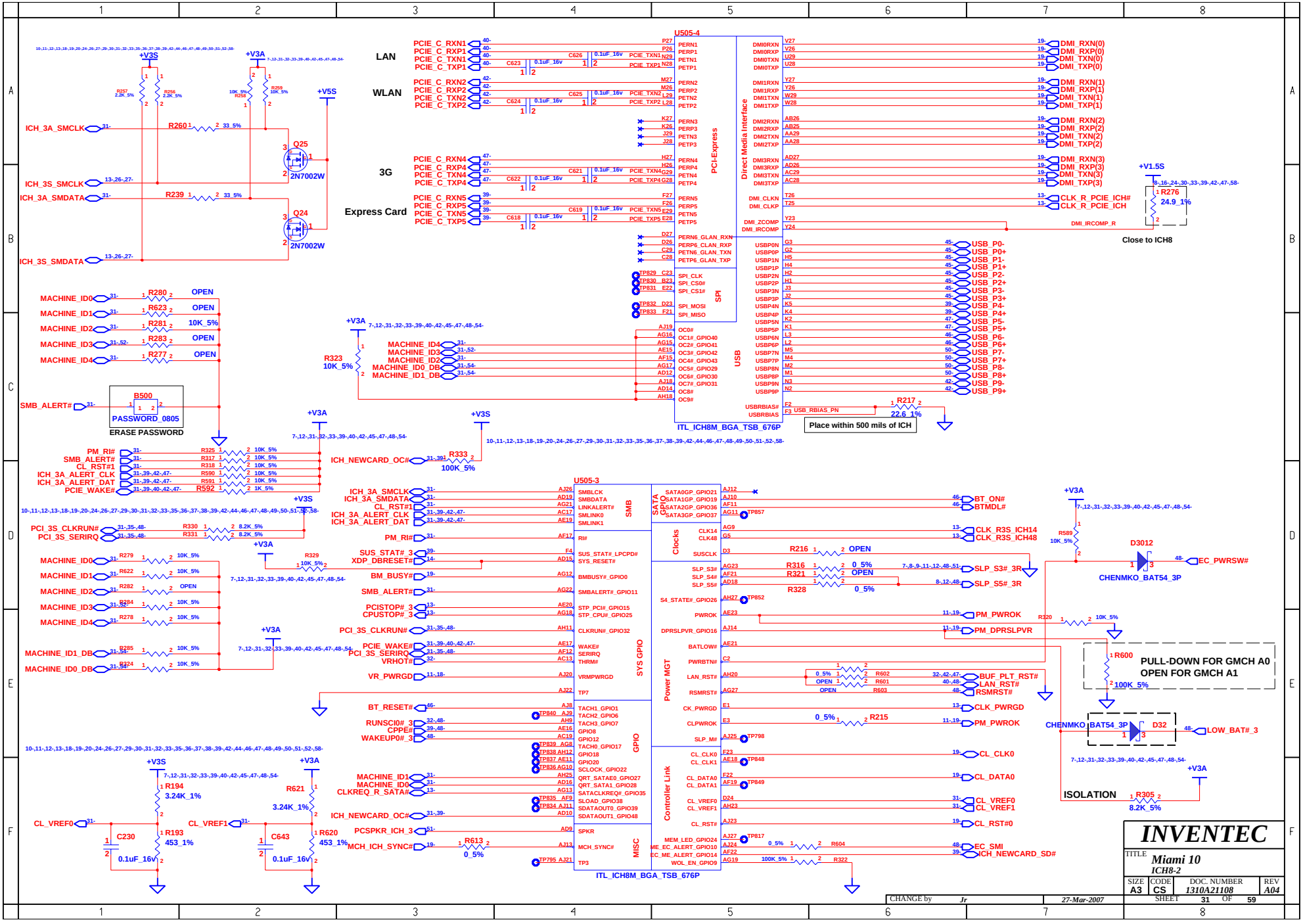
U505-4
LAN
WLAN
3G
Express Card
PCI-Express
Direct Media Interface
SPI
USB
ITL_ICH8M_BGA_TSB_676P
Place within 500 mils of ICH
Close to ICH8
ERASE PASSWORD
PASSWORD_0805
2N7002W
U505-3
SMB
SATA GPIO
Clocks
Power MGT
SYS GPIO
GPIO
Controller Link
MISC
PULL-DOWN FOR GMCH A0
OPEN FOR GMCH A1
CHENMKO_BAT54_3P
ISOLATION
INVENTEC
Miami 10
ICH8-2
SIZE A3
CODE CS
DOC. NUMBER 1310A21108
REV A04
SHEET 31 OF 59
CHANGE by Jr
27-Mar-2007

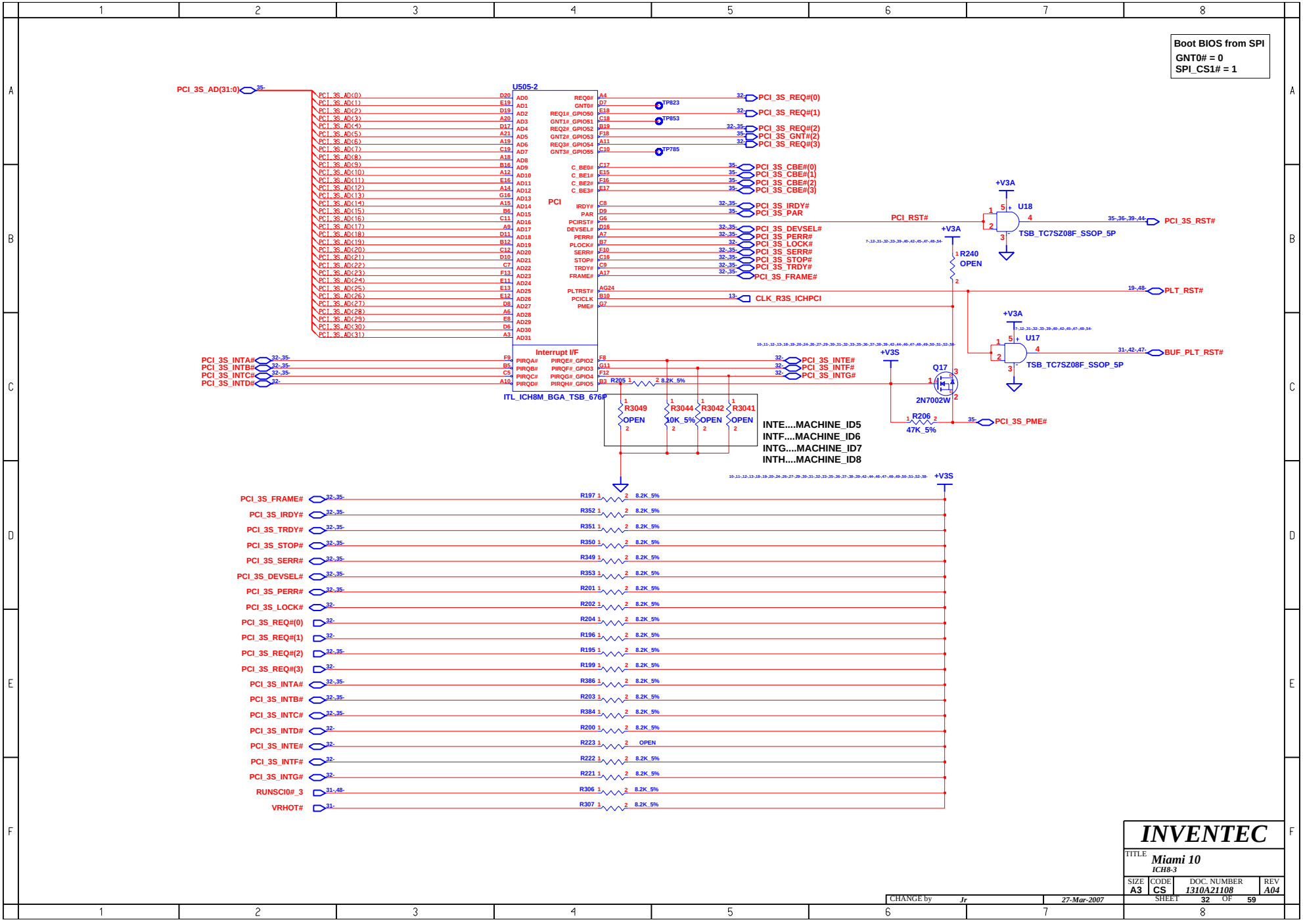
Boot BIOS from SPI
GNT0# = 0
SPI_CS1# = 1
U505-2
PCI
Interrupt I/F
ITL_ICH8M_BGA_TSB_676P
PCI_3S_AD(31:0)
PCI_3S_REQ#(0)
PCI_3S_REQ#(1)
PCI_3S_REQ#(2)
PCI_3S_GNT#(2)
PCI_3S_REQ#(3)
PCI_3S_CBE#(0)
PCI_3S_CBE#(1)
PCI_3S_CBE#(2)
PCI_3S_CBE#(3)
PCI_3S_IRDY#
PCI_3S_PAR
PCI_3S_DEVSEL#
PCI_3S_PERR#
PCI_3S_LOCK#
PCI_3S_SERR#
PCI_3S_STOP#
PCI_3S_TRDY#
PCI_3S_FRAME#
CLK_R3S_ICHPCI
PCI_3S_INTA#
PCI_3S_INTB#
PCI_3S_INTC#
PCI_3S_INTD#
PCI_3S_INTE#
PCI_3S_INTF#
PCI_3S_INTG#
PCI_RST#
PCI_3S_RST#
PLT_RST#
BUF_PLT_RST#
PCI_3S_PME#
U18
U17
TSB_TC7SZ08F_SSOP_5P
R240
OPEN
Q17
2N7002W
R206
47K_5%
R205
8.2K_5%
R3049
OPEN
R3044
10K_5%
R3042
OPEN
R3041
OPEN
INTE....MACHINE_ID5
INTF....MACHINE_ID6
INTG....MACHINE_ID7
INTH....MACHINE_ID8
+V3A
+V3S
INVENTEC
TITLE
Miami 10
ICH8-3
SIZE A3
CODE CS
DOC. NUMBER 1310A21108
REV A04
SHEET 32 OF 59
CHANGE by Jr
27-Mar-2007

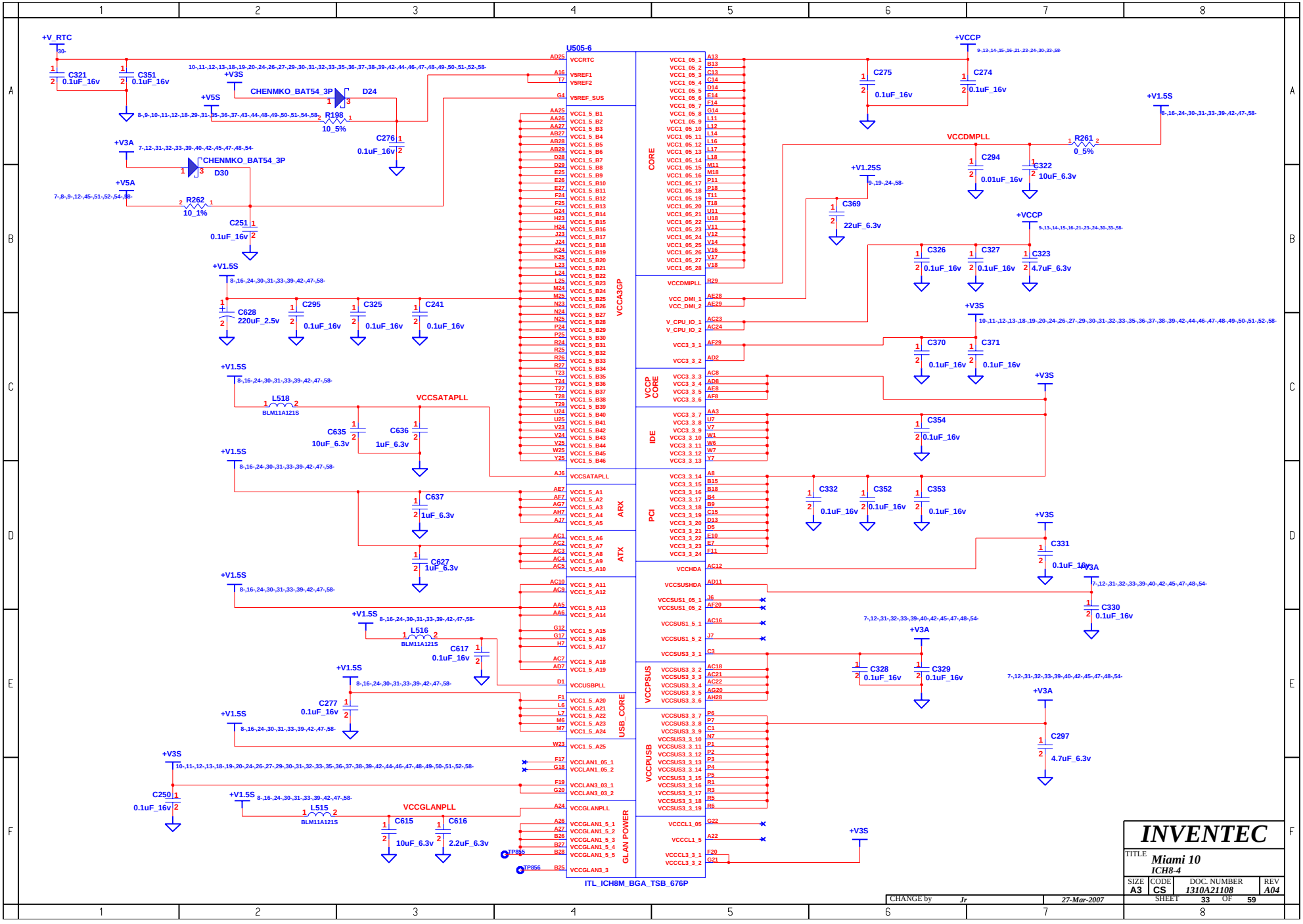
U505-6
ITL_ICH8M_BGA_TSB_676P
CORE
VCCA3GP
VCCP CORE
IDE
PCI
ARX
ATX
USB_CORE
VCCPSUS
VCCPUSB
GLAN POWER
+V_RTC
+V3S
+V5S
+V3A
+V5A
+V1.5S
+V1.25S
+VCCP
VCCDMPLL
VCCSATAPLL
VCCGLANPLL
CHENMKO_BAT54_3P
D24
D30
R198
10_5%
R262
10_1%
R261
0_5%
C321
0.1uF_16v
C351
0.1uF_16v
C276
0.1uF_16v
C251
0.1uF_16v
C628
220uF_2.5v
C295
0.1uF_16v
C325
0.1uF_16v
C241
0.1uF_16v
L518
BLM11A121S
C635
10uF_6.3v
C636
1uF_6.3v
C637
1uF_6.3v
C627
1uF_6.3v
L516
BLM11A121S
C617
0.1uF_16v
C277
0.1uF_16v
C250
0.1uF_16v
L515
BLM11A121S
C615
10uF_6.3v
C616
2.2uF_6.3v
TP855
TP856
C275
0.1uF_16v
C274
0.1uF_16v
C294
0.01uF_16v
C322
10uF_6.3v
C369
22uF_6.3v
C326
0.1uF_16v
C327
0.1uF_16v
C323
4.7uF_6.3v
C370
0.1uF_16v
C371
0.1uF_16v
C354
0.1uF_16v
C332
0.1uF_16v
C352
0.1uF_16v
C353
0.1uF_16v
C331
0.1uF_16v
C330
0.1uF_16v
C328
0.1uF_16v
C329
0.1uF_16v
C297
4.7uF_6.3v
INVENTEC
TITLE
Miami 10
ICH8-4
SIZE A3
CODE CS
DOC. NUMBER 1310A21108
REV A04
SHEET 33 OF 59
CHANGE by Jr
27-Mar-2007

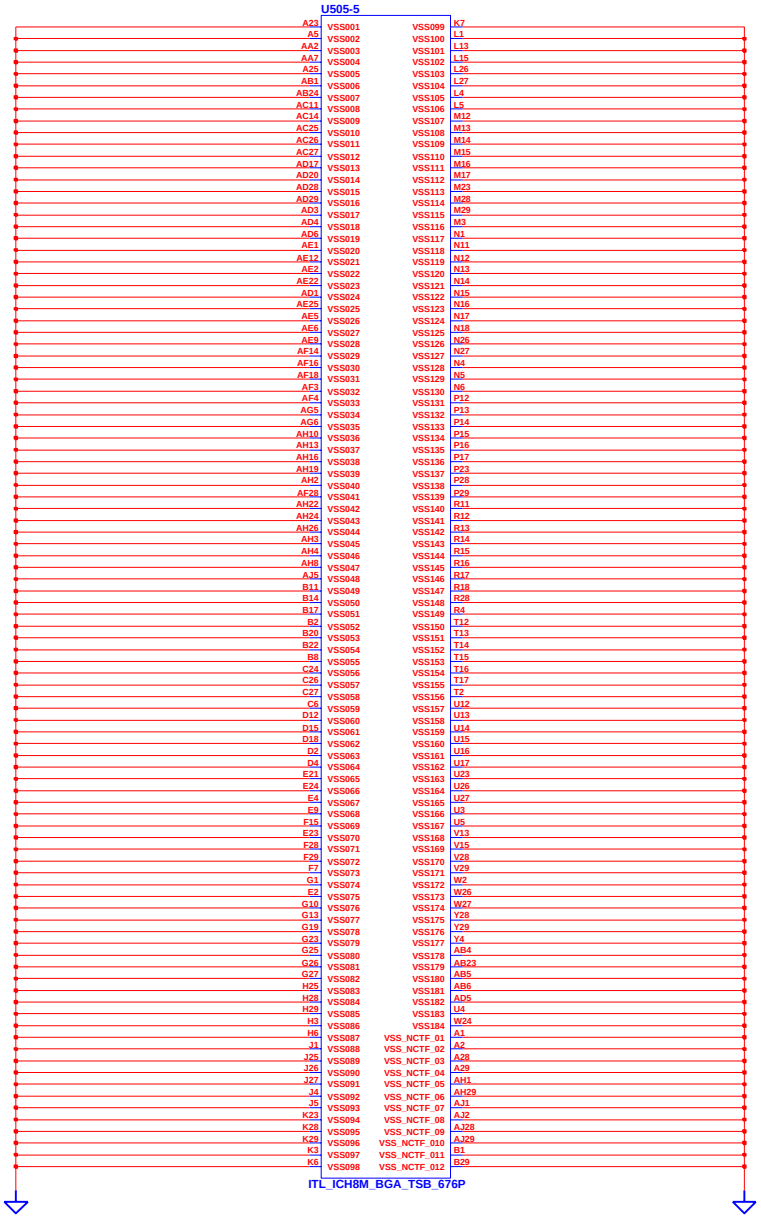

CHANGE by	Jr	27-Mar-2007	

INVENTEC

TITLE *Miami 10*
ICH8-5

SIZE	CODE	DOC. NUMBER	REV
A3	CS	1310A21108	A04

SHEET 34 OF 59

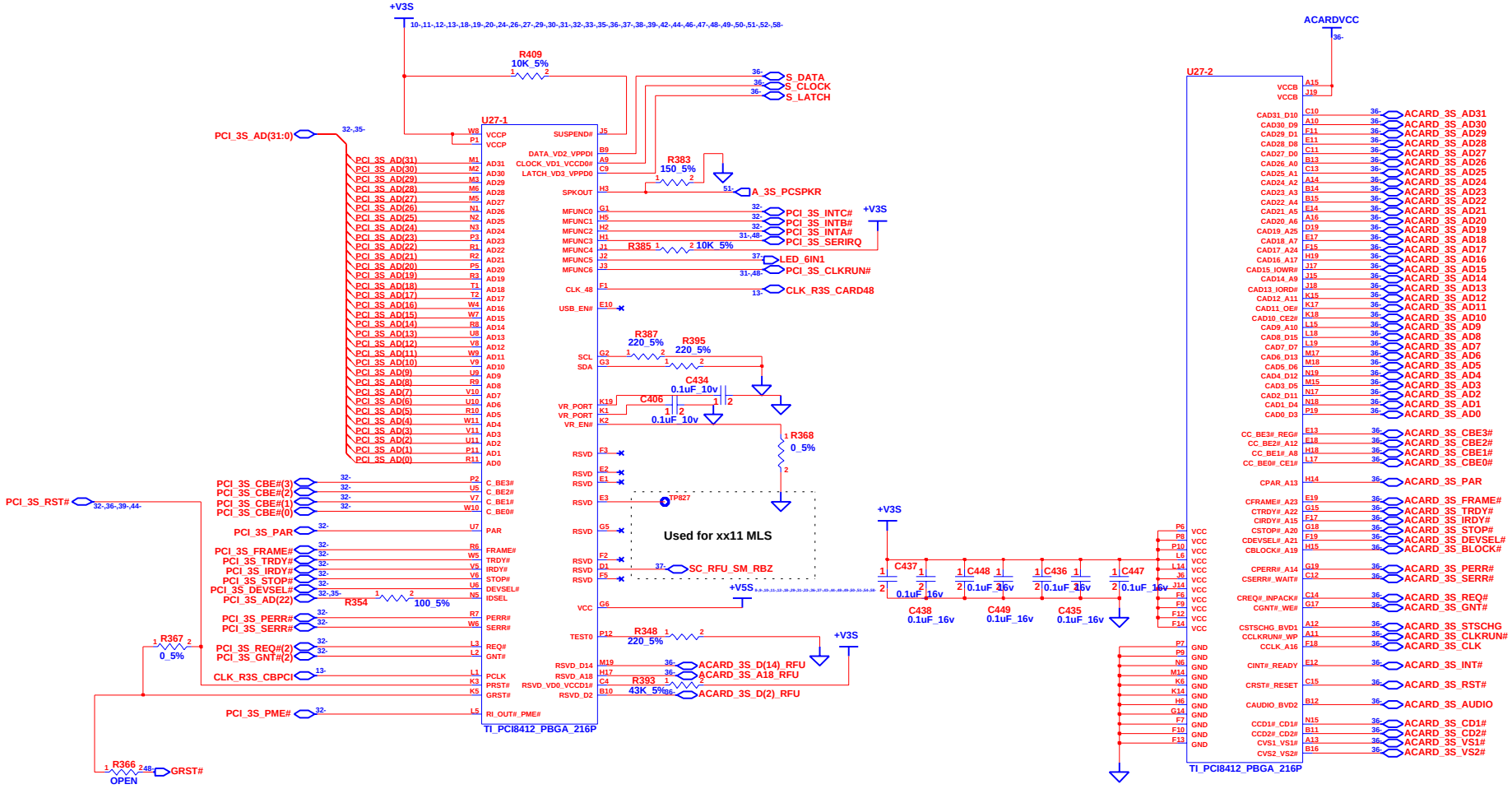

	PCMCIA	1394	5 IN 1
PCI8412	V	V	V
PCI8402		V	V

INVENTEC

TITLE *Miami 10*
CARDBUS CONTROLLER

SIZE	CODE	DOC. NUMBER	REV
A3	CS	1310A21108	A04

SHEET 35 OF 59

CHANGE by Jr 27-Mar-2007

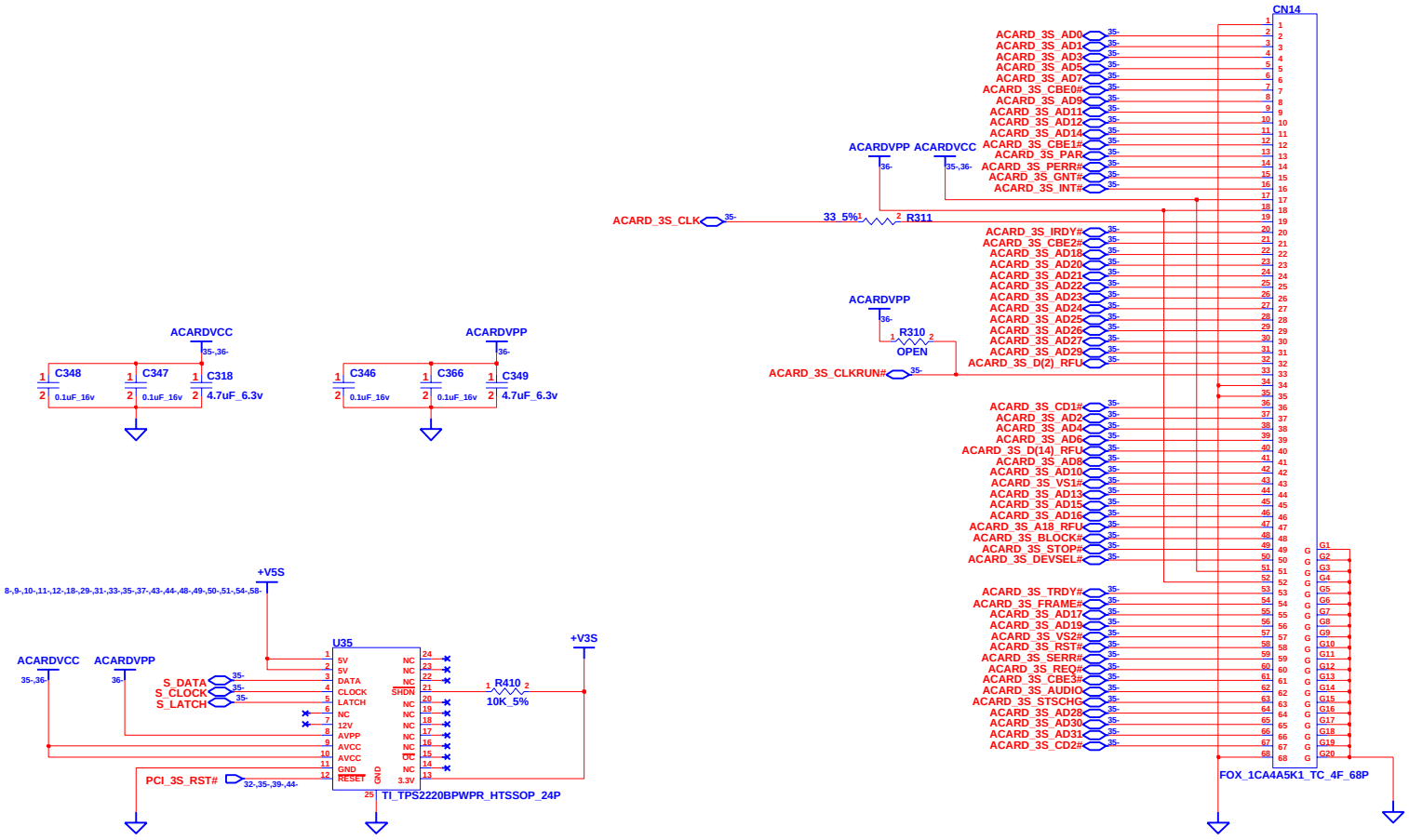

INVENTEC

TITLE
Miami 10
PCMCIA CONN

SIZE	CODE	DOC. NUMBER	REV
A3	CS	1310A21108	A04

SHEET 36 OF 59

CHANGE by Jr 27-Mar-2007

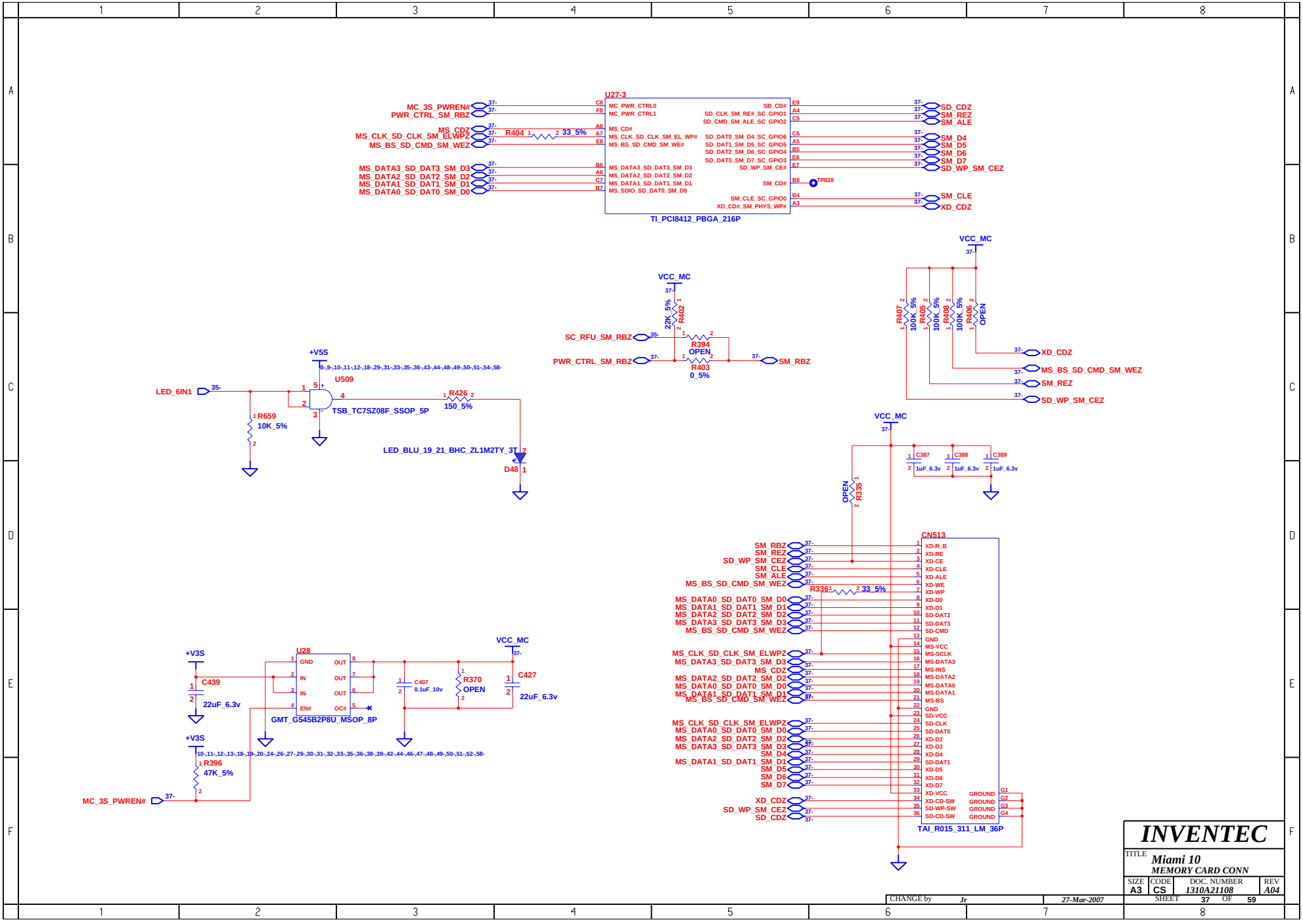

INVENTEC

TITLE
Miami 10
MEMORY CARD CONN

SIZE	CODE	DOC. NUMBER	REV
A3	CS	1310A21108	A04

CHANGE by *Jr* *27-Mar-2007*

SHEET 37 OF 59

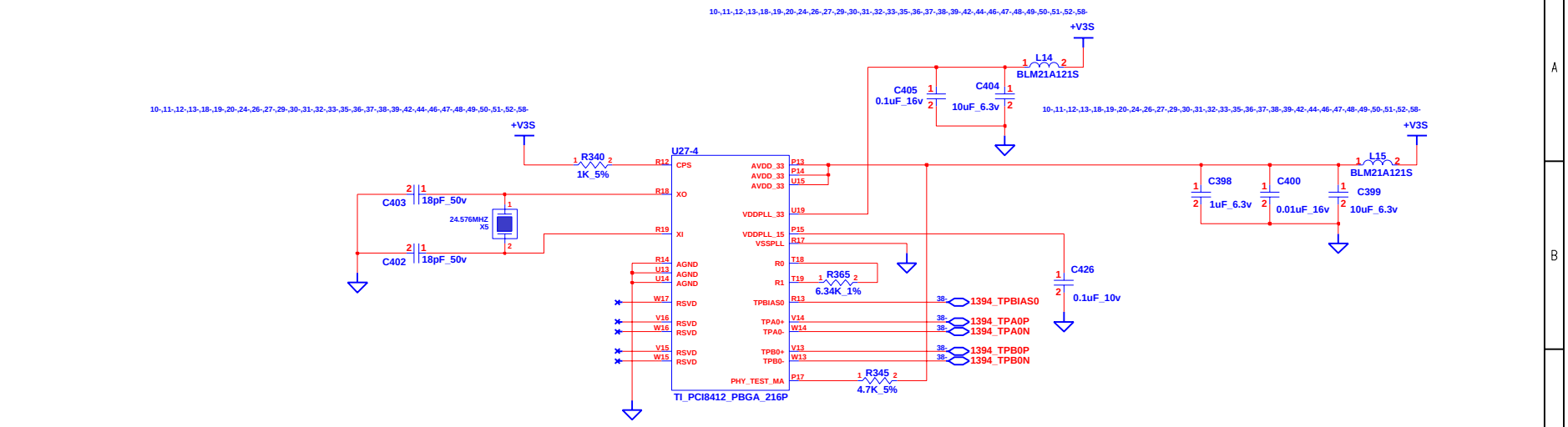

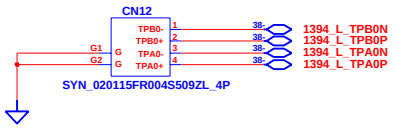

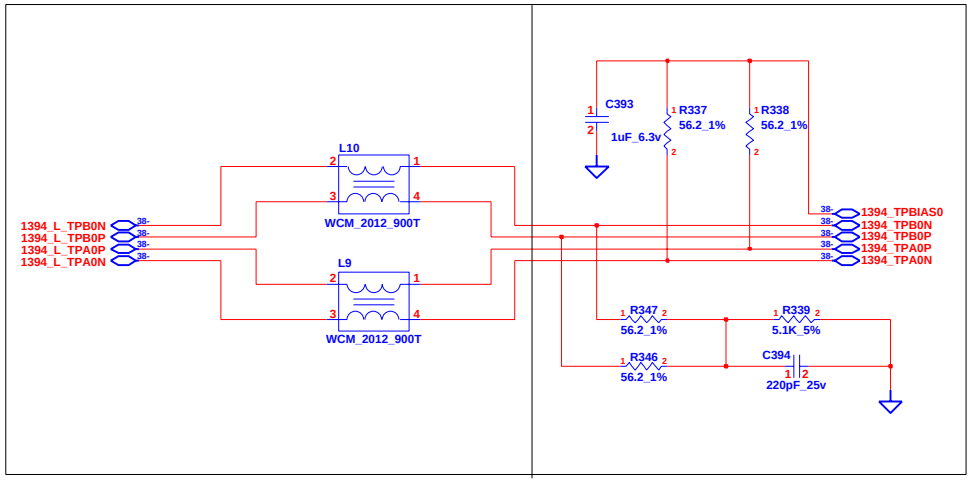

NEAR TO CN

NEAR TO IC

INVENTEC			
TITLE Miami 10 1394			
SIZE A3	CODE CS	DOC. NUMBER 1310A21108	REV A04
CHANGE by Jr	27-Mar-2007	SHEET 38 OF 59	

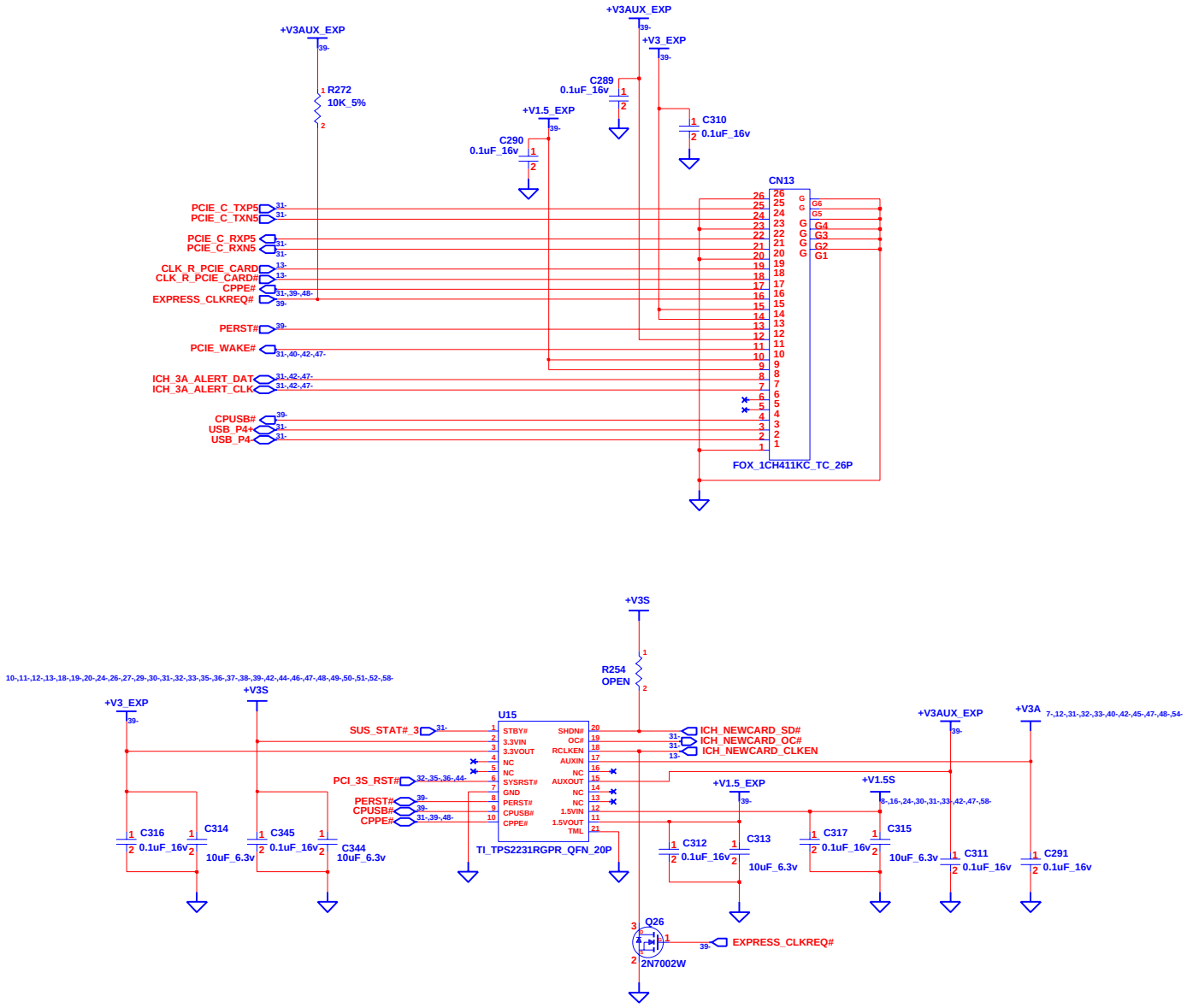

INVENTEC

TITLE **Miami 10**
EXPRESS CARD

SIZE	CODE	DOC. NUMBER	REV
A3	CS	1310A21108	A04

CHANGE by Jr 27-Mar-2007

SHEET 39 OF 59

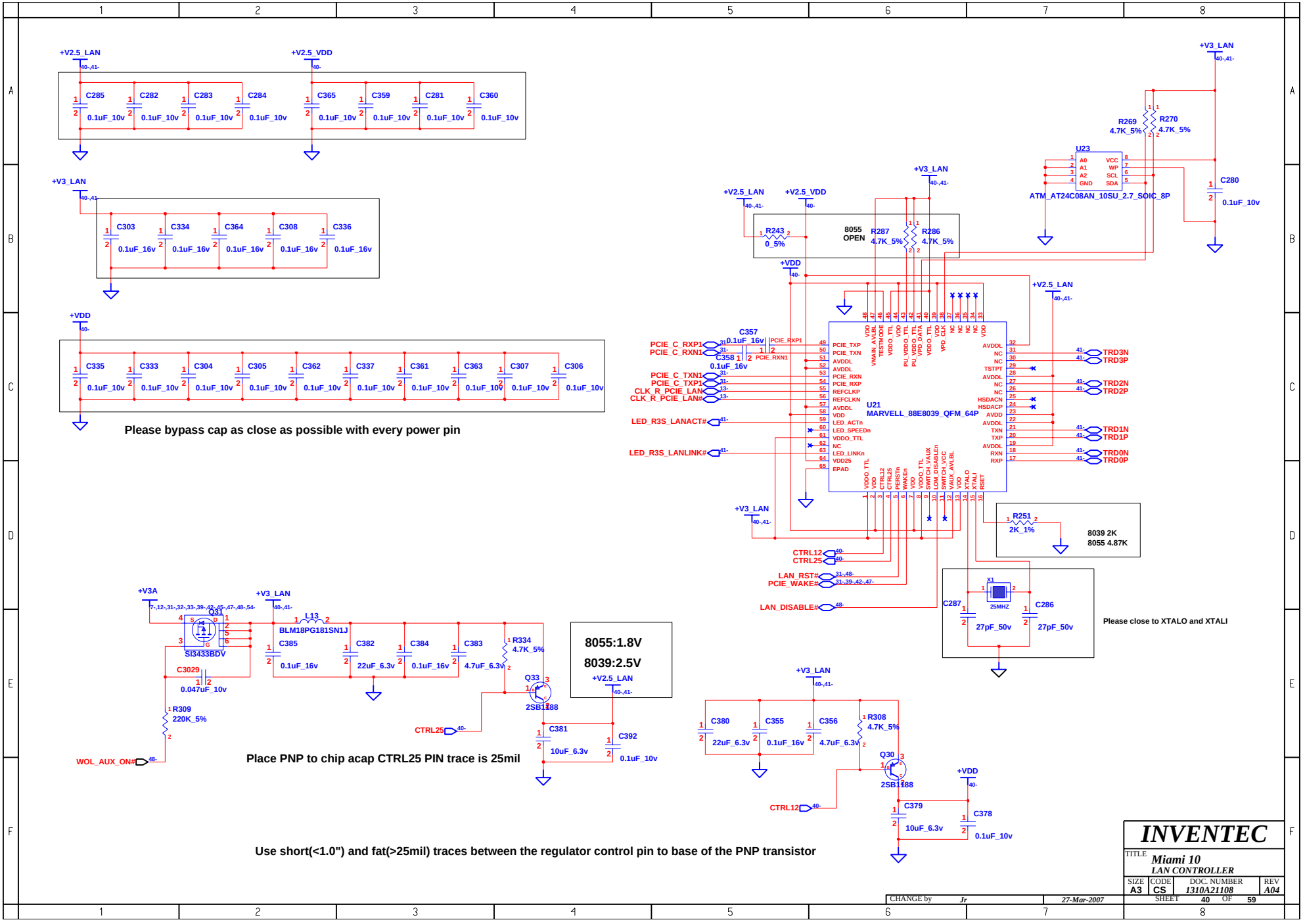
+V2.5_LAN
+V2.5_VDD
C285 C282 C283 C284 C365 C359 C281 C360
0.1uF_10v
+V3_LAN
C303 C334 C364 C308 C336
0.1uF_16v
+VDD
C335 C333 C304 C305 C362 C337 C361 C363 C307 C306
0.1uF_10v
Please bypass cap as close as possible with every power pin
R269 4.7K_5%
R270 4.7K_5%
U23
ATM_AT24C08AN_10SU_2.7_SOIC_8P
C280
0.1uF_10v
R243 0_5%
8055 OPEN
R287 4.7K_5%
R286 4.7K_5%
C357 0.1uF_16v
C358 0.1uF_16v
PCIE_C_RXP1
PCIE_C_RXN1
PCIE_C_TXN1
PCIE_C_TXP1
CLK_R_PCIE_LAN
CLK_R_PCIE_LAN#
LED_R3S_LANACT#
LED_R3S_LANLINK#
U21
MARVELL_88E8039_QFM_64P
TRD3N
TRD3P
TRD2N
TRD2P
TRD1N
TRD1P
TRD0N
TRD0P
R251 2K_1%
8039 2K
8055 4.87K
CTRL12
CTRL25
LAN_RST#
PCIE_WAKE#
LAN_DISABLE#
X1 25MHZ
C287 27pF_50v
C286 27pF_50v
Please close to XTALO and XTALI
+V3A
Q31 SI3433BDV
L13 BLM18PG181SN1J
C385 0.1uF_16v
C382 22uF_6.3v
C384 0.1uF_16v
C383 4.7uF_6.3v
R334 4.7K_5%
C3029 0.047uF_10v
R309 220K_5%
WOL_AUX_ON#
Q33 2SB1188
CTRL25
C381 10uF_6.3v
C392 0.1uF_10v
8055:1.8V
8039:2.5V
Place PNP to chip acap CTRL25 PIN trace is 25mil
C380 22uF_6.3v
C355 0.1uF_16v
C356 4.7uF_6.3v
R308 4.7K_5%
Q30 2SB1188
CTRL12
C379 10uF_6.3v
C378 0.1uF_10v
Use short(<1.0") and fat(>25mil) traces between the regulator control pin to base of the PNP transistor
INVENTEC
TITLE Miami 10
LAN CONTROLLER
SIZE A3
CODE CS
DOC. NUMBER 1310A21108
REV A04
SHEET 40 OF 59
CHANGE by Jr
27-Mar-2007

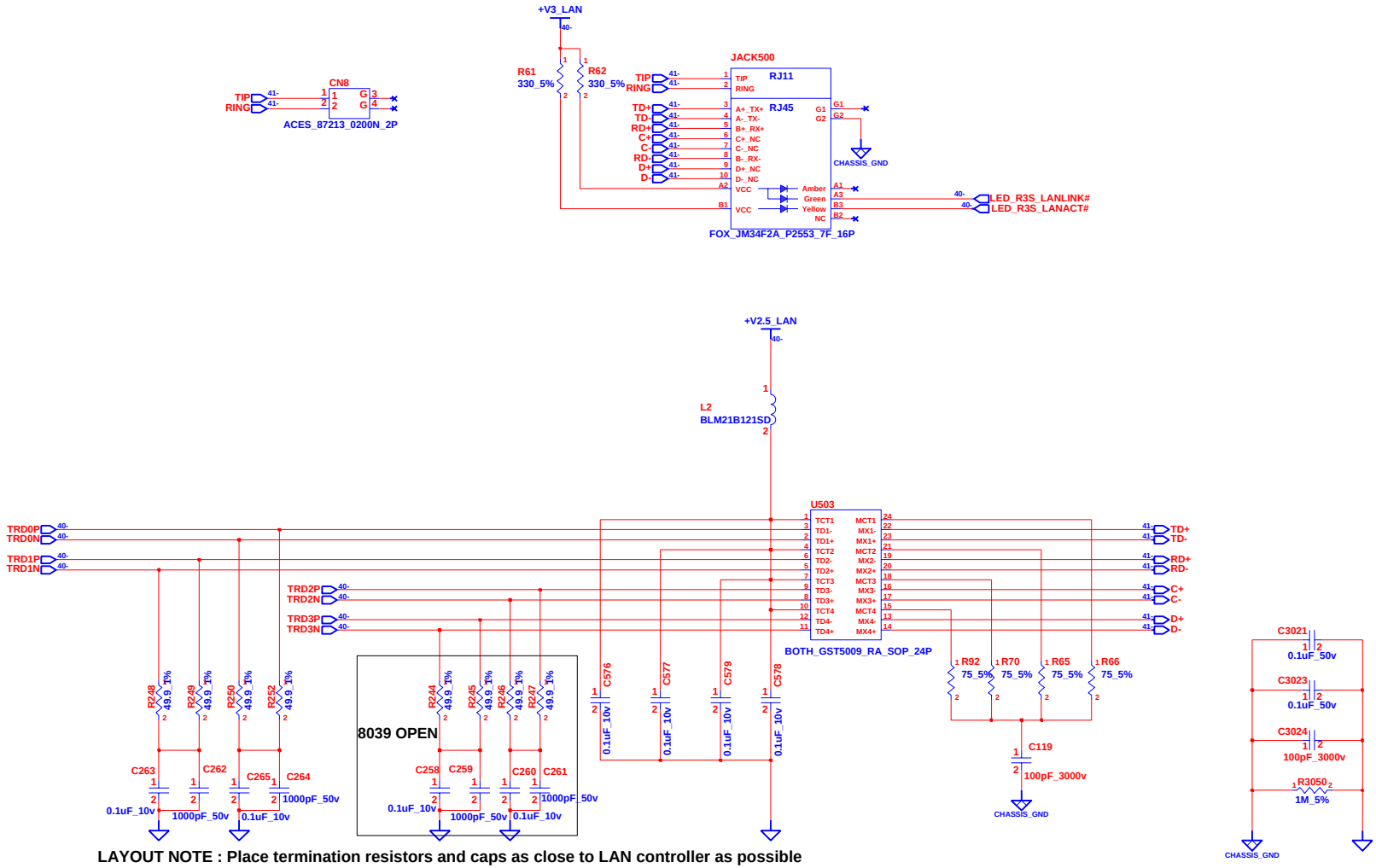

LAYOUT NOTE : Place termination resistors and caps as close to LAN controller as possible

INVENTEC

TITLE
Miami 10
RJ11 / RJ45 & TRANSFORMER

SIZE	CODE	DOC. NUMBER	REV
A3	CS	1310A21108	A04

SHEET 41 OF 59

CHANGE by Jr 27-Mar-2007

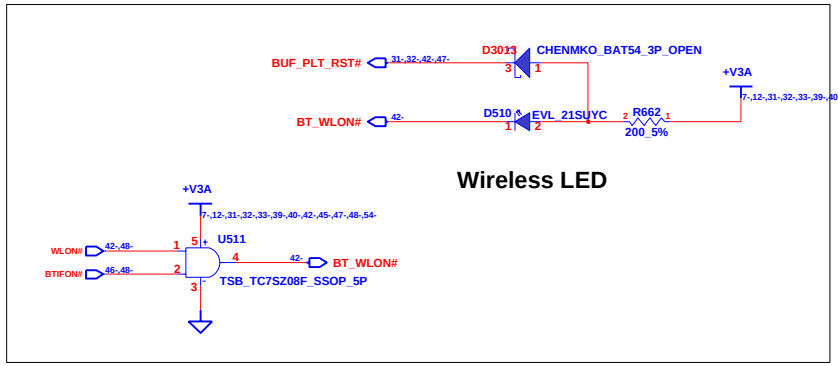

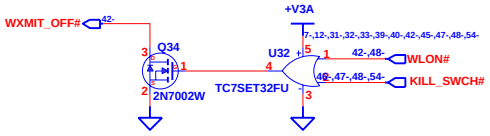

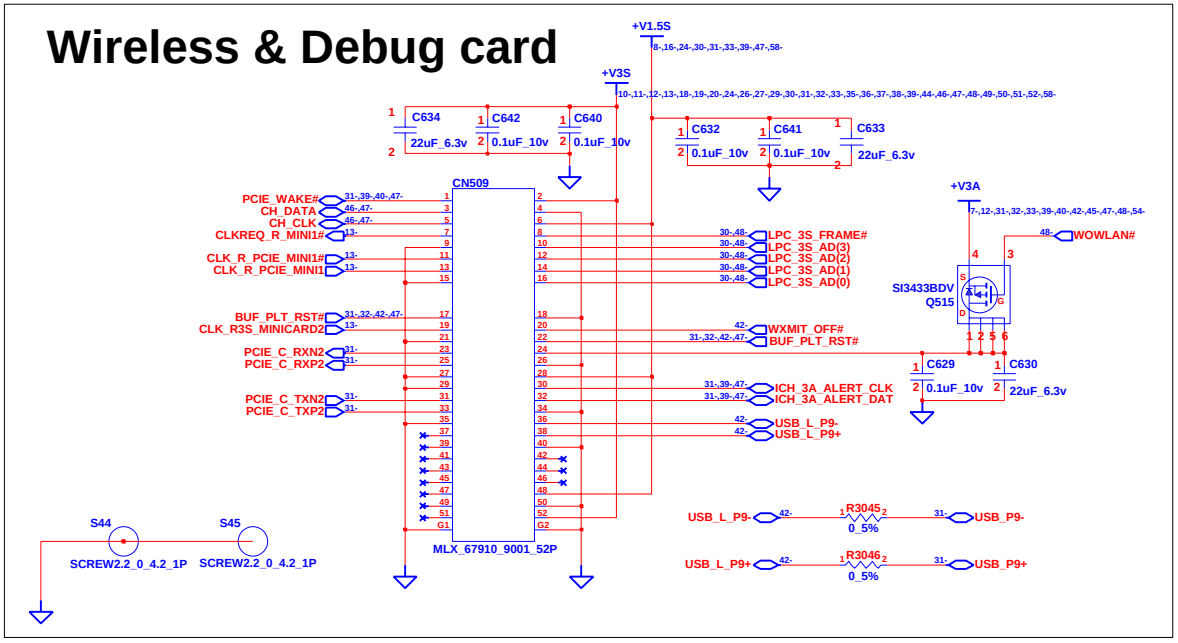

CHANGE by	Jr	27-Mar-2007	

INVENTEC

TITLE *Miami 10*
Wireless LAN

SIZE	CODE	DOC. NUMBER	REV
A3	CS	1310A21108	A04

SHEET 42 OF 59

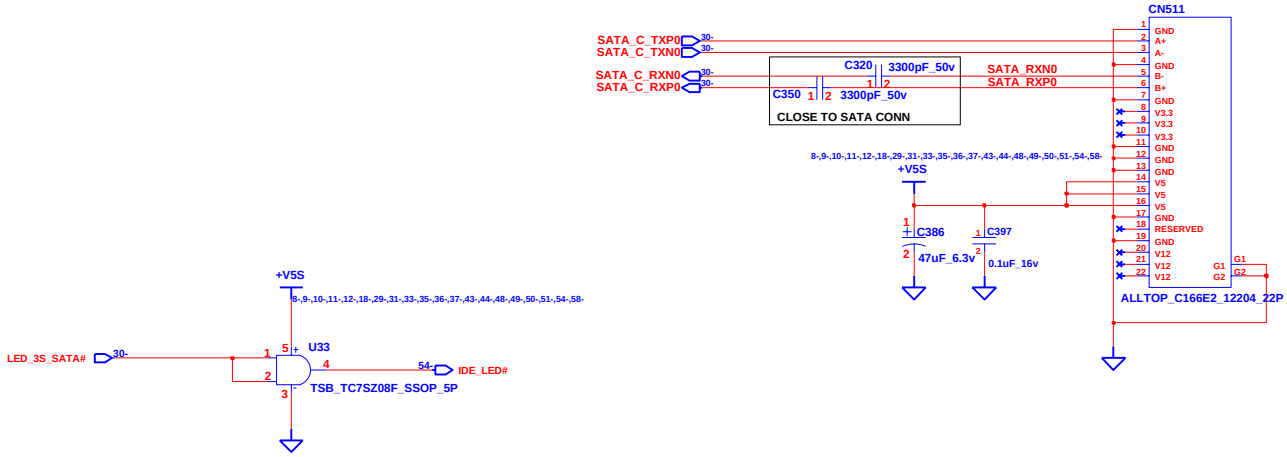

INVENTEC			
TITLE Miami 10 SATA HDD CONM			
SIZE A3	CODE CS	DOC. NUMBER 1310A21108	REV A04
CHANGE by Jr	27-Mar-2007	SHEET 43 OF 59	

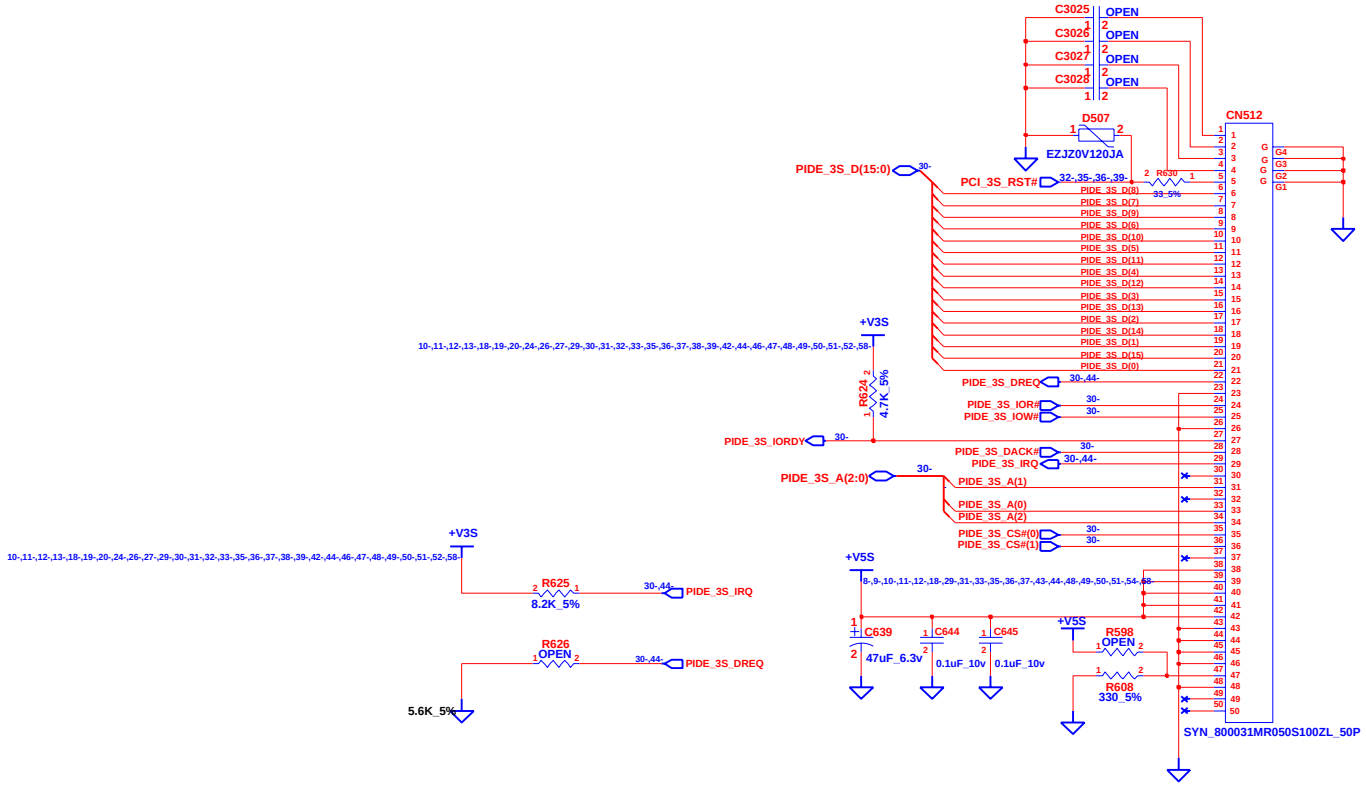

CHANGE by	Jr	27-Mar-2007	

INVENTEC

TITLE *Miami 10*
ODD

SIZE	CODE	DOC. NUMBER	REV
A3	CS	1310A21108	A04

SHEET 44 OF 59

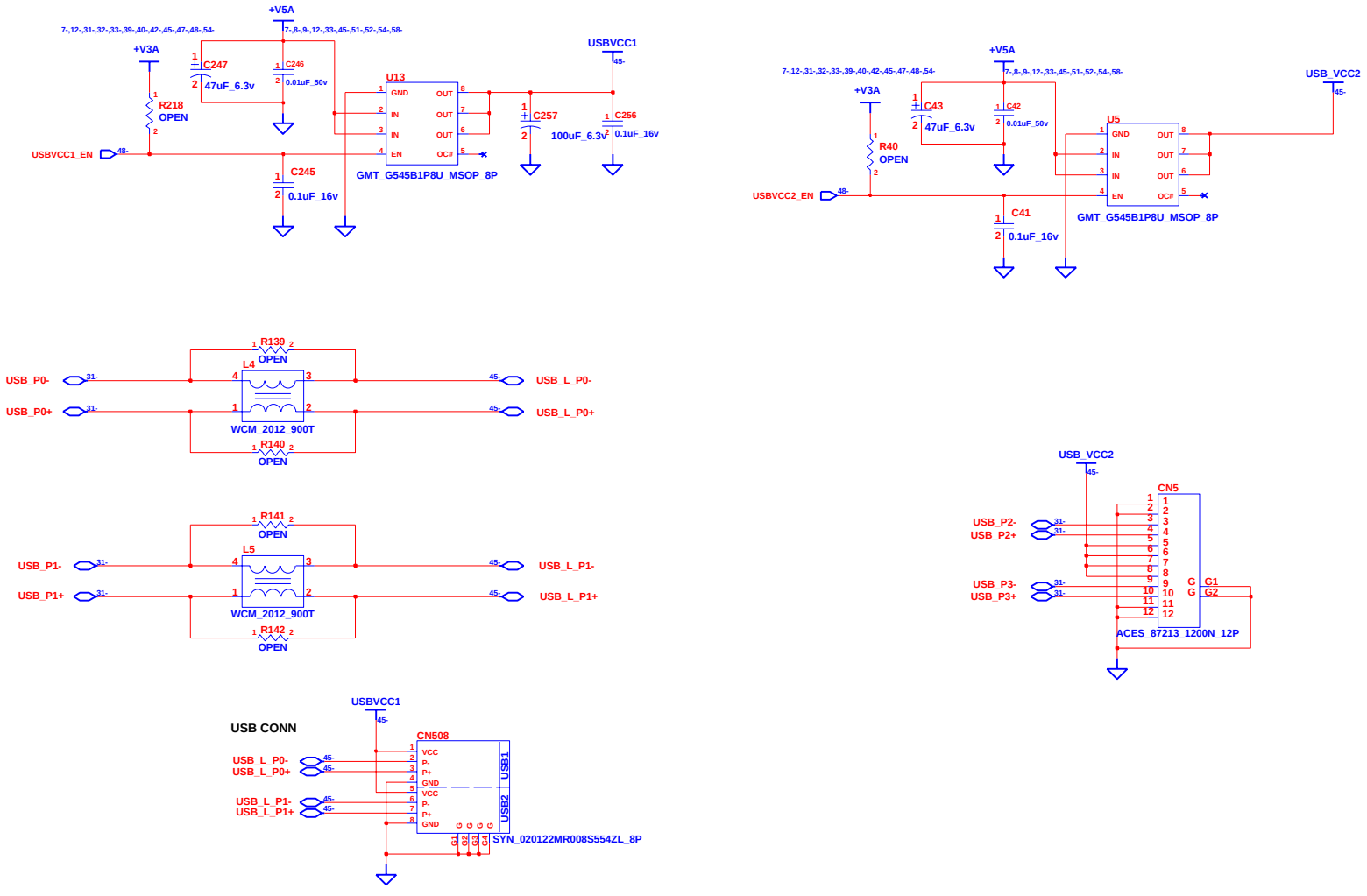

INVENTEC

TITLE *Miami 10*
USB CONN

SIZE	CODE	DOC. NUMBER	REV
A3	CS	*1310A21108*	*A04*

CHANGE by *Jr* *27-Mar-2007*

SHEET 45 OF 59

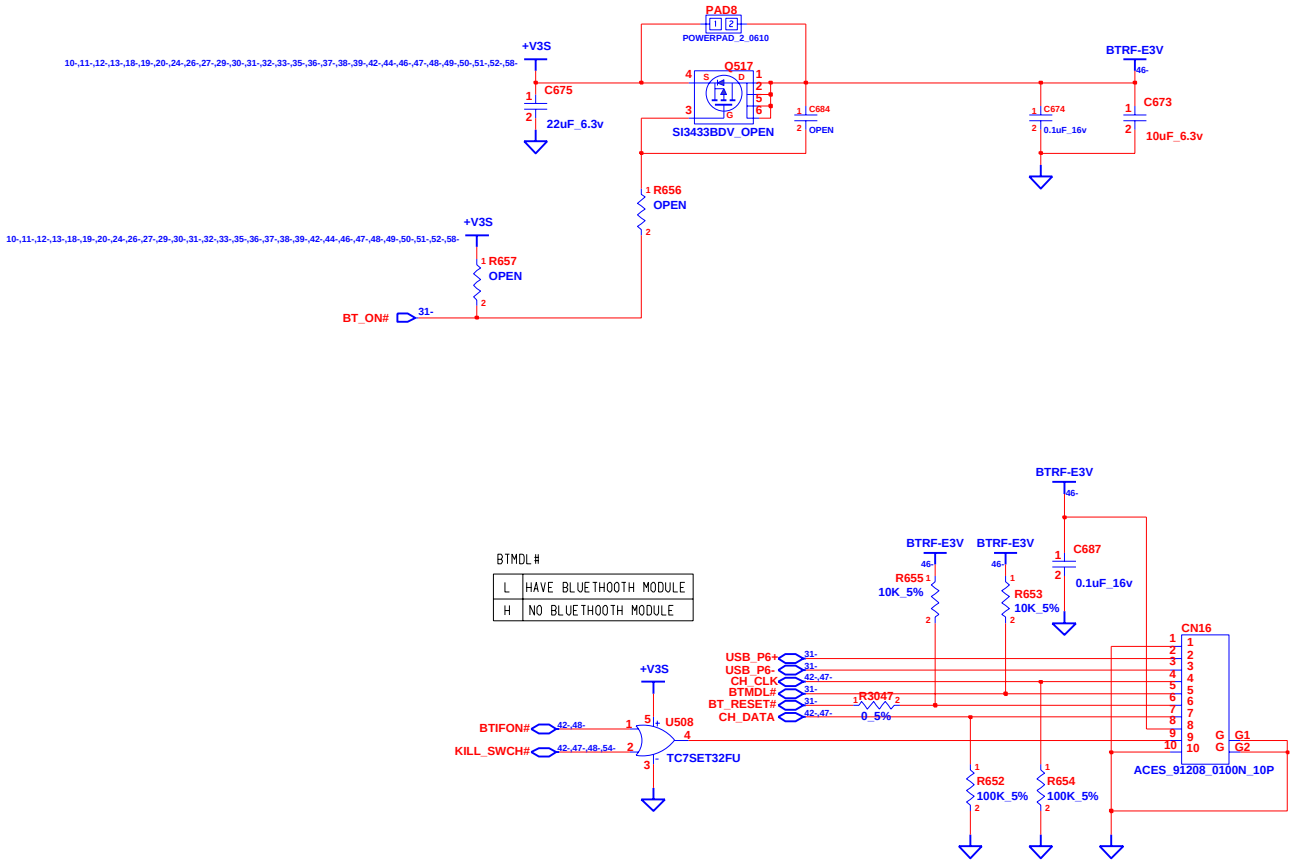

INVENTEC

TITLE **Miami 10**
BLUETOOTH

SIZE	CODE	DOC. NUMBER	REV
A3	CS	1310A21108	A04

SHEET 46 OF 59

CHANGE by Jr 27-Mar-2007

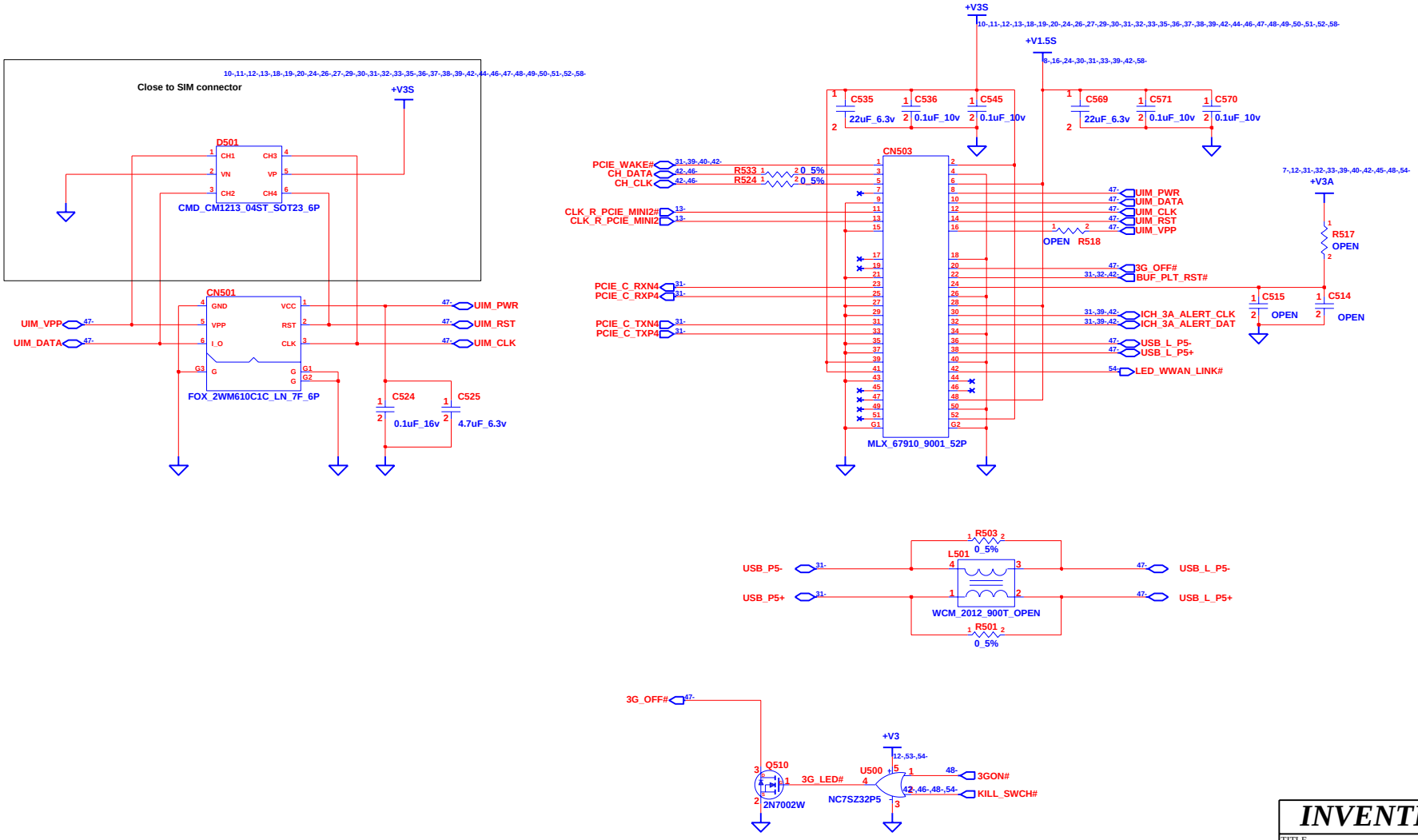

INVENTEC

TITLE
Miami 10
SIM CARD & 3G CONN

SIZE	CODE	DOC. NUMBER	REV
A3	CS	1310A21108	A04

SHEET 47 OF 59

CHANGE by Jr 27-Mar-2007

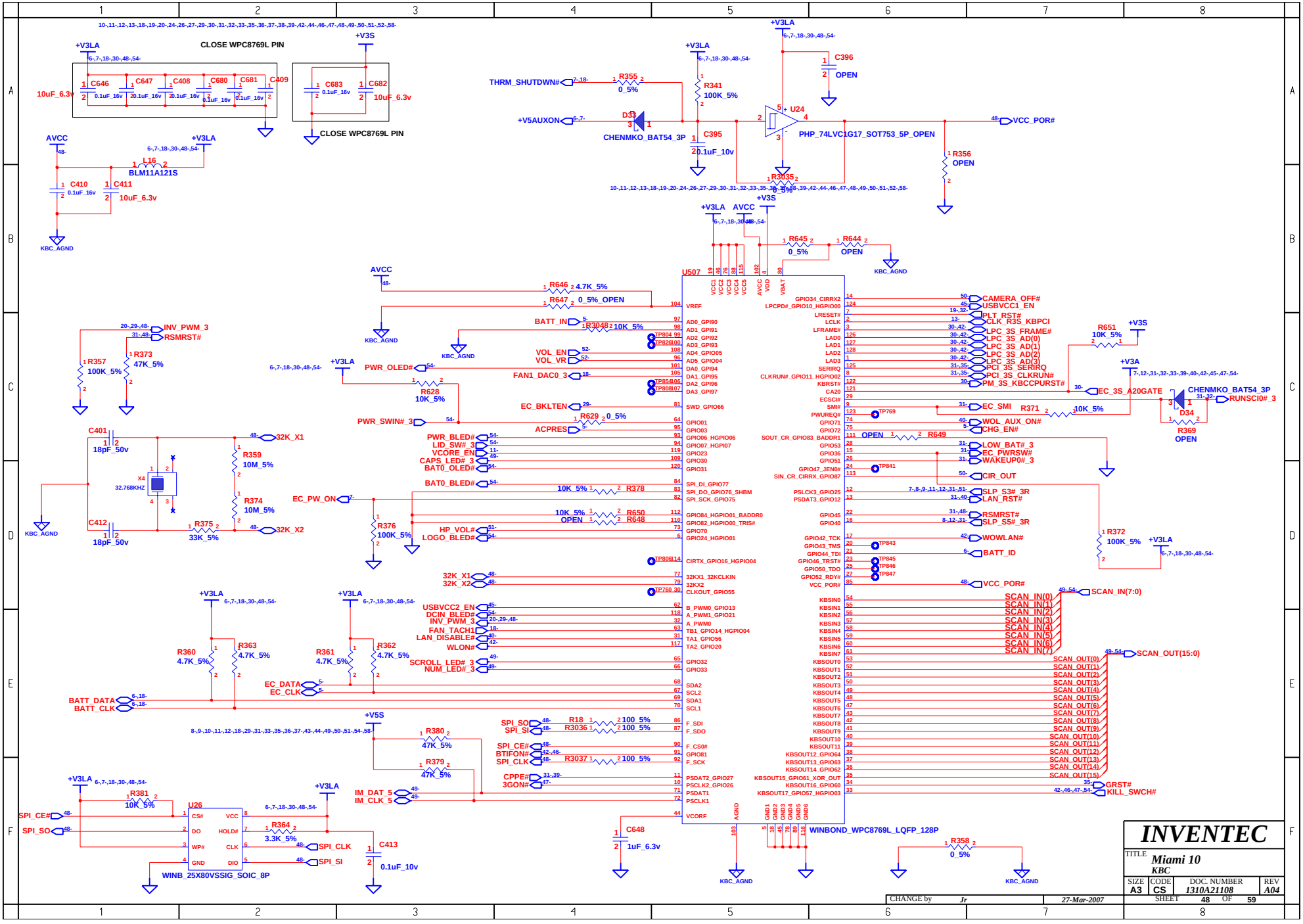
CLOSE WPC8769L PIN
+V3LA
+V3S
C646
C647
C408
C680
C681
C409
C683
C682
10uF_6.3v
0.1uF_16v
20.1uF_16v
CLOSE WPC8769L PIN
AVCC
L16
BLM11A121S
C410
C411
KBC_AGND
THRM_SHUTDWN#
R355
0_5%
R341
100K_5%
+V5AUXON
D33
CHENMKO_BAT54_3P
C395
0.1uF_10v
U24
PHP_74LVC1G17_SOT753_5P_OPEN
VCC_POR#
C396
OPEN
R356
OPEN
R3035
0_5%
R645
0_5%
R644
OPEN
U507
R646
4.7K_5%
R647
0_5%_OPEN
BATT_IN
R3048
10K_5%
VREF
AD0_GPI90
AD1_GPI91
AD2_GPI92
AD3_GPI93
AD4_GPIO05
AD5_GPIO04
DA0_GPI94
DA1_GPI95
DA2_GPI96
DA3_GPI97
SWD_GPIO66
GPIO01
GPIO03
GPIO06_HGPIO06
GPIO07_HGPI07
GPIO23
GPIO30
GPIO31
SPI_DI_GPIO77
SPI_DO_GPIO76_SHBM
SPI_SCK_GPIO75
GPIO84_HGPIO01_BADDR0
GPIO82_HGPIO00_TRIS#
GPIO70
GPIO24_HGPIO01
CIRTX_GPIO16_HGPIO04
32KX1_32KCLKIN
32KX2
CLKOUT_GPIO55
B_PWM0_GPIO13
A_PWM1_GPIO21
A_PWM0
TB1_GPIO14_HGPIO04
TA1_GPIO56
TA2_GPIO20
GPIO32
GPIO33
SDA2
SCL2
SDA1
SCL1
F_SDI
F_SDO
F_CS0#
GPIO81
F_SCK
PSDAT2_GPIO27
PSCLK2_GPIO26
PSDAT1
PSCLK1
VCORF
GPIO34_CIRRX2
LPCPD#_GPIO10_HGPIO00
LRESET#
LCLK
LFRAME#
LAD0
LAD1
LAD2
LAD3
SERIRQ
CLKRUN#_GPIO11_HGPIO02
KBRST#
CA20
ECSC#
SMI#
PWUREQ#
GPIO71
GPIO72
SOUT_CR_GPIO83_BADDR1
GPIO53
GPIO36
GPIO51
GPIO47_JEN0#
SIN_CR_CIRRX_GPIO87
PSLCK3_GPIO25
PSDAT3_GPIO12
GPIO45
GPIO40
GPIO42_TCK
GPIO43_TMS
GPIO44_TDI
GPIO46_TRST#
GPIO50_TDO
GPIO52_RDY#
VCC_POR#
KBSIN0
KBSIN1
KBSIN2
KBSIN3
KBSIN4
KBSIN5
KBSIN6
KBSIN7
KBSOUT0
KBSOUT1
KBSOUT2
KBSOUT3
KBSOUT4
KBSOUT5
KBSOUT6
KBSOUT7
KBSOUT8
KBSOUT9
KBSOUT10
KBSOUT11
KBSOUT12_GPIO64
KBSOUT13_GPIO63
KBSOUT14_GPIO62
KBSOUT15_GPIO61_XOR_OUT
KBSOUT16_GPIO60
KBSOUT17_GPIO57_HGPIO03
WINBOND_WPC8769L_LQFP_128P
CAMERA_OFF#
USBVCC1_EN
PLT_RST#
CLK_R3S_KBPCI
LPC_3S_FRAME#
LPC_3S_AD(0)
LPC_3S_AD(1)
LPC_3S_AD(2)
LPC_3S_AD(3)
PCI_3S_SERIRQ
PCI_3S_CLKRUN#
PM_3S_KBCCPURST#
EC_SMI
WOL_AUX_ON#
CHG_EN#
LOW_BAT#_3
EC_PWRSW#
WAKEUP0#_3
CIR_OUT
SLP_S3#_3R
LAN_RST#
RSMRST#
SLP_S5#_3R
WOWLAN#
BATT_ID
SCAN_IN(0)
SCAN_IN(1)
SCAN_IN(2)
SCAN_IN(3)
SCAN_IN(4)
SCAN_IN(5)
SCAN_IN(6)
SCAN_IN(7)
SCAN_IN(7:0)
SCAN_OUT(0)
SCAN_OUT(1)
SCAN_OUT(2)
SCAN_OUT(3)
SCAN_OUT(4)
SCAN_OUT(5)
SCAN_OUT(6)
SCAN_OUT(7)
SCAN_OUT(8)
SCAN_OUT(9)
SCAN_OUT(10)
SCAN_OUT(11)
SCAN_OUT(12)
SCAN_OUT(13)
SCAN_OUT(14)
SCAN_OUT(15)
SCAN_OUT(15:0)
GRST#
KILL_SWCH#
INV_PWM_3
RSMRST#
R357
100K_5%
R373
47K_5%
PWR_OLED#
R628
10K_5%
VOL_EN
VOL_VR
FAN1_DAC0_3
EC_BKLTEN
R629
0_5%
PWR_SWIN#_3
ACPRES
PWR_BLED#
LID_SW#_3
VCORE_EN
CAPS_LED#_3
BAT0_OLED#
BAT0_BLED#
R378
10K_5%
EC_PW_ON
R650
10K_5%
R648
OPEN
HP_VOL#
LOGO_BLED#
R376
100K_5%
32K_X1
32K_X2
C401
18pF_50v
C412
18pF_50v
X4
32.768KHZ
R359
10M_5%
R374
10M_5%
R375
33K_5%
USBVCC2_EN
DCIN_BLED#
INV_PWM_3
FAN_TACH1
LAN_DISABLE#
WLON#
SCROLL_LED#_3
NUM_LED#_3
R360
4.7K_5%
R363
4.7K_5%
R361
4.7K_5%
R362
4.7K_5%
EC_DATA
EC_CLK
BATT_DATA
BATT_CLK
R380
47K_5%
R379
47K_5%
SPI_SO
SPI_SI
R18
100_5%
R3036
100_5%
SPI_CE#
BTIFON#
SPI_CLK
R3037
100_5%
CPPE#
3GON#
IM_DAT_5
IM_CLK_5
R381
10K_5%
U26
CS#
DO
WP#
GND
VCC
HOLD#
CLK
DIO
R364
3.3K_5%
C413
0.1uF_10v
WINB_25X80VSSIG_SOIC_8P
C648
1uF_6.3v
R651
10K_5%
+V3A
EC_3S_A20GATE
CHENMKO_BAT54_3P
RUNSCI0#_3
D34
R369
OPEN
R371
10K_5%
TP769
R649
OPEN
TP841
R372
100K_5%
TP843
TP845
TP846
TP847
R358
0_5%
INVENTEC
TITLE
Miami 10
KBC
SIZE A3
CODE CS
DOC. NUMBER 1310A21108
REV A04
SHEET 48 OF 59
CHANGE by Jr
27-Mar-2007

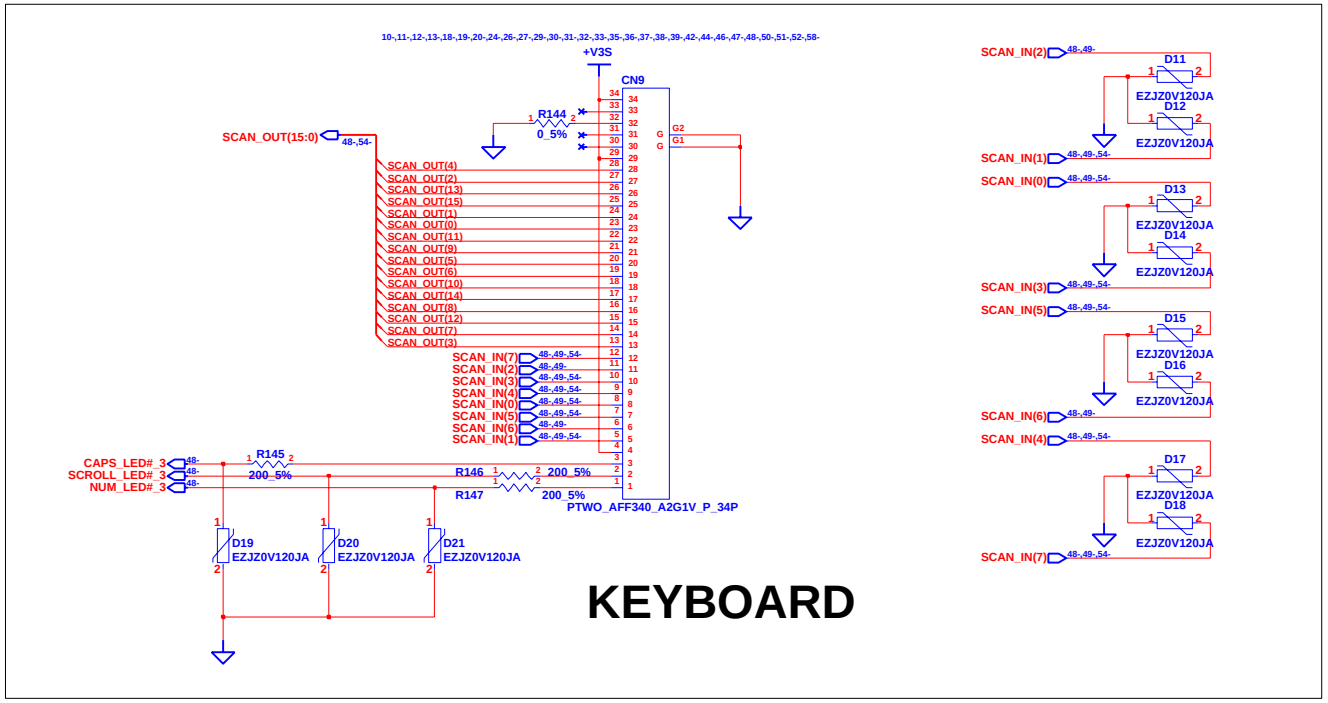

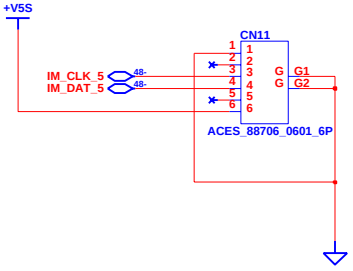

CHANGE by	Jr	27-Mar-2007	

INVENTEC

TITLE *Miami 10*
K/B & T/P CONN

SIZE	CODE	DOC. NUMBER	REV
A3	CS	*1310A21108*	*A04*

SHEET 49 OF 59

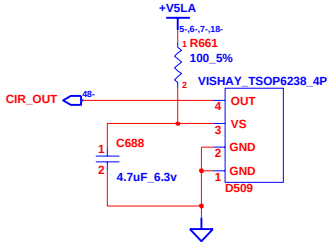

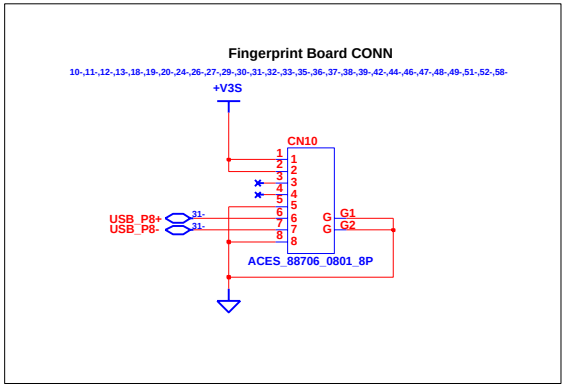

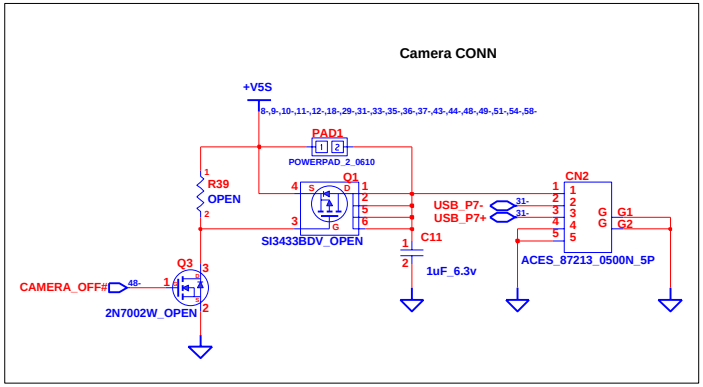

INVENTEC

TITLE
Miami 10
FINGER / CAMERA CONN & CIR

SIZE	CODE	DOC. NUMBER	REV
A3	CS	1310A21108	A04

SHEET 50 OF 59

CHANGE by Jr 27-Mar-2007

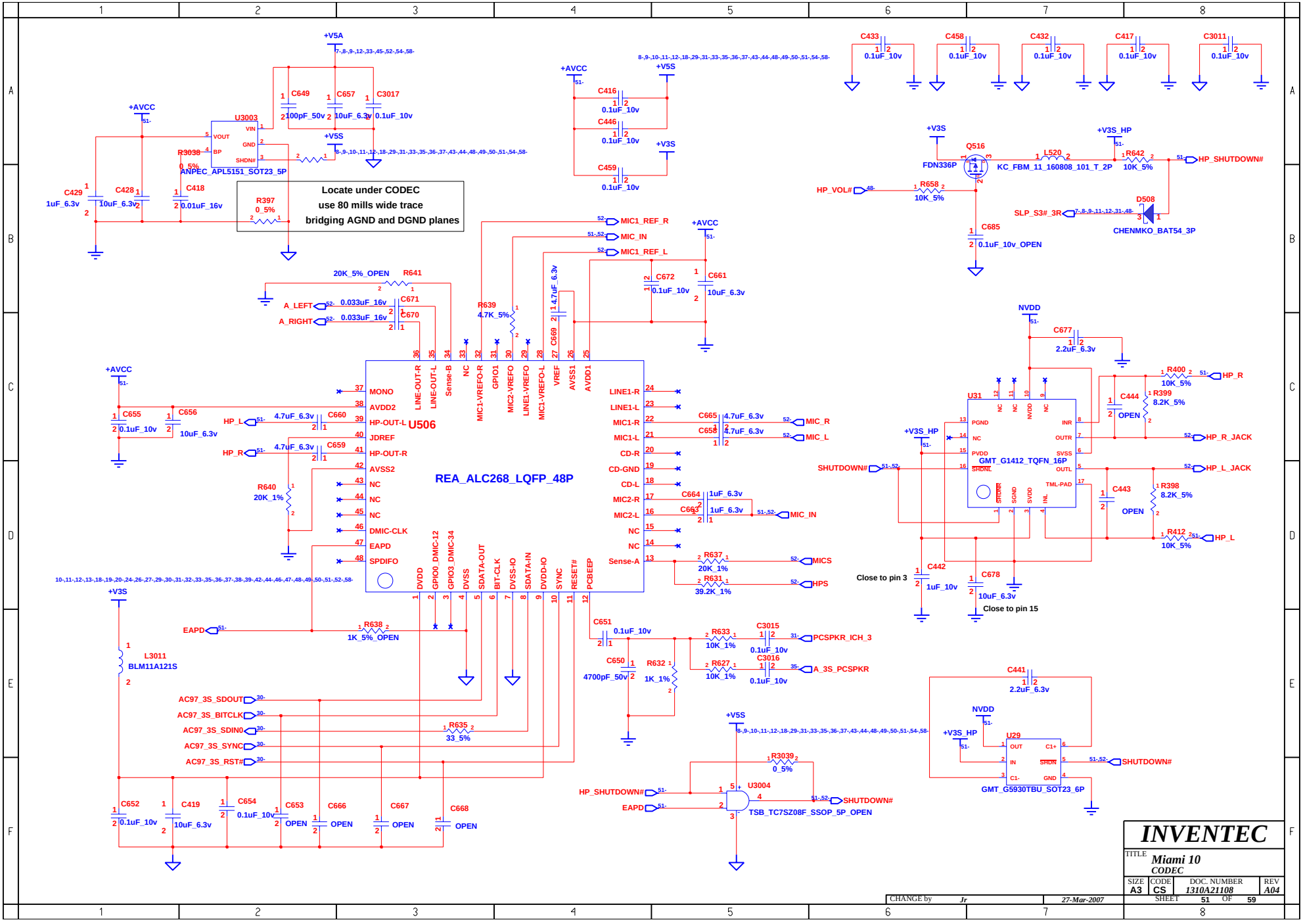
U506
REA_ALC268_LQFP_48P
U3003
ANPEC_APL5151_SOT23_5P
Locate under CODEC
use 80 mills wide trace
bridging AGND and DGND planes
U31
GMT_G1412_TQFN_16P
U29
GMT_G5930TBU_SOT23_6P
U3004
TSB_TC7SZ08F_SSOP_5P_OPEN
Q516
FDN336P
KC_FBM_11_160808_101_T_2P
CHENMKO_BAT54_3P
L3011
BLM11A121S
Close to pin 3
Close to pin 15
HP_SHUTDOWN#
SHUTDOWN#
HP_R_JACK
HP_L_JACK
HP_R
HP_L
MIC_R
MIC_L
MIC_IN
MIC1_REF_R
MIC1_REF_L
A_LEFT
A_RIGHT
MICS
HPS
PCSPKR_ICH_3
A_3S_PCSPKR
AC97_3S_SDOUT
AC97_3S_BITCLK
AC97_3S_SDIN0
AC97_3S_SYNC
AC97_3S_RST#
EAPD
HP_VOL#
SLP_S3#_3R
+V5A
+V5S
+V3S
+V3S_HP
+AVCC
NVDD
INVENTEC
TITLE Miami 10
CODEC
SIZE A3
CODE CS
DOC. NUMBER 1310A21108
REV A04
SHEET 51 OF 59
CHANGE by Jr
27-Mar-2007

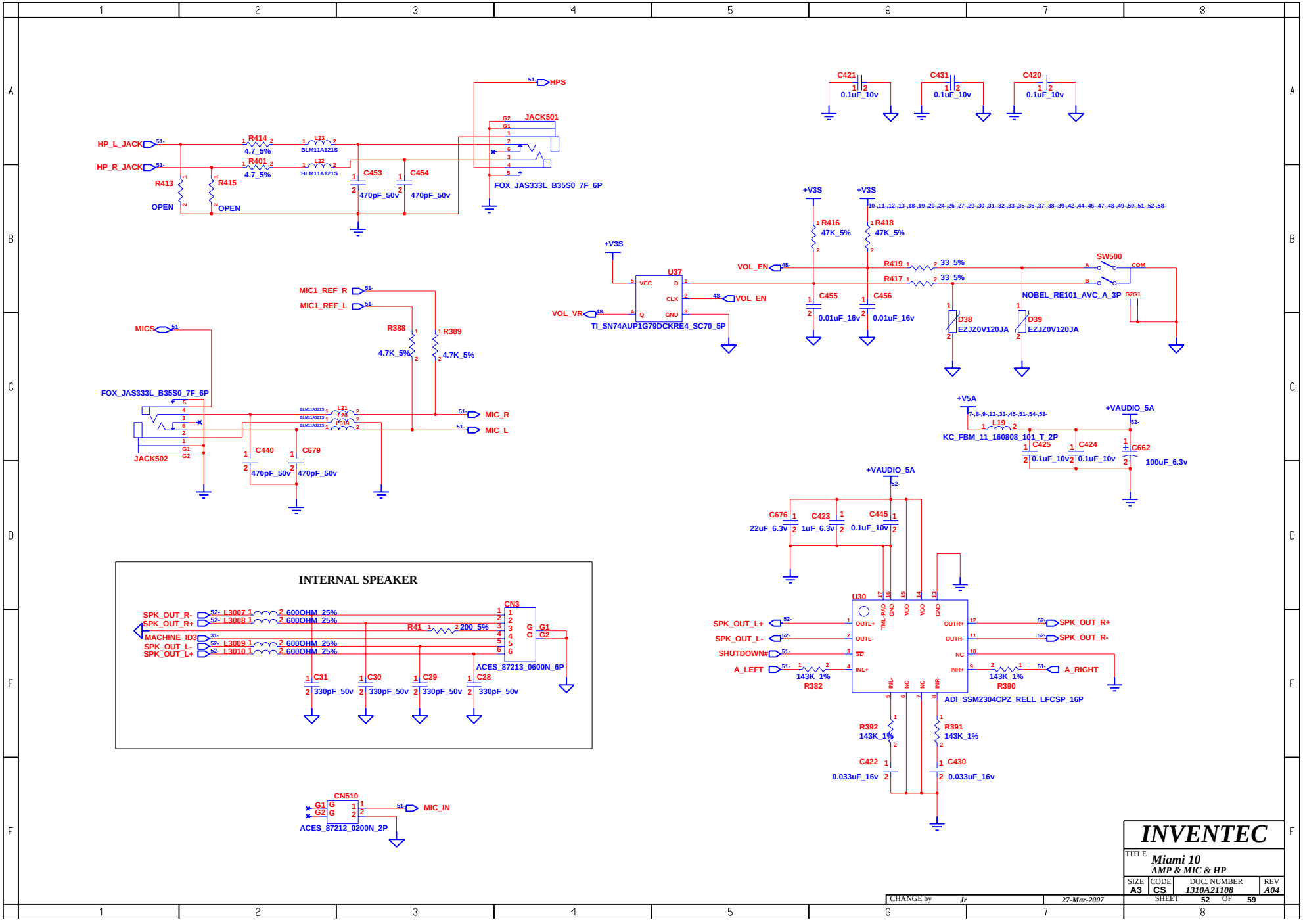
HP_L_JACK
HP_R_JACK
R414 4.7_5%
R401 4.7_5%
L23 BLM11A121S
L22 BLM11A121S
R413 OPEN
R415 OPEN
C453 470pF_50v
C454 470pF_50v
HPS
JACK501
FOX_JAS333L_B35S0_7F_6P
C421 0.1uF_10v
C431 0.1uF_10v
C420 0.1uF_10v
+V3S
R416 47K_5%
R418 47K_5%
VOL_EN
R419 33_5%
R417 33_5%
SW500
COM
NOBEL_RE101_AVC_A_3P
U37
VCC
D
CLK
GND
Q
VOL_VR
TI_SN74AUP1G79DCKRE4_SC70_5P
C455 0.01uF_16v
C456 0.01uF_16v
D38 EZJZ0V120JA
D39 EZJZ0V120JA
MIC1_REF_R
MIC1_REF_L
MICS
R388 4.7K_5%
R389 4.7K_5%
FOX_JAS333L_B35S0_7F_6P
L21
L19
MIC_R
MIC_L
JACK502
C440 470pF_50v
C679 470pF_50v
+V5A
KC_FBM_11_160808_101_T_2P
+VAUDIO_5A
C425 0.1uF_10v
C424 0.1uF_10v
C662 100uF_6.3v
C676 22uF_6.3v
C423 1uF_6.3v
C445 0.1uF_10v
U30
TML-PAD
GND
VDD
OUTL+
OUTL-
SD
INL+
OUTR+
OUTR-
NC
INR+
INL-
INR-
SPK_OUT_L+
SPK_OUT_L-
SHUTDOWN#
A_LEFT
A_RIGHT
SPK_OUT_R+
SPK_OUT_R-
143K_1% R382
143K_1% R390
ADI_SSM2304CPZ_RELL_LFCSP_16P
R392 143K_1%
R391 143K_1%
C422 0.033uF_16v
C430 0.033uF_16v
INTERNAL SPEAKER
SPK_OUT_R-
SPK_OUT_R+
MACHINE_ID3
SPK_OUT_L-
SPK_OUT_L+
L3007 600OHM_25%
L3008 600OHM_25%
L3009 600OHM_25%
L3010 600OHM_25%
R41 200_5%
CN3
ACES_87213_0600N_6P
C31 330pF_50v
C30 330pF_50v
C29 330pF_50v
C28 330pF_50v
CN510
MIC_IN
ACES_87212_0200N_2P
INVENTEC
TITLE
Miami 10
AMP & MIC & HP
SIZE A3
CODE CS
DOC. NUMBER 1310A21108
REV A04
SHEET 52 OF 59
CHANGE by Jr
27-Mar-2007

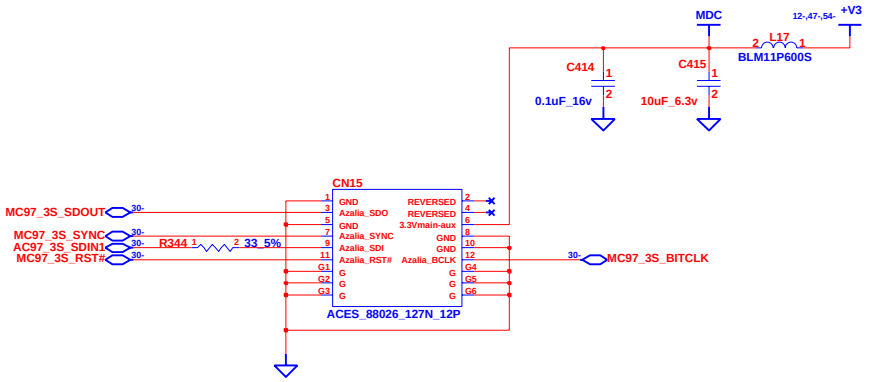

CHANGE by	Jr	27-Mar-2007	

INVENTEC

TITLE *Miami 10*
MDC1.5

SIZE	CODE	DOC. NUMBER	REV
A3	CS	1310A21108	A04

SHEET 53 OF 59

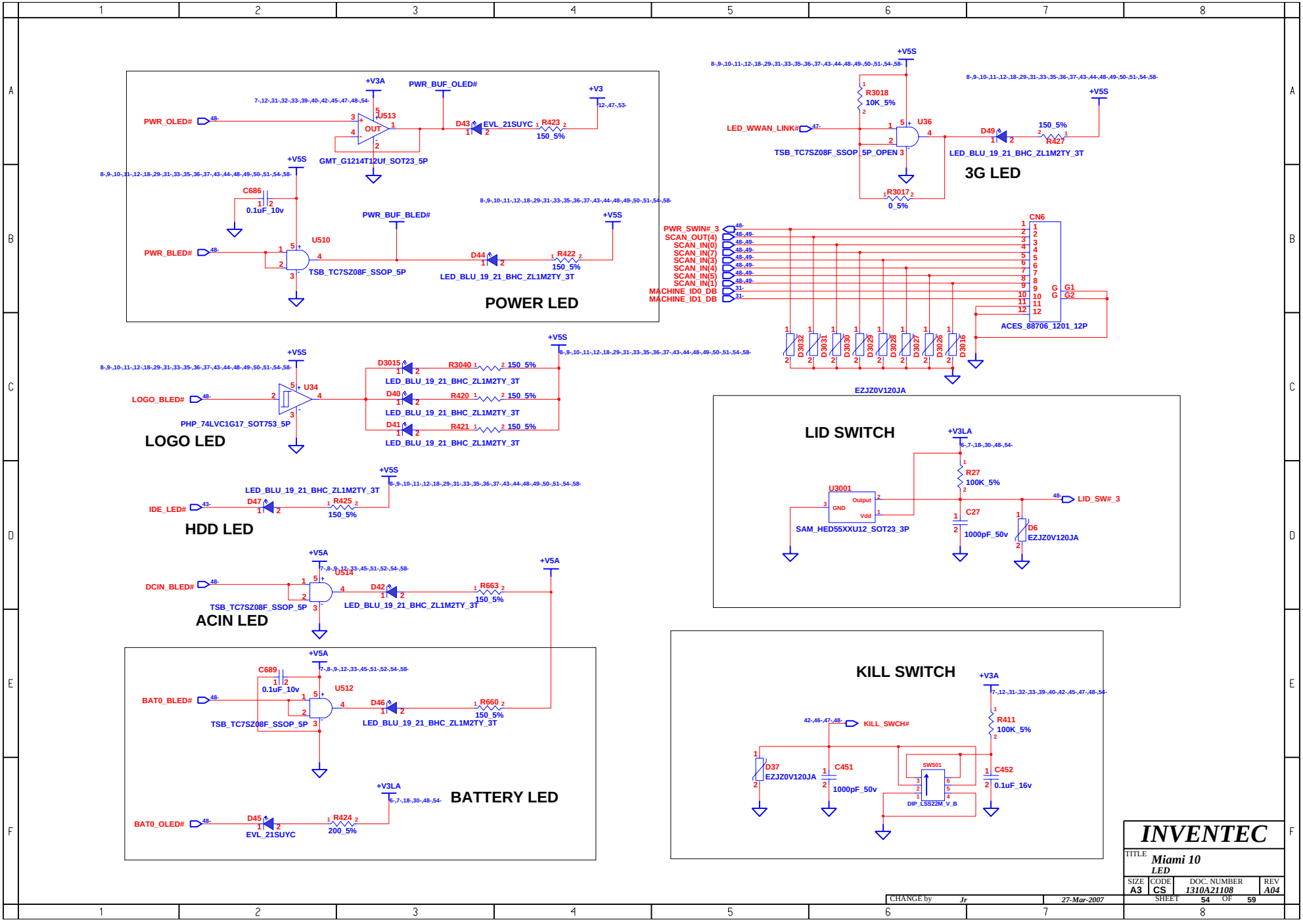
POWER LED
PWR_OLED#
PWR_BLED#
PWR_BUF_OLED#
PWR_BUF_BLED#
+V3A
+V3
+V5S
U513
U510
GMT_G1214T12Uf_SOT23_5P
TSB_TC7SZ08F_SSOP_5P
D43
D44
EVL_21SUYC
R423
R422
150_5%
LED_BLU_19_21_BHC_ZL1M2TY_3T
C686
0.1uF_10v
3G LED
LED_WWAN_LINK#
U36
R3018
10K_5%
R3017
0_5%
D49
R427
150_5%
CN6
ACES_88706_1201_12P
PWR_SWIN#_3
SCAN_OUT(4)
SCAN_IN(0)
SCAN_IN(7)
SCAN_IN(3)
SCAN_IN(4)
SCAN_IN(5)
SCAN_IN(1)
MACHINE_ID0_DB
MACHINE_ID1_DB
D3032
D3031
D3030
D3029
D3028
D3027
D3026
D3016
EZJZ0V120JA
LOGO LED
LOGO_BLED#
U34
PHP_74LVC1G17_SOT753_5P
D3015
D40
D41
R3040
R420
R421
HDD LED
IDE_LED#
D47
R425
ACIN LED
DCIN_BLED#
U514
D42
R663
BATTERY LED
BAT0_BLED#
C689
U512
D46
R660
BAT0_OLED#
D45
R424
200_5%
LID SWITCH
+V3LA
R27
100K_5%
U3001
SAM_HED55XXU12_SOT23_3P
C27
1000pF_50v
D6
LID_SW#_3
KILL SWITCH
KILL_SWCH#
R411
100K_5%
D37
C451
SW501
DIP_LSS22M_V_B
C452
0.1uF_16v
INVENTEC
TITLE
Miami 10
LED
SIZE A3
CODE CS
DOC. NUMBER 1310A21108
REV A04
SHEET 54 OF 59
CHANGE by Jr
27-Mar-2007

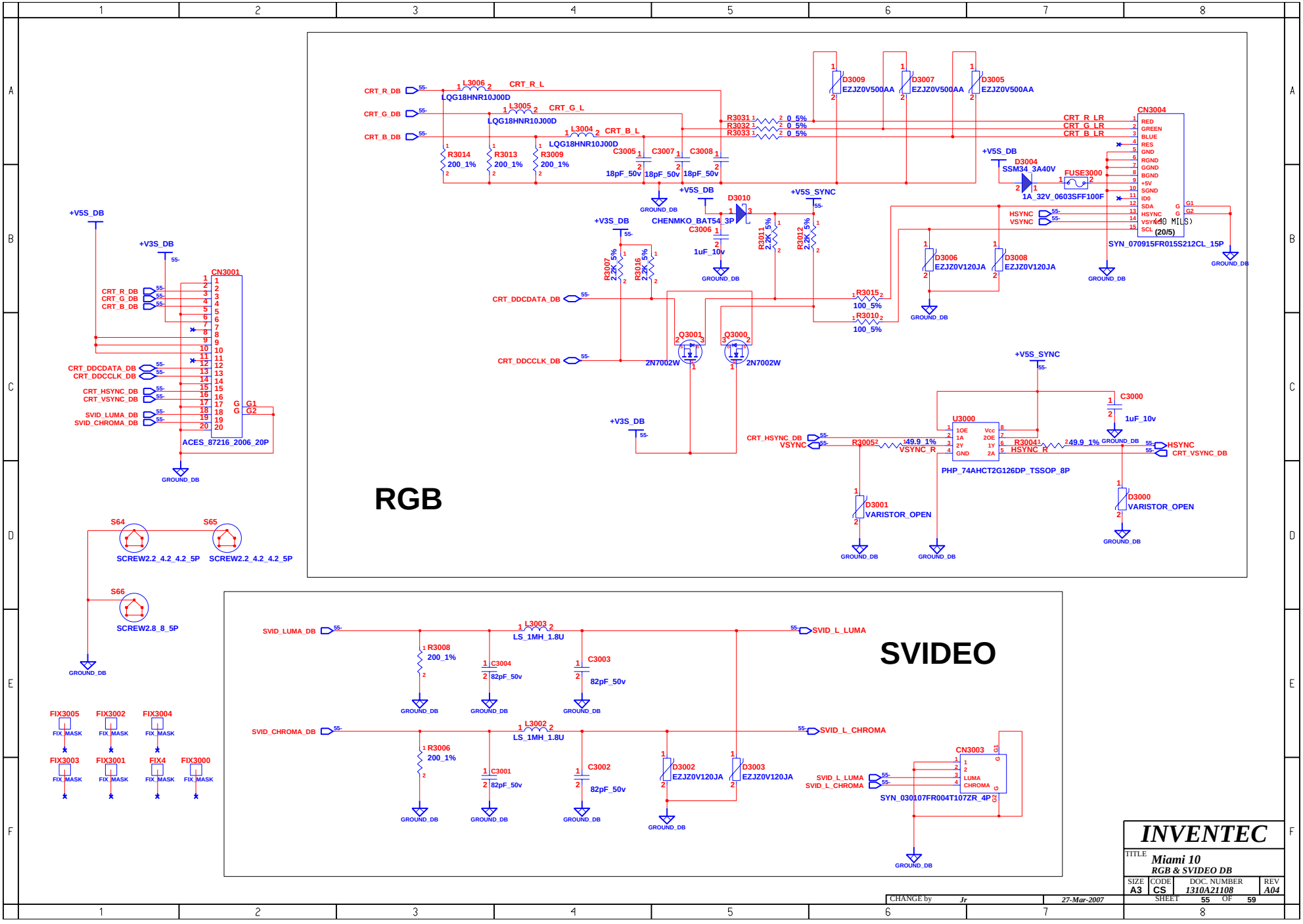
RGB
SVIDEO
CRT_R_DB
CRT_G_DB
CRT_B_DB
L3006
L3005
L3004
LQG18HNR10J00D
CRT_R_L
CRT_G_L
CRT_B_L
R3014 200_1%
R3013 200_1%
R3009 200_1%
C3005 18pF_50v
C3007 18pF_50v
C3008 18pF_50v
GROUND_DB
R3031 0_5%
R3032 0_5%
R3033 0_5%
D3009 EZJZ0V500AA
D3007 EZJZ0V500AA
D3005 EZJZ0V500AA
CRT_R_LR
CRT_G_LR
CRT_B_LR
CN3004
SYN_070915FR015S212CL_15P
+V5S_DB
D3004 SSM34_3A40V
FUSE3000 1A_32V_0603SFF100F
+V5S_SYNC
D3010 CHENMKO_BAT54_3P
C3006 1uF_10v
+V3S_DB
R3007 2.2K_5%
R3016 2.2K_5%
R3011 2.2K_5%
R3012 2.2K_5%
HSYNC
VSYNC
D3006 EZJZ0V120JA
D3008 EZJZ0V120JA
CRT_DDCDATA_DB
CRT_DDCCLK_DB
R3015 100_5%
R3010 100_5%
Q3001 2N7002W
Q3000 2N7002W
CN3001
ACES_87216_2006_20P
SVID_LUMA_DB
SVID_CHROMA_DB
CRT_HSYNC_DB
CRT_VSYNC_DB
U3000 PHP_74AHCT2G126DP_TSSOP_8P
R30052 149.9_1%
R30041 149.9_1%
VSYNC_R
HSYNC_R
C3000 1uF_10v
D3001 VARISTOR_OPEN
D3000 VARISTOR_OPEN
S64 SCREW2.2_4.2_4.2_5P
S65 SCREW2.2_4.2_4.2_5P
S66 SCREW2.8_8_5P
FIX3005 FIX3002 FIX3004 FIX3003 FIX3001 FIX4 FIX3000
FIX_MASK
L3003 LS_1MH_1.8U
L3002 LS_1MH_1.8U
R3008 200_1%
R3006 200_1%
C3004 82pF_50v
C3003 82pF_50v
C3001 82pF_50v
C3002 82pF_50v
D3002 EZJZ0V120JA
D3003 EZJZ0V120JA
SVID_L_LUMA
SVID_L_CHROMA
CN3003
SYN_030107FR004T107ZR_4P
INVENTEC
TITLE Miami 10
RGB & SVIDEO DB
SIZE A3
CODE CS
DOC. NUMBER 1310A21108
REV A04
SHEET 55 OF 59
CHANGE by Jr
27-Mar-2007

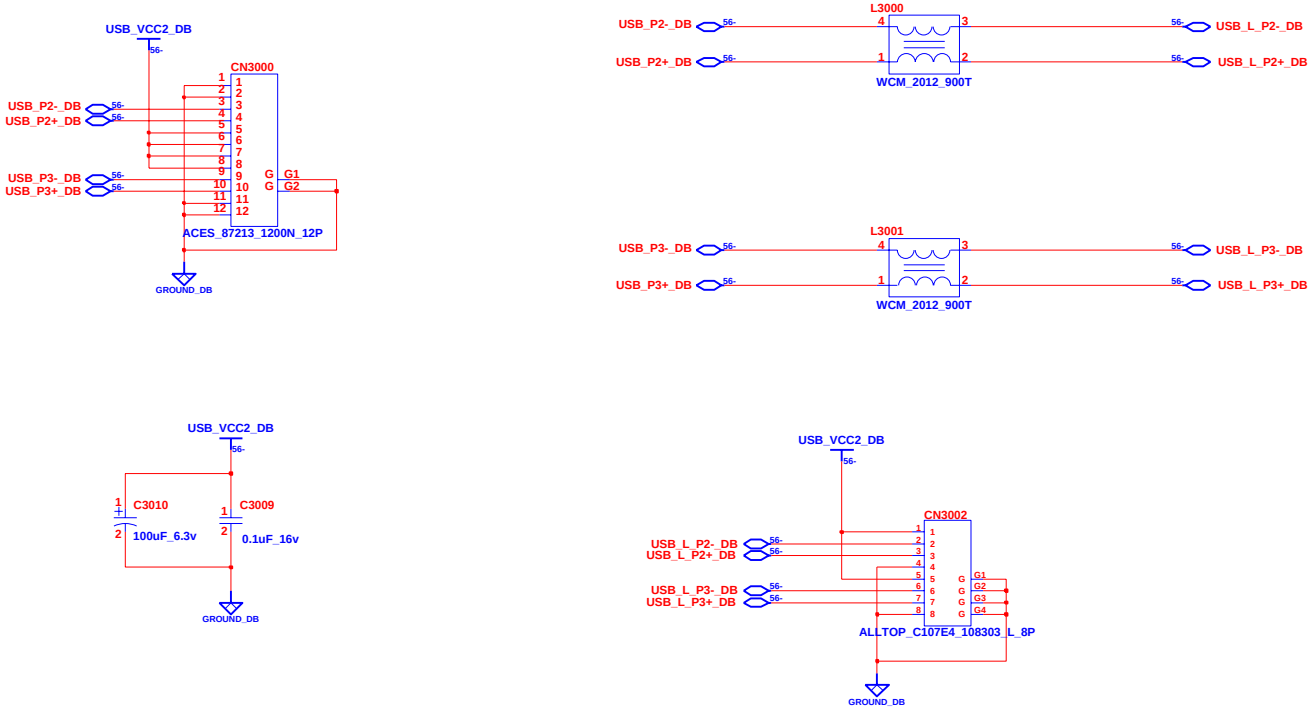

CHANGE by	Jr	27-Mar-2007	

INVENTEC

TITLE *Miami 10*
USB DB

SIZE	CODE	DOC. NUMBER	REV
A3	CS	1310A21108	A04

SHEET 56 OF 59

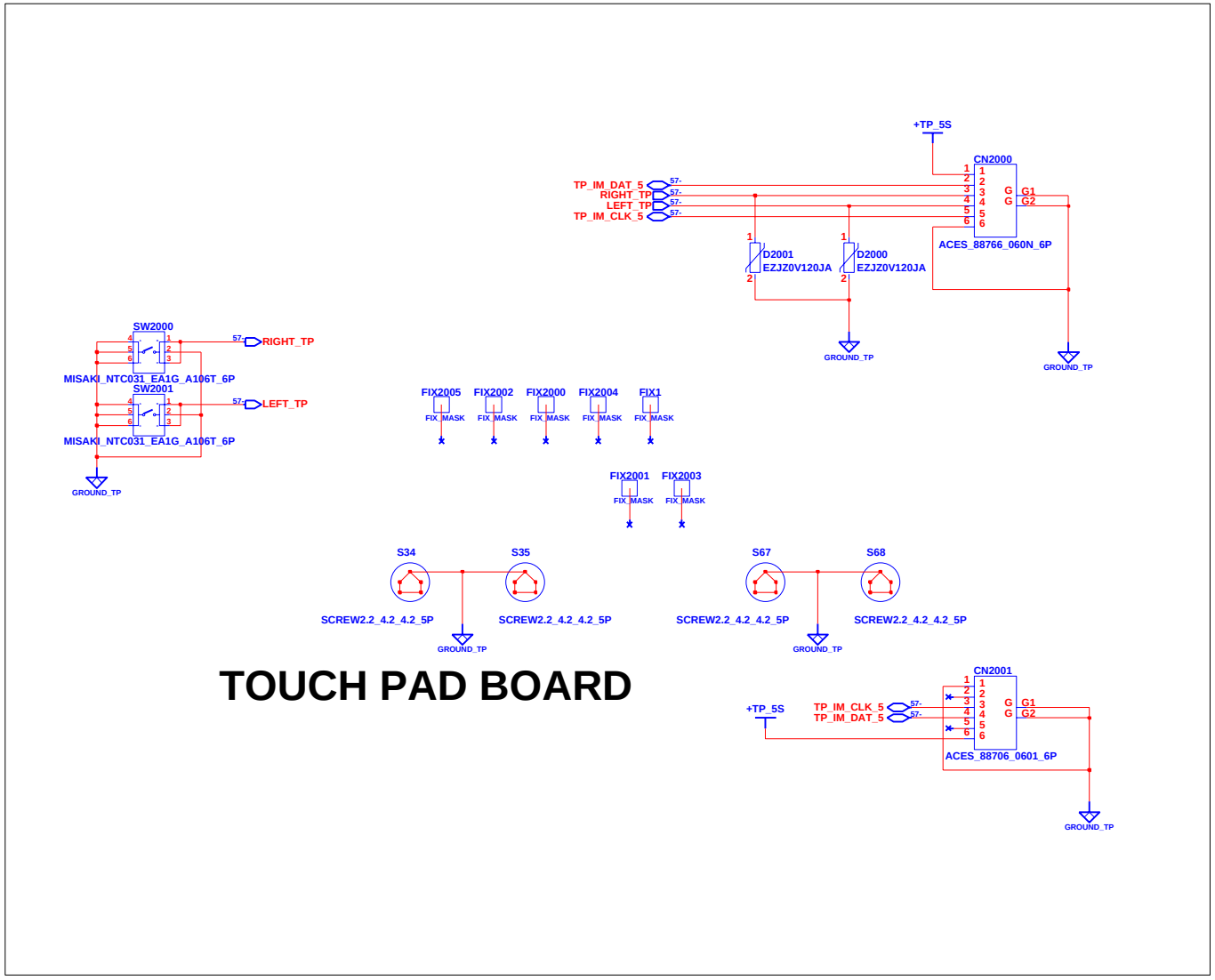

INVENTEC			
TITLE Miami 10 T/P DB			
SIZE A3	CODE CS	DOC. NUMBER 1310A21108	REV A04
CHANGE by Jr	27-Mar-2007	SHEET 57 OF 59	

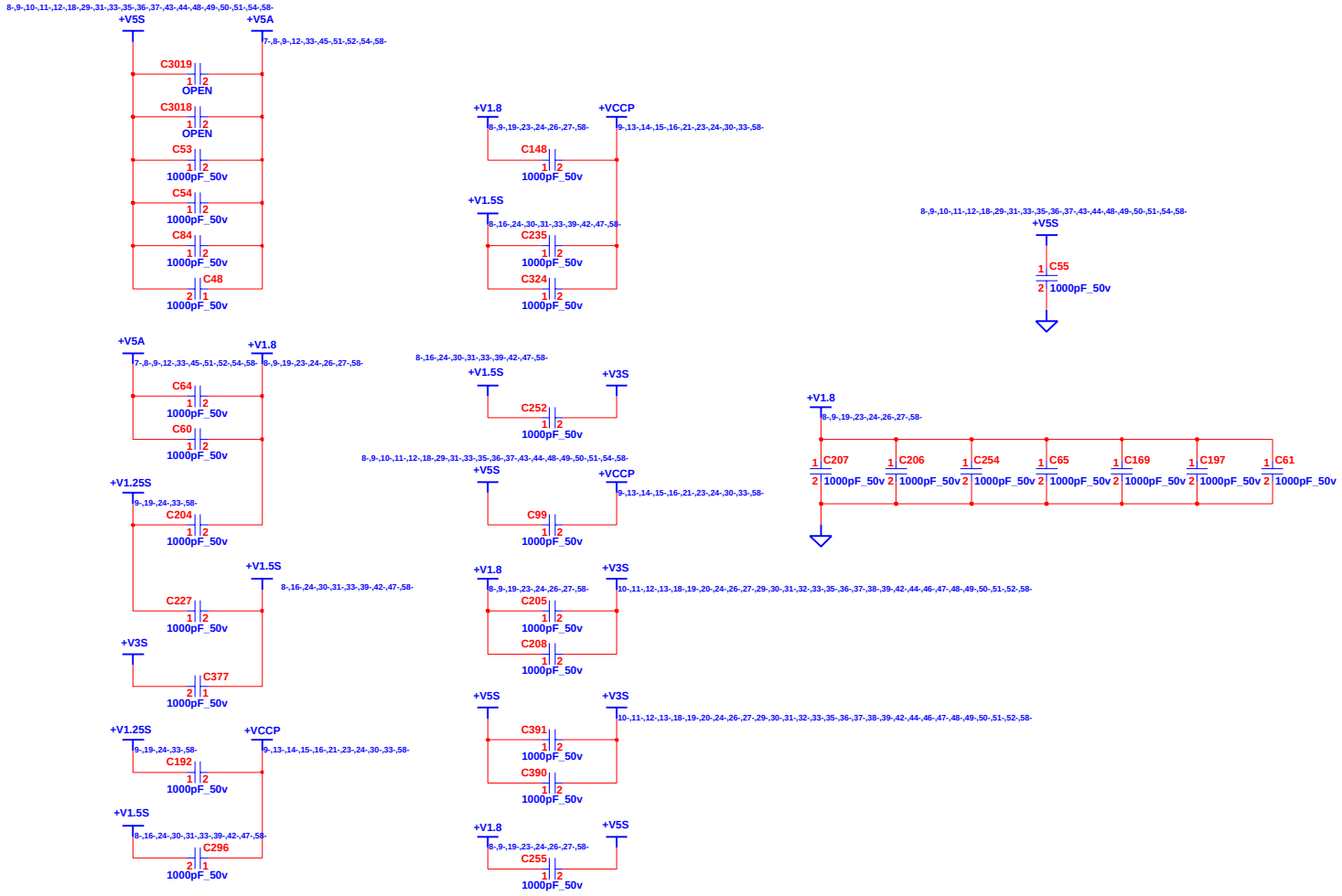

INVENTEC

TITLE *Miami 10*
EMI

SIZE	CODE	DOC. NUMBER	REV
A3	CS	*1310A21108*	*A04*

SHEET 58 OF 59

CHANGE by *Jr* *27-Mar-2007*

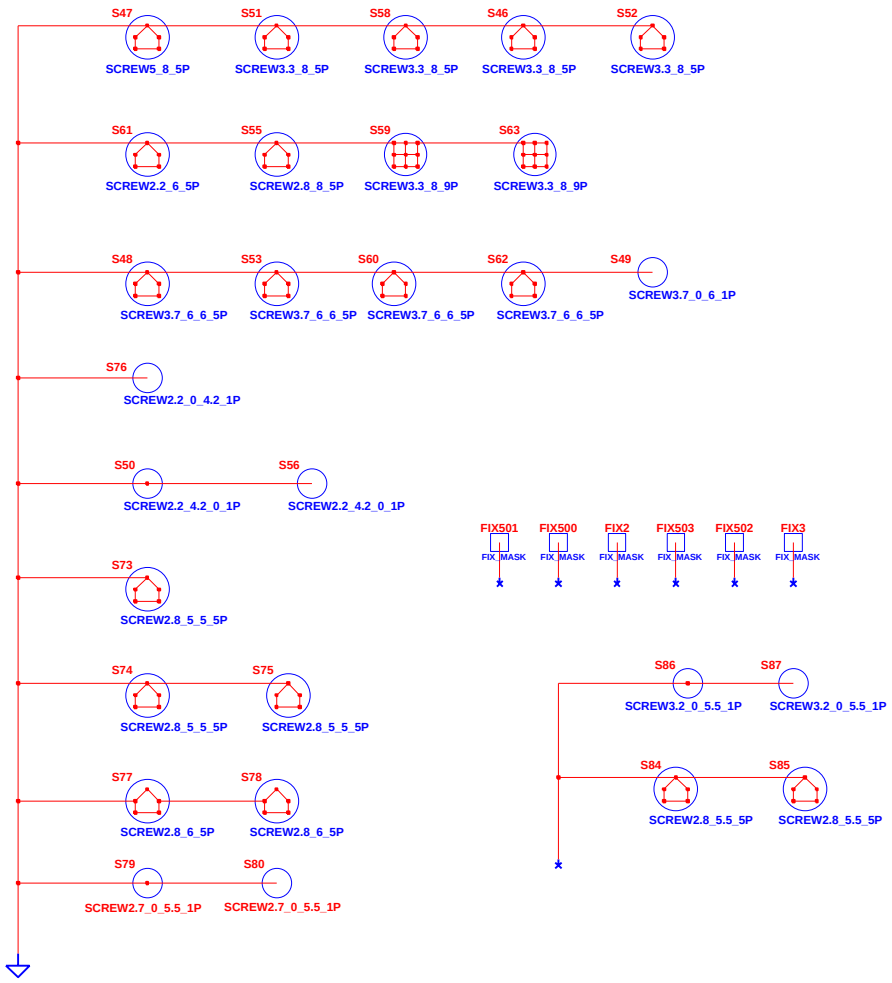

CHANGE by	Jr	27-Mar-2007	

INVENTEC

TITLE *Miami 10*
SCREW

SIZE	CODE	DOC. NUMBER	REV
A3	CS	1310A21108	A04

SHEET 59 OF 59