Perugia 10M

MP Build(A03)

2009.05.05

DATE	CHANGE NO.	REV

	EE	DATE	POWER	DATE
DRAWER				
DESIGN				
CHECK				
RESPONSIBLE				

SIZE = 3 VER :

FILE NAME : XXXX-XXXXXX-XX

P/N XXXXXXXXXXXX

INVENTEC

TITLE *Perugia10M*

SIZE	CODE	DOC. NUMBER	REV
A3	CS	*1310A2250501*	*x01*

SHEET 1 OF 63

TABLE OF CONTENTS

PAGE

1.COVER PAGE
2.INDEX
3.BLOCK DIAGRAM
4.POWER SEQUENCE BLOCK
5-12.SYSTEM POWER
13.CLOCK GENERATOR
14.PENRYN-1
15.PENRYN-2
16.PENRYN-3
17.PENRYN-4
18.FAN & THERMAL CONTROLLER
19.CANTIGA-1
20.CANTIGA-2
21.CANTIGA-3
22.CANTIGA-4
23.CANTIGA-5
24.CANTIGA-6
25.CANTIGA-7
26.DDR2 DIMM0
27.DDR2 DIMM1
28.DDR DAMPING
29.CRT CONN
30.LCM CONN

PAGE

31.ICH9-1
32.ICH9-2
33.ICH9-3
34.ICH9-4
35.ICH9-5
36.SATA HDD CONN
37.ODD CONN
38.USB CONN
39.ESATA CONN
40.Camera
41.BLUE TOOTH CONN
42.KBC
43.K/B & TP/B CONN
44.Audio Codec
45.Audio AMP/MIC/Speaker
46.LAN CONTROLLER
47.RJ45 & TRANSFORMER
48.HDMI & CEC
49.HDMI CONN
50.USB Card Reader
51.Card Bus-1
52.Card Bus-2
53.Express Card

PAGE

54.WLAN /Debug
55.MDC 1.5 CONN
56.LED(M/B) & HOTKEY/B CONN
57.KILL SWITCH& HALL SENSOR
58.Screw
59.EMI
60.3D sensor
61. Hotkey board
62. Touch pad board
63. power board

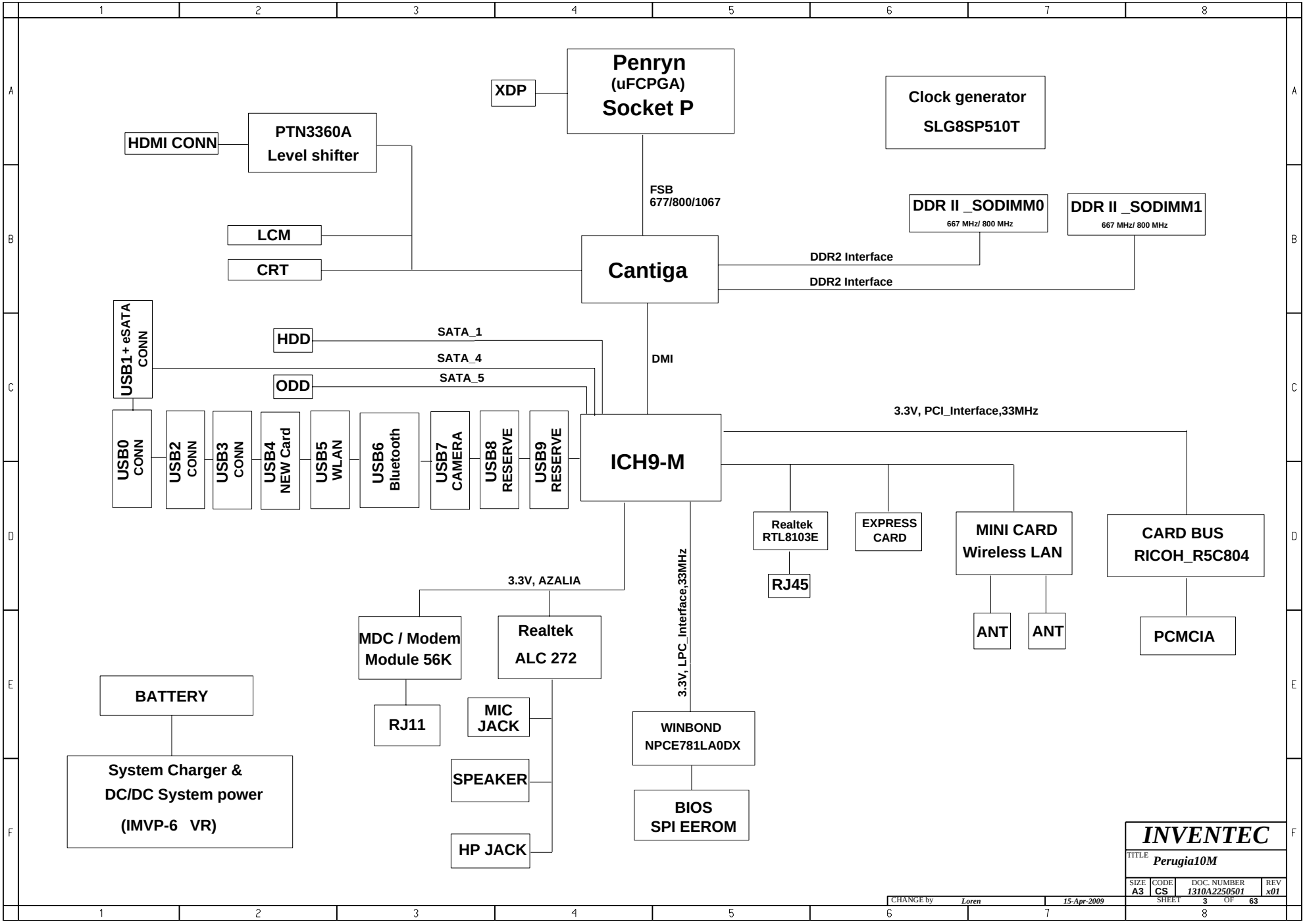
Penryn
(uFCPGA)
Socket P
XDP
Clock generator
SLG8SP510T
HDMI CONN
PTN3360A
Level shifter
FSB
677/800/1067
DDR II _SODIMM0
667 MHz/ 800 MHz
DDR II _SODIMM1
667 MHz/ 800 MHz
LCM
CRT
Cantiga
DDR2 Interface
DDR2 Interface
USB1+ eSATA CONN
HDD
SATA_1
SATA_4
ODD
SATA_5
DMI
3.3V, PCI_Interface,33MHz
USB0 CONN
USB2 CONN
USB3 CONN
USB4 NEW Card
USB5 WLAN
USB6 Bluetooth
USB7 CAMERA
USB8 RESERVE
USB9 RESERVE
ICH9-M
Realtek RTL8103E
RJ45
EXPRESS CARD
MINI CARD
Wireless LAN
ANT
ANT
CARD BUS
RICOH_R5C804
PCMCIA
3.3V, AZALIA
MDC / Modem
Module 56K
RJ11
Realtek
ALC 272
MIC JACK
SPEAKER
HP JACK
3.3V, LPC_Interface,33MHz
WINBOND
NPCE781LA0DX
BIOS
SPI EEROM
BATTERY
System Charger &
DC/DC System power
(IMVP-6 VR)
INVENTEC
TITLE Perugia10M
SIZE A3
CODE CS
DOC. NUMBER 1310A2250501
REV x01
SHEET 3 OF 63
CHANGE by Loren
15-Apr-2009

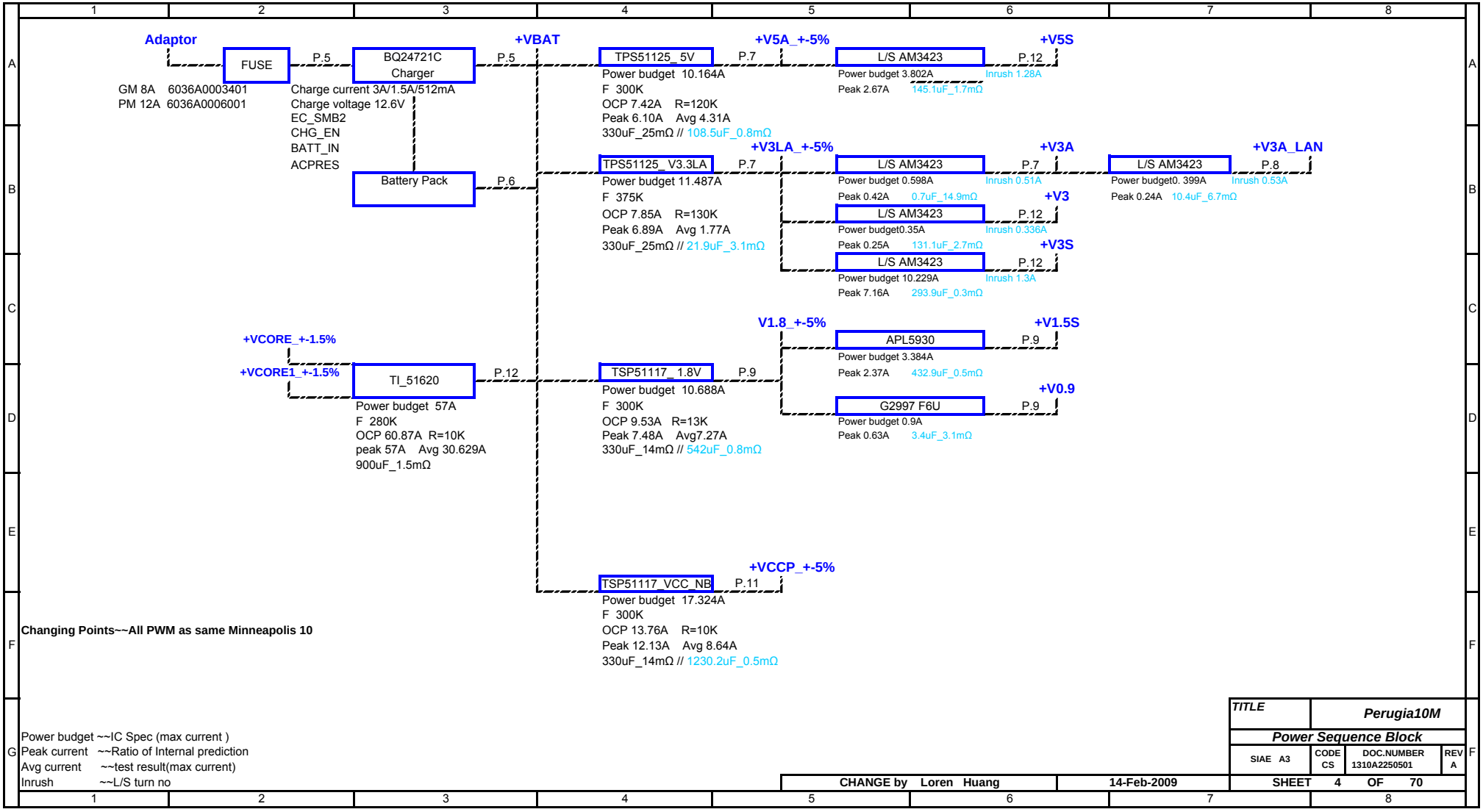

Changing Points~~All PWM as same Minneapolis 10

Power budget ~~IC Spec (max current)
Peak current ~~Ratio of Internal prediction
Avg current ~~test result(max current)
Inrush ~~L/S turn no

TITLE	*Perugia10M*		
Power Sequence Block			
SIAE A3	CODE CS	DOC.NUMBER 1310A2250501	REV A
CHANGE by Loren Huang	14-Feb-2009	SHEET 4 OF 70	

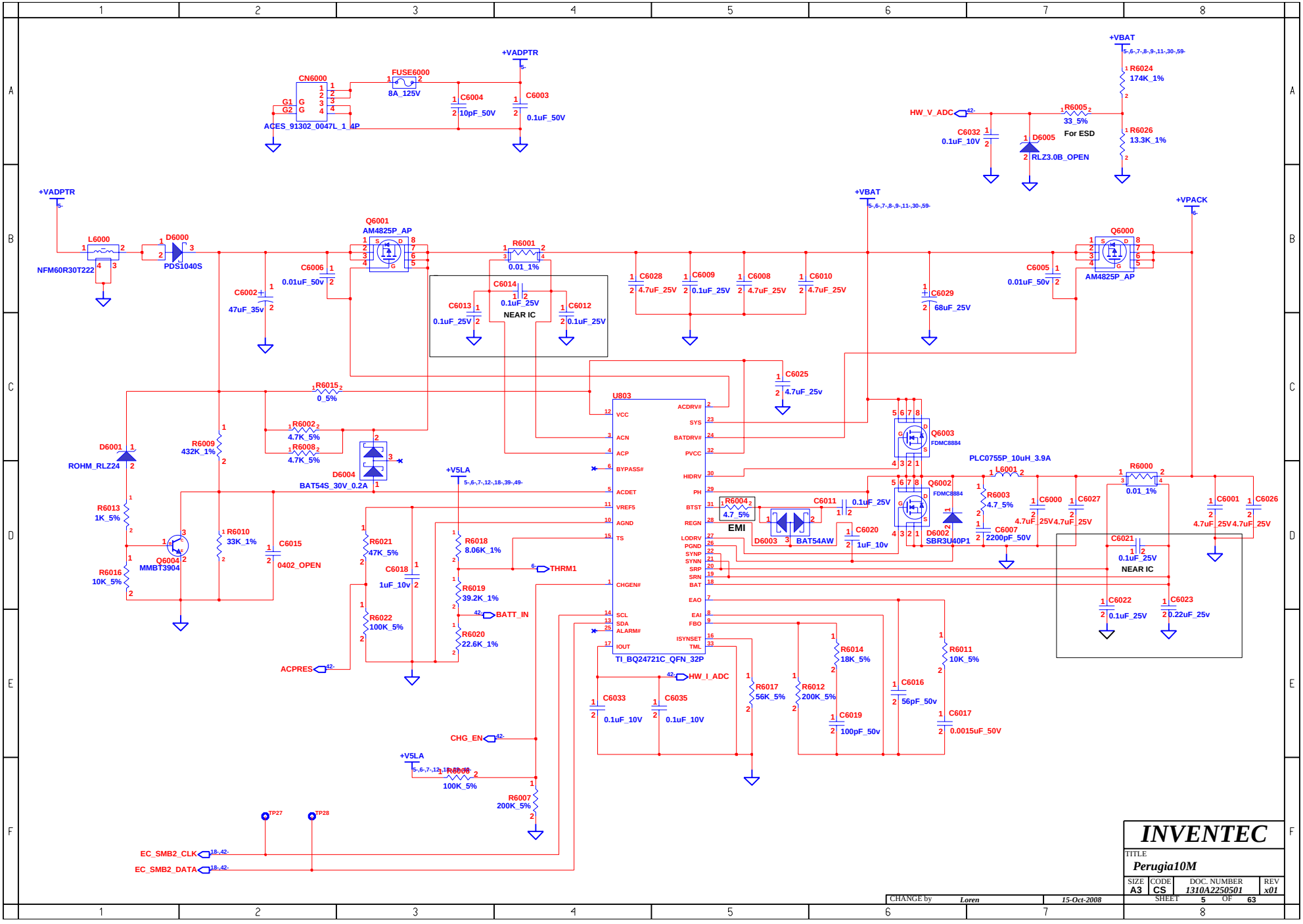
+VADPTR
CN6000
ACES_91302_0047L_1_4P
FUSE6000
8A_125V
C6004
10pF_50V
C6003
0.1uF_50V
+VBAT
R6024
174K_1%
HW_V_ADC
R6005
33_5%
For ESD
C6032
0.1uF_10V
D6005
RLZ3.0B_OPEN
R6026
13.3K_1%
L6000
NFM60R30T222
D6000
PDS1040S
Q6001
AM4825P_AP
R6001
0.01_1%
C6006
0.01uF_50v
C6002
47uF_35v
C6014
0.1uF_25V
NEAR IC
C6013
0.1uF_25V
C6012
0.1uF_25V
C6028
4.7uF_25V
C6009
0.1uF_25V
C6008
4.7uF_25V
C6010
4.7uF_25V
C6029
68uF_25V
C6005
0.01uF_50v
Q6000
AM4825P_AP
+VPACK
C6025
4.7uF_25v
R6015
0_5%
U803
VCC
ACN
ACP
BYPASS#
ACDET
VREF5
AGND
TS
CHGEN#
SCL
SDA
ALARM#
IOUT
ACDRV#
SYS
BATDRV#
PVCC
HIDRV
PH
BTST
REGN
LODRV
PGND
SYNP
SYNN
SRP
SRN
BAT
EAO
EAI
FBO
ISYNSET
TML
TI_BQ24721C_QFN_32P
R6002
4.7K_5%
R6008
4.7K_5%
D6001
ROHM_RLZ24
R6009
432K_1%
D6004
BAT54S_30V_0.2A
+V5LA
R6013
1K_5%
R6016
10K_5%
Q6004
MMBT3904
R6010
33K_1%
C6015
0402_OPEN
R6021
47K_5%
C6018
1uF_10v
R6022
100K_5%
R6018
8.06K_1%
THRM1
R6019
39.2K_1%
BATT_IN
R6020
22.6K_1%
ACPRES
R6004
4.7_5%
EMI
D6003
BAT54AW
C6011
0.1uF_25V
C6020
1uF_10v
Q6003
FDMC8884
Q6002
FDMC8884
D6002
SBR3U40P1
PLC0755P_10uH_3.9A
L6001
R6003
4.7_5%
C6000
4.7uF_25V
C6027
4.7uF_25V
C6007
2200pF_50V
R6000
0.01_1%
C6001
4.7uF_25V
C6026
4.7uF_25V
C6021
0.1uF_25V
NEAR IC
C6022
0.1uF_25V
C6023
0.22uF_25v
HW_I_ADC
C6033
0.1uF_10V
C6035
0.1uF_10V
R6017
56K_5%
R6012
200K_5%
R6014
18K_5%
C6019
100pF_50v
C6016
56pF_50v
R6011
10K_5%
C6017
0.0015uF_50V
CHG_EN
R6006
100K_5%
R6007
200K_5%
TP27
TP28
EC_SMB2_CLK
EC_SMB2_DATA
INVENTEC
TITLE
Perugia10M
SIZE A3
CODE CS
DOC. NUMBER 1310A2250501
REV x01
SHEET 5 OF 63
CHANGE by Loren
15-Oct-2008

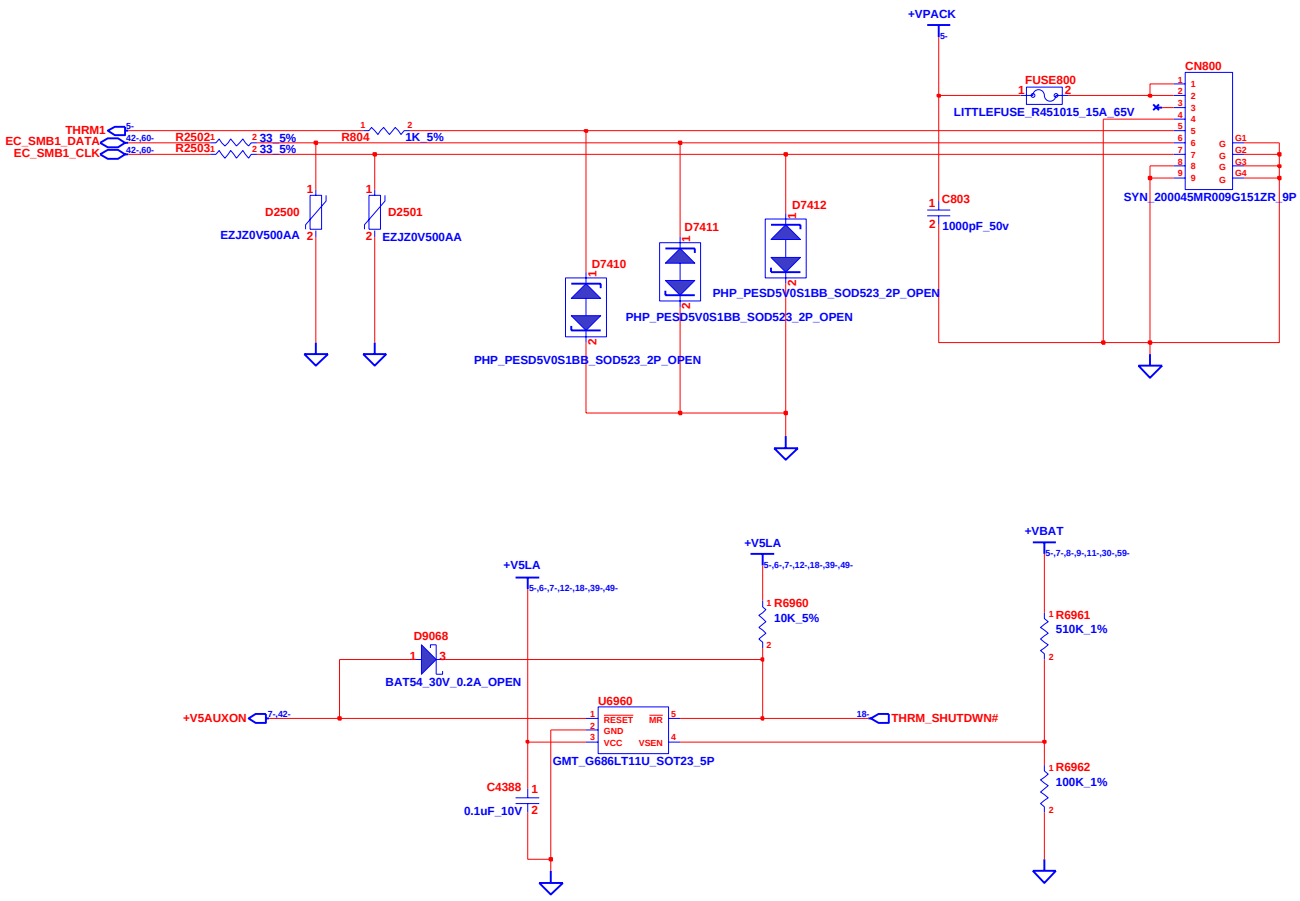

CHANGE by	Loren	10-Oct-2008	

INVENTEC

TITLE

SELECT & BATTERY CONN

SIZE	CODE	DOC. NUMBER	REV
A3	CS	1310A2250501	x01

SHEET 6 OF 63

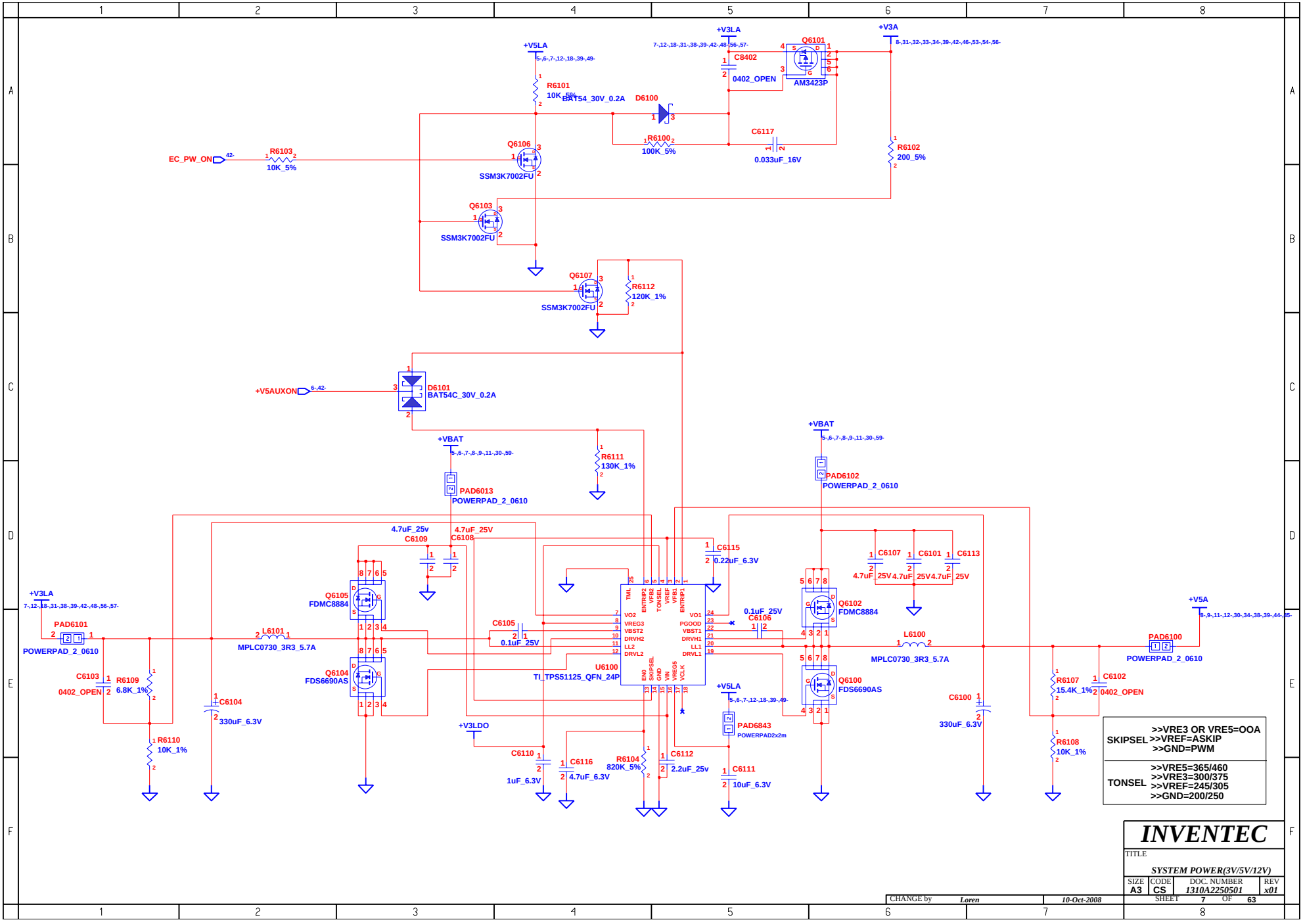
+V3LA
7-,12-,18-,31-,38-,39-,42-,48-,56-,57-
+V3A
8-,31-,32-,33-,34-,39-,42-,46-,53-,54-,56-
+V5LA
5-,6-,7-,12-,18-,39-,49-
Q6101
AM3423P
C8402
0402_OPEN
R6101
10K_5%
D6100
BAT54_30V_0.2A
R6100
100K_5%
C6117
0.033uF_16V
R6102
200_5%
EC_PW_ON
42-
R6103
10K_5%
Q6106
SSM3K7002FU
Q6103
SSM3K7002FU
Q6107
SSM3K7002FU
R6112
120K_1%
+V5AUXON
6-,42-
D6101
BAT54C_30V_0.2A
+VBAT
5-,6-,7-,8-,9-,11-,30-,59-
R6111
130K_1%
PAD6013
POWERPAD_2_0610
PAD6102
POWERPAD_2_0610
4.7uF_25v
C6109
4.7uF_25V
C6108
C6115
0.22uF_6.3V
C6107
4.7uF 25V
C6101
4.7uF 25V
C6113
4.7uF 25V
+V3LA
7-,12-,18-,31-,38-,39-,42-,48-,56-,57-
PAD6101
POWERPAD_2_0610
Q6105
FDMC8884
L6101
MPLC0730_3R3_5.7A
C6105
0.1uF_25V
0.1uF_25V
C6106
Q6102
FDMC8884
L6100
MPLC0730_3R3_5.7A
+V5A
8-,9-,11-,12-,30-,34-,38-,39-,44-,55-
PAD6100
POWERPAD_2_0610
C6103
0402_OPEN
R6109
6.8K_1%
Q6104
FDS6690AS
C6104
330uF_6.3V
U6100
TI_TPS51125_QFN_24P
TMI
ENTRIP2
VFB2
TONSEL
VREF
VFB1
ENTRIP1
VO2
VREG3
VBST2
DRVH2
LL2
DRVL2
VO1
PGOOD
VBST1
DRVH1
LL1
DRVL1
EN0
SKIPSEL
GND
VFB5
VREG5
VCLK
Q6100
FDS6690AS
C6100
330uF_6.3V
R6107
15.4K_1%
C6102
0402_OPEN
R6110
10K_1%
+V3LDO
C6110
1uF_6.3V
C6116
4.7uF_6.3V
R6104
820K_5%
C6112
2.2uF_25v
+V5LA
5-,6-,7-,12-,18-,39-,49-
PAD6843
POWERPAD2x2m
C6111
10uF_6.3V
R6108
10K_1%
SKIPSEL
>>VRE3 OR VRE5=OOA
>>VREF=ASKIP
>>GND=PWM
TONSEL
>>VRE5=365/460
>>VRE3=300/375
>>VREF=245/305
>>GND=200/250
INVENTEC
TITLE
SYSTEM POWER(3V/5V/12V)
SIZE A3
CODE CS
DOC. NUMBER 1310A2250501
REV x01
SHEET 7 OF 63
CHANGE by Loren
10-Oct-2008

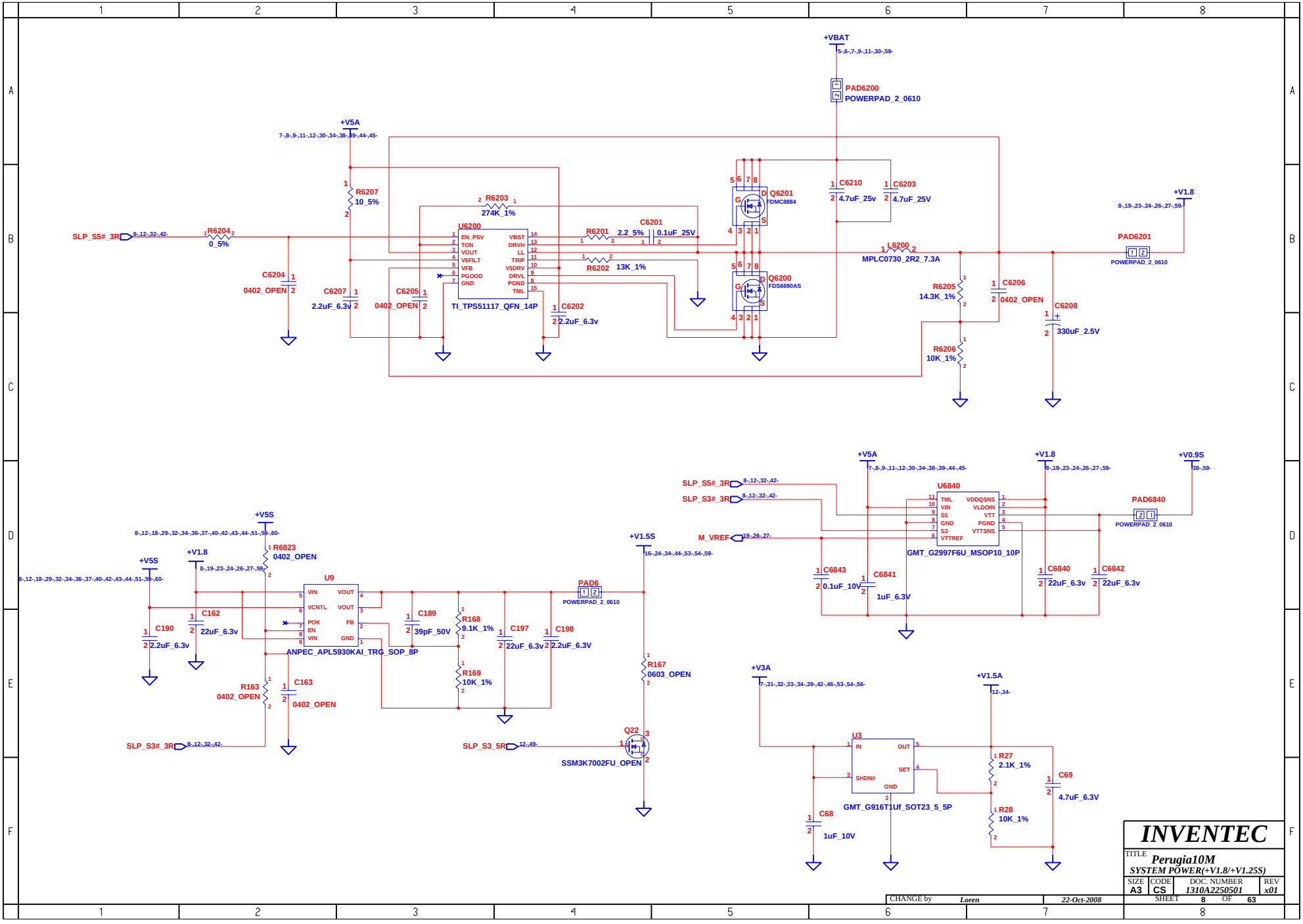

INVENTEC

TITLE
Perugia10M
SYSTEM POWER(+V1.8/+V1.25S)

SIZE	CODE	DOC. NUMBER	REV
A3	CS	1310A2250501	x01

CHANGE by *Loren* | *22-Oct-2008* | SHEET 8 OF 63

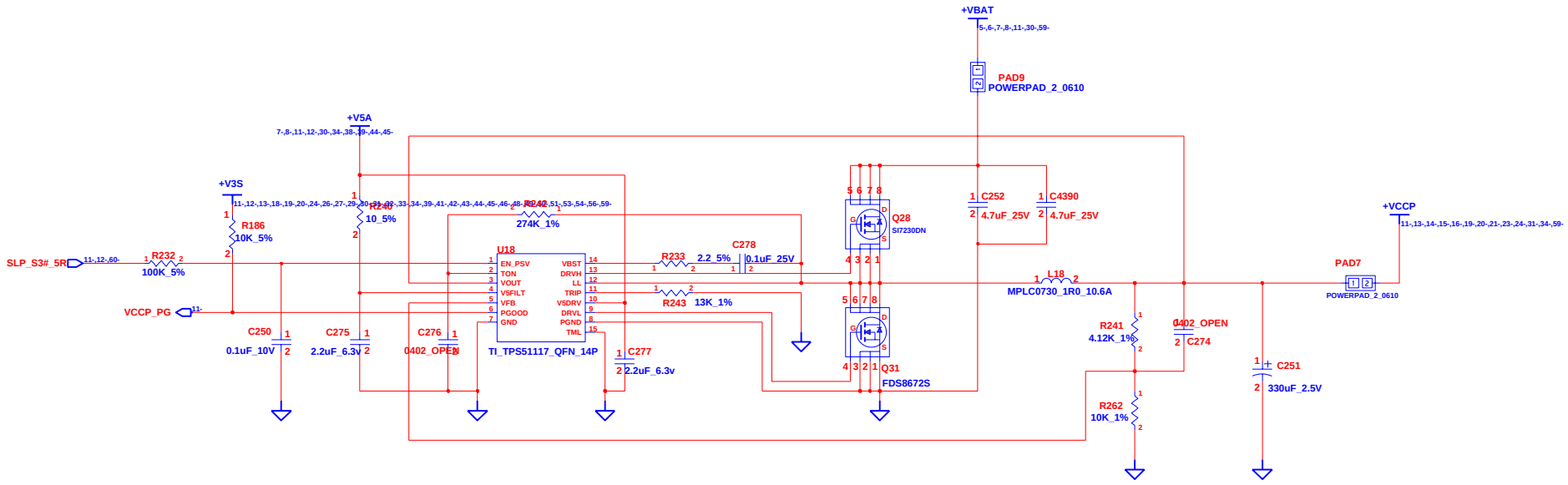

CHANGE by	Loren	10-Oct-2008	

INVENTEC

TITLE
Perugia10M
GRAPHIC POWER (+VGFX_CORE)

SIZE	CODE	DOC. NUMBER	REV
A3	CS	1310A2250501	x01

SHEET 9 OF 63

BLANK

CHANGE by	Loren	10-Oct-2008		

INVENTEC

TITLE **Perugia10M**
SYSTEM POWER(+VCCP/+V1.5S)

SIZE	CODE	DOC. NUMBER	REV
A3	CS	1310A2250501	x01

SHEET 10 OF 63

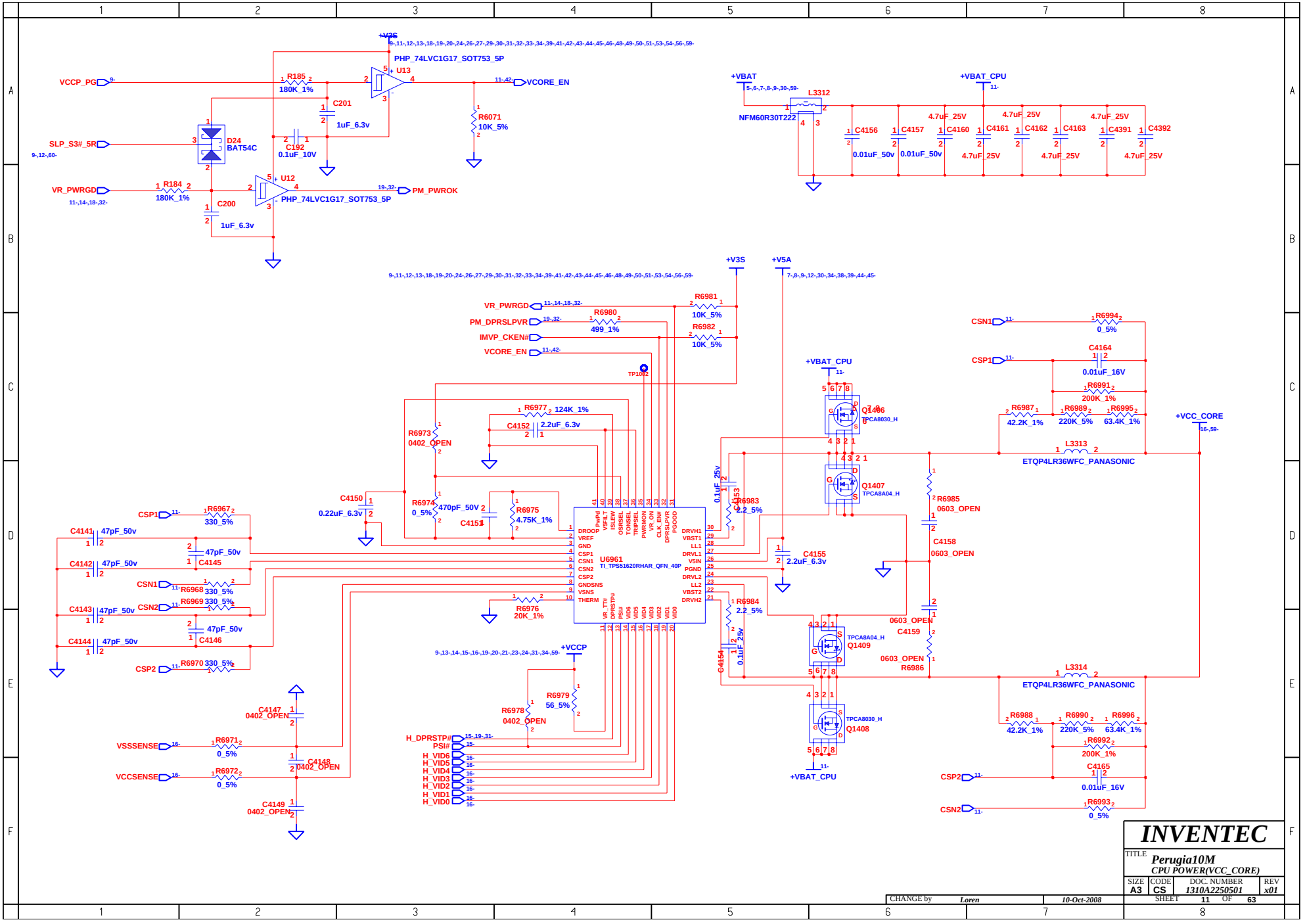
+V3S
PHP_74LVC1G17_SOT753_5P
U13
VCCP_PG
R185
180K_1%
C201
1uF_6.3v
C192
0.1uF_10V
R6071
10K_5%
VCORE_EN
SLP_S3#_5R
D24
BAT54C
VR_PWRGD
R184
180K_1%
C200
1uF_6.3v
U12
PHP_74LVC1G17_SOT753_5P
PM_PWROK
+VBAT
L3312
NFM60R30T222
+VBAT_CPU
C4156
C4157
C4160
C4161
C4162
C4163
C4391
C4392
0.01uF_50v
4.7uF_25V
+V5A
R6981
10K_5%
R6980
499_1%
R6982
10K_5%
PM_DPRSLPVR
IMVP_CKEN#
TP1012
R6977
124K_1%
C4152
2.2uF_6.3v
R6973
0402_OPEN
R6974
0_5%
470pF_50V
C4151
R6975
4.75K_1%
C4150
0.22uF_6.3v
U6961
TI_TPS51620RHAR_QFN_40P
DROOP
VREF
GND
CSP1
CSN1
CSN2
CSP2
GNDSNS
VSNS
THERM
PwrPd
VSFILT
ISLEW
CONSEL
TONSEL
TRIPSEL
PWRMON
VR_ON
CLK_EN#
DPRSLPVR
VDDQ
DRVH1
VBST1
LL1
DRVL1
VSN
PGND
DRVL2
LL2
VBST2
DRVH2
VR_TT#
DPRSTP#
PSI#
VID6
VID5
VID4
VID3
VID2
VID1
VID0
R6976
20K_1%
R6984
2.2_5%
C4154
0.1uF_25v
C4153
0.1uF_25v
R6983
2.2_5%
C4155
2.2uF_6.3v
Q1406
TPCA8030_H
Q1407
TPCA8A04_H
Q1409
TPCA8A04_H
Q1408
TPCA8030_H
R6985
0603_OPEN
C4158
0603_OPEN
C4159
0603_OPEN
R6986
0603_OPEN
+VCC_CORE
L3313
ETQP4LR36WFC_PANASONIC
L3314
ETQP4LR36WFC_PANASONIC
CSN1
CSP1
R6994
0_5%
C4164
0.01uF_16V
R6991
200K_1%
R6987
42.2K_1%
R6989
220K_5%
R6995
63.4K_1%
R6988
42.2K_1%
R6990
220K_5%
R6996
63.4K_1%
R6992
200K_1%
C4165
0.01uF_16V
R6993
0_5%
CSP2
CSN2
C4141
C4142
C4143
C4144
47pF_50v
C4145
C4146
R6967
330_5%
R6968
330_5%
R6969
330_5%
R6970
330_5%
+VCCP
R6979
56_5%
R6978
0402_OPEN
C4147
0402_OPEN
C4148
0402_OPEN
C4149
0402_OPEN
VSSSENSE
VCCSENSE
R6971
0_5%
R6972
0_5%
H_DPRSTP#
PSI#
H_VID6
H_VID5
H_VID4
H_VID3
H_VID2
H_VID1
H_VID0
INVENTEC
TITLE
Perugia10M
CPU POWER(VCC_CORE)
SIZE A3
CODE CS
DOC. NUMBER 1310A2250501
REV x01
SHEET 11 OF 63
CHANGE by Loren
10-Oct-2008

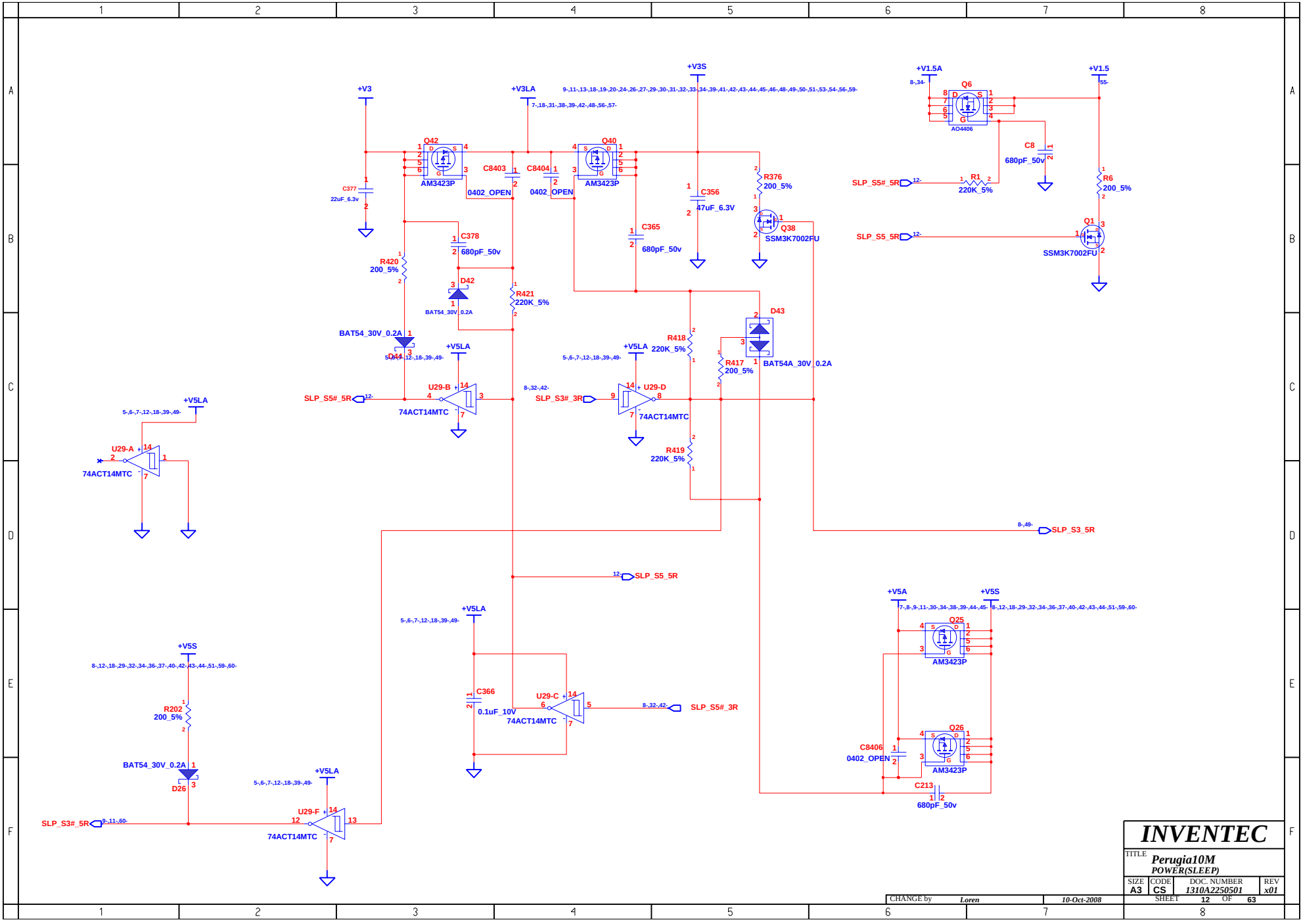

INVENTEC

TITLE **Perugia10M**
POWER(SLEEP)

SIZE	CODE	DOC. NUMBER	REV
A3	CS	1310A2250501	x01

SHEET 12 OF 63

CHANGE by Loren 10-Oct-2008

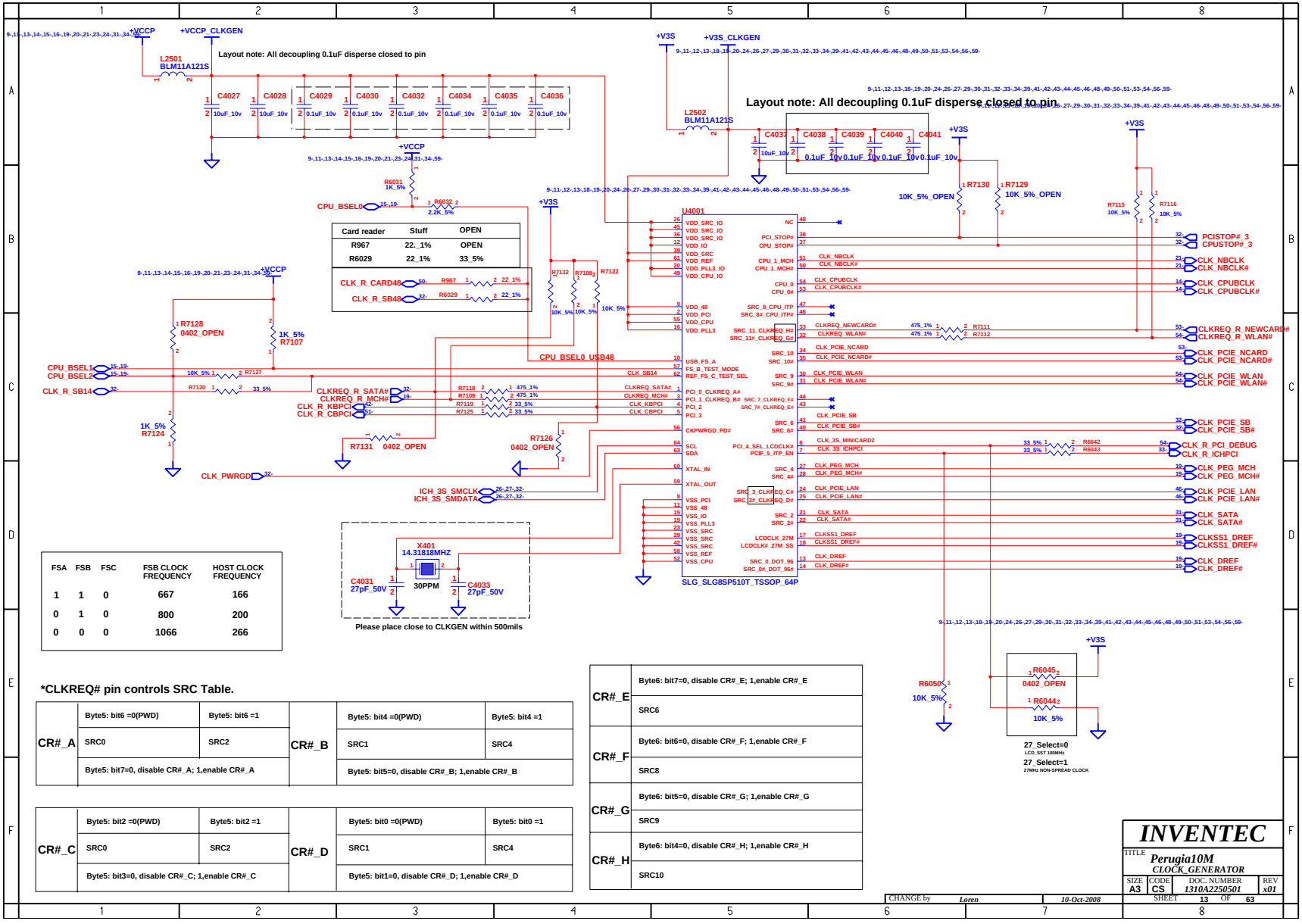

FSA	FSB	FSC	FSB CLOCK FREQUENCY	HOST CLOCK FREQUENCY
1	1	0	667	166
0	1	0	800	200
0	0	0	1066	266

***CLKREQ# pin controls SRC Table.**

CR#_A	Byte5: bit6 =0(PWD)	Byte5: bit6 =1	CR#_B	Byte5: bit4 =0(PWD)	Byte5: bit4 =1
	SRC0	SRC2		SRC1	SRC4
	Byte5: bit7=0, disable CR#_A; 1,enable CR#_A			Byte5: bit5=0, disable CR#_B; 1,enable CR#_B	

CR#_C	Byte5: bit2 =0(PWD)	Byte5: bit2 =1	CR#_D	Byte5: bit0 =0(PWD)	Byte5: bit0 =1
	SRC0	SRC2		SRC1	SRC4
	Byte5: bit3=0, disable CR#_C; 1,enable CR#_C			Byte5: bit1=0, disable CR#_D; 1,enable CR#_D	

CR#_E	Byte6: bit7=0, disable CR#_E; 1,enable CR#_E
	SRC6
CR#_F	Byte6: bit6=0, disable CR#_F; 1,enable CR#_F
	SRC8
CR#_G	Byte6: bit5=0, disable CR#_G; 1,enable CR#_G
	SRC9
CR#_H	Byte6: bit4=0, disable CR#_H; 1,enable CR#_H
	SRC10

INVENTEC

TITLE: Perugia10M CLOCK_GENERATOR

SIZE	CODE	DOC. NUMBER	REV
A3	CS	1310A2250501	x01

SHEET 13 OF 63

CHANGE by Loren 10-Oct-2008

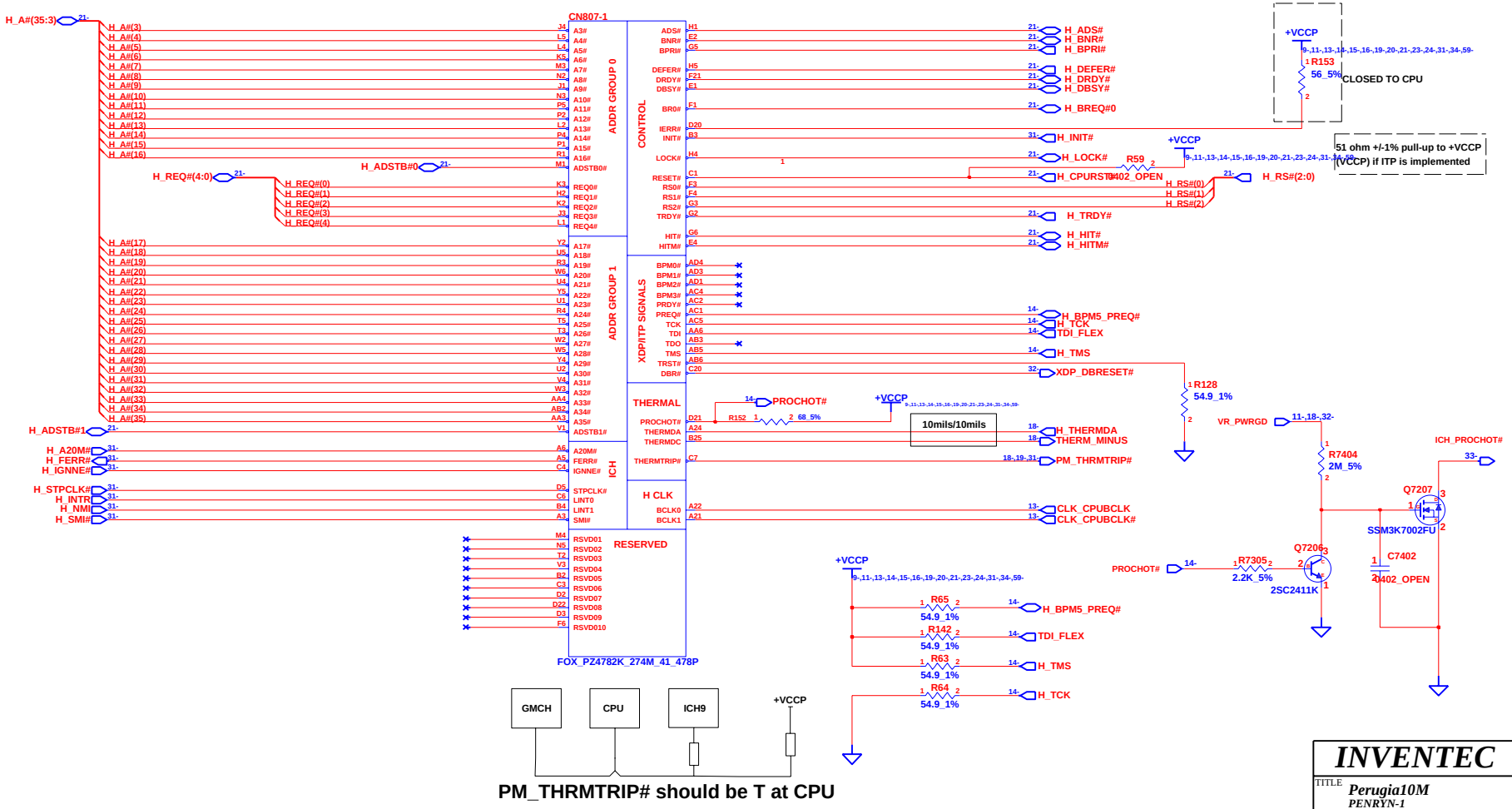

INVENTEC

TITLE Perugia10M
PENRYN-1

SIZE	CODE	DOC. NUMBER	REV
A3	CS	1310A2250501	x01

SHEET 14 OF 63

CHANGE by Loren 10-Oct-2008

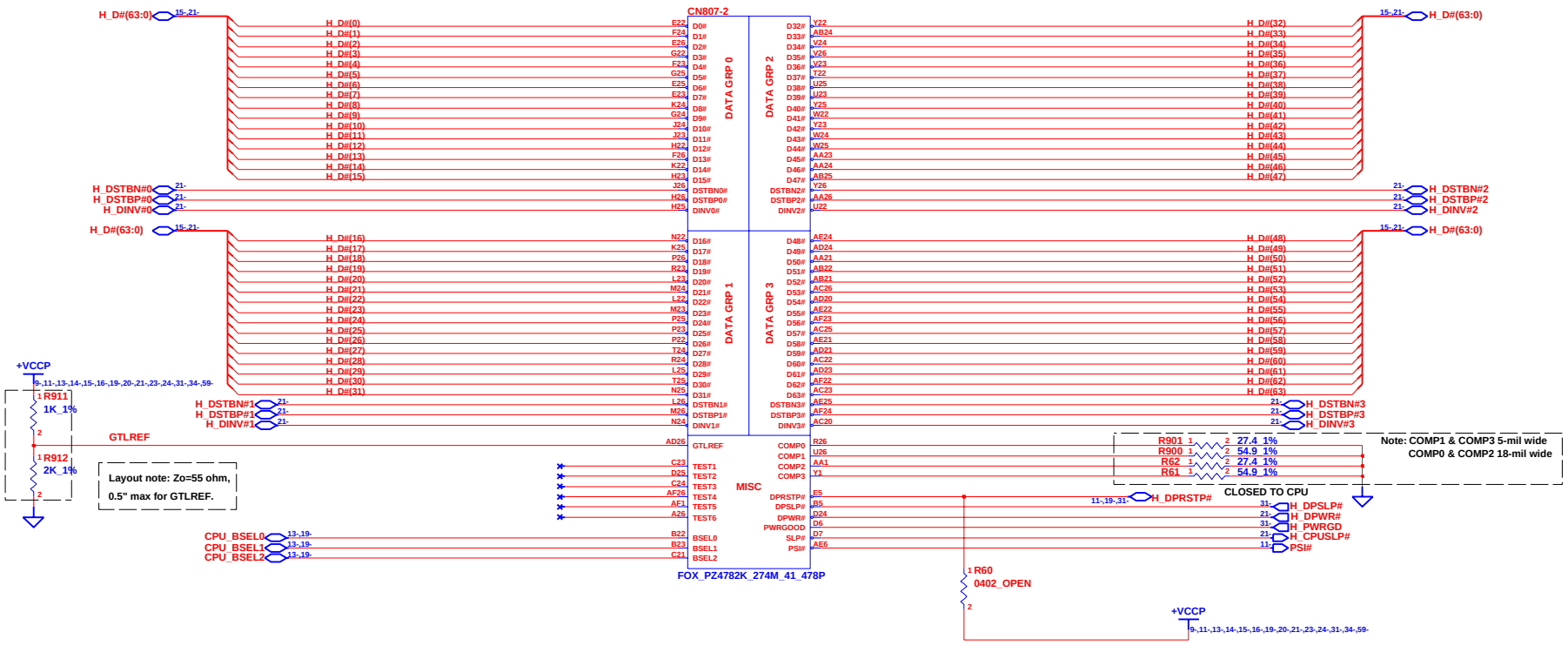

INVENTEC

TITLE Perugia10M
PENRYN-2

SIZE	CODE	DOC. NUMBER	REV
A3	CS	1310A2250501	x01

SHEET 15 OF 63

CHANGE by Loren 10-Oct-2008

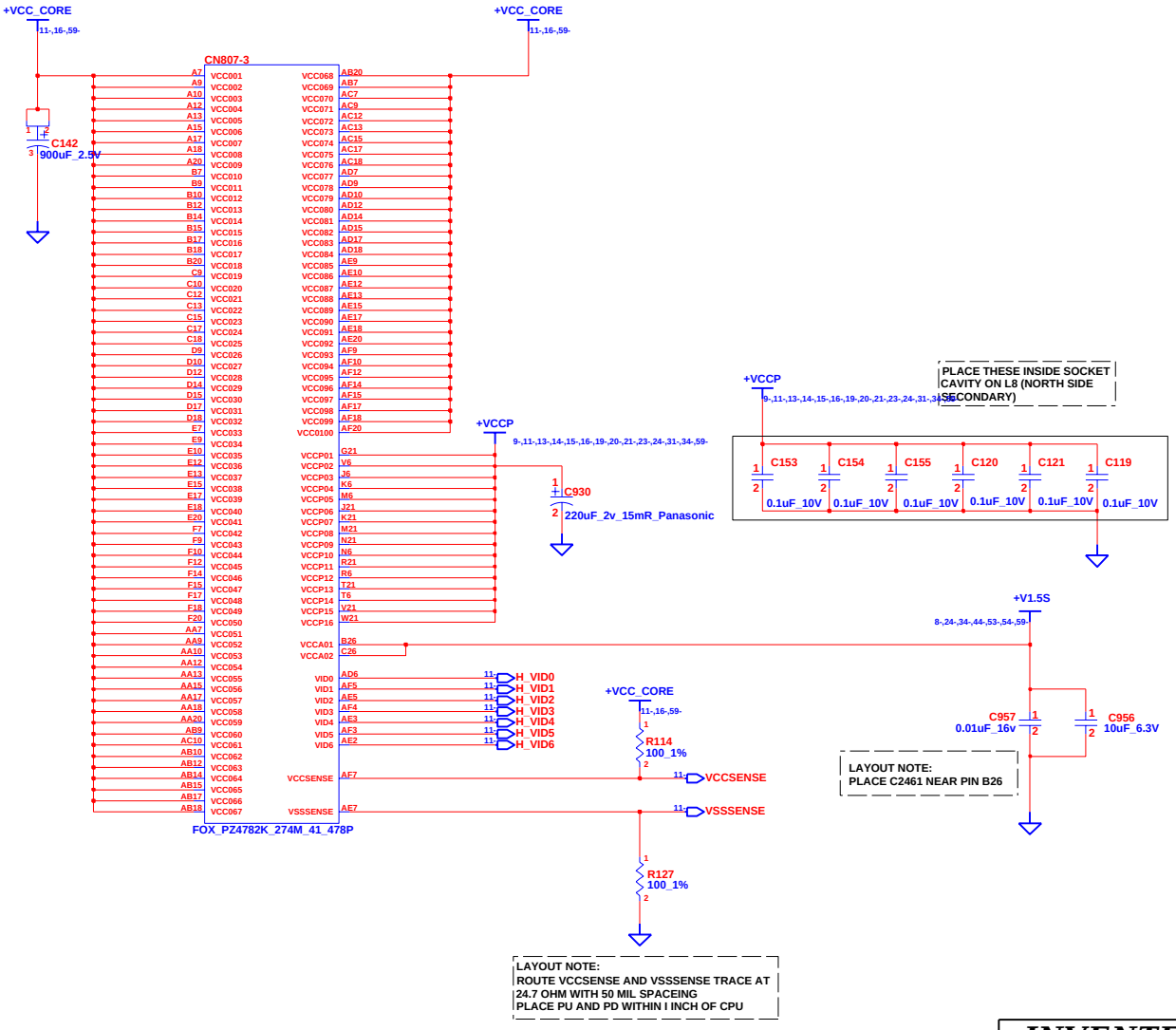

INVENTEC			
TITLE	Perugia10M PENRYN-3		
SIZE A3	CODE CS	DOC. NUMBER 1310A2250501	REV x01
CHANGE by Loren	10-Oct-2008	SHEET 16 OF 63	

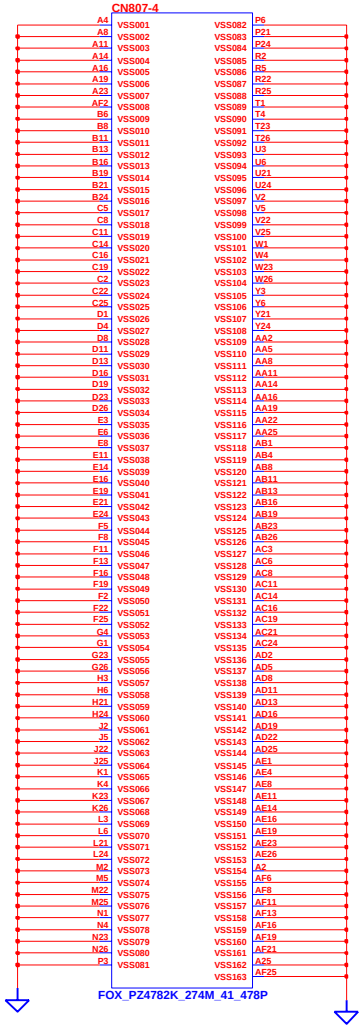

CHANGE by	Loren	10-Oct-2008	

INVENTEC

TITLE **Perugia10M**
PENRYN-4

SIZE	CODE	DOC. NUMBER	REV
A3	CS	1310A2250501	x01

SHEET 17 OF 63

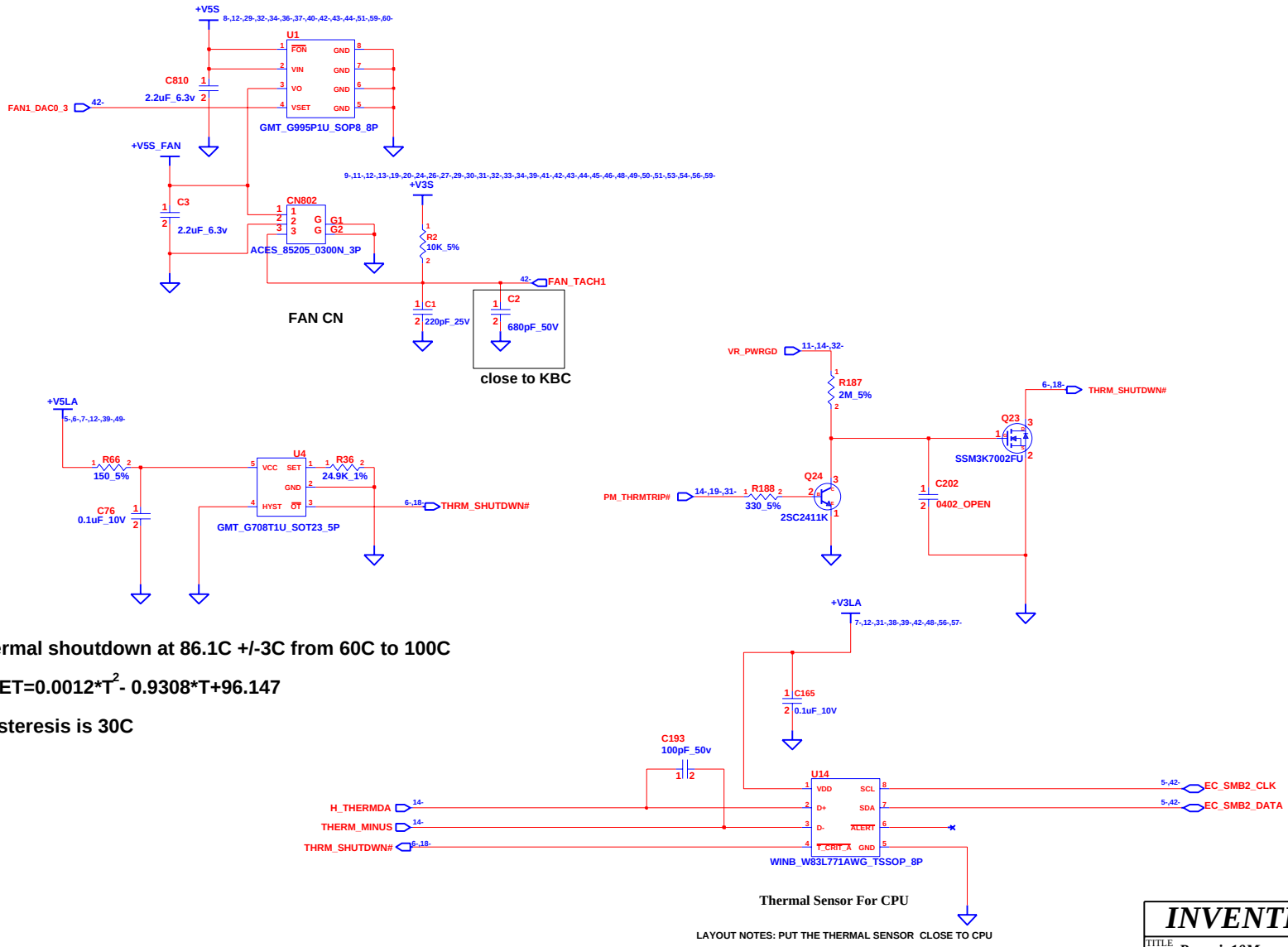

Thermal shoutdown at 86.1C +/-3C from 60C to 100C

RSET=0.0012*T^2- 0.9308*T+96.147

Hysteresis is 30C

Thermal Sensor For CPU

LAYOUT NOTES: PUT THE THERMAL SENSOR CLOSE TO CPU

CHANGE by	Loren	10-Oct-2008	

INVENTEC

TITLE *Perugia10M*
THERMAL&FAN CONTROLLER

SIZE	CODE	DOC. NUMBER	REV
A3	CS	1310A2250501	x01

SHEET 18 OF 63

MCH_CFG(5)	LOW=DMIx2 HIGH=DMIx4

MCH_CFG(7) (CPU Strap)	LOW=RSVD HIGH=Mobile CPU

MCH_CFG(9) PCIE Graphics Lane	LOW=Reverse Lane HIGH=Normal operation

NOTE : USE 4K-OHM RESISTOR WHEN INSTALLING PULL-UP/PULL-DOWN RESISTOR ON ANY MCH-CFG CONNECTION/PINS.

MCH_CFG(13:12) XOR/ALLZ	00=PARTIAL CLOCK GATING DISABLE 01=XOR MODE ENABLE 10=ALL-Z MODE ENABLE 11=NORMAL OPERATION

MCH_CFG(16) (FSB Dynamic ODT)	LOW=Dynamic ODT Disable HIGH=Dynamic ODT Enable

MCH_CFG(6)	LOW=TPM Enable HIGH=TPM Disable

NOTE: CFG[2:0] STRP : 010b : 800 MT/S
011b : 667 MT/S

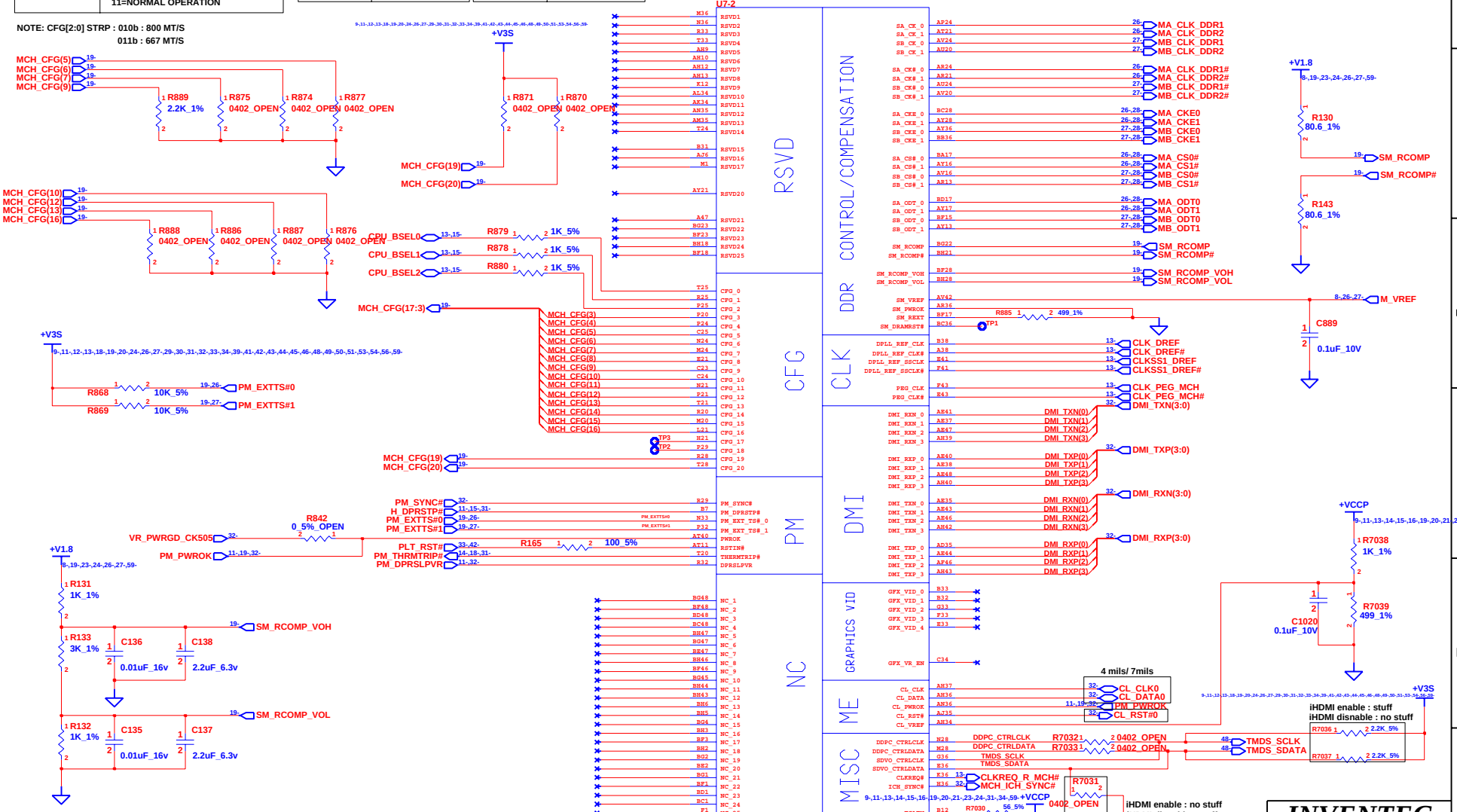

MCH_CFG(20) DIGITAL DISPLAY PORT(SDVO/DP/iHDMI) CONCURRENT WITH PCIE	LOW=ONLY DIGITAL DISPLAY PORT (SDVO/DP/iHDMI)OR PCIEIS OPERATIONAL HIGH= DIGITAL DISPLAY PORT (SDVO/DP/iHDMI)AND PCIE ARE OPERATING VIA THE PEG PORT

MCH_CFG(19) (DMI LANE REVERSAL)	LOW=NORMAL HIGH=LANES REVERSED

INVENTEC

TITLE: *Perugia10M*
CANTIGA-1

SIZE	CODE	DOC. NUMBER	REV
A3	CS	1310A2250501	x01

SHEET 19 OF 63

CHANGE by *Loren* | *10-Oct-2008*

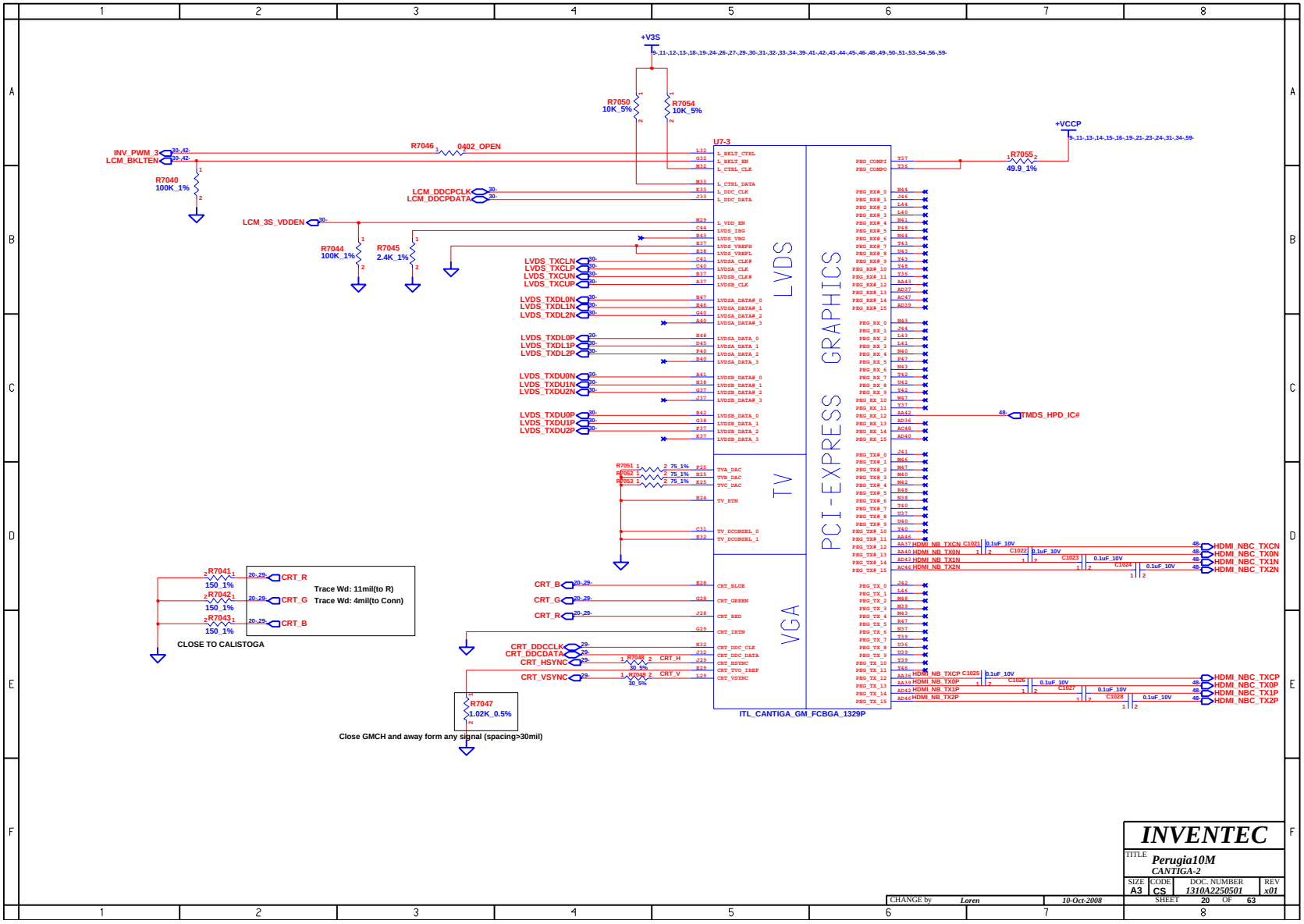

INVENTEC			
TITLE: Perugia10M CANTIGA-2			
SIZE: A3	CODE: CS	DOC. NUMBER: 1310A2250501	REV: x01
CHANGE by: Loren	10-Oct-2008	SHEET 20 OF 63	

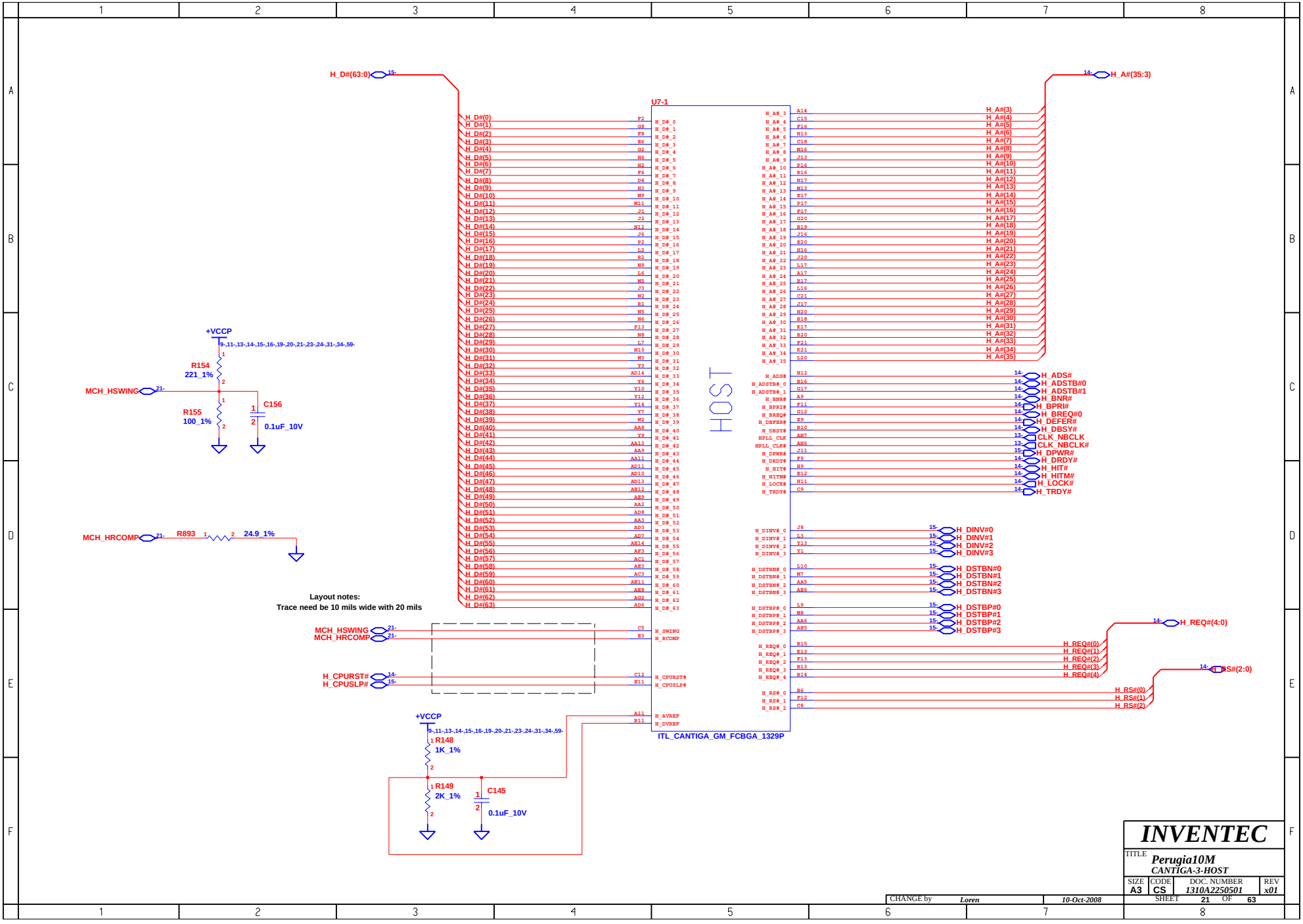
U7-1
HOST
ITL_CANTIGA_GM_FCBGA_1329P
H_D#(63:0)
H_A#(35:3)
H_ADS#
H_ADSTB#0
H_ADSTB#1
H_BNR#
H_BPR#
H_BREQ#0
H_DEFER#
H_DBSY#
CLK_NBCLK
CLK_NBCLK#
H_DPWR#
H_DRDY#
H_HIT#
H_HITM#
H_LOCK#
H_TRDY#
H_DINV#0
H_DINV#1
H_DINV#2
H_DINV#3
H_DSTBN#0
H_DSTBN#1
H_DSTBN#2
H_DSTBN#3
H_DSTBP#0
H_DSTBP#1
H_DSTBP#2
H_DSTBP#3
H_REQ#(4:0)
H_RS#(2:0)
H_REQ#(0)
H_REQ#(1)
H_REQ#(2)
H_REQ#(3)
H_REQ#(4)
H_RS#(0)
H_RS#(1)
H_RS#(2)
MCH_HSWING
MCH_HRCOMP
H_CPURST#
H_CPUSLP#
+VCCP
R154
221_1%
R155
100_1%
C156
0.1uF_10V
MCH_HRCOMP
R893
24.9_1%
Layout notes:
Trace need be 10 mils wide with 20 mils
R148
1K_1%
R149
2K_1%
C145
0.1uF_10V
INVENTEC
TITLE
Perugia10M
CANTIGA-3-HOST
SIZE A3
CODE CS
DOC. NUMBER 1310A2250501
REV x01
SHEET 21 OF 63
CHANGE by Loren
10-Oct-2008

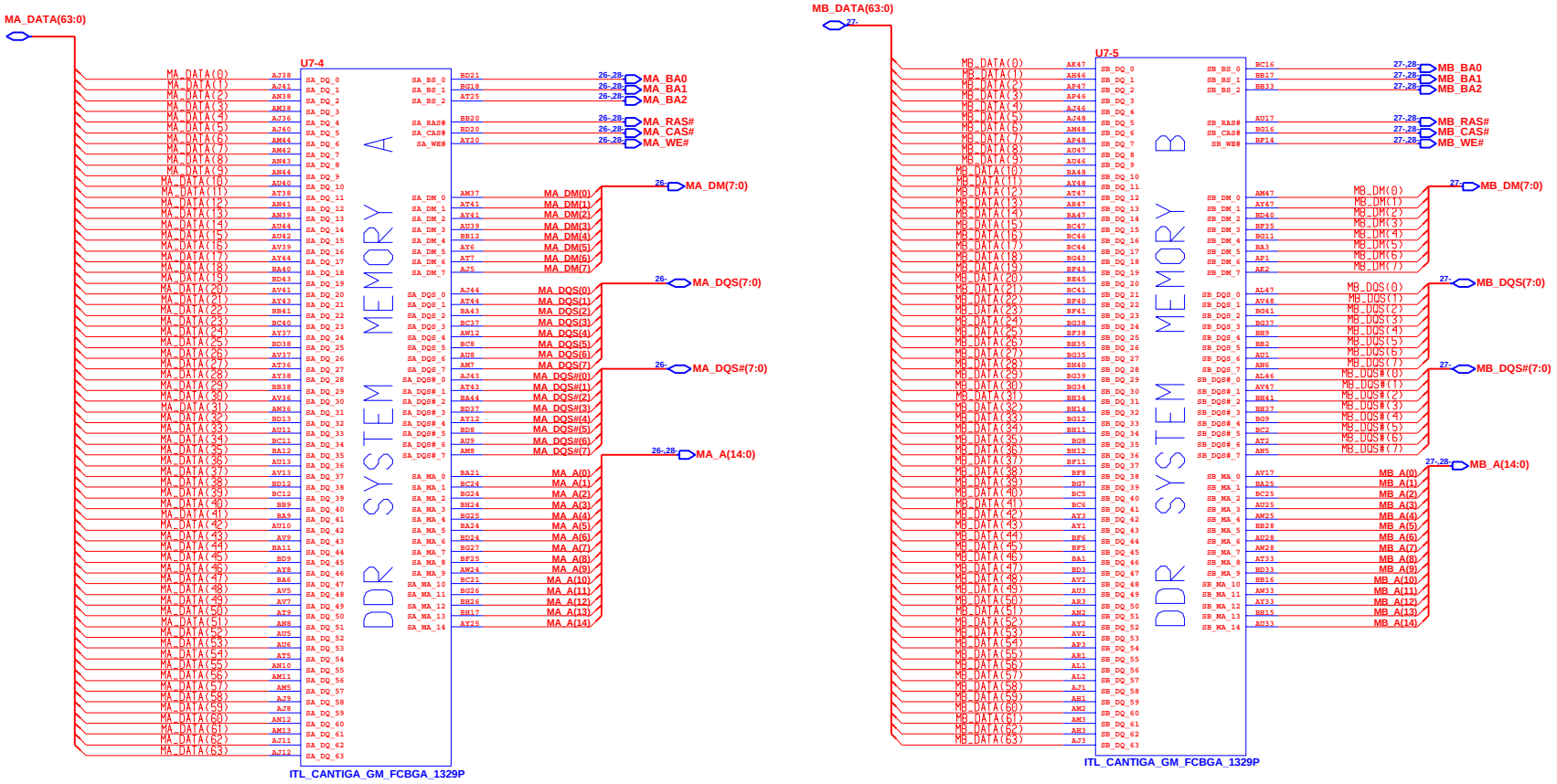

INVENTEC

TITLE
Perugia10M
CANTIGA-4-DDR2

SIZE	CODE	DOC. NUMBER	REV
A3	CS	1310A2250501	x01

SHEET 22 OF 63

CHANGE by Loren 11-Oct-2008

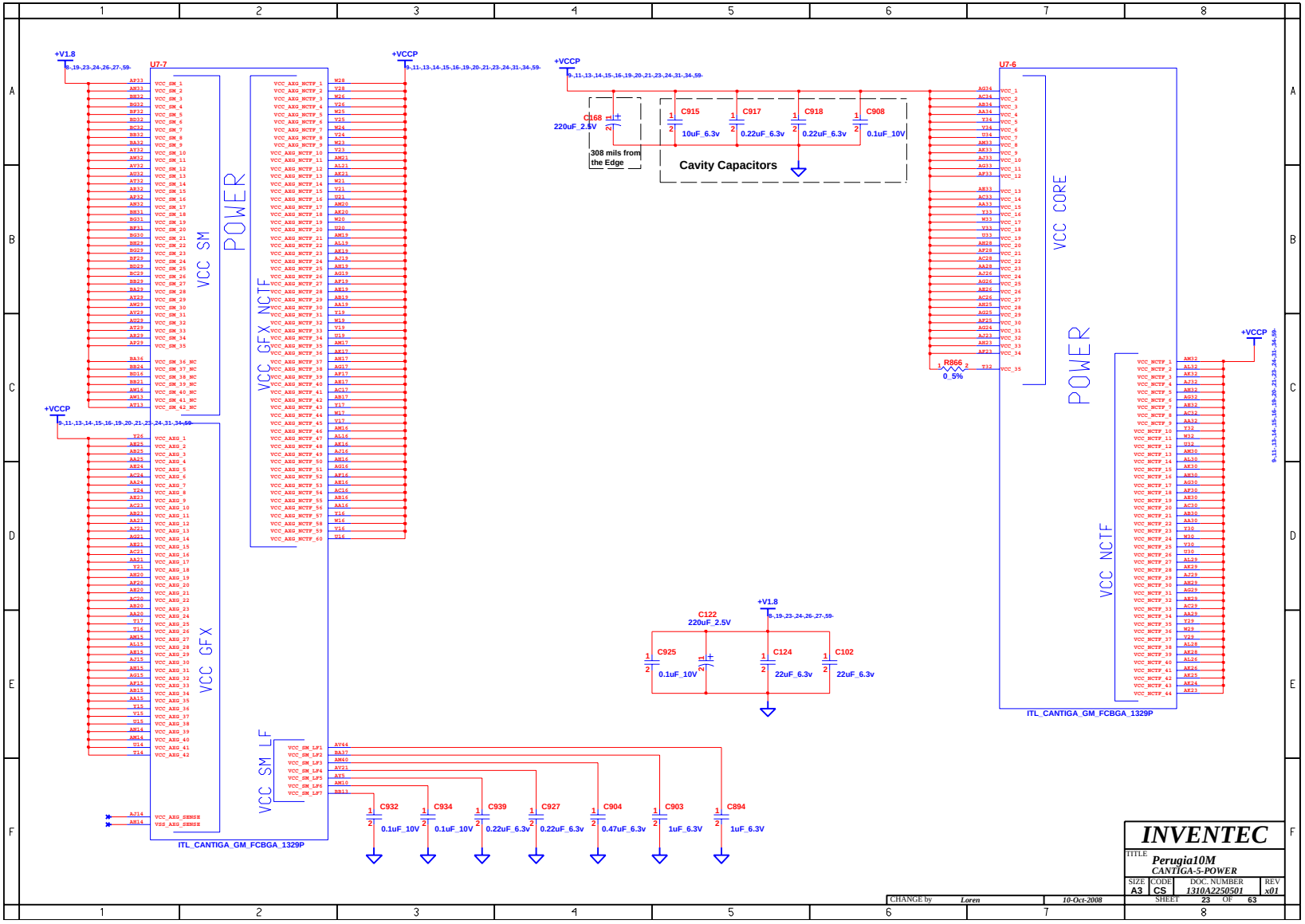

INVENTEC

TITLE
Perugia10M
CANTIGA-5-POWER

SIZE	CODE	DOC. NUMBER	REV
A3	CS	1310A2250501	x01

CHANGE by *Loren* *10-Oct-2008*

SHEET 23 OF 63

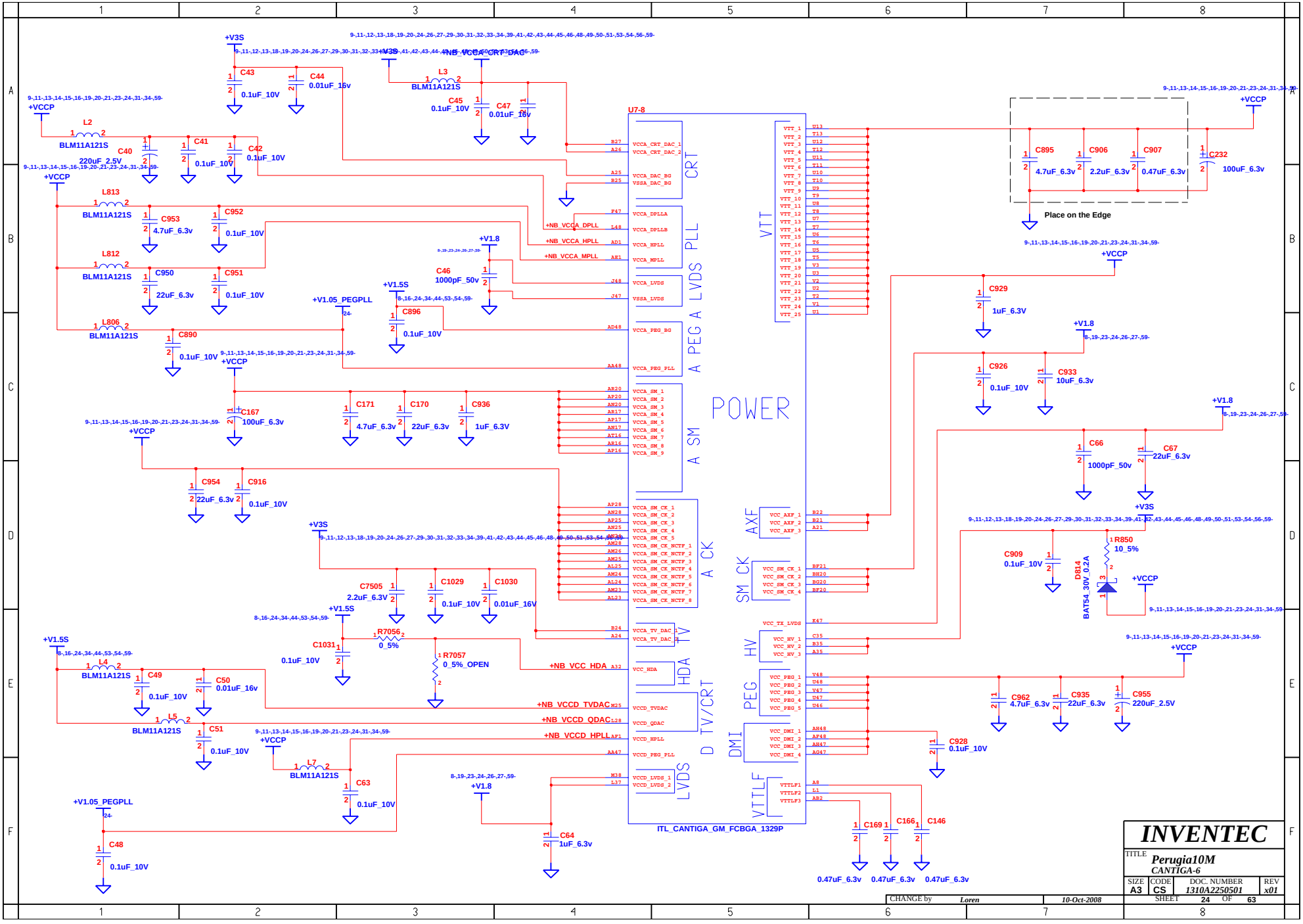
POWER
U7-8
ITL_CANTIGA_GM_FCBGA_1329P
CRT
A PEG A LVDS PLL
A SM
A CK
D TV/CRT
LVDS
HDA
TV
VTT
AXF
SM_CK
HV
PEG
DMI
VTTLF
+V3S
+VCCP
+V1.8
+V1.5S
+V1.05_PEGPLL
+NB_VCCA_CRT_DAC
+NB_VCCA_DPLL
+NB_VCCA_HPLL
+NB_VCCA_MPLL
+NB_VCC_HDA
+NB_VCCD_TVDAC
+NB_VCCD_QDAC
+NB_VCCD_HPLL
Place on the Edge
INVENTEC
TITLE
Perugia10M
CANTIGA-6
SIZE A3
CODE CS
DOC. NUMBER 1310A2250501
REV x01
SHEET 24 OF 63
CHANGE by Loren
10-Oct-2008

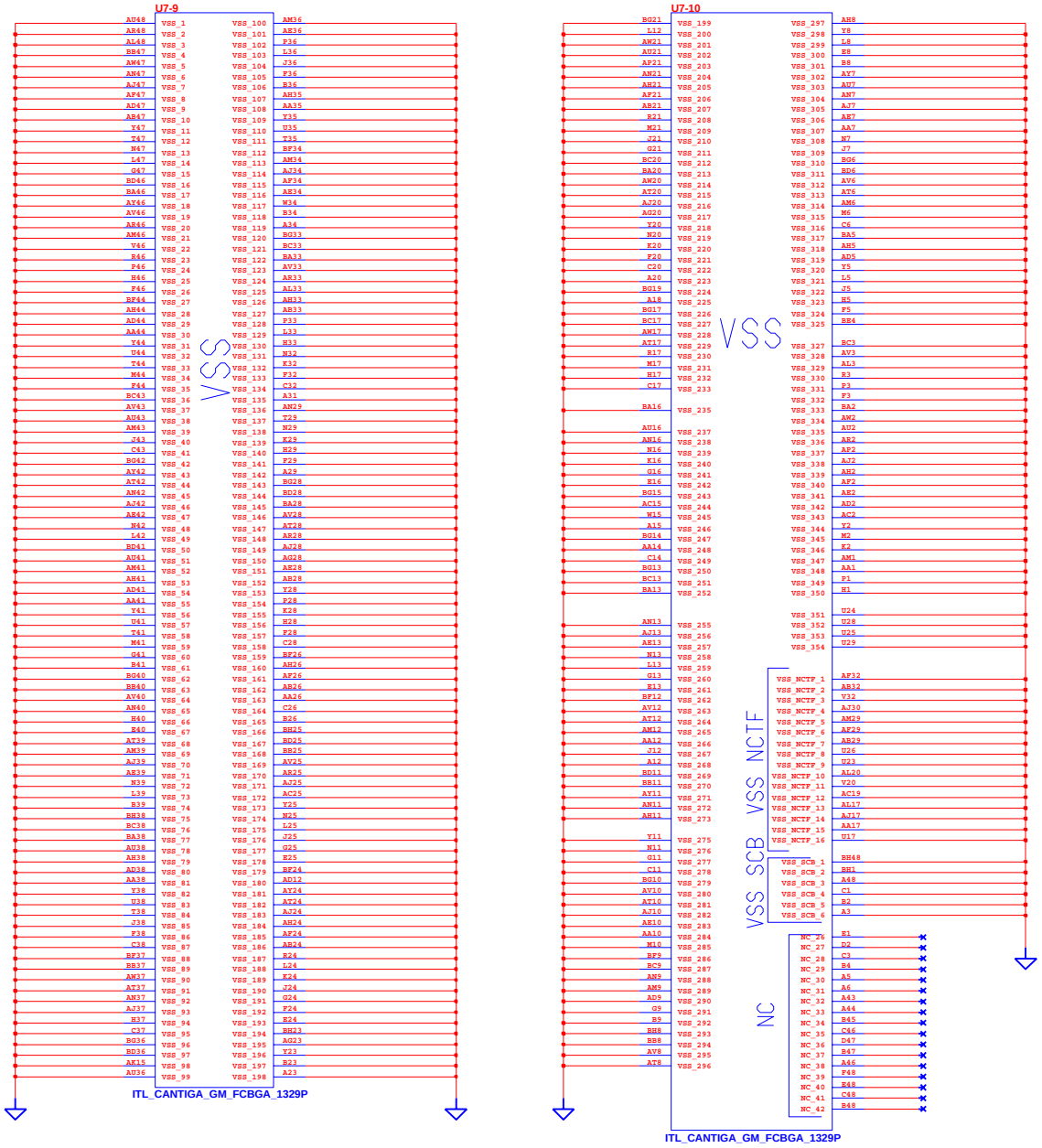

CHANGE by	Loren	10-Oct-2008	

INVENTEC

TITLE *Perugia10M*
CANTIGA-7

SIZE	CODE	DOC. NUMBER	REV
A3	CS	1310A2250501	x01

SHEET 25 OF 63

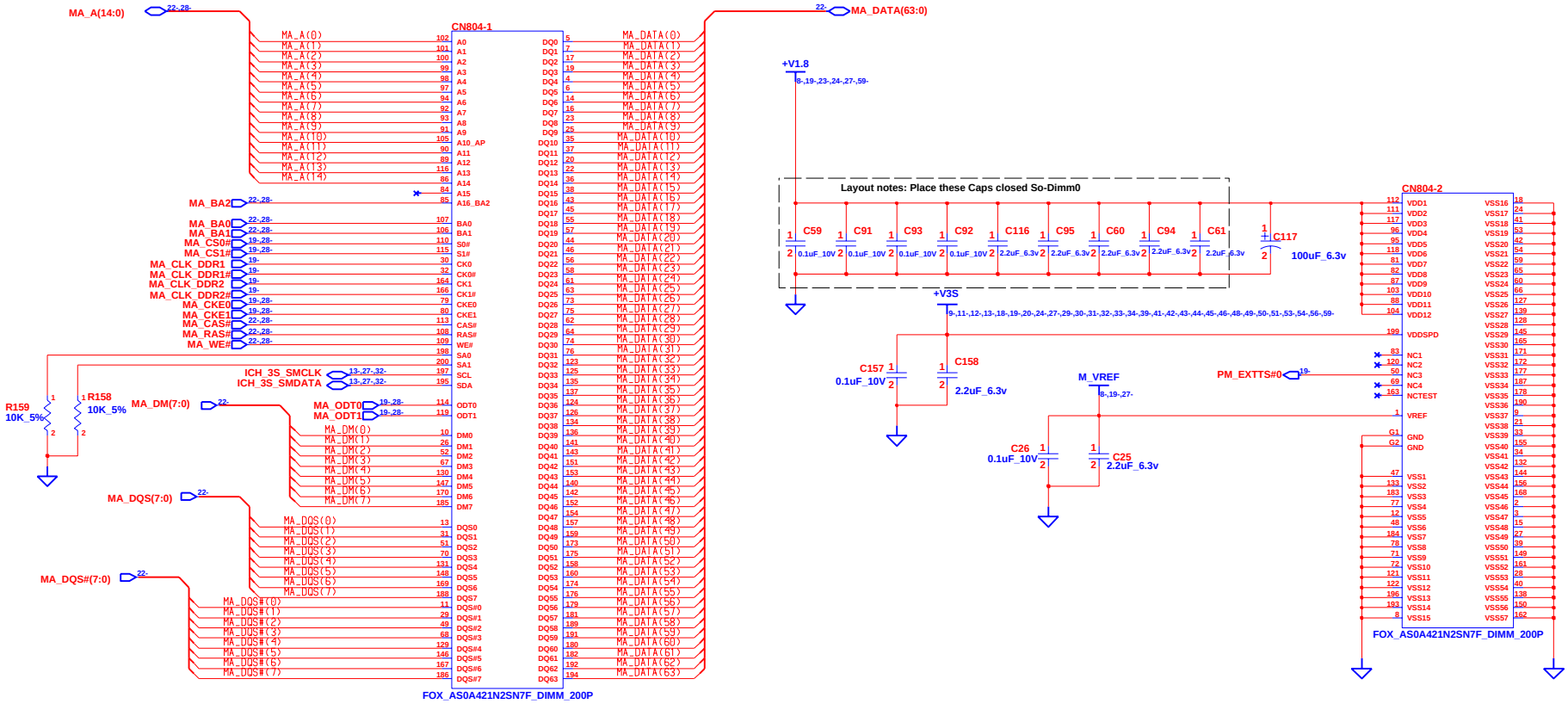

SO DIMM0

SLOT A

INVENTEC			
TITLE	Perugia10M DDR2-DIMM-0		
SIZE A3	CODE CS	DOC. NUMBER 1310A2250501	REV x01
CHANGE by Loren	10-Oct-2008	SHEET 26 OF 63	

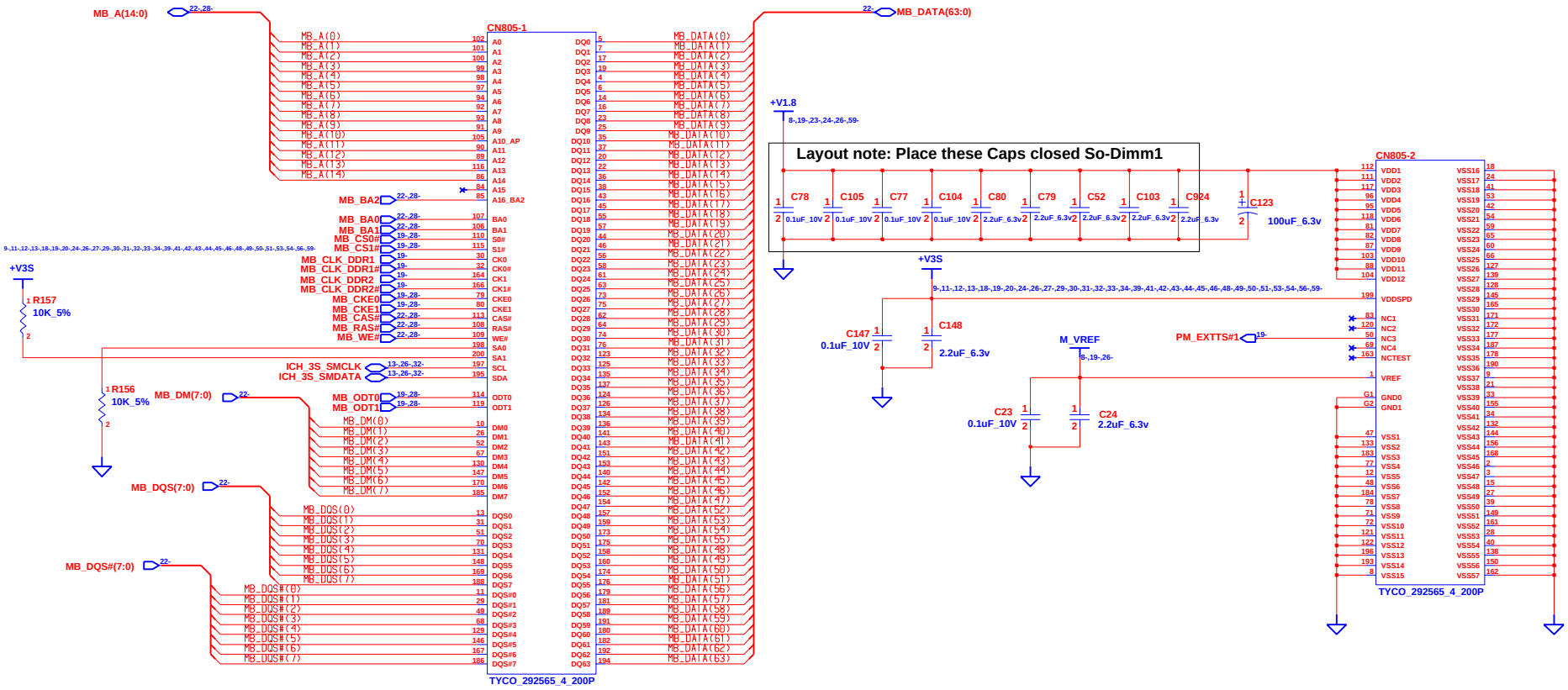

SO DIMM1

SLOT B

INVENTEC			
TITLE Perugia10M DDR2-DIMM1			
SIZE A3	CODE CS	DOC. NUMBER 1310A2250501	REV x01
CHANGE by Loren	11-Oct-2008	SHEET 27 OF 63	

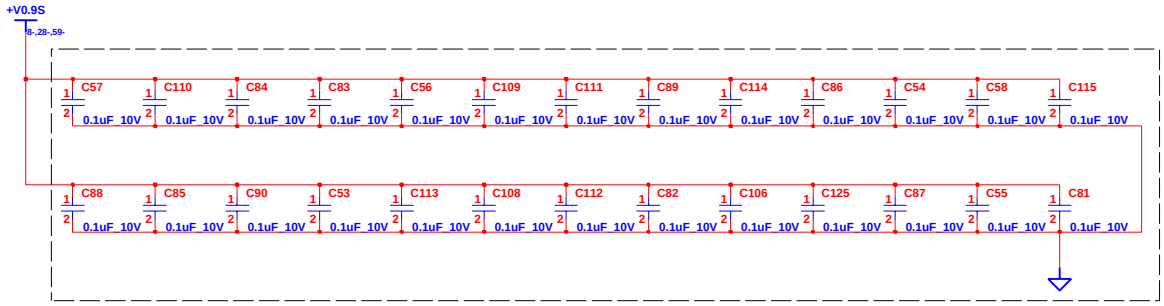

LAYOUT NOTES : PLACE ONE CAP CLOSE TO EVERY 2 PULL UP RESISTOR TERMINATED TO +V0.9S

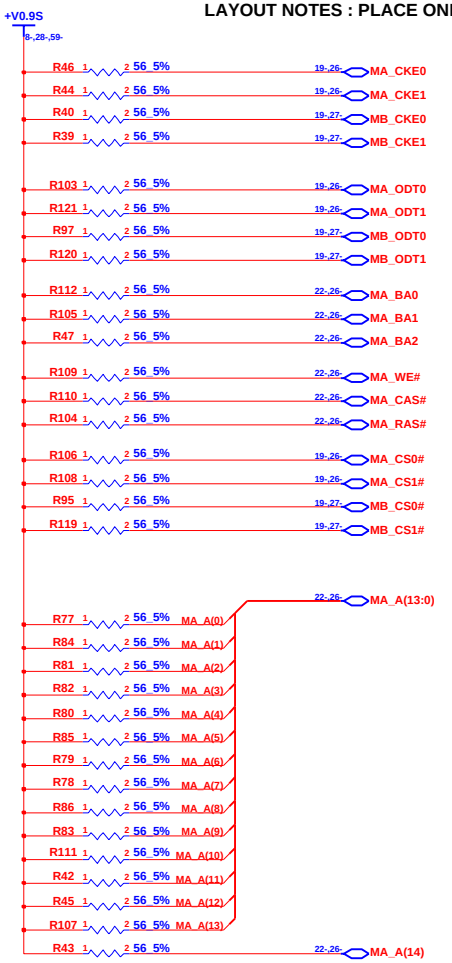

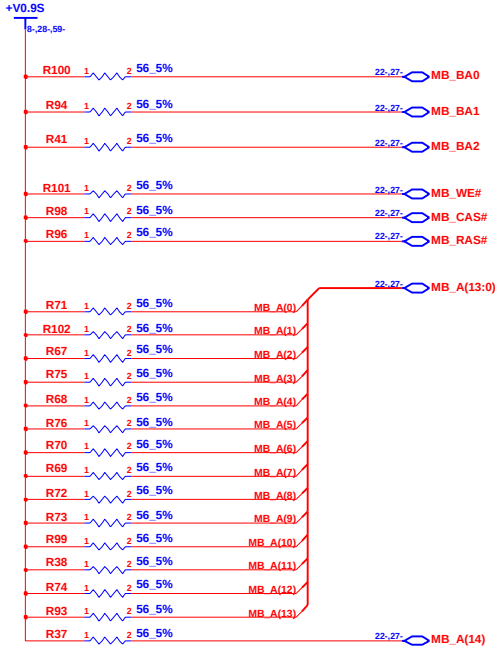

CHANGE by	Loren	27-Sep-2003	

INVENTEC

TITLE *Perugia10M*
DDR2-DAMPING

SIZE	CODE	DOC. NUMBER	REV
A3	CS	1310A2250501	x01

SHEET 28 OF 63

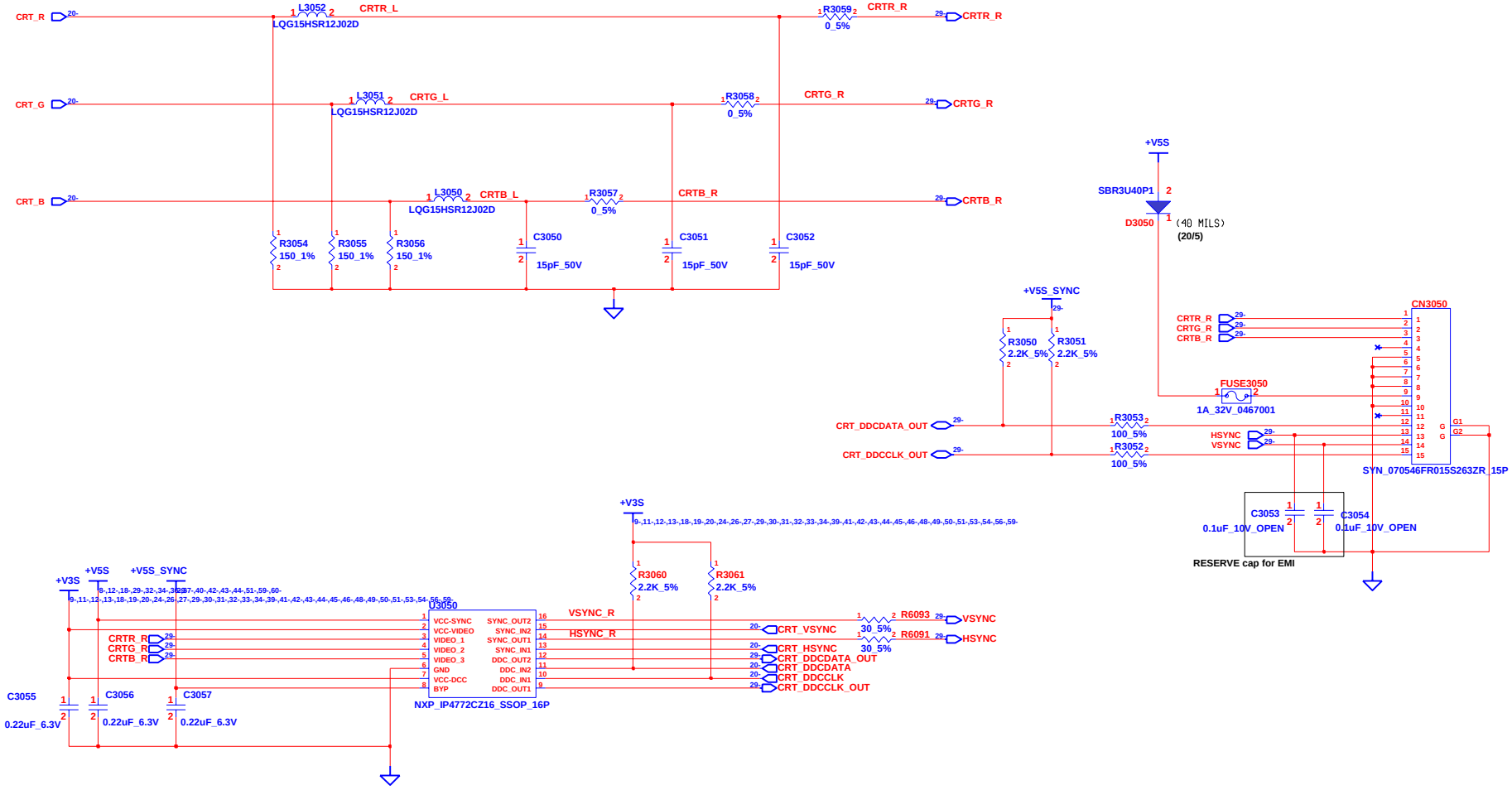

CHANGE by	Loren	10-Oct-2008	

INVENTEC

TITLE *Perugia10M*
CRT CONN

SIZE	CODE	DOC. NUMBER	REV
A3	CS	1310A2250501	x01

SHEET 29 OF 63

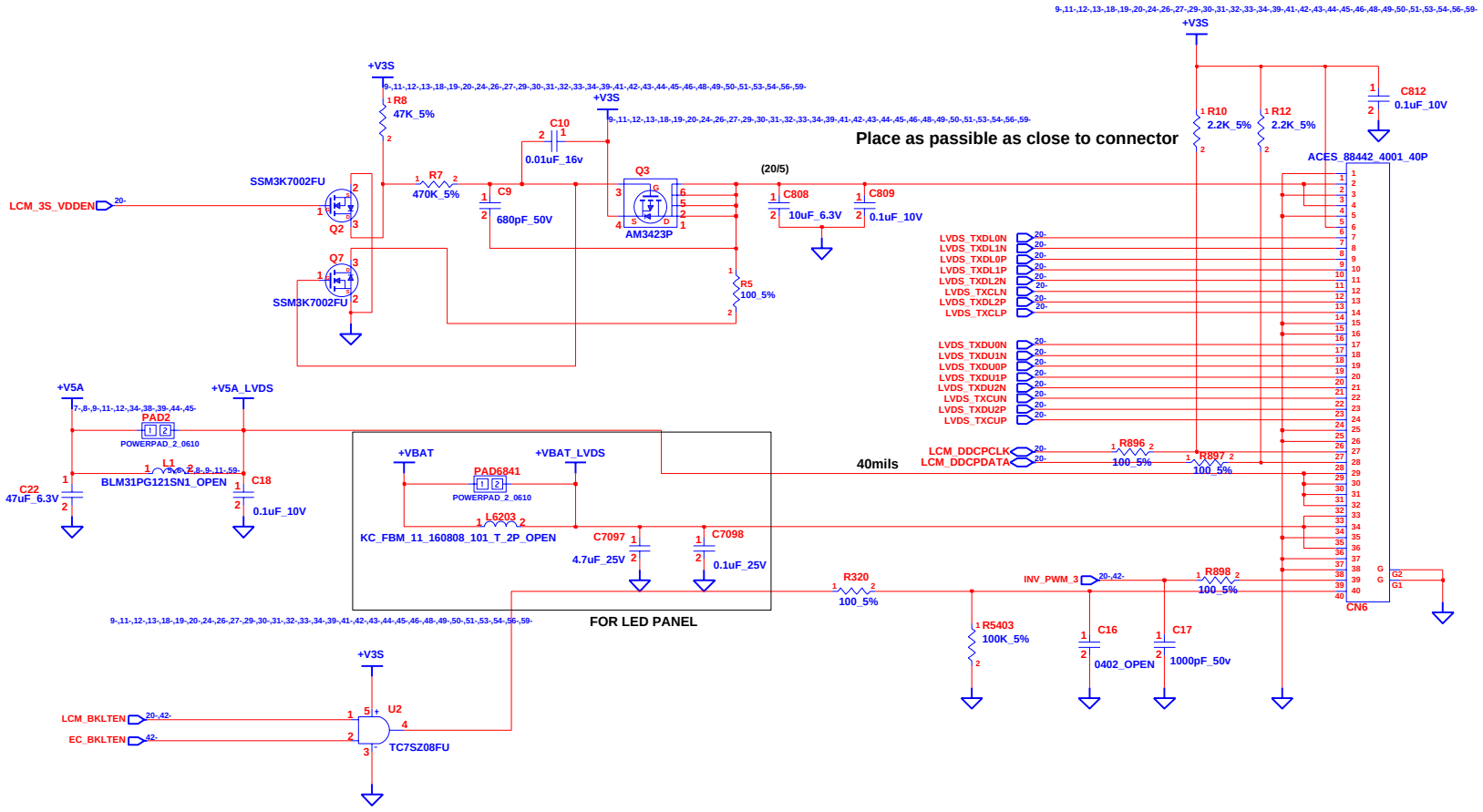

INVENTEC

TITLE *Perugia10M*
LCD CONN

SIZE	CODE	DOC. NUMBER	REV
A3	CS	*1310A2250501*	*x01*

SHEET 30 OF 63

CHANGE by *Loren* *10-Oct-2008*

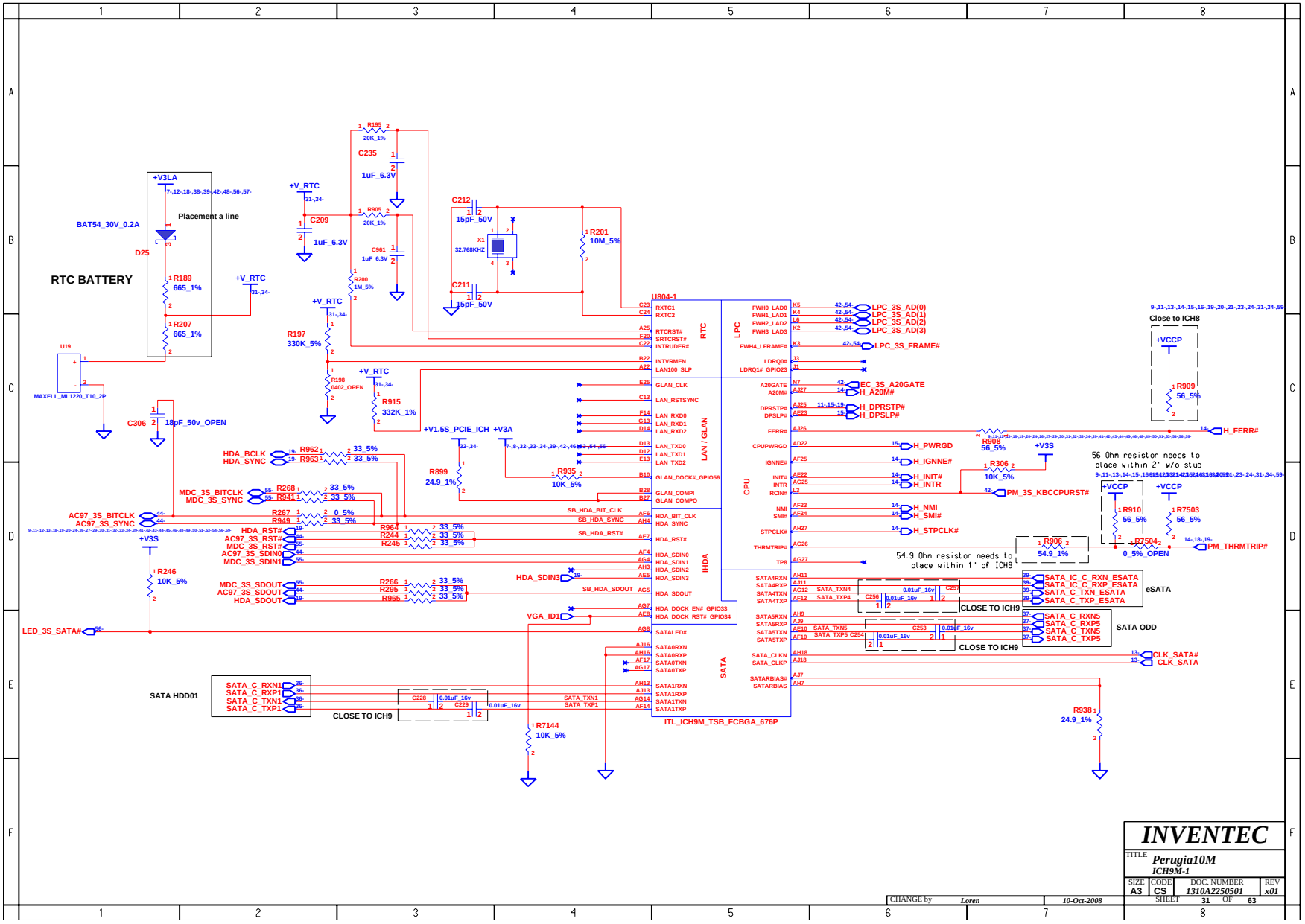

INVENTEC

TITLE Perugia10M
ICH9M-1

SIZE	CODE	DOC. NUMBER	REV
A3	CS	1310A2250501	x01

SHEET 31 OF 63

CHANGE by Loren 10-Oct-2008

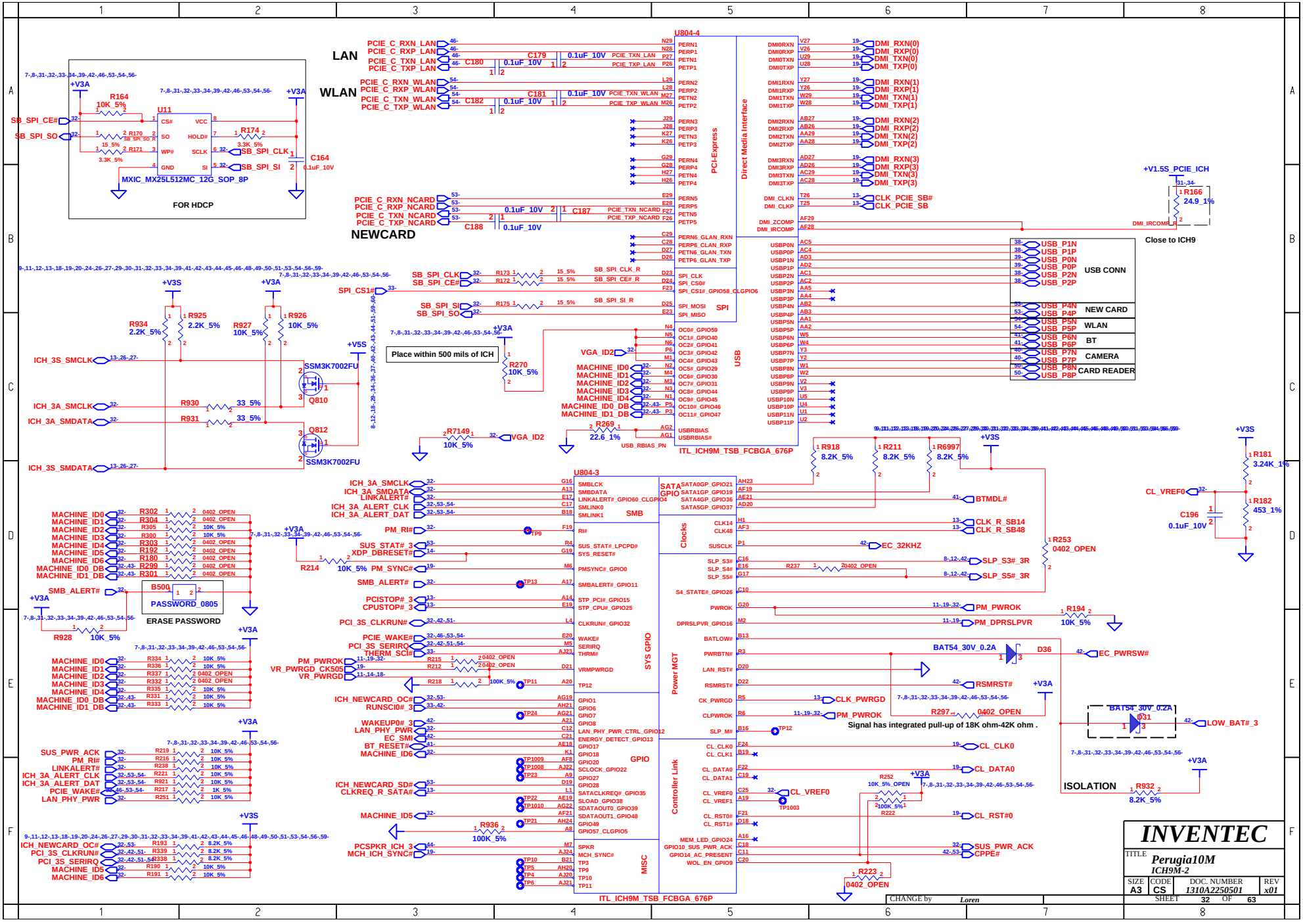
LAN
WLAN
NEWCARD
U804-4
PCI-Express
Direct Media Interface
SPI
USB
ITL_ICH9M_TSB_FCBGA_676P
USB CONN
NEW CARD
WLAN
BT
CAMERA
CARD READER
Close to ICH9
+V1.5S_PCIE_ICH
R166 24.9_1%
DMI_IRCOMP
FOR HDCP
MXIC_MX25L512MC_12G_SOP_8P
U11
R164 10K_5%
R174 3.3K_5%
C164 0.1uF_10V
SB_SPI_CE#
SB_SPI_SO
SB_SPI_CLK
SB_SPI_SI
Place within 500 mils of ICH
SSM3K7002FU
Q810
Q812
ICH_3S_SMCLK
ICH_3A_SMCLK
ICH_3A_SMDATA
ICH_3S_SMDATA
VGA_ID2
R7149 10K_5%
R269 22.6_1%
R270 10K_5%
R918 8.2K_5%
R211 8.2K_5%
R6997 8.2K_5%
R181 3.24K_1%
R182 453_1%
CL_VREF0
C196 0.1uF_10V
R253 0402_OPEN
BTMDL#
CLK_R_SB14
CLK_R_SB48
EC_32KHZ
SLP_S3#_3R
SLP_S5#_3R
PM_PWROK
R194 10K_5%
PM_DPRSLPVR
BAT54_30V_0.2A
D36
EC_PWRSW#
RSMRST#
CLK_PWRGD
PM_PWROK
R297 0402_OPEN
Signal has integrated pull-up of 18K ohm-42K ohm .
D31
LOW_BAT#_3
ISOLATION
R932 8.2K_5%
CL_CLK0
CL_DATA0
CL_VREF0
CL_RST#0
SUS_PWR_ACK
CPPE#
R223 0402_OPEN
U804-3
SMB
SYS GPIO
GPIO
MISC
Clocks
Power MGT
Controller Link
ITL_ICH9M_TSB_FCBGA_676P
MACHINE_ID0
MACHINE_ID1
MACHINE_ID2
MACHINE_ID3
MACHINE_ID4
MACHINE_ID0_DB
MACHINE_ID1_DB
B500
PASSWORD_0805
ERASE PASSWORD
SMB_ALERT#
PM_RI#
SUS_STAT#_3
XDP_DBRESET#
PM_SYNC#
PCISTOP#_3
CPUSTOP#_3
PCI_3S_CLKRUN#
PCIE_WAKE#
PCI_3S_SERIRQ
THERM_SCI#
VR_PWRGD_CK505
VR_PWRGD
ICH_NEWCARD_OC#
RUNSCI0#_3
WAKEUP0#_3
LAN_PHY_PWR
EC_SMI
BT_RESET#
ICH_NEWCARD_SD#
CLKREQ_R_SATA#
PCSPKR_ICH_3
MCH_ICH_SYNC#
R936 100K_5%
R214 10K_5%
R928 10K_5%
SUS_PWR_ACK
PM_RI#
LINKALERT#
ICH_3A_ALERT_CLK
ICH_3A_ALERT_DAT
PCIE_WAKE#
LAN_PHY_PWR
INVENTEC
TITLE
Perugia10M
ICH9M-2
SIZE A3
CODE CS
DOC. NUMBER 1310A2250501
REV x01
SHEET 32 OF 63
CHANGE by Loren

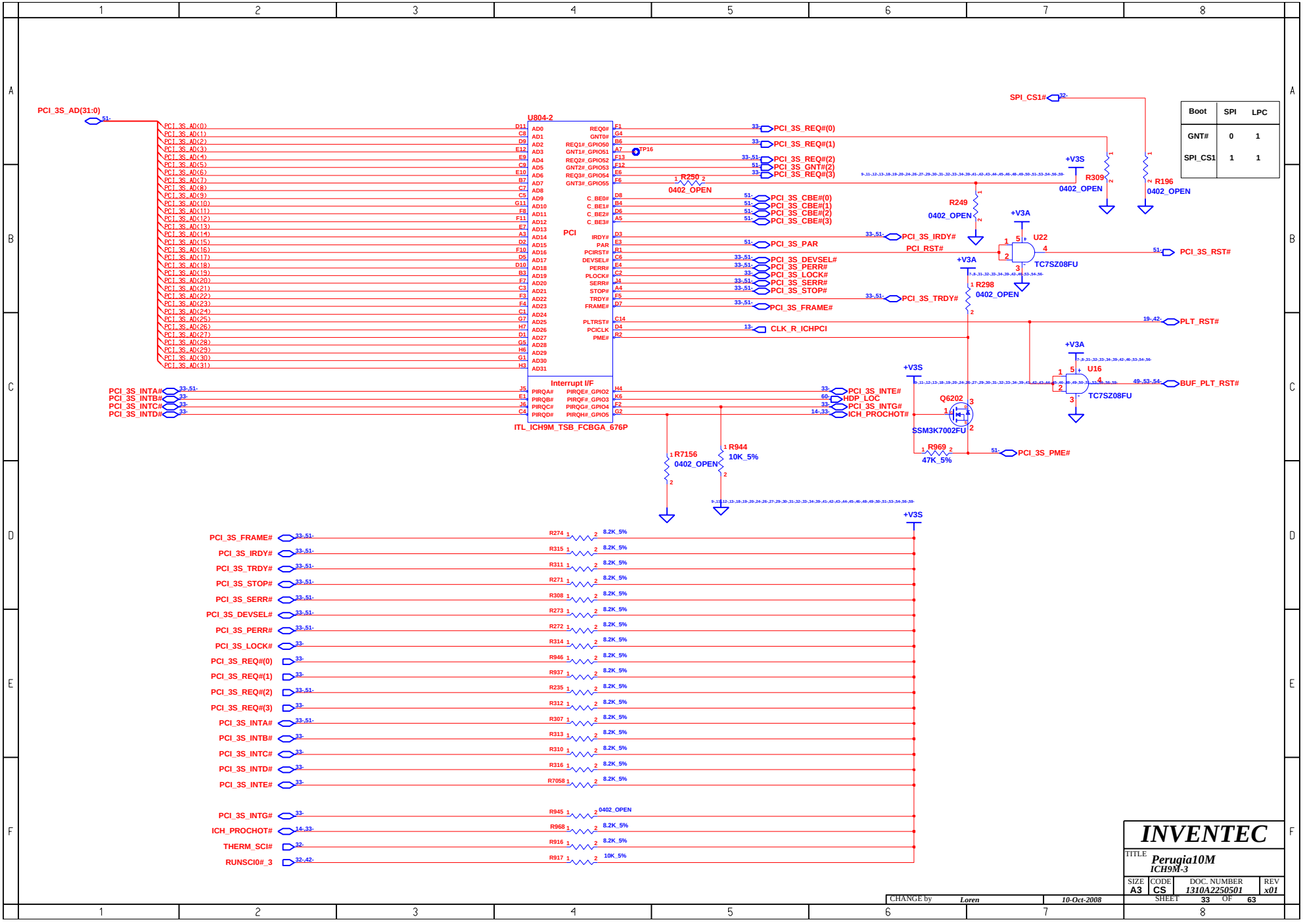

Boot	SPI	LPC
GNT#	0	1
SPI_CS1	1	1

INVENTEC

TITLE *Perugia10M*
ICH9M-3

SIZE	CODE	DOC. NUMBER	REV
A3	CS	1310A2250501	x01

SHEET 33 OF 63

CHANGE by *Loren* *10-Oct-2008*

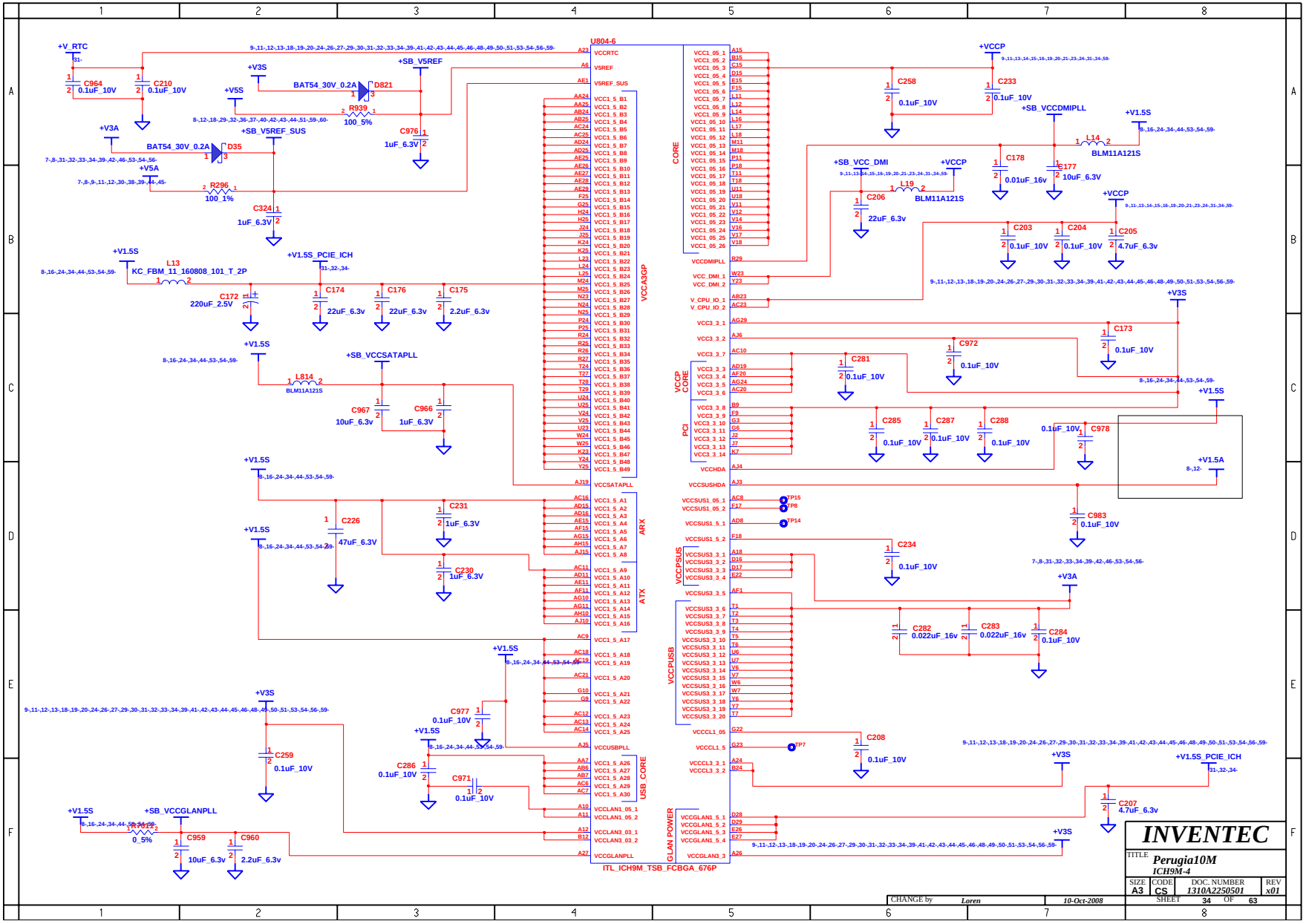
U804-6
ITL_ICH9M_TSB_FCBGA_676P
+V_RTC
C964 0.1uF_10V
C210 0.1uF_10V
+V3S
+V5S
BAT54_30V_0.2A
D821
R939 100_5%
+SB_V5REF
C976 1uF_6.3V
+V3A
+SB_V5REF_SUS
D35
+V5A
R296 100_1%
C324 1uF_6.3V
+V1.5S
L13 KC_FBM_11_160808_101_T_2P
+V1.5S_PCIE_ICH
C172 220uF_2.5V
C174 22uF_6.3v
C176 22uF_6.3v
C175 2.2uF_6.3v
+SB_VCCSATAPLL
L814 BLM11A121S
C967 10uF_6.3v
C966 1uF_6.3V
C226 47uF_6.3V
C231 1uF_6.3V
C230 1uF_6.3V
C977 0.1uF_10V
C259 0.1uF_10V
C286 0.1uF_10V
C971 0.1uF_10V
+V1.5S
+SB_VCCGLANPLL
R912 0_5%
C959 10uF_6.3v
C960 2.2uF_6.3v
+VCCP
C258 0.1uF_10V
C233 0.1uF_10V
+SB_VCCDMIPLL
L14 BLM11A121S
C178 0.01uF_16v
C177 10uF_6.3V
+SB_VCC_DMI
L19 BLM11A121S
C206 22uF_6.3v
C203 0.1uF_10V
C204 0.1uF_10V
C205 4.7uF_6.3v
C173 0.1uF_10V
C972 0.1uF_10V
C281 0.1uF_10V
C285 0.1uF_10V
C287 0.1uF_10V
C288 0.1uF_10V
C978 0.1uF_10V
C983 0.1uF_10V
C234 0.1uF_10V
C282 0.022uF_16v
C283 0.022uF_16v
C284 0.1uF_10V
C208 0.1uF_10V
C207 4.7uF_6.3v
TP15
TP8
TP14
TP7
CORE
VCCA3GP
VCCP CORE
PCI
ARX
ATX
VCCPSUS
VCCPUSB
USB_CORE
GLAN POWER
INVENTEC
TITLE Perugia10M
ICH9M-4
SIZE A3
CODE CS
DOC. NUMBER 1310A2250501
REV x01
SHEET 34 OF 63
CHANGE by Loren
10-Oct-2008

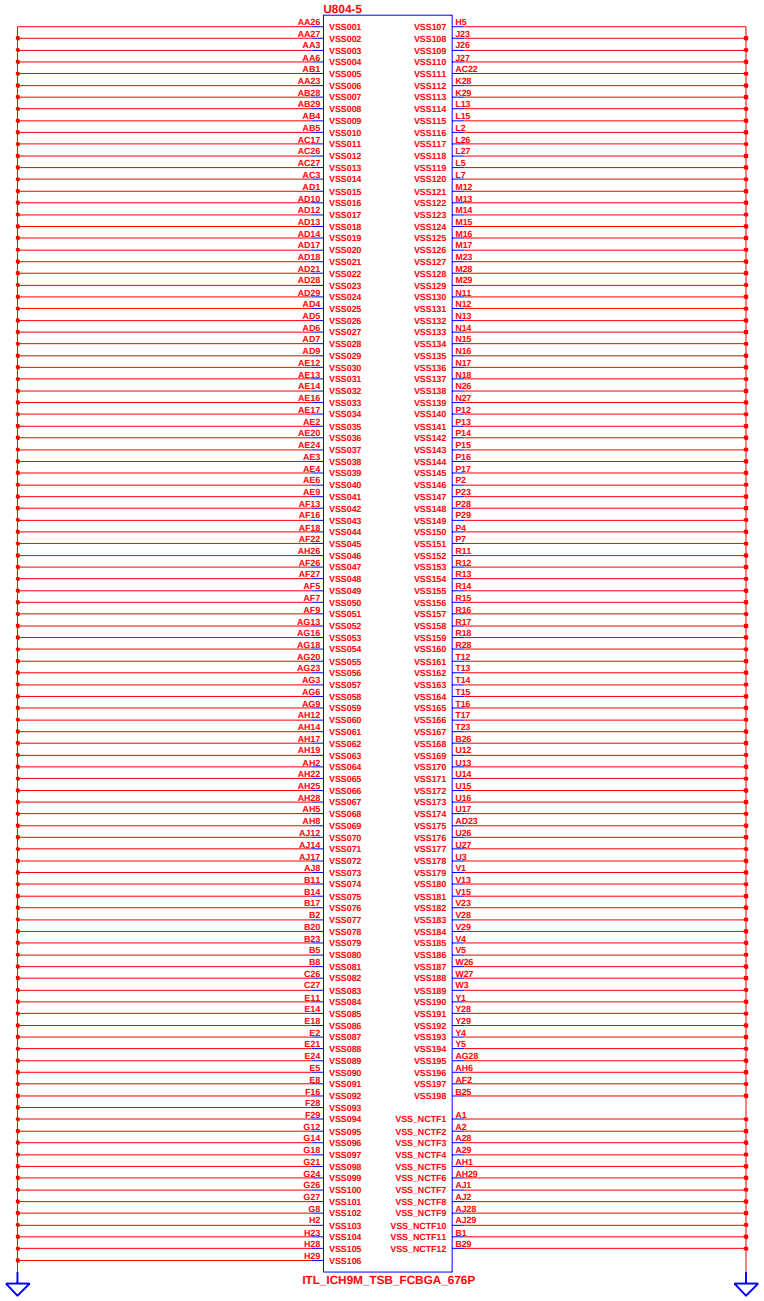

CHANGE by	Loren	10-Oct-2008	

INVENTEC

TITLE *Perugia10M*
ICH9M-5

SIZE	CODE	DOC. NUMBER	REV
A3	CS	1310A2250501	x01

SHEET 35 OF 63

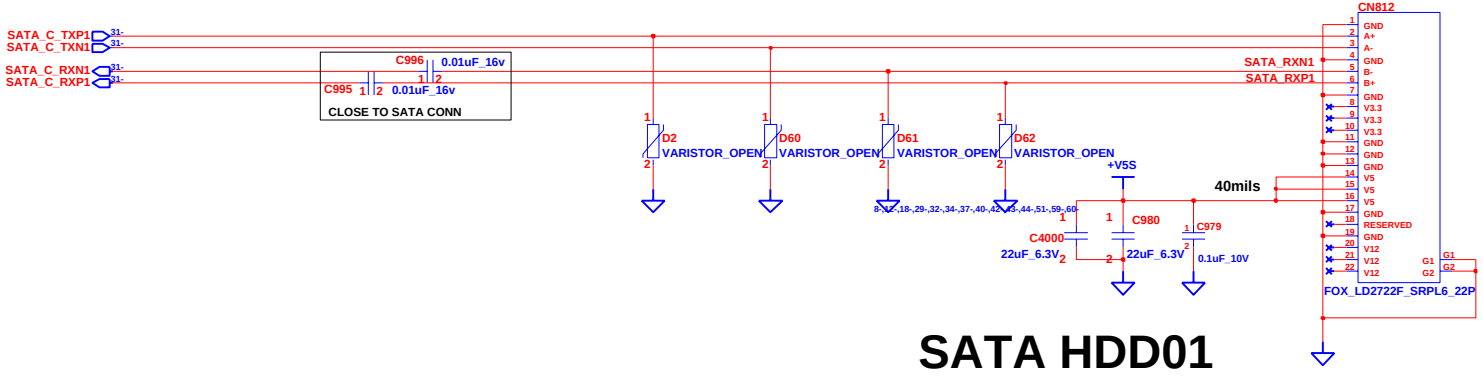

SATA HDD01

INVENTEC			
TITLE Perugia10M HDD CONN			
SIZE A3	CODE CS	DOC. NUMBER 1310A2250501	REV x01
CHANGE by Loren	11-Oct-2008	SHEET 36 OF 63	

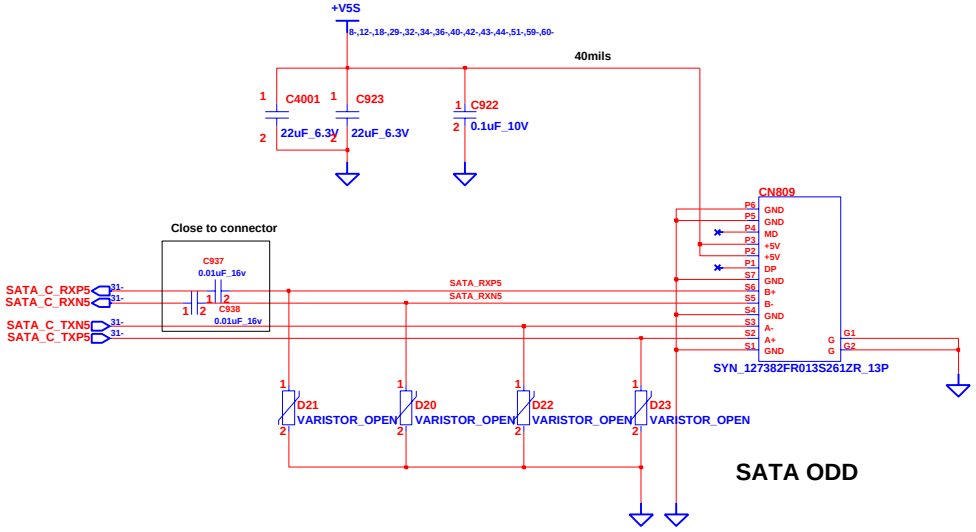

SATA ODD

INVENTEC			
TITLE Perugia10M SATA ODD			
SIZE A3	CODE CS	DOC. NUMBER 1310A2250501	REV x01
CHANGE by Loren	10-Oct-2008	SHEET 37 OF 63	

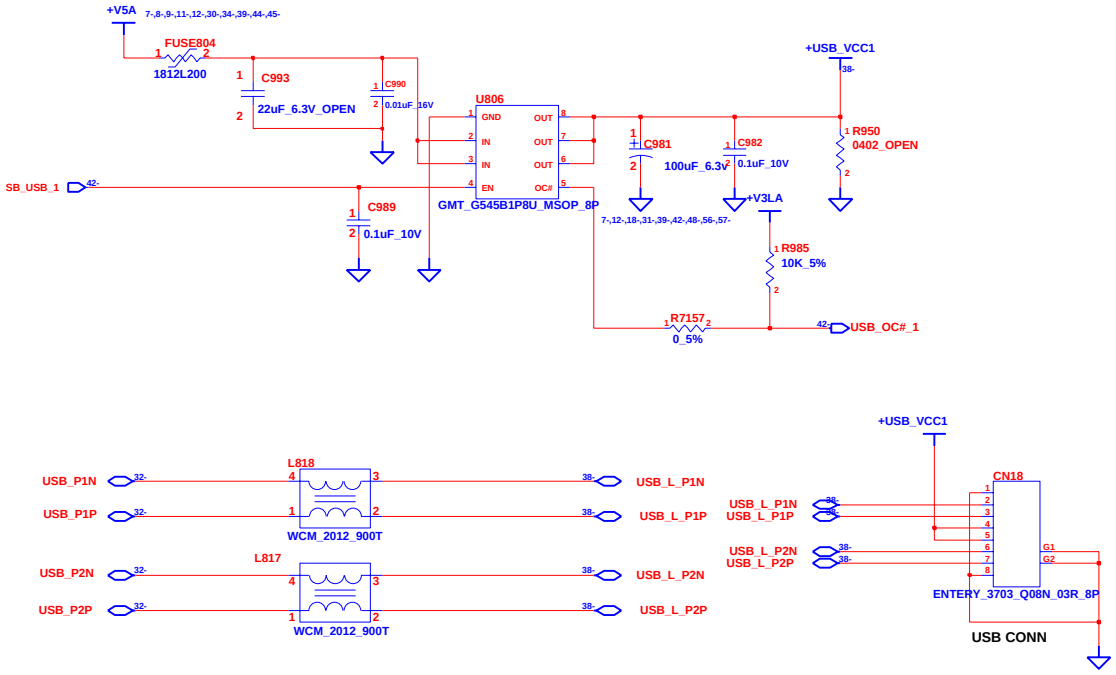

INVENTEC

TITLE **Perugia10M**
USB CONN/USB(DB)

SIZE	CODE	DOC. NUMBER	REV
A3	CS	1310A2250501	x01

SHEET 38 OF 63

CHANGE by *Loren* *10-Oct-2008*

EN	D0	D1	FUNCTION
0	X	X	STANDBY
1	0	0	DEFAULT
1	1	0	CH0->5DB
1	0	1	CH1->5DB
1	1	1	CH0,1->5DB

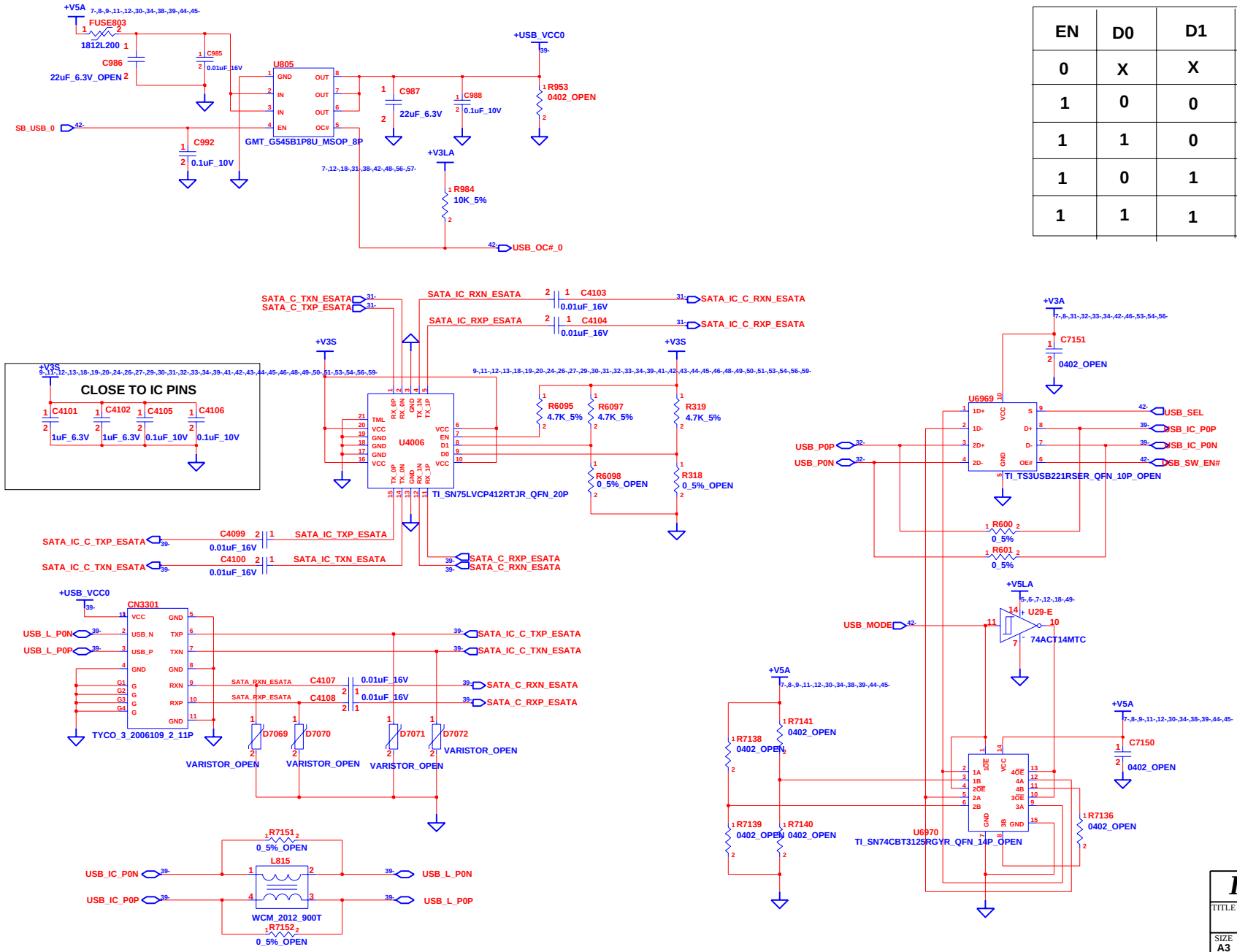

INVENTEC

TITLE *Perugia10M*
E-SATA CONN

SIZE	CODE	DOC. NUMBER	REV
A3	CS	1310A2250501	x01

SHEET 39 OF 63

CHANGE by *Loren* *10-Oct-2008*

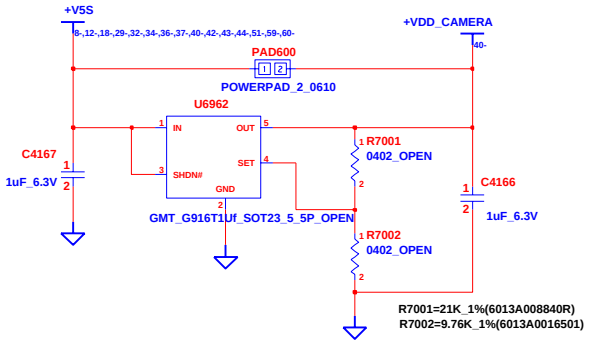

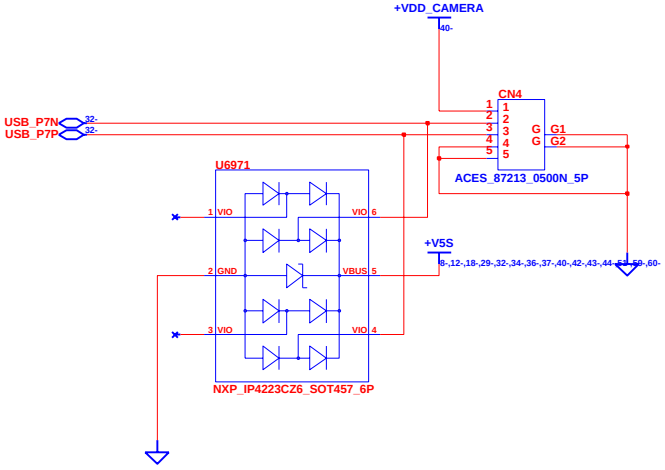

CHANGE by	Loren	10-Oct-2008	

INVENTEC

TITLE *Perugia10M*
Camera

SIZE	CODE	DOC. NUMBER	REV
A3	CS	1310A2250501	x01

SHEET 40 OF 63

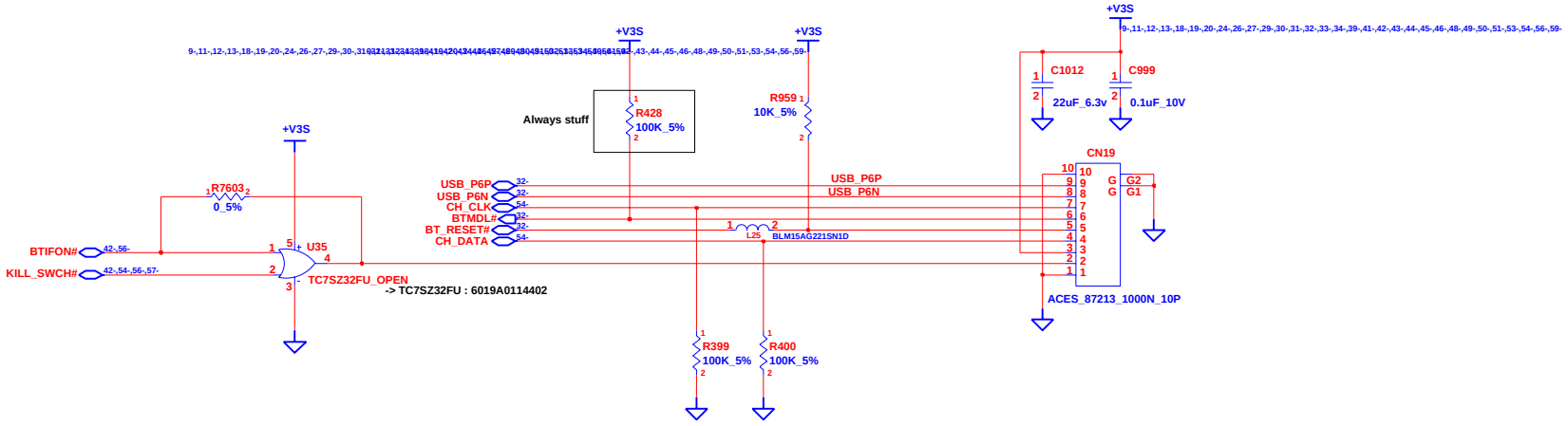

INVENTEC

TITLE **Perugia10M**
Bluetooth

SIZE	CODE	DOC. NUMBER	REV
A3	CS	1310A2250501	x01

SHEET 41 OF 63

CHANGE by Loren 10-Oct-2008

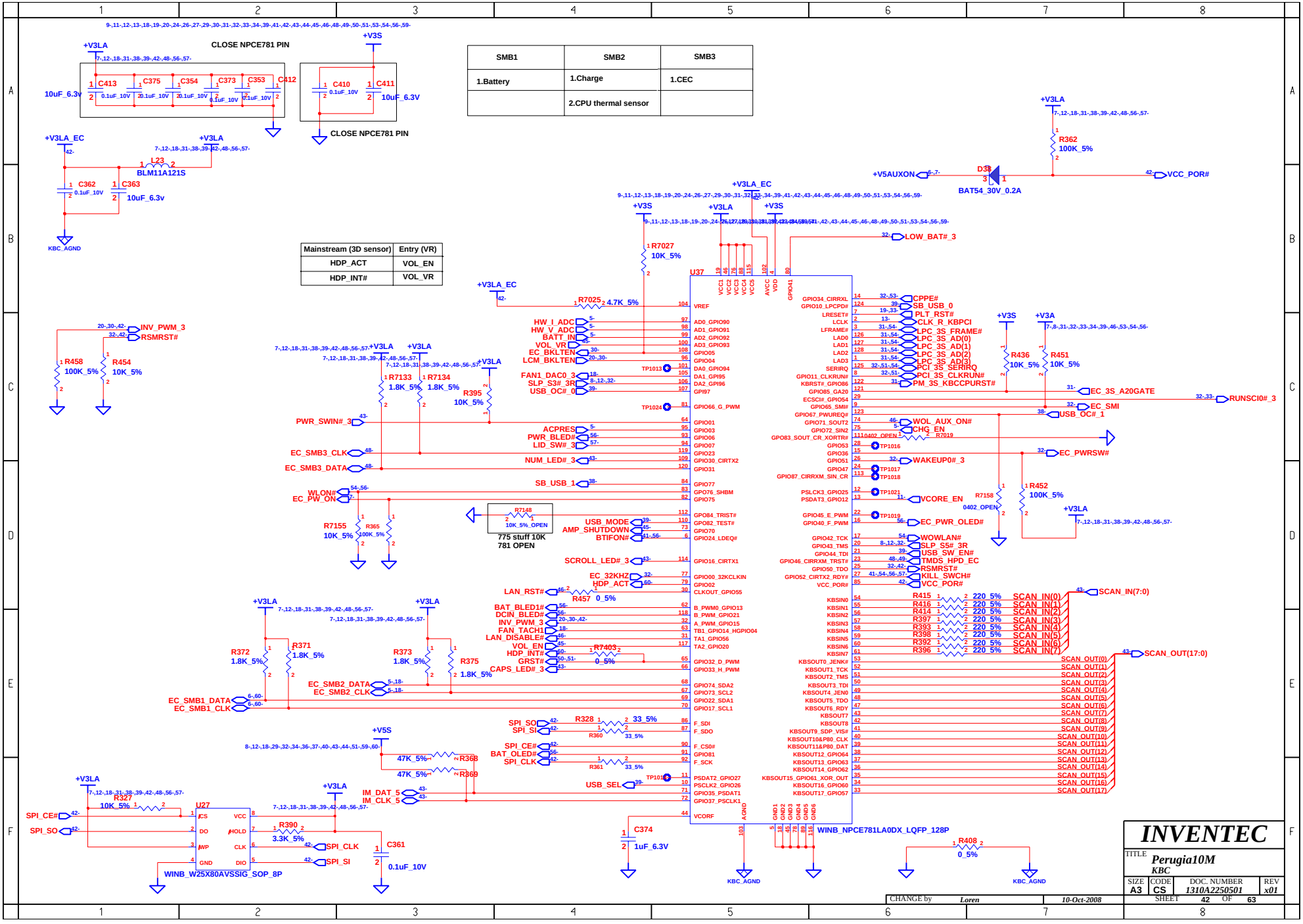

SMB1	SMB2	SMB3
1.Battery	1.Charge	1.CEC
	2.CPU thermal sensor	

Mainstream (3D sensor)	Entry (VR)
HDP_ACT	VOL_EN
HDP_INT#	VOL_VR

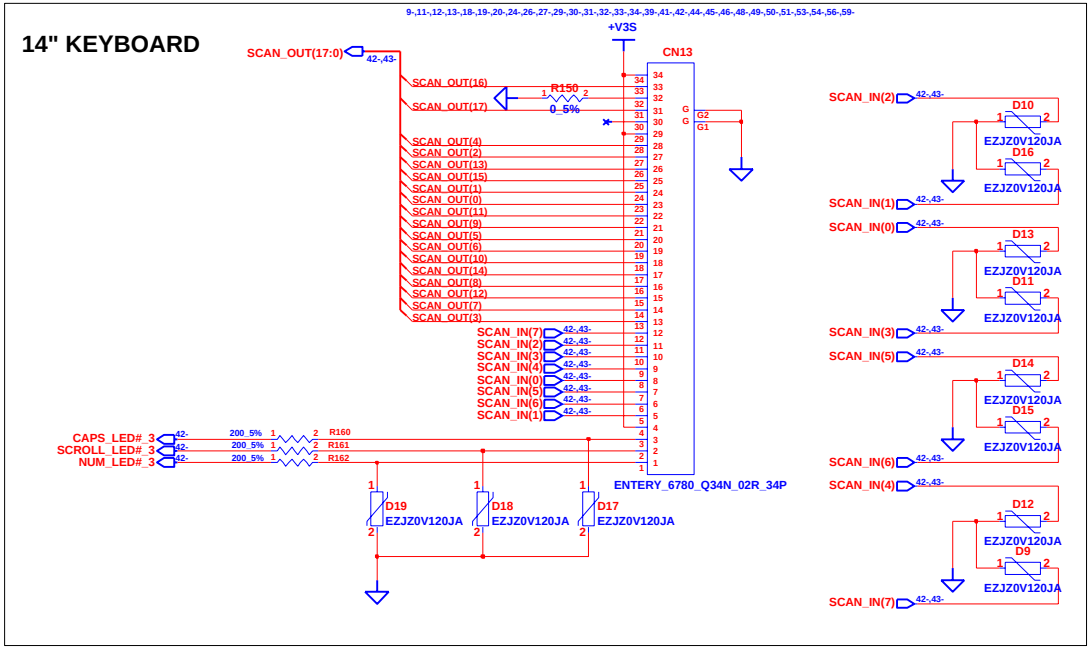

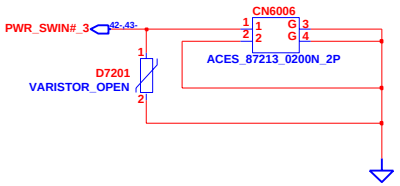

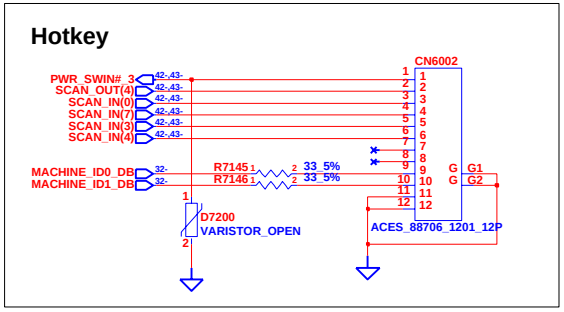

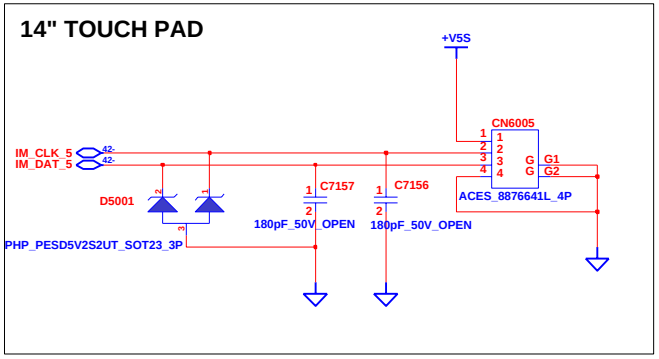

INVENTEC			
TITLE Perugia10M K/B & TP/B CONN			
SIZE A3	CODE CS	DOC. NUMBER 1310A2250501	REV x01
CHANGE by Loren	10-Oct-2008	SHEET 43 OF 63	

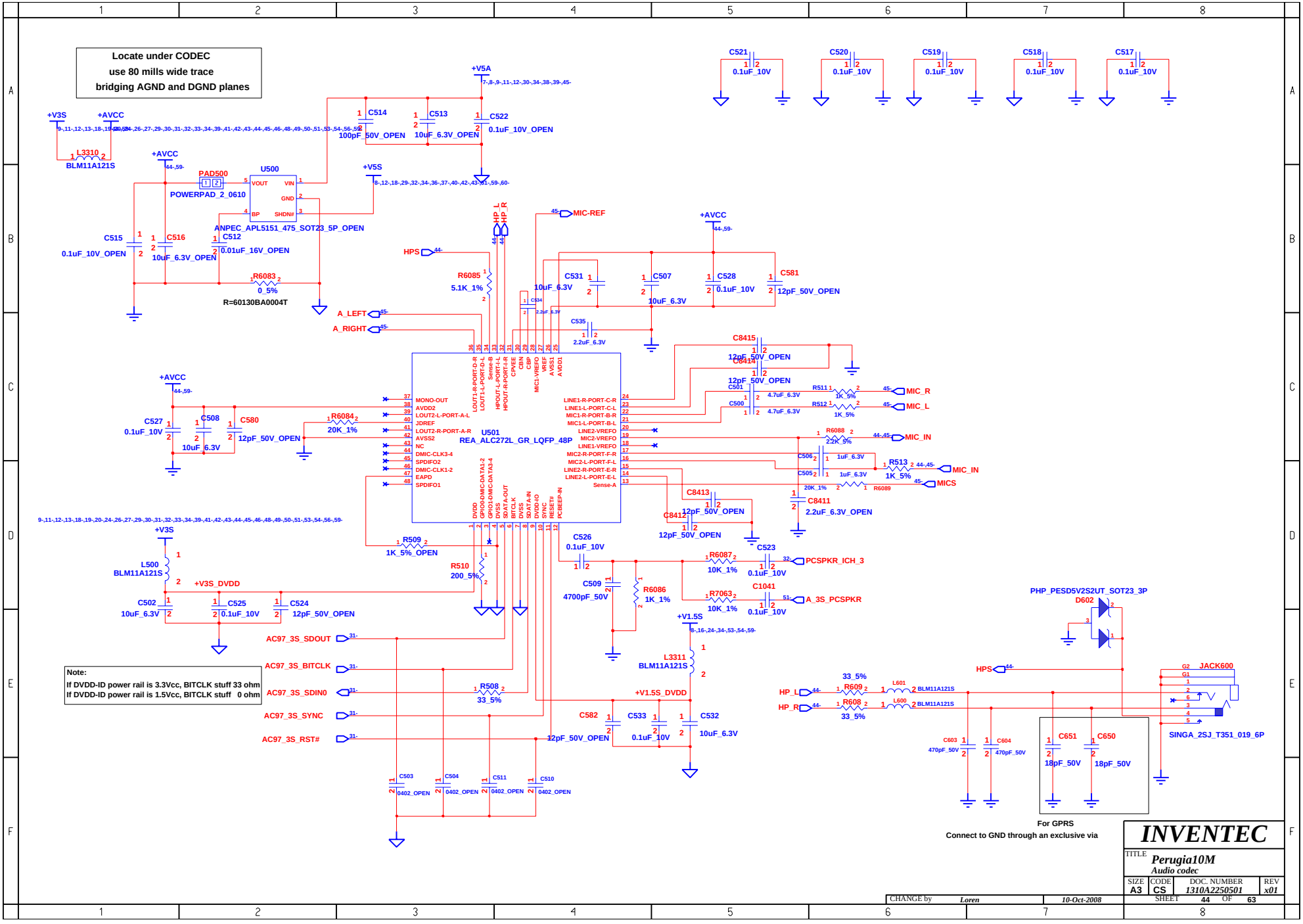
Locate under CODEC
use 80 mills wide trace
bridging AGND and DGND planes
U501
REA_ALC272L_GR_LQFP_48P
U500
ANPEC_APL5151_475_SOT23_5P_OPEN
POWERPAD_2_0610
R=60130BA0004T
JACK600
SINGA_2SJ_T351_019_6P
PHP_PESD5V2S2UT_SOT23_3P
Note:
If DVDD-ID power rail is 3.3Vcc, BITCLK stuff 33 ohm
If DVDD-ID power rail is 1.5Vcc, BITCLK stuff 0 ohm
For GPRS
Connect to GND through an exclusive via
INVENTEC
TITLE
Perugia10M
Audio codec
SIZE A3
CODE CS
DOC. NUMBER 1310A2250501
REV x01
SHEET 44 OF 63
CHANGE by Loren
10-Oct-2008

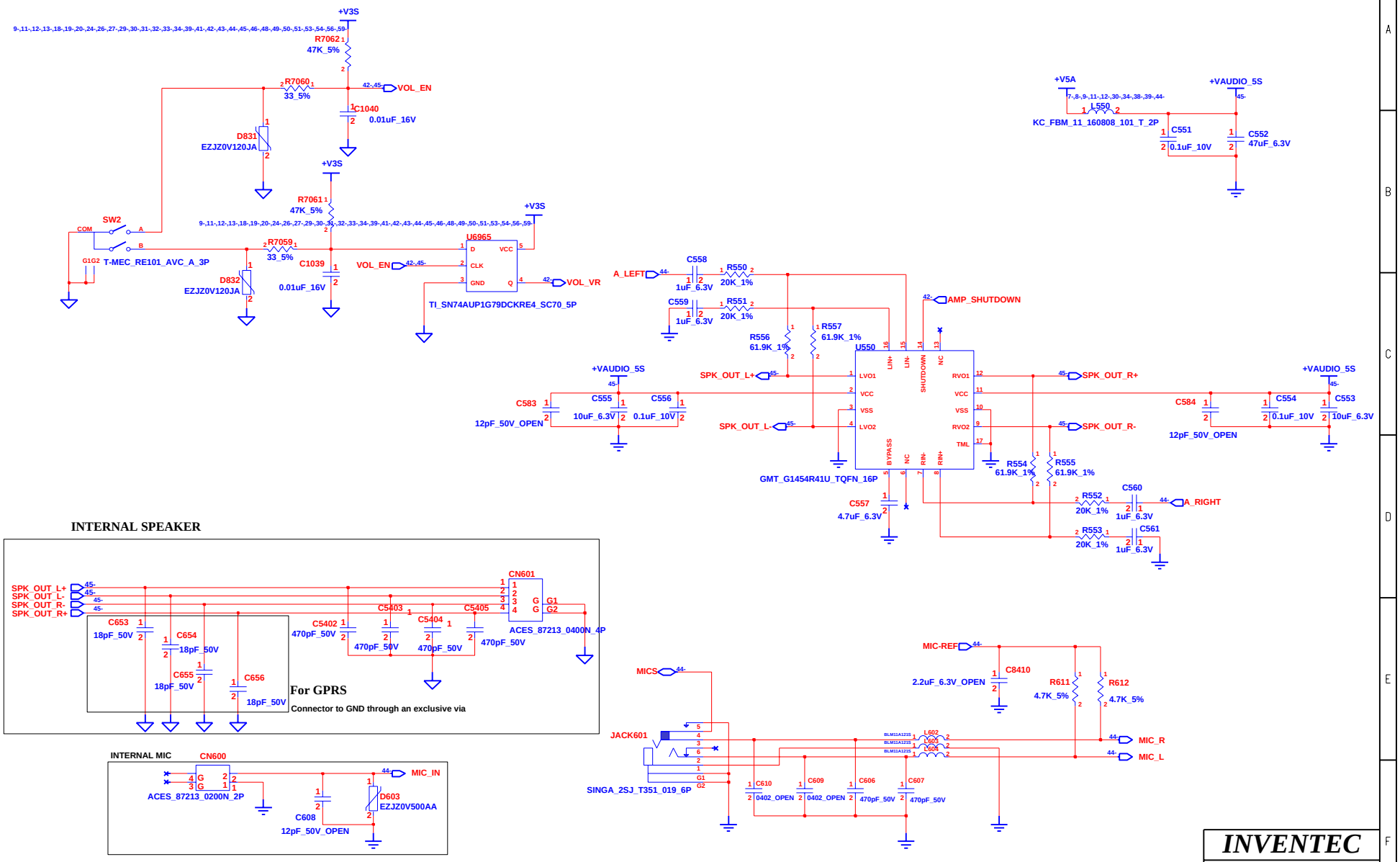

INVENTEC

TITLE **Perugia10M**
Audio AMP&MIC&Speaker

SIZE	CODE	DOC. NUMBER	REV
A3	CS	1310A2250501	x01

SHEET 45 OF 63

CHANGE by *Loren* *10-Oct-2008*

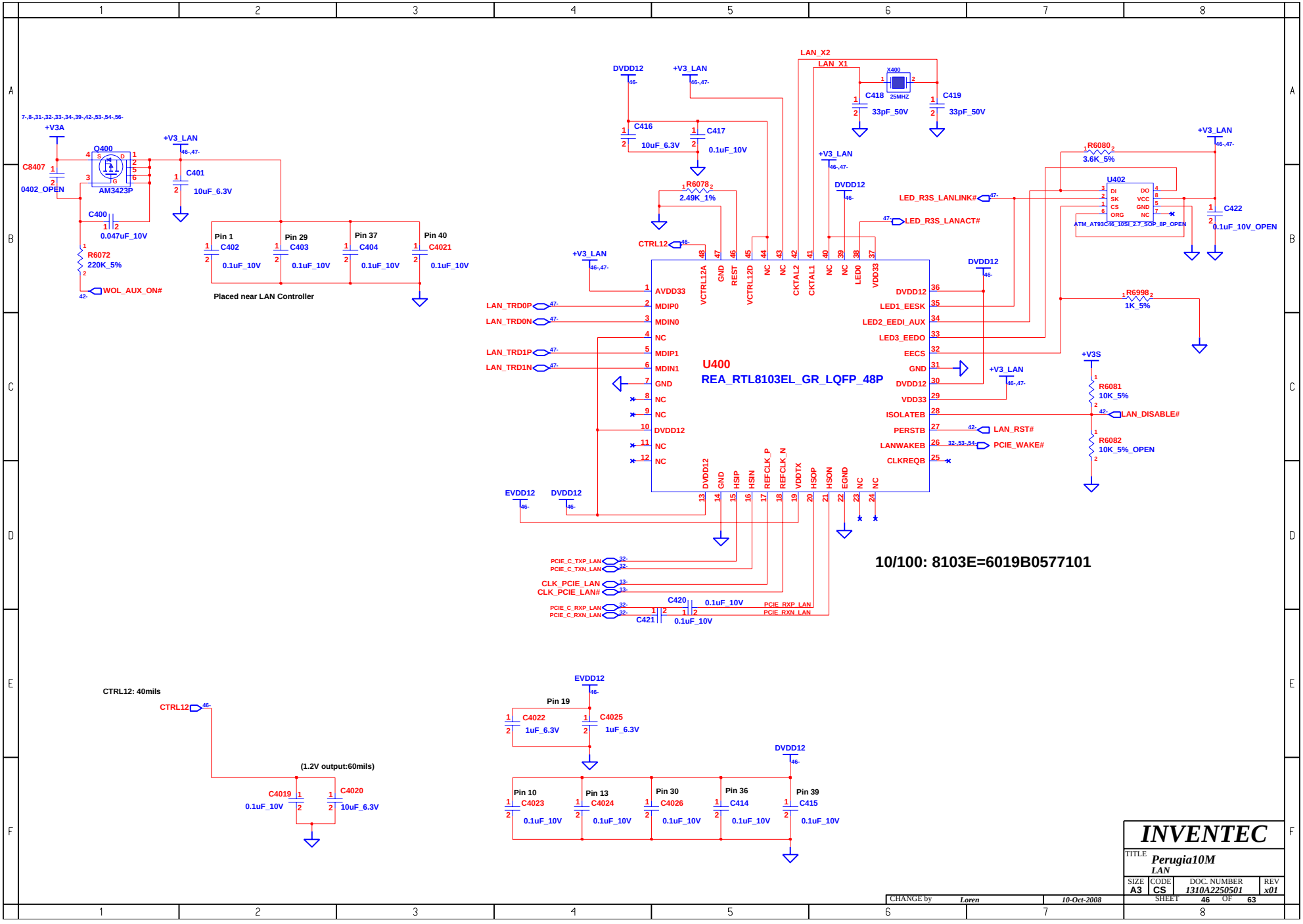

INVENTEC			
TITLE Perugia10M LAN			
SIZE A3	CODE CS	DOC. NUMBER 1310A2250501	REV x01
CHANGE by Loren	10-Oct-2008	SHEET 46 OF 63	

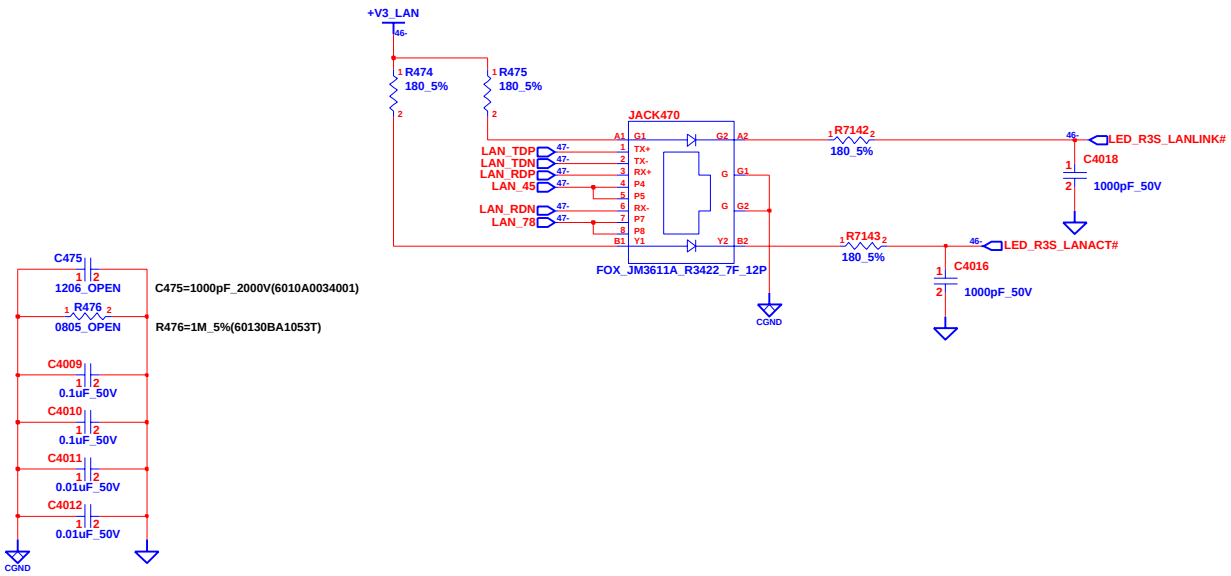

LEDS1-0	00	* 01	10	11
LED0	Tx/Rx	Tx/Rx	Tx	LINK10 ACT
LED1	LINK100	LINK 10/100/1000	LINK	LINK100 ACT
LED2	LINK10	LINK10/100	Rx	ULL
LED3	LINK1000	LINK1000	ULL	LINK1000 ACT

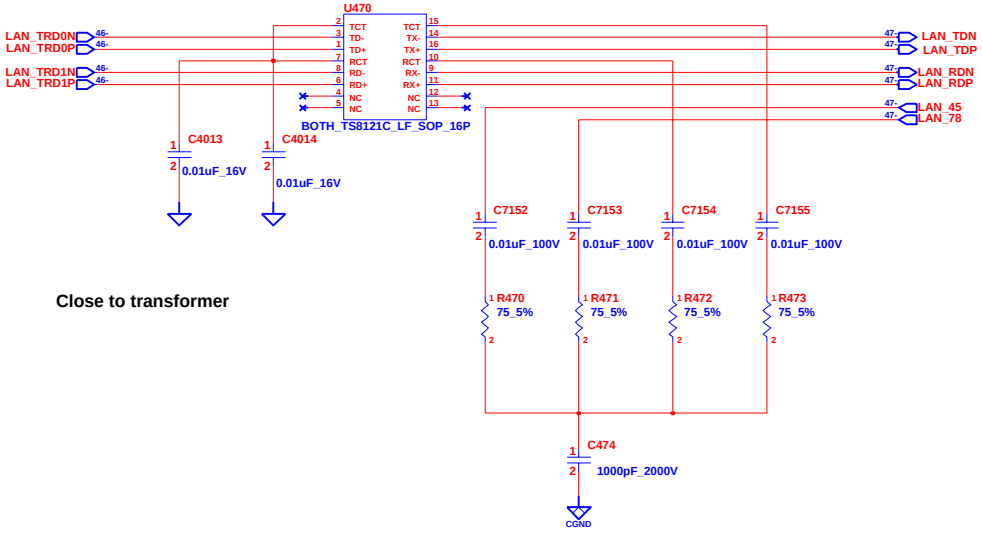

Close to transformer

CHANGE by	Loren	20-Oct-2008

INVENTEC

TITLE *Perugia10M*
Transformer&RJ45

SIZE	CODE	DOC. NUMBER	REV
A3	CS	1310A2250501	x01

SHEET 47 OF 63

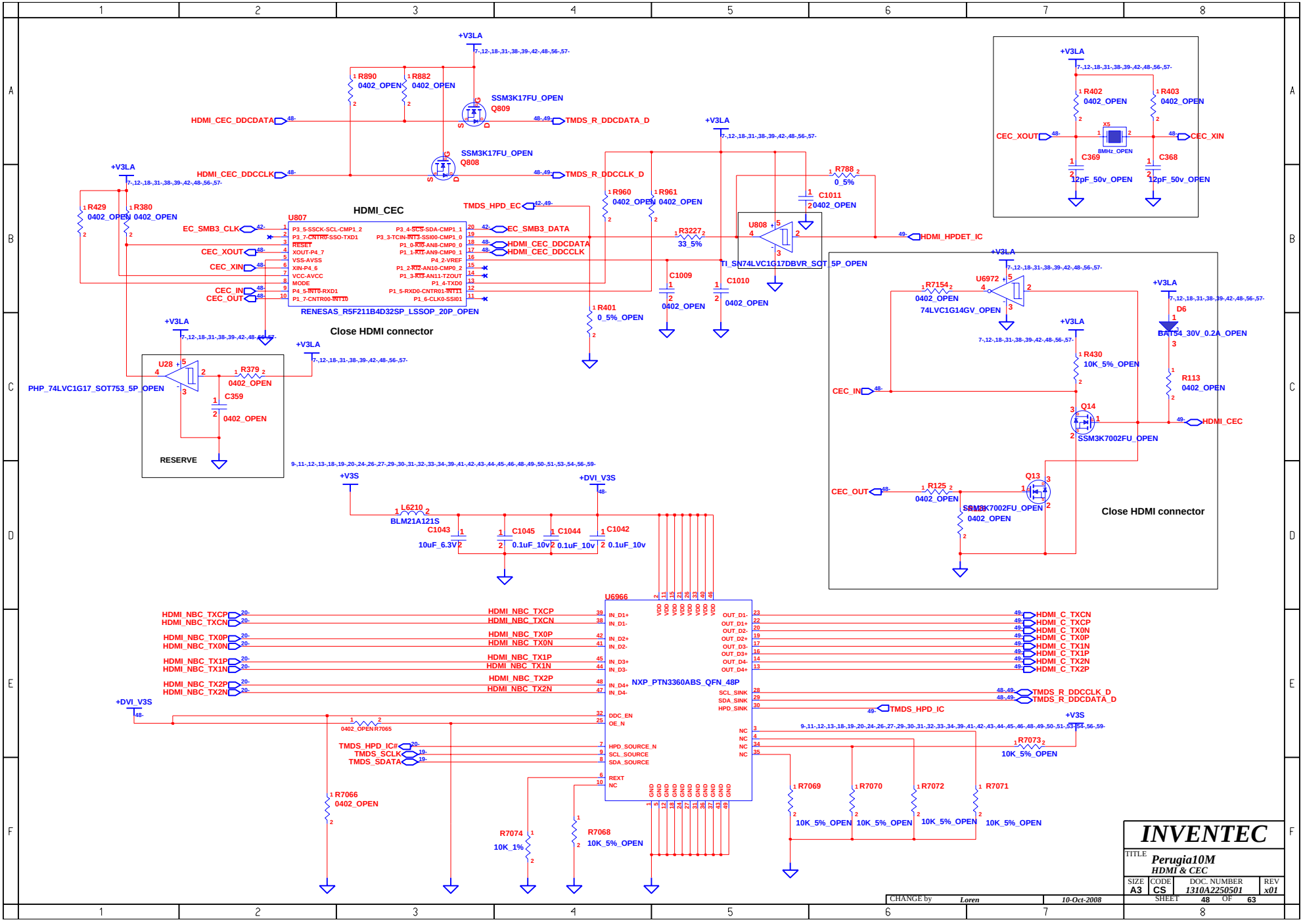
HDMI_CEC
U807
RENESAS_R5F211B4D32SP_LSSOP_20P_OPEN
Close HDMI connector
RESERVE
PHP_74LVC1G17_SOT753_5P_OPEN
TI_SN74LVC1G17DBVR_SOT_5P_OPEN
74LVC1G14GV_OPEN
BAT54_30V_0.2A_OPEN
SSM3K17FU_OPEN
SSM3K7002FU_OPEN
U6966
NXP_PTN3360ABS_QFN_48P
HDMI_HPDET_IC
HDMI_CEC
HDMI_CEC_DDCDATA
HDMI_CEC_DDCCLK
TMDS_R_DDCDATA_D
TMDS_R_DDCCLK_D
TMDS_HPD_EC
TMDS_HPD_IC
EC_SMB3_CLK
EC_SMB3_DATA
CEC_XOUT
CEC_XIN
CEC_IN
CEC_OUT
HDMI_NBC_TXCP
HDMI_NBC_TXCN
HDMI_NBC_TX0P
HDMI_NBC_TX0N
HDMI_NBC_TX1P
HDMI_NBC_TX1N
HDMI_NBC_TX2P
HDMI_NBC_TX2N
HDMI_C_TXCN
HDMI_C_TXCP
HDMI_C_TX0N
HDMI_C_TX0P
HDMI_C_TX1N
HDMI_C_TX1P
HDMI_C_TX2N
HDMI_C_TX2P
TMDS_HPD_IC#
TMDS_SCLK
TMDS_SDATA
+V3LA
+V3S
+DVI_V3S
+DVI_V3S
INVENTEC
TITLE
Perugia10M
HDMI & CEC
SIZE A3
CODE CS
DOC. NUMBER 1310A2250501
REV x01
SHEET 48 OF 63
CHANGE by Loren
10-Oct-2008

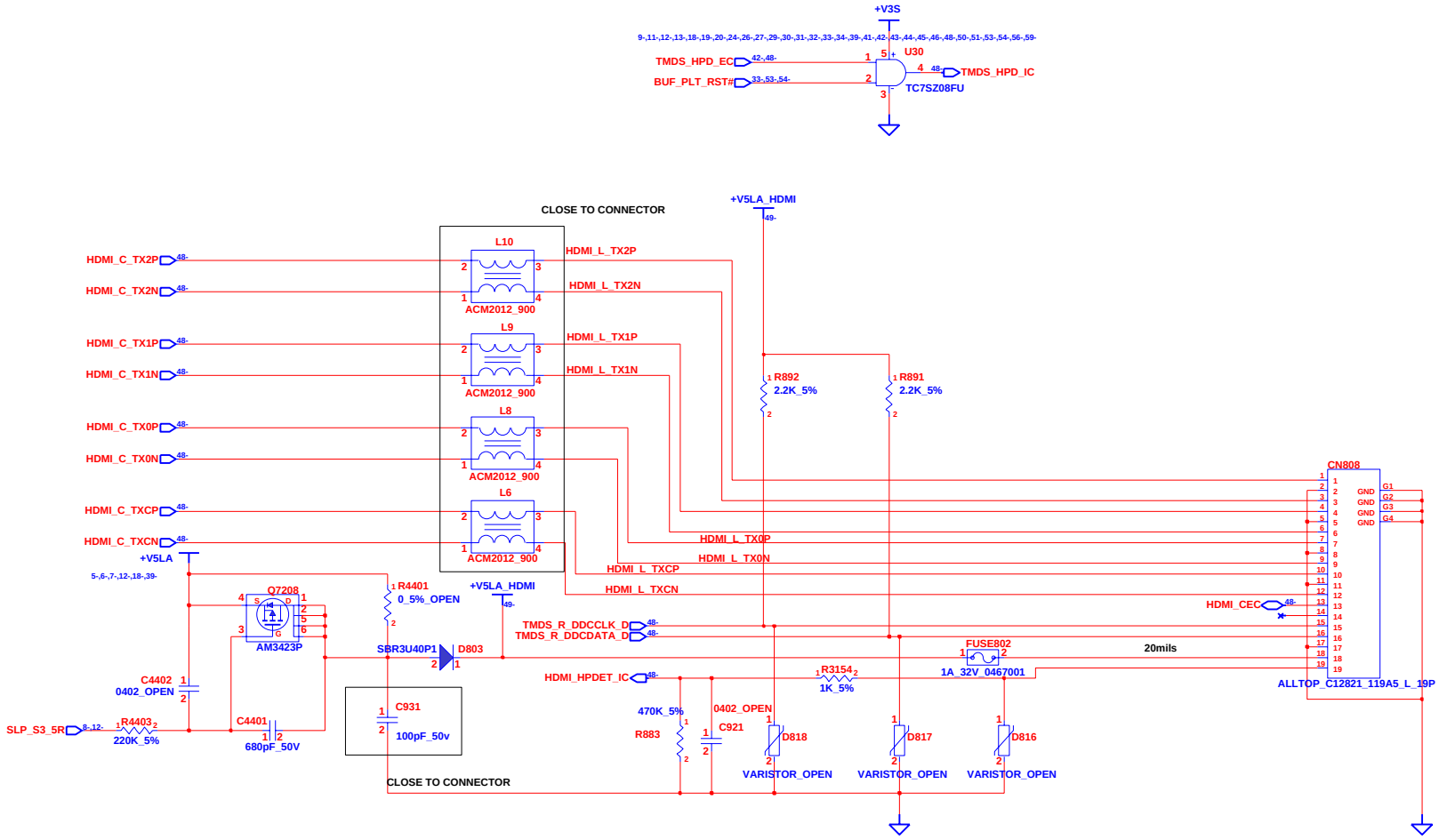

INVENTEC

TITLE
Perugia10M
HDMI CONN

SIZE	CODE	DOC. NUMBER	REV
A3	CS	1310A2250501	x01

CHANGE by Loren 10-Oct-2008

SHEET 49 OF 63

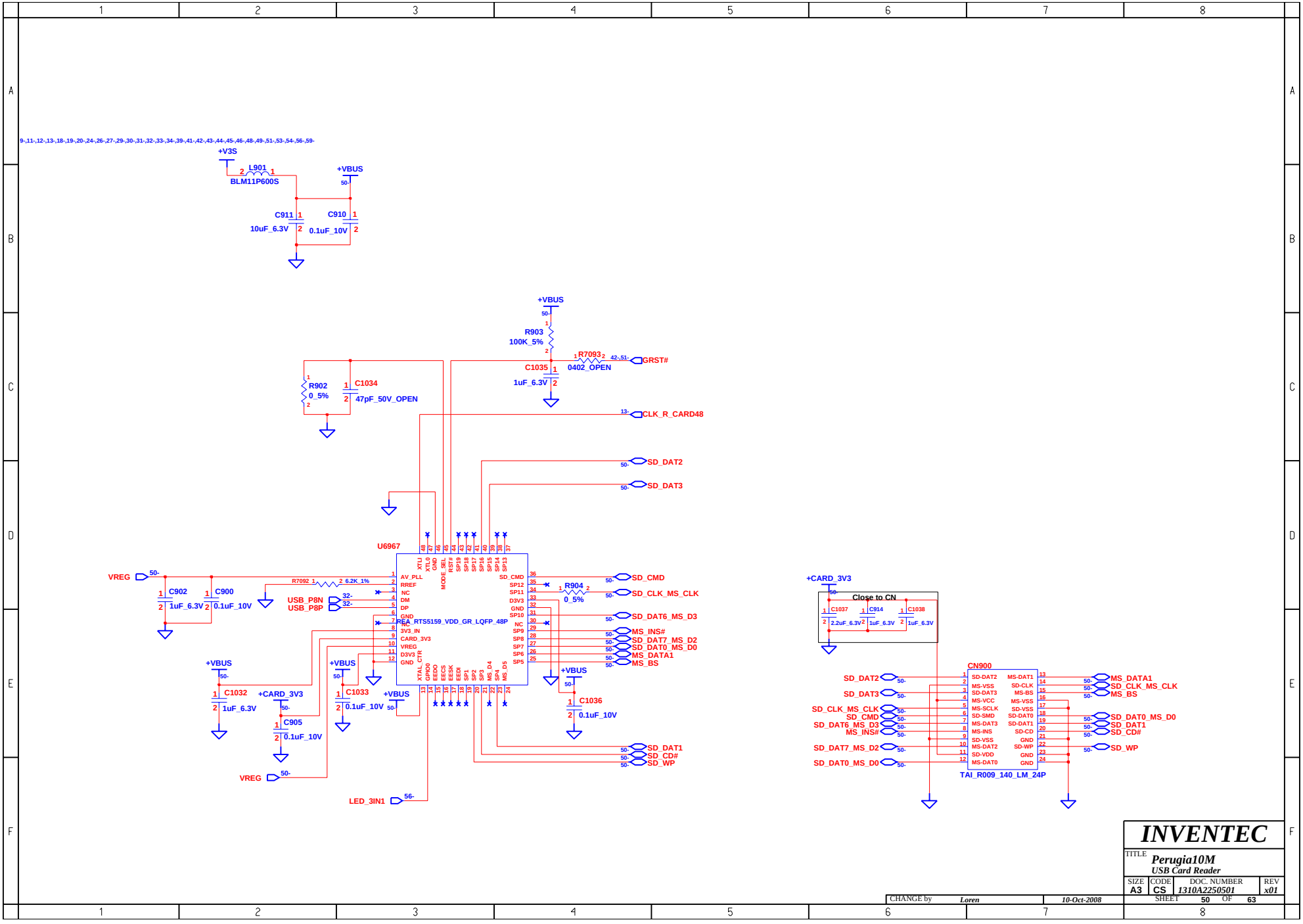

INVENTEC

TITLE
Perugia10M
USB Card Reader

SIZE	CODE	DOC. NUMBER	REV
A3	CS	1310A2250501	x01

CHANGE by *Loren* *10-Oct-2008*

SHEET 50 OF 63

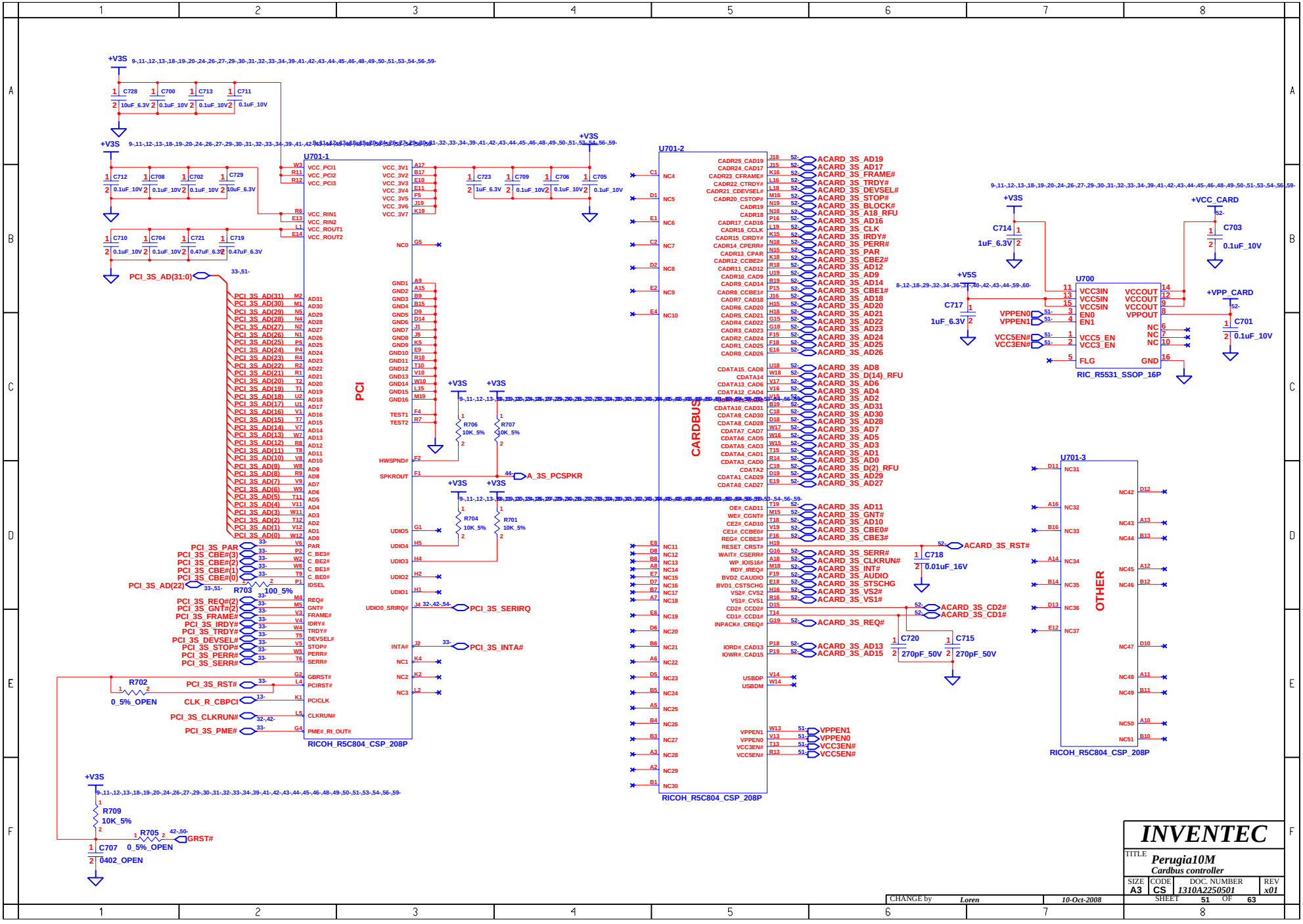
U701-1
PCI
RICOH_R5C804_CSP_208P
U701-2
CARDBUS
RICOH_R5C804_CSP_208P
U701-3
OTHER
RICOH_R5C804_CSP_208P
U700
RIC_R5531_SSOP_16P
+V3S
+V5S
+VCC_CARD
+VPP_CARD
PCI_3S_AD(31:0)
PCI_3S_PAR
PCI_3S_CBE#(3)
PCI_3S_CBE#(2)
PCI_3S_CBE#(1)
PCI_3S_CBE#(0)
PCI_3S_AD(22)
PCI_3S_REQ#(2)
PCI_3S_GNT#(2)
PCI_3S_FRAME#
PCI_3S_IRDY#
PCI_3S_TRDY#
PCI_3S_DEVSEL#
PCI_3S_STOP#
PCI_3S_PERR#
PCI_3S_SERR#
PCI_3S_RST#
CLK_R_CBPCI
PCI_3S_CLKRUN#
PCI_3S_PME#
PCI_3S_SERIRQ
PCI_3S_INTA#
A_3S_PCSPKR
GRST#
R702
0_5%_OPEN
R703
100_5%
R709
10K_5%
R705
0_5%_OPEN
C707
0402_OPEN
R706
10K_5%
R707
10K_5%
R704
10K_5%
R701
10K_5%
ACARD_3S_RST#
ACARD_3S_CD2#
ACARD_3S_CD1#
ACARD_3S_REQ#
ACARD_3S_AD13
ACARD_3S_AD15
VPPEN1
VPPEN0
VCC3EN#
VCC5EN#
C718
0.01uF_16V
C720
270pF_50V
C715
270pF_50V
C714
1uF_6.3V
C717
1uF_6.3V
C703
0.1uF_10V
C701
0.1uF_10V
INVENTEC
TITLE
Perugia10M
Cardbus controller
SIZE A3
CODE CS
DOC. NUMBER 1310A2250501
REV x01
SHEET 51 OF 63
CHANGE by Loren
10-Oct-2008

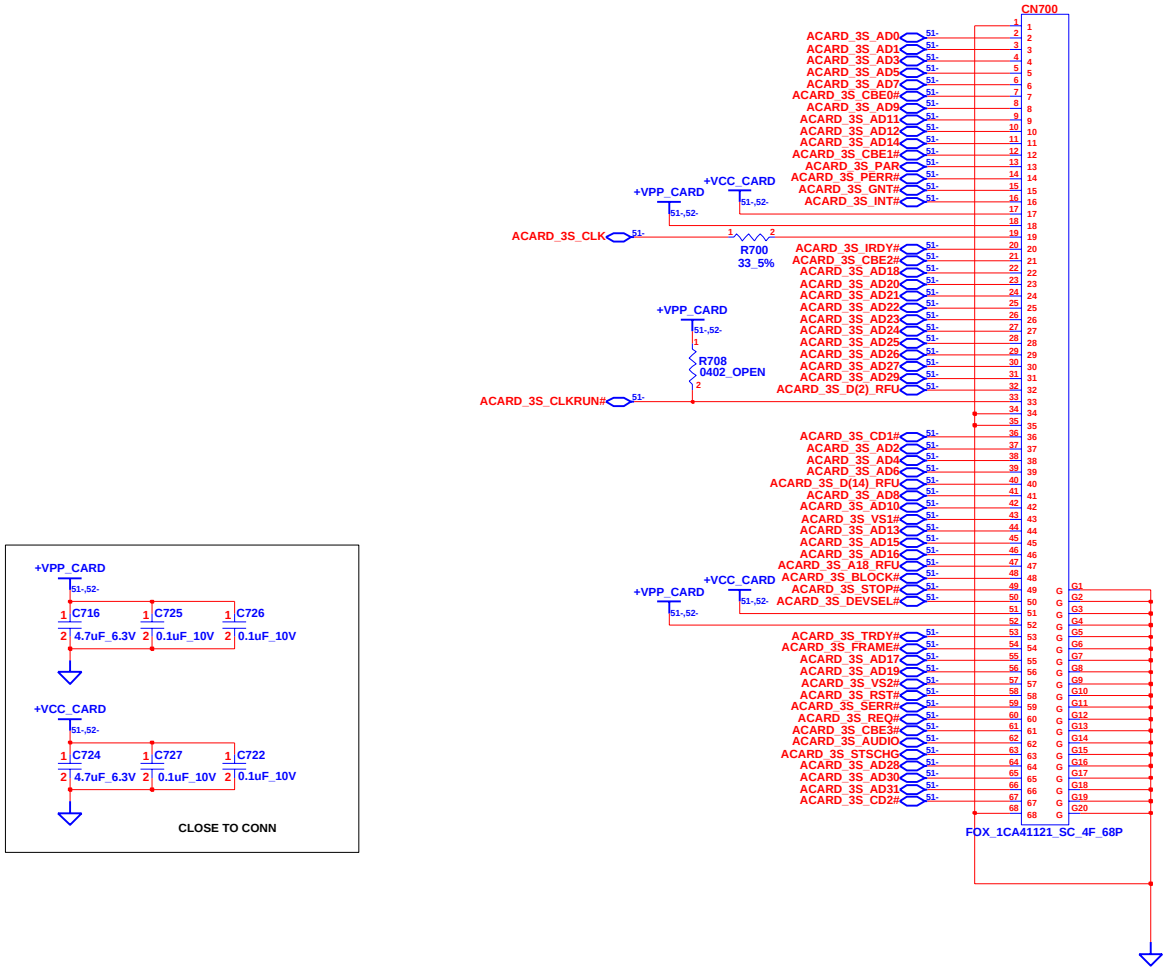

INVENTEC

TITLE **Perugia10M**
Cardbus controller

SIZE	CODE	DOC. NUMBER	REV
A3	CS	1310A2250501	x01

CHANGE by Loren 10-Oct-2008

SHEET 52 OF 63

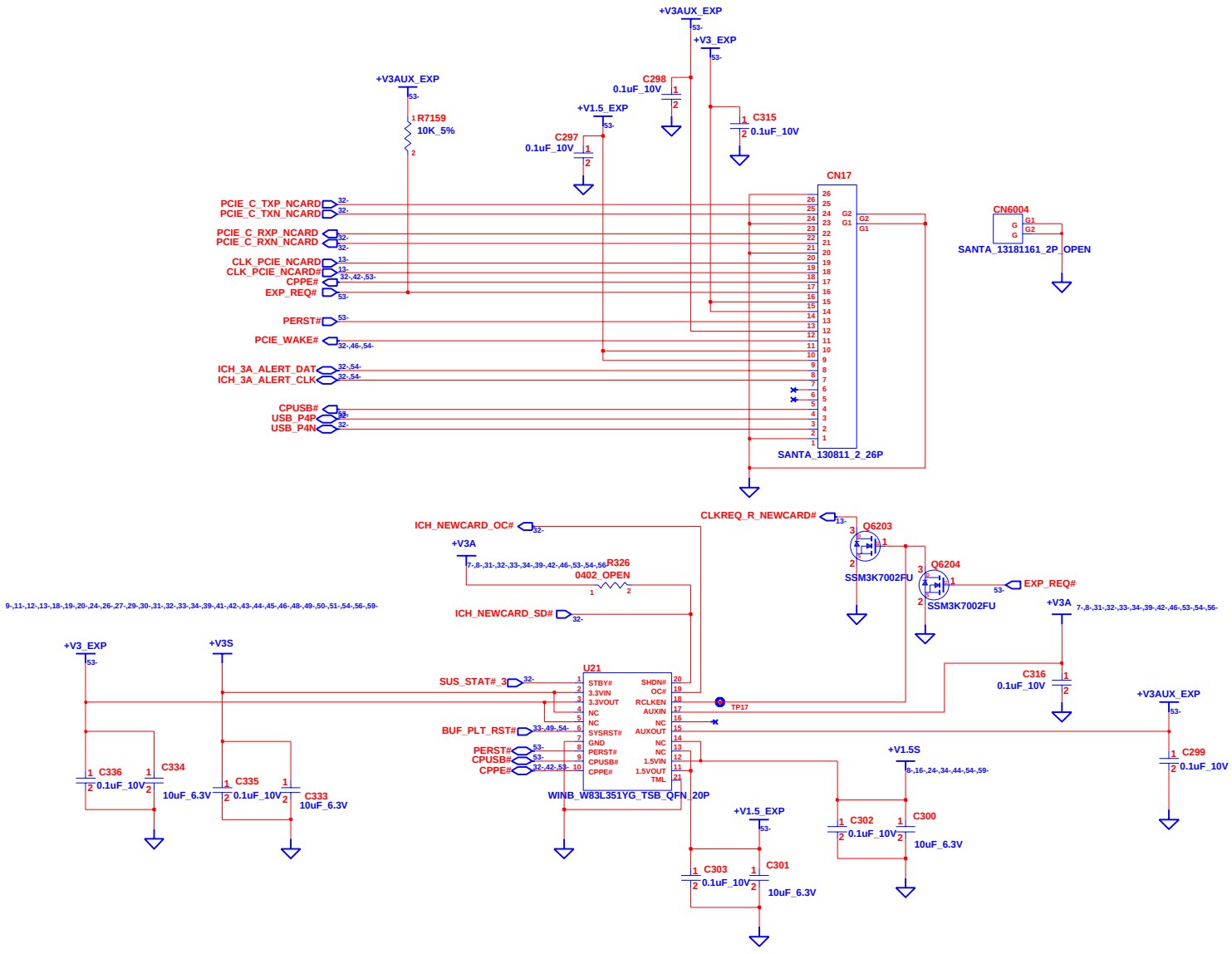

INVENTEC

TITLE **Perugia10M**
Express Card CONN

SIZE	CODE	DOC. NUMBER	REV
A3	CS	1310A2250501	x01

SHEET 53 OF 63

CHANGE by *Loren* *10-Oct-2008*

Wireless & Debug card

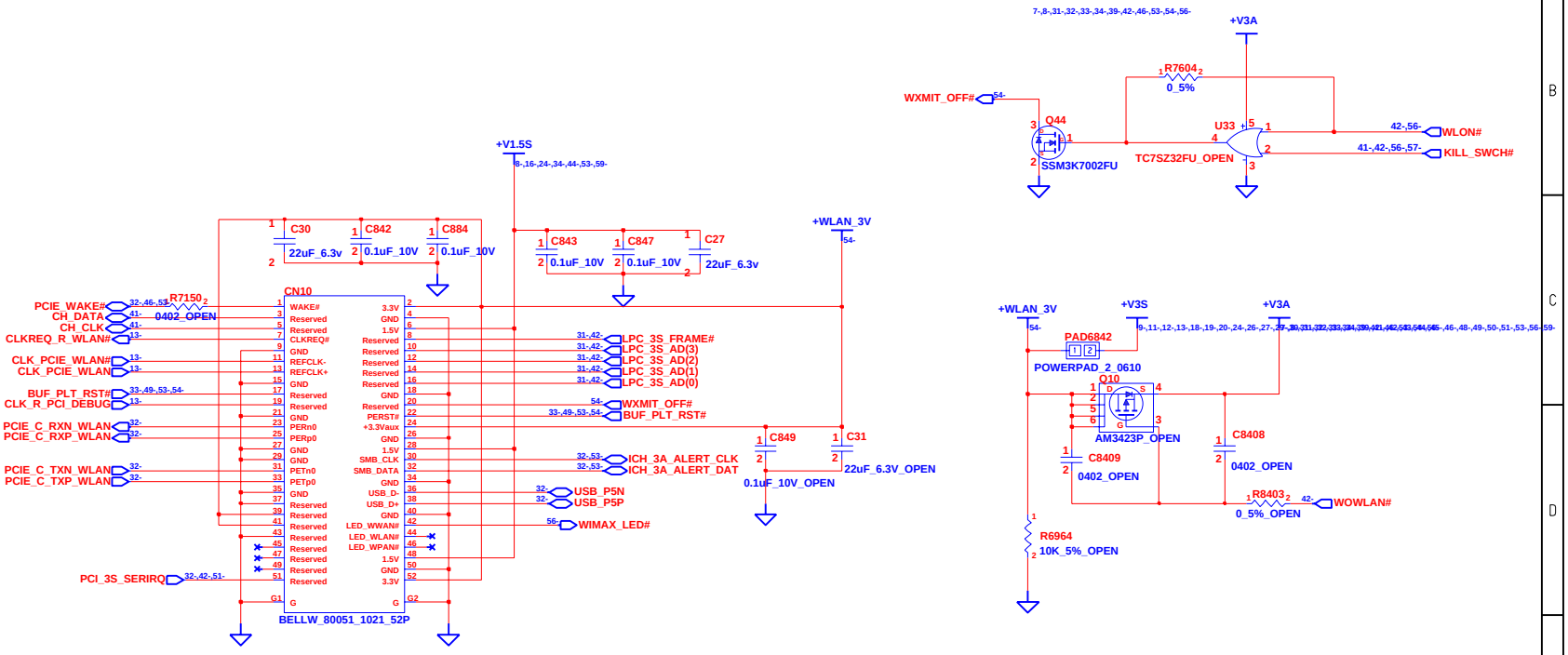

INVENTEC			
TITLE	Perugia10M Wireless & debug card		
SIZE A3	CODE CS	DOC. NUMBER 1310A2250501	REV x01
CHANGE by Loren	10-Oct-2008	SHEET 54 OF 63	

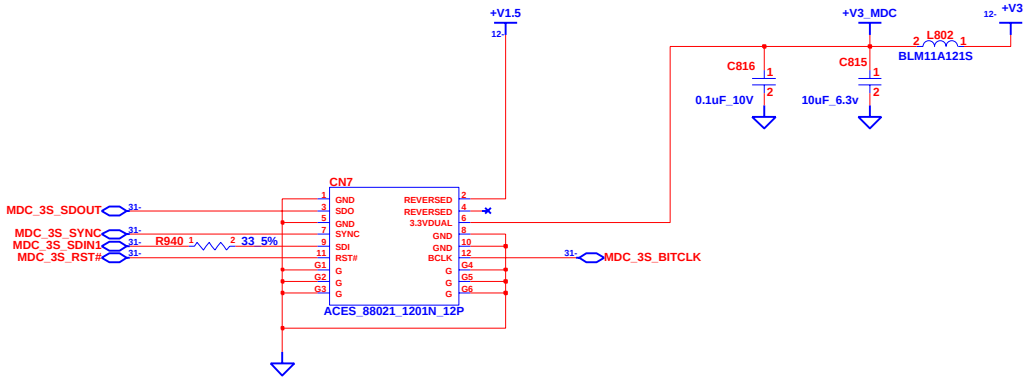

INVENTEC

TITLE **Perugia10M**
MDC CONN

SIZE	CODE	DOC. NUMBER	REV
A3	CS	1310A2250501	x01

CHANGE by Loren 10-Oct-2008

SHEET 55 OF 63

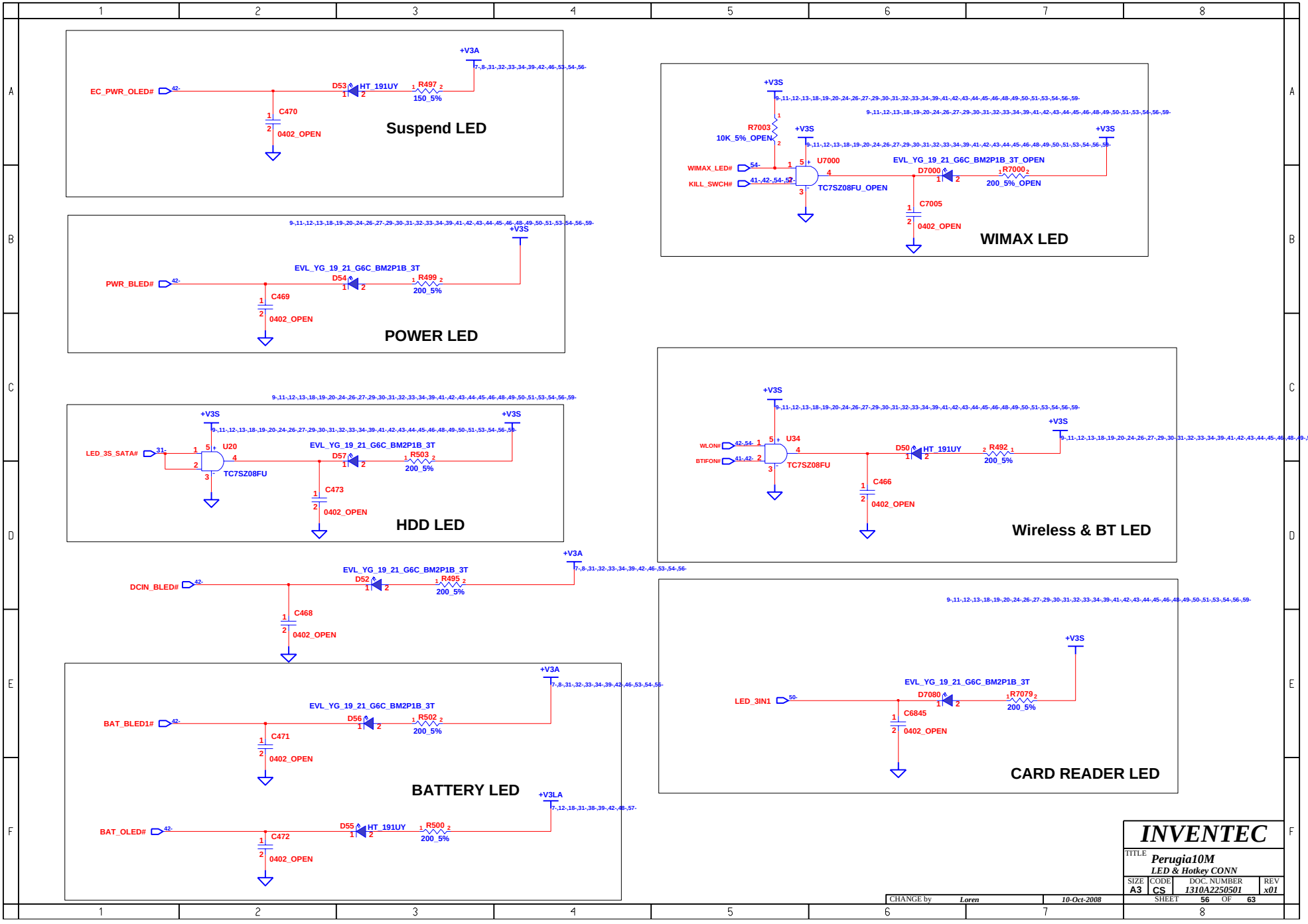
Suspend LED
EC_PWR_OLED#
D53
HT_191UY
R497
150_5%
C470
0402_OPEN
+V3A
WIMAX LED
WIMAX_LED#
KILL_SWCH#
R7003
10K_5%_OPEN
U7000
TC7SZ08FU_OPEN
EVL_YG_19_21_G6C_BM2P1B_3T_OPEN
D7000
R7000
200_5%_OPEN
C7005
0402_OPEN
+V3S
POWER LED
PWR_BLED#
EVL_YG_19_21_G6C_BM2P1B_3T
D54
R499
200_5%
C469
0402_OPEN
HDD LED
LED_3S_SATA#
U20
TC7SZ08FU
D57
R503
200_5%
C473
0402_OPEN
Wireless & BT LED
WLON#
BTIFON#
U34
TC7SZ08FU
D50
HT_191UY
R492
200_5%
C466
0402_OPEN
DCIN_BLED#
D52
R495
200_5%
C468
0402_OPEN
BATTERY LED
BAT_BLED1#
D56
R502
200_5%
C471
0402_OPEN
+V3LA
BAT_OLED#
D55
HT_191UY
R500
200_5%
C472
0402_OPEN
CARD READER LED
LED_3IN1
D7080
R7079
200_5%
C6845
0402_OPEN
INVENTEC
TITLE
Perugia10M
LED & Hotkey CONN
SIZE A3
CODE CS
DOC. NUMBER 1310A2250501
REV x01
SHEET 56 OF 63
CHANGE by Loren
10-Oct-2008

KILL SWITCH

WLAN ON: KILL_SWCH# -> Low
WLAN OFF: KILL_SWCH# -> High

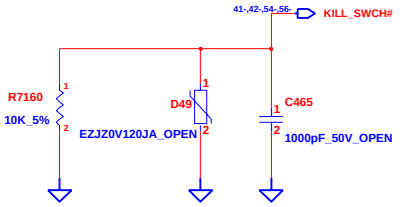

HALL SENSOR

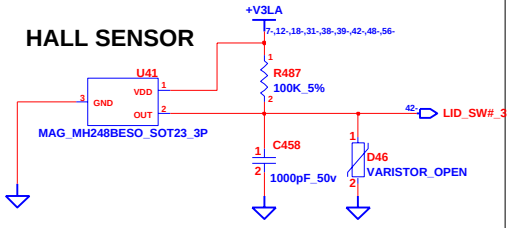

CHANGE by	*Loren*	*10-Oct-2008*	

INVENTEC

TITLE ***Perugia10M***
Kill Swich & Hall Sensor

SIZE	CODE	DOC. NUMBER	REV
A3	CS	*1310A2250501*	*x01*

SHEET **57** OF **63**

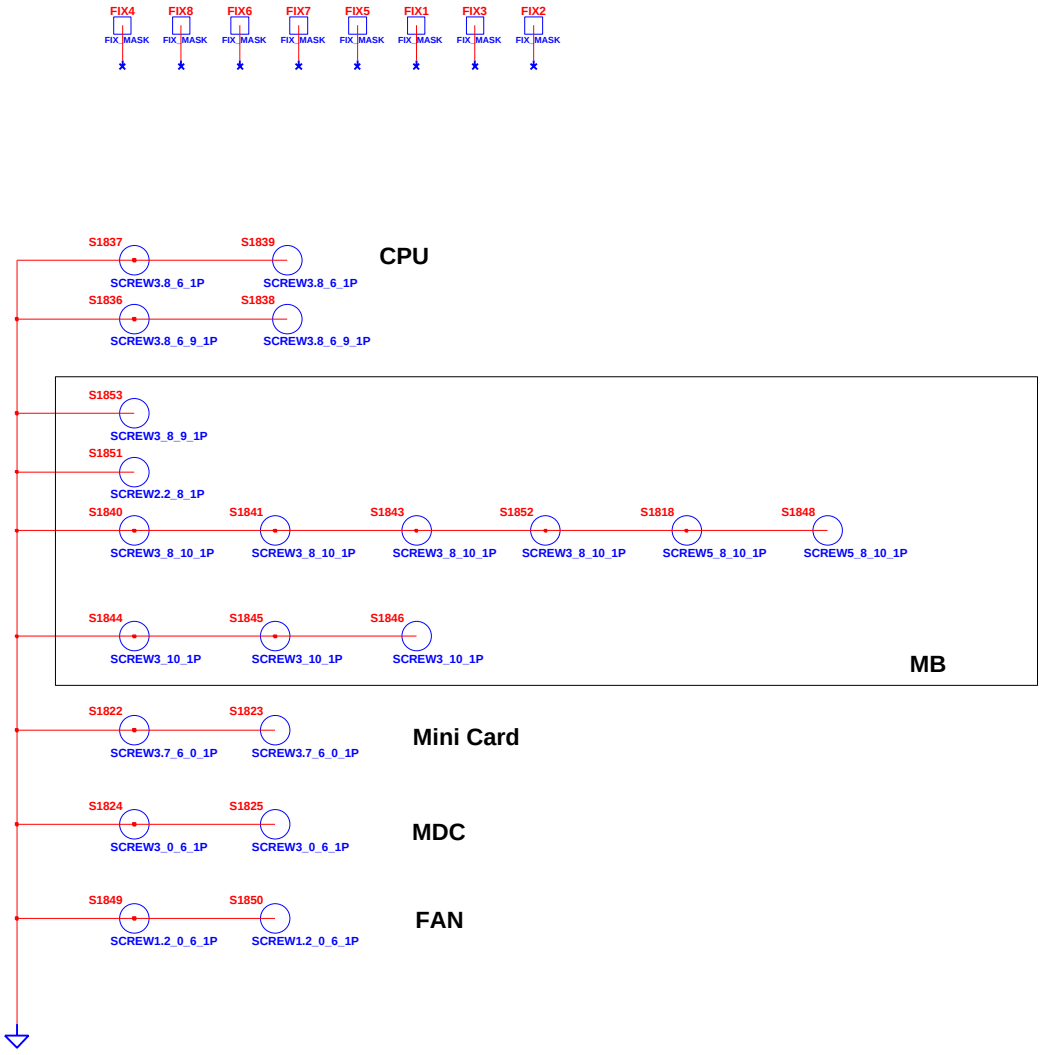

CHANGE by	Loren	10-Oct-2008	

INVENTEC

TITLE *Perugia10M*
Screw

SIZE	CODE	DOC. NUMBER	REV
A3	CS	1310A2250501	x01

SHEET 58 OF 63

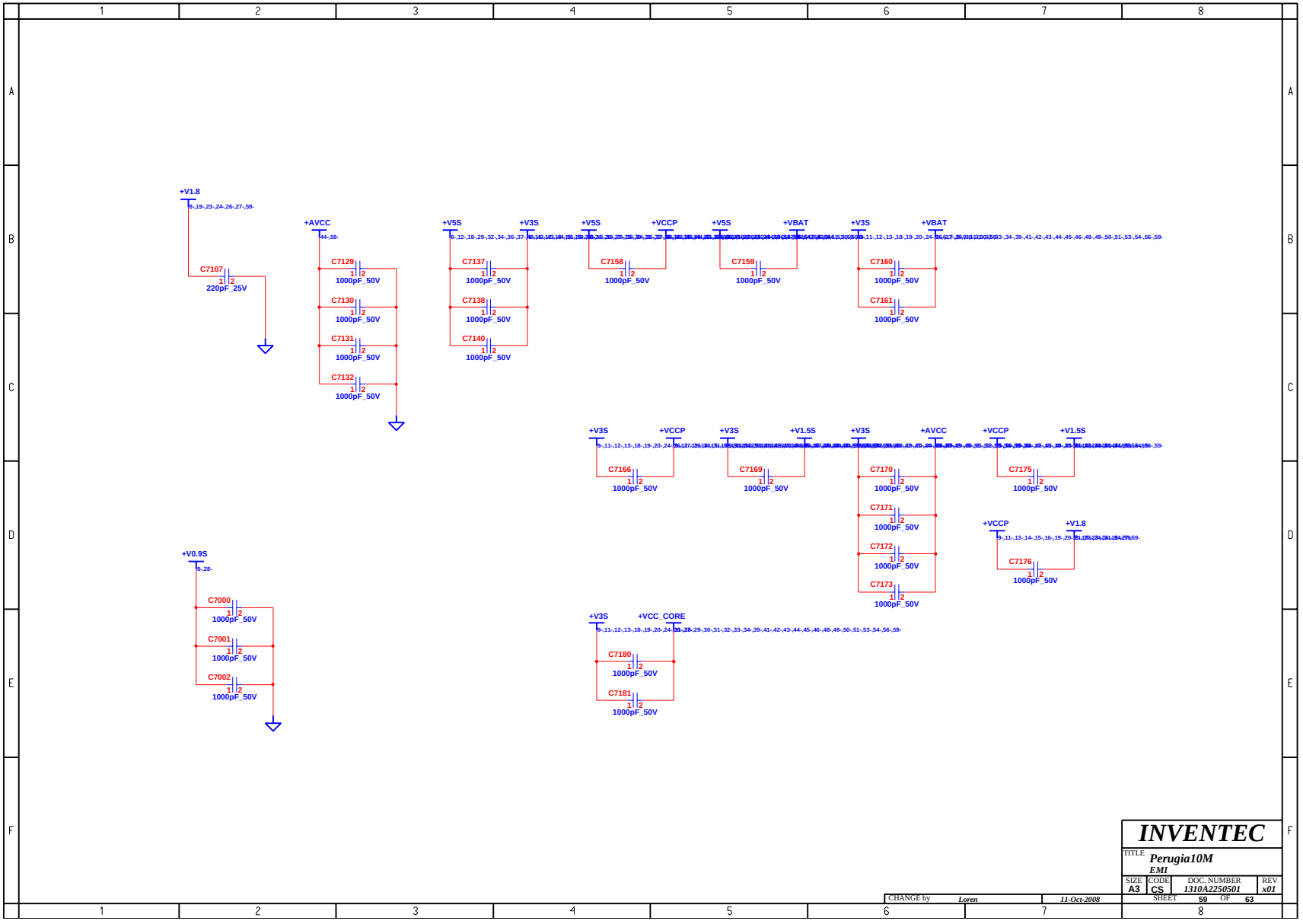

INVENTEC

TITLE *Perugia10M*
EMI

SIZE	CODE	DOC. NUMBER	REV
A3	CS	1310A2250501	x01

SHEET 59 OF 63

CHANGE by *Loren* *11-Oct-2008*

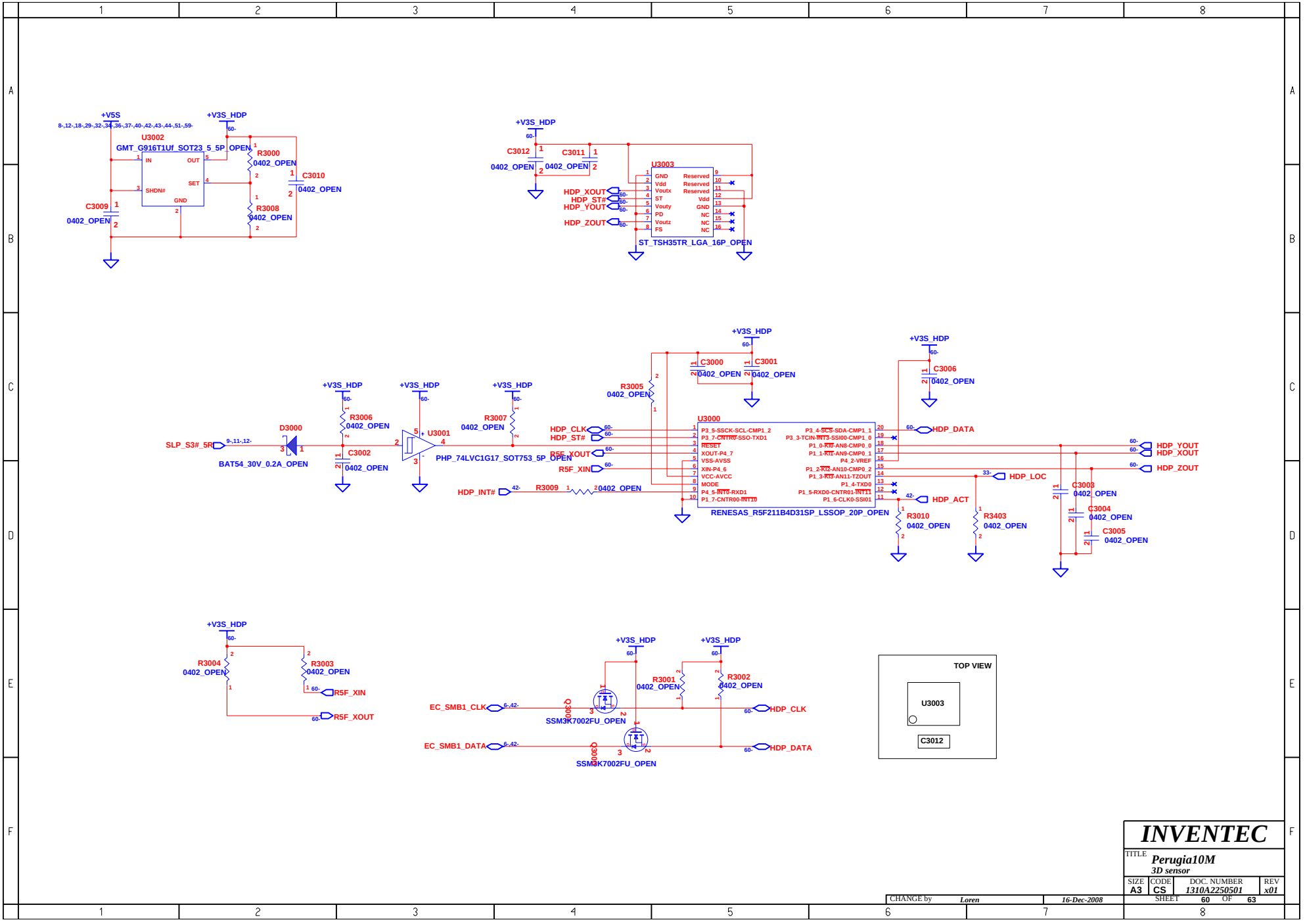

CHANGE by	Loren	16-Dec-2008	

INVENTEC

TITLE **Perugia10M**
3D sensor

SIZE	CODE	DOC. NUMBER	REV
A3	CS	1310A2250501	x01

SHEET 60 OF 63

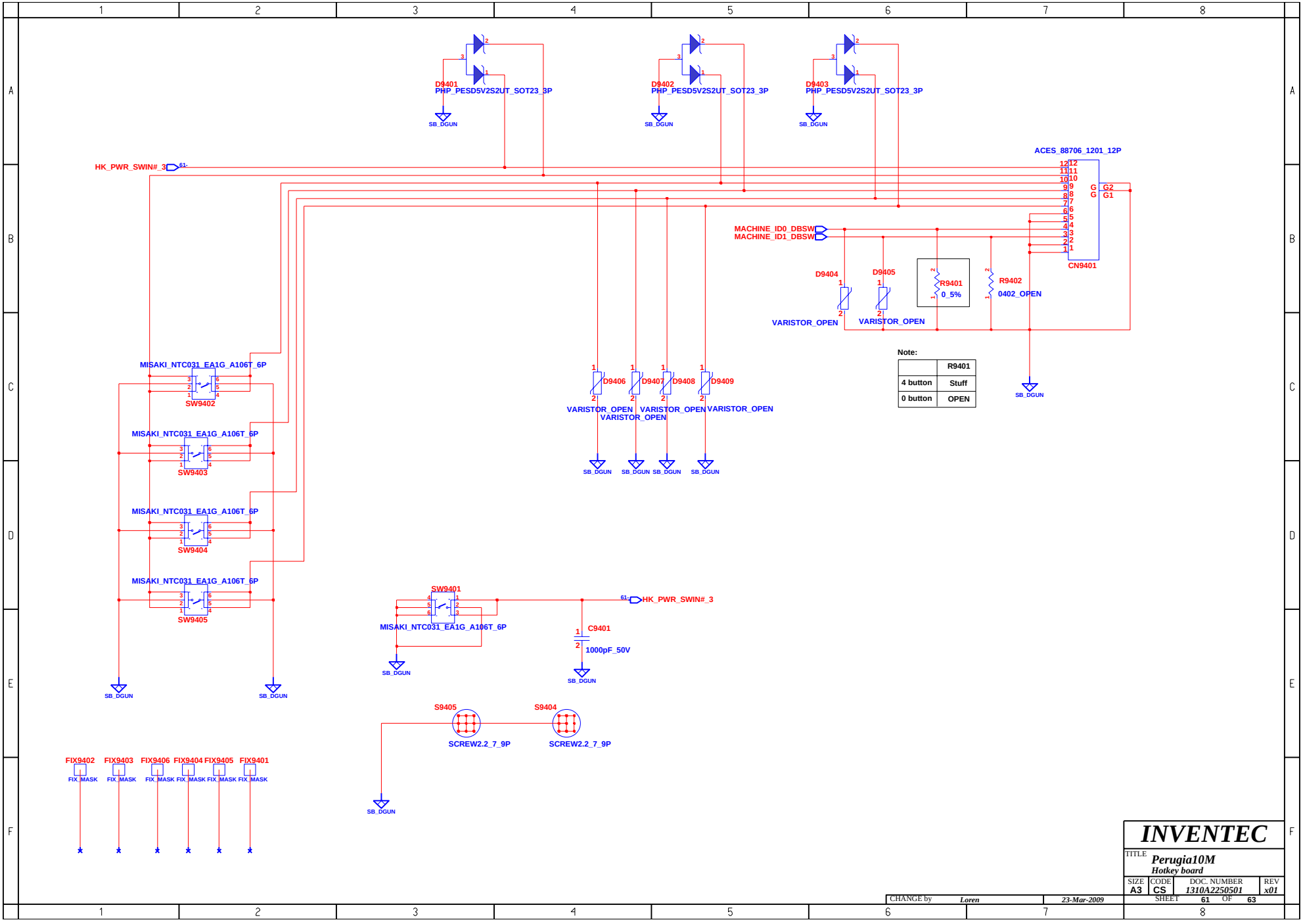
D9401
PHP_PESD5V2S2UT_SOT23_3P
D9402
PHP_PESD5V2S2UT_SOT23_3P
D9403
PHP_PESD5V2S2UT_SOT23_3P
SB_DGUN
HK_PWR_SWIN#_3
ACES_88706_1201_12P
CN9401
MACHINE_ID0_DBSW
MACHINE_ID1_DBSW
D9404
D9405
VARISTOR_OPEN
R9401
0_5%
R9402
0402_OPEN
Note:
R9401
4 button
Stuff
0 button
OPEN
D9406
D9407
D9408
D9409
MISAKI_NTC031_EA1G_A106T_6P
SW9402
SW9403
SW9404
SW9405
SW9401
C9401
1000pF_50V
S9405
S9404
SCREW2.2_7_9P
FIX9402
FIX9403
FIX9406
FIX9404
FIX9405
FIX9401
FIX_MASK
INVENTEC
TITLE
Perugia10M
Hotkey board
SIZE
A3
CODE
CS
DOC. NUMBER
1310A2250501
REV
x01
SHEET
61
OF
63
CHANGE by
Loren
23-Mar-2009

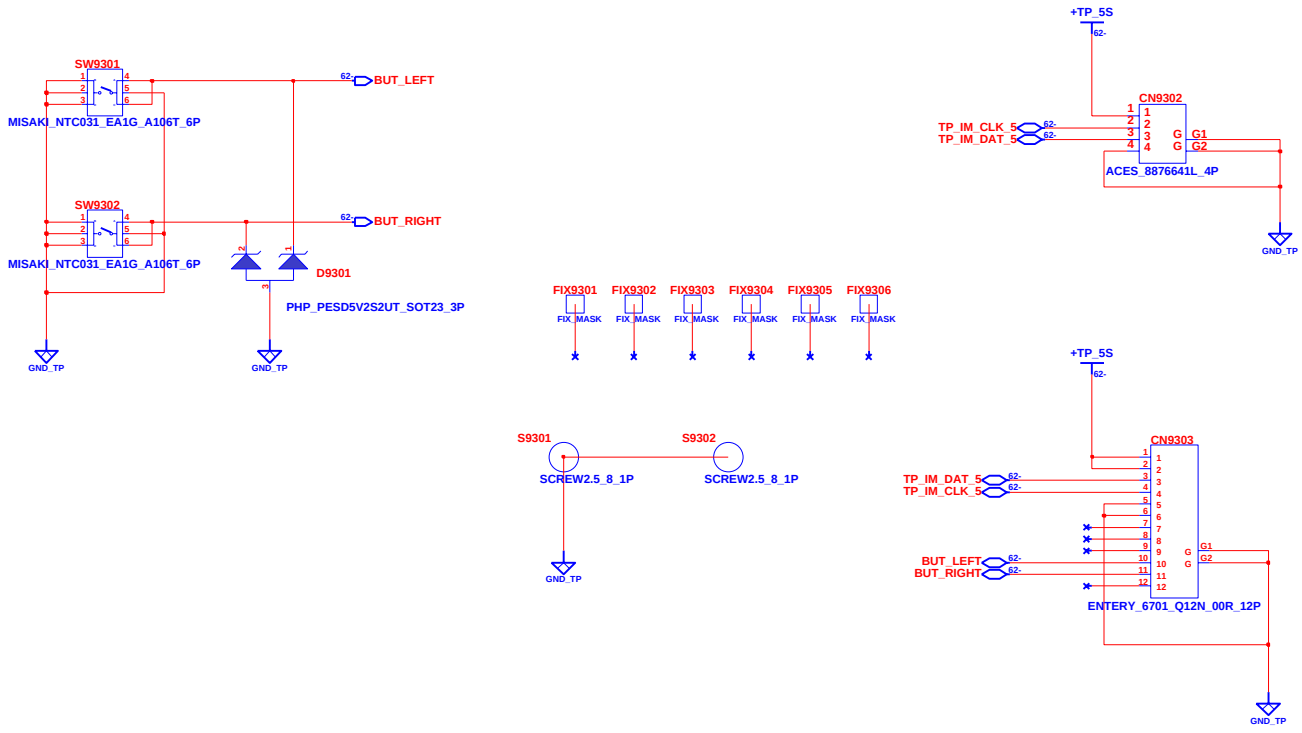

INVENTEC

TITLE **Perugia10M**
touch pad board

SIZE	CODE	DOC. NUMBER	REV
A3	CS	1310A2250501	x01

SHEET 62 OF 63

CHANGE by *Loren* *16-Dec-2008*

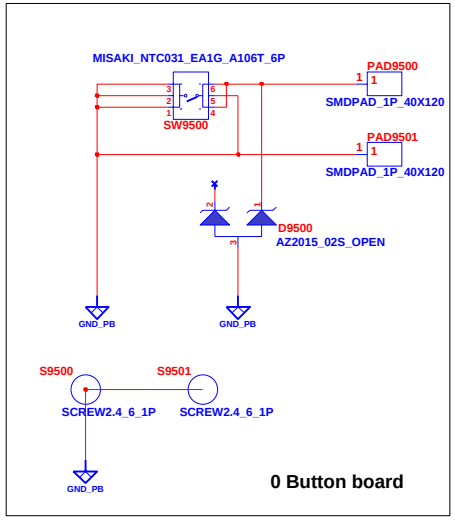

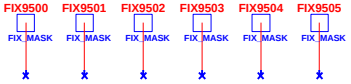

CHANGE by	Loren	22-Apr-2009	

INVENTEC

TITLE *Perugia10M*
power board

SIZE	CODE	DOC. NUMBER	REV
A3	CS	1310A2250501	x01

SHEET 63 OF 63