Compal confidential

Model Name : CY23 LA-1281 Rev1.0

Block Diagram

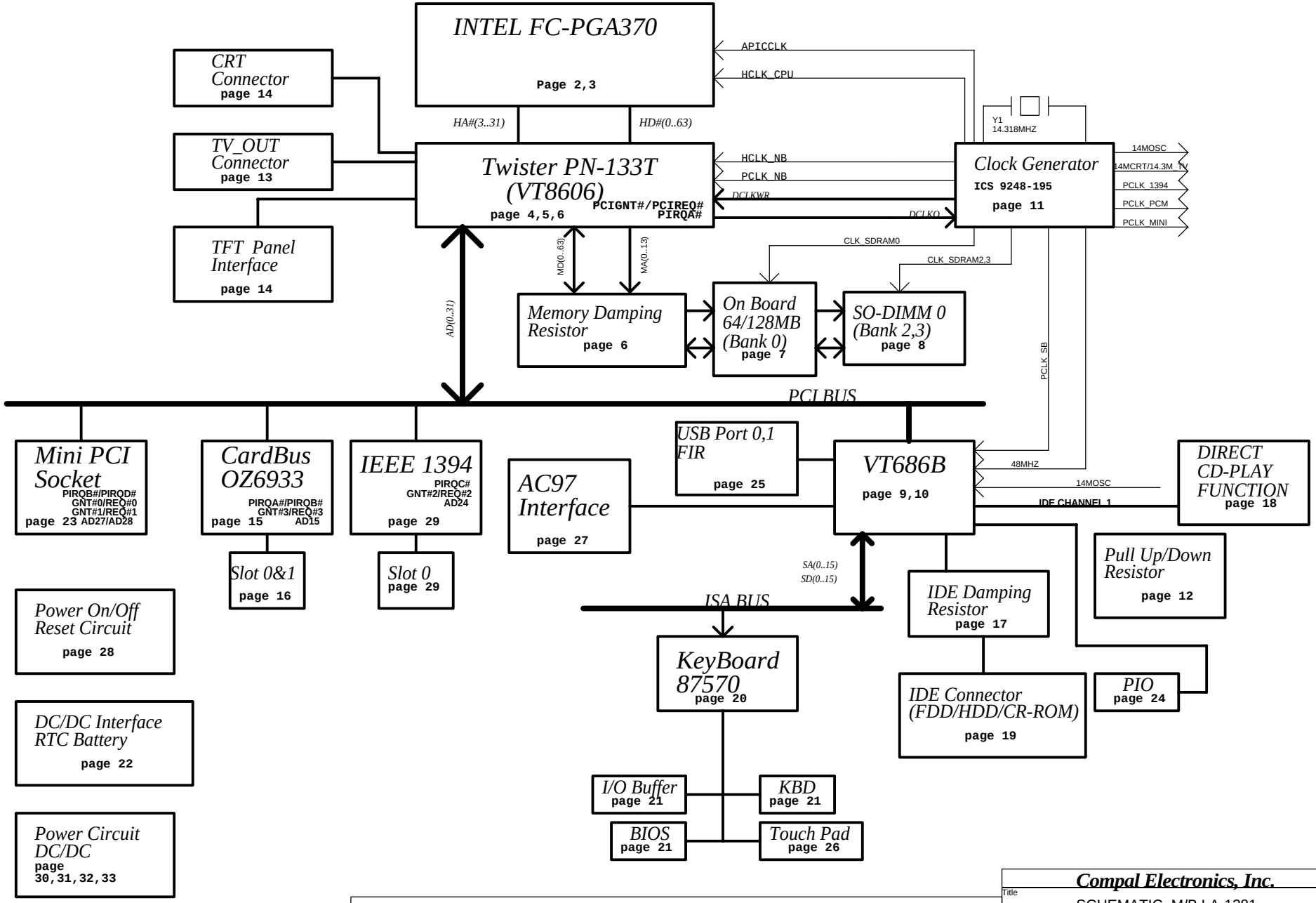

PROPRIETARY NOTE THIS SHEET OF ENGINEERING DRAWING IS THE PROPRIETARY PROPERTY OF COMPAL ELECTRONICS, INC. AND CONTAINS CONFIDENTIAL AND TRADE SECRET INFORMATION. THIS SHEET MAY NOT BE TRANSFERRED FROM THE CUSTODY OF THE COMPETENT DIVISION OF R&D DEPARTMENT EXCEPT AS AUTHORIZED BY COMPAL ELECTRONICS, INC. NEITHER THIS SHEET NOR THE INFORMATION IT CONTAINS MAY BE USED BY OR DISCLOSED TO ANY THIRD PARTY WITHOUT PRIOR WRITTEN CONSENT OF COMPAL ELECTRONICS, INC.

Compal Electronics, Inc.

Title	SCHEMATIC, M/B LA-1281	
Size B	Document Number 401202	Rev 1B
Date: 星期二, 十月 22, 2001	Sheet 1 of 34	

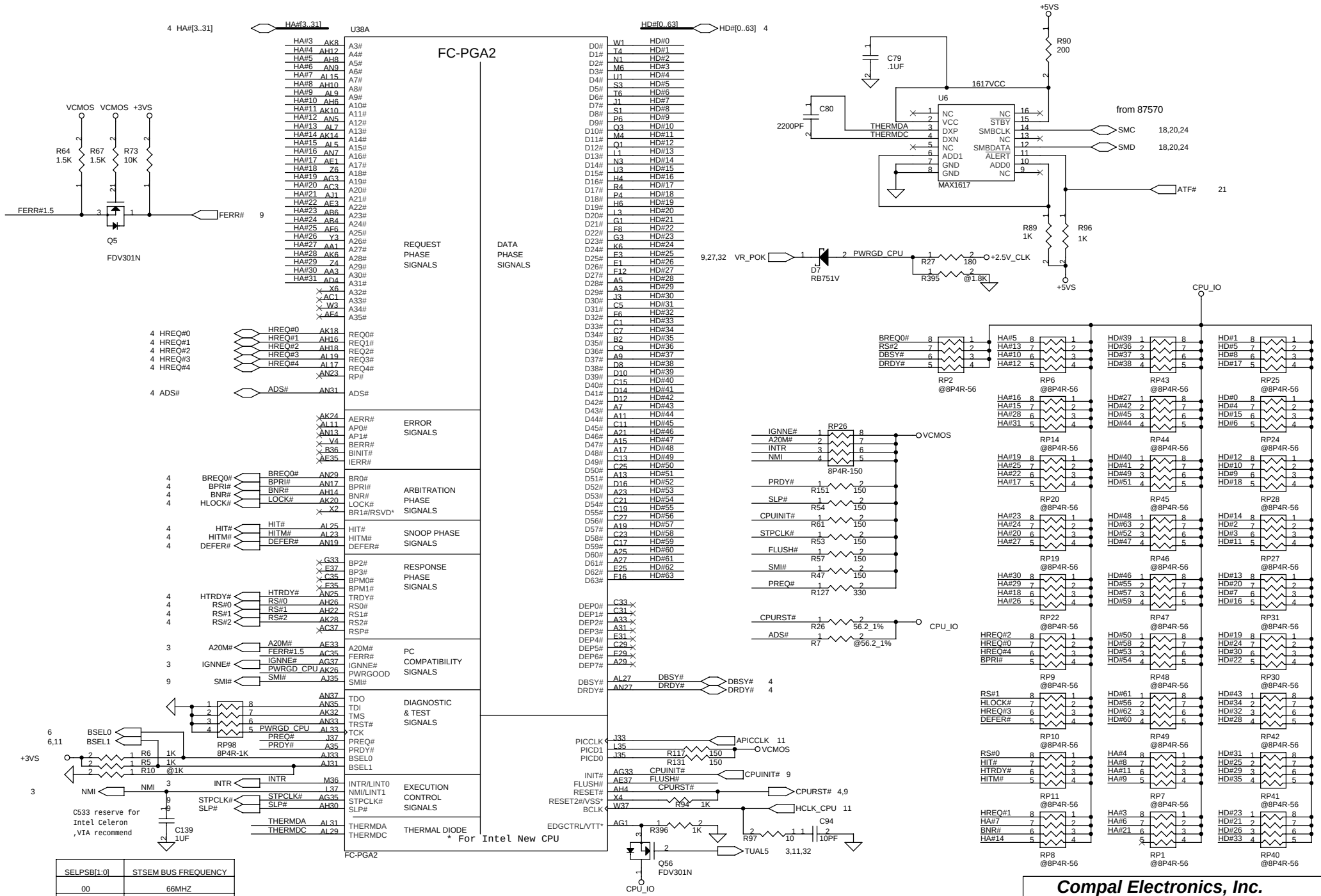

SELPSB[1:0]	STSEM BUS FREQUENCY
00	66MHZ
01	100MHZ
10	RESERVED
11	133MHZ

PROPRIETARY NOTE THIS SHEET OF ENGINEERING DRAWING IS THE PROPRIETARY PROPERTY OF COMPAL ELECTRONICS, INC. AND CONTAINS CONFIDENTIAL AND TRADE SECRET INFORMATION. THIS SHEET MAY NOT BE TRANSFERRED FROM THE CUSTODY OF THE COMPETENT DIVISION OF R&D DEPARTMENT EXCEPT AS AUTHORIZED BY COMPAL ELECTRONICS, INC. NEITHER THIS SHEET NOR THE INFORMATION IT CONTAINS MAY BE USED BY OR DISCLOSED TO ANY THIRD PARTY WITHOUT PRIOR WRITTEN CONSENT OF COMPAL ELECTRONICS, INC.

PROPRIETARY NOTE THIS SHEET OF ENGINEERING DRAWING IS THE PROPRIETARY PROPERTY OF COMPAL ELECTRONICS, INC. AND CONTAINS CONFIDENTIAL AND TRADE SECRET INFORMATION. THIS SHEET MAY NOT BE TRANSFERRED FROM THE CUSTODY OF THE COMPETENT DIVISION OF R&D DEPARTMENT EXCEPT AS AUTHORIZED BY COMPAL ELECTRONICS, INC. NEITHER THIS SHEET NOR THE INFORMATION IT CONTAINS MAY BE USED BY OR DISCLOSED TO ANY THIRD PARTY WITHOUT PRIOR WRITTEN CONSENT OF COMPAL ELECTRONICS, INC.

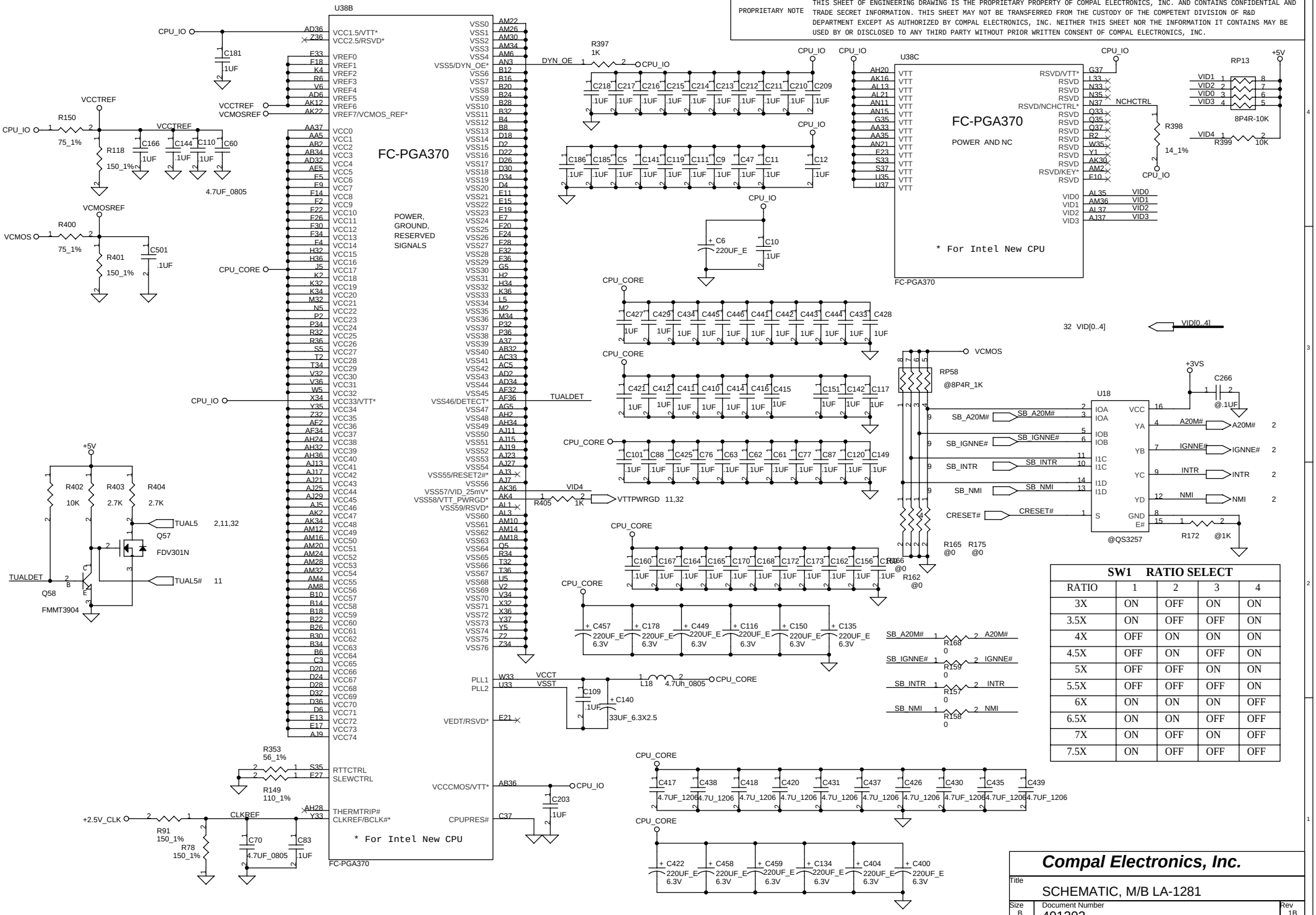

RATIO	1	2	3	4
3X	ON	OFF	ON	ON
3.5X	ON	OFF	OFF	ON
4X	OFF	ON	ON	ON
4.5X	OFF	ON	OFF	ON
5X	OFF	OFF	ON	ON
5.5X	OFF	OFF	OFF	ON
6X	ON	ON	ON	OFF
6.5X	ON	ON	OFF	OFF
7X	ON	OFF	ON	OFF
7.5X	ON	OFF	OFF	OFF

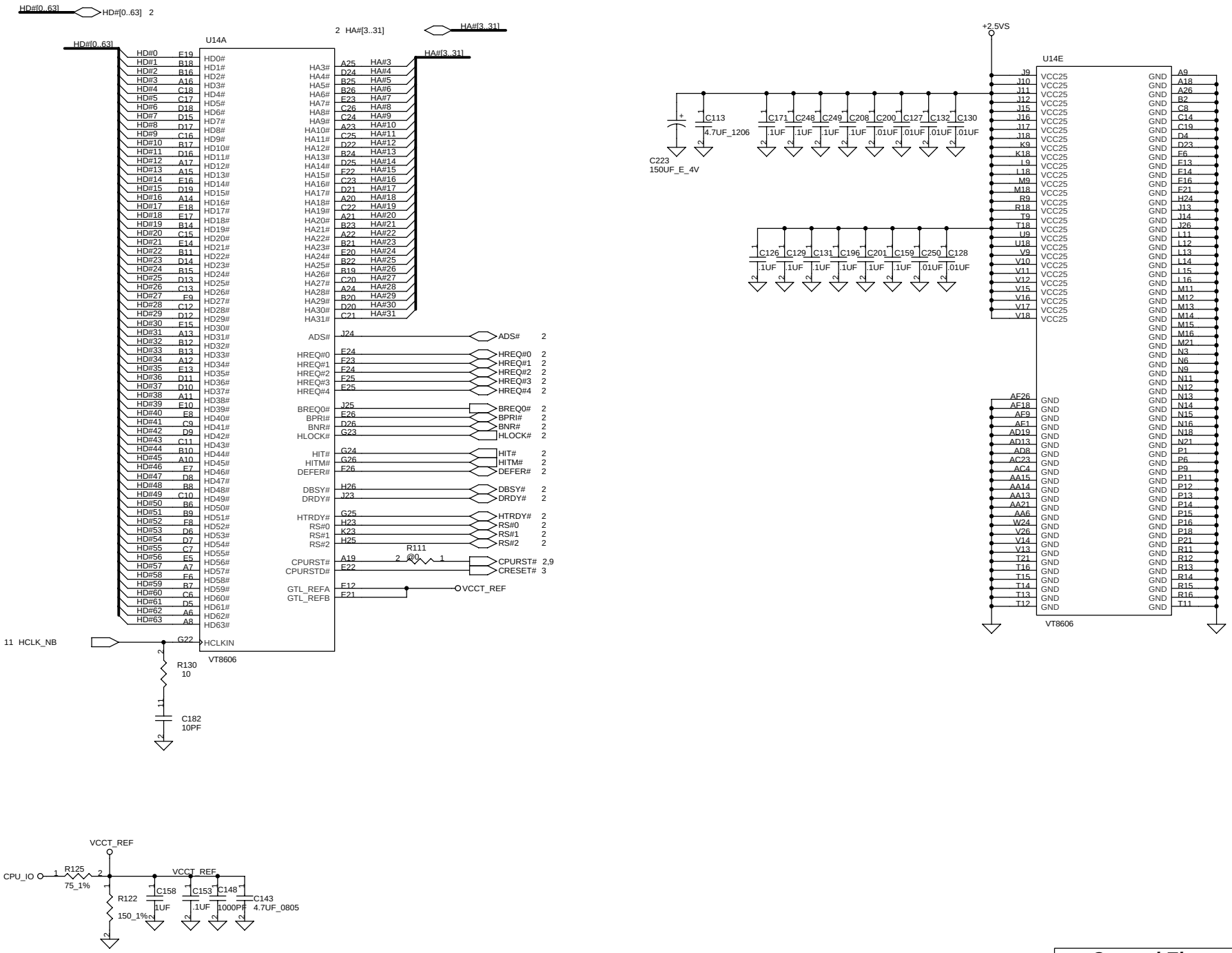

THIS SHEET OF ENGINEERING DRAWING IS THE PROPRIETARY PROPERTY OF COMPAL ELECTRONICS, INC. AND CONTAINS CONFIDENTIAL AND TRADE SECRET INFORMATION. THIS SHEET MAY NOT BE TRANSFERRED FROM THE CUSTODY OF THE COMPETENT DIVISION OF R&D DEPARTMENT EXCEPT AS AUTHORIZED BY COMPAL ELECTRONICS, INC. NEITHER THIS SHEET NOR THE INFORMATION CONTAINS MAY BE USED BY OR DISCLOSED TO ANY THIRD PARTY WITHOUT PRIOR WRITTEN CONSENT OF COMPAL ELECTRONICS, INC.

Compal Electronics, Inc.

Title	SCHEMATIC, M/B LA-1281	
Size B	Document Number 401202	Rev 1B
Date: 星期一, 十月 22, 2001	Sheet 4 of 34	

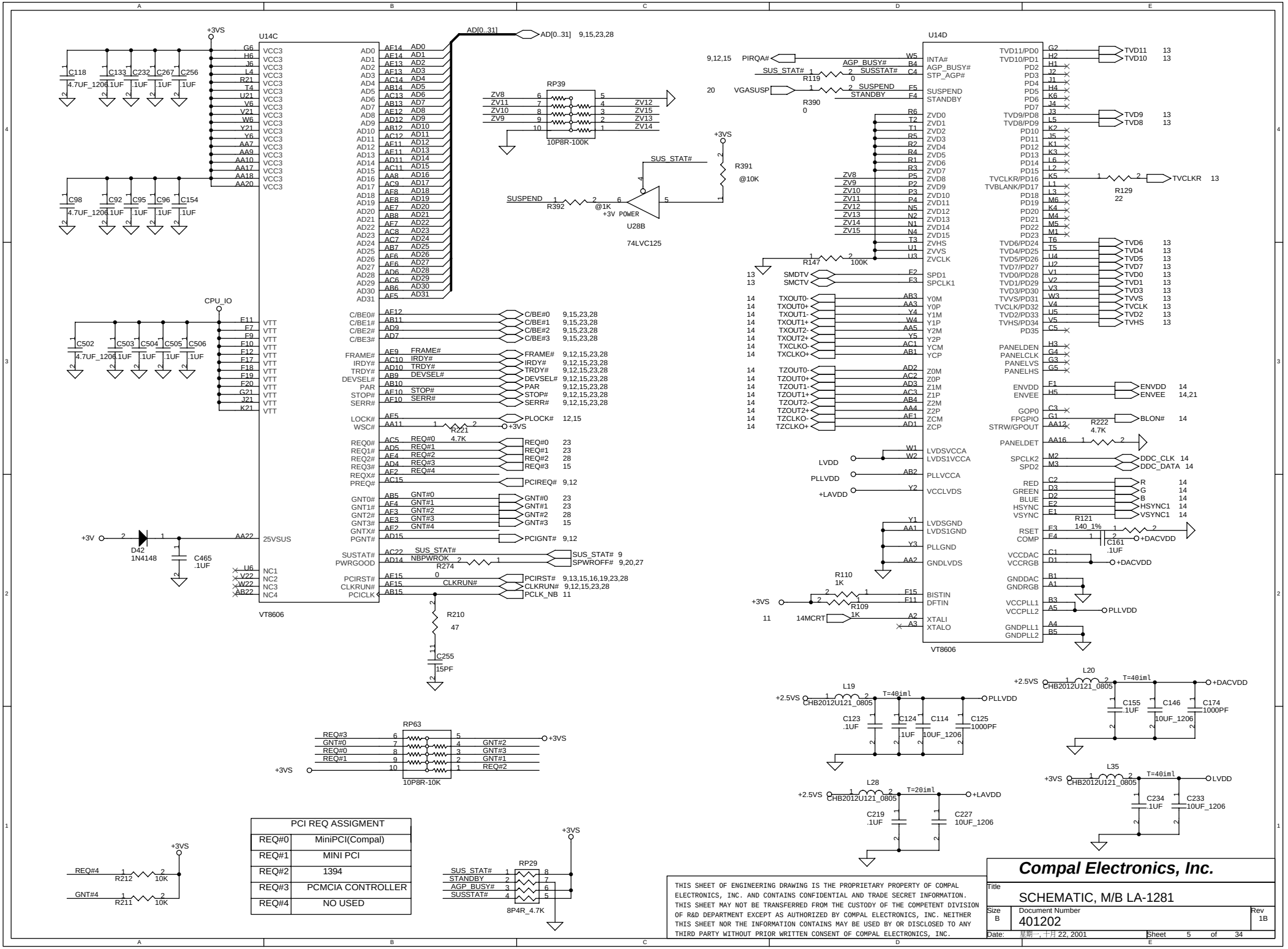
U14C
VT8606
U14D
VT8606
AD[0..31]
AD[0..31] 9,15,23,28
RP39
10P8R-100K
U28B
74LVC125
SUS_STAT#
SUSPEND
R392
@1K
+3V POWER
R391
@10K
CPU_IO
+3VS
+3V
D42
1N4148
C465
.1UF
R210
47
C255
15PF
RP63
10P8R-10K
REQ#4
GNT#4
R212
10K
R211
10K
RP29
8P4R_4.7K
PCI REQ ASSIGMENT
REQ#0 MiniPCI(Compal)
REQ#1 MINI PCI
REQ#2 1394
REQ#3 PCMCIA CONTROLLER
REQ#4 NO USED
L19
CHB2012U121_0805
T=40iml
PLLVDD
L20
+DACVDD
L28
T=20iml
+LAVDD
L35
LVDD
THIS SHEET OF ENGINEERING DRAWING IS THE PROPRIETARY PROPERTY OF COMPAL ELECTRONICS, INC. AND CONTAINS CONFIDENTIAL AND TRADE SECRET INFORMATION. THIS SHEET MAY NOT BE TRANSFERRED FROM THE CUSTODY OF THE COMPETENT DIVISION OF R&D DEPARTMENT EXCEPT AS AUTHORIZED BY COMPAL ELECTRONICS, INC. NEITHER THIS SHEET NOR THE INFORMATION CONTAINS MAY BE USED BY OR DISCLOSED TO ANY THIRD PARTY WITHOUT PRIOR WRITTEN CONSENT OF COMPAL ELECTRONICS, INC.
Compal Electronics, Inc.
Title
SCHEMATIC, M/B LA-1281
Size B
Document Number 401202
Rev 1B
Date: 星期一, 十月 22, 2001
Sheet 5 of 34

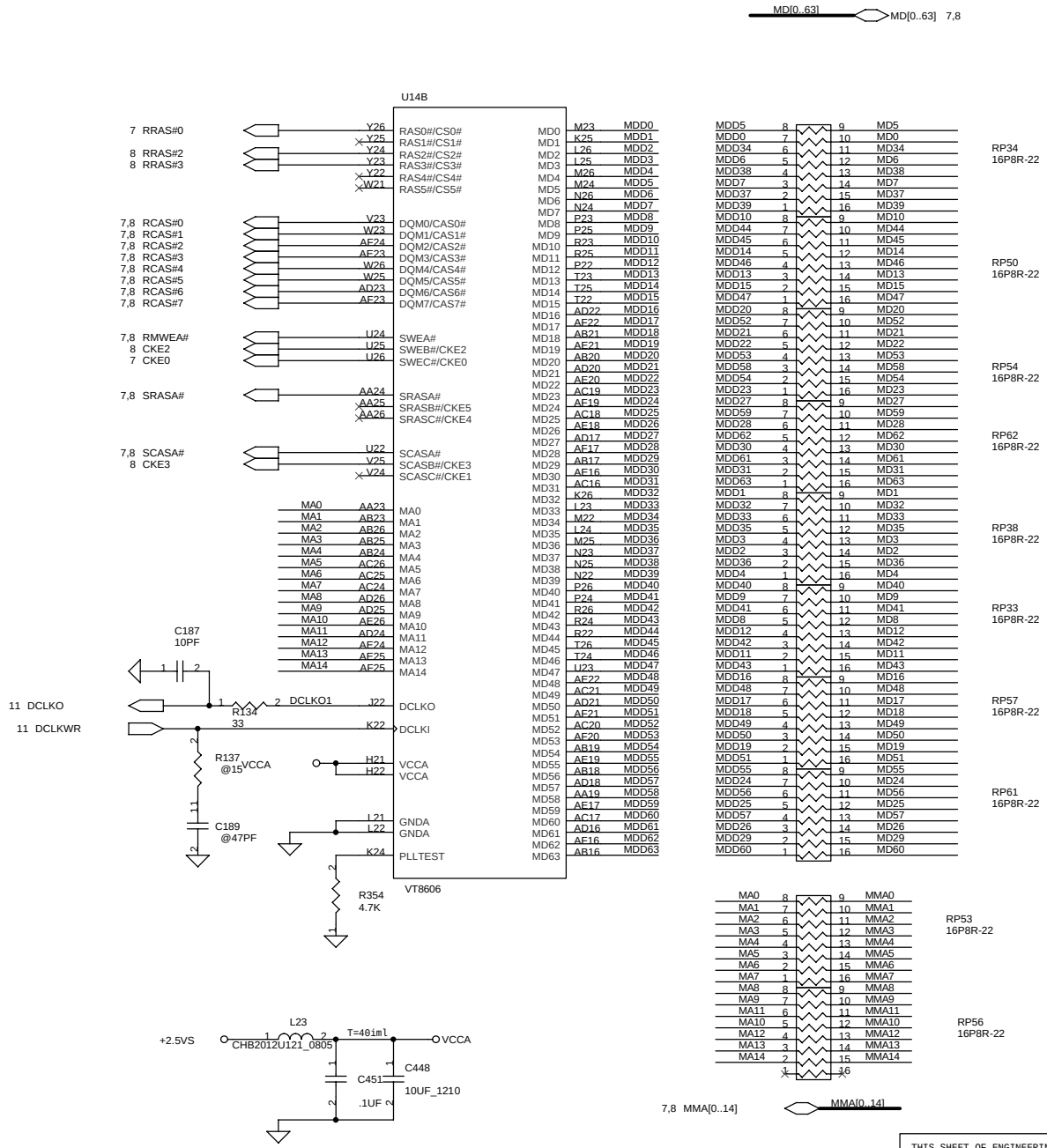

Strap	Description	Setting
MA12,8	CPU Clcok Frequency	01=100Mhz 11=133Mhz 00=66Mhz
MA2	PCI Base Address Mapping	0=Map0 1=Map1
MA3	Graphic IO Enable/Disable	0=Enable 1=Disable
MA4	PCI Interrupt	0=Enable 1=Disable
MA7	Graphic Test Mode	0=Normal 1=Test
MA9	VGA Clock Select	0=PLL 1= External
MA11	IOQ Level	0=4Level 1=1Level
MA0,1,13,14	Panel Type	

THIS SHEET OF ENGINEERING DRAWING IS THE PROPRIETARY PROPERTY OF COMPAL ELECTRONICS, INC. AND CONTAINS CONFIDENTIAL AND TRADE SECRET INFORMATION. THIS SHEET MAY NOT BE TRANSFERRED FROM THE CUSTODY OF THE COMPETENT DIVISION OF R&D DEPARTMENT EXCEPT AS AUTHORIZED BY COMPAL ELECTRONICS, INC. NEITHER THIS SHEET NOR THE INFORMATION CONTAINS MAY BE USED BY OR DISCLOSED TO ANY THIRD PARTY WITHOUT PRIOR WRITTEN CONSENT OF COMPAL ELECTRONICS, INC.

Compal Electronics, Inc.

Title: SCHEMATIC, M/B LA-1281

Size: Custom | Document Number: 401202 | Rev: 1B

Date: 星期一, 十月 22, 2001 | Sheet 6 of 34

BANK0

64/128MB SDRAM

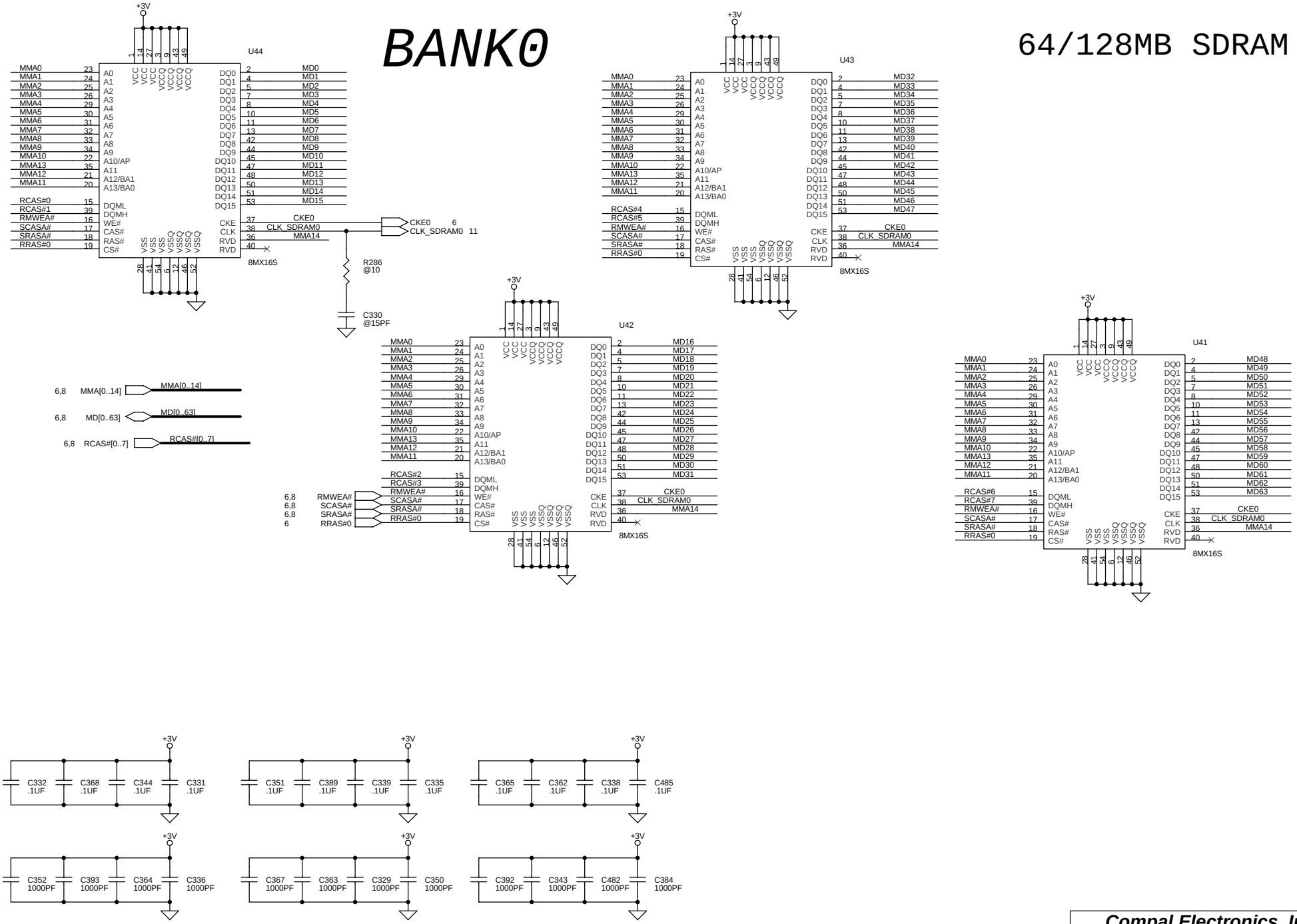

PROPRIETARY NOTE THIS SHEET OF ENGINEERING DRAWING IS THE PROPRIETARY PROPERTY OF COMPAL ELECTRONICS, INC. AND CONTAINS CONFIDENTIAL AND TRADE SECRET INFORMATION. THIS SHEET MAY NOT BE TRANSFERRED FROM THE CUSTODY OF THE COMPETENT DIVISION OF R&D DEPARTMENT EXCEPT AS AUTHORIZED BY COMPAL ELECTRONICS, INC. NEITHER THIS SHEET NOR THE INFORMATION IT CONTAINS MAY BE USED BY OR DISCLOSED TO ANY THIRD PARTY WITHOUT PRIOR WRITTEN CONSENT OF COMPAL ELECTRONICS, INC.

Compal Electronics, Inc.

Title	SCHEMATIC, M/B LA-1281
Size	B
Document Number	401202
Rev	1B
Date:	星期一, 十月 22, 2001
Sheet	7 of 34

SO-DIM 144 PINS
RAM MODULE CONN.

BANK2/3

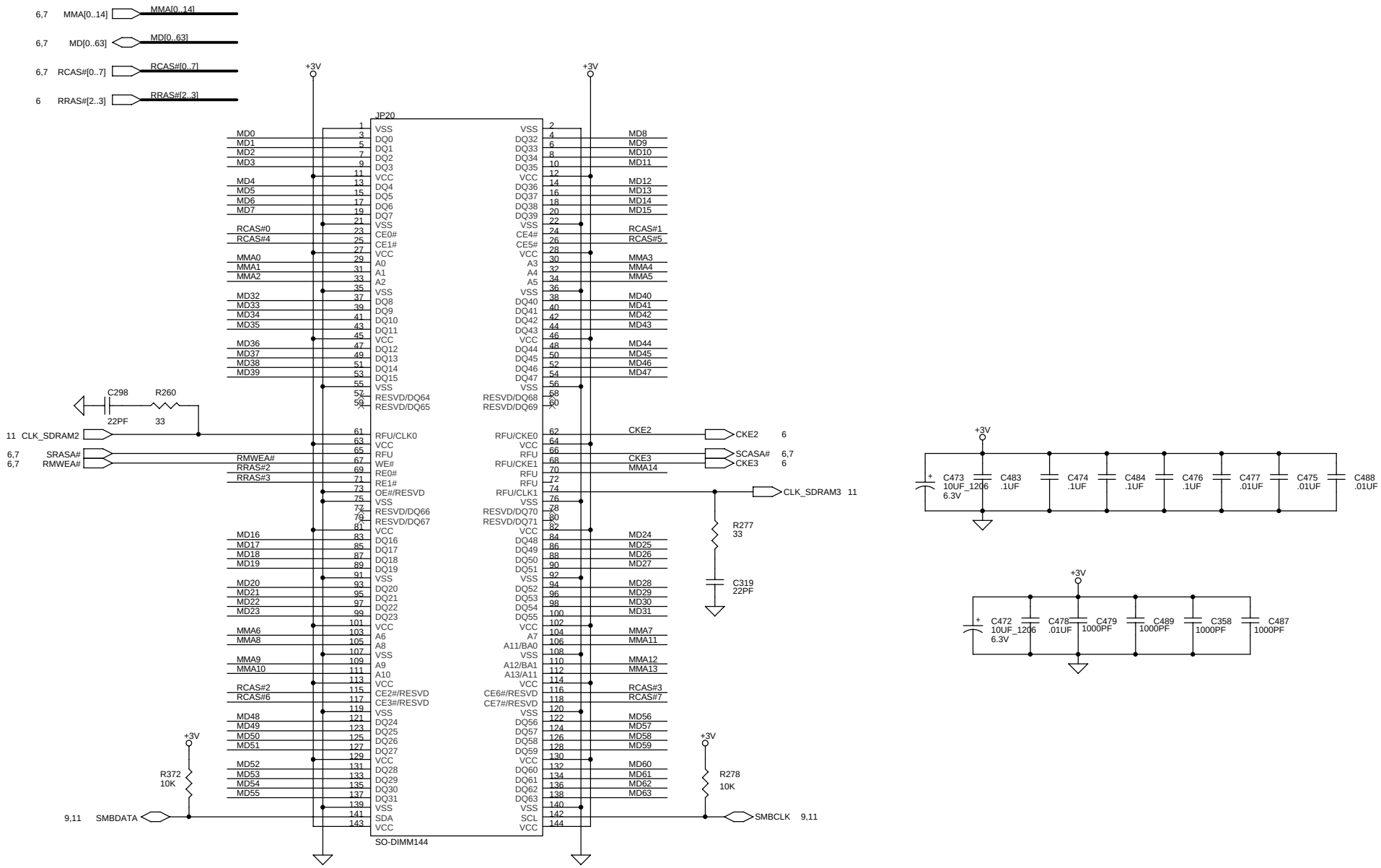

DIMM1

Compal Electronics, Inc.

Title: SCHEMATIC, M/B LA-1281

Size: B | Document Number: 401202 | Rev: 1B

Date: 星期二, 十月 22, 2001 | Sheet 8 of 34

PROPRIETARY NOTE THIS SHEET OF ENGINEERING DRAWING IS THE PROPRIETARY PROPERTY OF COMPAL ELECTRONICS, INC. AND CONTAINS CONFIDENTIAL AND TRADE SECRET INFORMATION. THIS SHEET MAY NOT BE TRANSFERRED FROM THE CUSTODY OF THE COMPETENT DIVISION OF R&D DEPARTMENT EXCEPT AS AUTHORIZED BY COMPAL ELECTRONICS, INC. NEITHER THIS SHEET NOR THE INFORMATION IT CONTAINS MAY BE USED BY OR DISCLOSED TO ANY THIRD PARTY WITHOUT PRIOR WRITTEN CONSENT OF COMPAL ELECTRONICS, INC.

VT82C686A-A

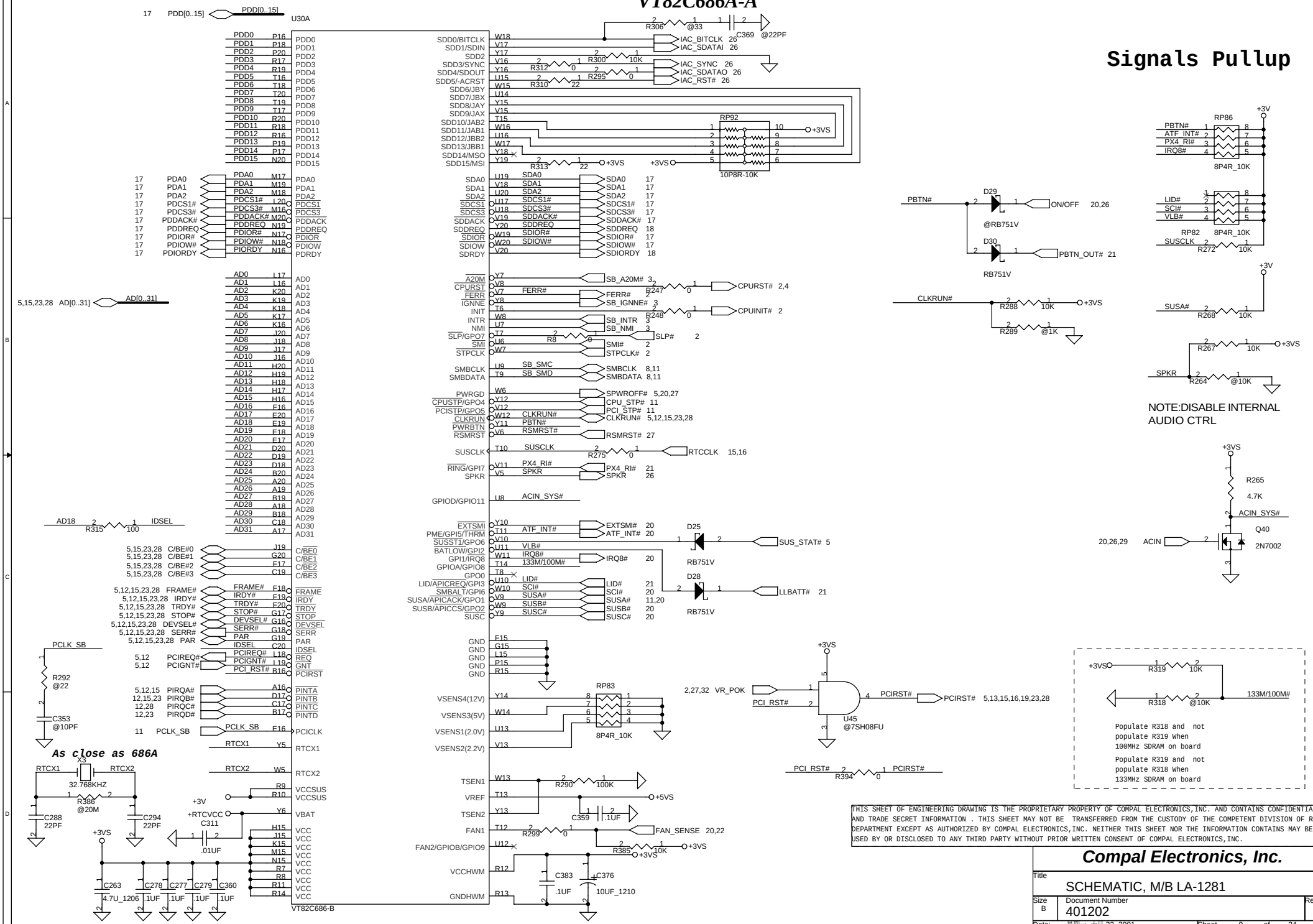

Signals Pullup

THIS SHEET OF ENGINEERING DRAWING IS THE PROPRIETARY PROPERTY OF COMPAL ELECTRONICS,INC. AND CONTAINS CONFIDENTIAL AND TRADE SECRET INFORMATION . THIS SHEET MAY NOT BE TRANSFERRED FROM THE CUSTODY OF THE COMPETENT DIVISION OF R&D DEPARTMENT EXCEPT AS AUTHORIZED BY COMPAL ELECTRONICS,INC. NEITHER THIS SHEET NOR THE INFORMATION CONTAINS MAY BE USED BY OR DISCLOSED TO ANY THIRD PARTY WITHOUT PRIOR WRITTEN CONSENT OF COMPAL ELECTRONICS,INC.

Compal Electronics, Inc.

Title	SCHEMATIC, M/B LA-1281
Size B	Document Number 401202
Rev	1B
Date:	星期二, 十月 22, 2001
Sheet	9 of 34

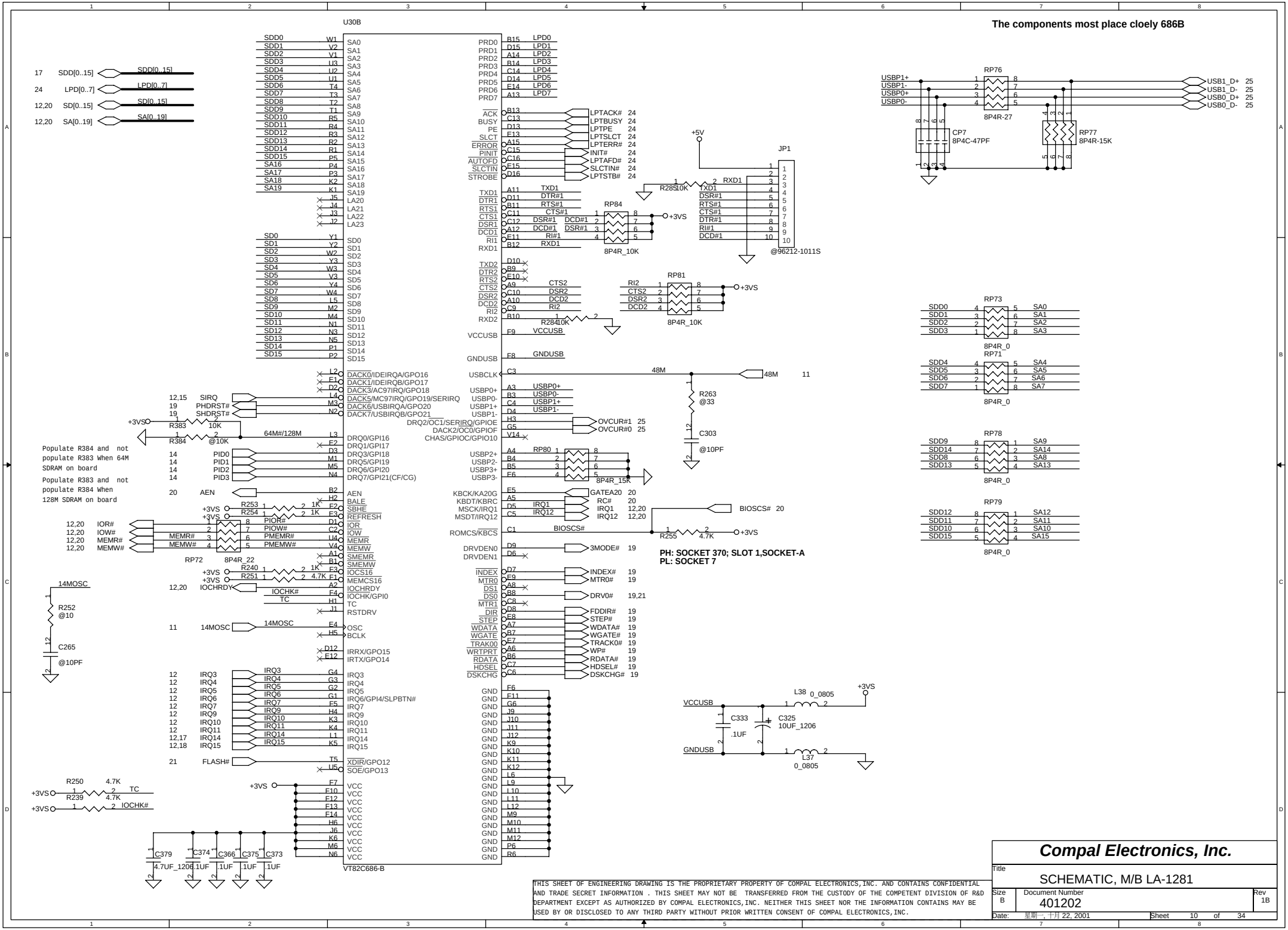

THIS SHEET OF ENGINEERING DRAWING IS THE PROPRIETARY PROPERTY OF COMPAL ELECTRONICS,INC. AND CONTAINS CONFIDENTIAL AND TRADE SECRET INFORMATION . THIS SHEET MAY NOT BE TRANSFERRED FROM THE CUSTODY OF THE COMPETENT DIVISION OF R&D DEPARTMENT EXCEPT AS AUTHORIZED BY COMPAL ELECTRONICS,INC. NEITHER THIS SHEET NOR THE INFORMATION CONTAINS MAY BE USED BY OR DISCLOSED TO ANY THIRD PARTY WITHOUT PRIOR WRITTEN CONSENT OF COMPAL ELECTRONICS,INC.

CLOCK GENERATOR & BUFFER

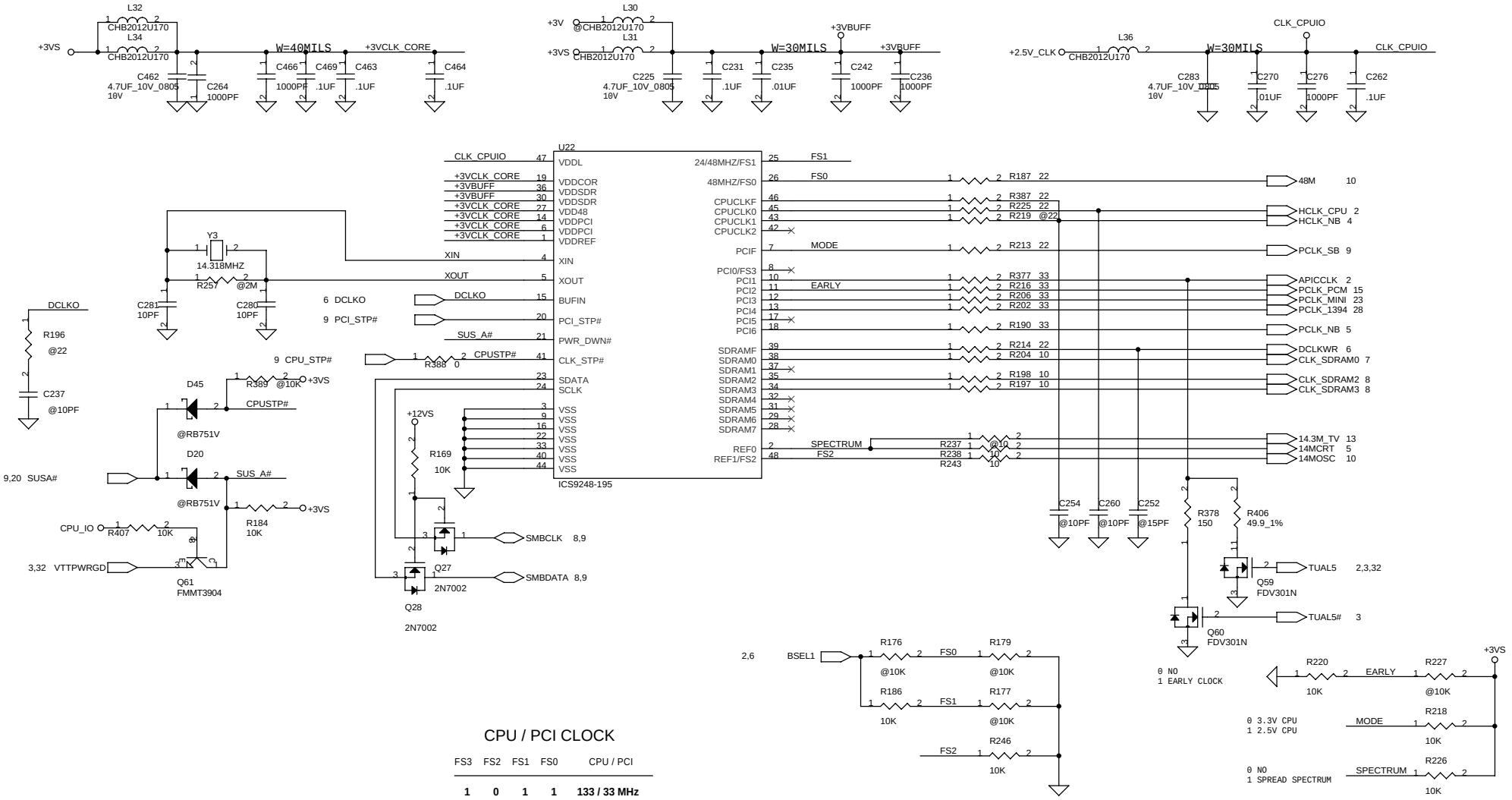

CPU / PCI CLOCK

FS3	FS2	FS1	FS0	CPU / PCI
1	0	1	1	133 / 33 MHz
1	0	0	0	100 / 33 MHz
1	1	1	0	66 / 33 MHz

THIS SHEET OF ENGINEERING DRAWING IS THE PROPRIETARY PROPERTY OF COMPAL ELECTRONICS,INC. AND CONTAINS CONFIDENTIAL AND TRADE SECRET INFORMATION . THIS SHEET MAY NOT BE TRANSFERRED FROM THE CUSTODY OF THE COMPETENT DIVISION OF R&D DEPARTMENT EXCEPT AS AUTHORIZED BY COMPAL ELECTRONICS,INC. NEITHER THIS SHEET NOR THE INFORMATION CONTAINS MAY BE USED BY OR DISCLOSED TO ANY THIRD PARTY WITHOUT PRIOR WRITTEN CONSENT OF COMPAL ELECTRONICS,INC.

Compal Electronics, Inc.

Title: SCHEMATIC, M/B LA-1281

Size | Document Number: 401202 | Rev: 1B

Date: 星期一, 十月 22, 2001 | Sheet 11 of 34

ISA BUS Pullup

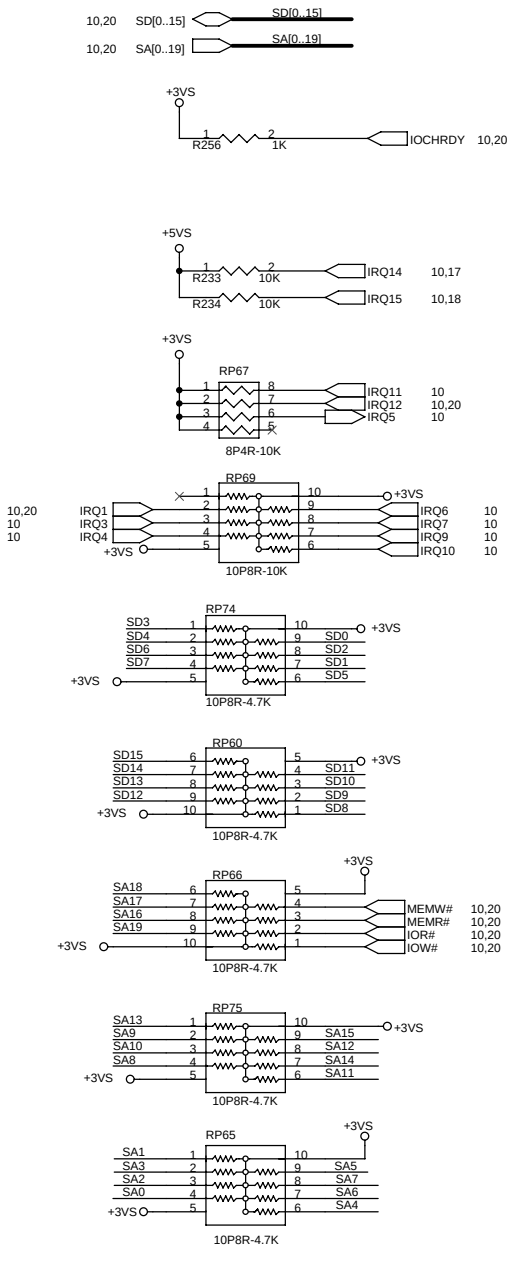

PCI BUS Pullup

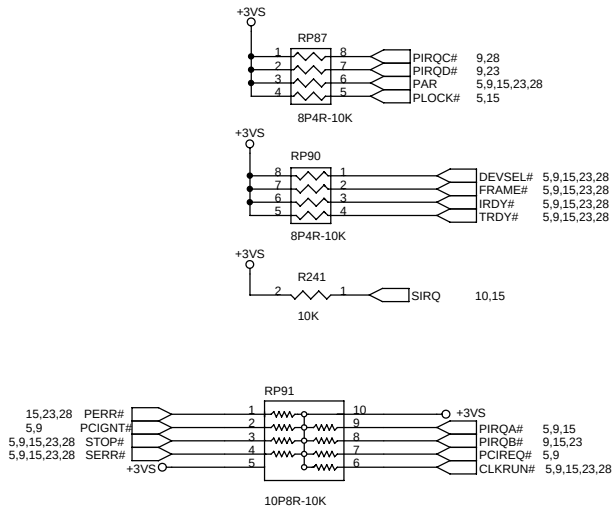

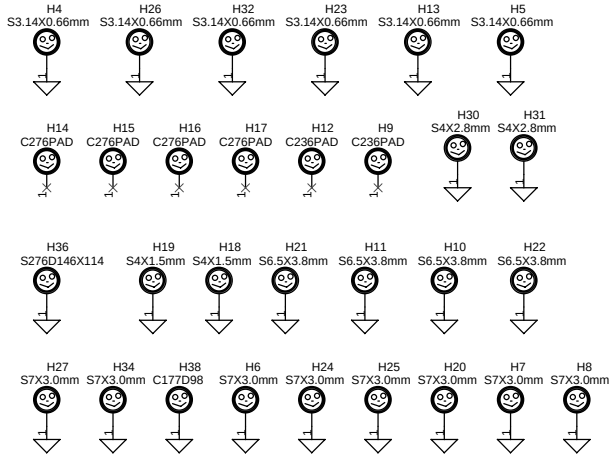

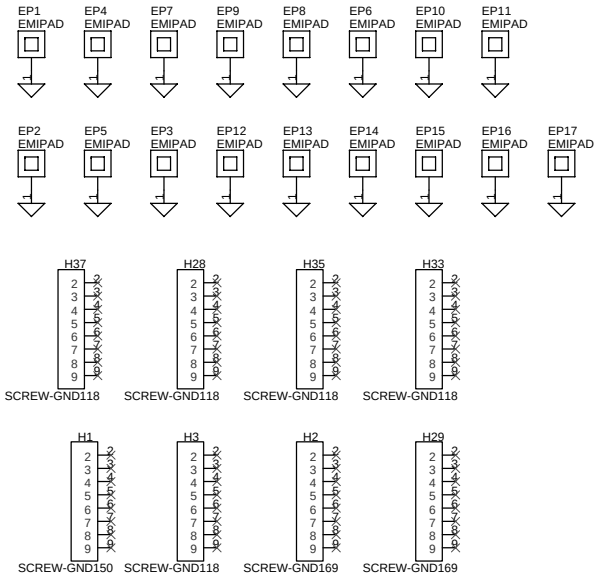

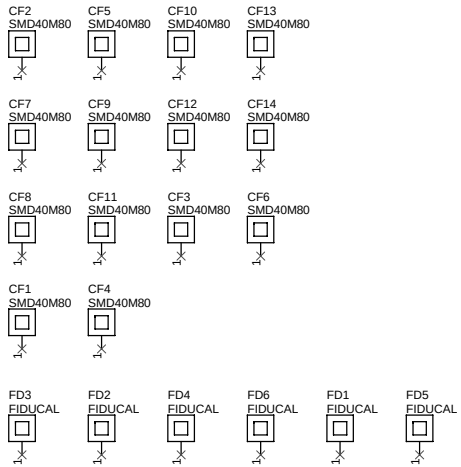

PROPRIETARY NOTE THIS SHEET OF ENGINEERING DRAWING IS THE PROPRIETARY PROPERTY OF COMPAL ELECTRONICS, INC. AND CONTAINS CONFIDENTIAL AND TRADE SECRET INFORMATION. THIS SHEET MAY NOT BE TRANSFERRED FROM THE CUSTODY OF THE COMPETENT DIVISION OF R&D DEPARTMENT EXCEPT AS AUTHORIZED BY COMPAL ELECTRONICS, INC. NEITHER THIS SHEET NOR THE INFORMATION IT CONTAINS MAY BE USED BY OR DISCLOSED TO ANY THIRD PARTY WITHOUT PRIOR WRITTEN CONSENT OF COMPAL ELECTRONICS, INC.

Compal Electronics, Inc.

Title	SCHEMATIC, M/B LA-1281	
Size B	Document Number 401202	Rev 1B
Date: 星期一, 十月 22, 2001	Sheet 12 of 34	

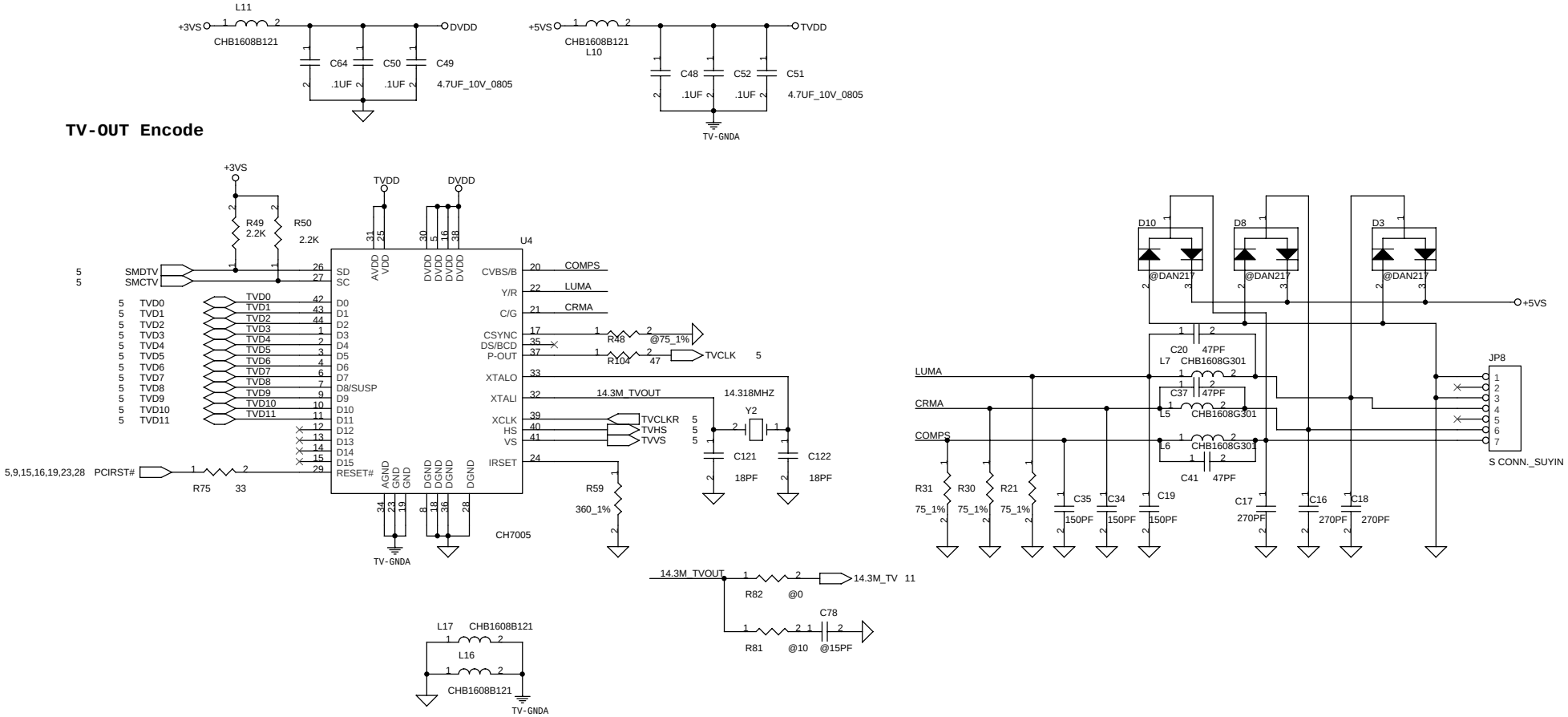

PROPRIETARY NOTE THIS SHEET OF ENGINEERING DRAWING IS THE PROPRIETARY PROPERTY OF COMPAL ELECTRONICS, INC. AND CONTAINS CONFIDENTIAL AND TRADE SECRET INFORMATION. THIS SHEET MAY NOT BE TRANSFERRED FROM THE CUSTODY OF THE COMPETENT DIVISION OF R&D DEPARTMENT EXCEPT AS AUTHORIZED BY COMPAL ELECTRONICS, INC. NEITHER THIS SHEET NOR THE INFORMATION IT CONTAINS MAY BE USED BY OR DISCLOSED TO ANY THIRD PARTY WITHOUT PRIOR WRITTEN CONSENT OF COMPAL ELECTRONICS, INC.

Compal Electronics, Inc.

Title	SCHEMATIC, M/B LA-1281
Size B	Document Number 401202
Rev	1B
Date:	星期一, 十月 22, 2001
Sheet	13 of 34

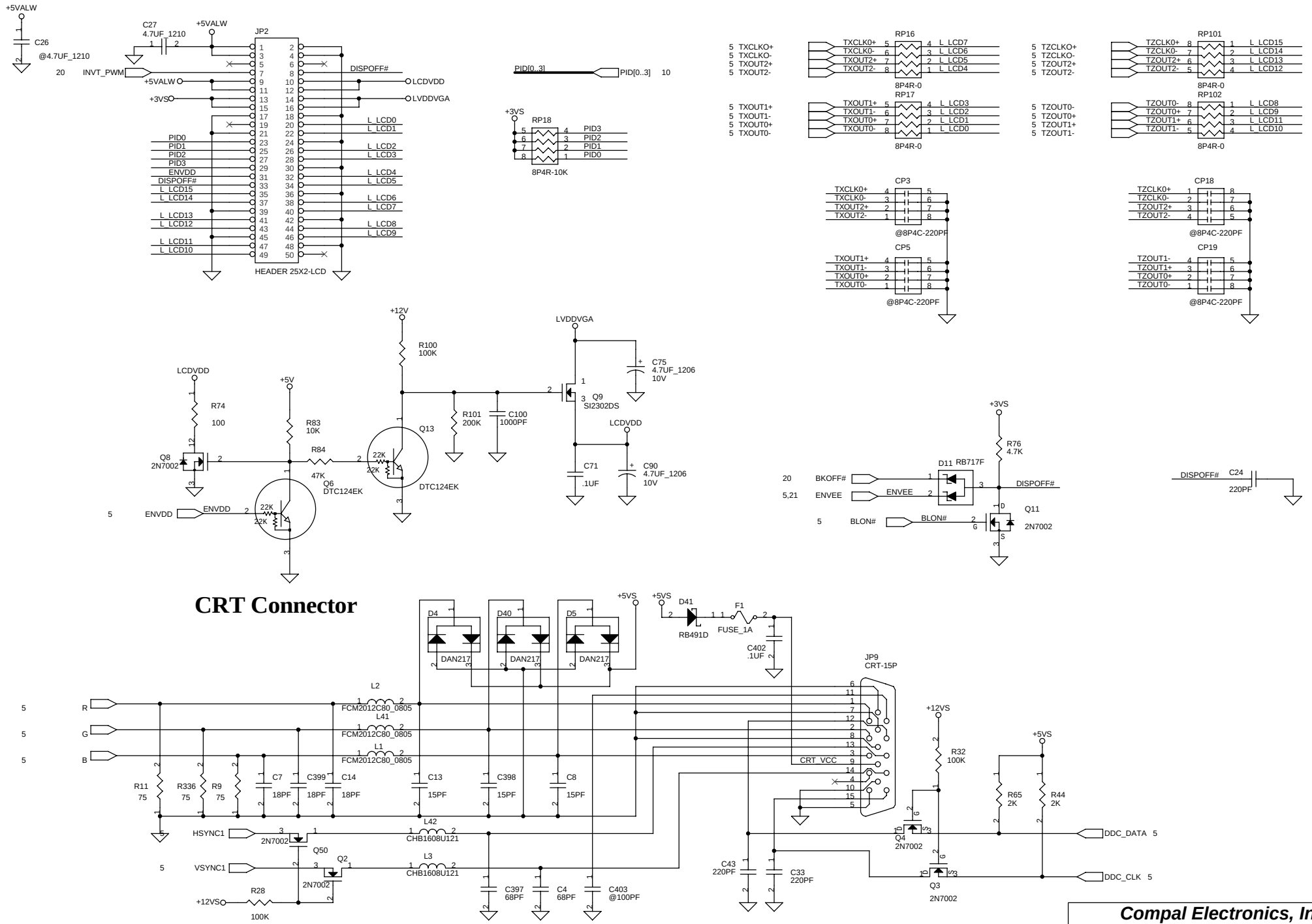

Compal Electronics, Inc.	
Title	SCHEMATIC, M/B LA-1281
Size B	Document Number 401202
Rev	1B
Date:	星期一, 十月 22, 2001
Sheet	14 of 34

PROPRIETARY NOTE THIS SHEET OF ENGINEERING DRAWING IS THE PROPRIETARY PROPERTY OF COMPAL ELECTRONICS, INC. AND CONTAINS CONFIDENTIAL AND TRADE SECRET INFORMATION. THIS SHEET MAY NOT BE TRANSFERRED FROM THE CUSTODY OF THE COMPETENT DIVISION OF R&D DEPARTMENT EXCEPT AS AUTHORIZED BY COMPAL ELECTRONICS, INC. NEITHER THIS SHEET NOR THE INFORMATION IT CONTAINS MAY BE USED BY OR DISCLOSED TO ANY THIRD PARTY WITHOUT PRIOR WRITTEN CONSENT OF COMPAL ELECTRONICS, INC.

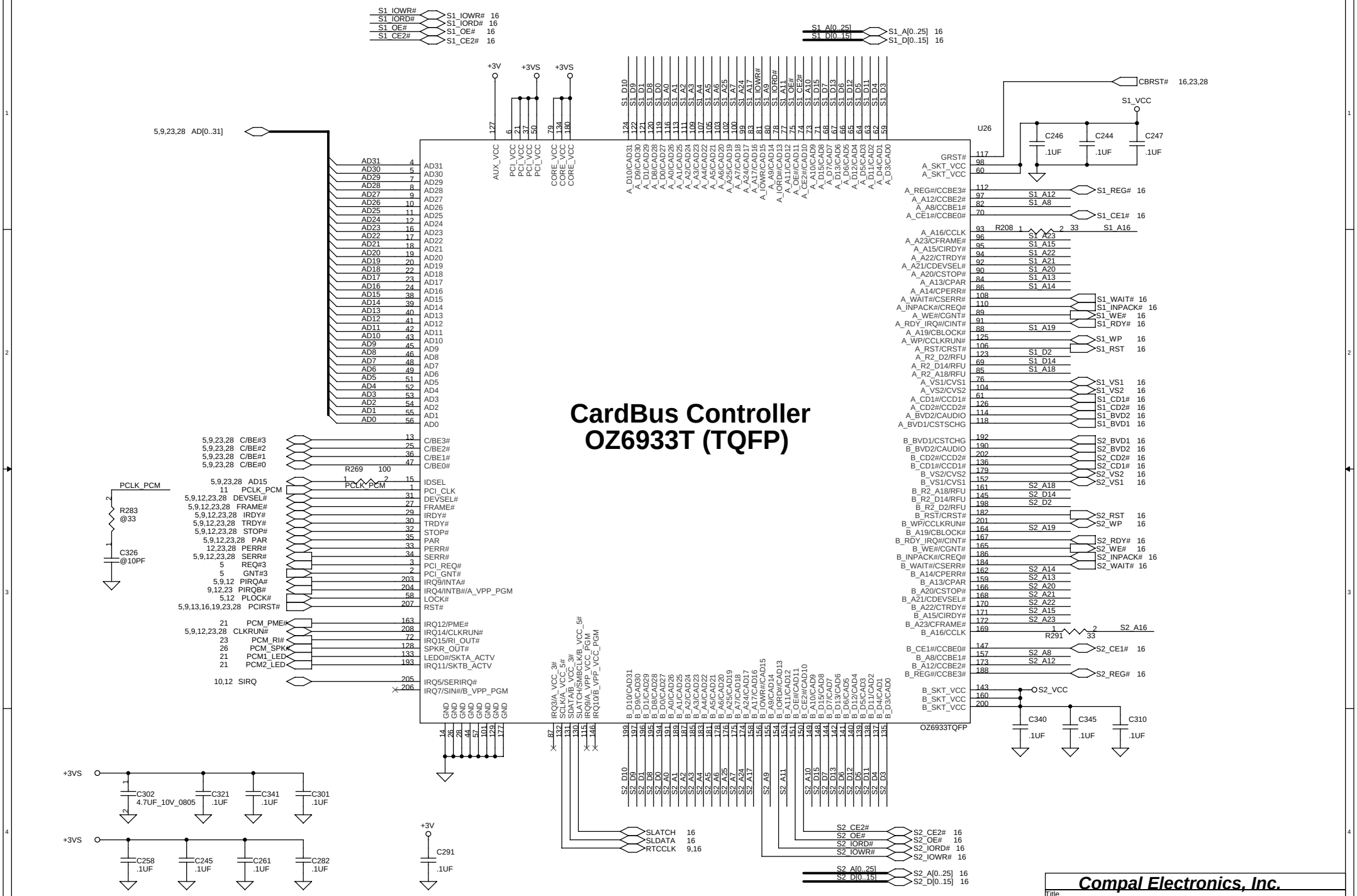

THIS SHEET OF ENGINEERING DRAWING IS THE PROPRIETARY PROPERTY OF COMPAL ELECTRONICS, INC. AND CONTAINS CONFIDENTIAL AND TRADE SECRET INFORMATION. THIS SHEET MAY NOT BE TRANSFERRED FROM THE CUSTODY OF THE COMPETENT DIVISION OF R&D DEPARTMENT EXCEPT AS AUTHORIZED BY COMPAL ELECTRONICS, INC. NEITHER THIS SHEET NOR THE INFORMATION IT CONTAINS MAY BE USED BY OR DISCLOSED TO ANY THIRD PARTY WITHOUT PRIOR WRITTEN CONSENT OF COMPAL ELECTRONICS, INC.

Compal Electronics, Inc.

Title: SCHEMATIC, M/B LA-1281

Size	Document Number	Rev
Custom	401202	1B

Date: 星期一, 十月 22, 2001 Sheet 15 of 34

PCMCIA POWER CTRL.

Wire ZV PORT to Slot A

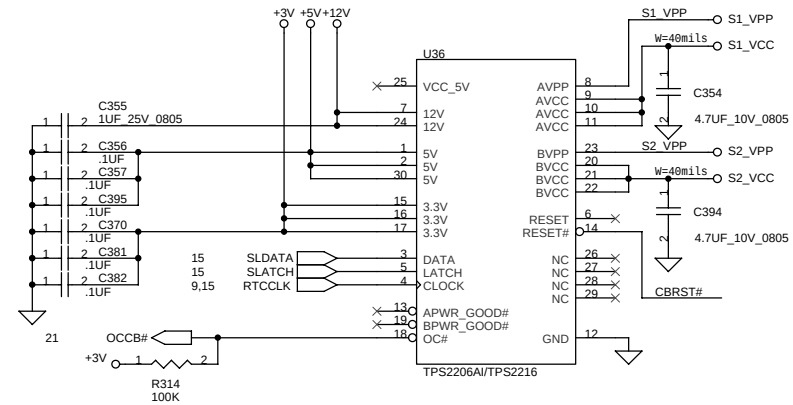

CARDBUS SOCKET

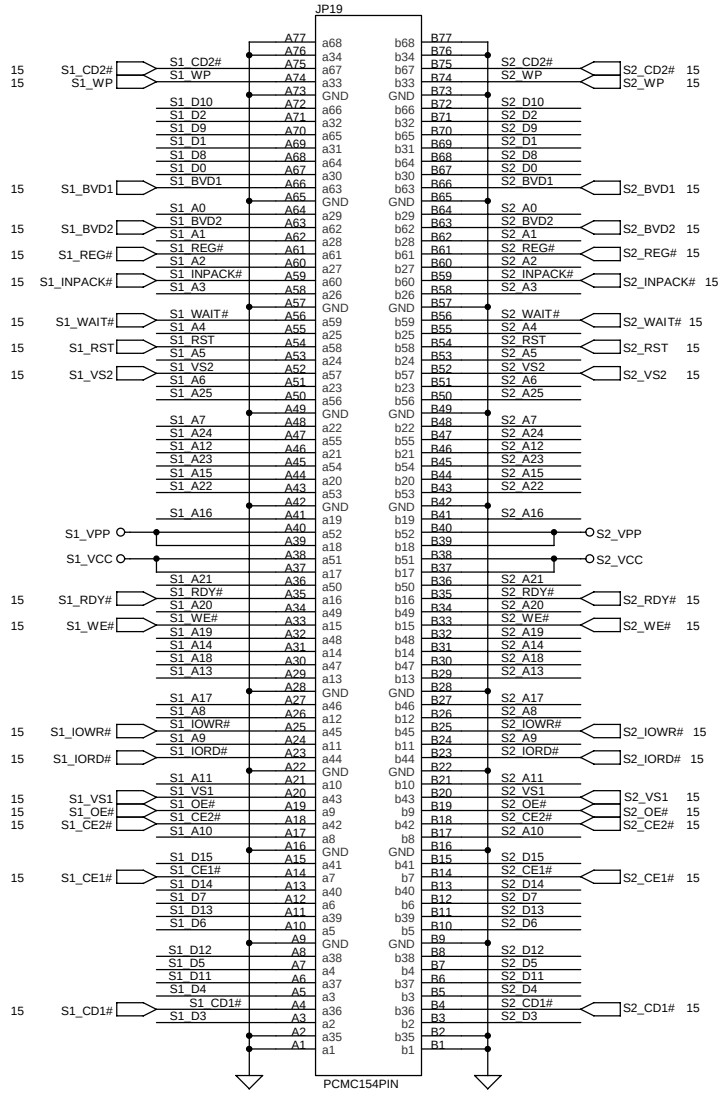

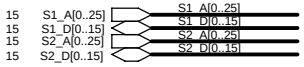

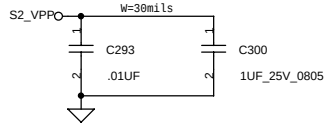

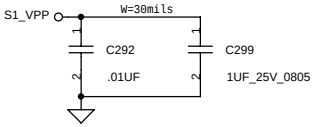

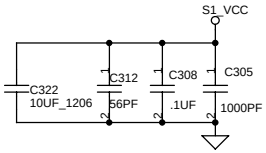

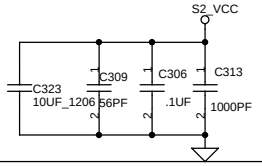

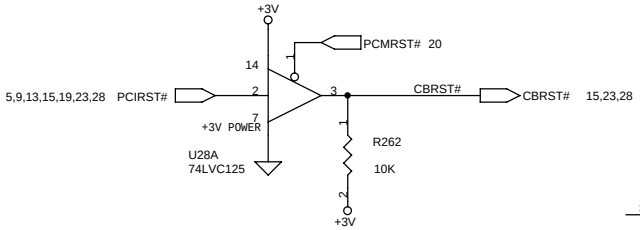

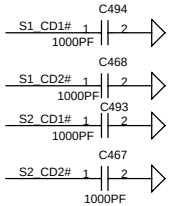

THIS SHEET OF ENGINEERING DRAWING IS THE PROPRIETARY PROPERTY OF COMPAL ELECTRONICS,INC. AND CONTAINS CONFIDENTIAL AND TRADE SECRET INFORMATION . THIS SHEET MAY NOT BE TRANSFERRED FROM THE CUSTODY OF THE COMPETENT DIVISION OF R&D DEPARTMENT EXCEPT AS AUTHORIZED BY COMPAL ELECTRONICS,INC. NEITHER THIS SHEET NOR THE INFORMATION CONTAINS MAY BE USED BY OR DISCLOSED TO ANY THIRD PARTY WITHOUT PRIOR WRITTEN CONSENT OF COMPAL ELECTRONICS,INC.

Compal Electronics, Inc.

Title	SCHEMATIC, M/B LA-1281
Size	B
Document Number	401202
Rev	1B
Date:	星期一, 十月 22, 2001
Sheet	16 of 34

IDE Series Resistor
Place them close SB

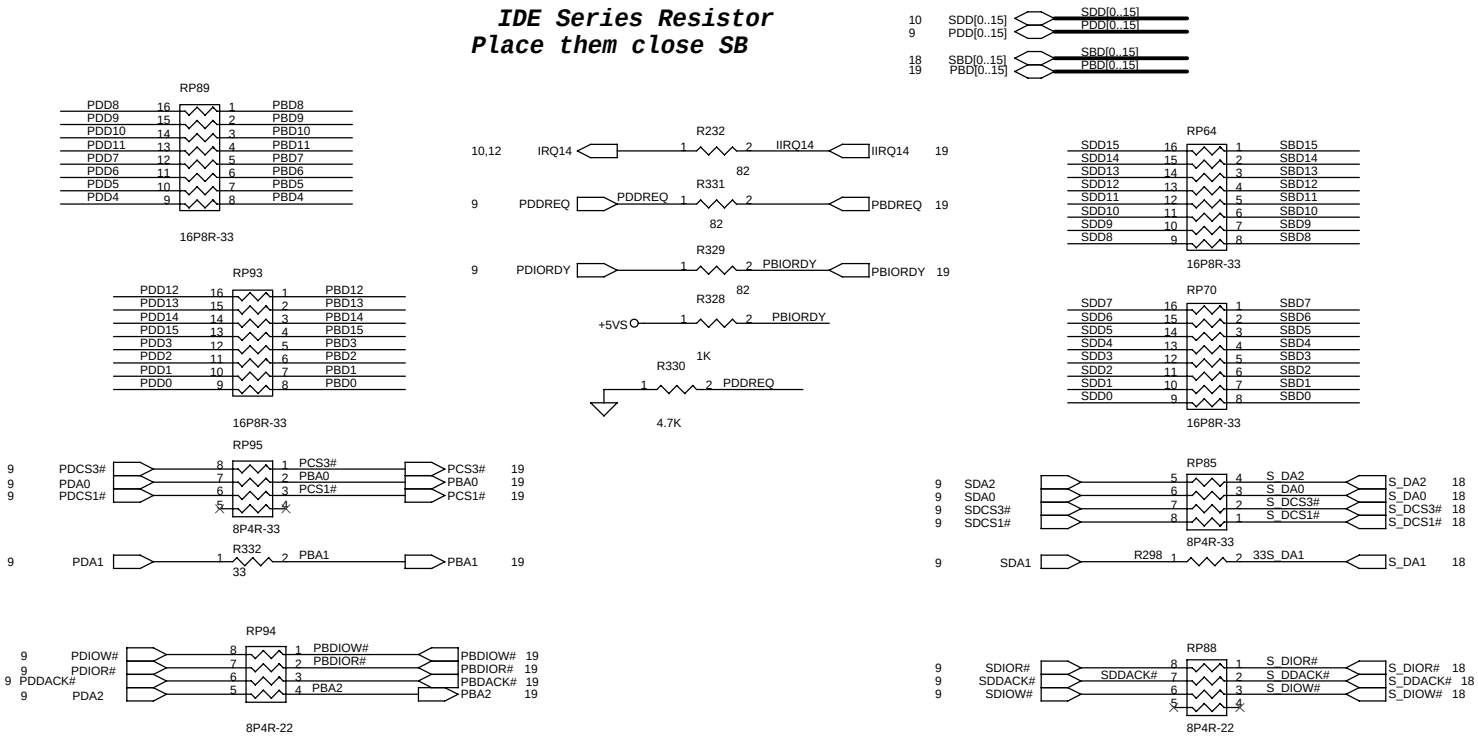

THIS SHEET OF ENGINEERING DRAWING IS THE PROPRIETARY PROPERTY OF COMPAL ELECTRONICS,INC. AND CONTAINS CONFIDENTIAL AND TRADE SECRET INFORMATION . THIS SHEET MAY NOT BE TRANSFERRED FROM THE CUSTODY OF THE COMPETENT DIVISION OF R&D DEPARTMENT EXCEPT AS AUTHORIZED BY COMPAL ELECTRONICS,INC. NEITHER THIS SHEET NOR THE INFORMATION CONTAINS MAY BE USED BY OR DISCLOSED TO ANY THIRD PARTY WITHOUT PRIOR WRITTEN CONSENT OF COMPAL ELECTRONICS,INC.

Compal Electronics, Inc.

Title	SCHEMATIC, M/B LA-1281
Size B	Document Number 401202
Rev	1B
Date:	星期一, 十月 22, 2001
Sheet	17 of 34

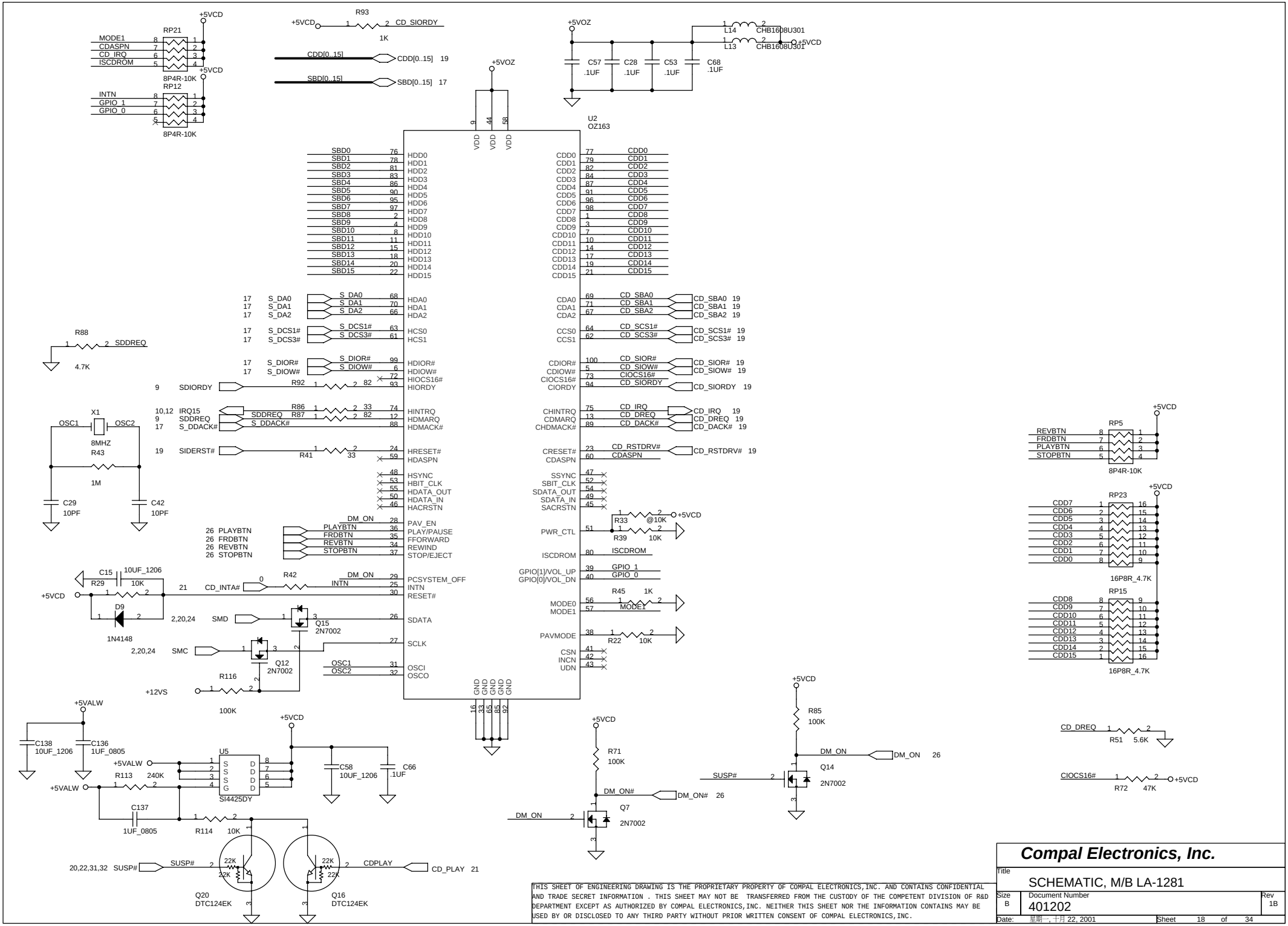

THIS SHEET OF ENGINEERING DRAWING IS THE PROPRIETARY PROPERTY OF COMPAL ELECTRONICS,INC. AND CONTAINS CONFIDENTIAL AND TRADE SECRET INFORMATION . THIS SHEET MAY NOT BE TRANSFERRED FROM THE CUSTODY OF THE COMPETENT DIVISION OF R&D DEPARTMENT EXCEPT AS AUTHORIZED BY COMPAL ELECTRONICS,INC. NEITHER THIS SHEET NOR THE INFORMATION CONTAINS MAY BE USED BY OR DISCLOSED TO ANY THIRD PARTY WITHOUT PRIOR WRITTEN CONSENT OF COMPAL ELECTRONICS,INC.

Compal Electronics, Inc.

Title	SCHEMATIC, M/B LA-1281
Size	B
Document Number	401202
Rev	1B
Date:	星期一, 十月 22, 2001
Sheet	18 of 34

IDE,CD-ROM & FDD Module CONN.

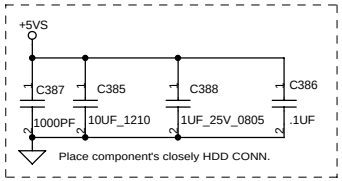

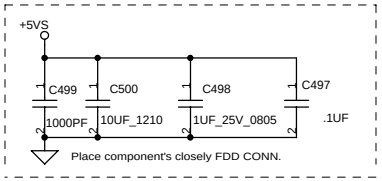

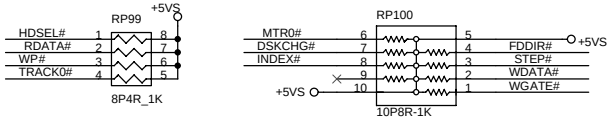

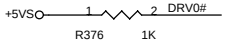

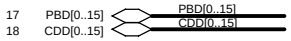

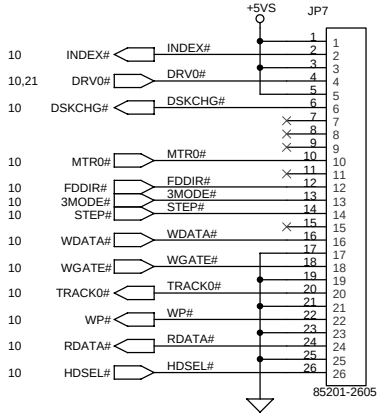

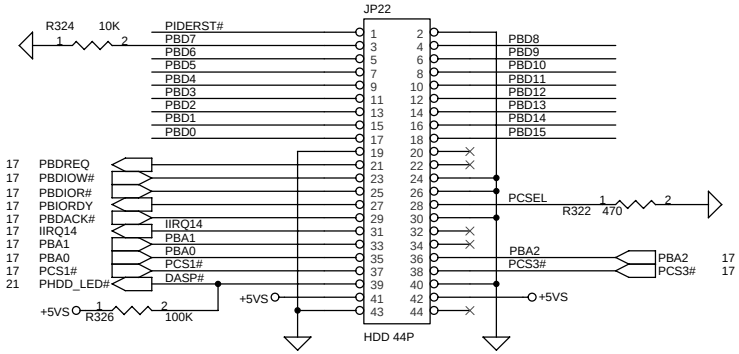

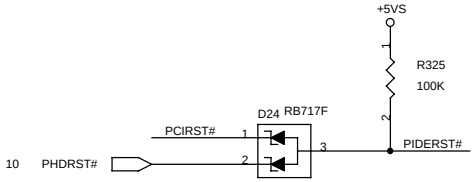

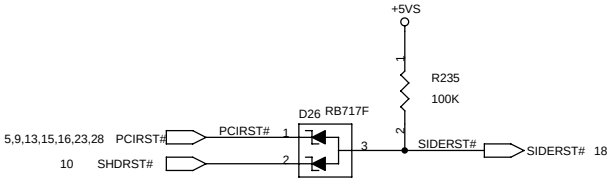

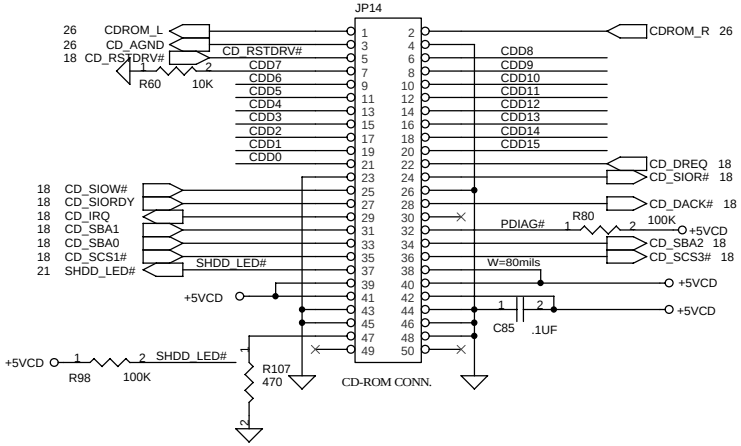

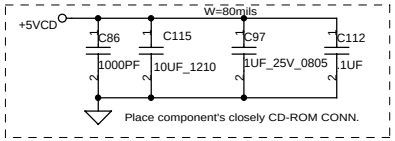

THIS SHEET OF ENGINEERING DRAWING IS THE PROPRIETARY PROPERTY OF COMPAL ELECTRONICS,INC. AND CONTAINS CONFIDENTIAL AND TRADE SECRET INFORMATION . THIS SHEET MAY NOT BE TRANSFERRED FROM THE CUSTODY OF THE COMPETENT DIVISION OF R&D DEPARTMENT EXCEPT AS AUTHORIZED BY COMPAL ELECTRONICS,INC. NEITHER THIS SHEET NOR THE INFORMATION CONTAINS MAY BE USED BY OR DISCLOSED TO ANY THIRD PARTY WITHOUT PRIOR WRITTEN CONSENT OF COMPAL ELECTRONICS,INC.

Compal Electronics, Inc.

Title	SCHEMATIC, M/B LA-1281	
Size B	Document Number 401202	Rev 1B
Date: 星期一, 十月 22, 2001	Sheet 19 of 34	

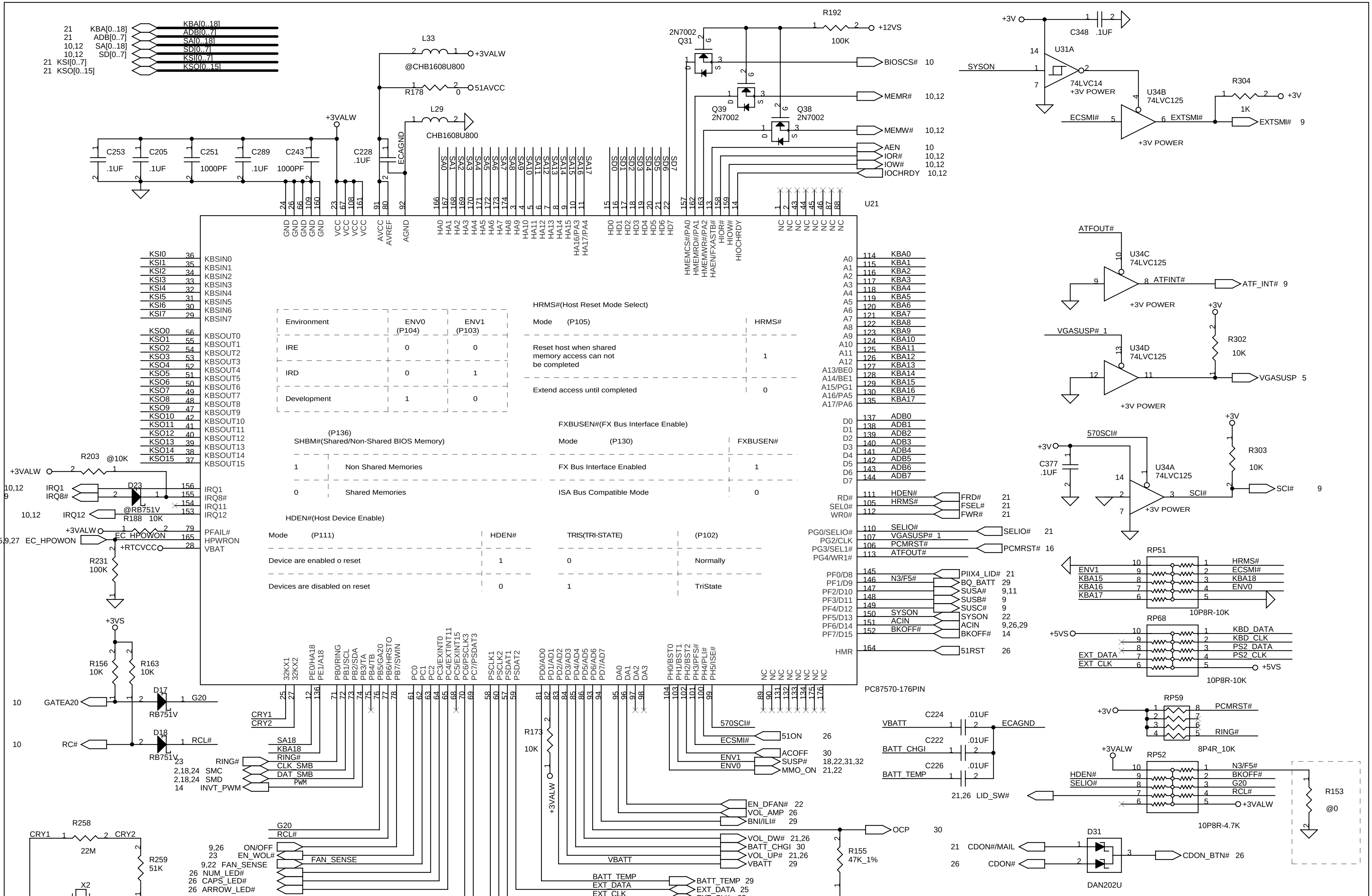

Environment	ENV0 (P104)	ENV1 (P103)
IRE	0	0
IRD	0	1
Development	1	0

HRMS#(Host Reset Mode Select)

Mode (P105)	HRMS#
Reset host when shared memory access can not be completed	1
Extend access until completed	0

SHBM#(Shared/Non-Shared BIOS Memory) (P136)

1	Non Shared Memories
0	Shared Memories

FXBUSEN#(FX Bus Interface Enable)

Mode (P130)	FXBUSEN#
FX Bus Interface Enabled	1
ISA Bus Compatible Mode	0

HDEN#(Host Device Enable)

Mode (P111)	HDEN#	TRIS(TRI-STATE)	(P102)
Device are enabled o reset	1	0	Normally
Devices are disabled on reset	0	1	TriState

THIS SHEET OF ENGINEERING DRAWING IS THE PROPRIETARY PROPERTY OF COMPAL ELECTRONICS,INC. AND CONTAINS CONFIDENTIAL AND TRADE SECRET INFORMATION . THIS SHEET MAY NOT BE TRANSFERRED FROM THE CUSTODY OF THE COMPETENT DIVISION OF R&D DEPARTMENT EXCEPT AS AUTHORIZED BY COMPAL ELECTRONICS,INC. NEITHER THIS SHEET NOR THE INFORMATION CONTAINS MAY BE USED BY OR DISCLOSED TO ANY THIRD PARTY WITHOUT PRIOR WRITTEN CONSENT OF COMPAL ELECTRONICS,INC.

Compal Electronics, Inc.

Title: SCHEMATIC, M/B LA-1281

Size: B | Document Number: 401202 | Rev: 1B

Date: 星期一, 十月 22, 2001 | Sheet 20 of 34

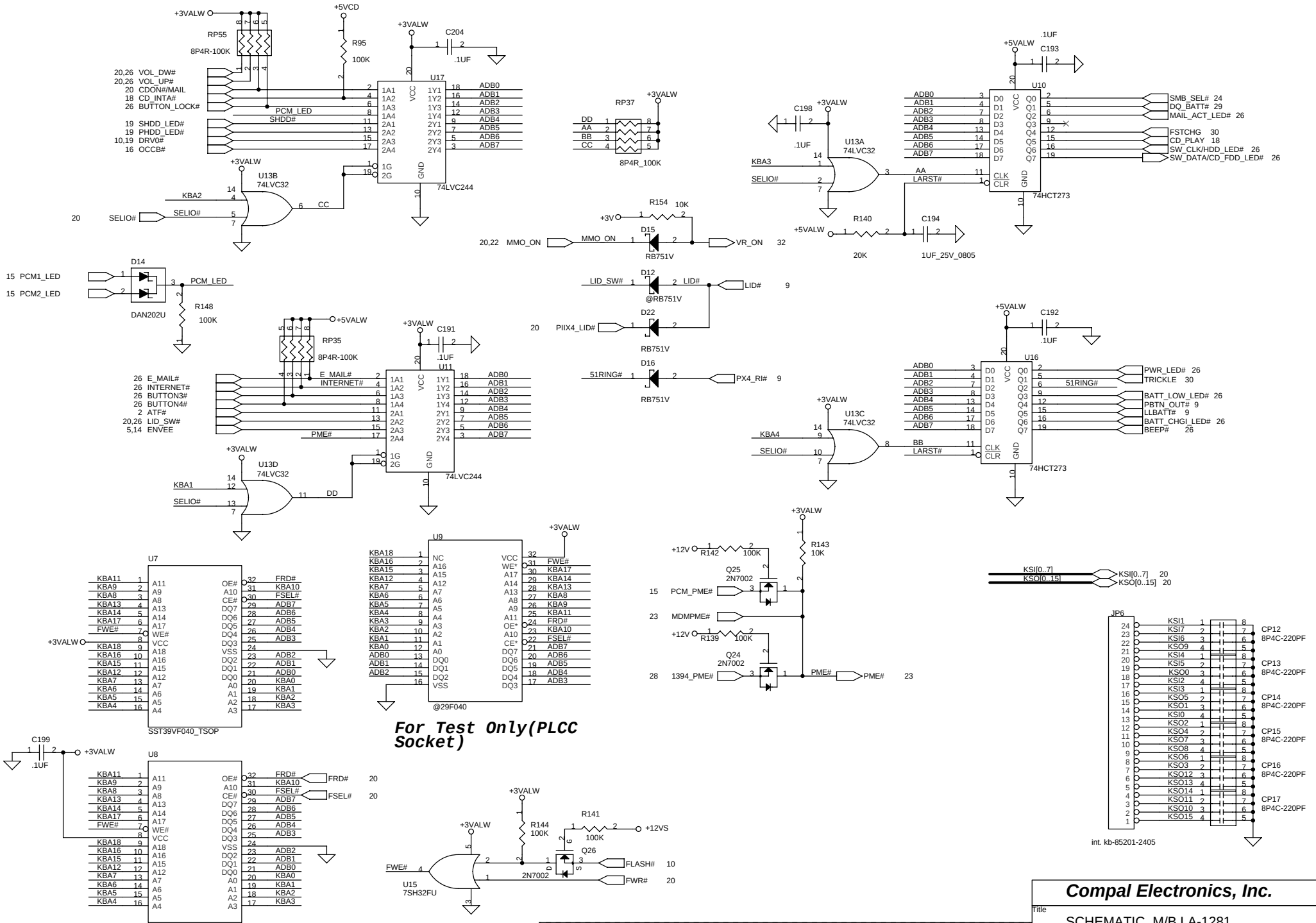

Compal Electronics, Inc.

Title: SCHEMATIC, M/B LA-1281

Size: B | Document Number: 401202 | Rev: 1B

Date: 星期一, 十月 22, 2001 | Sheet 21 of 34

THIS SHEET OF ENGINEERING DRAWING IS THE PROPRIETARY PROPERTY OF COMPAL ELECTRONICS,INC. AND CONTAINS CONFIDENTIAL AND TRADE SECRET INFORMATION . THIS SHEET MAY NOT BE TRANSFERRED FROM THE CUSTODY OF THE COMPETENT DIVISION OF R&D DEPARTMENT EXCEPT AS AUTHORIZED BY COMPAL ELECTRONICS,INC. NEITHER THIS SHEET NOR THE INFORMATION CONTAINS MAY BE USED BY OR DISCLOSED TO ANY THIRD PARTY WITHOUT PRIOR WRITTEN CONSENT OF COMPAL ELECTRONICS,INC.

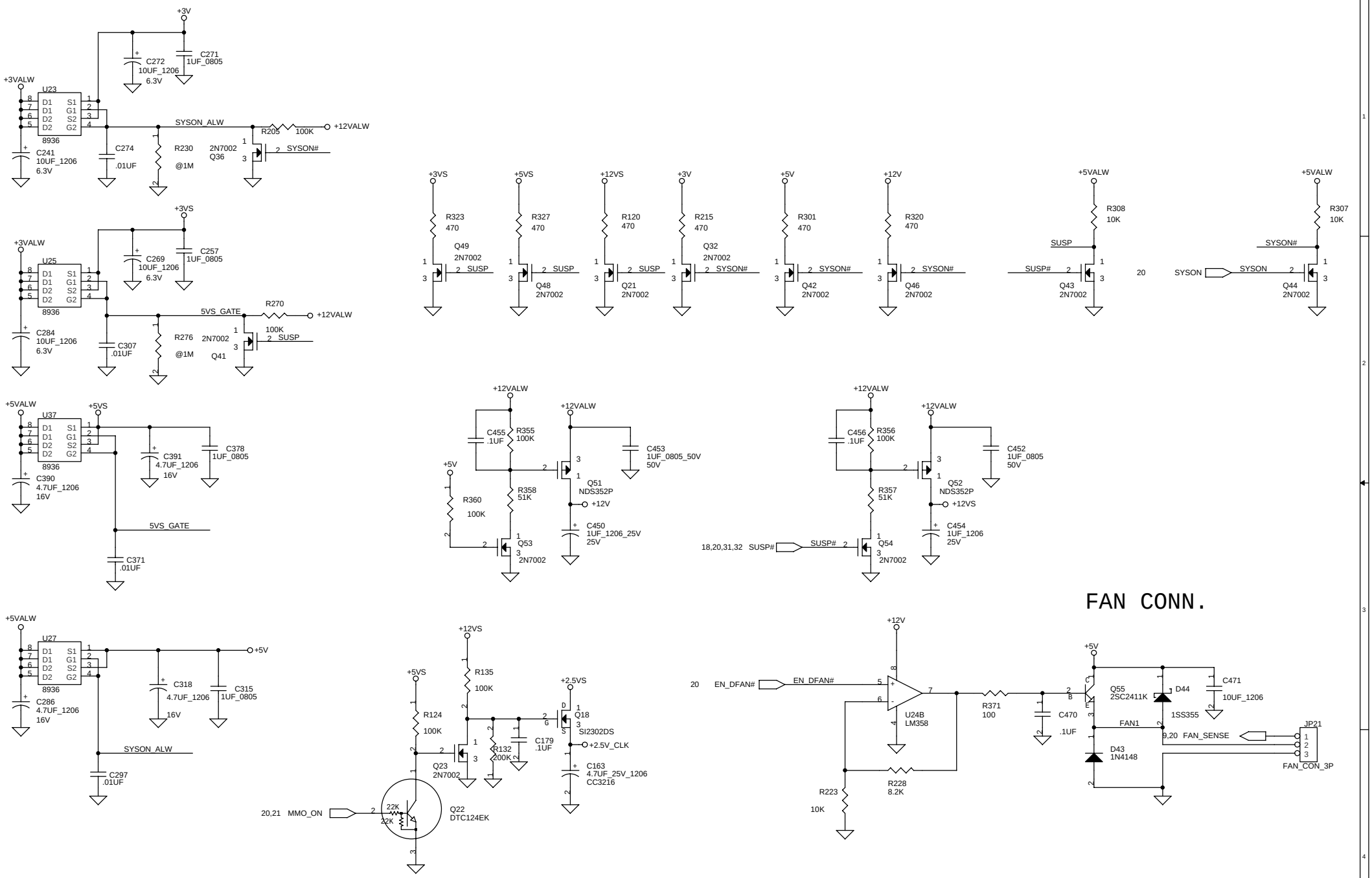

Compal Electronics, Inc.

Title: SCHEMATIC, M/B LA-1281

Size: B | Document Number: 401202 | Rev: 1B

Date: 星期一, 十月 22, 2001 | Sheet 22 of 34

PROPRIETARY NOTE THIS SHEET OF ENGINEERING DRAWING IS THE PROPRIETARY PROPERTY OF COMPAL ELECTRONICS, INC. AND CONTAINS CONFIDENTIAL AND TRADE SECRET INFORMATION. THIS SHEET MAY NOT BE TRANSFERRED FROM THE CUSTODY OF THE COMPETENT DIVISION OF R&D DEPARTMENT EXCEPT AS AUTHORIZED BY COMPAL ELECTRONICS, INC. NEITHER THIS SHEET NOR THE INFORMATION IT CONTAINS MAY BE USED BY OR DISCLOSED TO ANY THIRD PARTY WITHOUT PRIOR WRITTEN CONSENT OF COMPAL ELECTRONICS, INC.

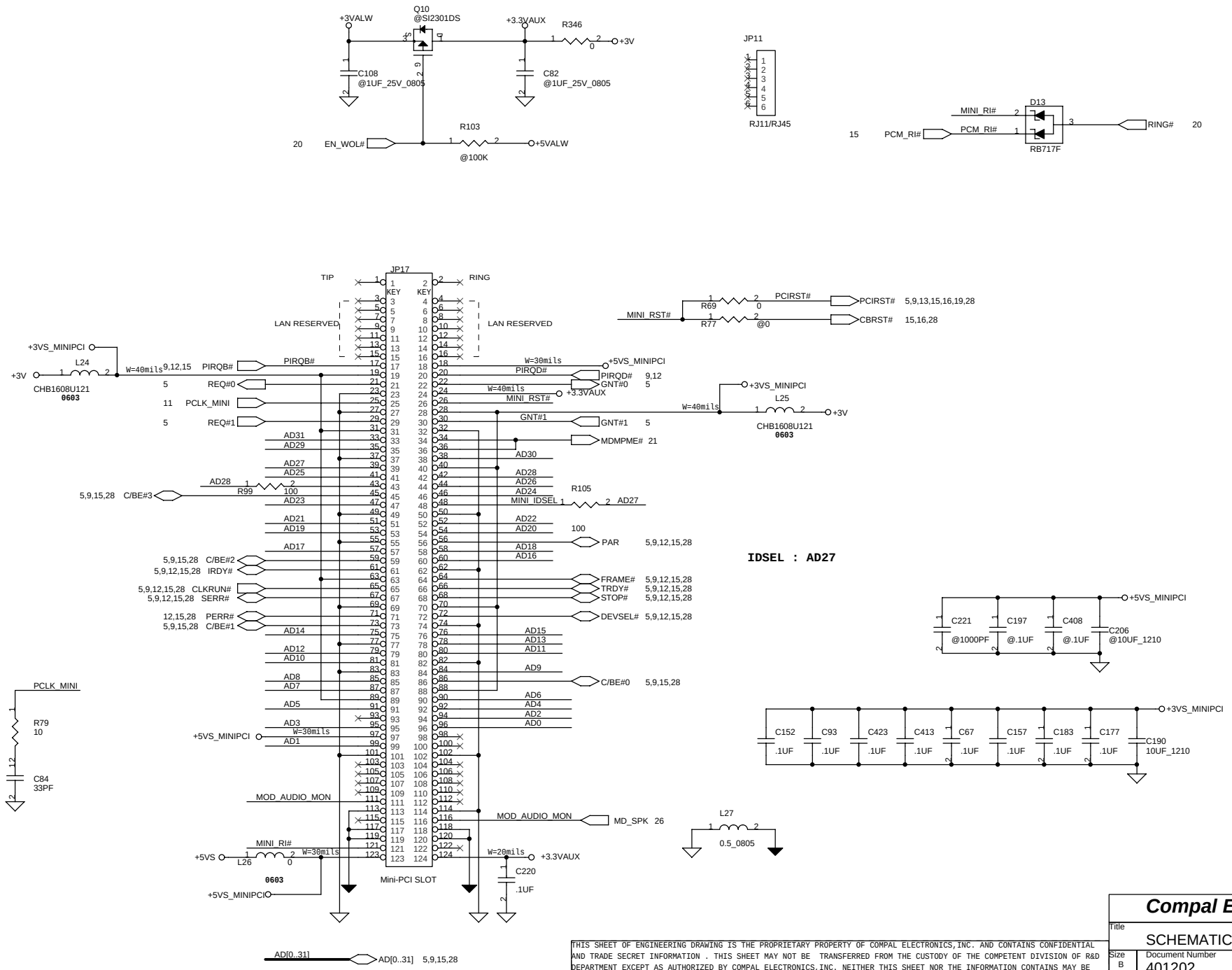

THIS SHEET OF ENGINEERING DRAWING IS THE PROPRIETARY PROPERTY OF COMPAL ELECTRONICS,INC. AND CONTAINS CONFIDENTIAL AND TRADE SECRET INFORMATION . THIS SHEET MAY NOT BE TRANSFERRED FROM THE CUSTODY OF THE COMPETENT DIVISION OF R&D DEPARTMENT EXCEPT AS AUTHORIZED BY COMPAL ELECTRONICS,INC. NEITHER THIS SHEET NOR THE INFORMATION CONTAINS MAY BE USED BY OR DISCLOSED TO ANY THIRD PARTY WITHOUT PRIOR WRITTEN CONSENT OF COMPAL ELECTRONICS,INC.

Compal Electronics, Inc.

Title: SCHEMATIC, M/B LA-1281

Size	Document Number	Rev
B	401202	1B

Date: 星期一, 十月 22, 2001 Sheet 23 of 34

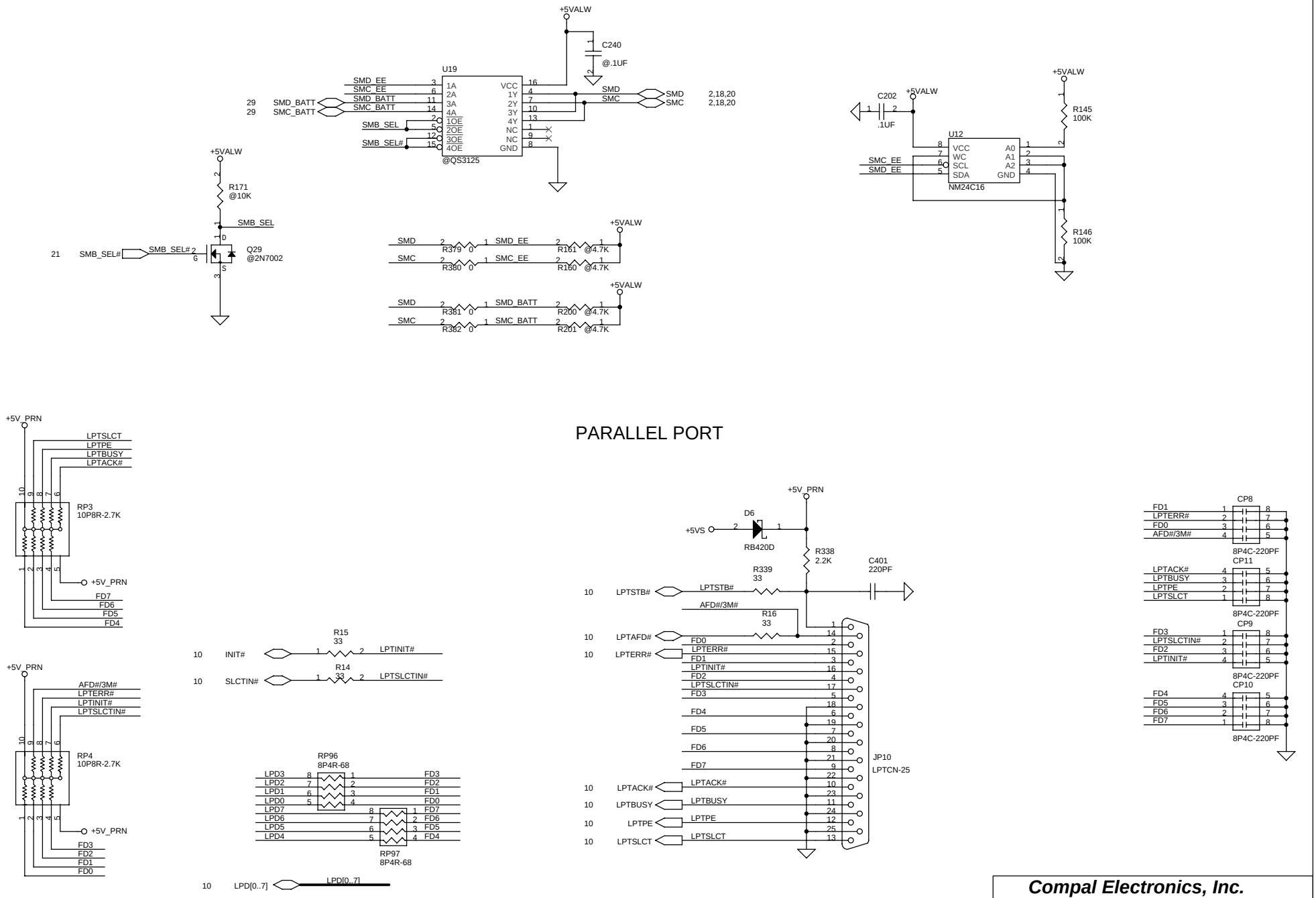

THIS SHEET OF ENGINEERING DRAWING IS THE PROPRIETARY PROPERTY OF COMPAL ELECTRONICS,INC. AND CONTAINS CONFIDENTIAL AND TRADE SECRET INFORMATION . THIS SHEET MAY NOT BE TRANSFERRED FROM THE CUSTODY OF THE COMPETENT DIVISION OF R&D DEPARTMENT EXCEPT AS AUTHORIZED BY COMPAL ELECTRONICS,INC. NEITHER THIS SHEET NOR THE INFORMATION CONTAINS MAY BE USED BY OR DISCLOSED TO ANY THIRD PARTY WITHOUT PRIOR WRITTEN CONSENT OF COMPAL ELECTRONICS,INC.

Compal Electronics, Inc.

Title	SCHEMATIC, M/B LA-1281
Size	Document Number 401202
Rev	1B
Date:	星期一, 十月 22, 2001
Sheet	24 of 34

Keyboard CONN.

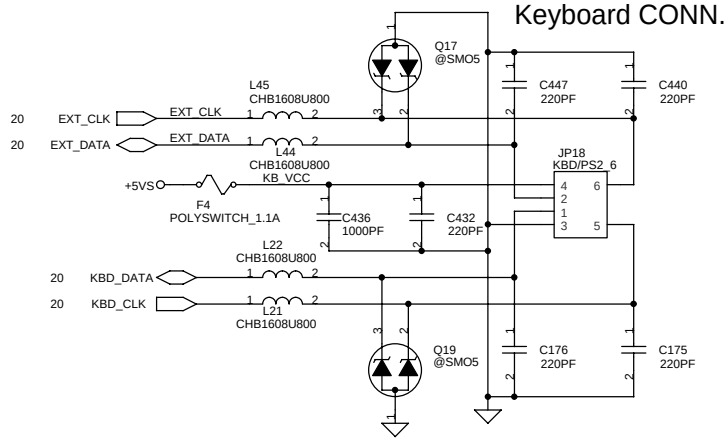

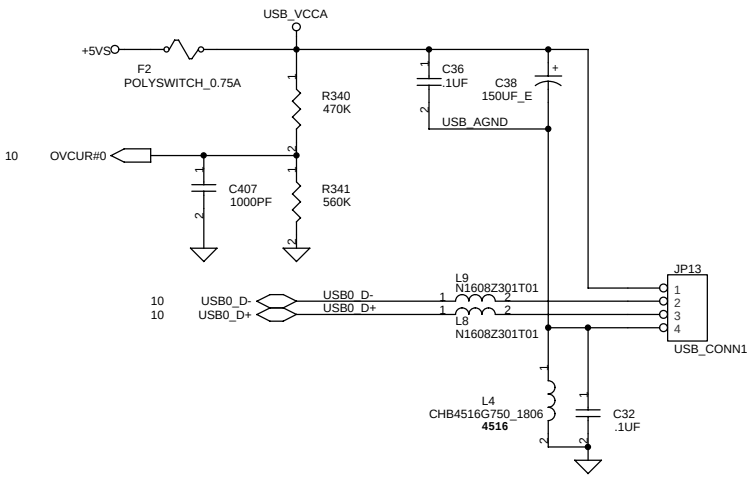

FIR Module

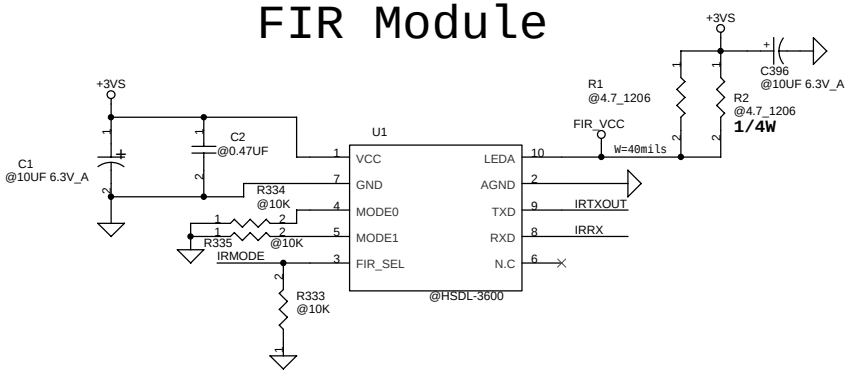

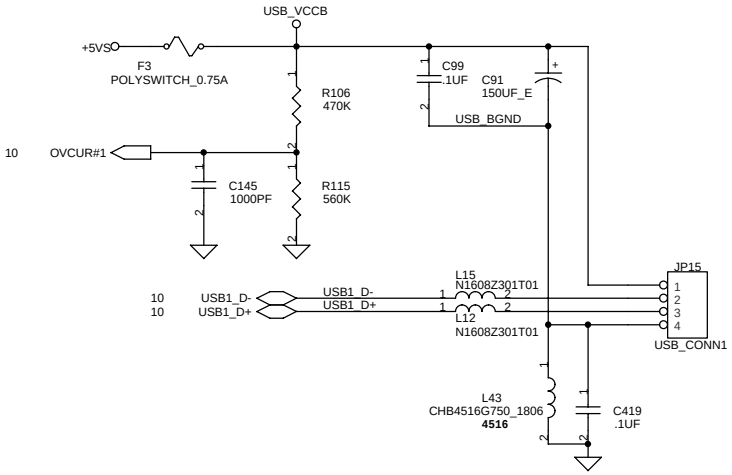

THIS SHEET OF ENGINEERING DRAWING IS THE PROPRIETARY PROPERTY OF COMPAL ELECTRONICS,INC. AND CONTAINS CONFIDENTIAL AND TRADE SECRET INFORMATION . THIS SHEET MAY NOT BE TRANSFERRED FROM THE CUSTODY OF THE COMPETENT DIVISION OF R&D DEPARTMENT EXCEPT AS AUTHORIZED BY COMPAL ELECTRONICS,INC. NEITHER THIS SHEET NOR THE INFORMATION CONTAINS MAY BE USED BY OR DISCLOSED TO ANY THIRD PARTY WITHOUT PRIOR WRITTEN CONSENT OF COMPAL ELECTRONICS,INC.

Compal Electronics, Inc.

Title	SCHEMATIC, M/B LA-1281
Size B	Document Number 401202
Rev	1B
Date:	星期一, 十月 22, 2001
Sheet	25 of 34

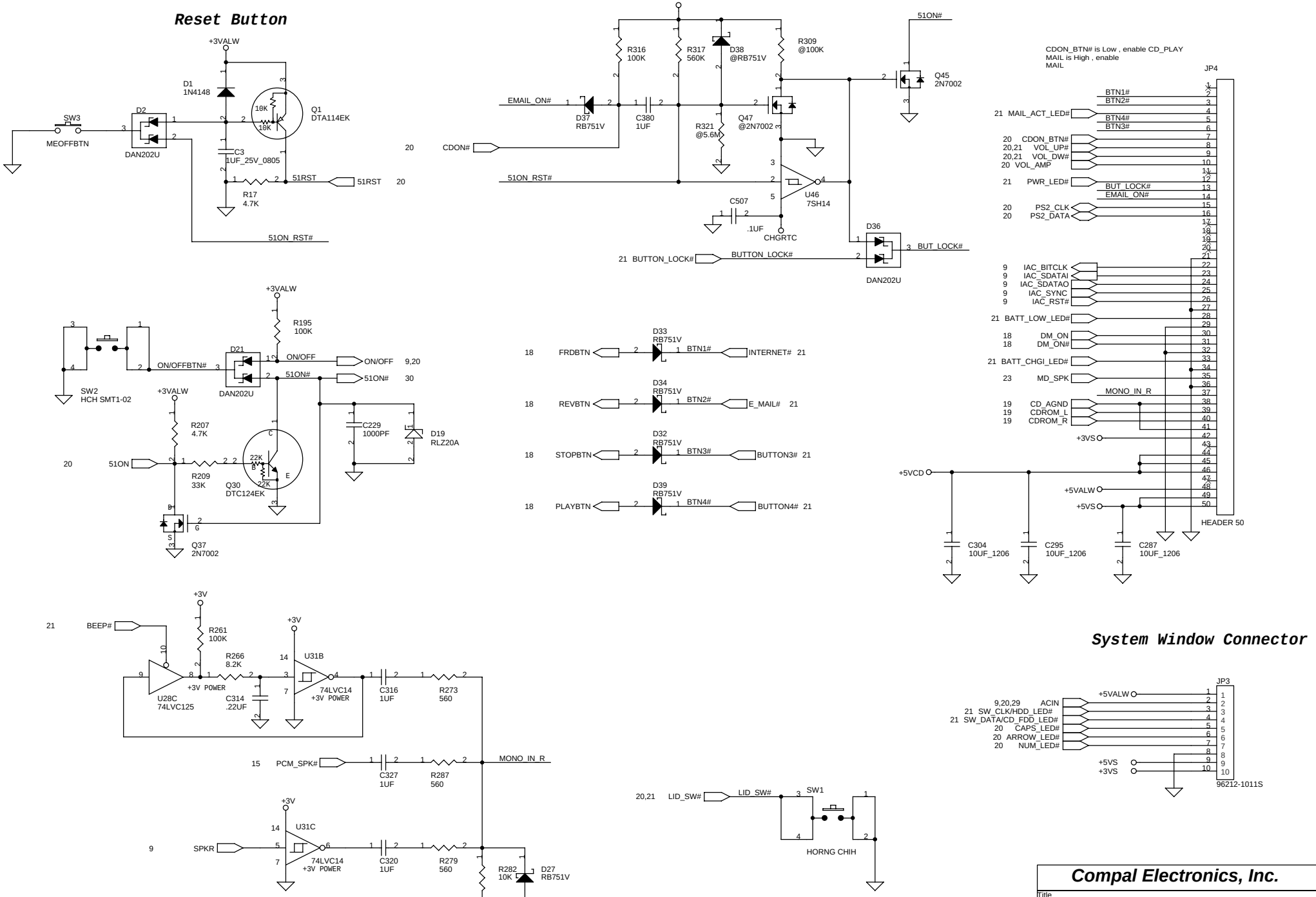

THIS SHEET OF ENGINEERING DRAWING IS THE PROPRIETARY PROPERTY OF COMPAL ELECTRONICS,INC. AND CONTAINS CONFIDENTIAL AND TRADE SECRET INFORMATION . THIS SHEET MAY NOT BE TRANSFERRED FROM THE CUSTODY OF THE COMPETENT DIVISION OF R&D DEPARTMENT EXCEPT AS AUTHORIZED BY COMPAL ELECTRONICS,INC. NEITHER THIS SHEET NOR THE INFORMATION CONTAINS MAY BE USED BY OR DISCLOSED TO ANY THIRD PARTY WITHOUT PRIOR WRITTEN CONSENT OF COMPAL ELECTRONICS,INC.

Compal Electronics, Inc.

Title	SCHEMATIC, M/B LA-1281
Size	B
Document Number	401202
Rev	1B
Date:	星期一, 十月 22, 2001
Sheet	26 of 34

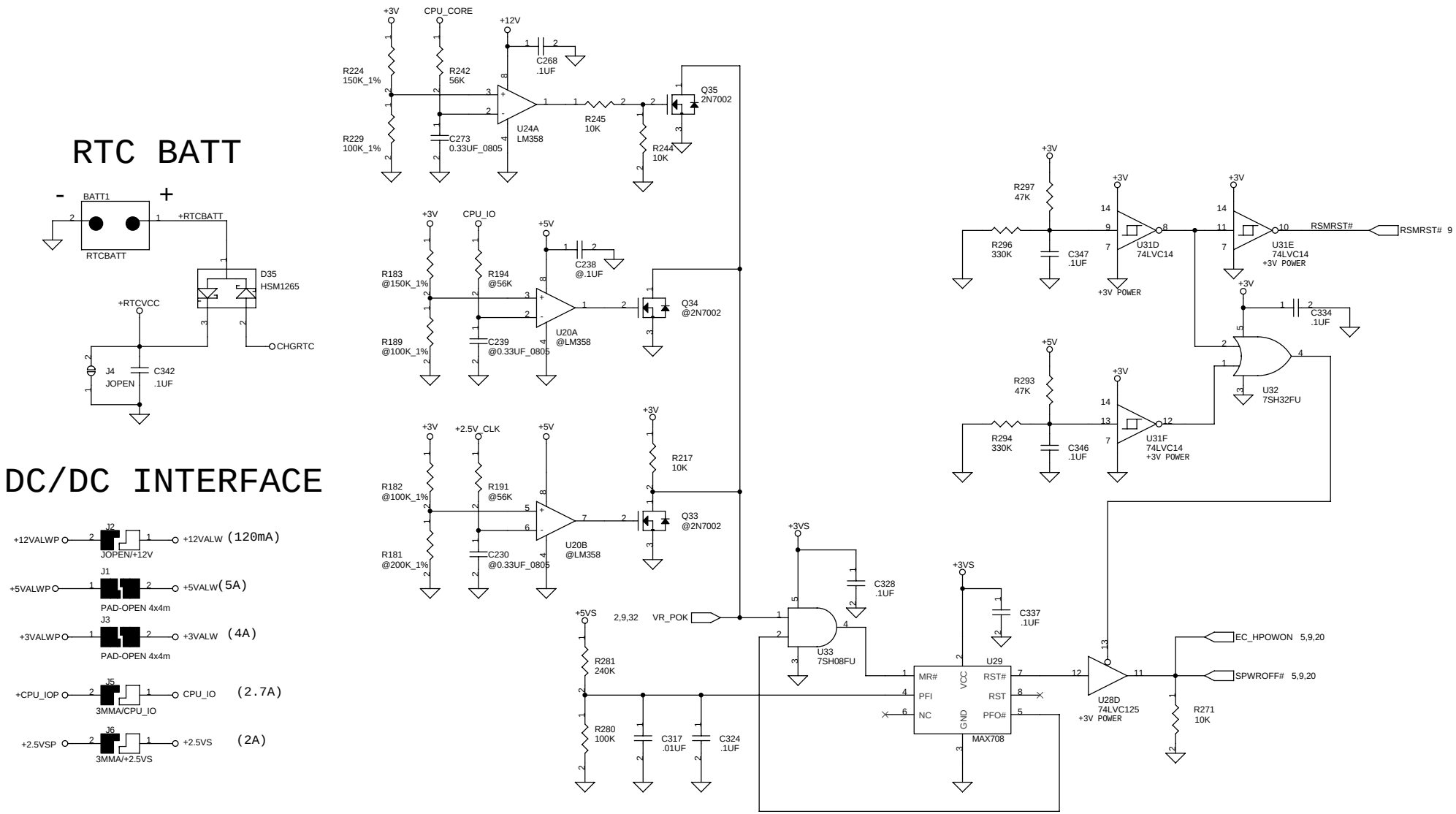

PROPRIETARY NOTE

THIS SHEET OF ENGINEERING DRAWING IS THE PROPRIETARY PROPERTY OF COMPAL ELECTRONICS, INC. AND CONTAINS CONFIDENTIAL AND TRADE SECRET INFORMATION. THIS SHEET MAY NOT BE TRANSFERRED FROM THE CUSTODY OF THE COMPETENT DIVISION OF R&D DEPARTMENT EXCEPT AS AUTHORIZED BY COMPAL ELECTRONICS, INC. NEITHER THIS SHEET NOR THE INFORMATION IT CONTAINS MAY BE USED BY OR DISCLOSED TO ANY THIRD PARTY WITHOUT PRIOR WRITTEN CONSENT OF COMPAL ELECTRONICS, INC.

Compal Electronics, Inc.

Title	SCHEMATIC, M/B LA-1281
Size B	Document Number 401202
Rev	1B
Date:	星期一, 十月 22, 2001
Sheet	27 of 34

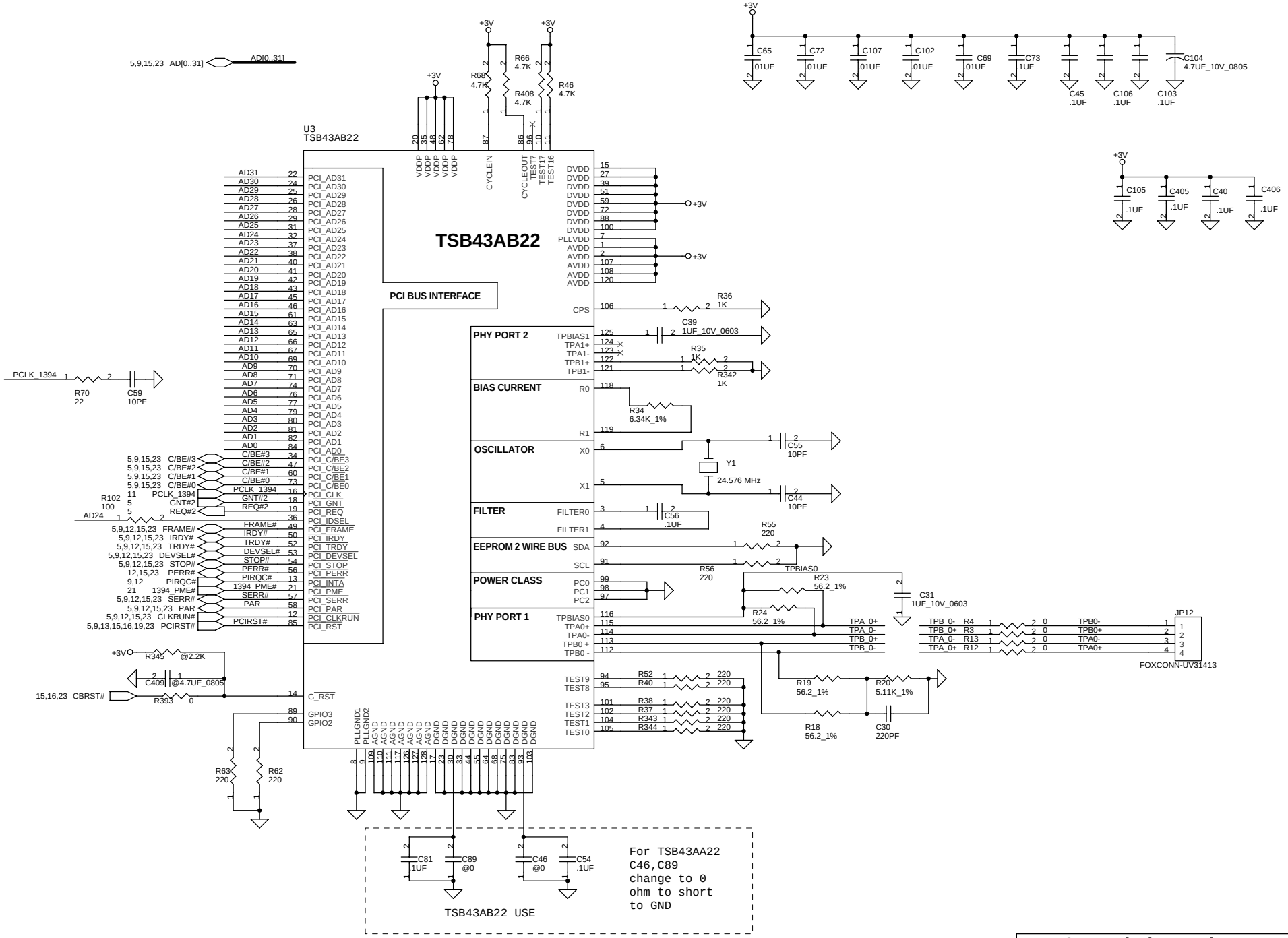

THIS SHEET OF ENGINEERING DRAWING IS THE PROPRIETARY PROPERTY OF COMPAL ELECTRONICS, INC. AND CONTAINS CONFIDENTIAL AND TRADE SECRET INFORMATION. THIS SHEET MAY NOT BE TRANSFERRED FROM THE CUSTODY OF THE COMPETENT DIVISION OF R&D DEPARTMENT EXCEPT AS AUTHORIZED BY COMPAL ELECTRONICS, INC. NEITHER THIS SHEET NOR THE INFORMATION IT CONTAINS MAY BE USED BY OR DISCLOSED TO ANY THIRD PARTY WITHOUT PRIOR WRITTEN CONSENT OF COMPAL ELECTRONICS, INC.

Compal Electronics, Inc.

Title: SCHEMATIC, M/B LA-1281

Size: B | Document Number: 401202 | Rev: 1B

Date: 星期一, 十月 22, 2001 | Sheet 28 of 34

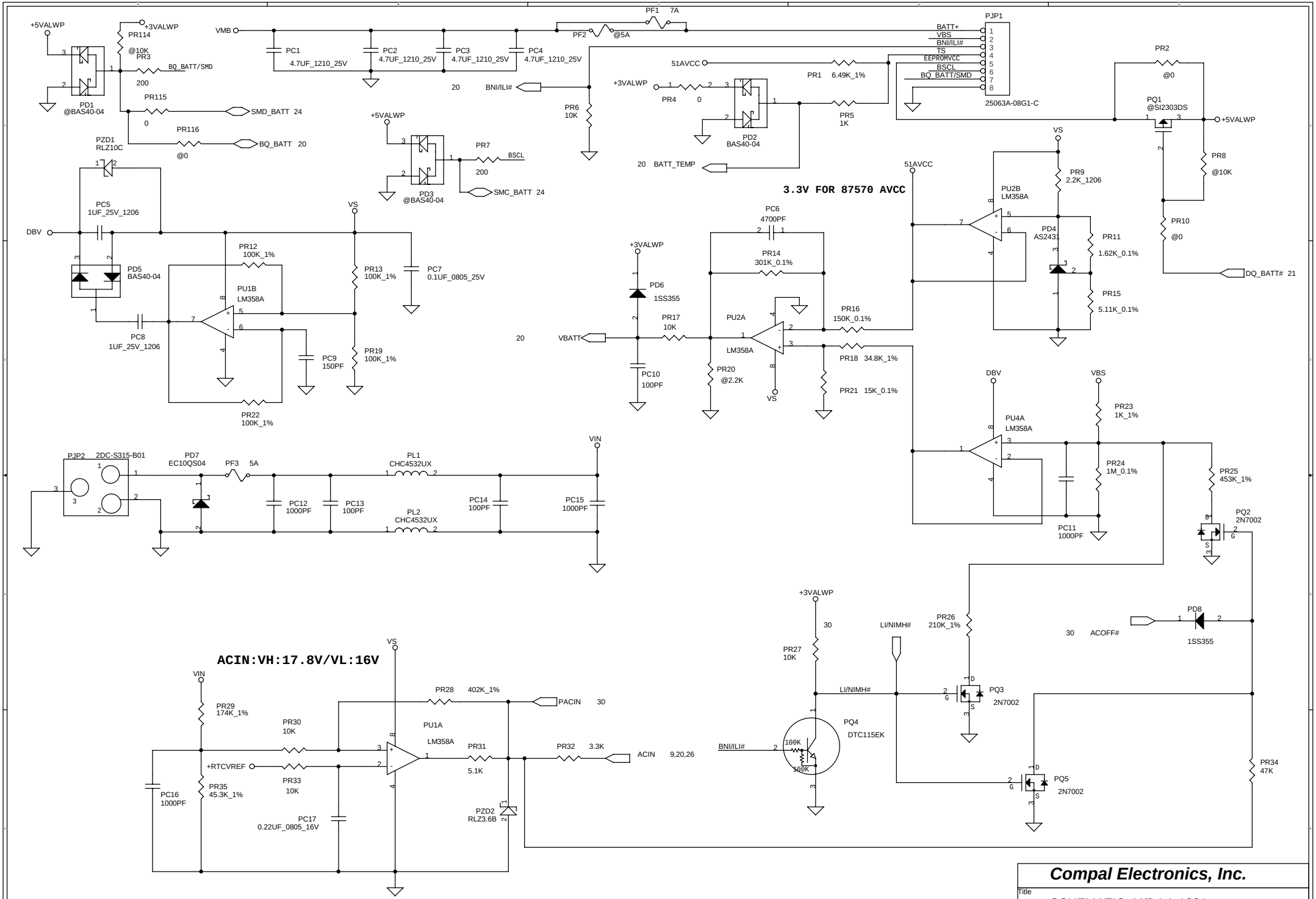

THIS SHEET OF ENGINEERING DRAWING IS THE PROPRIETARY PROPERTY OF COMPAL ELECTRONICS,INC. AND CONTAINS CONFIDENTIAL AND TRADE SECRET INFORMATION . THIS SHEET MAY NOT BE TRANSFERRED FROM THE CUSTODY OF THE COMPETENT DIVISION OF R&D DEPARTMENT EXCEPT AS AUTHORIZED BY COMPAL ELECTRONICS,INC. NEITHER THIS SHEET NOR THE INFORMATION CONTAINS MAY BE USED BY OR DISCLOSED TO ANY THIRD PARTY WITHOUT PRIOR WRITTEN CONSENT OF COMPAL ELECTRONICS,INC.

Compal Electronics, Inc.

Title	SCHEMATIC, M/B LA-1281	
Size B	Document Number 401202	Rev 1B
Date: 星期一, 十月 22, 2001	Sheet 29 of 34	

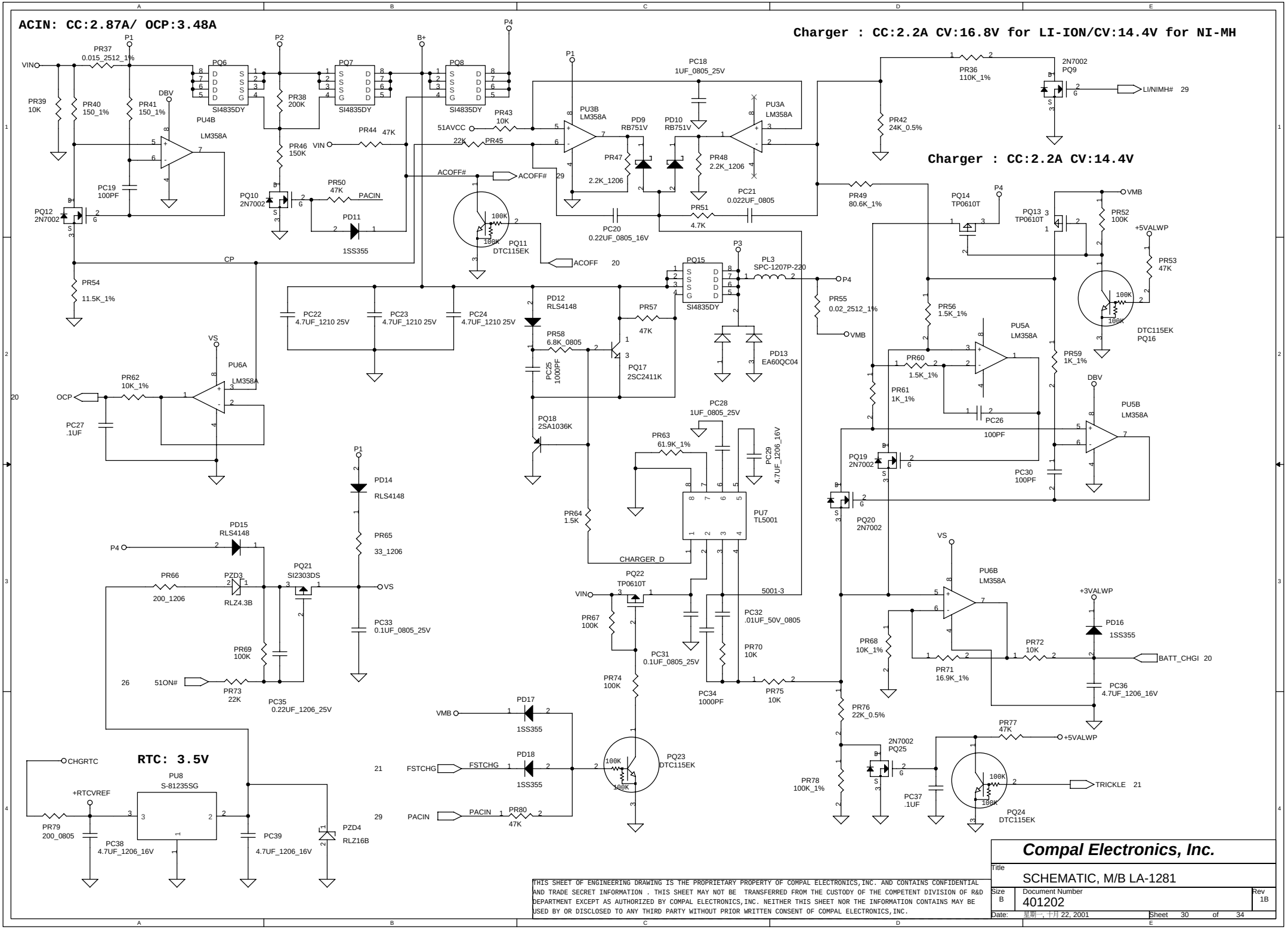
ACIN: CC:2.87A/ OCP:3.48A
Charger : CC:2.2A CV:16.8V for LI-ION/CV:14.4V for NI-MH
Charger : CC:2.2A CV:14.4V
RTC: 3.5V
VIN
PR37 0.015_2512_1%
PR39 10K
PR40 150_1%
PR41 150_1%
PR38 200K
PR46 150K
PR44 47K
PR43 10K
PR45 22K
PR50 47K
PR54 11.5K_1%
PR62 10K_1%
PR36 110K_1%
PR42 24K_0.5%
PR49 80.6K_1%
PR51 4.7K
PR52 100K
PR53 47K
PR55 0.02_2512_1%
PR56 1.5K_1%
PR57 47K
PR58 6.8K_0805
PR59 1K_1%
PR60 1.5K_1%
PR61 1K_1%
PR63 61.9K_1%
PR64 1.5K
PR65 33_1206
PR66 200_1206
PR67 100K
PR68 10K_1%
PR69 100K
PR70 10K
PR71 16.9K_1%
PR72 10K
PR73 22K
PR74 100K
PR75 10K
PR76 22K_0.5%
PR77 47K
PR78 100K_1%
PR79 200_0805
PR80 47K
PC18 1UF_0805_25V
PC19 100PF
PC20 0.22UF_0805_16V
PC21 0.022UF_0805
PC22 4.7UF_1210 25V
PC23 4.7UF_1210 25V
PC24 4.7UF_1210 25V
PC25 1000PF
PC26 100PF
PC27 .1UF
PC28 1UF_0805_25V
PC29 4.7UF_1206_16V
PC30 100PF
PC31 0.1UF_0805_25V
PC32 .01UF_50V_0805
PC33 0.1UF_0805_25V
PC34 1000PF
PC35 0.22UF_1206_25V
PC36 4.7UF_1206_16V
PC37 .1UF
PC38 4.7UF_1206_16V
PC39 4.7UF_1206_16V
PU3A LM358A
PU3B LM358A
PU4B LM358A
PU5A LM358A
PU5B LM358A
PU6A LM358A
PU6B LM358A
PU7 TL5001
PU8 S-81235SG
PQ6 SI4835DY
PQ7 SI4835DY
PQ8 SI4835DY
PQ9 2N7002
PQ10 2N7002
PQ11 DTC115EK
PQ12 2N7002
PQ13 TP0610T
PQ14 TP0610T
PQ15 SI4835DY
PQ16 DTC115EK
PQ17 2SC2411K
PQ18 2SA1036K
PQ19 2N7002
PQ20 2N7002
PQ21 SI2303DS
PQ22 TP0610T
PQ23 DTC115EK
PQ24 DTC115EK
PQ25 2N7002
PD9 RB751V
PD10 RB751V
PD11 1SS355
PD12 RLS4148
PD13 EA60QC04
PD14 RLS4148
PD15 RLS4148
PD16 1SS355
PD17 1SS355
PD18 1SS355
PZD3 RLZ4.3B
PZD4 RLZ16B
PL3 SPC-1207P-220
PR47 2.2K_1206
PR48 2.2K_1206
PC11 DTC115EK
100K
ACOFF#
ACOFF
PACIN
CP
OCP
VS
VMB
+5VALWP
+3VALWP
+RTCVREF
CHGRTC
51AVCC
51ON#
FSTCHG
CHARGER_D
5001-3
LI/NIMH#
BATT_CHGI
TRICKLE
DBV
P1
P2
P3
P4
B+
Compal Electronics, Inc.
Title
SCHEMATIC, M/B LA-1281
Size B
Document Number
401202
Rev 1B
Date: 星期一, 十月 22, 2001
Sheet 30 of 34
THIS SHEET OF ENGINEERING DRAWING IS THE PROPRIETARY PROPERTY OF COMPAL ELECTRONICS,INC. AND CONTAINS CONFIDENTIAL AND TRADE SECRET INFORMATION . THIS SHEET MAY NOT BE TRANSFERRED FROM THE CUSTODY OF THE COMPETENT DIVISION OF R&D DEPARTMENT EXCEPT AS AUTHORIZED BY COMPAL ELECTRONICS,INC. NEITHER THIS SHEET NOR THE INFORMATION CONTAINS MAY BE USED BY OR DISCLOSED TO ANY THIRD PARTY WITHOUT PRIOR WRITTEN CONSENT OF COMPAL ELECTRONICS,INC.

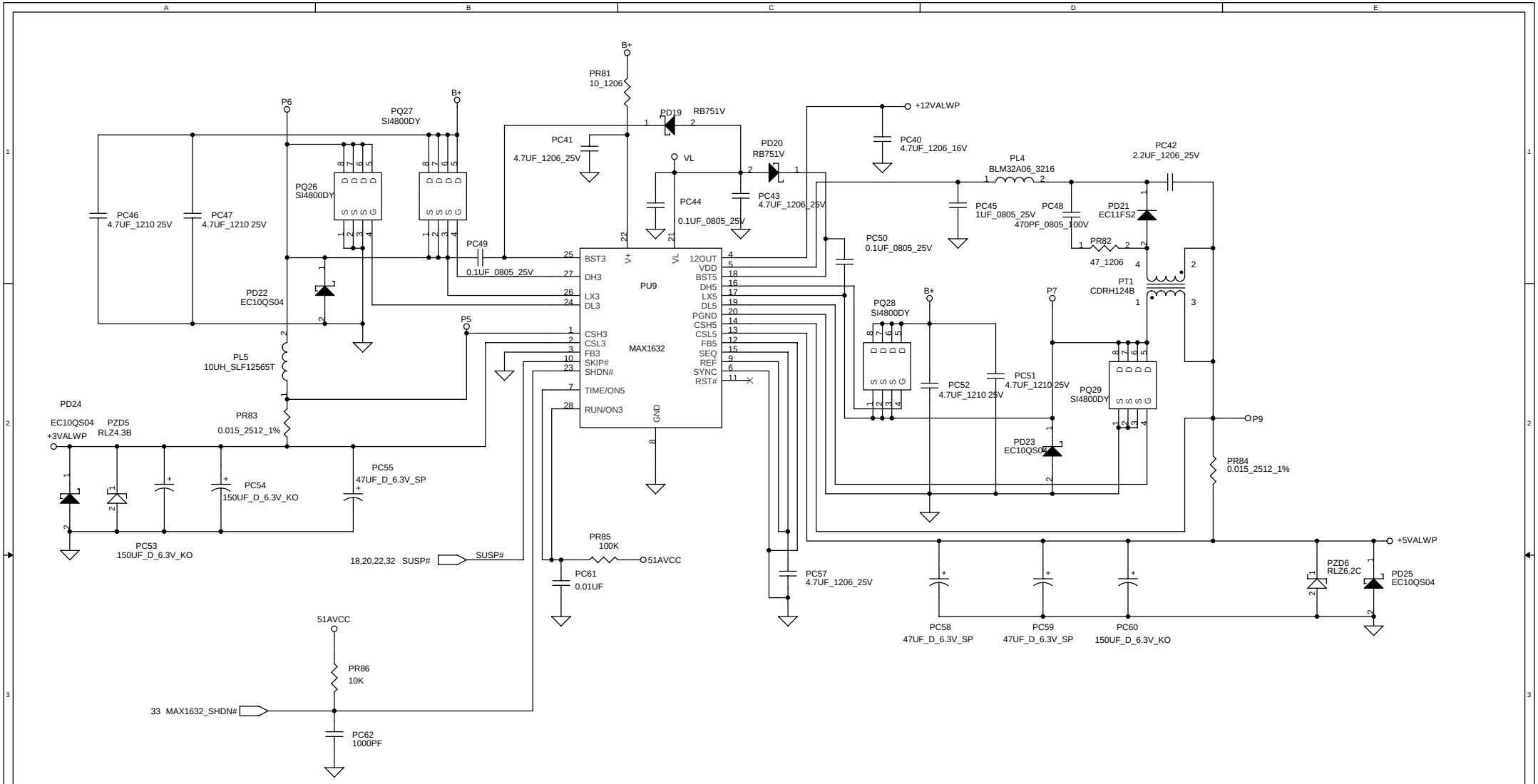

THIS SHEET OF ENGINEERING DRAWING IS THE PROPRIETARY PROPERTY OF COMPAL ELECTRONICS,INC. AND CONTAINS CONFIDENTIAL AND TRADE SECRET INFORMATION . THIS SHEET MAY NOT BE TRANSFERRED FROM THE CUSTODY OF THE COMPETENT DIVISION OF R&D DEPARTMENT EXCEPT AS AUTHORIZED BY COMPAL ELECTRONICS,INC. NEITHER THIS SHEET NOR THE INFORMATION CONTAINS MAY BE USED BY OR DISCLOSED TO ANY THIRD PARTY WITHOUT PRIOR WRITTEN CONSENT OF COMPAL ELECTRONICS,INC.

Compal Electronics, Inc.

Title: SCHEMATIC, M/B LA-1281

Size: B | Document Number: 401202 | Rev: 1B

Date: 星期一, 十月 22, 2001 | Sheet 31 of 34

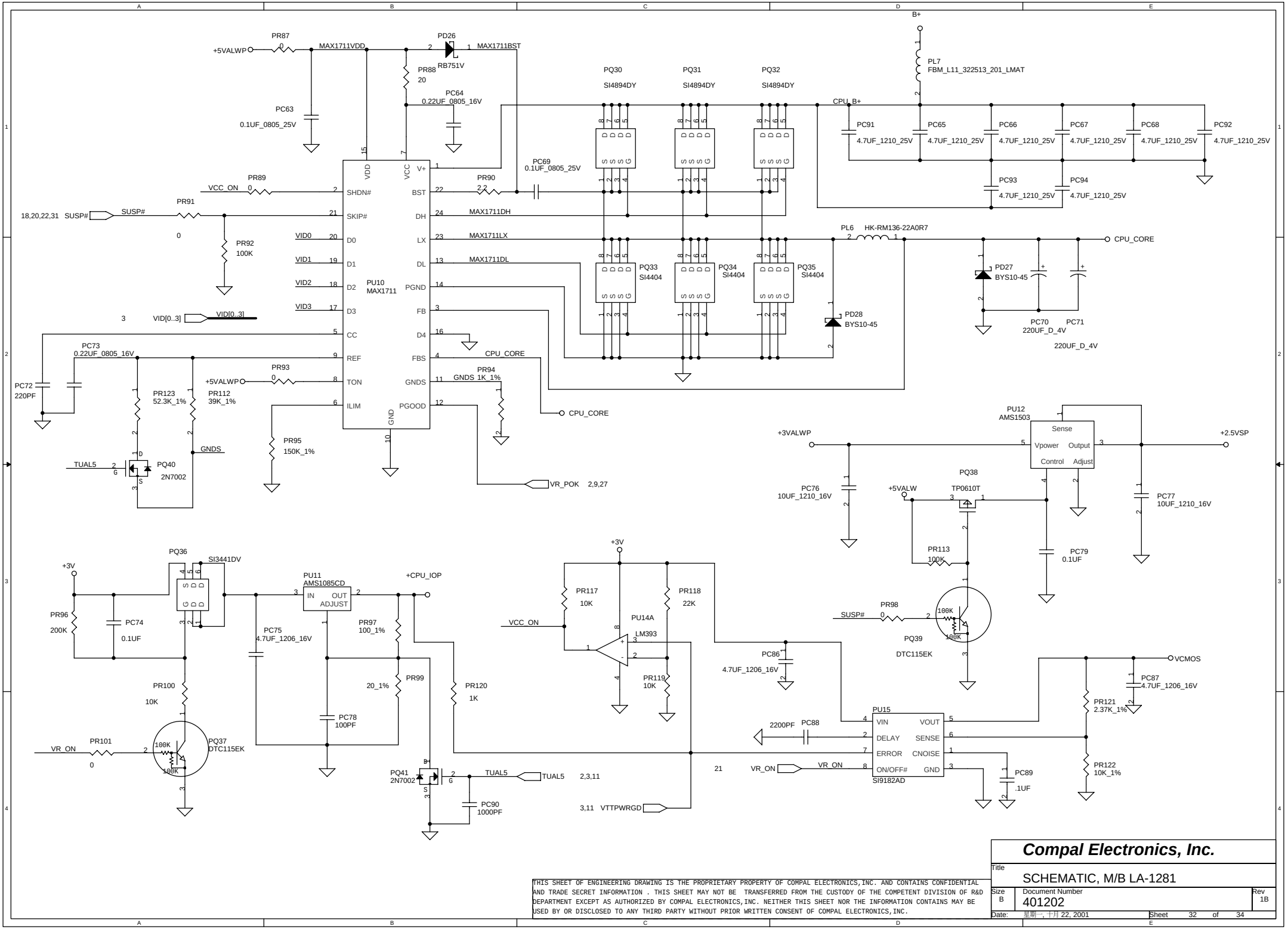

THIS SHEET OF ENGINEERING DRAWING IS THE PROPRIETARY PROPERTY OF COMPAL ELECTRONICS,INC. AND CONTAINS CONFIDENTIAL AND TRADE SECRET INFORMATION . THIS SHEET MAY NOT BE TRANSFERRED FROM THE CUSTODY OF THE COMPETENT DIVISION OF R&D DEPARTMENT EXCEPT AS AUTHORIZED BY COMPAL ELECTRONICS,INC. NEITHER THIS SHEET NOR THE INFORMATION CONTAINS MAY BE USED BY OR DISCLOSED TO ANY THIRD PARTY WITHOUT PRIOR WRITTEN CONSENT OF COMPAL ELECTRONICS,INC.

Compal Electronics, Inc.

Title	SCHEMATIC, M/B LA-1281
Size B	Document Number 401202
Rev	1B
Date:	星期一, 十月 22, 2001
Sheet	32 of 34

For CPU thermal protection 90/60 度C

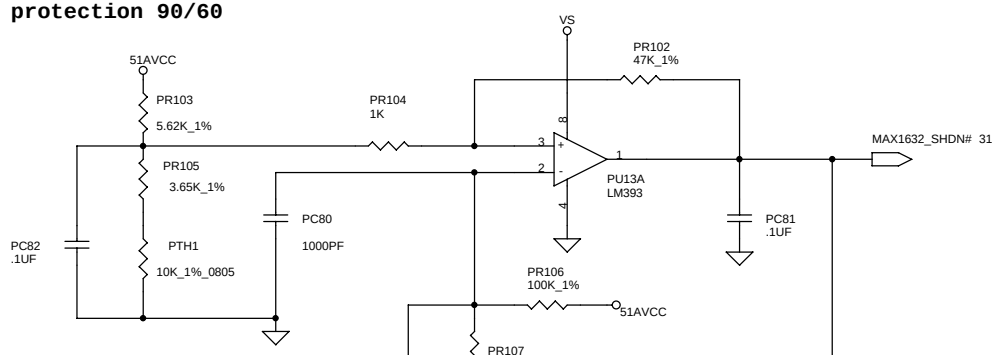

For Battery thermal protection 83/54 度C

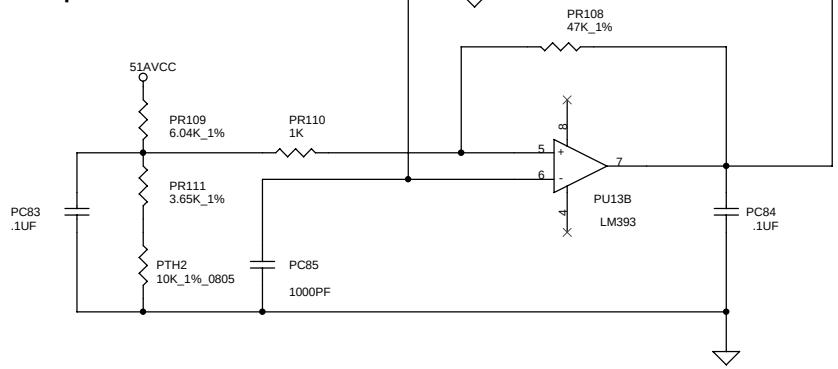

THIS SHEET OF ENGINEERING DRAWING IS THE PROPRIETARY PROPERTY OF COMPAL ELECTRONICS,INC. AND CONTAINS CONFIDENTIAL AND TRADE SECRET INFORMATION . THIS SHEET MAY NOT BE TRANSFERRED FROM THE CUSTODY OF THE COMPETENT DIVISION OF R&D DEPARTMENT EXCEPT AS AUTHORIZED BY COMPAL ELECTRONICS,INC. NEITHER THIS SHEET NOR THE INFORMATION CONTAINS MAY BE USED BY OR DISCLOSED TO ANY THIRD PARTY WITHOUT PRIOR WRITTEN CONSENT OF COMPAL ELECTRONICS,INC.

Compal Electronics, Inc.

Title	SCHEMATIC, M/B LA-1281	
Size B	Document Number 401202	Rev 1B
Date: 星期一, 十月 22, 2001	Sheet 33 of 34	

CY23 PIR LIST

08/28/01 Written by Jerry

P11: Add Q61 and R407 for VTTPWRGD

********** Rev1.0 PIR List **********

09/10/01 Written by Jerry

P26: Add @ at R309 and Q47
    Add C507 and U46
    Change value of R317 to 510K
P27: Remove @ at R224, R229, R242, R245, R244, C273, and Q35
P32: Add PC91, PC92, PC93, and PC94.

09/12/01 Written by Jerry

P06: Change value of RP34, RP50, RP54, RP62, RP38, RP33, RP57,
RP61,RP53, and RP56 to 16P8R-22
P26: Change value of R317 to 560K

09/19/01 Written by Jerry

P29: Change value of PR29 to 174K_1%
P32: Change value of PR123 to 52.3K_1%

********** Rev2.0 PIR List **********

10/03/01 Written by Jerry

P02: Change value of R27 to 180
    Delete R395
    R395's Pin 1 tie to RP98's pin5
P03: Change value of R353 to 56.2 1%
P28: Add R408 between +3V and pin 87 of U3

10/08/01 Written by Jerry

P11, P13, P28: Change footprint of Y1, Y2, and Y3
P23: Change footprint of JP11
P28: Change footprint of JP12
P31: Change footprint of PL5
P26: Change footprint of SW1

10/17/01 Written by Jerry

P02: Add @ at RP25, RP24, RP28, RP27, RP31, RP30, RP 42, RP41,
RP40, RP43, RP44, RP45, RP46, RP47, RP48, RP49, RP7, RP1, RP6,
RP14, RP20, RP19, RP22, RP9, RP10, RP11, RP8, RP2, and R7
P06: Remove @ at R164
P11: Add @ at R176

PROPRIETARY NOTE THIS SHEET OF ENGINEERING DRAWING IS THE PROPRIETARY PROPERTY OF COMPAL ELECTRONICS, INC. AND CONTAINS CONFIDENTIAL AND TRADE SECRET INFORMATION. THIS SHEET MAY NOT BE TRANSFERRED FROM THE CUSTODY OF THE COMPETENT DIVISION OF R&D DEPARTMENT EXCEPT AS AUTHORIZED BY COMPAL ELECTRONICS, INC. NEITHER THIS SHEET NOR THE INFORMATION IT CONTAINS MAY BE USED BY OR DISCLOSED TO ANY THIRD PARTY WITHOUT PRIOR WRITTEN CONSENT OF COMPAL ELECTRONICS, INC.