Compal Confidential

Schematics Document

945GM+ICH7

2006 / 08 / 18 Rev:0.4

Security Classification	Compal Secret Data		
Issued Date	2005/12/1	Deciphered Date	2006/12/01

THIS SHEET OF ENGINEERING DRAWING IS THE PROPRIETARY PROPERTY OF COMPAL ELECTRONICS, INC. AND CONTAINS CONFIDENTIAL AND TRADE SECRET INFORMATION. THIS SHEET MAY NOT BE TRANSFERED FROM THE CUSTODY OF THE COMPETENT DIVISION OF R&D DEPARTMENT EXCEPT AS AUTHORIZED BY COMPAL ELECTRONICS, INC. NEITHER THIS SHEET NOR THE INFORMATION IT CONTAINS MAY BE USED BY OR DISCLOSED TO ANY THIRD PARTY WITHOUT PRIOR WRITTEN CONSENT OF COMPAL ELECTRONICS, INC.

Title	Cover Sheet	
Size: Custom	Document Number: LA-3271P	Rev: 0.4
Date: Monday, August 21, 2006	Sheet 1 of 42	

Compal confidential

Project Code: ANRIAL3000(IAL30)

File Name : LA-3271P

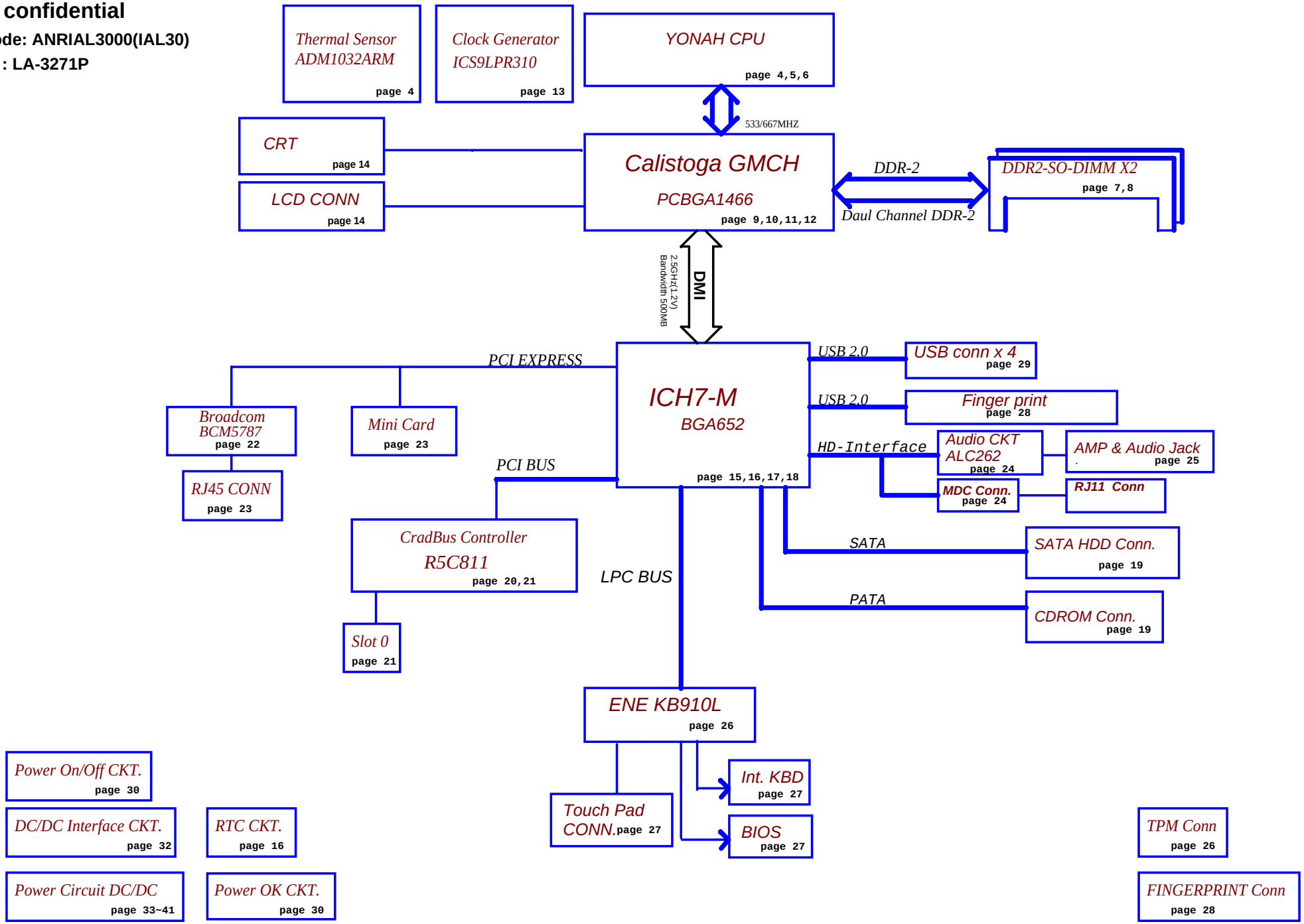

Security Classification	Compal Secret Data		
Issued Date	2005/12/1	Deciphered Date	2006/12/01

THIS SHEET OF ENGINEERING DRAWING IS THE PROPRIETARY PROPERTY OF COMPAL ELECTRONICS, INC. AND CONTAINS CONFIDENTIAL AND TRADE SECRET INFORMATION. THIS SHEET MAY NOT BE TRANSFERED FROM THE CUSTODY OF THE COMPETENT DIVISION OF R&D DEPARTMENT EXCEPT AS AUTHORIZED BY COMPAL ELECTRONICS, INC. NEITHER THIS SHEET NOR THE INFORMATION IT CONTAINS MAY BE USED BY OR DISCLOSED TO ANY THIRD PARTY WITHOUT PRIOR WRITTEN CONSENT OF COMPAL ELECTRONICS, INC.

Title	Block Diagrams		
Size: Custom	Document Number: LA-3271P		Rev: 0.4
Date: Monday, August 21, 2006	Sheet 2 of 42		

Voltage Rails

Power Plane	Description	S1	S3	S4/ S5
VIN	Adapter power supply (19V)	ON	ON	ON
B+	AC or battery power rail for power circuit.	ON	ON	ON
+5VALW	5V always on power rail	ON	ON	ON
+3VALW	3.3V always on power rail	ON	ON	ON
+RTCVCC	RTC power	ON	ON	ON
+5V	5V power rail	ON	ON	OFF
+3V	3.3V power rail	ON	ON	OFF
+1.8V	1.8V power rail for DDR	ON	ON	OFF
+5VS	5V switched power rail	ON	OFF	OFF
+3VS	3.3V switched power rail	ON	OFF	OFF
+2.5VS	2.5V switched power rail	ON	OFF	OFF
+1.5VS	1.5V switched power rail	ON	OFF	OFF
+0.9VS	0.9V switched power rail for DDR terminator	ON	OFF	OFF
+CPU_CORE	Core voltage for CPU	ON	OFF	OFF
+VCCP	1.05V power rail	ON	OFF	OFF

STATE \ SIGNAL	SLP_S1#	SLP_S3#	SLP_S4#	SLP_S5#	+VALW	+V	+VS	Clock
Full ON	HIGH	HIGH	HIGH	HIGH	ON	ON	ON	ON
S1(Power On Suspend)	LOW	HIGH	HIGH	HIGH	ON	ON	ON	LOW
S3 (Suspend to RAM)	LOW	LOW	HIGH	HIGH	ON	ON	OFF	OFF
S4 (Suspend to Disk)	LOW	LOW	LOW	HIGH	ON	OFF	OFF	OFF
S5 (Soft OFF)	LOW	LOW	LOW	LOW	ON	OFF	OFF	OFF

Board ID Table for AD channel

Vcc	3.3V +/- 5%
Ra / Rc	100K +/- 5%

Board ID	Rb / Rd	V_{AD_BID} min	V_{AD_BID} typ	V_{AD_BID} max
0	0	0 V	0 V	0 V
1	8.2K +/- 5%	0.216 V	0.250 V	0.289 V
2	18K +/- 5%	0.436 V	0.503 V	0.538 V
3	33K +/- 5%	0.712 V	0.819 V	0.875 V
4	56K +/- 5%	1.036 V	1.185 V	1.264 V
5	100K +/- 5%	1.453 V	1.650 V	1.759 V
6	200K +/- 5%	1.935 V	2.200 V	2.341 V
7	NC	2.500 V	3.300 V	3.300 V

External PCI Devices

Device	IDSEL#	REQ#/GNT#	Interrupts
CardBus	AD21	0	PIRQE/PIRQF/PIRQG
Mini-PCI	AD22	1	PIRQF/PIRQG

BOARD ID Table

Board ID	PCB Revision
0	0.1
1	0.2
2	
3	
4	
5	
6	
7	

BTO Option Table

BTO Item	BOM Structure

EC SM Bus1 address

Device	Address
Smart Battery	0001 011X b?
EEPROM(24C16/02)	1010 000X b?
(24C04)	1011 000Xb?

EC SM Bus2 address

Device	Address
ADM1032	1001 110X b?

ICH7 SM Bus address

Device	Address
Clock Generator (ICS ICS9LPR310)	1101 001Xb?
DDRII DIMM0	1001 000Xb?
DDRII DIMM2	1001 010Xb?

THIS SHEET OF ENGINEERING DRAWING IS THE PROPRIETARY PROPERTY OF COMPAL ELECTRONICS, INC. AND CONTAINS CONFIDENTIAL AND TRADE SECRET INFORMATION. THIS SHEET MAY NOT BE TRANSFERED FROM THE CUSTODY OF THE COMPETENT DIVISION OF R&D DEPARTMENT EXCEPT AS AUTHORIZED BY COMPAL ELECTRONICS, INC. NEITHER THIS SHEET NOR THE INFORMATION IT CONTAINS MAY BE USED BY OR DISCLOSED TO ANY THIRD PARTY WITHOUT PRIOR WRITTEN CONSENT OF COMPAL ELECTRONICS, INC.

Security Classification	Compal Secret Data		
Issued Date	2005/12/1	Deciphered Date	2006/12/01

Title: Notes

Size: Custom | Document Number: LA-3271P | Rev: 0.4

Date: Monday, August 21, 2006 | Sheet 3 of 42

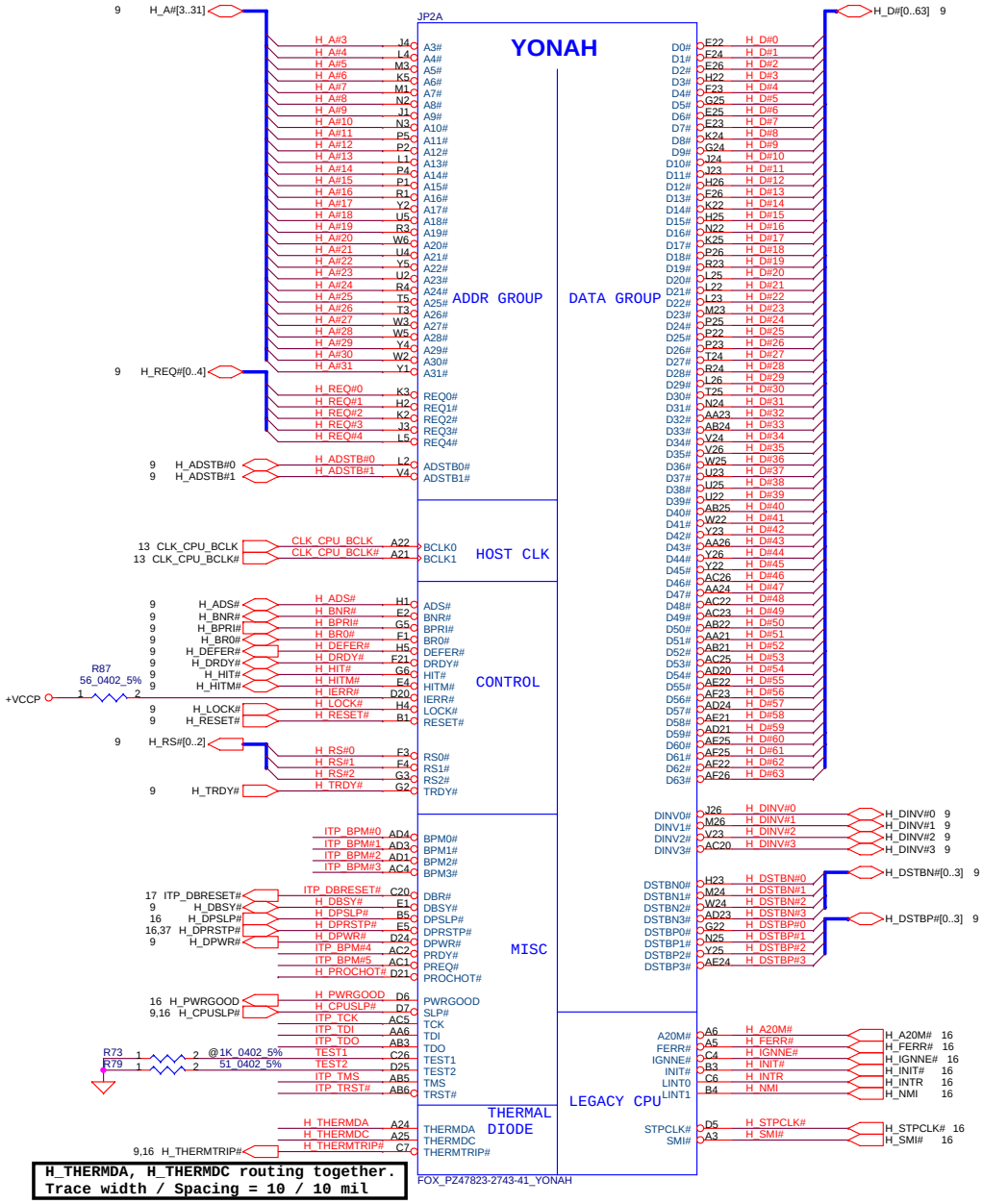

H_THERMDA, H_THERMDC routing together.
Trace width / Spacing = 10 / 10 mil

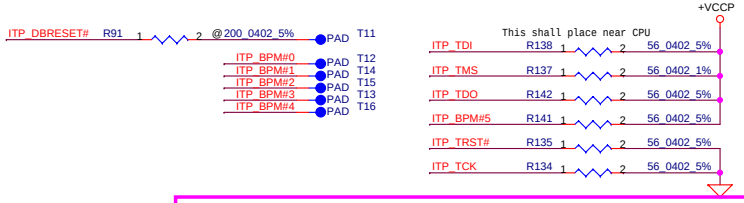

Thermal Sensor ADM1032

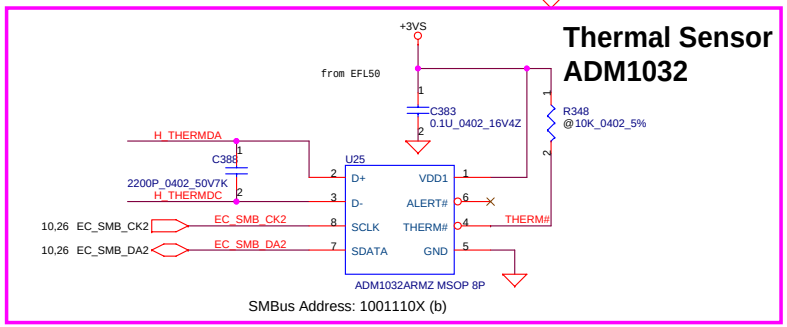

SMBus Address: 1001110X (b)

KH3-ORG. FAN1 Control and Tachometer

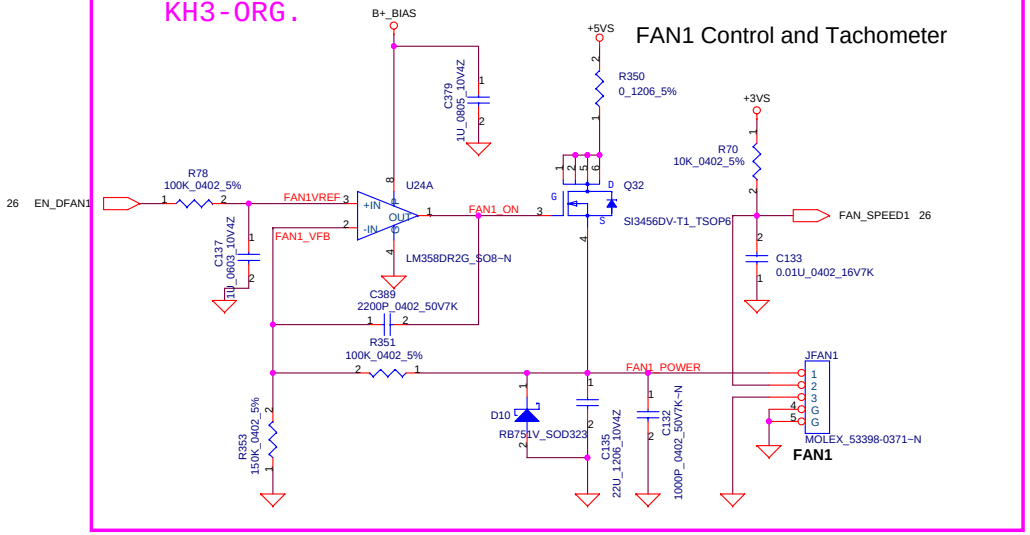

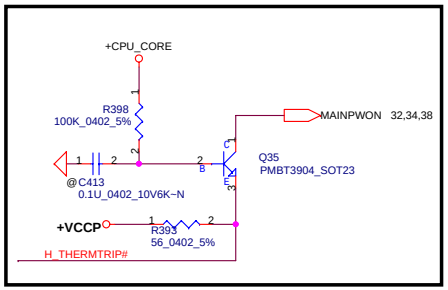

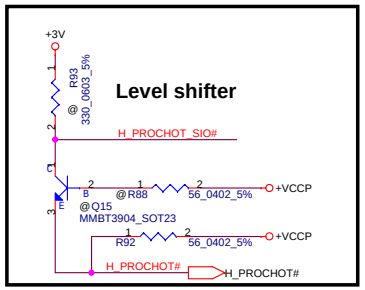

Security Classification	Compal Secret Data		
Issued Date	2005/12/1	Deciphered Date	2006/12/01

THIS SHEET OF ENGINEERING DRAWING IS THE PROPRIETARY PROPERTY OF COMPAL ELECTRONICS, INC. AND CONTAINS CONFIDENTIAL AND TRADE SECRET INFORMATION. THIS SHEET MAY NOT BE TRANSFERRED FROM THE CUSTODY OF THE COMPETENT DIVISION OF R&D DEPARTMENT EXCEPT AS AUTHORIZED BY COMPAL ELECTRONICS, INC. NEITHER THIS SHEET NOR THE INFORMATION IT CONTAINS MAY BE USED BY OR DISCLOSED TO ANY THIRD PARTY WITHOUT PRIOR WRITTEN CONSENT OF COMPAL ELECTRONICS, INC.

Compal Electronics, Inc.

Title: YONAH

Size: Custom | Document Number: LA-3271P | Rev: 0.4

Date: Monday, August 21, 2006 | Sheet 4 of 42

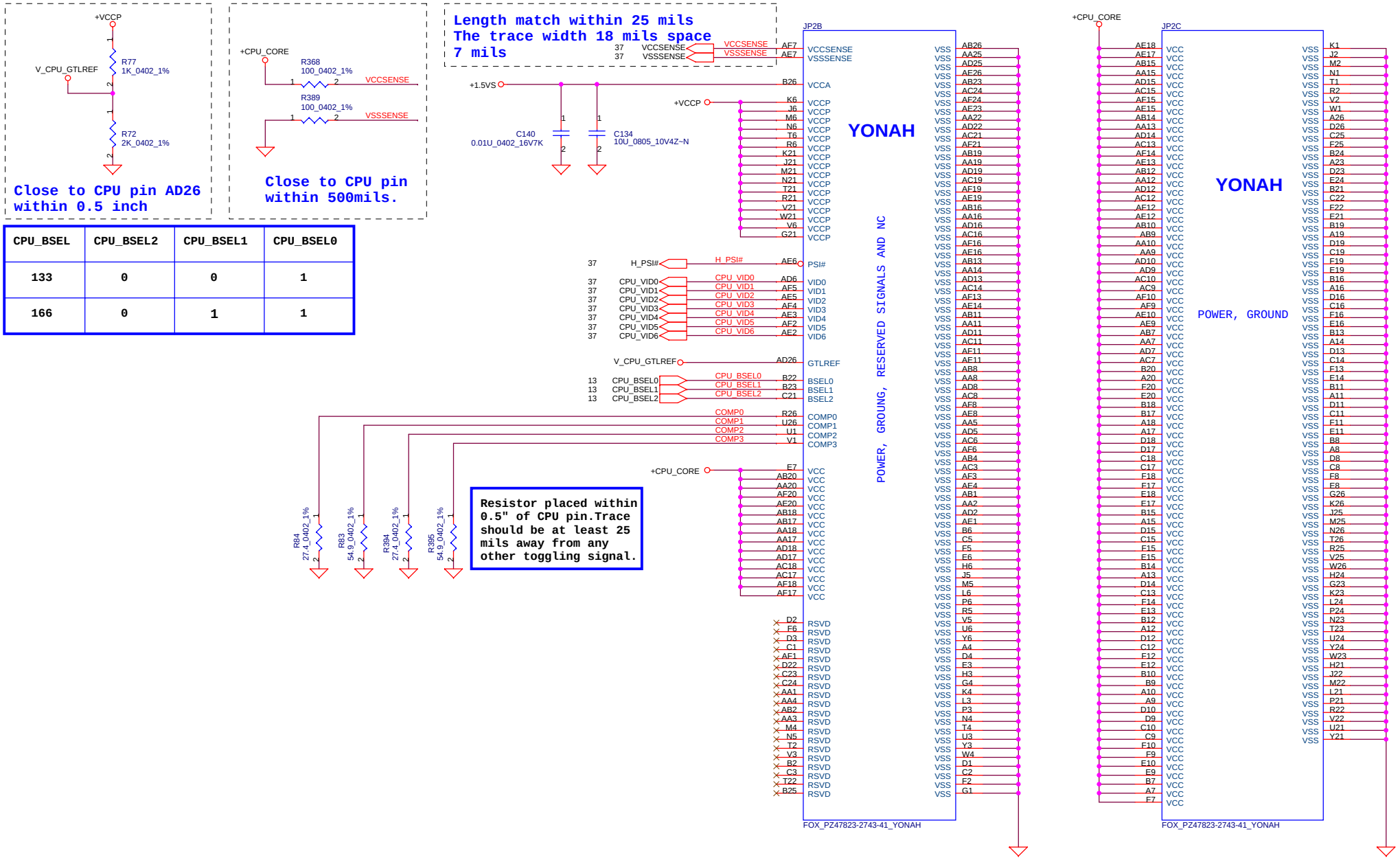

CPU_BSEL	CPU_BSEL2	CPU_BSEL1	CPU_BSEL0
133	0	0	1
166	0	1	1

Security Classification	Compal Secret Data		
Issued Date	2005/12/1	Deciphered Date	2006/12/01

THIS SHEET OF ENGINEERING DRAWING IS THE PROPRIETARY PROPERTY OF COMPAL ELECTRONICS, INC. AND CONTAINS CONFIDENTIAL AND TRADE SECRET INFORMATION. THIS SHEET MAY NOT BE TRANSFERED FROM THE CUSTODY OF THE COMPETENT DIVISION OF R&D DEPARTMENT EXCEPT AS AUTHORIZED BY COMPAL ELECTRONICS, INC. NEITHER THIS SHEET NOR THE INFORMATION IT CONTAINS MAY BE USED BY OR DISCLOSED TO ANY THIRD PARTY WITHOUT PRIOR WRITTEN CONSENT OF COMPAL ELECTRONICS, INC.

Title: AMD CPU DDRII MEMORY I/F

Size: Custom | Document Number: LA-3271P | Rev: 0.4

Date: Monday, August 21, 2006 | Sheet 5 of 42

Mid Frequence Decoupling

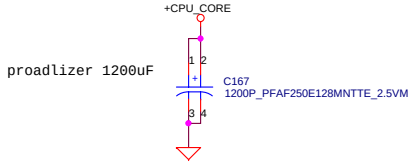

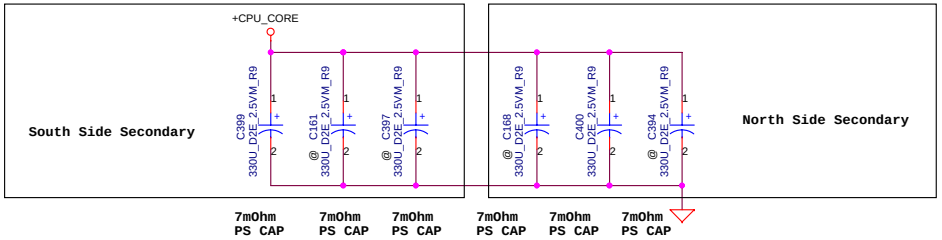

ESR <= 1.5m ohm
Capacitor > 1980uF

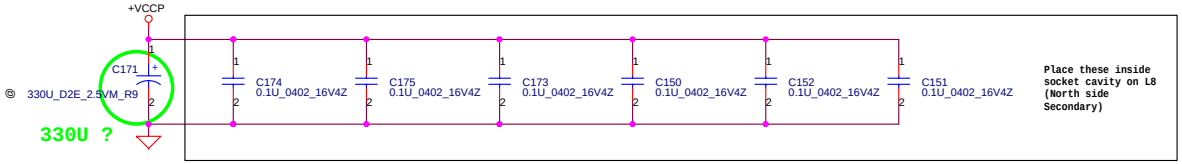

Security Classification	Compal Secret Data		
Issued Date	2005/12/1	Deciphered Date	2006/12/01

THIS SHEET OF ENGINEERING DRAWING IS THE PROPRIETARY PROPERTY OF COMPAL ELECTRONICS, INC. AND CONTAINS CONFIDENTIAL AND TRADE SECRET INFORMATION. THIS SHEET MAY NOT BE TRANSFERED FROM THE CUSTODY OF THE COMPETENT DIVISION OF R&D DEPARTMENT EXCEPT AS AUTHORIZED BY COMPAL ELECTRONICS, INC. NEITHER THIS SHEET NOR THE INFORMATION IT CONTAINS MAY BE USED BY OR DISCLOSED TO ANY THIRD PARTY WITHOUT PRIOR WRITTEN CONSENT OF COMPAL ELECTRONICS, INC.

Compal Electronics, Inc.

Title: **ATHLON64 CTRL & DEBUG**

Size: Custom | Document Number: **LA-3271P** | Rev: 0.4

Date: Monday, August 21, 2006 | Sheet 6 of 42

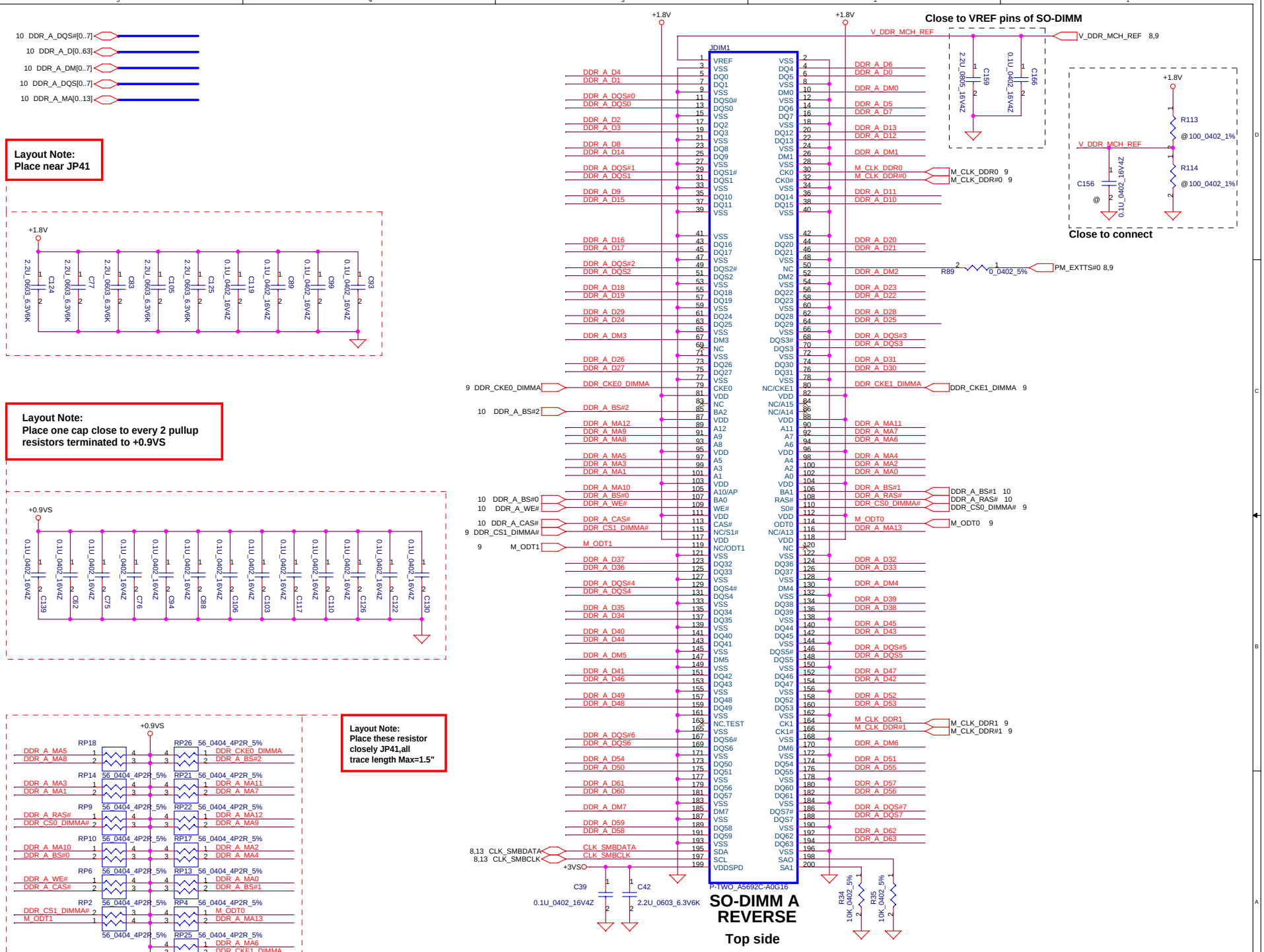

Security Classification	Compal Secret Data		
Issued Date	2005/12/1	Deciphered Date	2006/12/01

THIS SHEET OF ENGINEERING DRAWING IS THE PROPRIETARY PROPERTY OF COMPAL ELECTRONICS, INC. AND CONTAINS CONFIDENTIAL AND TRADE SECRET INFORMATION. THIS SHEET MAY NOT BE TRANSFERED FROM THE CUSTODY OF THE COMPETENT DIVISION OF R&D DEPARTMENT EXCEPT AS AUTHORIZED BY COMPAL ELECTRONICS, INC. NEITHER THIS SHEET NOR THE INFORMATION IT CONTAINS MAY BE USED BY OR DISCLOSED TO ANY THIRD PARTY WITHOUT PRIOR WRITTEN CONSENT OF COMPAL ELECTRONICS, INC.

Title: DDR2 SO-DIMM I

Size: Custom | Document Number: LA-3271P | Rev: 0.4

Date: Monday, August 21, 2006 | Sheet 7 of 42

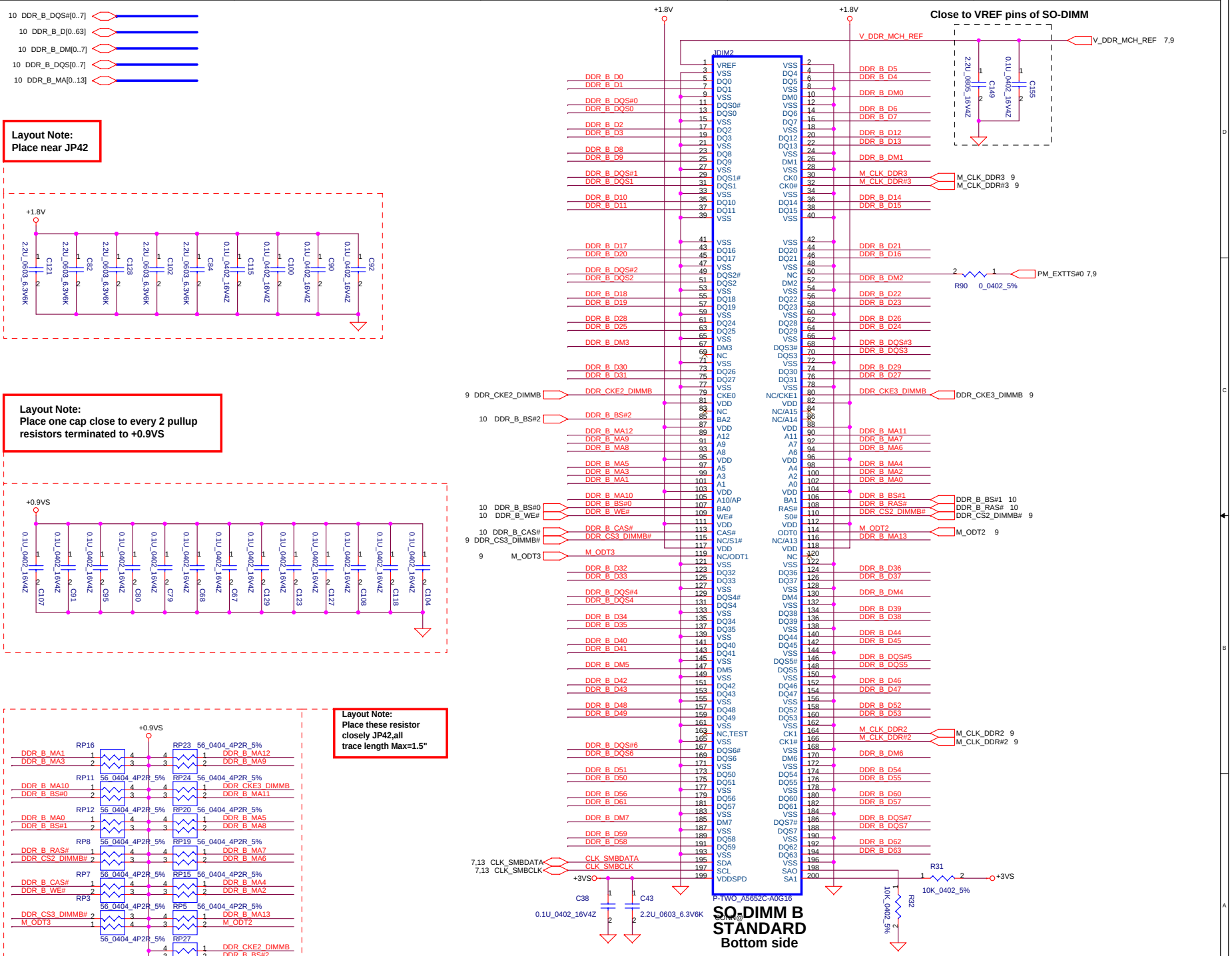

Security Classification	Compal Secret Data		
Issued Date	2005/12/1	Deciphered Date	2006/12/01

THIS SHEET OF ENGINEERING DRAWING IS THE PROPRIETARY PROPERTY OF COMPAL ELECTRONICS, INC. AND CONTAINS CONFIDENTIAL AND TRADE SECRET INFORMATION. THIS SHEET MAY NOT BE TRANSFERED FROM THE CUSTODY OF THE COMPETENT DIVISION OF R&D DEPARTMENT EXCEPT AS AUTHORIZED BY COMPAL ELECTRONICS, INC. NEITHER THIS SHEET NOR THE INFORMATION IT CONTAINS MAY BE USED BY OR DISCLOSED TO ANY THIRD PARTY WITHOUT PRIOR WRITTEN CONSENT OF COMPAL ELECTRONICS, INC.

Title: DDR2 SO-DIMM II

Size: Custom | Document Number: LA-3271P | Rev: 0.4

Date: Monday, August 21, 2006 | Sheet 8 of 42

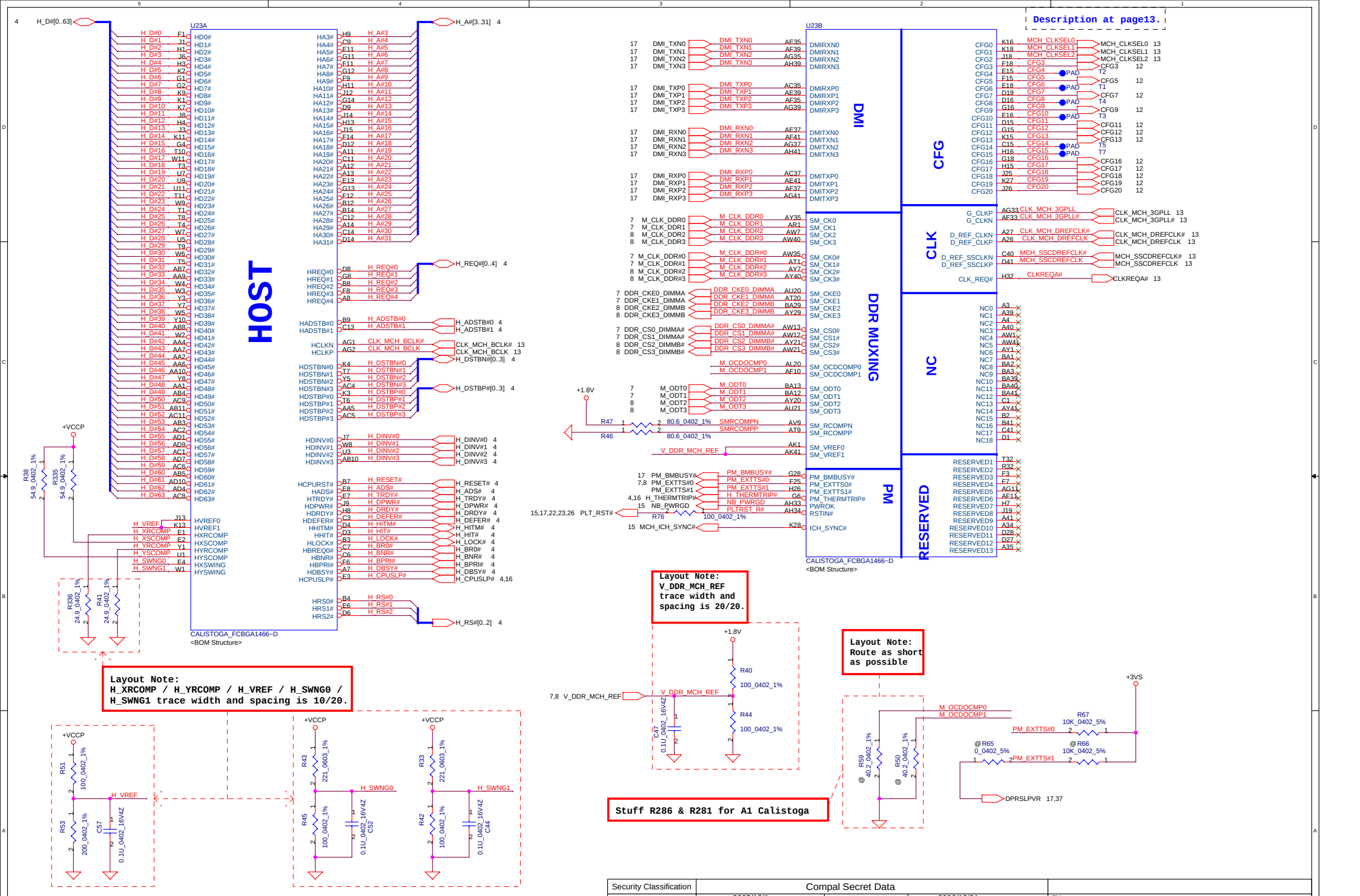

Security Classification	Compal Secret Data		
Issued Date	2005/12/1	Deciphered Date	2006/12/01

THIS SHEET OF ENGINEERING DRAWING IS THE PROPRIETARY PROPERTY OF COMPAL ELECTRONICS, INC. AND CONTAINS CONFIDENTIAL AND TRADE SECRET INFORMATION. THIS SHEET MAY NOT BE TRANSFERRED FROM THE CUSTODY OF THE COMPETENT DIVISION OF R&D DEPARTMENT EXCEPT AS AUTHORIZED BY COMPAL ELECTRONICS, INC. NEITHER THIS SHEET NOR THE INFORMATION IT CONTAINS MAY BE USED BY OR DISCLOSED TO ANY THIRD PARTY WITHOUT PRIOR WRITTEN CONSENT OF COMPAL ELECTRONICS, INC.

Title: **Calistoga(1)**

Size: Custom | Document Number: **LA-3271P** | Rev: 0.4

Date: Monday, August 21, 2006 | Sheet 9 of 42

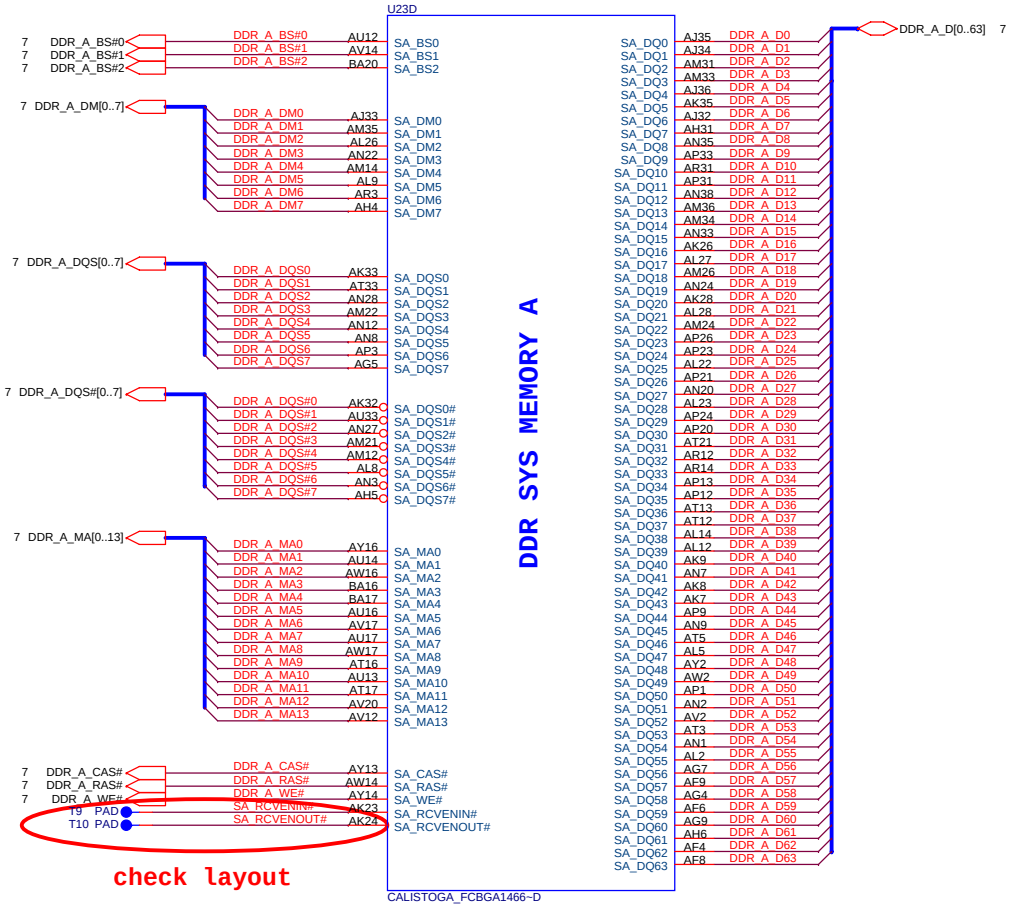

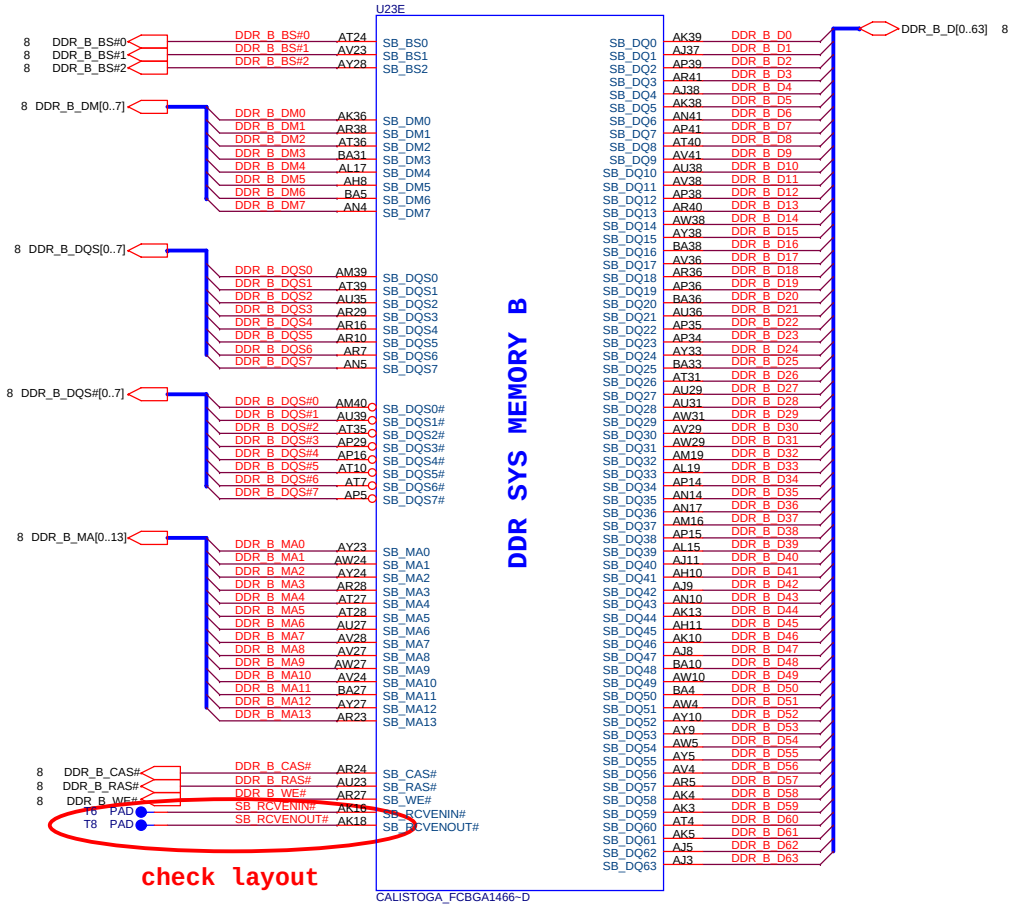

DDR Thermal Sensor

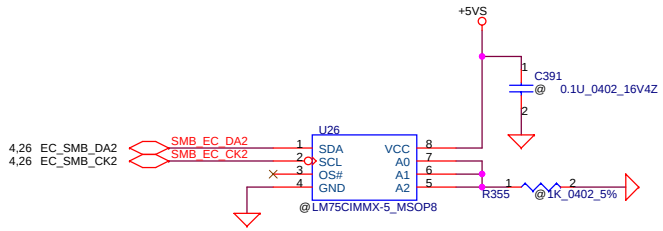

Security Classification	Compal Secret Data		
Issued Date	2005/12/1	Deciphered Date	2006/12/01

THIS SHEET OF ENGINEERING DRAWING IS THE PROPRIETARY PROPERTY OF COMPAL ELECTRONICS, INC. AND CONTAINS CONFIDENTIAL AND TRADE SECRET INFORMATION. THIS SHEET MAY NOT BE TRANSFERED FROM THE CUSTODY OF THE COMPETENT DIVISION OF R&D DEPARTMENT EXCEPT AS AUTHORIZED BY COMPAL ELECTRONICS, INC. NEITHER THIS SHEET NOR THE INFORMATION IT CONTAINS MAY BE USED BY OR DISCLOSED TO ANY THIRD PARTY WITHOUT PRIOR WRITTEN CONSENT OF COMPAL ELECTRONICS, INC.

Title: **Calistoga(2)**

Size: Custom | Document Number: **LA-3271P** | Rev: 0.4

Date: Monday, August 21, 2006 | Sheet 10 of 42

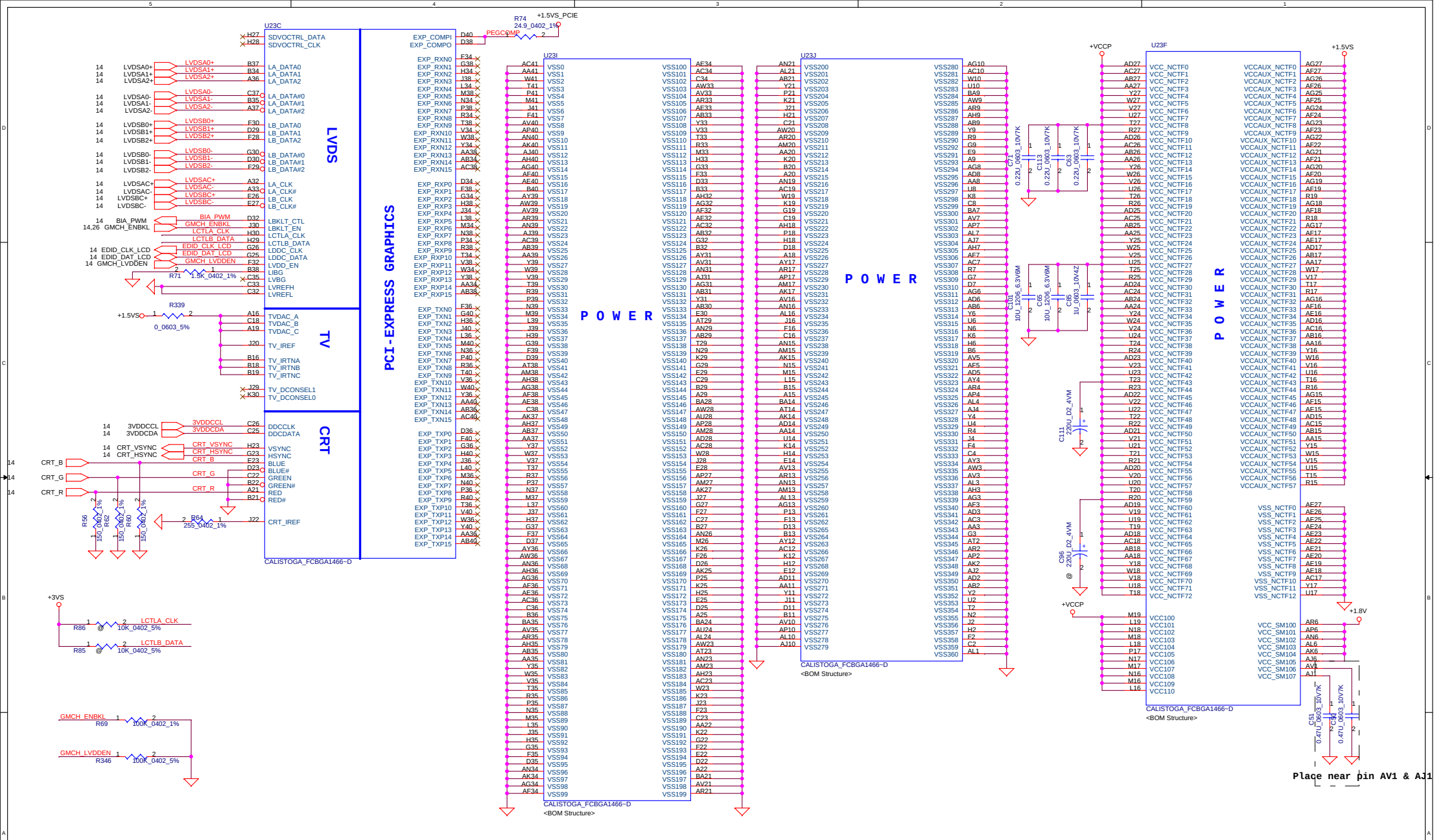

Security Classification	Compal Secret Data		
Issued Date	2005/12/1	Deciphered Date	2006/12/01

THIS SHEET OF ENGINEERING DRAWING IS THE PROPRIETARY PROPERTY OF COMPAL ELECTRONICS, INC. AND CONTAINS CONFIDENTIAL AND TRADE SECRET INFORMATION. THIS SHEET MAY NOT BE TRANSFERED FROM THE CUSTODY OF THE COMPETENT DIVISION OF R&D DEPARTMENT EXCEPT AS AUTHORIZED BY COMPAL ELECTRONICS, INC. NEITHER THIS SHEET NOR THE INFORMATION IT CONTAINS MAY BE USED BY OR DISCLOSED TO ANY THIRD PARTY WITHOUT PRIOR WRITTEN CONSENT OF COMPAL ELECTRONICS, INC.

Title: **Calistoga(3)**

Size	Document Number	Rev
Custom	LA-3271P	0.4

Date: Monday, August 21, 2006 | Sheet 11 of 42

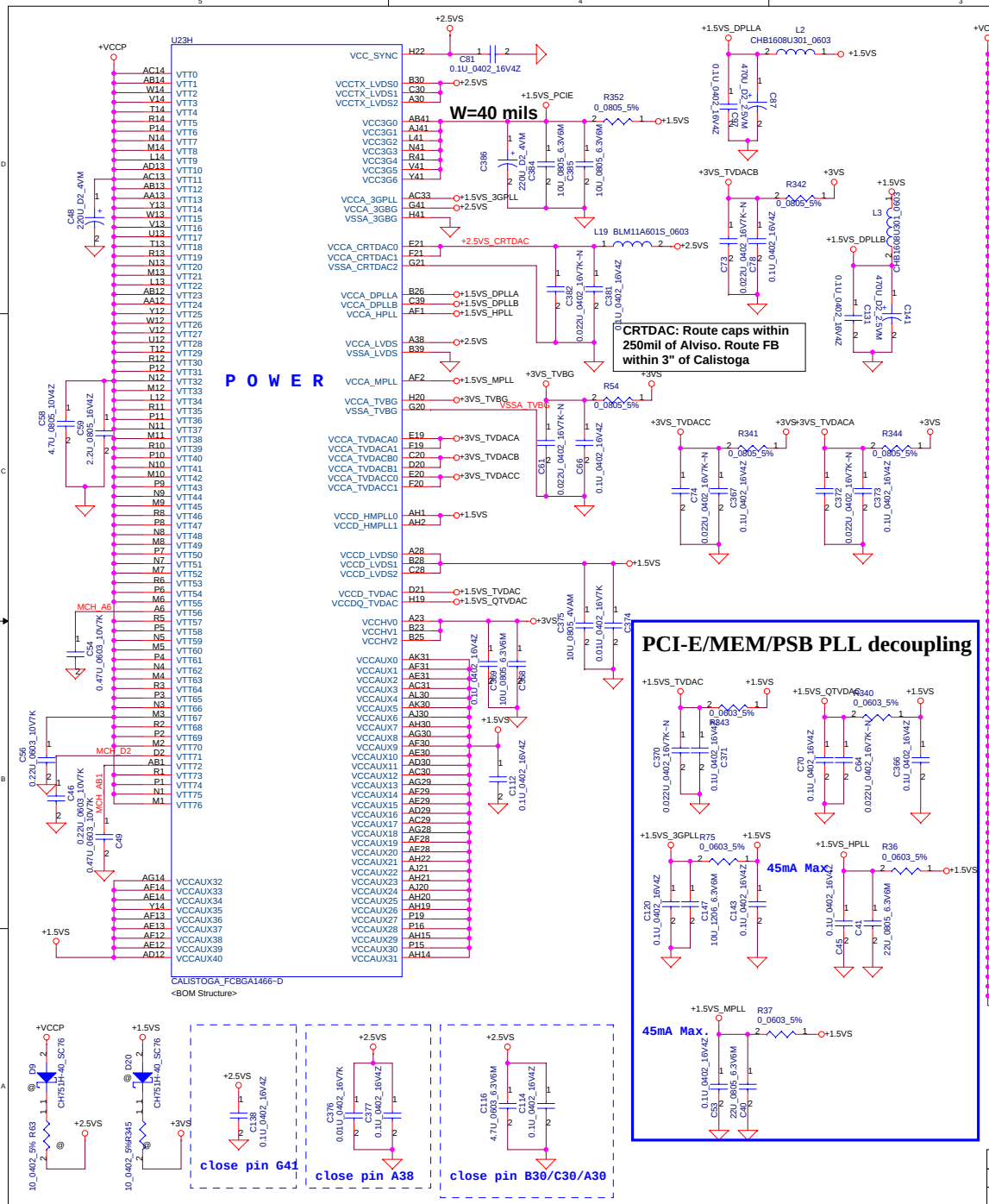

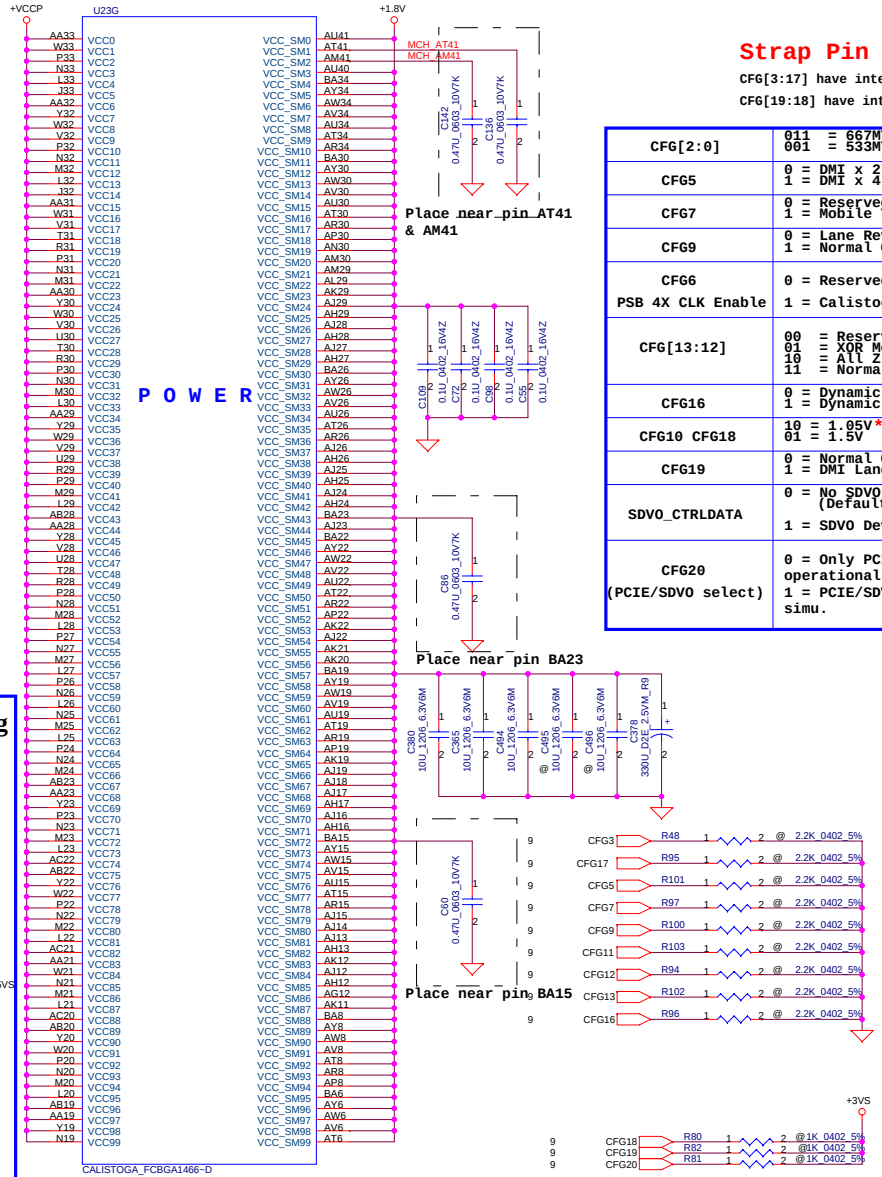

Strap Pin Table

CFG[3:17] have internal pull up

CFG[19:18] have internal pull down

CFG[2:0]	011 = 667MT/s FSB 001 = 533MT/s FSB
CFG5	0 = DMI x 2 1 = DMI x 4 *(Default)
CFG7	0 = Reserved 1 = Mobile Yonah CPU *(Default)
CFG9	0 = Lane Reversal Enable 1 = Normal Operation (Default)*
CFG6 PSB 4X CLK Enable	0 = Reserved 1 = Calistoga *
CFG[13:12]	00 = Reserved 01 = XOR Mode Enabled 10 = All Z Mode Enabled 11 = Normal Operation *(Default)
CFG16	0 = Dynamic ODT Disabled 1 = Dynamic ODT Enabled *(Default)
CFG10 CFG18	10 = 1.05V*(Default) 01 = 1.5V
CFG19	0 = Normal Operation * (Default) 1 = DMI Lane Reversal Enable
SDVO_CTRLDATA	0 = No SDVO Device Present * (Default) 1 = SDVO Device Present
CFG20 (PCIE/SDVO select)	0 = Only PCIE or SDVO is operational. *(Default) 1 = PCIE/SDVO are operating simu.

Security Classification	Compal Secret Data		
Issued Date	2005/12/1	Deciphered Date	2006/12/01

THIS SHEET OF ENGINEERING DRAWING IS THE PROPRIETARY PROPERTY OF COMPAL ELECTRONICS, INC. AND CONTAINS CONFIDENTIAL AND TRADE SECRET INFORMATION. THIS SHEET MAY NOT BE TRANSFERED FROM THE CUSTODY OF THE COMPETENT DIVISION OF R&D DEPARTMENT EXCEPT AS AUTHORIZED BY COMPAL ELECTRONICS, INC. NEITHER THIS SHEET NOR THE INFORMATION IT CONTAINS MAY BE USED BY OR DISCLOSED TO ANY THIRD PARTY WITHOUT PRIOR WRITTEN CONSENT OF COMPAL ELECTRONICS, INC.

Compal Electronics, Inc.

Title: *Calistoga(4)*

Size: Custom | Document Number: *LA-3271P* | Rev: 0.4

Date: Monday, August 21, 2006 | Sheet 12 of 42

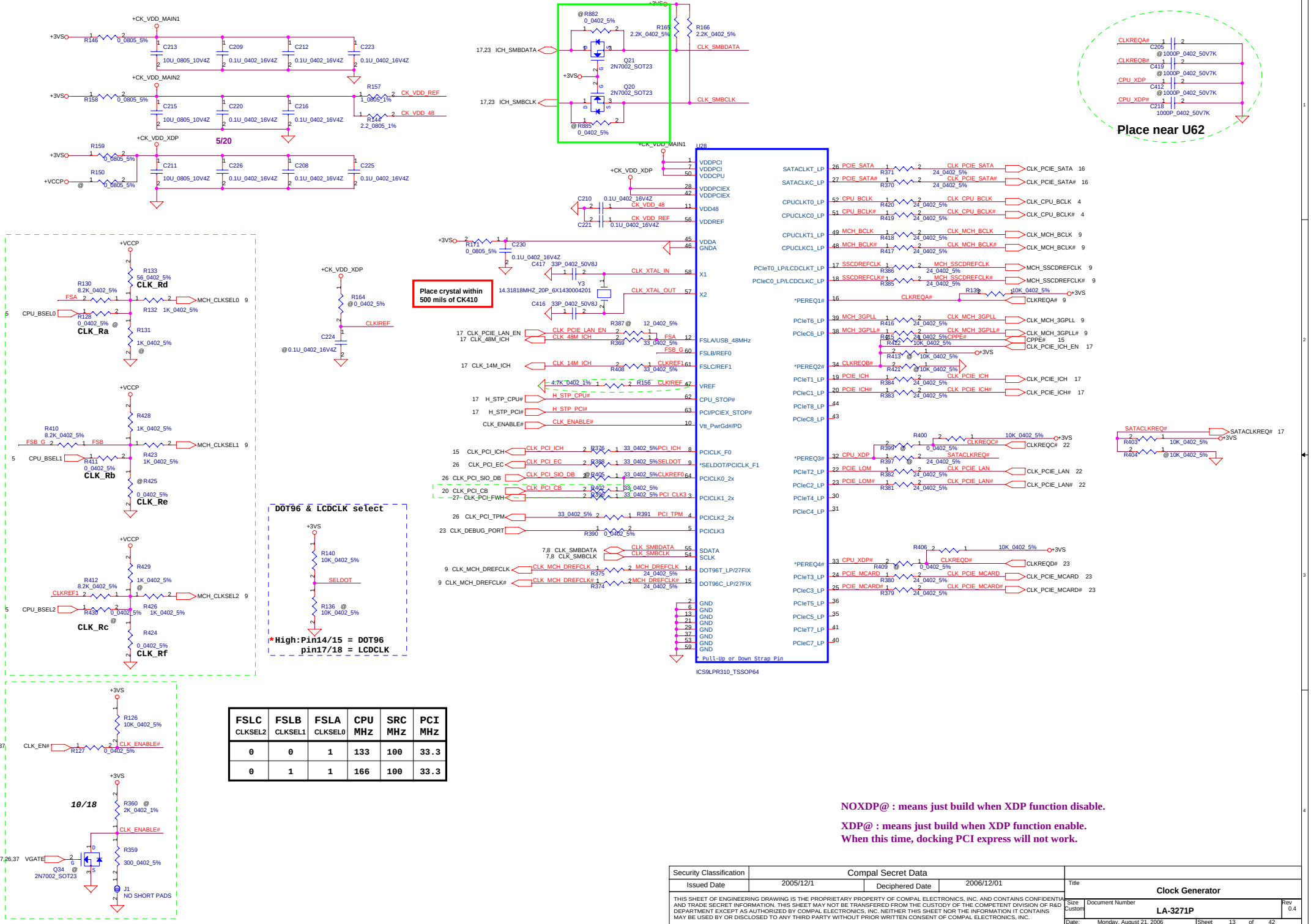

FSLC CLKSEL2	FSLB CLKSEL1	FSLA CLKSEL0	CPU MHz	SRC MHz	PCI MHz
0	0	1	133	100	33.3
0	1	1	166	100	33.3

NOXDP@ : means just build when XDP function disable.

XDP@ : means just build when XDP function enable.
When this time, docking PCI express will not work.

Security Classification	Compal Secret Data		
Issued Date	2005/12/1	Deciphered Date	2006/12/01

THIS SHEET OF ENGINEERING DRAWING IS THE PROPRIETARY PROPERTY OF COMPAL ELECTRONICS, INC. AND CONTAINS CONFIDENTIAL AND TRADE SECRET INFORMATION. THIS SHEET MAY NOT BE TRANSFERED FROM THE CUSTODY OF THE COMPETENT DIVISION OF R&D DEPARTMENT EXCEPT AS AUTHORIZED BY COMPAL ELECTRONICS, INC. NEITHER THIS SHEET NOR THE INFORMATION IT CONTAINS MAY BE USED BY OR DISCLOSED TO ANY THIRD PARTY WITHOUT PRIOR WRITTEN CONSENT OF COMPAL ELECTRONICS, INC.

Title: **Clock Generator**

Size: Custom | Document Number: **LA-3271P** | Rev: 0.4

Date: Monday, August 21, 2006 | Sheet 13 of 42

LCD POWER CIRCUIT

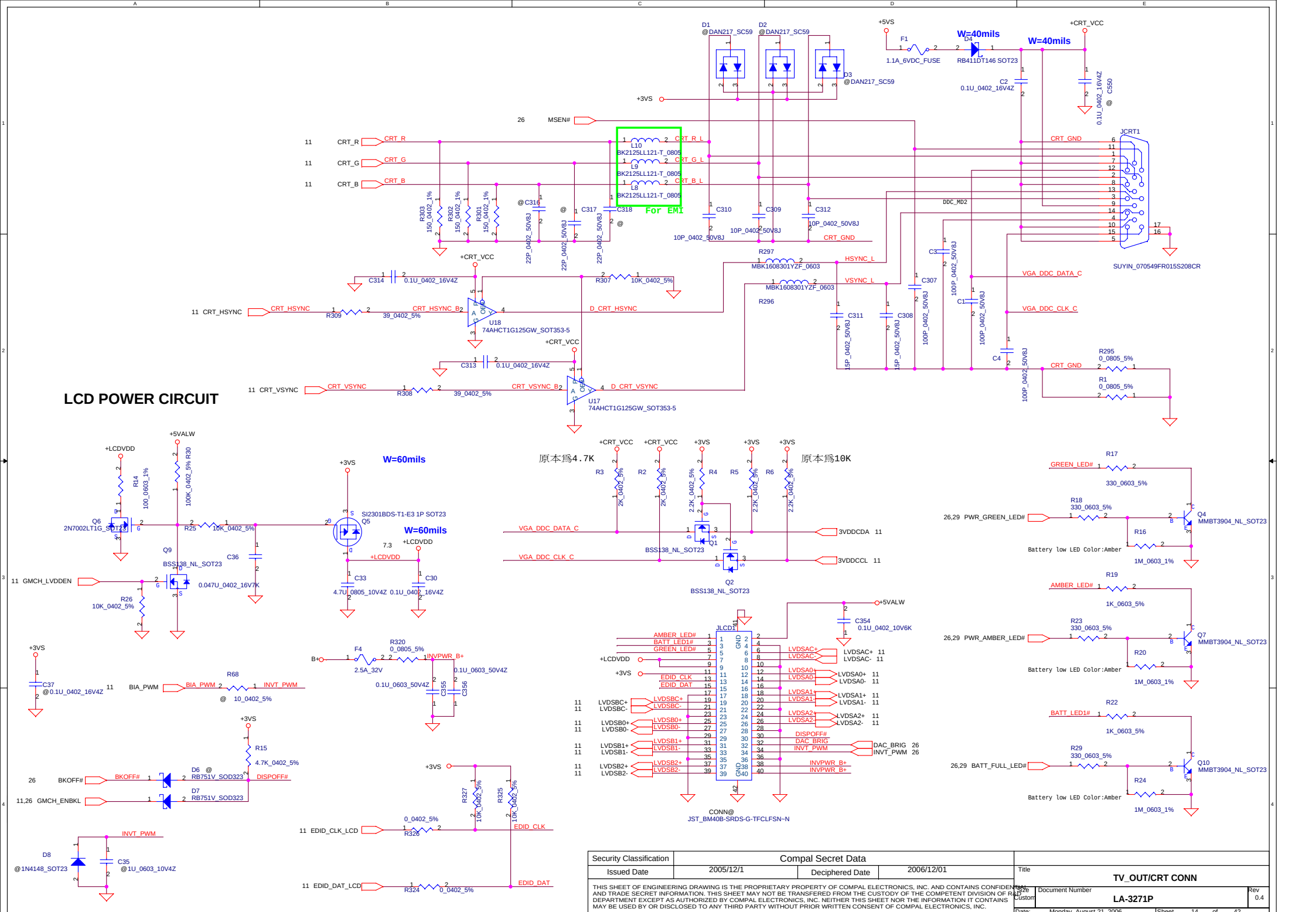

Security Classification	Compal Secret Data		
Issued Date	2005/12/1	Deciphered Date	2006/12/01

THIS SHEET OF ENGINEERING DRAWING IS THE PROPRIETARY PROPERTY OF COMPAL ELECTRONICS, INC. AND CONTAINS CONFIDENTIAL AND TRADE SECRET INFORMATION. THIS SHEET MAY NOT BE TRANSFERRED FROM THE CUSTODY OF THE COMPETENT DIVISION OF R&D DEPARTMENT EXCEPT AS AUTHORIZED BY COMPAL ELECTRONICS, INC. NEITHER THIS SHEET NOR THE INFORMATION IT CONTAINS MAY BE USED BY OR DISCLOSED TO ANY THIRD PARTY WITHOUT PRIOR WRITTEN CONSENT OF COMPAL ELECTRONICS, INC.

Title: TV_OUT/CRT CONN

Size: Custom | Document Number: LA-3271P | Rev: 0.4

Date: Monday, August 21, 2006 | Sheet 14 of 42

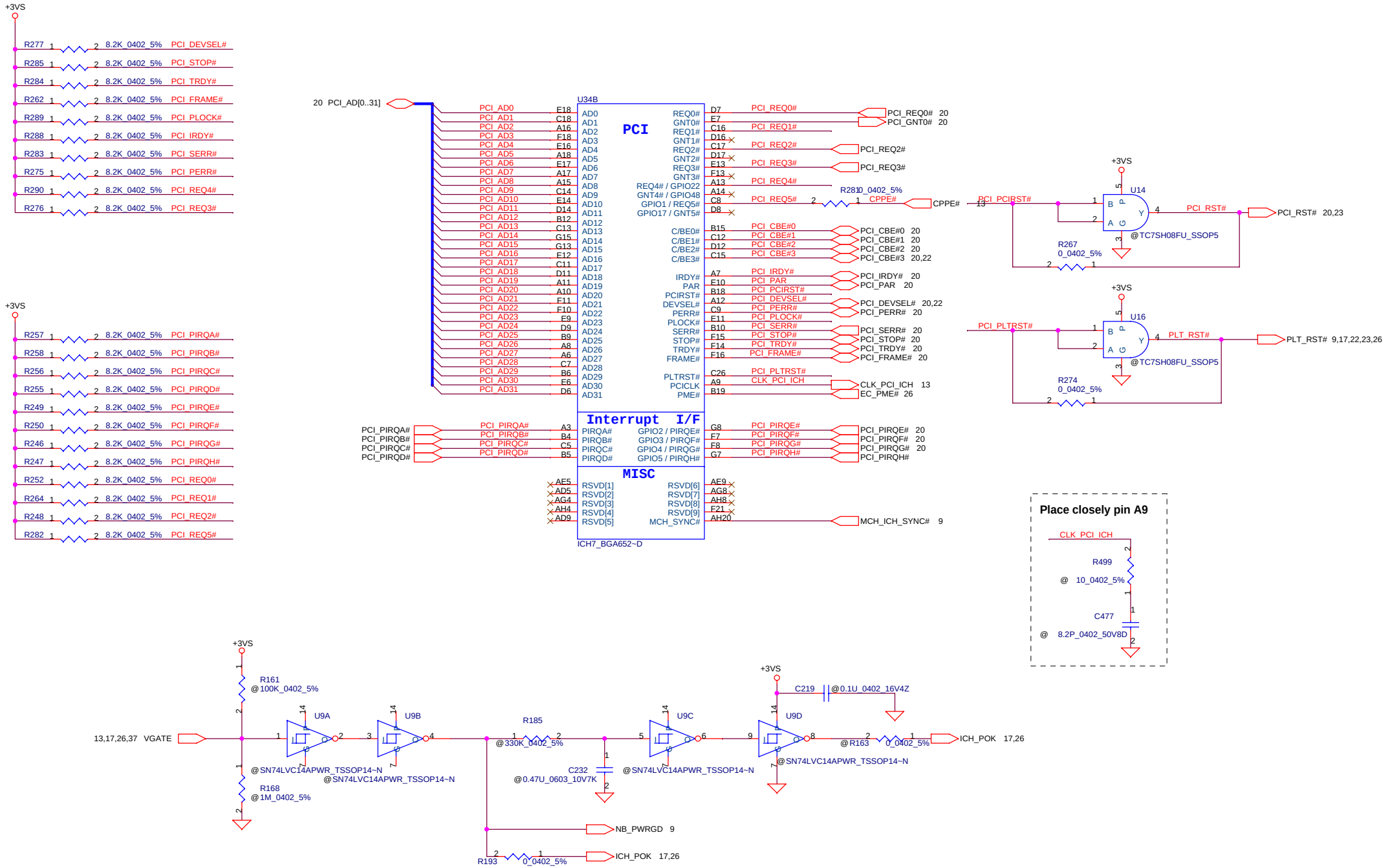

Security Classification	Compal Secret Data		
Issued Date	2005/12/1	Deciphered Date	2006/12/01

THIS SHEET OF ENGINEERING DRAWING IS THE PROPRIETARY PROPERTY OF COMPAL ELECTRONICS, INC. AND CONTAINS CONFIDENTIAL AND TRADE SECRET INFORMATION. THIS SHEET MAY NOT BE TRANSFERED FROM THE CUSTODY OF THE COMPETENT DIVISION OF R&D DEPARTMENT EXCEPT AS AUTHORIZED BY COMPAL ELECTRONICS, INC. NEITHER THIS SHEET NOR THE INFORMATION IT CONTAINS MAY BE USED BY OR DISCLOSED TO ANY THIRD PARTY WITHOUT PRIOR WRITTEN CONSENT OF COMPAL ELECTRONICS, INC.

Title: ICH7-PCI_EXP/PCI/LPC/RTC

Size: Custom | Document Number: LA-3271P | Rev: 0.4

Date: Monday, August 21, 2006 | Sheet 15 of 42

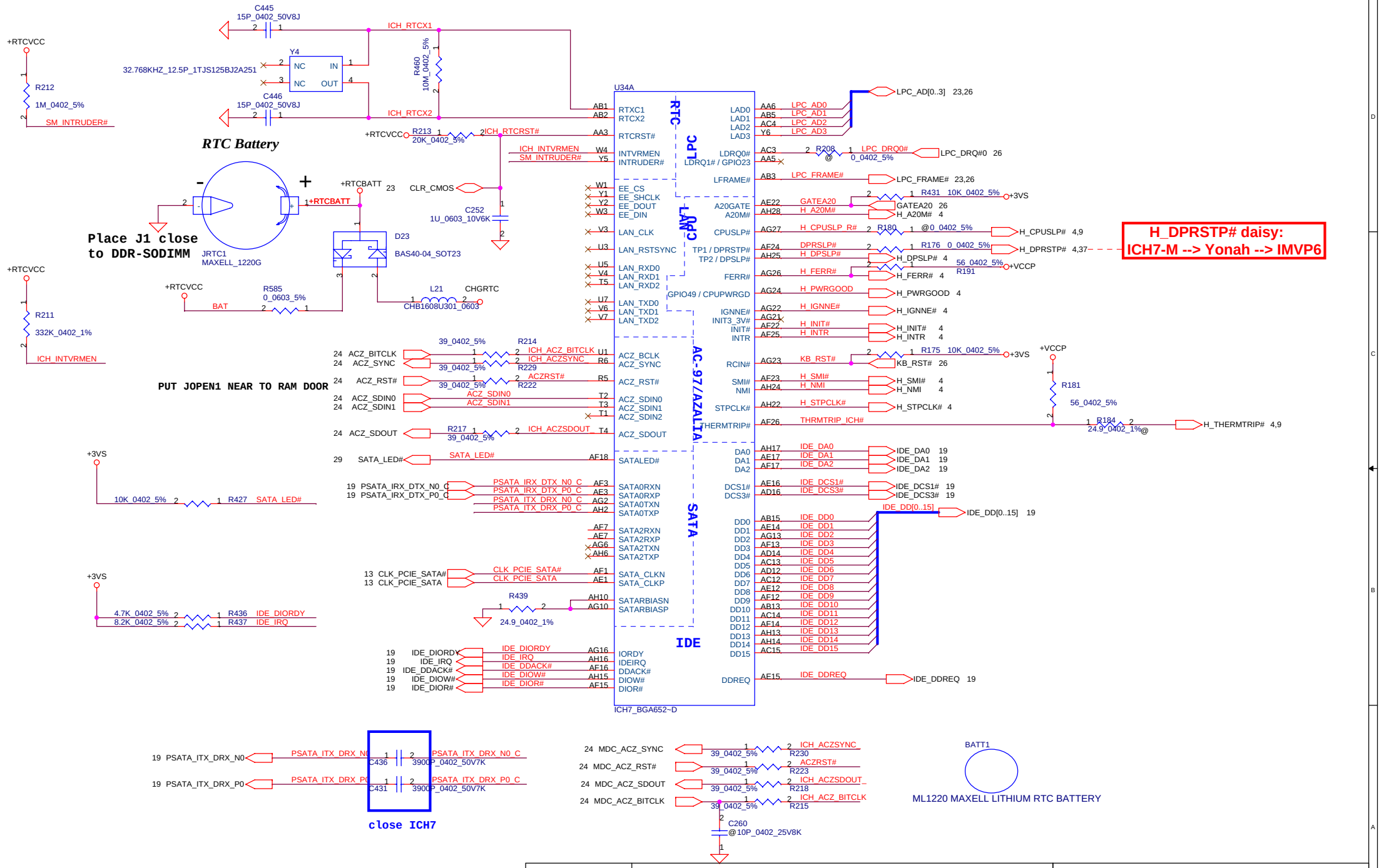

Security Classification	Compal Secret Data		
Issued Date	2005/12/1	Deciphered Date	2006/12/01

THIS SHEET OF ENGINEERING DRAWING IS THE PROPRIETARY PROPERTY OF COMPAL ELECTRONICS, INC. AND CONTAINS CONFIDENTIAL AND TRADE SECRET INFORMATION. THIS SHEET MAY NOT BE TRANSFERED FROM THE CUSTODY OF THE COMPETENT DIVISION OF R&D DEPARTMENT EXCEPT AS AUTHORIZED BY COMPAL ELECTRONICS, INC. NEITHER THIS SHEET NOR THE INFORMATION IT CONTAINS MAY BE USED BY OR DISCLOSED TO ANY THIRD PARTY WITHOUT PRIOR WRITTEN CONSENT OF COMPAL ELECTRONICS, INC.

Title: ICH7-USB/ACPI/AC97/GPIO

Size: Custom | Document Number: LA-3271P | Rev: 0.4

Date: Monday, August 21, 2006 | Sheet 16 of 42

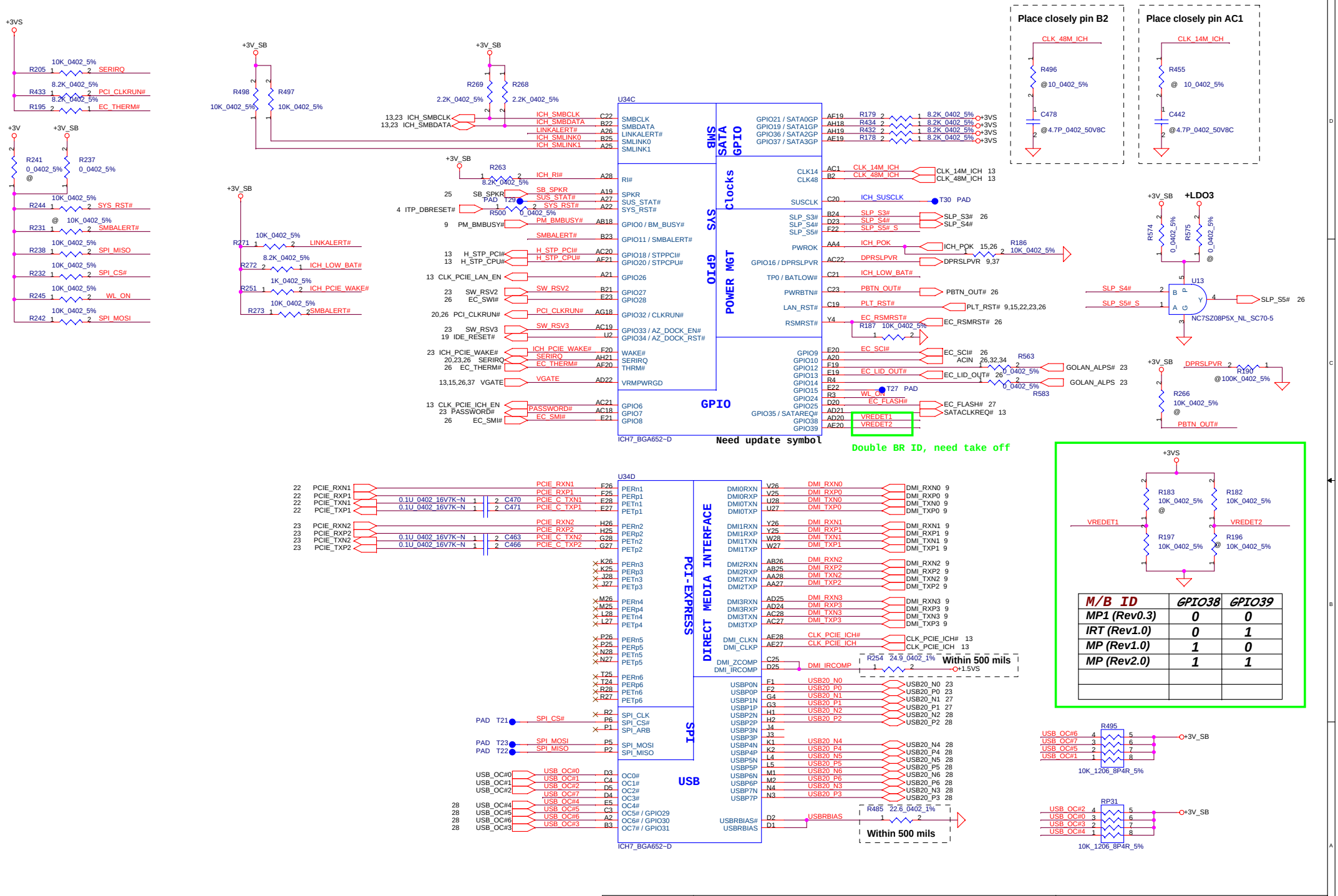

M/B ID	GPIO38	GPIO39
MP1 (Rev0.3)	0	0
IRT (Rev1.0)	0	1
MP (Rev1.0)	1	0
MP (Rev2.0)	1	1

Security Classification	Compal Secret Data		
Issued Date	2005/12/1	Deciphered Date	2006/12/01

THIS SHEET OF ENGINEERING DRAWING IS THE PROPRIETARY PROPERTY OF COMPAL ELECTRONICS, INC. AND CONTAINS CONFIDENTIAL AND TRADE SECRET INFORMATION. THIS SHEET MAY NOT BE TRANSFERRED FROM THE CUSTODY OF THE COMPETENT DIVISION OR R&D DEPARTMENT EXCEPT AS AUTHORIZED BY COMPAL ELECTRONICS, INC. NEITHER THIS SHEET NOR THE INFORMATION IT CONTAINS MAY BE USED BY OR DISCLOSED TO ANY THIRD PARTY WITHOUT PRIOR WRITTEN CONSENT OF COMPAL ELECTRONICS, INC.

Title: **ICH7-IDE/SATA**

Size: Custom | Document Number: **LA-3271P** | Rev: 0.4

Date: Monday, August 21, 2006 | Sheet 17 of 42

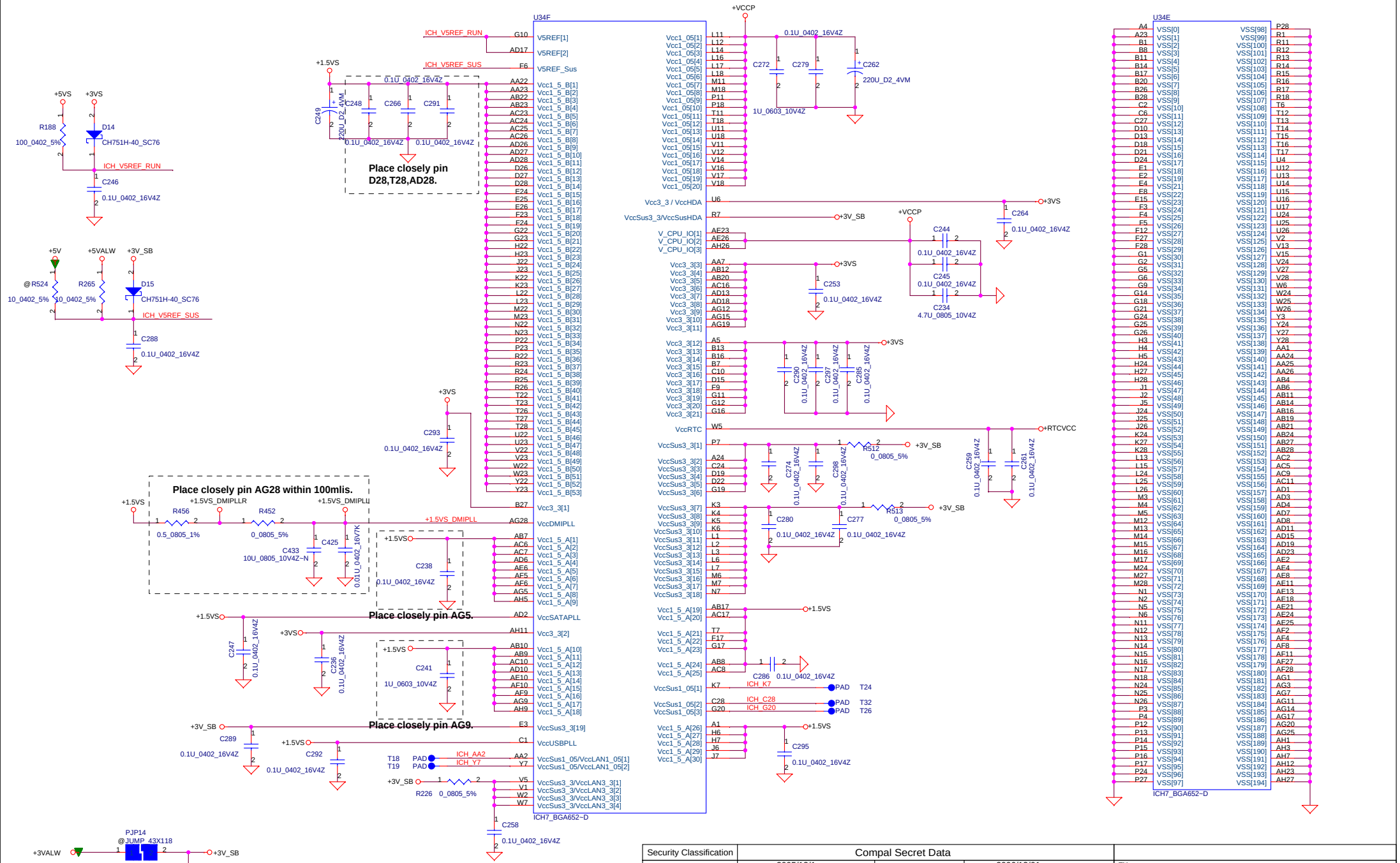

Security Classification	Compal Secret Data		
Issued Date	2005/12/1	Deciphered Date	2006/12/01

THIS SHEET OF ENGINEERING DRAWING IS THE PROPRIETARY PROPERTY OF COMPAL ELECTRONICS, INC. AND CONTAINS CONFIDENTIAL AND TRADE SECRET INFORMATION. THIS SHEET MAY NOT BE TRANSFERED FROM THE CUSTODY OF THE COMPETENT DIVISION OF R&D DEPARTMENT EXCEPT AS AUTHORIZED BY COMPAL ELECTRONICS, INC. NEITHER THIS SHEET NOR THE INFORMATION IT CONTAINS MAY BE USED BY OR DISCLOSED TO ANY THIRD PARTY WITHOUT PRIOR WRITTEN CONSENT OF COMPAL ELECTRONICS, INC.

Title: **ICH7-Power/GND**

Size: Custom | Document Number: **LA-3271P** | Rev: 0.4

Date: Monday, August 21, 2006 | Sheet 18 of 42

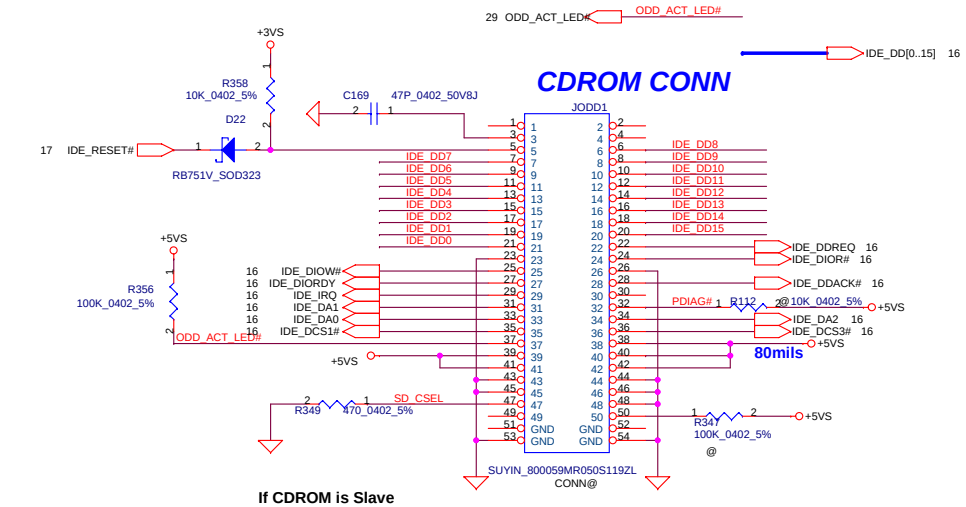

If CDROM is Slave
then SD_CSEL= Floating
else SD_CSEL= Low

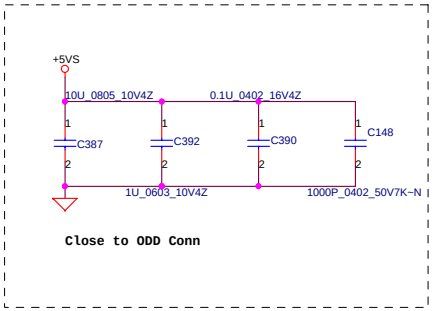

SATA HDD CONN

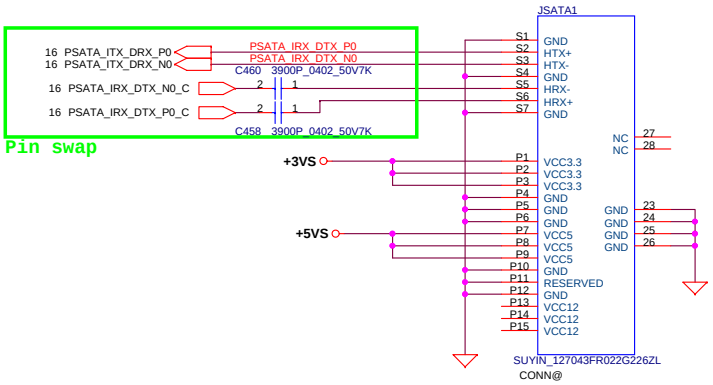

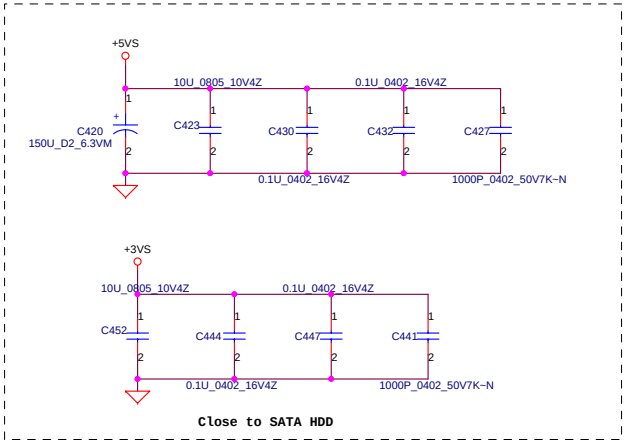

Security Classification	Compal Secret Data		
Issued Date	2005/12/1	Deciphered Date	2006/12/01

THIS SHEET OF ENGINEERING DRAWING IS THE PROPRIETARY PROPERTY OF COMPAL ELECTRONICS, INC. AND CONTAINS CONFIDENTIAL AND TRADE SECRET INFORMATION. THIS SHEET MAY NOT BE TRANSFERED FROM THE CUSTODY OF THE COMPETENT DIVISION OF R&D DEPARTMENT EXCEPT AS AUTHORIZED BY COMPAL ELECTRONICS, INC. NEITHER THIS SHEET NOR THE INFORMATION IT CONTAINS MAY BE USED BY OR DISCLOSED TO ANY THIRD PARTY WITHOUT PRIOR WRITTEN CONSENT OF COMPAL ELECTRONICS, INC.

Title	HDD/CDROM		
Size: Custom	Document Number: LA-3271P		Rev: 0.4
Date: Monday, August 21, 2006	Sheet 19 of 42		

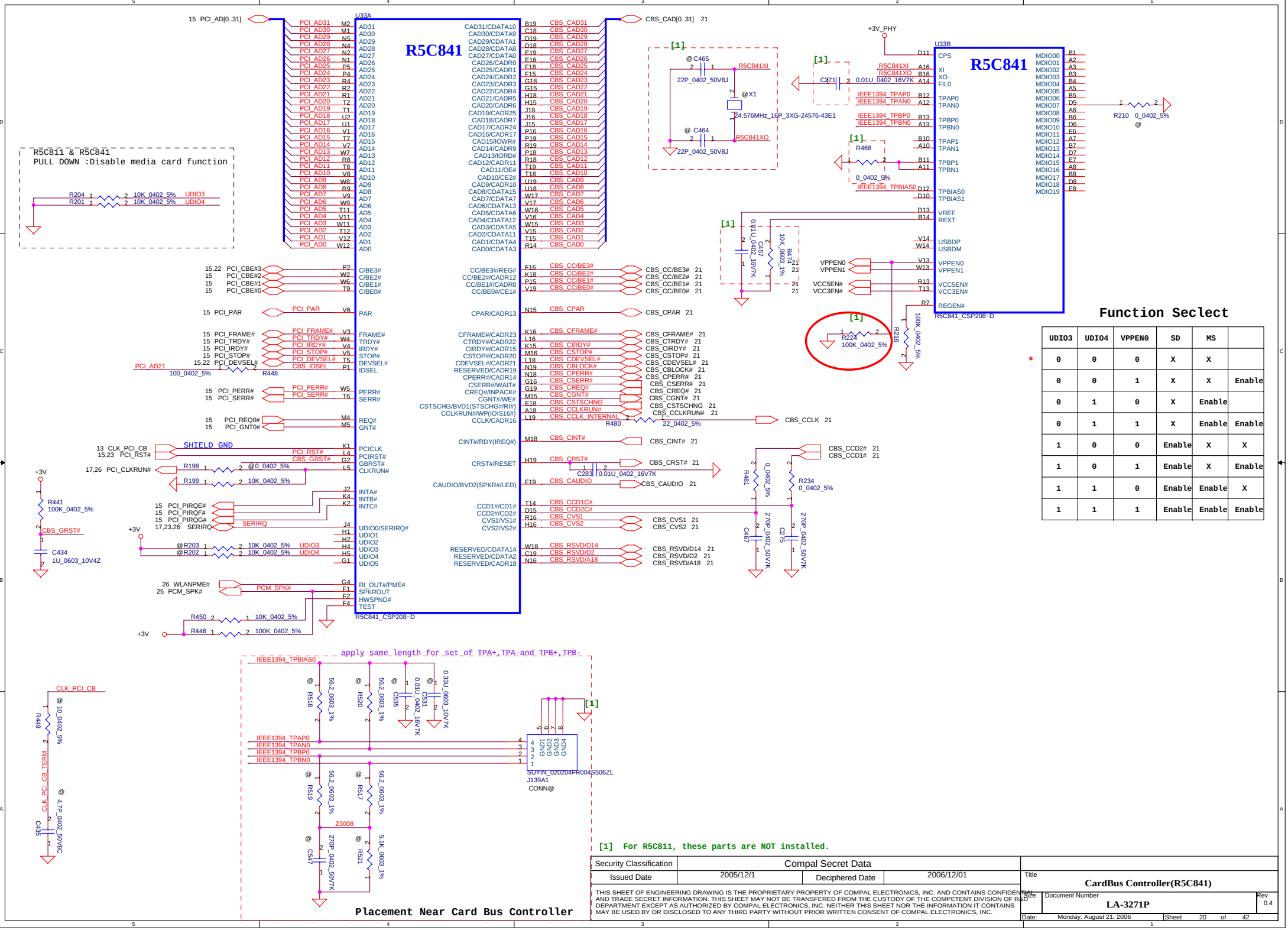
R5C841
U33A
R5C841 & R5C841
PULL DOWN :Disable media card function
R204 10K_0402_5% UDIO3
R201 10K_0402_5% UDIO4
SHIELD GND
apply same length for set of TPA+,TPA-and TPB+,TPB-
IEEE1394_TPBIAS0
IEEE1394_TPAP0
IEEE1394_TPAN0
IEEE1394_TPBP0
IEEE1394_TPBN0
SUYIN_020204FR004S506ZL
J139A1
CONN@
Z3008
CLK_PCI_CB
CLK_PCI_CB_TERM
Placement Near Card Bus Controller
U33B
R5C841_CSP208-D
Function Seclect
[1] For R5C811, these parts are NOT installed.
Security Classification
Compal Secret Data
Issued Date
2005/12/1
Deciphered Date
2006/12/01
THIS SHEET OF ENGINEERING DRAWING IS THE PROPRIETARY PROPERTY OF COMPAL ELECTRONICS, INC. AND CONTAINS CONFIDENTIAL AND TRADE SECRET INFORMATION. THIS SHEET MAY NOT BE TRANSFERED FROM THE CUSTODY OF THE COMPETENT DIVISION OF R&D DEPARTMENT EXCEPT AS AUTHORIZED BY COMPAL ELECTRONICS, INC. NEITHER THIS SHEET NOR THE INFORMATION IT CONTAINS MAY BE USED BY OR DISCLOSED TO ANY THIRD PARTY WITHOUT PRIOR WRITTEN CONSENT OF COMPAL ELECTRONICS, INC.
Title
CardBus Controller(R5C841)
Size
Document Number
LA-3271P
Rev
0.4
Date: Monday, August 21, 2006
Sheet 20 of 42

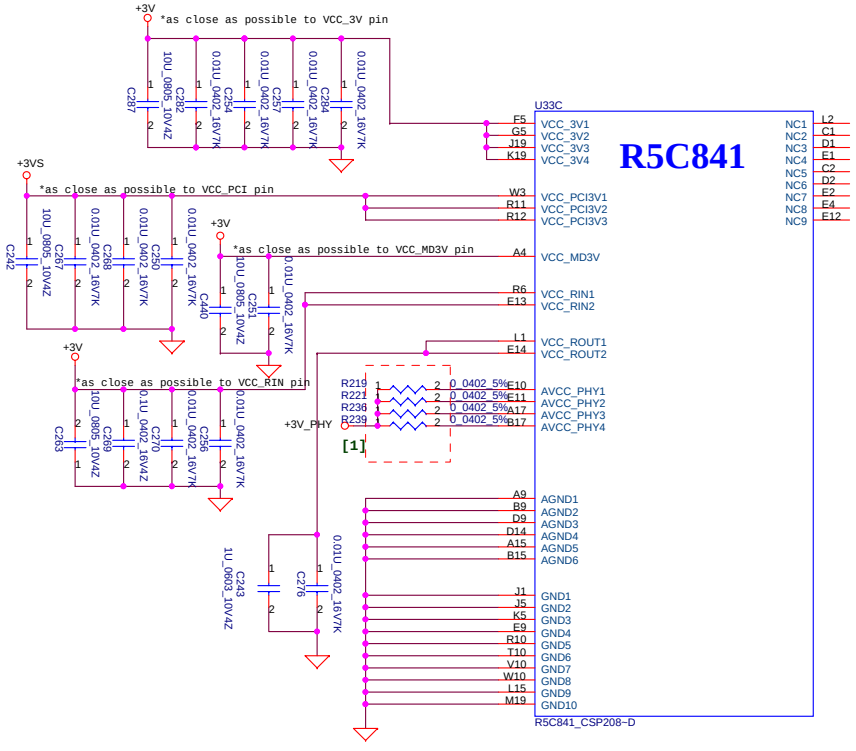

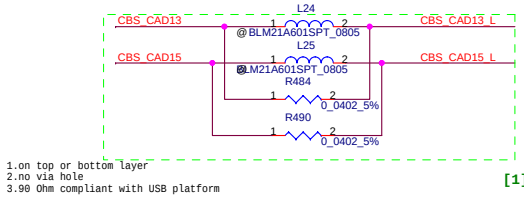

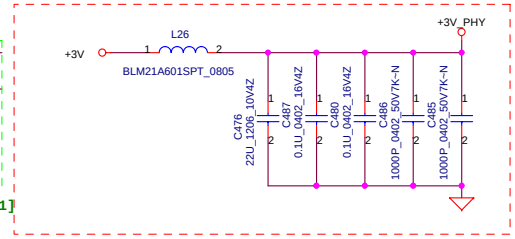

USB Signals for Epress Card

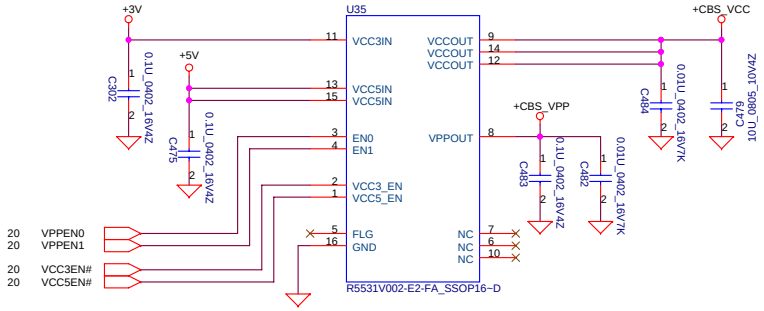

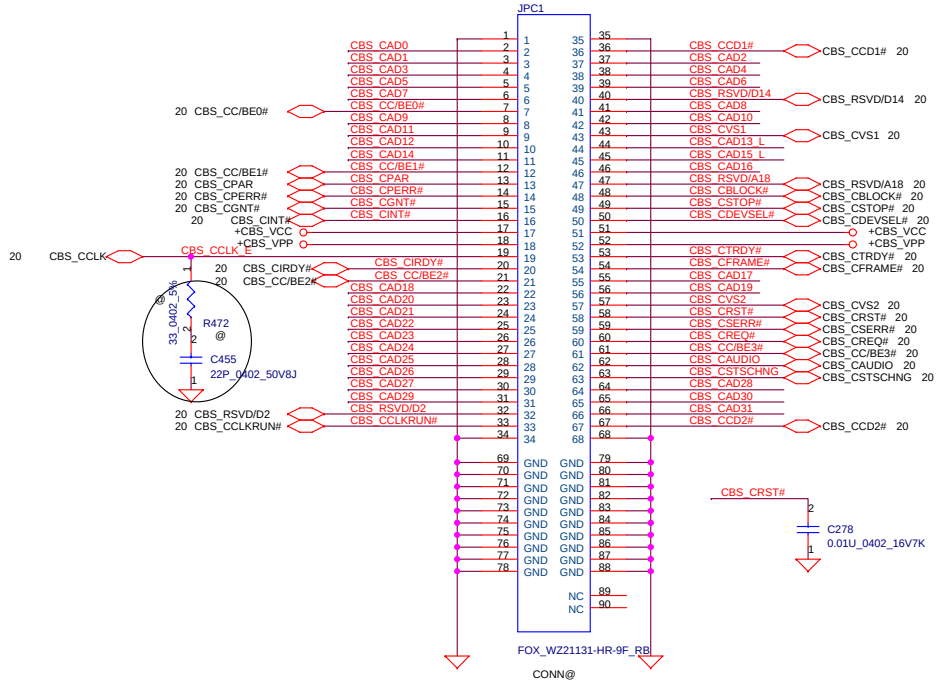

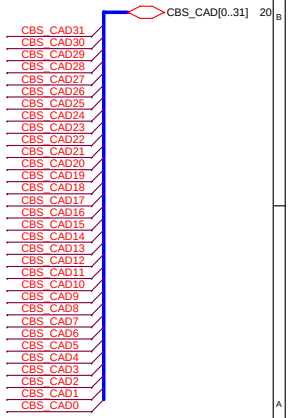

[1] For R5C811, these parts are NOT installed.

	JSD1 Pin3	
JSD1 Pin1	Short (L)	SD UnWP
	Open (H)	SD WP

Security Classification	Compal Secret Data		
Issued Date	2005/12/1	Deciphered Date	2006/12/01

THIS SHEET OF ENGINEERING DRAWING IS THE PROPRIETARY PROPERTY OF COMPAL ELECTRONICS, INC. AND CONTAINS CONFIDENTIAL AND TRADE SECRET INFORMATION. THIS SHEET MAY NOT BE TRANSFERED FROM THE CUSTODY OF THE COMPETENT DIVISION OF R&D DEPARTMENT EXCEPT AS AUTHORIZED BY COMPAL ELECTRONICS, INC. NEITHER THIS SHEET NOR THE INFORMATION IT CONTAINS MAY BE USED BY OR DISCLOSED TO ANY THIRD PARTY WITHOUT PRIOR WRITTEN CONSENT OF COMPAL ELECTRONICS, INC.

Compal Electronics, Inc.

Title: 1394 & Media Card

Size | Document Number: LA-3271P | Rev: 0.4

Date: Monday, August 21, 2006 | Sheet 21 of 42

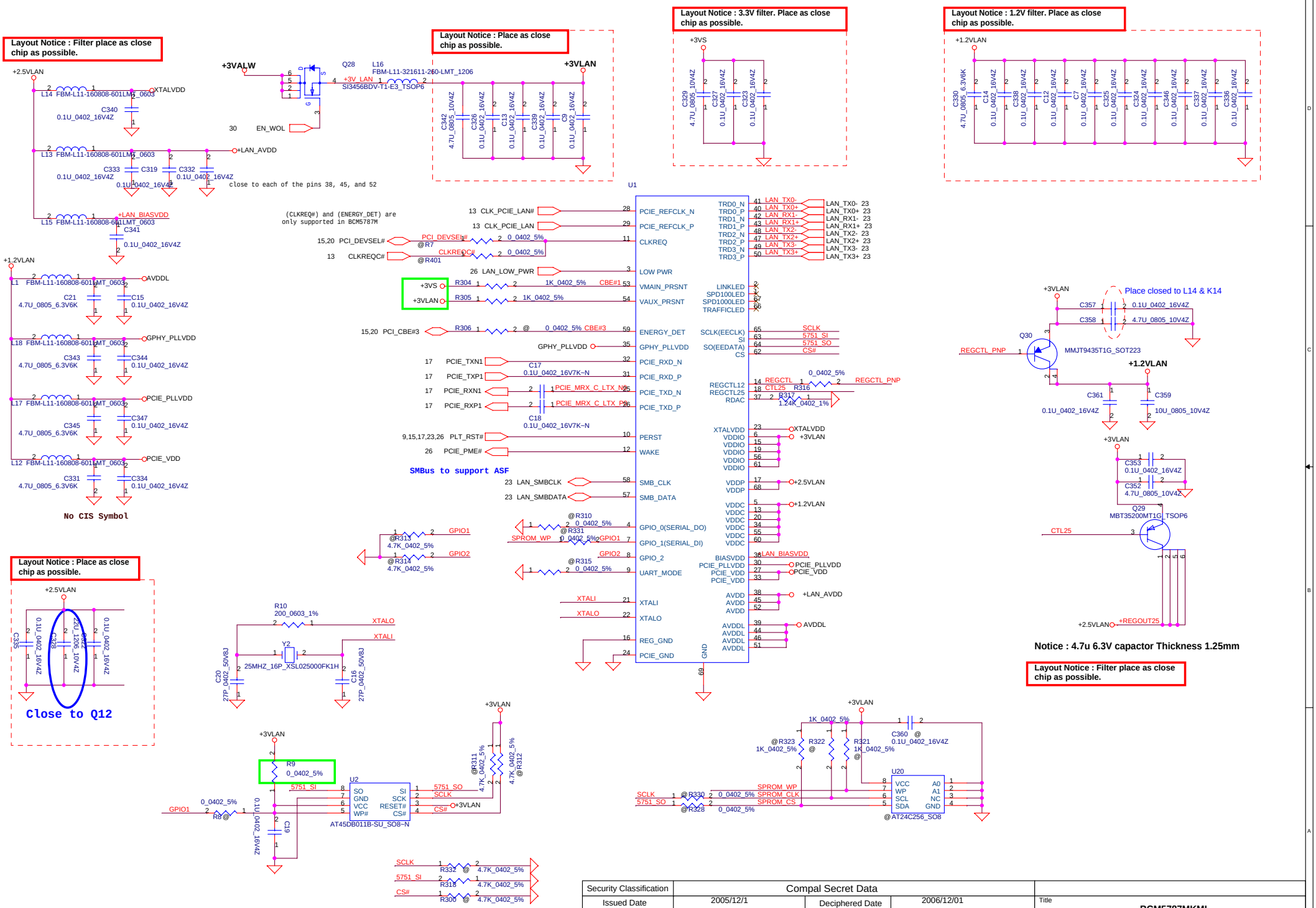

Security Classification	Compal Secret Data		
Issued Date	2005/12/1	Deciphered Date	2006/12/01

THIS SHEET OF ENGINEERING DRAWING IS THE PROPRIETARY PROPERTY OF COMPAL ELECTRONICS, INC. AND CONTAINS CONFIDENTIAL AND TRADE SECRET INFORMATION. THIS SHEET MAY NOT BE TRANSFERED FROM THE CUSTODY OF THE COMPETENT DIVISION OF R&D DEPARTMENT EXCEPT AS AUTHORIZED BY COMPAL ELECTRONICS, INC. NEITHER THIS SHEET NOR THE INFORMATION IT CONTAINS MAY BE USED BY OR DISCLOSED TO ANY THIRD PARTY WITHOUT PRIOR WRITTEN CONSENT OF COMPAL ELECTRONICS, INC.

Title: **BCM5787MKML**

Size: Custom | Document Number: **LA-3271P** | Rev: 0.4

Date: Monday, August 21, 2006 | Sheet 22 of 42

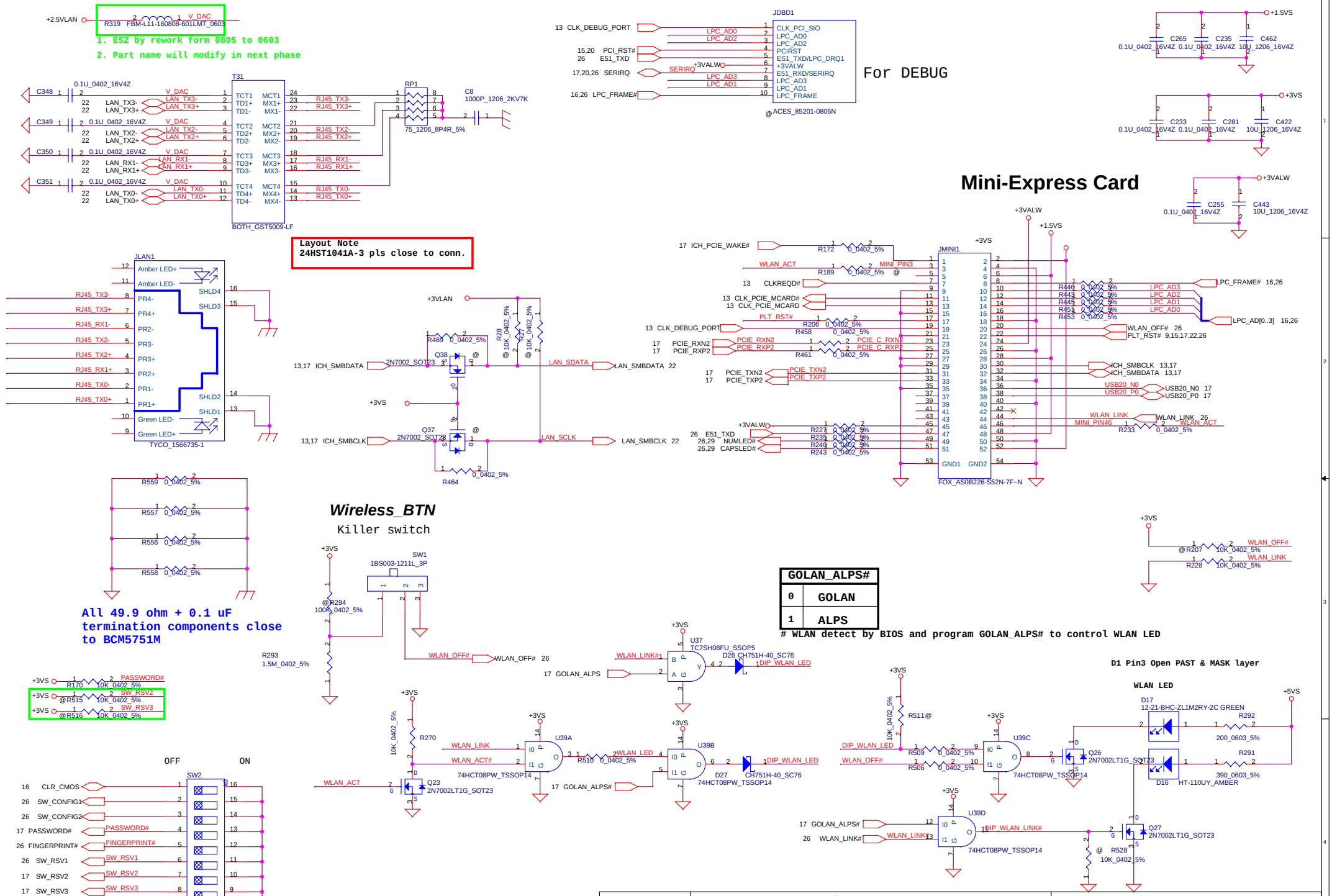

Security Classification	Compal Secret Data		
Issued Date	2005/12/1	Deciphered Date	2006/12/01

THIS SHEET OF ENGINEERING DRAWING IS THE PROPRIETARY PROPERTY OF COMPAL ELECTRONICS, INC. AND CONTAINS CONFIDENTIAL AND TRADE SECRET INFORMATION. THIS SHEET MAY NOT BE TRANSFERED FROM THE CUSTODY OF THE COMPETENT DIVISION OF R&D DEPARTMENT EXCEPT AS AUTHORIZED BY COMPAL ELECTRONICS, INC. NEITHER THIS SHEET NOR THE INFORMATION IT CONTAINS MAY BE USED BY OR DISCLOSED TO ANY THIRD PARTY WITHOUT PRIOR WRITTEN CONSENT OF COMPAL ELECTRONICS, INC.

Title: GOLD LAN & LAN CONN

Size: Custom | Document Number: LA-3271P | Rev: 0.4

Date: Monday, August 21, 2006 | Sheet 23 of 42

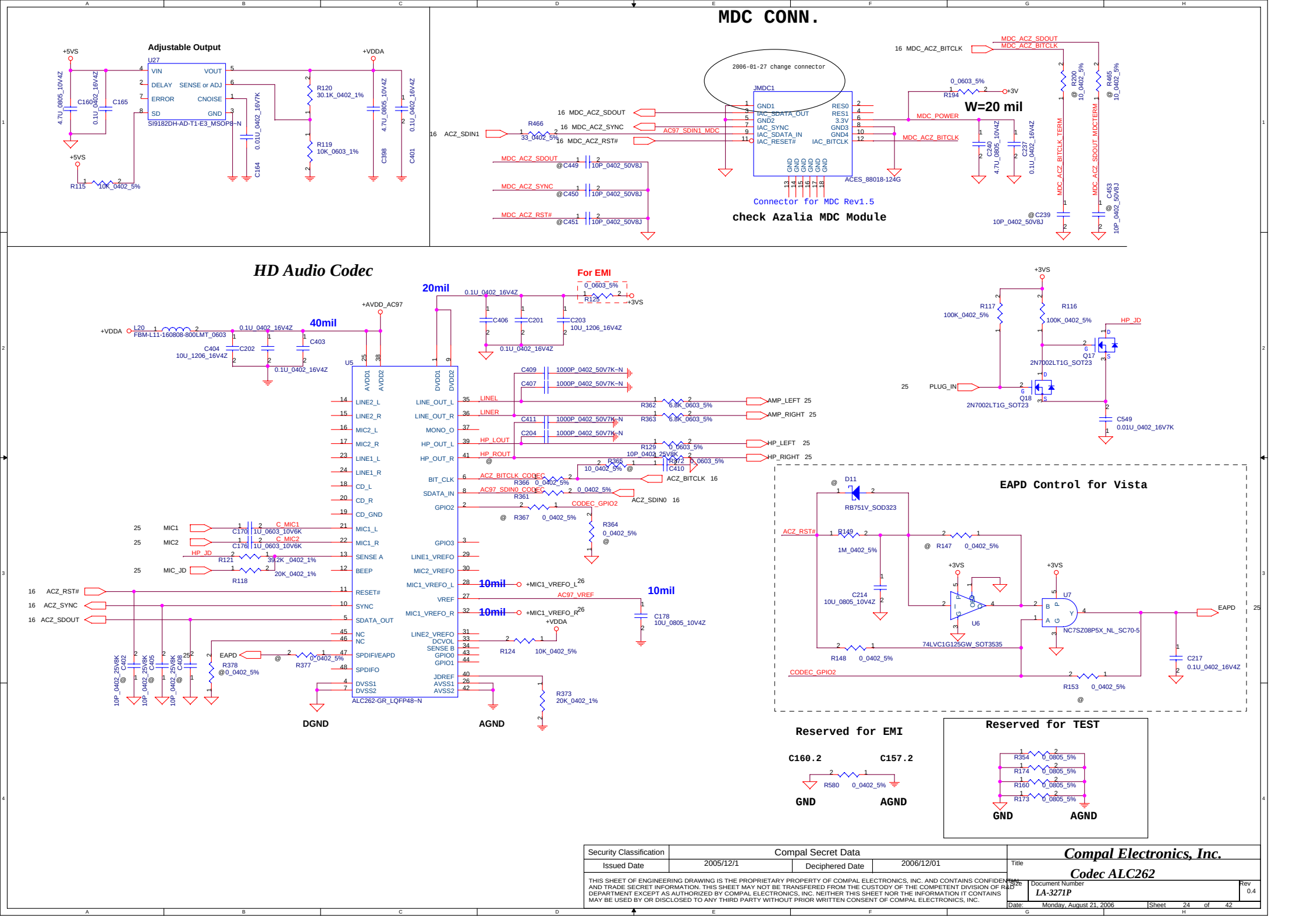

Security Classification	Compal Secret Data		
Issued Date	2005/12/1	Deciphered Date	2006/12/01

THIS SHEET OF ENGINEERING DRAWING IS THE PROPRIETARY PROPERTY OF COMPAL ELECTRONICS, INC. AND CONTAINS CONFIDENTIAL AND TRADE SECRET INFORMATION. THIS SHEET MAY NOT BE TRANSFERED FROM THE CUSTODY OF THE COMPETENT DIVISION OF R&D DEPARTMENT EXCEPT AS AUTHORIZED BY COMPAL ELECTRONICS, INC. NEITHER THIS SHEET NOR THE INFORMATION IT CONTAINS MAY BE USED BY OR DISCLOSED TO ANY THIRD PARTY WITHOUT PRIOR WRITTEN CONSENT OF COMPAL ELECTRONICS, INC.

Compal Electronics, Inc.

Title: Codec ALC262

Size | Document Number: LA-3271P | Rev: 0.4

Date: Monday, August 21, 2006 | Sheet 24 of 42

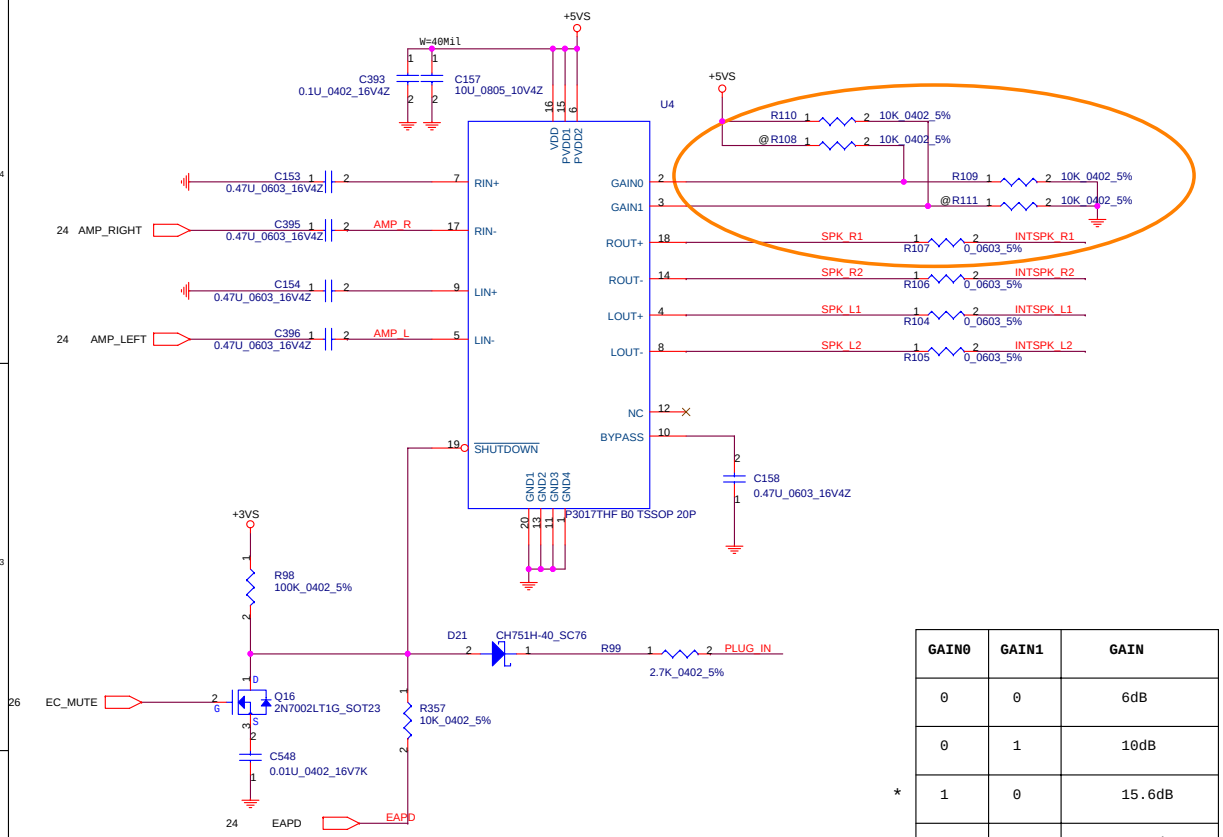

GAIN0	GAIN1	GAIN
0	0	6dB
0	1	10dB
1	0	15.6dB
1	1	21.6dB

*

Buzzer need to support ICH/PCM_SPK/Battery_low and WL_on/off

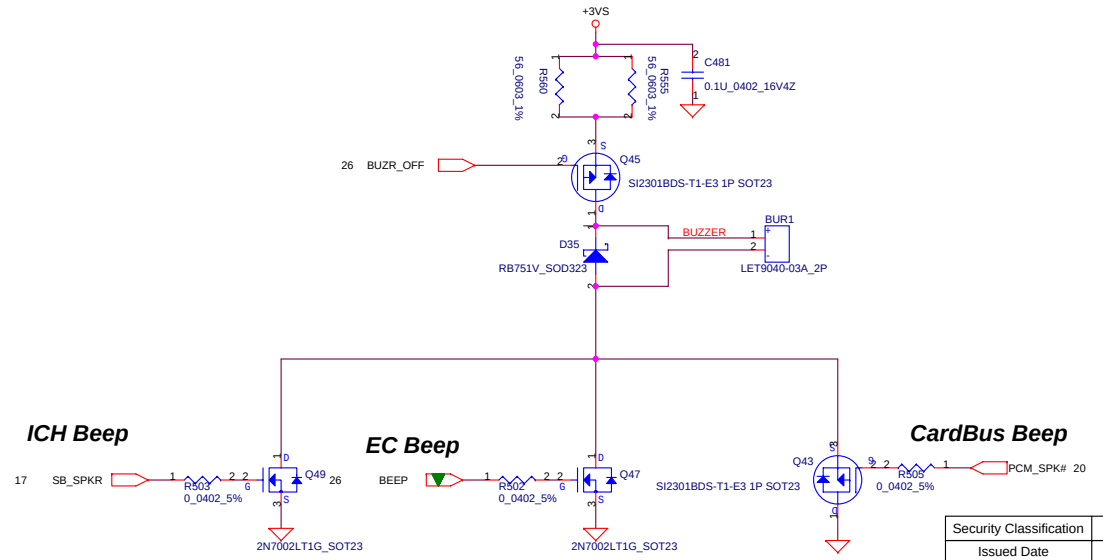

Speaker Connector

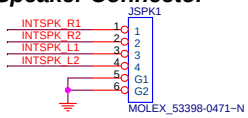

MICROPHONE IN JACK

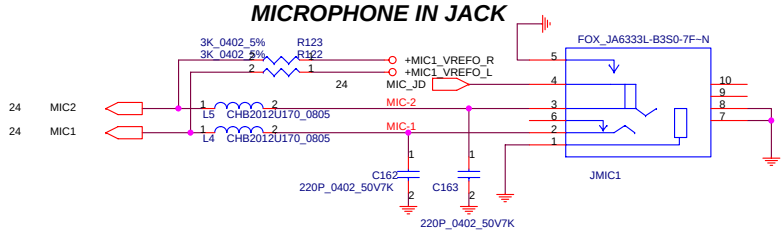

HEADPHONE OUT JACK

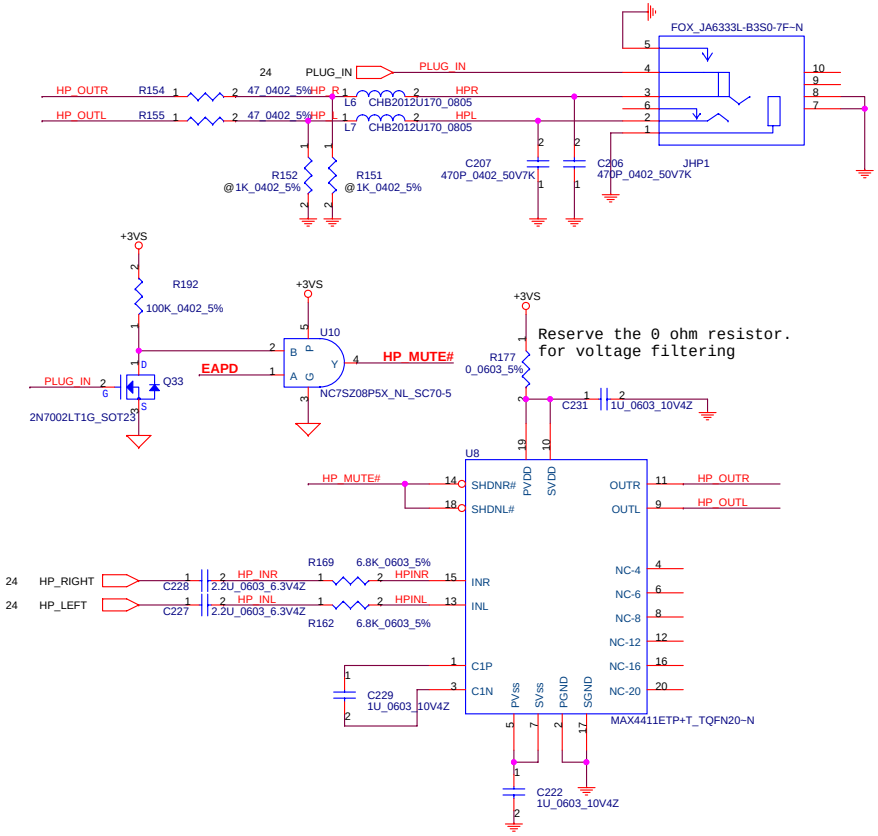

Security Classification	Compal Secret Data		
Issued Date	2005/12/1	Deciphered Date	2006/12/01

THIS SHEET OF ENGINEERING DRAWING IS THE PROPRIETARY PROPERTY OF COMPAL ELECTRONICS, INC. AND CONTAINS CONFIDENTIAL AND TRADE SECRET INFORMATION. THIS SHEET MAY NOT BE TRANSFERED FROM THE CUSTODY OF THE COMPETENT DIVISION OF R&D DEPARTMENT EXCEPT AS AUTHORIZED BY COMPAL ELECTRONICS, INC. NEITHER THIS SHEET NOR THE INFORMATION IT CONTAINS MAY BE USED BY OR DISCLOSED TO ANY THIRD PARTY WITHOUT PRIOR WRITTEN CONSENT OF COMPAL ELECTRONICS, INC.

Compal Electronics, Inc.

Title: **AMP/Audio Jack**

Size | Document Number: **LA-3271P** | Rev: 0.4

Date: Monday, August 21, 2006 | Sheet 25 of 42

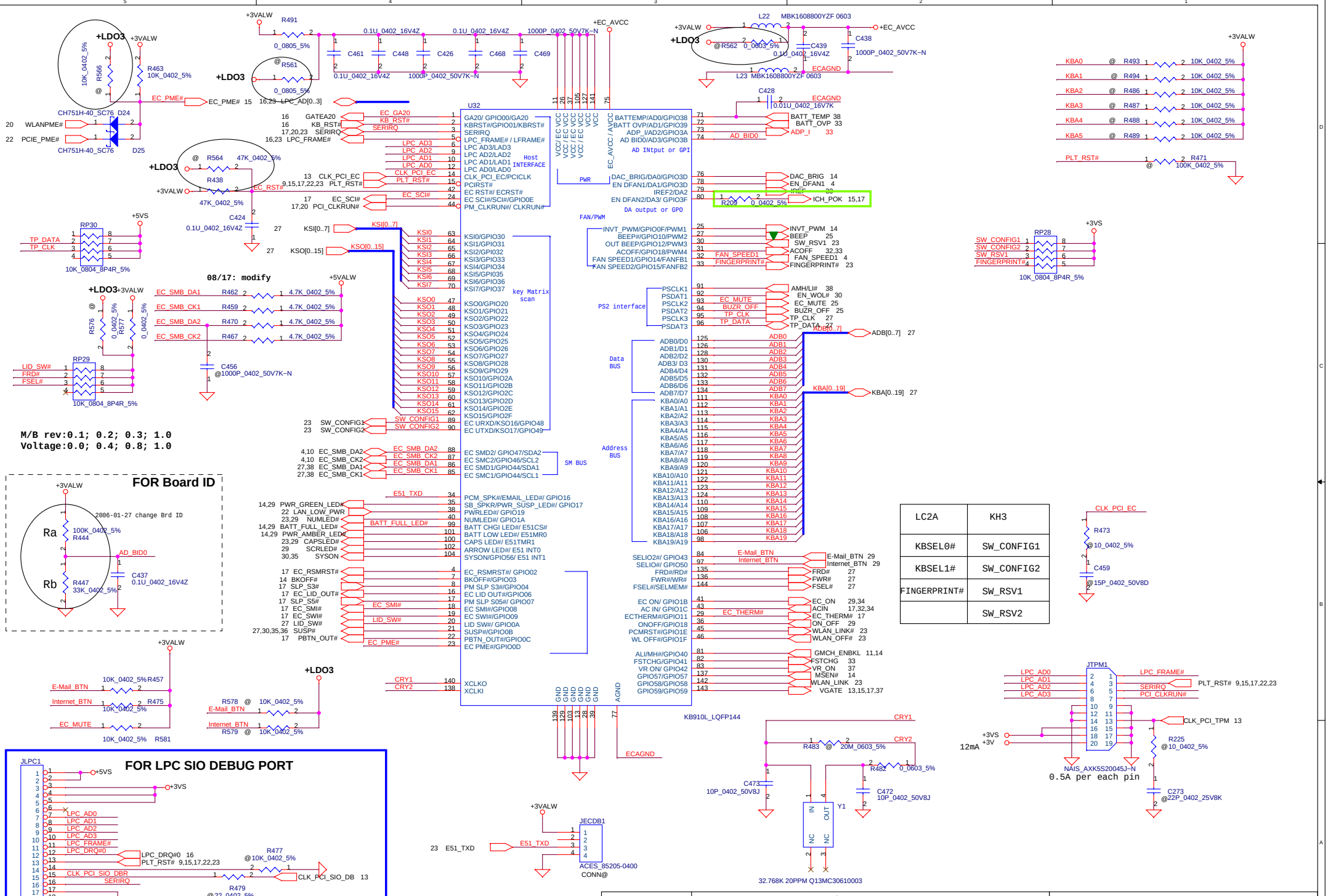

LC2A	KH3
KBSEL0#	SW_CONFIG1
KBSEL1#	SW_CONFIG2
FINGERPRINT#	SW_RSV1
	SW_RSV2

Security Classification	Compal Secret Data		
Issued Date	2005/12/1	Deciphered Date	2006/12/01

THIS SHEET OF ENGINEERING DRAWING IS THE PROPRIETARY PROPERTY OF COMPAL ELECTRONICS, INC. AND CONTAINS CONFIDENTIAL AND TRADE SECRET INFORMATION. THIS SHEET MAY NOT BE TRANSFERED FROM THE CUSTODY OF THE COMPETENT DIVISION OF R&D DEPARTMENT EXCEPT AS AUTHORIZED BY COMPAL ELECTRONICS, INC. NEITHER THIS SHEET NOR THE INFORMATION IT CONTAINS MAY BE USED BY OR DISCLOSED TO ANY THIRD PARTY WITHOUT PRIOR WRITTEN CONSENT OF COMPAL ELECTRONICS, INC.

Title: **KB910L/LIT SW**

Size: Custom | Document Number: **LA-3271P** | Rev: 0.4

Date: Monday, August 21, 2006 | Sheet 26 of 42

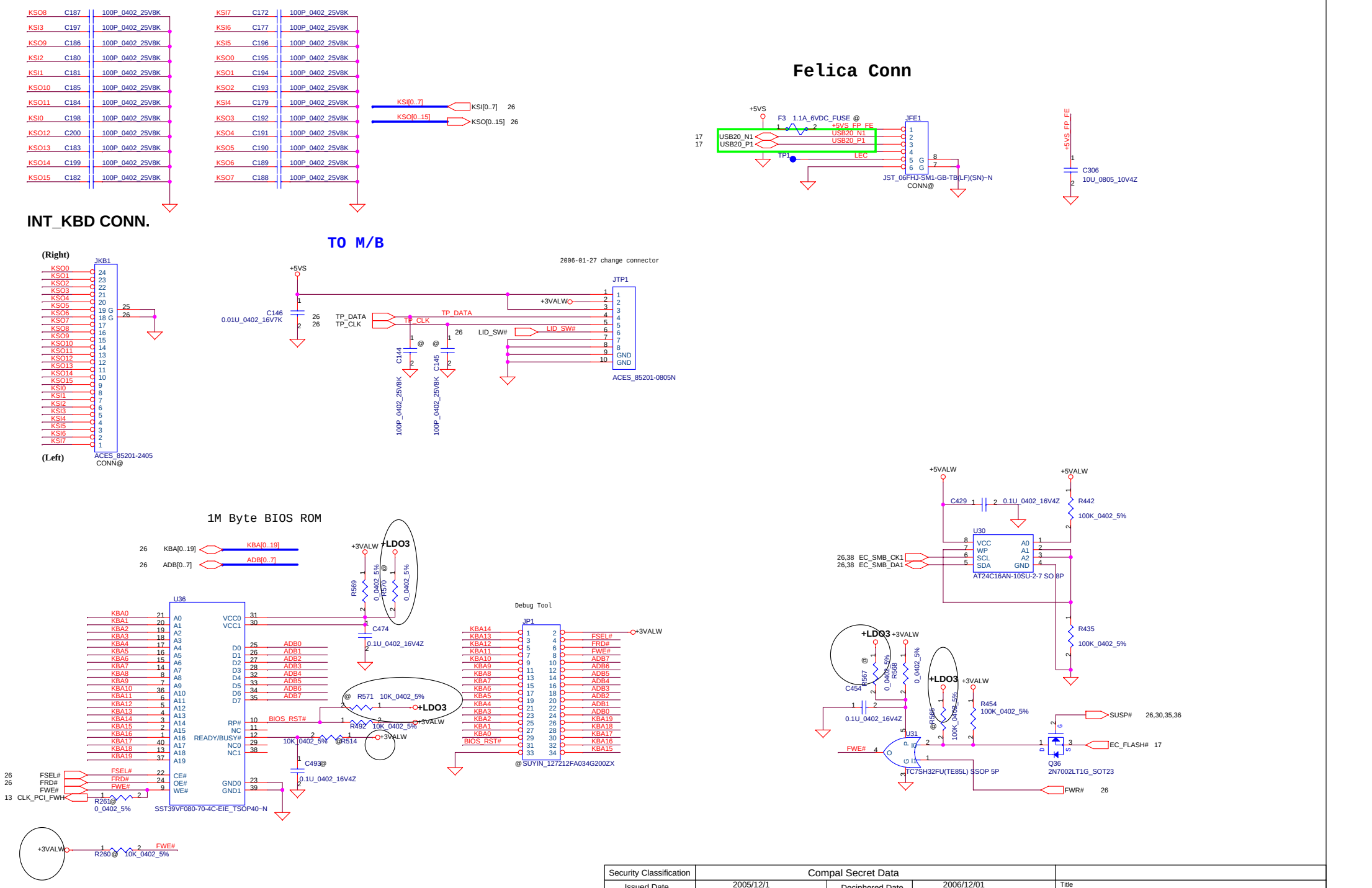

THIS SHEET OF ENGINEERING DRAWING IS THE PROPRIETARY PROPERTY OF COMPAL ELECTRONICS, INC. AND CONTAINS CONFIDENTIAL AND TRADE SECRET INFORMATION. THIS SHEET MAY NOT BE TRANSFERED FROM THE CUSTODY OF THE COMPETENT DIVISION OF R&D DEPARTMENT EXCEPT AS AUTHORIZED BY COMPAL ELECTRONICS, INC. NEITHER THIS SHEET NOR THE INFORMATION IT CONTAINS MAY BE USED BY OR DISCLOSED TO ANY THIRD PARTY WITHOUT PRIOR WRITTEN CONSENT OF COMPAL ELECTRONICS, INC.

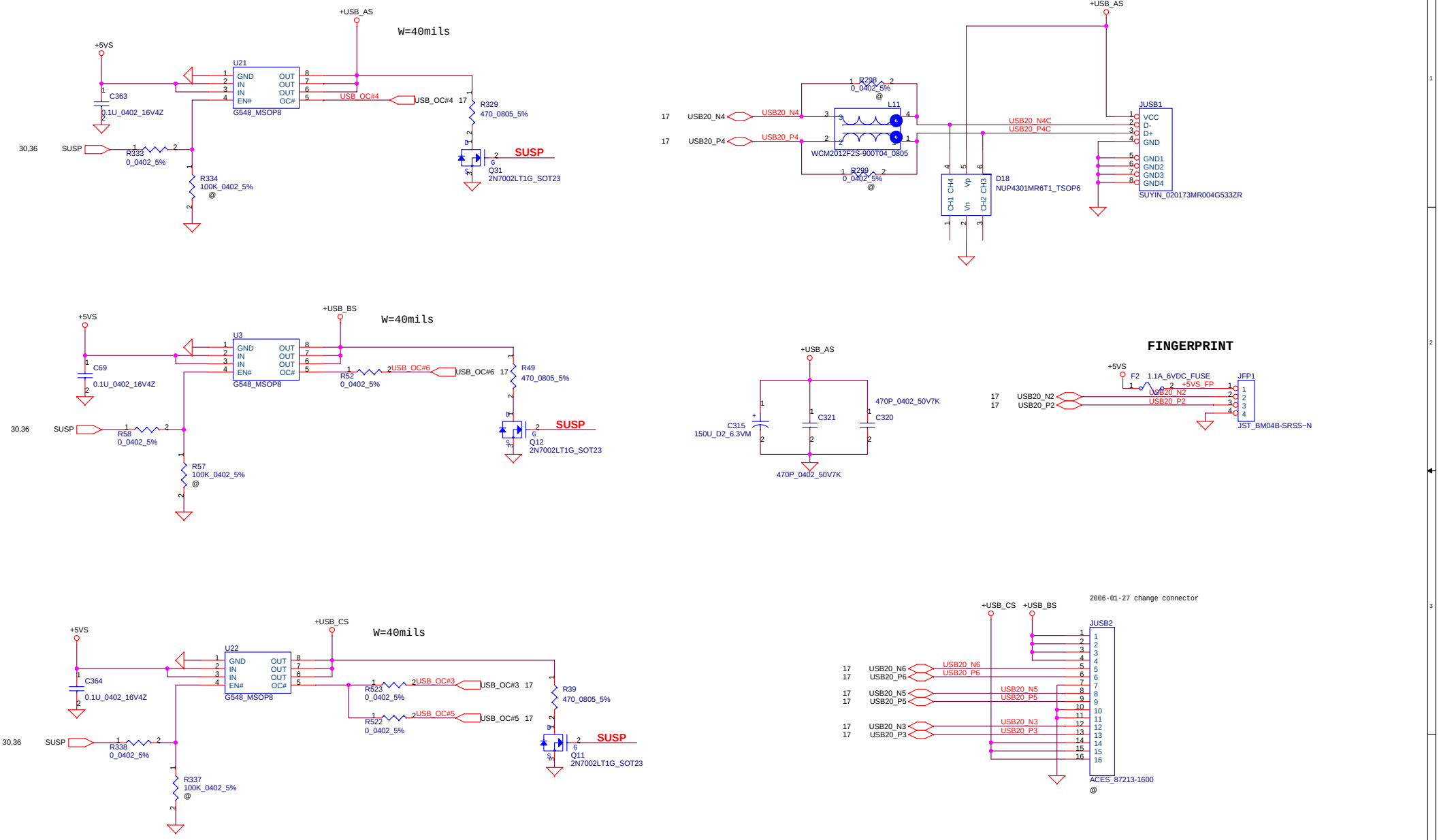

Security Classification	Compal Secret Data			Compal Electronics, Inc.
Issued Date	2005/12/1	Deciphered Date	2006/12/01	Title: USB Port
THIS SHEET OF ENGINEERING DRAWING IS THE PROPRIETARY PROPERTY OF COMPAL ELECTRONICS, INC. AND CONTAINS CONFIDENTIAL AND TRADE SECRET INFORMATION. THIS SHEET MAY NOT BE TRANSFERRED FROM THE CUSTODY OF THE COMPETENT DIVISION OF R&D DEPARTMENT EXCEPT AS AUTHORIZED BY COMPAL ELECTRONICS, INC. NEITHER THIS SHEET NOR THE INFORMATION IT CONTAINS MAY BE USED BY OR DISCLOSED TO ANY THIRD PARTY WITHOUT PRIOR WRITTEN CONSENT OF COMPAL ELECTRONICS, INC.				Size / Document Number: LA-3271P / Rev: 0.4
				Date: Monday, August 21, 2006 / Sheet 28 of 42

Power Button

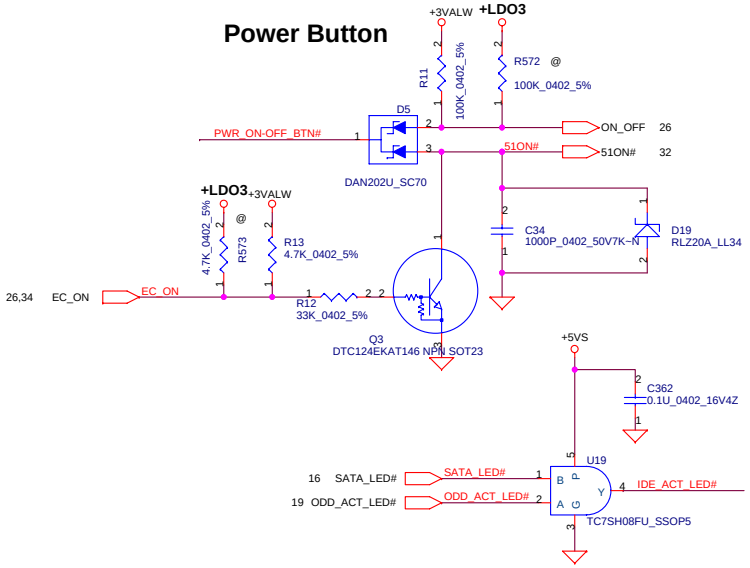

note:T1 minimum 15ms,T2 minimum 33ms/maximum 500ms, SUSP# goes to low after SB_PWRGD goes to low for power down.

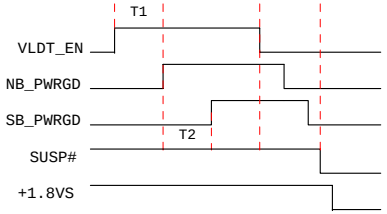

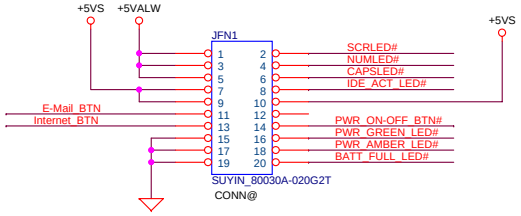

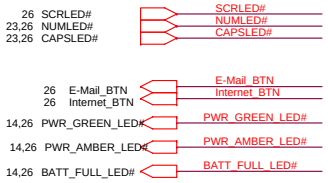

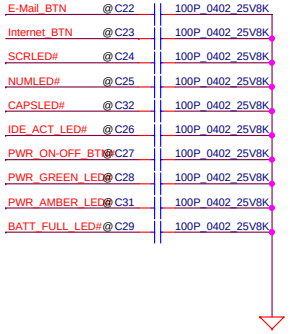

Security Classification	Compal Secret Data		
Issued Date	2005/12/1	Deciphered Date	2006/12/01

THIS SHEET OF ENGINEERING DRAWING IS THE PROPRIETARY PROPERTY OF COMPAL ELECTRONICS, INC. AND CONTAINS CONFIDENTIAL AND TRADE SECRET INFORMATION. THIS SHEET MAY NOT BE TRANSFERRED FROM THE CUSTODY OF THE COMPETENT DIVISION OF R&D DEPARTMENT EXCEPT AS AUTHORIZED BY COMPAL ELECTRONICS, INC. NEITHER THIS SHEET NOR THE INFORMATION IT CONTAINS MAY BE USED BY OR DISCLOSED TO ANY THIRD PARTY WITHOUT PRIOR WRITTEN CONSENT OF COMPAL ELECTRONICS, INC.

Title: **PWR_OK/BTN**

Size: Custom | Document Number: **LA-3271P** | Rev: 0.4

Date: Monday, August 21, 2006 | Sheet 29 of 42

+5VALW TO +5V

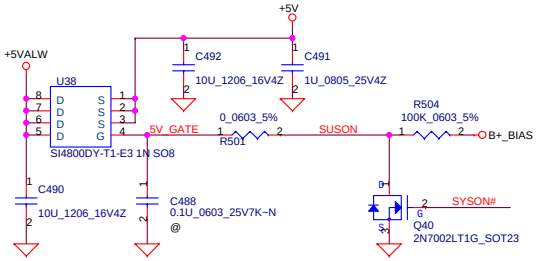

+5VALW TO +5VS

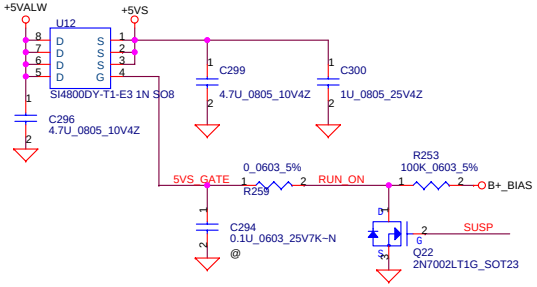

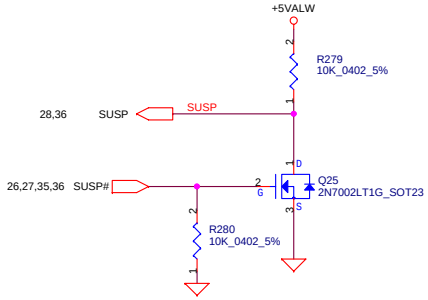

+3VALW TO +3V

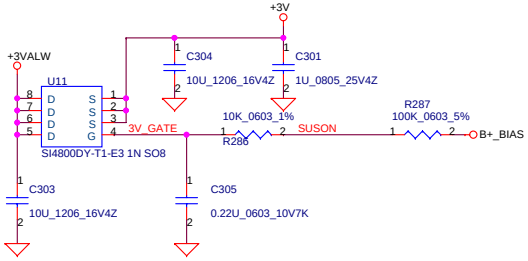

+3VALW TO +3VS

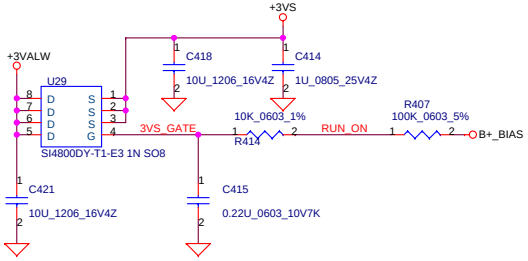

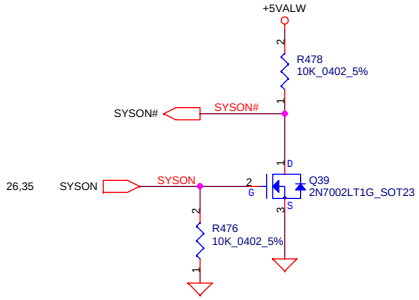

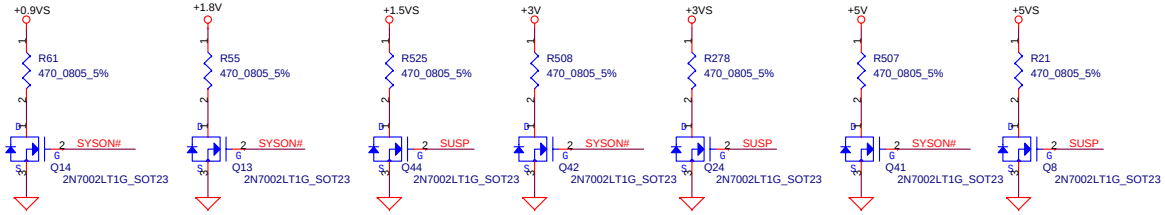

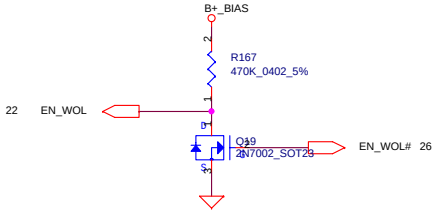

Security Classification	Compal Secret Data		
Issued Date	2005/12/1	Deciphered Date	2006/12/01

THIS SHEET OF ENGINEERING DRAWING IS THE PROPRIETARY PROPERTY OF COMPAL ELECTRONICS, INC. AND CONTAINS CONFIDENTIAL AND TRADE SECRET INFORMATION. THIS SHEET MAY NOT BE TRANSFERED FROM THE CUSTODY OF THE COMPETENT DIVISION OF R&D DEPARTMENT EXCEPT AS AUTHORIZED BY COMPAL ELECTRONICS, INC. NEITHER THIS SHEET NOR THE INFORMATION IT CONTAINS MAY BE USED BY OR DISCLOSED TO ANY THIRD PARTY WITHOUT PRIOR WRITTEN CONSENT OF COMPAL ELECTRONICS, INC.

Title: **DC Interface**

Size: Custom | Document Number: **LA-3271P** | Rev: 0.4

Date: Monday, August 21, 2006 | Sheet 30 of 42

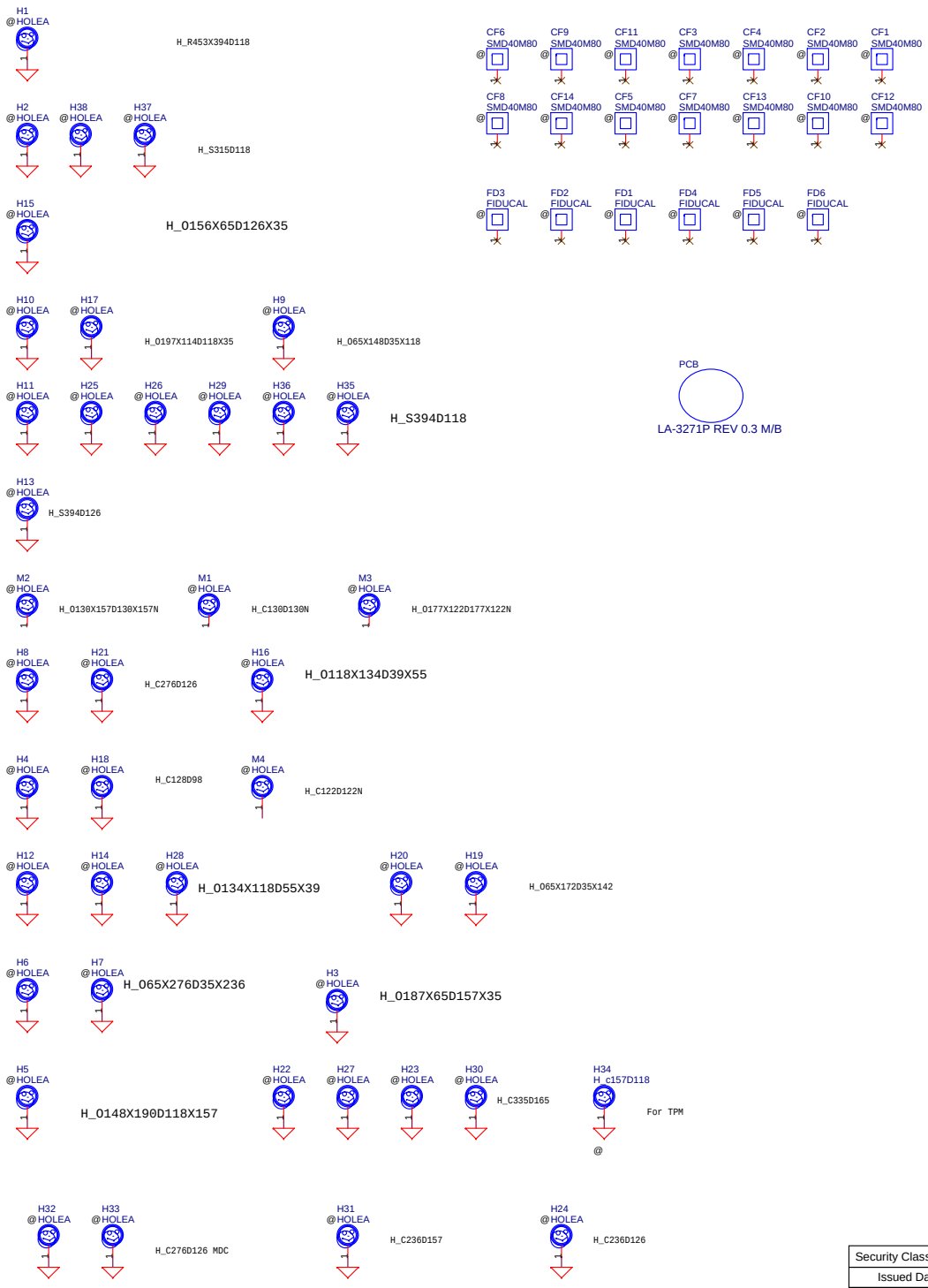

Security Classification	Compal Secret Data		
Issued Date	2005/12/1	Deciphered Date	2006/12/01

THIS SHEET OF ENGINEERING DRAWING IS THE PROPRIETARY PROPERTY OF COMPAL ELECTRONICS, INC. AND CONTAINS CONFIDENTIAL AND TRADE SECRET INFORMATION. THIS SHEET MAY NOT BE TRANSFERED FROM THE CUSTODY OF THE COMPETENT DIVISION OF R&D DEPARTMENT EXCEPT AS AUTHORIZED BY COMPAL ELECTRONICS, INC. NEITHER THIS SHEET NOR THE INFORMATION IT CONTAINS MAY BE USED BY OR DISCLOSED TO ANY THIRD PARTY WITHOUT PRIOR WRITTEN CONSENT OF COMPAL ELECTRONICS, INC.

Title: **Screws**

Size: Custom | Document Number: **LA-3271P** | Rev: 0.4

Date: Monday, August 21, 2006 | Sheet 31 of 42

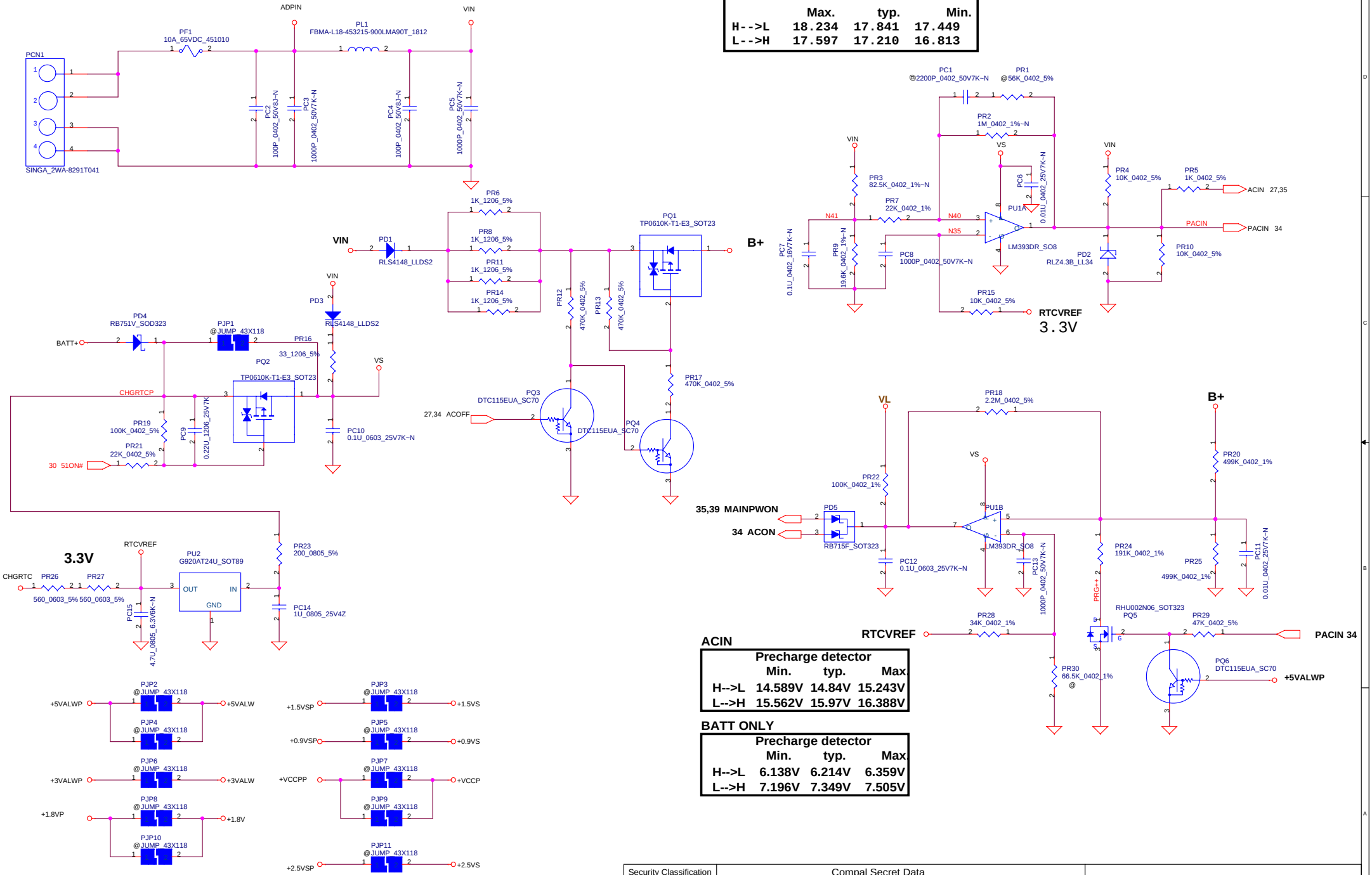

Vin Detector

	Max.	typ.	Min.
H-->L	18.234	17.841	17.449
L-->H	17.597	17.210	16.813

ACIN

Precharge detector

	Min.	typ.	Max
H-->L	14.589V	14.84V	15.243V
L-->H	15.562V	15.97V	16.388V

BATT ONLY

Precharge detector

	Min.	typ.	Max
H-->L	6.138V	6.214V	6.359V
L-->H	7.196V	7.349V	7.505V

Security Classification	Compal Secret Data		
Issued Date	2005/12/1	Deciphered Date	2006/12/01

THIS SHEET OF ENGINEERING DRAWING IS THE PROPRIETARY PROPERTY OF COMPAL ELECTRONICS, INC. AND CONTAINS CONFIDENTIAL AND TRADE SECRET INFORMATION. THIS SHEET MAY NOT BE TRANSFERRED FROM THE CUSTODY OF THE COMPETENT DIVISION OF R&D DEPARTMENT EXCEPT AS AUTHORIZED BY COMPAL ELECTRONICS, INC. NEITHER THIS SHEET NOR THE INFORMATION IT CONTAINS MAY BE USED BY OR DISCLOSED TO ANY THIRD PARTY WITHOUT PRIOR WRITTEN CONSENT OF COMPAL ELECTRONICS, INC.

Title: **DCIN / Precharge**

Size: Custom | Document Number: LA-3271P | Rev: 0.4

Date: Monday, August 21, 2006 | Sheet 32 of 42

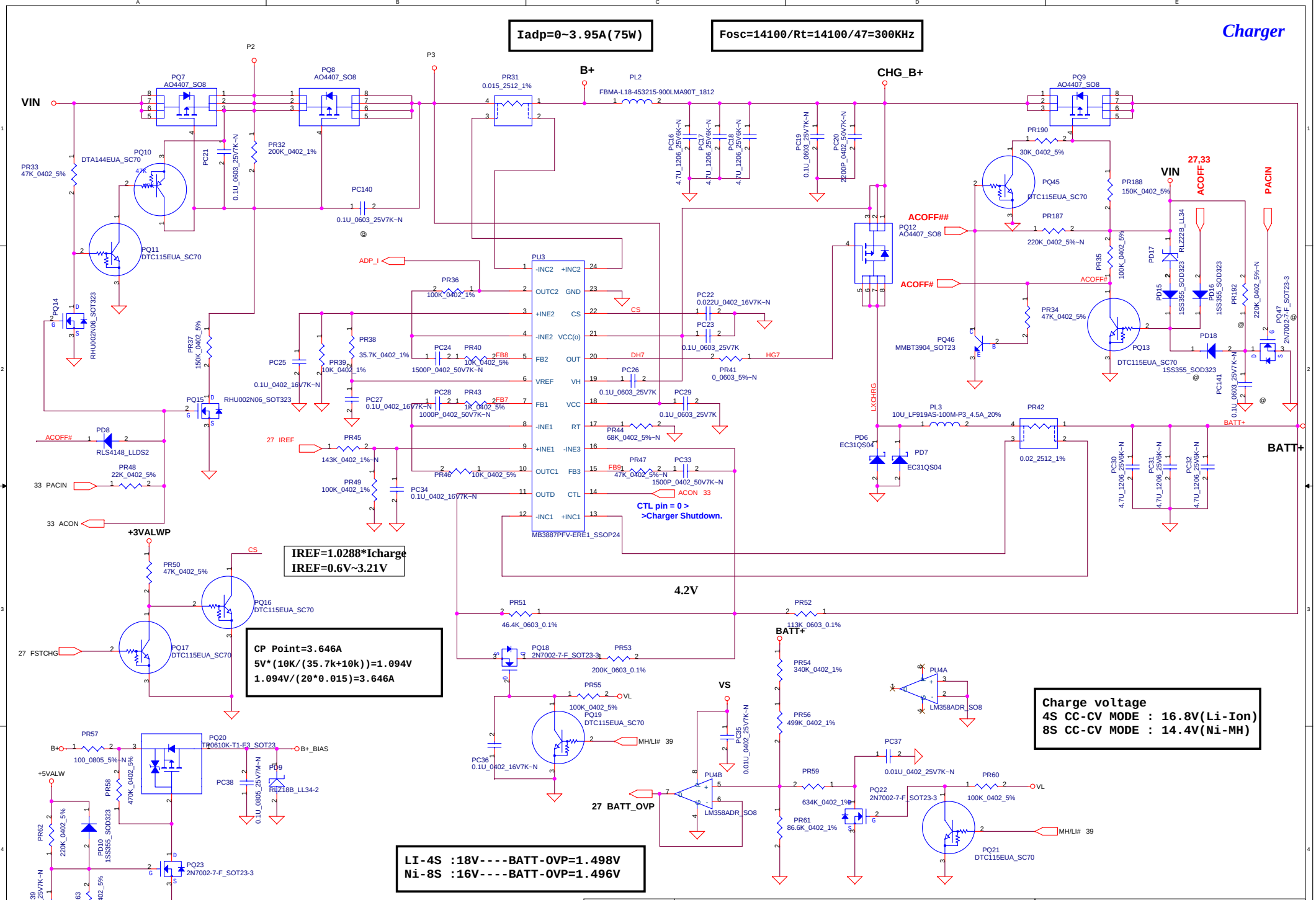

Security Classification	Compal Secret Data		
Issued Date	2005/12/1	Deciphered Date	2006/12/01

THIS SHEET OF ENGINEERING DRAWING IS THE PROPRIETARY PROPERTY OF COMPAL ELECTRONICS, INC. AND CONTAINS CONFIDENTIAL AND TRADE SECRET INFORMATION. THIS SHEET MAY NOT BE TRANSFERED FROM THE CUSTODY OF THE COMPETENT DIVISION OF R&D DEPARTMENT EXCEPT AS AUTHORIZED BY COMPAL ELECTRONICS, INC. NEITHER THIS SHEET NOR THE INFORMATION IT CONTAINS MAY BE USED BY OR DISCLOSED TO ANY THIRD PARTY WITHOUT PRIOR WRITTEN CONSENT OF COMPAL ELECTRONICS, INC.

Compal Electronics, Inc.

Title: PWR-Charger

Size: B | Document Number | Rev: 0.4

Date: Monday, August 21, 2006 | Sheet 33 of 42

+3.3VALWP/+5VALWP

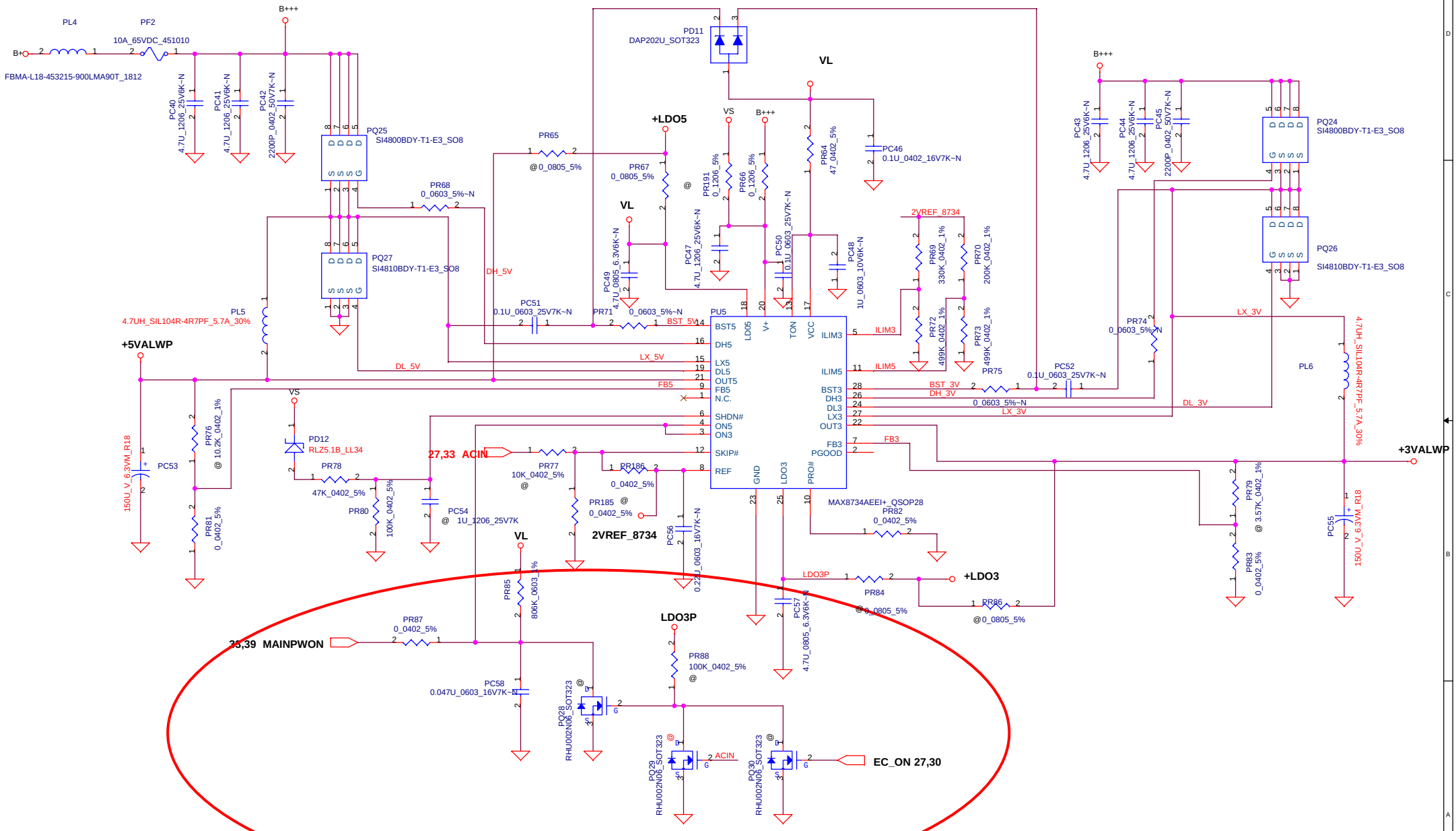

Security Classification	Compal Secret Data		
Issued Date	2005/12/1	Deciphered Date	2006/12/01

THIS SHEET OF ENGINEERING DRAWING IS THE PROPRIETARY PROPERTY OF COMPAL ELECTRONICS, INC. AND CONTAINS CONFIDENTIAL AND TRADE SECRET INFORMATION. THIS SHEET MAY NOT BE TRANSFERED FROM THE CUSTODY OF THE COMPETENT DIVISION OF R&D DEPARTMENT EXCEPT AS AUTHORIZED BY COMPAL ELECTRONICS, INC. NEITHER THIS SHEET NOR THE INFORMATION IT CONTAINS MAY BE USED BY OR DISCLOSED TO ANY THIRD PARTY WITHOUT PRIOR WRITTEN CONSENT OF COMPAL ELECTRONICS, INC.

Compal Electronics, Inc.

Title: +5V/+3V

Size: Custom | Document Number: LA-3271P | Rev: 0.4

Date: Monday, August 21, 2006 | Sheet 34 of 42

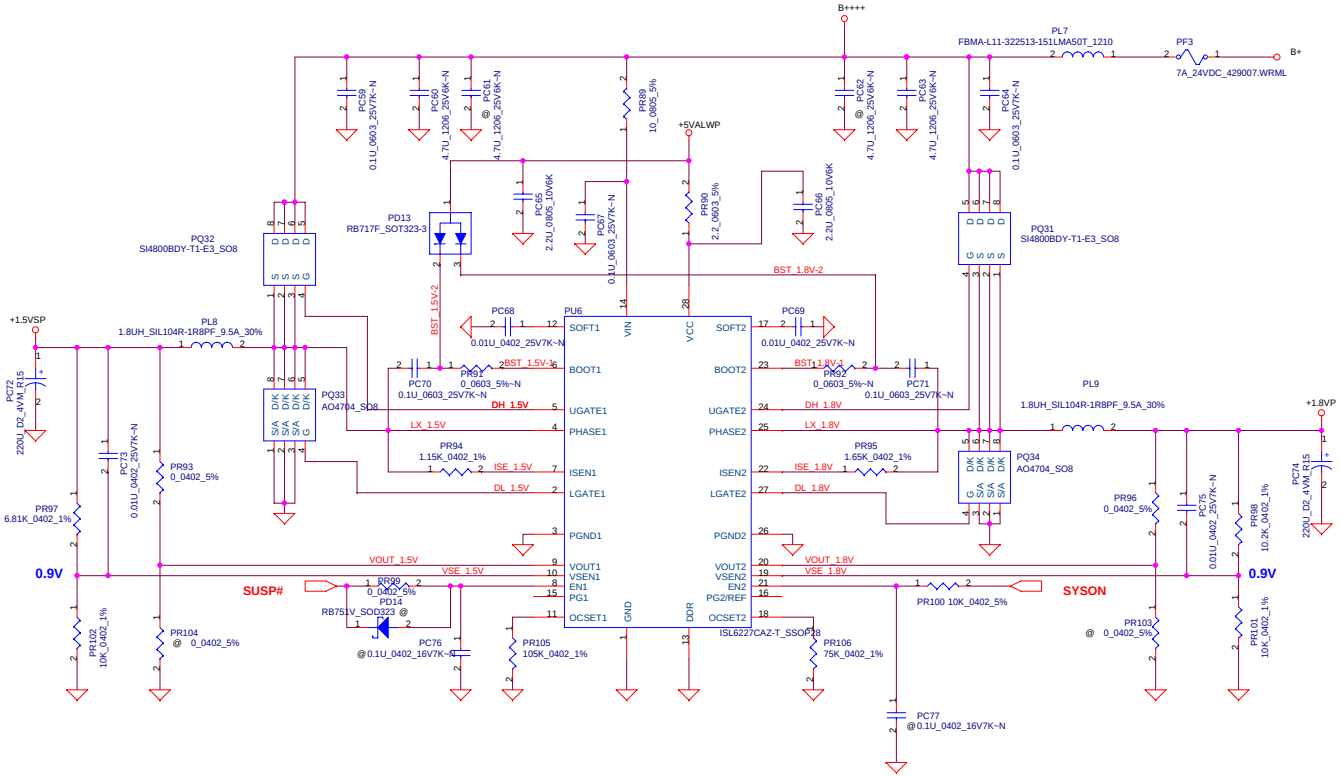

Security Classification	Compal Secret Data			Compal Electronics, Inc.
Issued Date	2005/12/1	Deciphered Date	2006/12/01	Title: +1.8V/+1.5V
				Size: Document Number: Rev 0.4
				Date: Monday, August 21, 2006 Sheet 35 of 42

THIS SHEET OF ENGINEERING DRAWING IS THE PROPRIETARY PROPERTY OF COMPAL ELECTRONICS, INC. AND CONTAINS CONFIDENTIAL AND TRADE SECRET INFORMATION. THIS SHEET MAY NOT BE TRANSFERED FROM THE CUSTODY OF THE COMPETENT DIVISION OF R&D DEPARTMENT EXCEPT AS AUTHORIZED BY COMPAL ELECTRONICS, INC. NEITHER THIS SHEET NOR THE INFORMATION IT CONTAINS MAY BE USED BY OR DISCLOSED TO ANY THIRD PARTY WITHOUT PRIOR WRITTEN CONSENT OF COMPAL ELECTRONICS, INC.

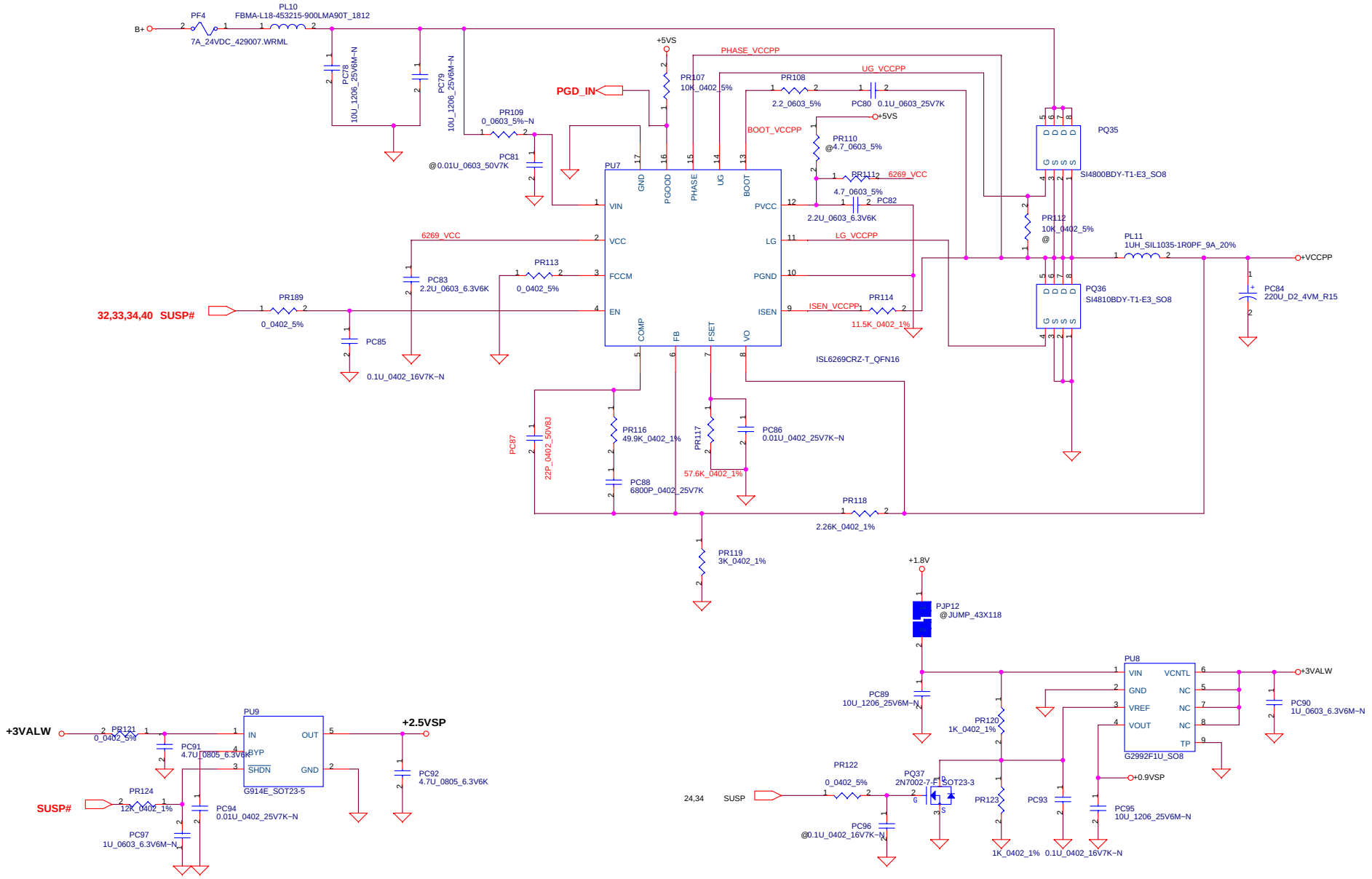

Security Classification	Compal Secret Data		
Issued Date	2005/12/1	Deciphered Date	2006/12/01

THIS SHEET OF ENGINEERING DRAWING IS THE PROPRIETARY PROPERTY OF COMPAL ELECTRONICS, INC. AND CONTAINS CONFIDENTIAL AND TRADE SECRET INFORMATION. THIS SHEET MAY NOT BE TRANSFERED FROM THE CUSTODY OF THE COMPETENT DIVISION OF R&D DEPARTMENT EXCEPT AS AUTHORIZED BY COMPAL ELECTRONICS, INC. NEITHER THIS SHEET NOR THE INFORMATION IT CONTAINS MAY BE USED BY OR DISCLOSED TO ANY THIRD PARTY WITHOUT PRIOR WRITTEN CONSENT OF COMPAL ELECTRONICS, INC.

Title: **+VCCPP/+2.5VSP/0.9VSP**

Size	Document Number	Rev
Custom	LA-3271P	0.4

Date: Monday, August 21, 2006 | Sheet 36 of 42

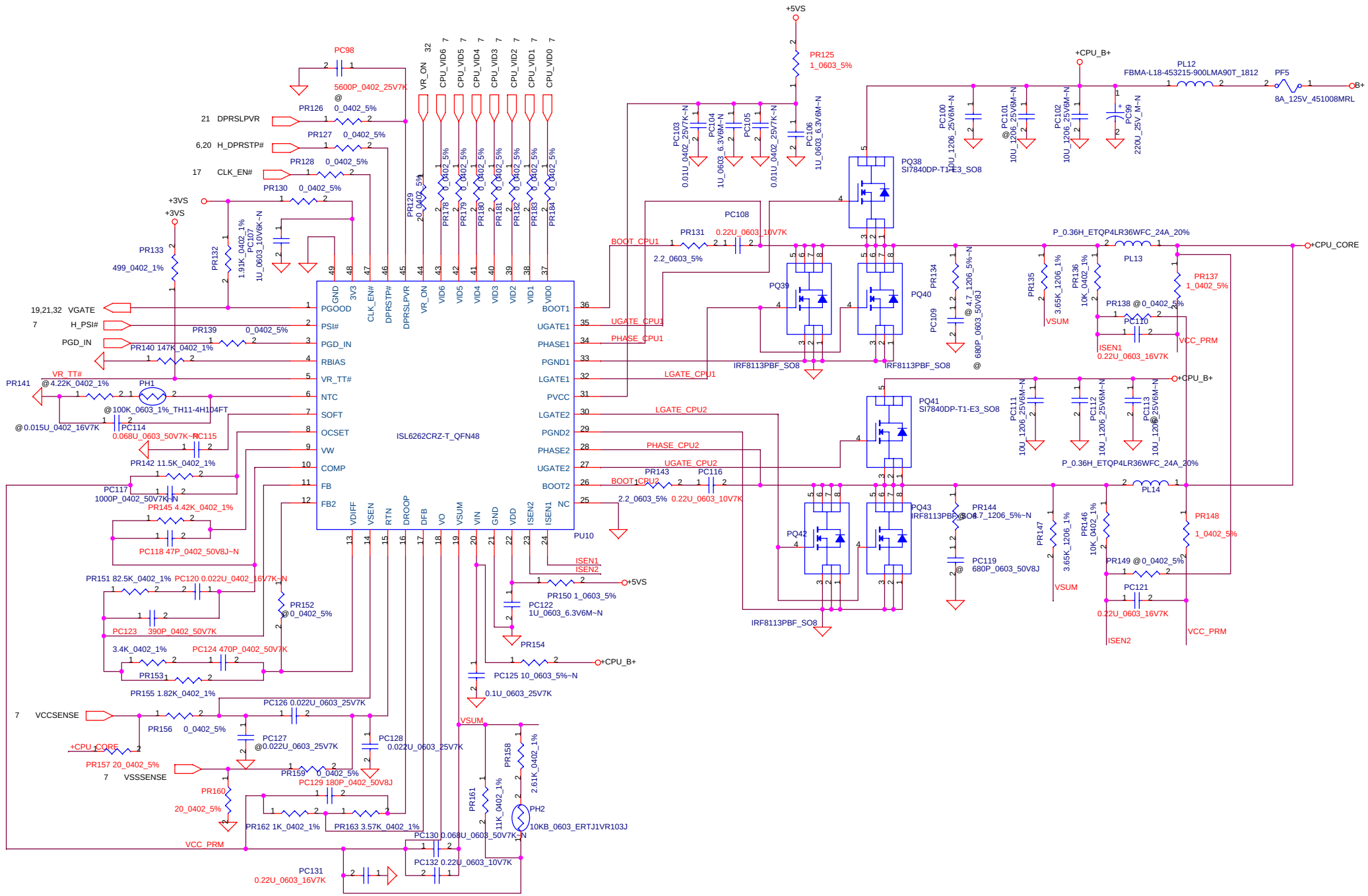

Security Classification	Compal Secret Data		
Issued Date	2005/12/1	Deciphered Date	2006/12/01

THIS SHEET OF ENGINEERING DRAWING IS THE PROPRIETARY PROPERTY OF COMPAL ELECTRONICS, INC. AND CONTAINS CONFIDENTIAL AND TRADE SECRET INFORMATION. THIS SHEET MAY NOT BE TRANSFERED FROM THE CUSTODY OF THE COMPETENT DIVISION OF R&D DEPARTMENT EXCEPT AS AUTHORIZED BY COMPAL ELECTRONICS, INC. NEITHER THIS SHEET NOR THE INFORMATION IT CONTAINS MAY BE USED BY OR DISCLOSED TO ANY THIRD PARTY WITHOUT PRIOR WRITTEN CONSENT OF COMPAL ELECTRONICS, INC.

Compal Electronics, Inc.

Title: **+CPU_CORE**

Size: Custom | Document Number: **LA-3271P** | Rev: 0.4

Date: Monday, August 21, 2006 | Sheet 37 of 42

Battery Connect/OTP

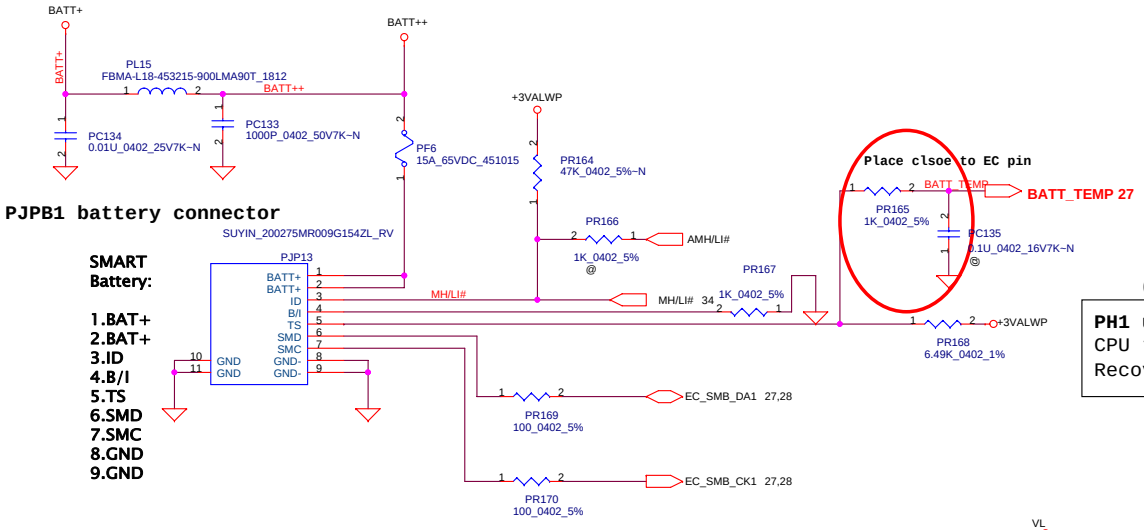

CPU

PH1 under CPU botten side :
CPU thermal protection at 90 +-3 degree C
Recovery at 50 +-3 degree C

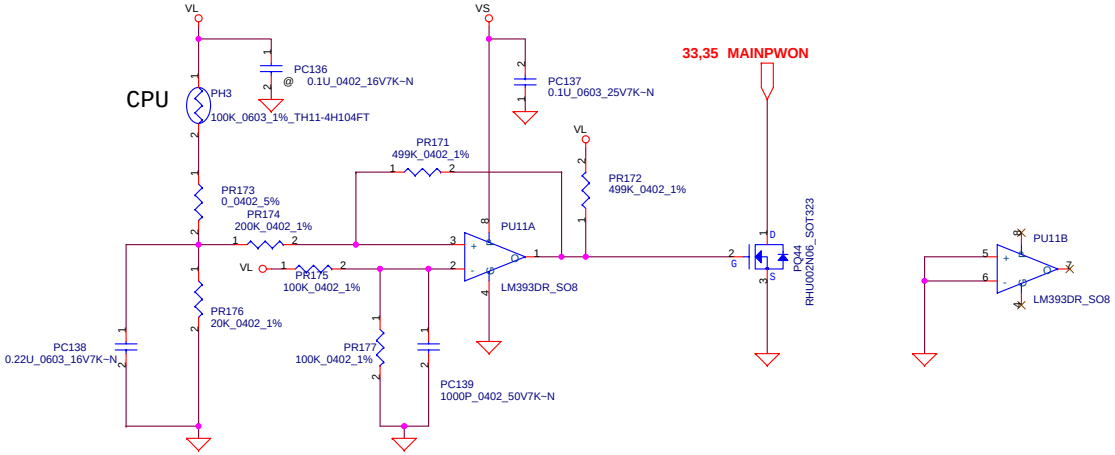

Security Classification	Compal Secret Data		
Issued Date	2005/12/1	Deciphered Date	2006/12/01

THIS SHEET OF ENGINEERING DRAWING IS THE PROPRIETARY PROPERTY OF COMPAL ELECTRONICS, INC. AND CONTAINS CONFIDENTIAL AND TRADE SECRET INFORMATION. THIS SHEET MAY NOT BE TRANSFERRED FROM THE CUSTODY OF THE COMPETENT DIVISION OF R&D DEPARTMENT EXCEPT AS AUTHORIZED BY COMPAL ELECTRONICS, INC. NEITHER THIS SHEET NOR THE INFORMATION IT CONTAINS MAY BE USED BY OR DISCLOSED TO ANY THIRD PARTY WITHOUT PRIOR WRITTEN CONSENT OF COMPAL ELECTRONICS, INC.

Title: **BATTERY CONN**

Size	Document Number	Rev
Custom	LA-3271P	0.4

Date: Monday, August 21, 2006 Sheet 38 of 42

Version Change List (P. I. R. List) Page 1

Item	Page#	Title	Date	Request Owner	Issue Description	Solution Description	Rev.
1	33	PWR-Charger	Apr. 7	Compal	add VIN OVP funtion	PR34 47K , PR35 100K , PR187 220K , PR188 4.7K PQ45 PQ13 SB301150000(DTC115EUA) , PQ46 SB339045100 (PMBT3904) , PD15 PD16 SC1SS355003 (1SS355) , PD17 SC4LZ22B006 (RLZ22B)	0.2
2	34	+3VALWP/+5VALWP	Apr. 27	Compal	Chang low noise skip mode to skip mode for decrease power consumption.	add PR185 0 ohm	0.2
3	38	BATTERY CONN	Apr. 27	Compal	Change EC confirm battery type method from battery ID pin to SMBUS.	PR166 non-POP	0.2
4	36	PWR-VCCPP/2.5V/0.9V	July. 17	Compal	add RC delay time resister for HW request	add PR189 0 ohm	0.3
5	34	+3VALWP/+5VALWP	Aug. 11	Compal	slove can not power on under adapter mode after add LD03 power plane	add PR191 0 ohm connect to VS NET	0.4
6	33	PWR-Charger	Aug. 7	Compal	decrease inrush current when PQ8 turn on	ADD PC139 0.1U	
7							
8							
10							
11							
12							
13							
14							
15							
16							
17							

Next: PR238, PC202, PQ56, PD42, PJP21

THIS SHEET OF ENGINEERING DRAWING IS THE PROPRIETARY PROPERTY OF COMPAL ELECTRONICS, INC. AND CONTAINS CONFIDENTIAL AND TRADE SECRET INFORMATION. THIS SHEET MAY NOT BE TRANSFERED FROM THE CUSTODY OF THE COMPETENT DIVISION OF R&D DEPARTMENT EXCEPT AS AUTHORIZED BY COMPAL ELECTRONICS, INC. NEITHER THIS SHEET NOR THE INFORMATION IT CONTAINS MAY BE USED BY OR DISCLOSED TO ANY THIRD PARTY WITHOUT PRIOR WRITTEN CONSENT OF COMPAL ELECTRONICS, INC.

Compal Electronics, Inc.

Title: **PW-PIR**

Size: Document Number: **LA-3271P** Rev: 0.4

Date: Monday, August 21, 2006 Sheet 39 of 42

Version Change List (P. I. R. List) Page 1/1

Item	Page#	Title	Date	Request Owner	Issue Description	Solution Description	Rev.
1	14	CRT Conn.& LCD Conn.	Mar. 28th	COMPAL	Add LVDS-EDID CLK&DAT pull high	Add pull high to +3VS for EDID_CLK & EDID_DAT	0.2
2	26	EC KB910L/REED SW/TPM1.2	Mar. 28th	COMPAL	Add ICH_POK & GMCH_ENBKL to pin 80& 81	Add ICH_POK & GMCH_ENBKL to pin 80& 81	0.2
3	27	KB / TouchPad / BIOS/Felica	Apr. 2nd	COMPAL	Feloca can't detect.	Swap pin 2& 3 (pin2->D-; pin3->D+)	0.2
4	14	CRT Conn.& LCD Conn.	Apr. 2nd	COMPAL	White screen when boot.	Use NB to control LCD backlight	0.2
5	13	Clock Generator	Apr. 2nd	COMPAL	Cardbus can't detect.	Add cardbud CLK.	0.2
6	13	Clock Generator	Apr. 2nd	COMPAL	CPU_CLK 266MHZ issue.	Take off R894	0.2
7	22	BCM5787M-GLAN	Apr. 2nd	COMPAL	LAN can't detect .	Swap VMIN(pin53) & VAUX(pin54) power plan	0.2
8	22	BCM5787M-GLAN	Apr. 2nd	COMPAL	EEPROM can't detect .	Change R868 to 0 ohm	0.2
9	13	Clock Generator	Apr. 2nd	COMPAL	+3VS leakage issue	Add D15, D19.	0.2
10	19	HDD/CDROM	Apr. 2nd	COMPAL	HD can't detect	SATA TX & RX pin swap	0.2
11	20	CardBus/R5C841/R5C811(1/2)	Apr. 2nd	COMPAL	cardbus of device manager show "!"	UDIO3 & 4 change to GND for HW select	0.2
12	6	Yonah bypass	Apr. 2nd	COMPAL	Use 2 330U for Decoupling	Take off C677 & C680	0.2
13	28	USB Conn/FINGERPRINT	Apr .20th	COMPAL	Fingerprint can;t be detect	Swap Fingerprint signal for correct pin define	0.2
14	26	EC KB910L/REED SW/TPM1.2	Apr. 20th	COMPAL	+5VS leakage	Chaneg EC_MUTE pull high to +3VS	0.2
15	22	BCM5787M-GLAN	Apr. 27th	NEC	Material change for same type	Change L15 to CHB1608U301	0.2
16	23	Mini card & LAN CONN	Apr. 27th	COMPAL	Change R319 to LAN vender suggestion one	Change R319 to CHB1608U301	0.2
17	13	Clock Generator	May. 4th	COMPAL	Dubug code '28' issue	Take off D12 & D13, mount Q20, Q21	0.3
18	26	EC KB910L/REED SW/TPM1.2	May. 17th	COMPAL	+3VS leakage issue	Modify EC_MUTE pull high to +3VALW	0.3
19	28	USB Conn/FINGERPRINT	May. 17th	NEC	For USB port 5 OC protect	Add USB_OC#5 to U22	0.3
20	14	CRT Conn.& LCD Conn.	May. 17th	EMI	For EMI request	Change L8, L9, L10 form FCM2012C-800 to BK2125LL121-T	0.3
21	30	Power CTRL/ RESET CKT	May. 17th	COMPAL	For +1.5VS discharge	Add +1.5VS discharge circuit. (Q44)	0.3
22	18	ICH7-M(4/4)_POWER&GND	May. 17th	COMPAL	For SB +3VALW modify to +3V reserve by jump select for power consumption save in S5.	Add PJP15 & PJP15 for +3VALW and +3V select for SB.	0.3
23	13	Clock Generator	May. 17th	COMPAL	For CLK SPEC define	Modify R381, R382 form 0 to 24ohm	0.3
24	4	Yonah(1/2)-GTL/ITP-XDP	May. 23th	NEC	For FAN power issue prevent	Modify R350 PAD size to 1206 for Fuse.	0.3
25	14	CRT Conn.& LCD Conn.	May. 28th	COMPAL	H_SYNC, V_SYNC over/under shoot issue	Add R526 & R527.	0.3
26	14	CRT Conn.& LCD Conn.	Jun. 1st	COMPAL	Fine tune LCDVDD discharge time.	Modify R14 to 300 ohm, R30 to 100K ohm, R25 to 10K.	0.3
27	25	AMP./ Audio Jack	Jun. 6th	COMPAL	For PCMCIA-Modem card dial tone too samll issue.	Modify Buzzer circuit.	0.3
28	23	Mini card & LAN CONN	Jun. 13th	NEC	For both INTEL GOLAN and ALPS WLAN LED function OK.	Modify circuit and use 2 DIP Switch to control.	0.3
29	26	EC KB910L/REED SW/TPM1.2	Aug. 10th	COMPAL	For S5 power consumption	Added LDO3 power plan	
30	14	CRT Conn.& LCD Conn.	Aug. 10th	COMPAL	For V/H sync delay	Del R526 & R527.Change C308 C311	
31	25	AMP./ Audio Jack	Aug. 10th	COMPAL	For EMI request	Add C548 & C549.	
32	23	Mini card & LAN CONN	Aug. 10th	COMPAL	For LAN immunity	Change R556,R557,R558,R559 to 0ohm	
	23	Mini card & LAN CONN	Aug. 10th	NEC	For both INTEL GOLAN and ALPS WLAN LED control by software	Add U39	

AK1 Power block

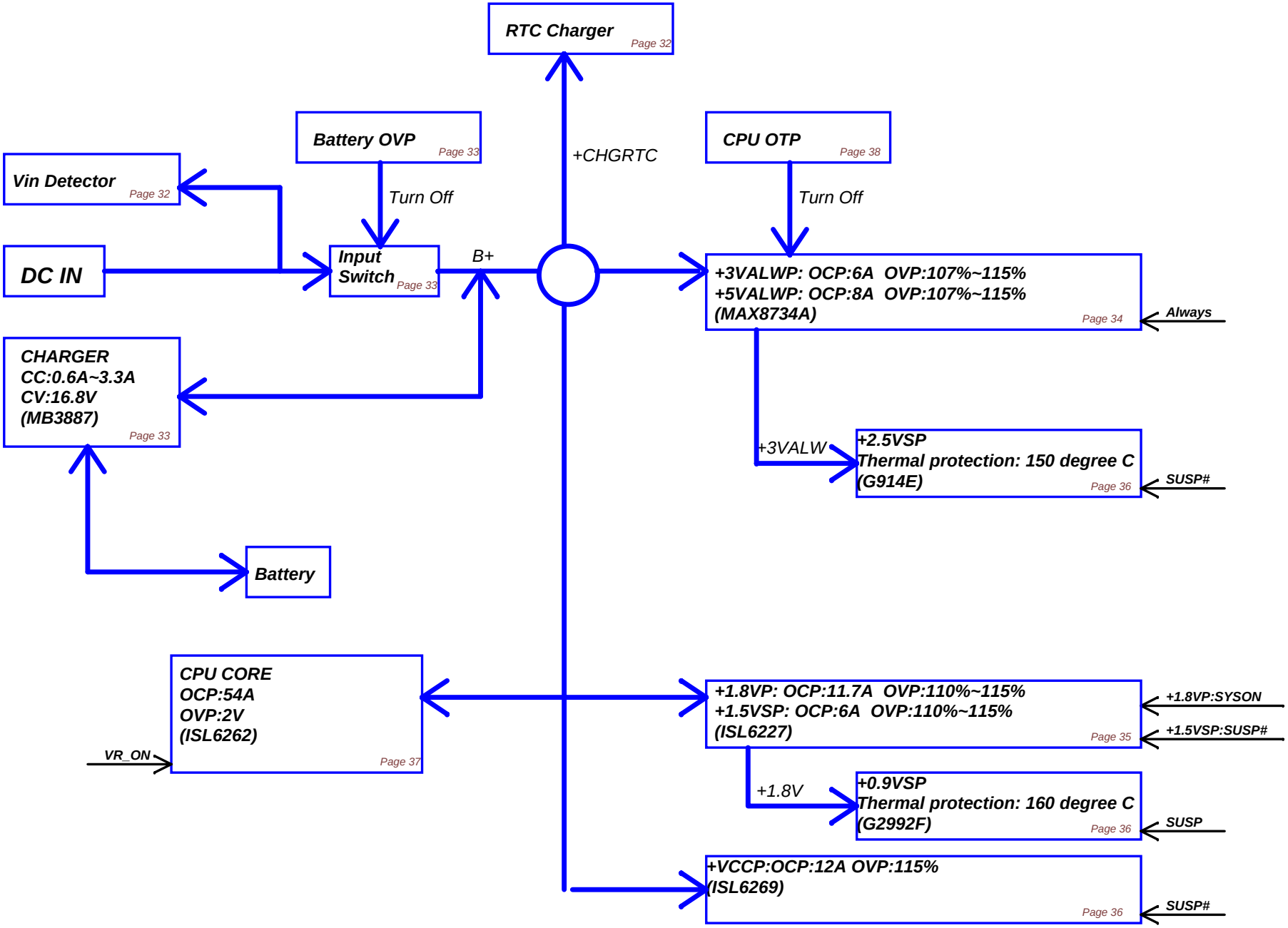

Security Classification	Compal Secret Data		
Issued Date	2005/12/1	Deciphered Date	2006/12/01

THIS SHEET OF ENGINEERING DRAWING IS THE PROPRIETARY PROPERTY OF COMPAL ELECTRONICS, INC. AND CONTAINS CONFIDENTIAL AND TRADE SECRET INFORMATION. THIS SHEET MAY NOT BE TRANSFERED FROM THE CUSTODY OF THE COMPETENT DIVISION OF R&D DEPARTMENT EXCEPT AS AUTHORIZED BY COMPAL ELECTRONICS, INC. NEITHER THIS SHEET NOR THE INFORMATION IT CONTAINS MAY BE USED BY OR DISCLOSED TO ANY THIRD PARTY WITHOUT PRIOR WRITTEN CONSENT OF COMPAL ELECTRONICS, INC.

Compal Electronics, Inc.

Title: SCHEMATIC, M/B LA-3271P

Size | Document Number | Rev 0.4

Date: Monday, August 21, 2006 | Sheet 41 of 42

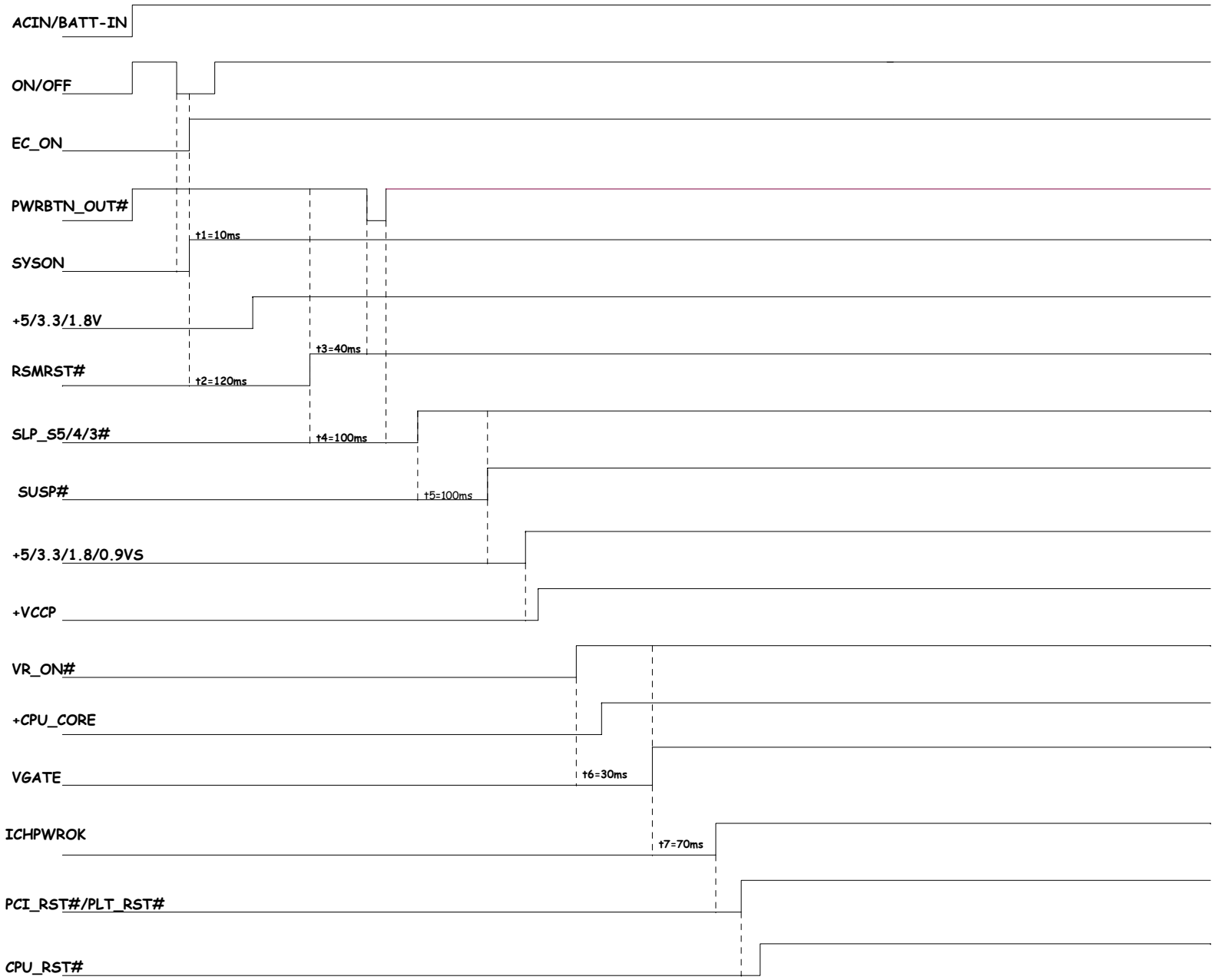

Compal Electronics, Inc.

Security Classification	Compal Secret Data		
Issued Date	2005/12/1	Deciphered Date	2006/12/01

THIS SHEET OF ENGINEERING DRAWING IS THE PROPRIETARY PROPERTY OF COMPAL ELECTRONICS, INC. AND CONTAINS CONFIDENTIAL AND TRADE SECRET INFORMATION. THIS SHEET MAY NOT BE TRANSFERED FROM THE CUSTODY OF THE COMPETENT DIVISION OF R&D DEPARTMENT EXCEPT AS AUTHORIZED BY COMPAL ELECTRONICS, INC. NEITHER THIS SHEET NOR THE INFORMATION IT CONTAINS MAY BE USED BY OR DISCLOSED TO ANY THIRD PARTY WITHOUT PRIOR WRITTEN CONSENT OF COMPAL ELECTRONICS, INC.

Title: **Power Sequence**

Size: | Document Number: **LA-3271P** | Rev: 0.4

Date: Monday, August 21, 2006 | Sheet 42 of 42