Potomac 10SG

MP BUILD

2008 0123

INVENTEC			
TITLE Potomac 10SG			
SIZE A3	CODE CS	DOC. NUMBER Model_No	REV X01
CHANGE by Drawer_Name	24-Jan-2008	SHEET 1 OF 63	

TABLE OF CONTENTS

PAGE	PAGE	PAGE
1.COVER PAGE	33. HDMI TRANSMITTER	58.LED(M/B) & HOTKEY/B CONN
2.INDEX	34.HDMI CONN & CIR	59.Fingerprint & Power Button
3.BLOCK DIAGRAM	35.S/B ICH8 1	60.FM tuner
4.POWER SEQUENCE BLOCK	36.S/B ICH8 2	61.KILL SWITCH& HALL SENSOR
5-12.SYSTEM POWER	37.S/B ICH8 3	62.DRILL HOLE
13.CLOCK GENERATOR	38.S/B ICH8 4	63.EMI
14.CPU Merom1	39.S/B ICH8 5	
15.CPU Merom2	40.SATA CONN	
16.CPU Merom3	41.USB CONN	
17.CPU Merom4	42.Felica & Camera CONN & Fingerprint	
18.FAN & THERMAL CONTROLLER	43.Bluetooth CONN	
19.N/B Crestline 1	44.EC	
20.N/B Crestline 2	45.K/B & TP/B CONN	
21.N/B Crestline 3	46.AZALIA CODEC	
22.N/B Crestline 4	47.AUDIO AMP	
23.N/B Crescline 5	48.Audio JACKs	
24.N/B Crestline 6	49.LAN Controller	
25.N/B Crestline 7	50.RJ45 & Transformer	
26.DDR2 DIMM0	51.ODD CONN	
27.DDR2 DIMM1	52.1394/Cardreader Controller	
28.DDR DAMPING	53.5 in 1 & 1394 CONN	
29.MXM CONN	54.Express Card CONN	
30.CRT CONN	55.ROBSON & WLAN	
31.S-VIDEO CONN	56.Broadcom Accelerator	
32.LCM CONN	57.MDC 1.5 CONN	

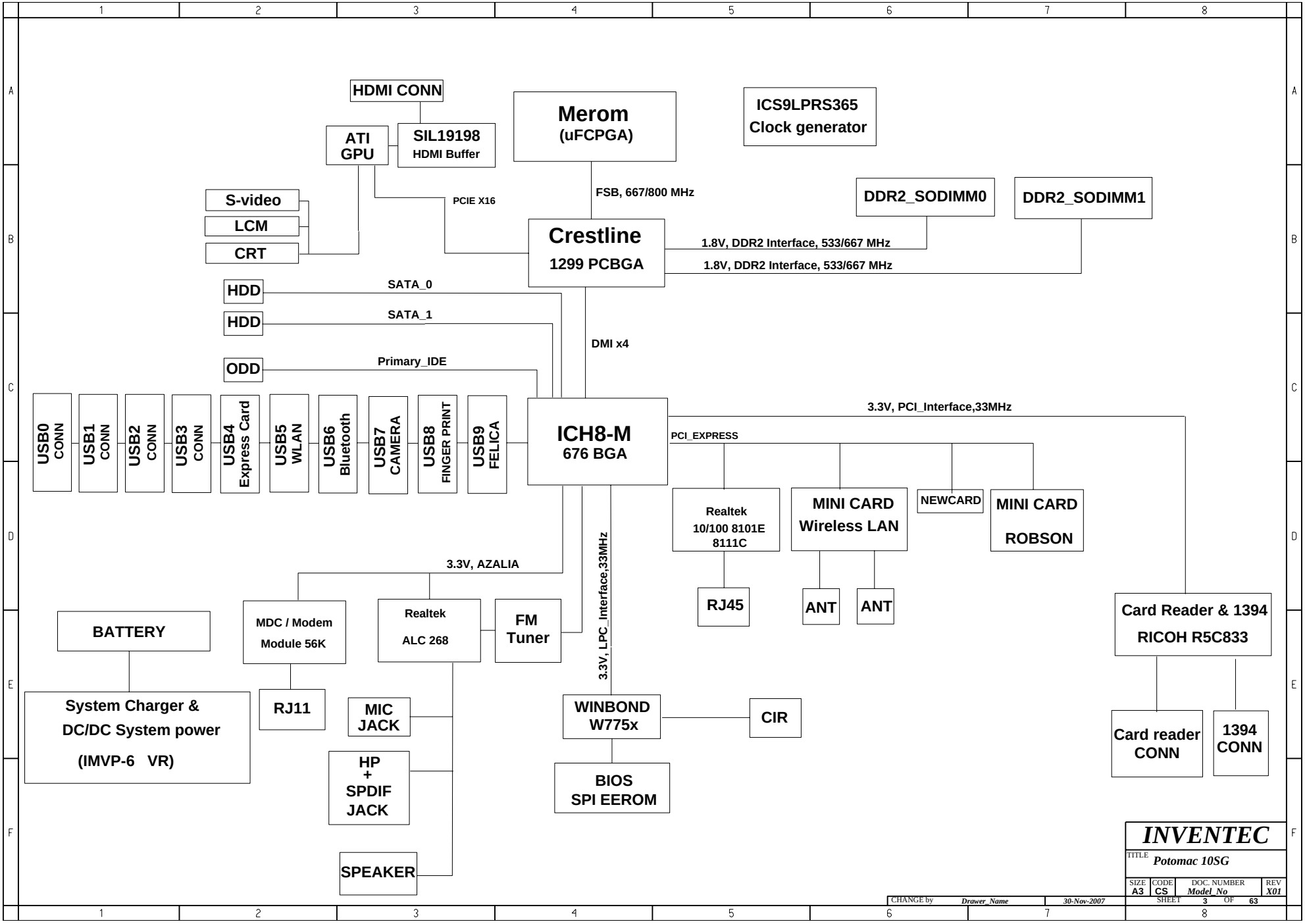
HDMI CONN
ATI GPU
SIL19198 HDMI Buffer
Merom (uFCPGA)
ICS9LPRS365 Clock generator
S-video
LCM
CRT
PCIE X16
FSB, 667/800 MHz
DDR2_SODIMM0
DDR2_SODIMM1
Crestline 1299 PCBGA
1.8V, DDR2 Interface, 533/667 MHz
1.8V, DDR2 Interface, 533/667 MHz
HDD
SATA_0
HDD
SATA_1
DMI x4
ODD
Primary_IDE
USB0 CONN
USB1 CONN
USB2 CONN
USB3 CONN
USB4 Express Card
USB5 WLAN
USB6 Bluetooth
USB7 CAMERA
USB8 FINGER PRINT
USB9 FELICA
ICH8-M 676 BGA
3.3V, PCI_Interface,33MHz
PCI_EXPRESS
Realtek 10/100 8101E 8111C
MINI CARD Wireless LAN
NEWCARD
MINI CARD ROBSON
RJ45
ANT
ANT
3.3V, AZALIA
3.3V, LPC_Interface,33MHz
BATTERY
MDC / Modem Module 56K
Realtek ALC 268
FM Tuner
Card Reader & 1394 RICOH R5C833
System Charger & DC/DC System power (IMVP-6 VR)
RJ11
MIC JACK
WINBOND W775x
CIR
HP + SPDIF JACK
BIOS SPI EEROM
Card reader CONN
1394 CONN
SPEAKER
INVENTEC
TITLE Potomac 10SG
SIZE A3
CODE CS
DOC. NUMBER Model_No
REV X01
SHEET 3 OF 63
CHANGE by Drawer_Name
30-Nov-2007

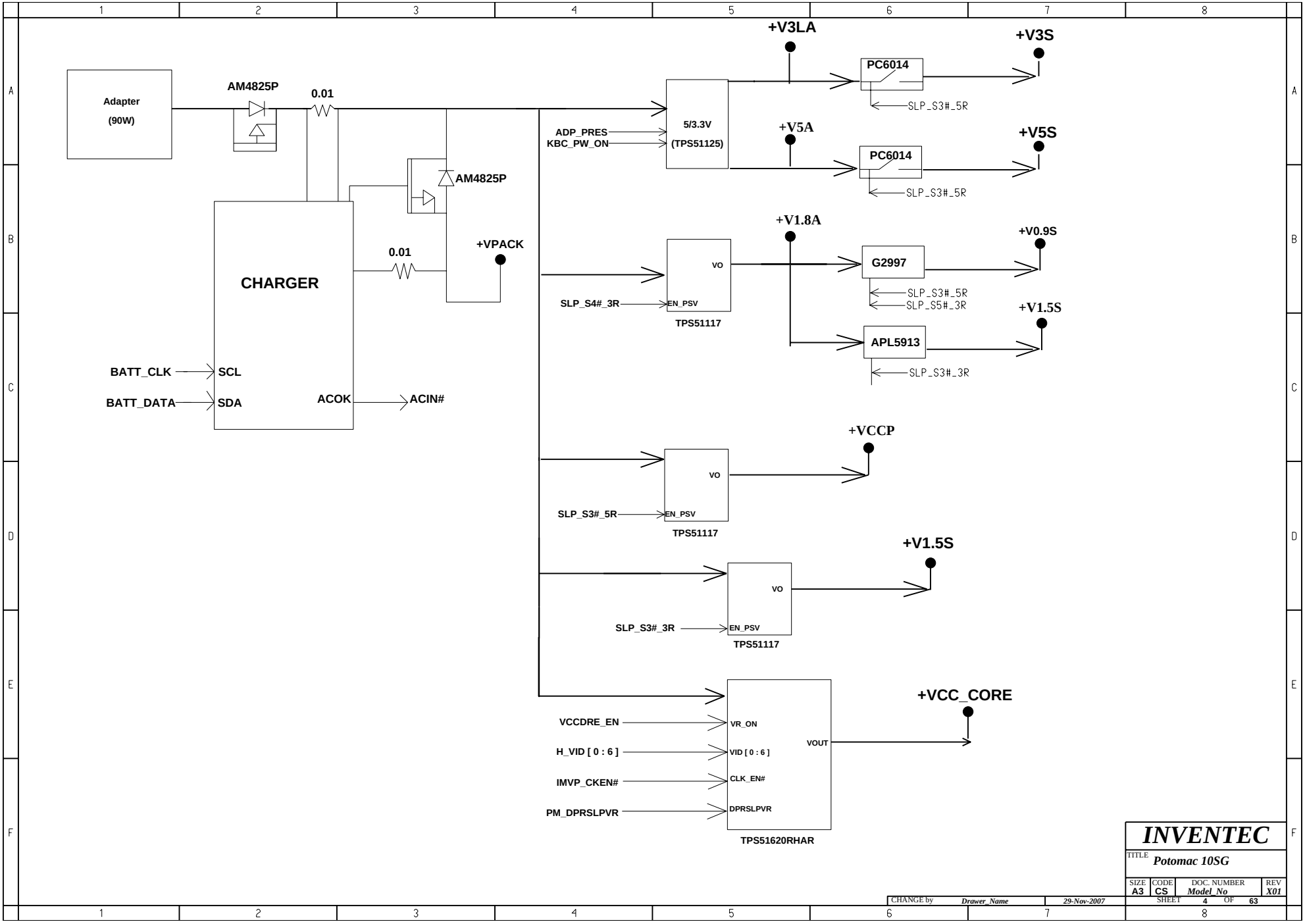

INVENTEC			
TITLE Potomac 10SG			
SIZE A3	CODE CS	DOC. NUMBER Model_No	REV X01
CHANGE by Drawer_Name	29-Nov-2007	SHEET 4 OF 63	

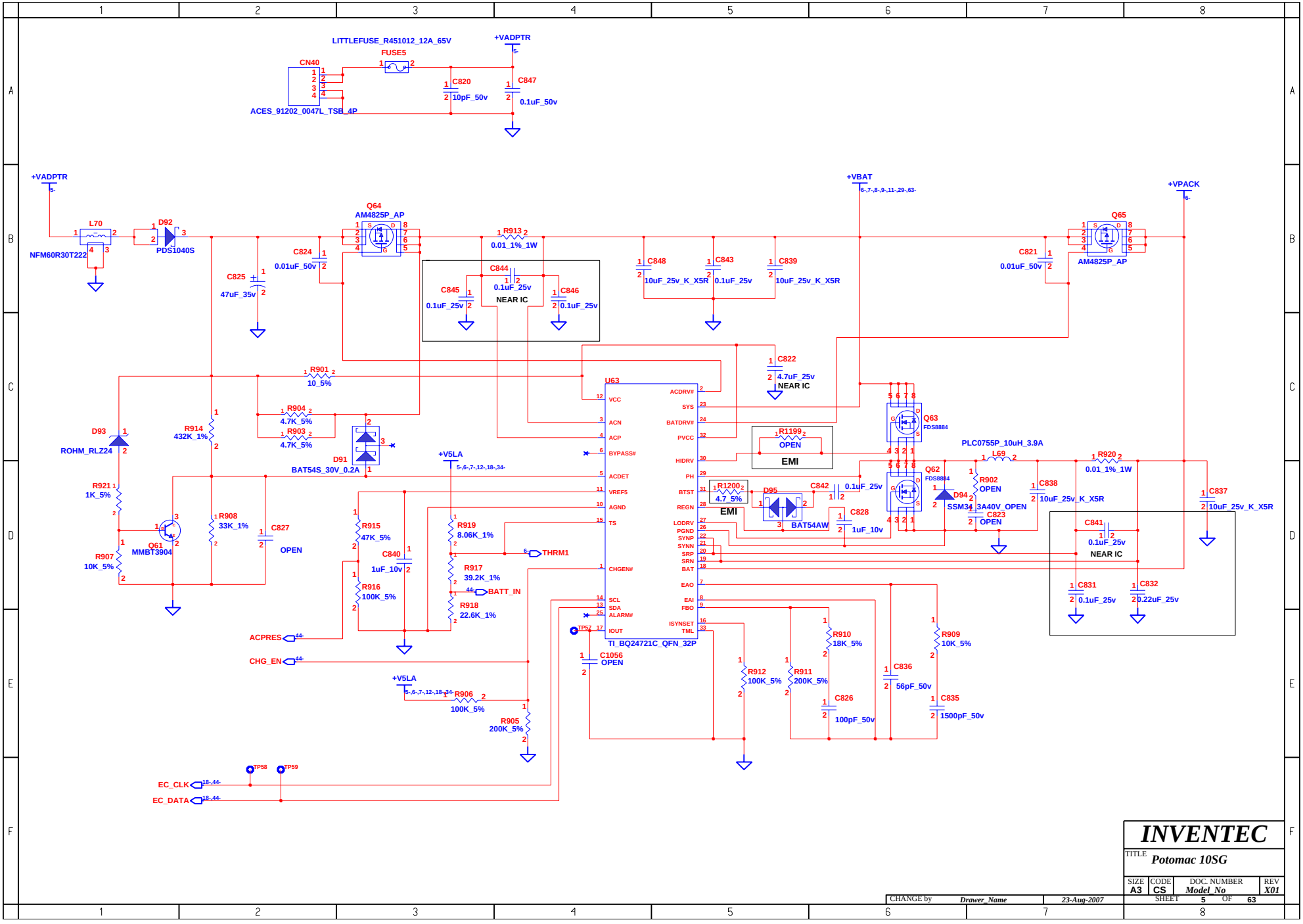
LITTLEFUSE_R451012_12A_65V
FUSE5
CN40
ACES_91202_0047L_TSB_4P
+VADPTR
C820
10pF_50v
C847
0.1uF_50v
+VADPTR
L70
NFM60R30T222
D92
PDS1040S
C825
47uF_35v
C824
0.01uF_50v
Q64
AM4825P_AP
R913
0.01_1%_1W
C844
0.1uF_25v
NEAR IC
C845
0.1uF_25v
C846
0.1uF_25v
C848
10uF_25v_K_X5R
C843
0.1uF_25v
C839
10uF_25v_K_X5R
+VBAT
C821
0.01uF_50v
Q65
AM4825P_AP
+VPACK
C822
4.7uF_25v
NEAR IC
R901
10_5%
R904
4.7K_5%
R903
4.7K_5%
D91
BAT54S_30V_0.2A
D93
ROHM_RLZ24
R914
432K_1%
R921
1K_5%
Q61
MMBT3904
R907
10K_5%
R908
33K_1%
C827
OPEN
+V5LA
U63
VCC
ACN
ACP
BYPASS#
ACDET
VREF5
AGND
TS
CHGEN#
SCL
SDA
ALARM#
IOUT
ACDRV#
SYS
BATDRV#
PVCC
HIDRV
PH
BTST
REGN
LODRV
PGND
SYNP
SYNN
SRP
SRN
BAT
EAO
EAI
FBO
ISYNSET
TML
TI_BQ24721C_QFN_32P
R1199
OPEN
EMI
R1200
4.7 5%
EMI
D95
BAT54AW
C842
0.1uF_25v
C828
1uF_10v
Q63
FDS8884
Q62
FDS8884
PLC0755P_10uH_3.9A
L69
R902
OPEN
D94
SSM34 3A40V_OPEN
C823
OPEN
C838
10uF_25v_K_X5R
R920
0.01_1%_1W
C837
10uF_25v_K_X5R
C841
0.1uF_25v
NEAR IC
C831
0.1uF_25v
C832
0.22uF_25v
R915
47K_5%
C840
1uF_10v
R916
100K_5%
R919
8.06K_1%
R917
39.2K_1%
R918
22.6K_1%
THRM1
BATT_IN
ACPRES
CHG_EN
C1056
OPEN
R912
100K_5%
R910
18K_5%
R911
200K_5%
C826
100pF_50v
C836
56pF_50v
R909
10K_5%
C835
1500pF_50v
+V5LA
R906
100K_5%
R905
200K_5%
TP58
TP59
EC_CLK
EC_DATA
INVENTEC
TITLE
Potomac 10SG
SIZE A3
CODE CS
DOC. NUMBER Model_No
REV X01
SHEET 5 OF 63
CHANGE by Drawer_Name
23-Aug-2007

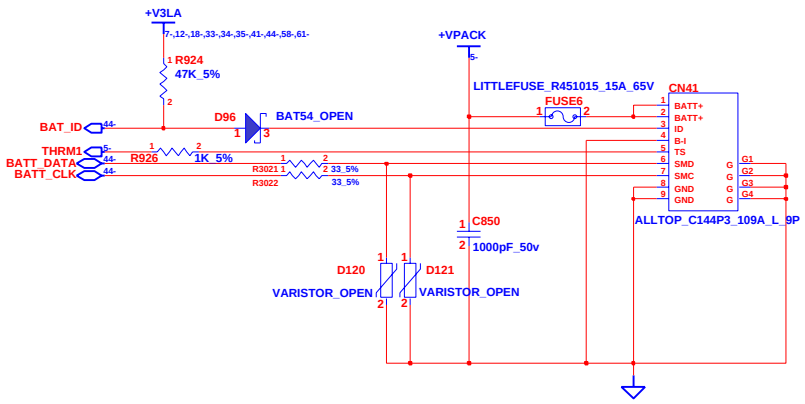

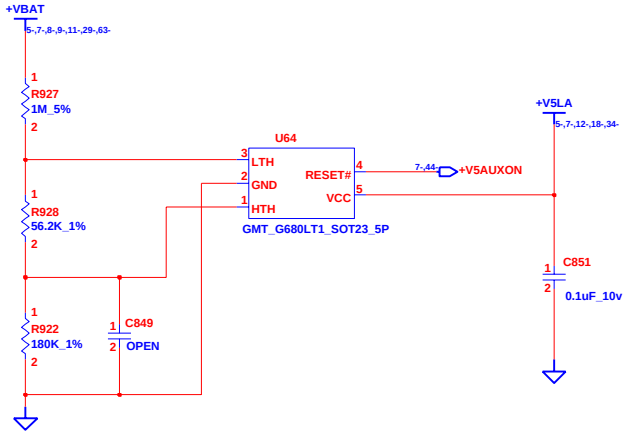

CHANGE by	Drawer_Name	23-Aug-2007	

INVENTEC

TITLE *Potomac 10SG*

SIZE	CODE	DOC. NUMBER	REV
A3	CS	Model_No	X01

SHEET 6 OF 63

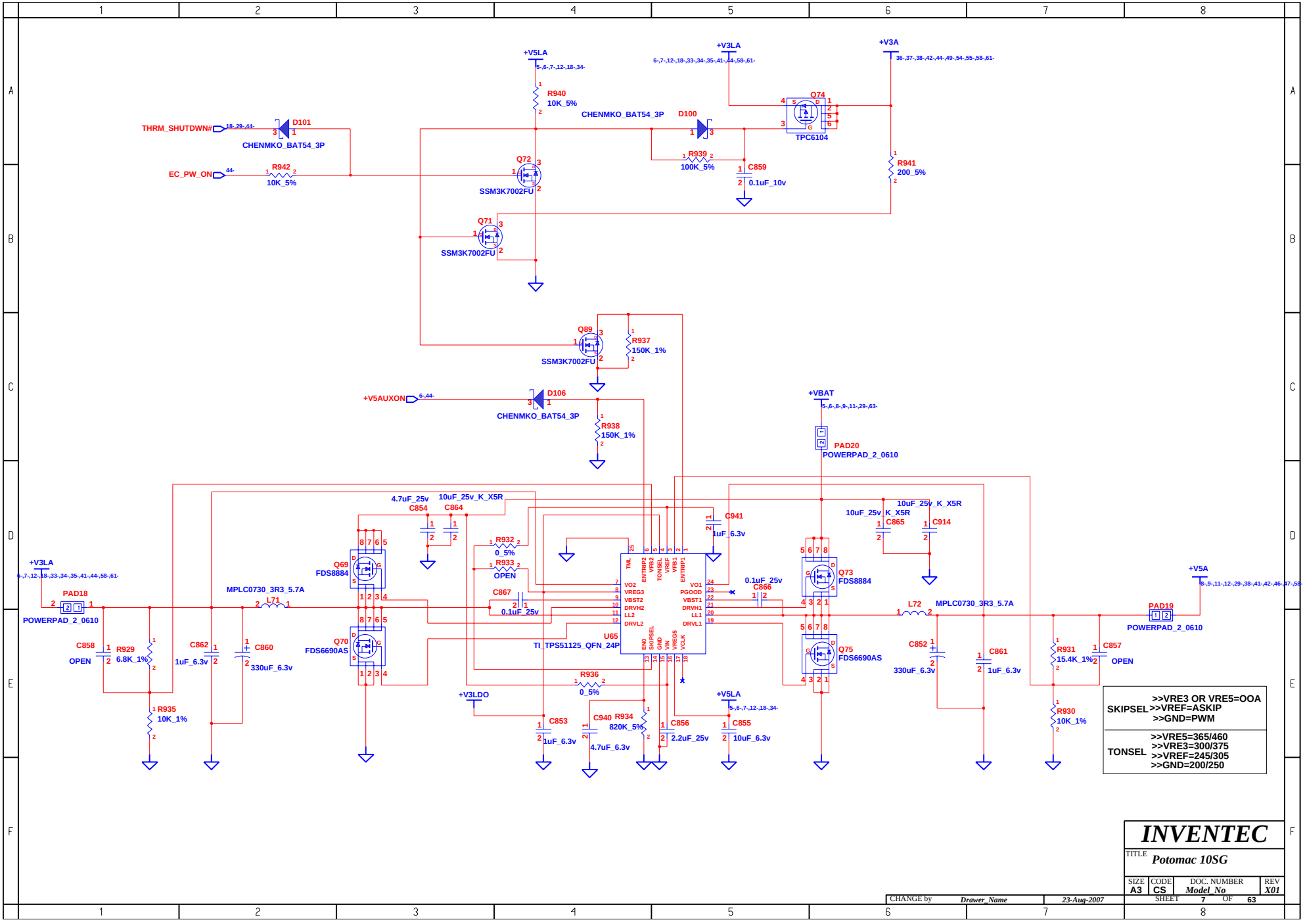

INVENTEC

TITLE Potomac 10SG

SIZE	CODE	DOC. NUMBER	REV
A3	CS	Model_No	X01

CHANGE by Drawer_Name 23-Aug-2007

SHEET 7 OF 63

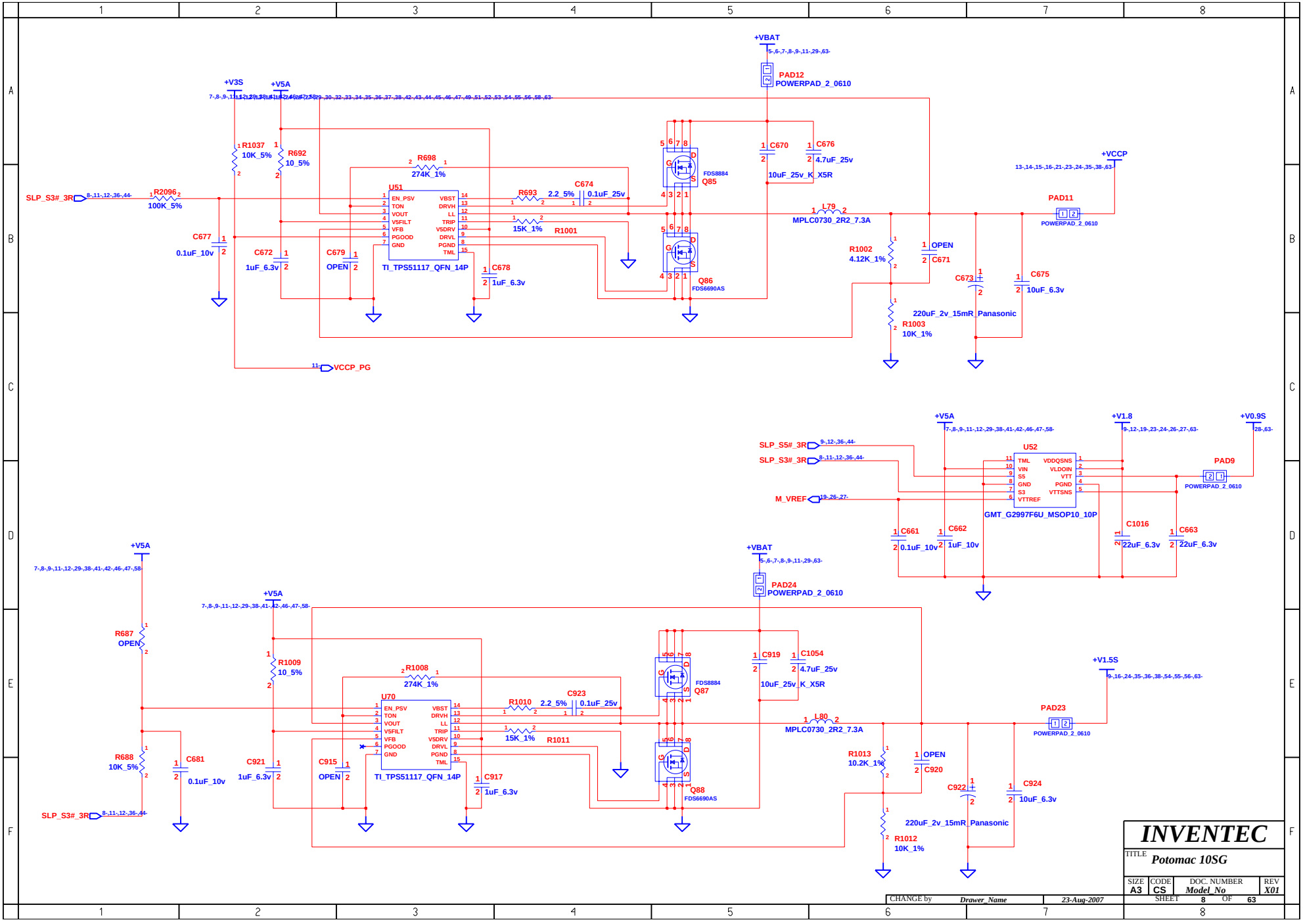
+VBAT
PAD12
POWERPAD_2_0610
+V3S
+V5A
R1037
10K_5%
R692
10_5%
R698
274K_1%
U51
EN_PSV
TON
VOUT
VSFILT
VFB
PGOOD
GND
VBST
DRVH
LL
TRIP
VSDRV
DRVL
PGND
TML
TI_TPS51117_QFN_14P
SLP_S3#_3R
R2096
100K_5%
C677
0.1uF_10v
C672
1uF_6.3v
C679
OPEN
C678
1uF_6.3v
R693
2.2_5%
C674
0.1uF_25v
15K_1%
R1001
Q85
FDS8884
Q86
FDS6690AS
C670
10uF_25v_K_X5R
C676
4.7uF_25v
L79
MPLC0730_2R2_7.3A
+VCCP
PAD11
POWERPAD_2_0610
R1002
4.12K_1%
C671
OPEN
C673
220uF_2v_15mR_Panasonic
C675
10uF_6.3v
R1003
10K_1%
VCCP_PG
+V5A
+V1.8
+V0.9S
SLP_S5#_3R
SLP_S3#_3R
M_VREF
U52
TML
VIN
S5
GND
S3
VTTREF
VDDQSNS
VLDOIN
VTT
PGND
VTTSNS
GMT_G2997F6U_MSOP10_10P
PAD9
POWERPAD_2_0610
C661
0.1uF_10v
C662
1uF_10v
C1016
22uF_6.3v
C663
22uF_6.3v
+V5A
R687
OPEN
R1009
10_5%
R1008
274K_1%
U70
EN_PSV
TON
VOUT
VSFILT
VFB
PGOOD
GND
VBST
DRVH
LL
TRIP
VSDRV
DRVL
PGND
TML
TI_TPS51117_QFN_14P
R688
10K_5%
C681
0.1uF_10v
C921
1uF_6.3v
C915
OPEN
C917
1uF_6.3v
SLP_S3#_3R
R1010
2.2_5%
C923
0.1uF_25v
15K_1%
R1011
Q87
FDS8884
Q88
FDS6690AS
+VBAT
PAD24
POWERPAD_2_0610
C919
10uF_25v_K_X5R
C1054
4.7uF_25v
L80
MPLC0730_2R2_7.3A
+V1.5S
PAD23
POWERPAD_2_0610
R1013
10.2K_1%
C920
OPEN
C922
220uF_2v_15mR_Panasonic
C924
10uF_6.3v
R1012
10K_1%
INVENTEC
TITLE
Potomac 10SG
SIZE
A3
CODE
CS
DOC. NUMBER
Model_No
REV
X01
SHEET
8
OF
63
CHANGE by
Drawer_Name
23-Aug-2007

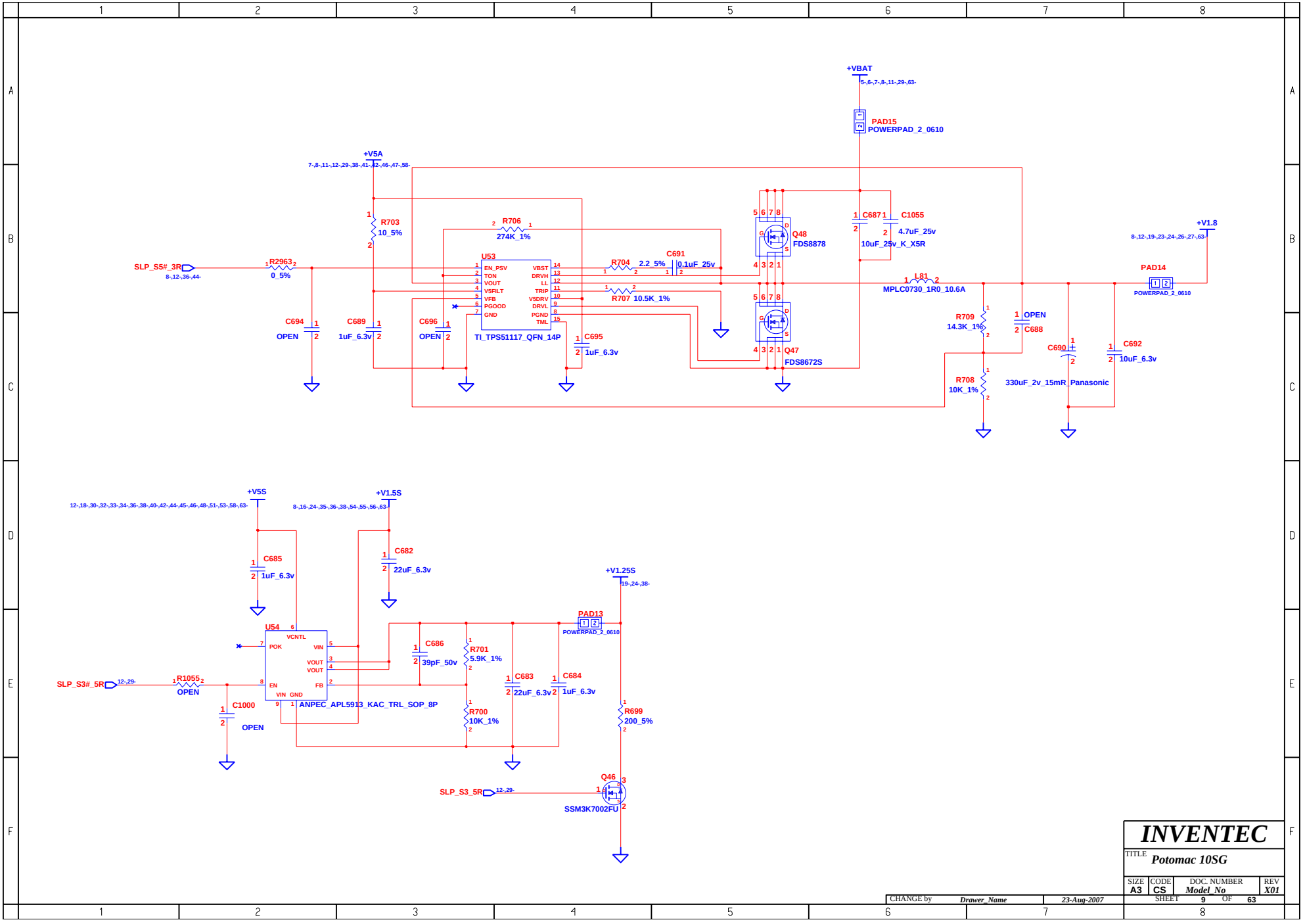

INVENTEC			
TITLE Potomac 10SG			
SIZE A3	CODE CS	DOC. NUMBER Model_No	REV X01
CHANGE by Drawer_Name	23-Aug-2007	SHEET 9 OF 63	

BLANK

INVENTEC				
TITLE Potomac 10SG				
SIZE A3	CODE CS	DOC. NUMBER Model_No		REV X01
CHANGE by Drawer_Name	23-Aug-2007	SHEET 10 OF 63		

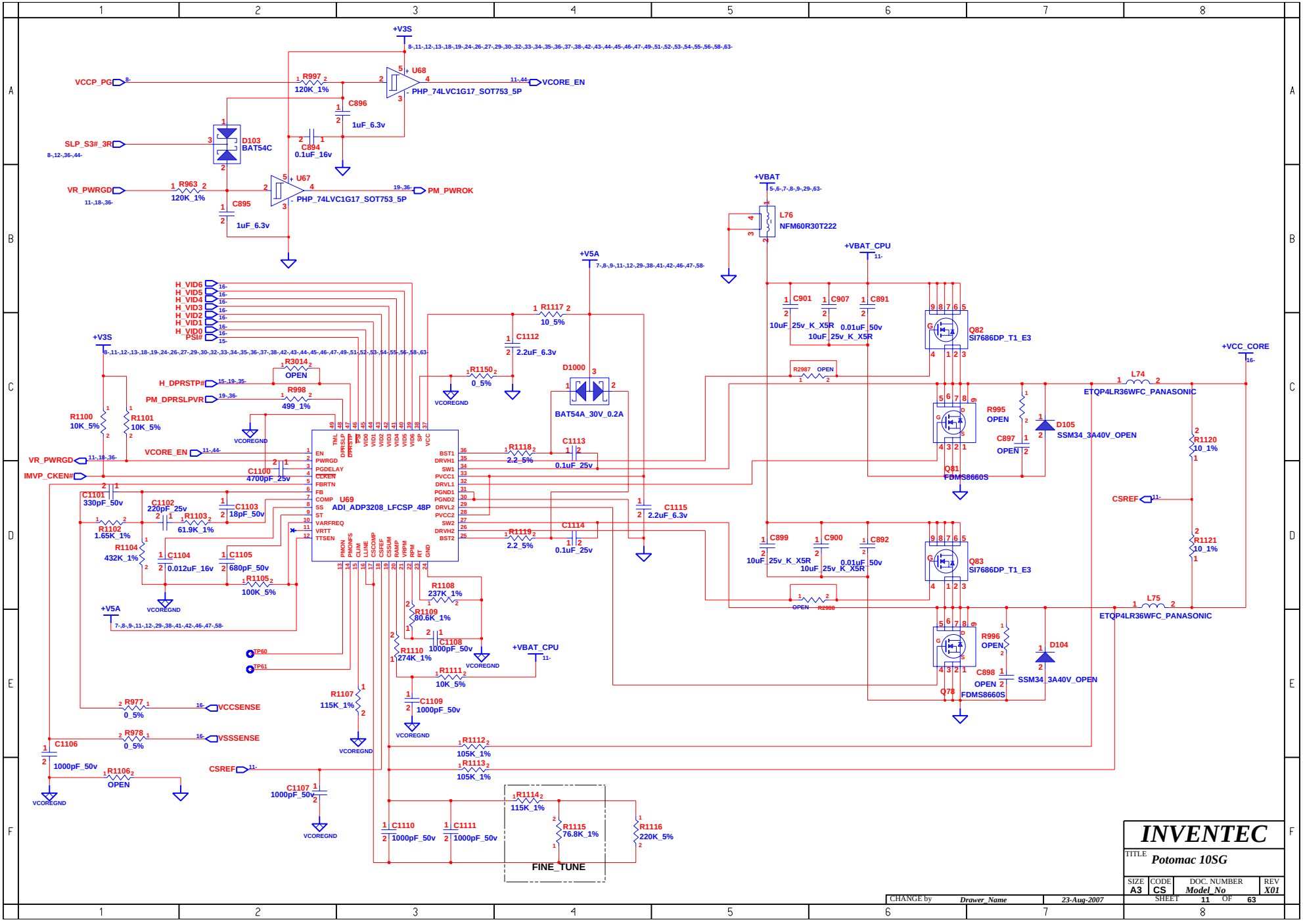

CHANGE by	Drawer_Name	23-Aug-2007	

INVENTEC

TITLE *Potomac 10SG*

SIZE	CODE	DOC. NUMBER	REV
A3	CS	Model_No	X01

SHEET 11 OF 63

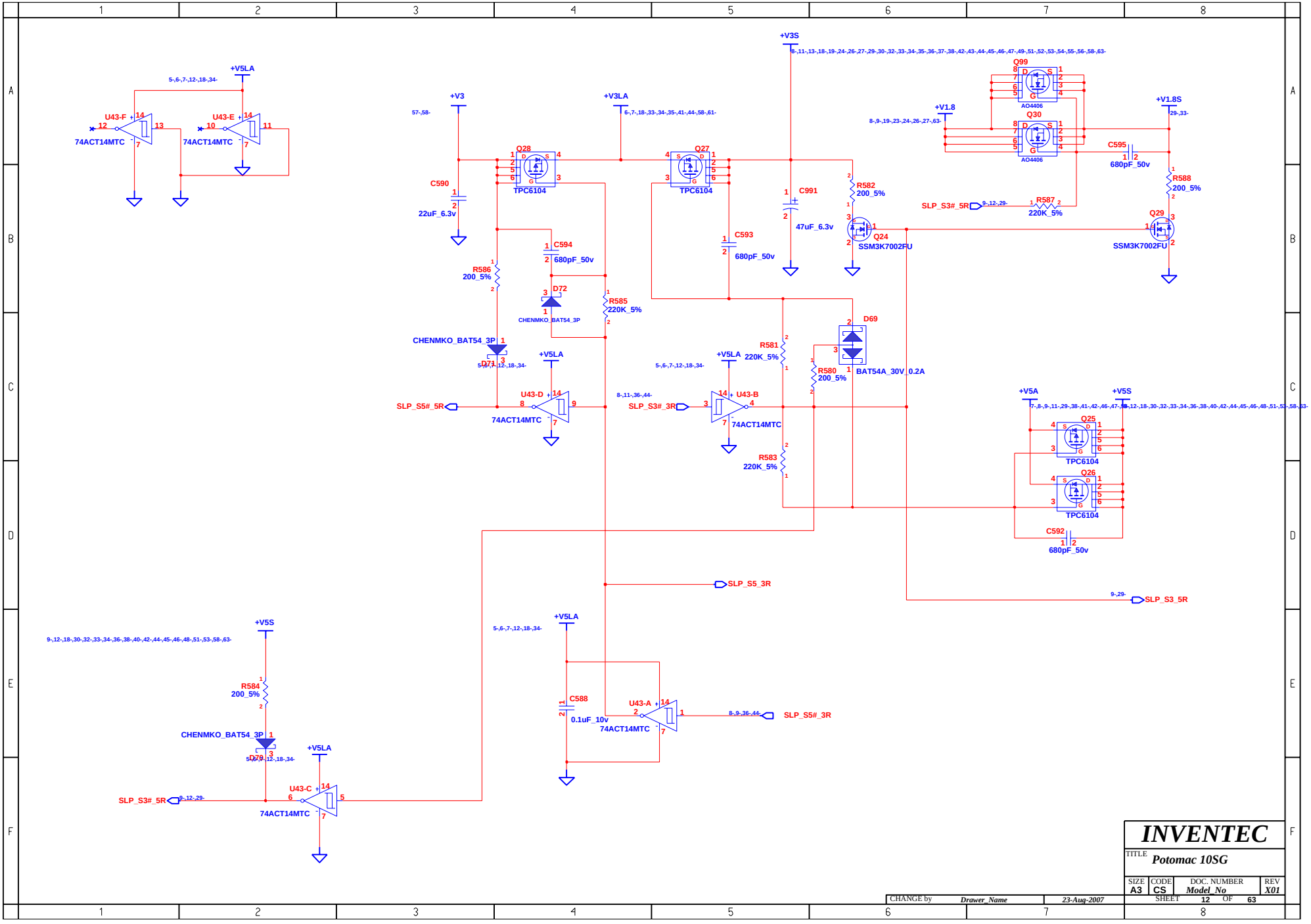
+V5LA
5-,6-,7-,12-,18-,34-
U43-F
U43-E
74ACT14MTC
+V3
57-,58-
+V3LA
6-,7-,18-,33-,34-,35-,41-,44-,58-,61-
+V3S
8-,11-,13-,18-,19-,24-,26-,27-,29-,30-,32-,33-,34-,35-,36-,37-,38-,42-,43-,44-,45-,46-,47-,49-,51-,52-,53-,54-,55-,56-,58-,63-
Q99
AO4406
Q30
+V1.8
8-,9-,19-,23-,24-,26-,27-,63-
+V1.8S
29-,33-
C595
680pF_50v
R588
200_5%
Q28
TPC6104
Q27
C590
22uF_6.3v
C991
47uF_6.3v
R582
200_5%
SLP_S3#_5R
9-,12-,29-
R587
220K_5%
Q24
SSM3K7002FU
Q29
C594
680pF_50v
C593
R586
200_5%
D72
CHENMKO_BAT54_3P
R585
220K_5%
D69
BAT54A_30V 0.2A
R581
220K_5%
R580
200_5%
U43-D
SLP_S5#_5R
8-,11-,36-,44-
SLP_S3#_3R
U43-B
R583
220K_5%
+V5A
+V5S
7-,8-,9-,11-,29-,38-,41-,42-,46-,47-,48-,12-,18-,30-,32-,33-,34-,36-,38-,40-,42-,44-,45-,46-,48-,51-,53-,58-,63-
Q25
Q26
C592
680pF_50v
SLP_S5_3R
9-,29-
SLP_S3_5R
9-,12-,18-,30-,32-,33-,34-,36-,38-,40-,42-,44-,45-,46-,48-,51-,53-,58-,63-
R584
200_5%
C588
0.1uF_10v
U43-A
8-,9-,36-,44-
SLP_S5#_3R
U43-C
SLP_S3#_5R
9-,12-,29-
INVENTEC
TITLE
Potomac 10SG
SIZE A3
CODE CS
DOC. NUMBER Model_No
REV X01
CHANGE by Drawer_Name
23-Aug-2007
SHEET 12 OF 63

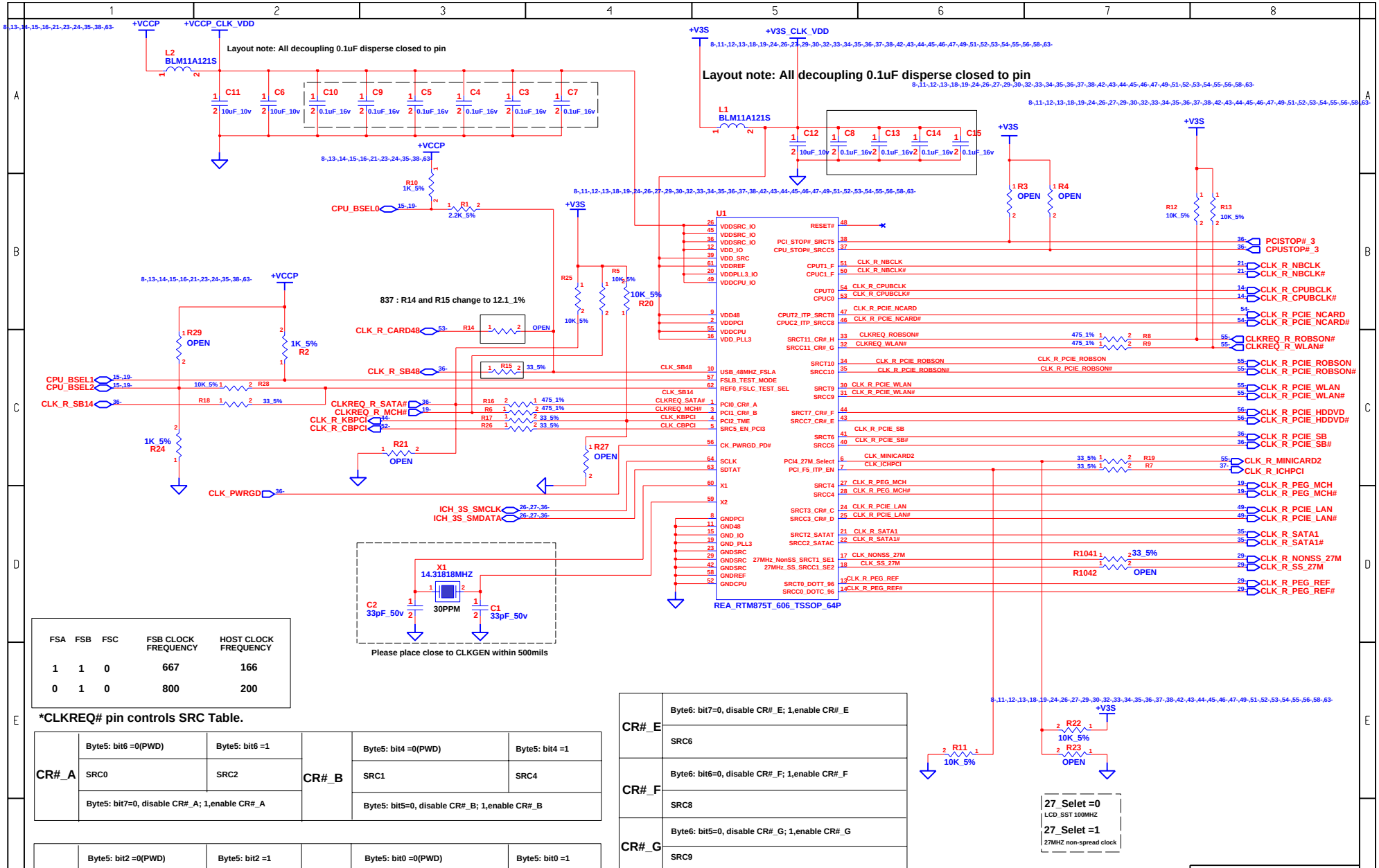

FSA	FSB	FSC	FSB CLOCK FREQUENCY	HOST CLOCK FREQUENCY
1	1	0	667	166
0	1	0	800	200

*CLKREQ# pin controls SRC Table.

CR#_A	Byte5: bit6 =0(PWD)	Byte5: bit6 =1	CR#_B	Byte5: bit4 =0(PWD)	Byte5: bit4 =1
	SRC0	SRC2		SRC1	SRC4
	Byte5: bit7=0, disable CR#_A; 1,enable CR#_A			Byte5: bit5=0, disable CR#_B; 1,enable CR#_B	

CR#_C	Byte5: bit2 =0(PWD)	Byte5: bit2 =1	CR#_D	Byte5: bit0 =0(PWD)	Byte5: bit0 =1
	SRC0	SRC2		SRC1	SRC4
	Byte5: bit3=0, disable CR#_C; 1,enable CR#_C			Byte5: bit1=0, disable CR#_D; 1,enable CR#_D	

CR#_E	Byte6: bit7=0, disable CR#_E; 1,enable CR#_E
	SRC6
CR#_F	Byte6: bit6=0, disable CR#_F; 1,enable CR#_F
	SRC8
CR#_G	Byte6: bit5=0, disable CR#_G; 1,enable CR#_G
	SRC9
CR#_H	Byte6: bit4=0, disable CR#_H; 1,enable CR#_H
	SRC10

INVENTEC

TITLE Potomac 10SG

SIZE	CODE	DOC. NUMBER	REV
A3	CS	Model_No	X01

CHANGE by Drawer_Name 23-Aug-2007 SHEET 13 OF 63

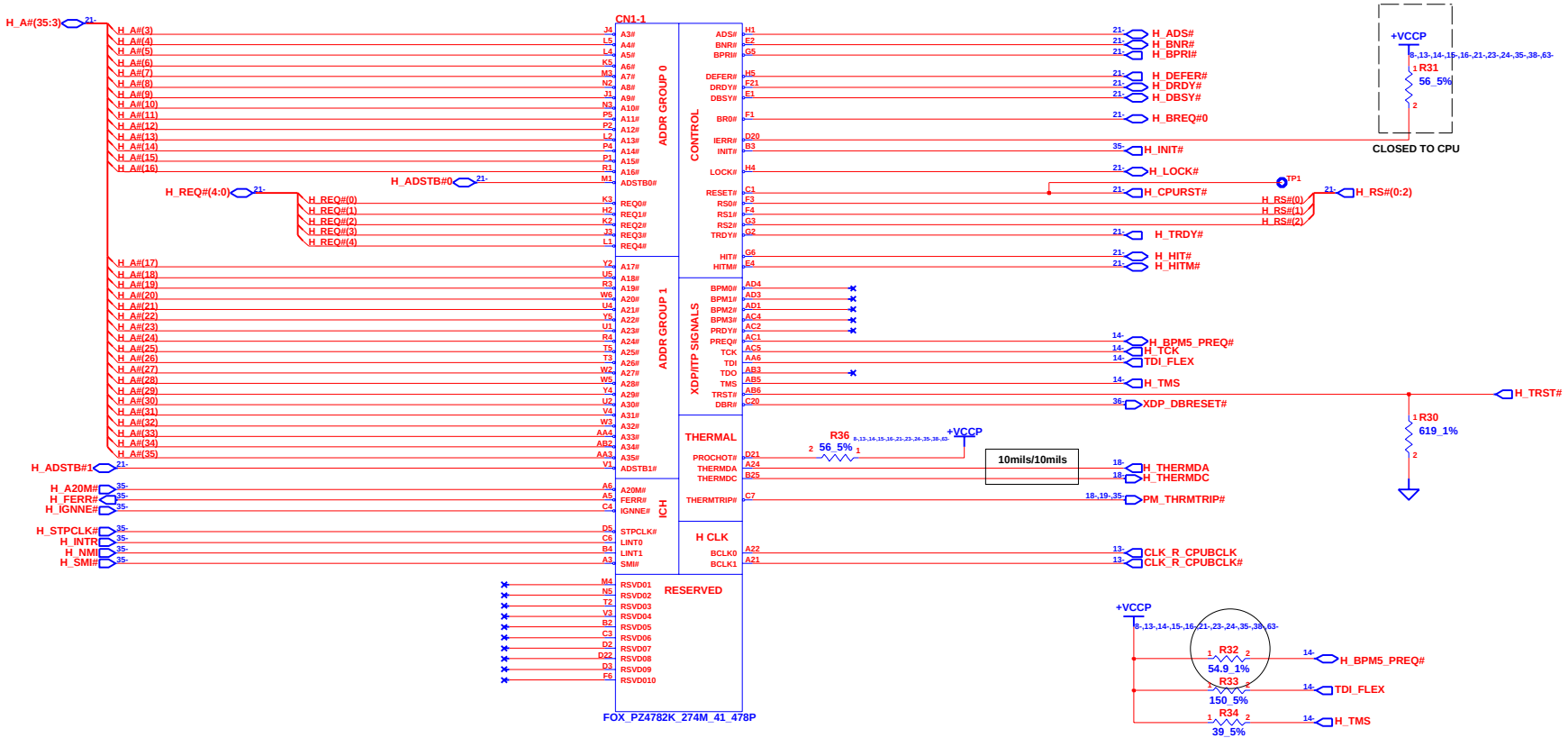

PM_THRMTRIP# should be T at CPU

INVENTEC			
TITLE Potomac 10SG			
SIZE A3	CODE CS	DOC. NUMBER Model_No	REV X01
CHANGE by Drawer_Name	27-Aug-2007	SHEET 14 OF 63	

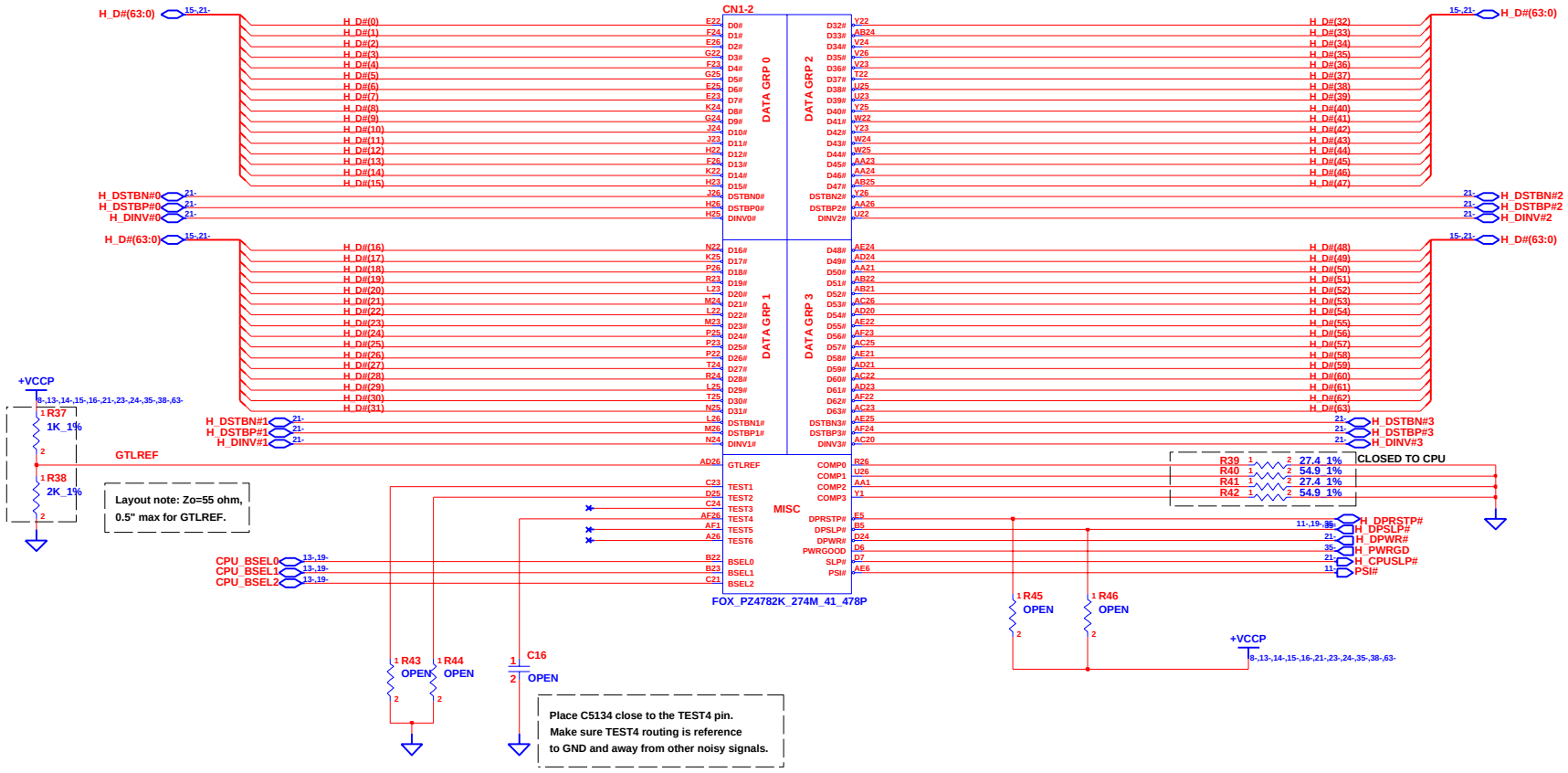

INVENTEC

TITLE Potomac 10SG

SIZE	CODE	DOC. NUMBER	REV
A3	CS	Model_No	X01

CHANGE by Drawer_Name 23-Aug-2007

SHEET 15 OF 63

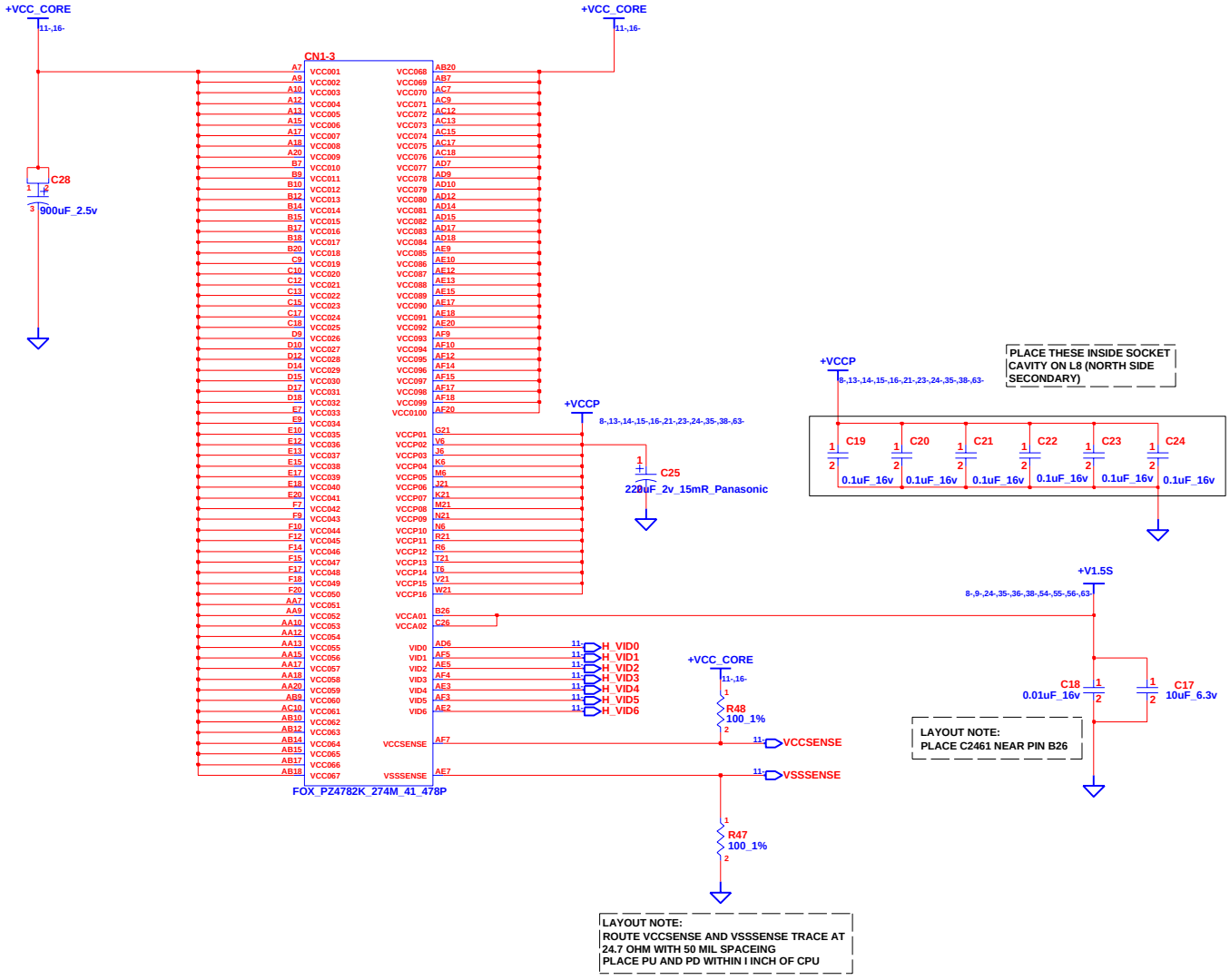

INVENTEC			
TITLE Potomac 10SG			
SIZE A3	CODE CS	DOC. NUMBER Model_No	REV X01
CHANGE by Drawer_Name	16-Oct-2007	SHEET 16 OF 63	

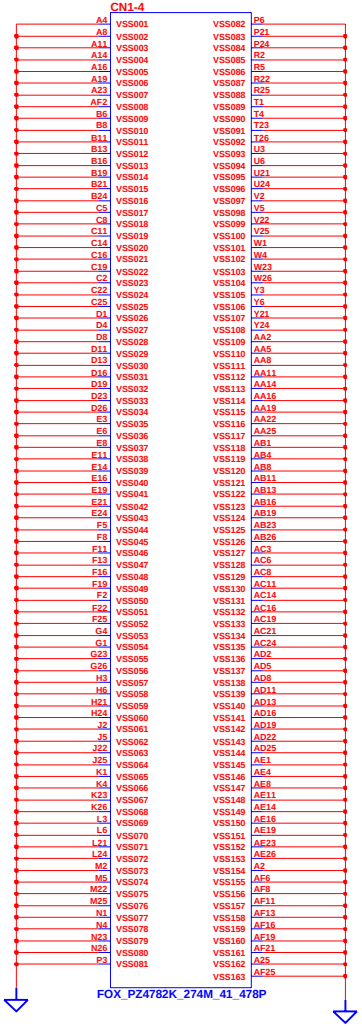

CHANGE by	Drawer_Name	23-Aug-2007	

INVENTEC

TITLE *Potomac 10SG*

SIZE	CODE	DOC. NUMBER	REV
A3	CS	*Model_No*	*X01*

SHEET 17 OF 63

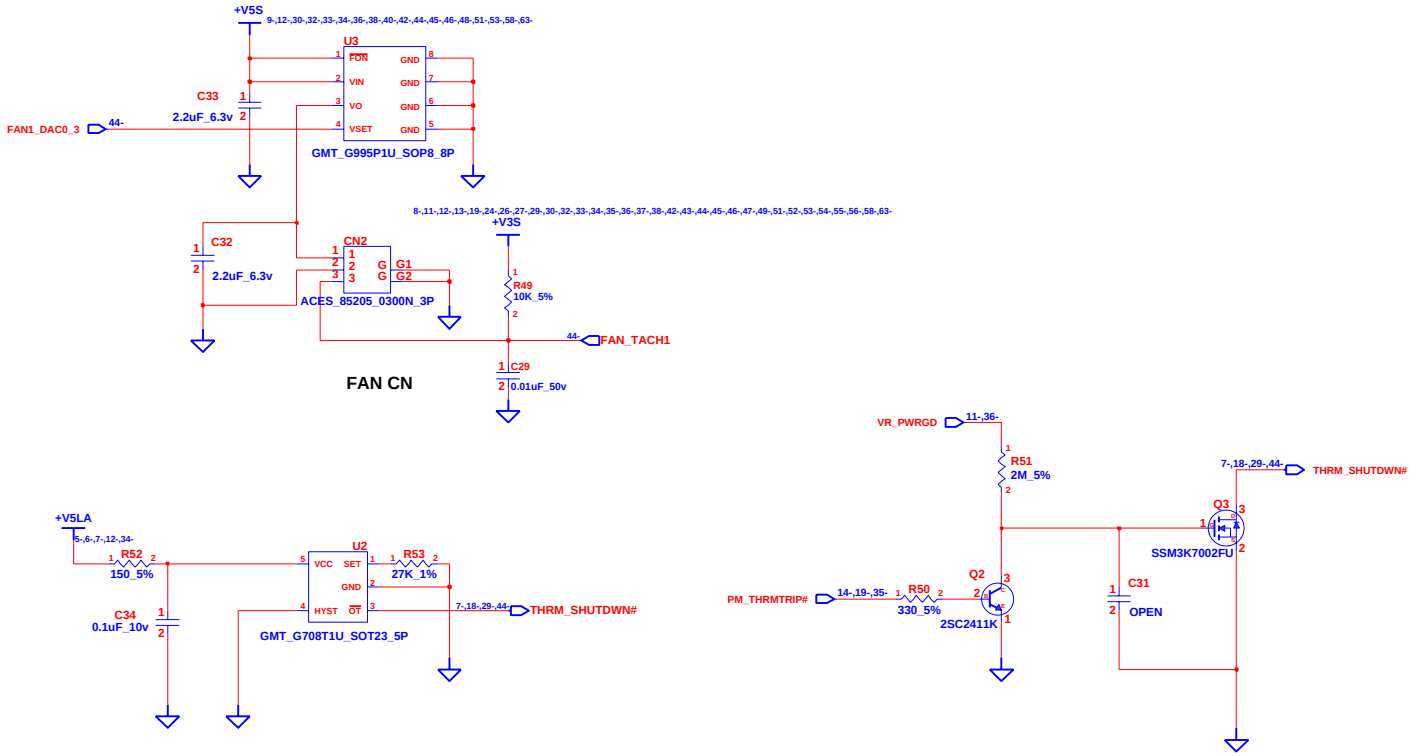

Thermal shoutdown at 83C +/-3C from 60C to 100C

RSET=0.0012*T^2- 0.9308*T+96.147

Hysteresis is 30C

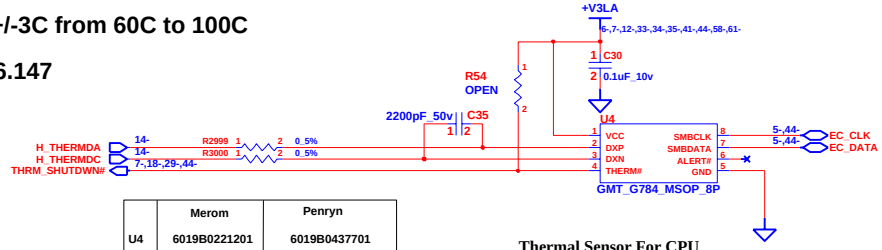

	Merom	Penryn
U4	6019B0221201	6019B0437701
C35	6010A0010701 2200pF_50v	6010071012AT 100pF_50v

Thermal Sensor For CPU

INVENTEC	
TITLE	Potomac 10SG
SIZE A3	CODE CS
DOC. NUMBER	Model_No
REV	X01
SHEET	18 OF 63
CHANGE by	Drawer_Name
	23-Aug-2007

MCH_CFG(5)	LOW=DMIx2 HIGH=DMIx4

MCH_CFG(7) (CPU Strap)	LOW=RSVD HIGH=Mobile CPU

MCH_CFG(9) PCIE Graphics Lane	LOW=Reverse Lane HIGH=Normal operation

MCH_CFG(13:12) XOR/ALLZ	00=PARTIAL CLOCK GATING DISABLE 01=XOR MODE ENABLE 10=ALL-Z MODE ENABLE 11=NORMAL OPERATION

MCH_CFG(16) (FSB Dynamic ODT)	LOW=Dynamic ODT Disable HIGH=Dynamic ODT Enable

MCH_CFG(11) PSB 4X CLK ENABLE	LOW=CALISTOGA HIGH=RESERVED

NOTE: CFG[2:0] STRP : 001b : 533 MT/S
011b : 667 MT/S

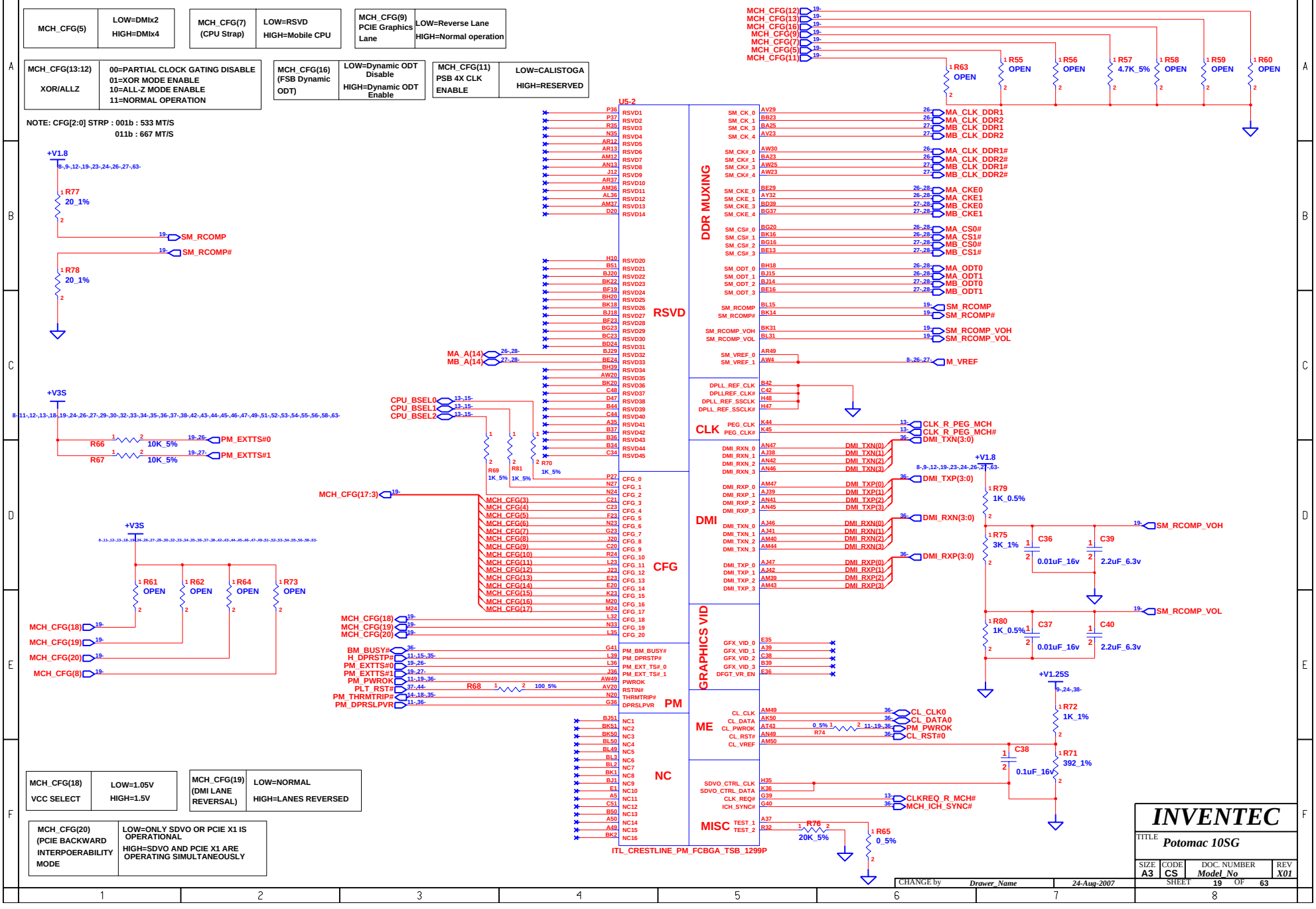

MCH_CFG(18) VCC SELECT	LOW=1.05V HIGH=1.5V

MCH_CFG(19) (DMI LANE REVERSAL)	LOW=NORMAL HIGH=LANES REVERSED

MCH_CFG(20) (PCIE BACKWARD INTERPOERABILITY MODE	LOW=ONLY SDVO OR PCIE X1 IS OPERATIONAL HIGH=SDVO AND PCIE X1 ARE OPERATING SIMULTANEOUSLY

INVENTEC

TITLE *Potomac 10SG*

SIZE	CODE	DOC. NUMBER	REV
A3	CS	*Model_No*	*X01*

SHEET 19 OF 63

CHANGE by *Drawer_Name* *24-Aug-2007*

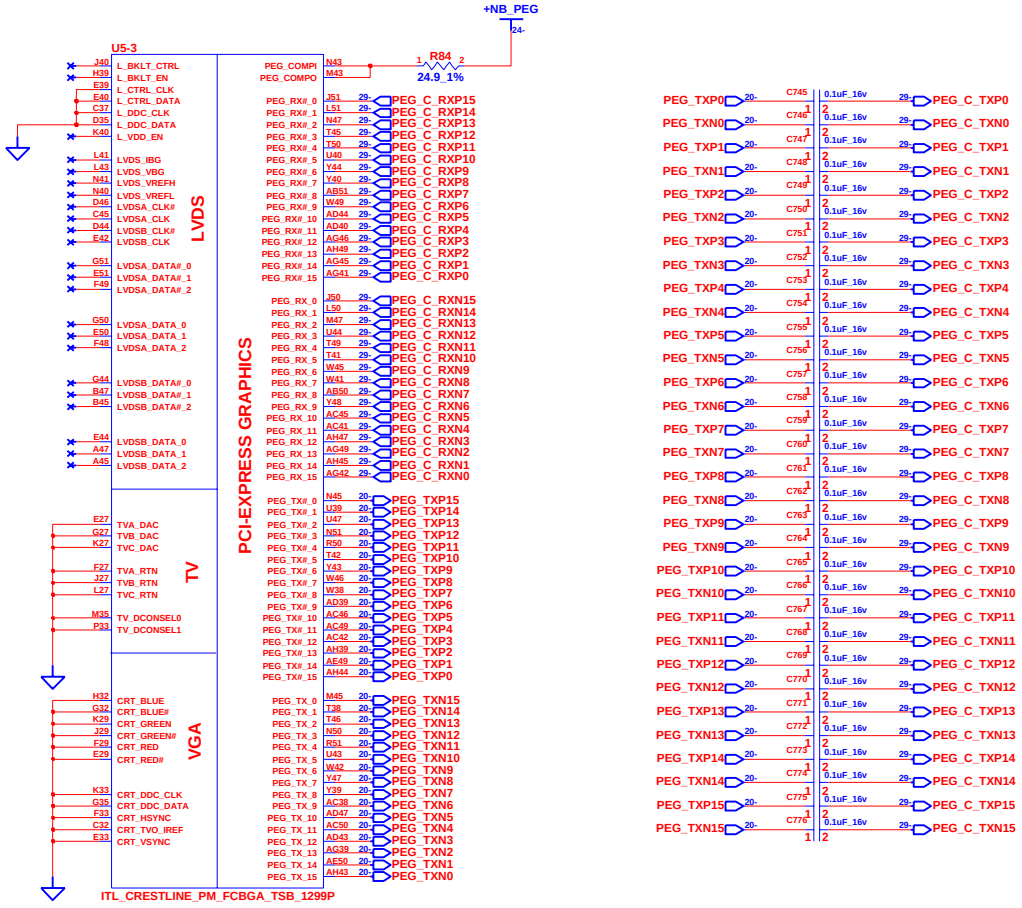

INVENTEC	
TITLE	Potomac 10SG
SIZE A3	CODE CS
DOC. NUMBER	Model_No
REV	X01
SHEET	20 OF 63
CHANGE by	Drawer_Name
	24-Aug-2007

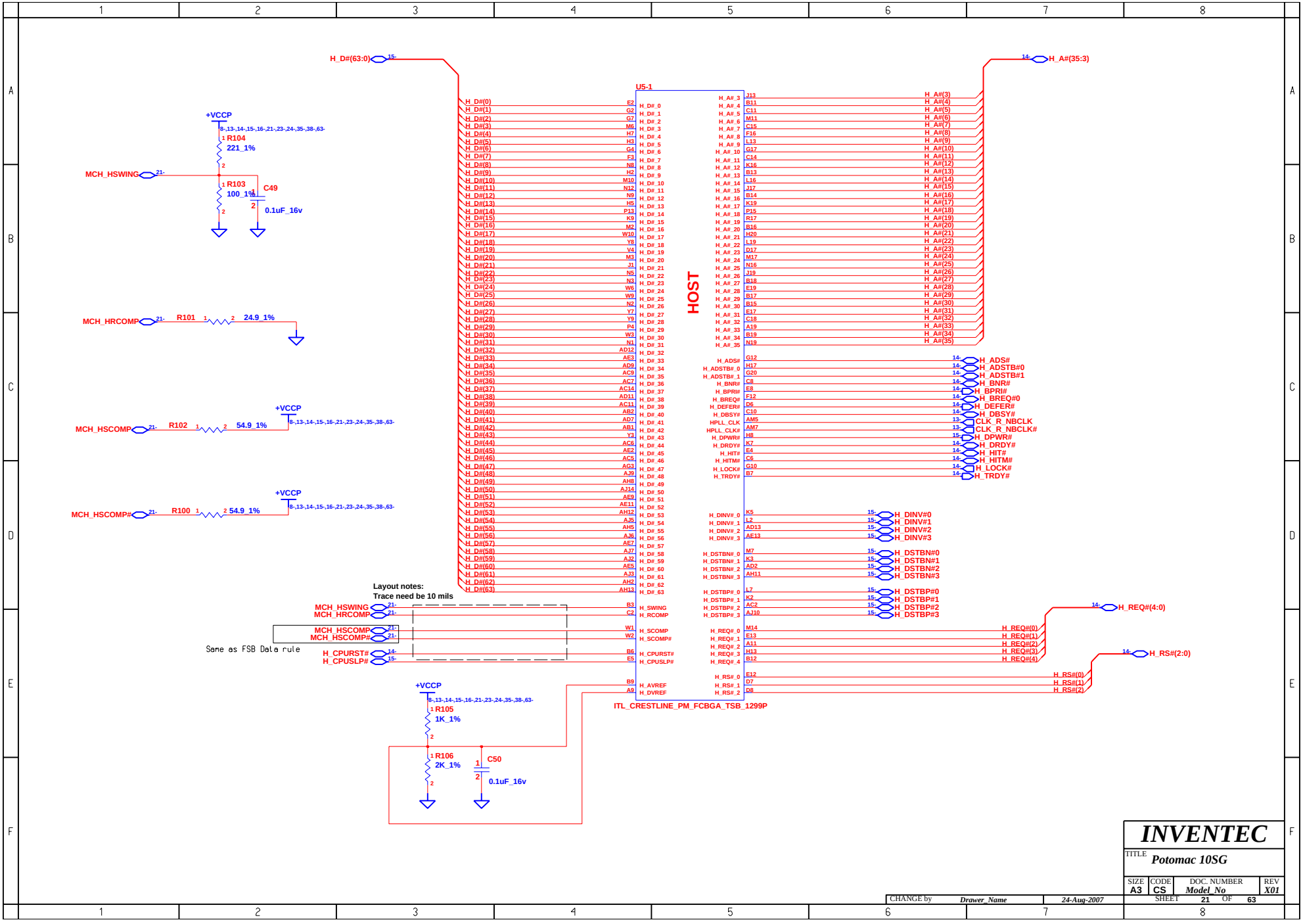
U5-1
HOST
ITL_CRESTLINE_PM_FCBGA_TSB_1299P
H_D#(63:0)
H_A#(35:3)
H_ADS#
H_ADSTB#0
H_ADSTB#1
H_BNR#
H_BPRI#
H_BREQ#0
H_DEFER#
H_DBSY#
CLK_R_NBCLK
CLK_R_NBCLK#
H_DPWR#
H_DRDY#
H_HIT#
H_HITM#
H_LOCK#
H_TRDY#
H_DINV#0
H_DINV#1
H_DINV#2
H_DINV#3
H_DSTBN#0
H_DSTBN#1
H_DSTBN#2
H_DSTBN#3
H_DSTBP#0
H_DSTBP#1
H_DSTBP#2
H_DSTBP#3
H_REQ#(4:0)
H_RS#(2:0)
MCH_HSWING
MCH_HRCOMP
MCH_HSCOMP
MCH_HSCOMP#
H_CPURST#
H_CPUSLP#
+VCCP
R104 221_1%
R103 100_1%
C49 0.1uF_16v
R101 24.9_1%
R102 54.9_1%
R100 54.9_1%
R105 1K_1%
R106 2K_1%
C50 0.1uF_16v
Layout notes:
Trace need be 10 mils
Same as FSB Data rule
INVENTEC
TITLE Potomac 10SG
SIZE A3
CODE CS
DOC. NUMBER Model_No
REV X01
SHEET 21 OF 63
CHANGE by Drawer_Name
24-Aug-2007

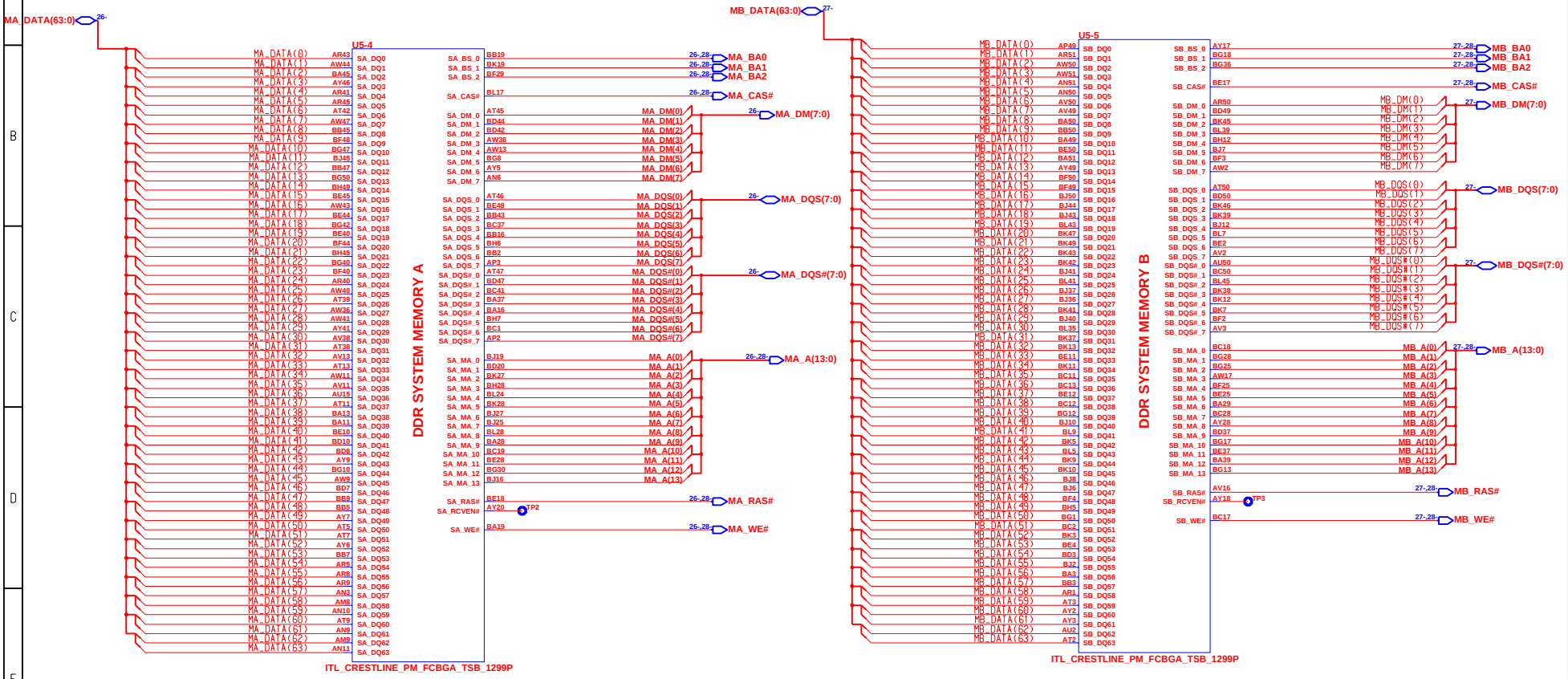

CHANGE by	Drawer_Name	24-Aug-2007	

INVENTEC

TITLE *Potomac 10SG*

SIZE	CODE	DOC. NUMBER	REV
A3	CS	Model_No	X01

SHEET 22 OF 63

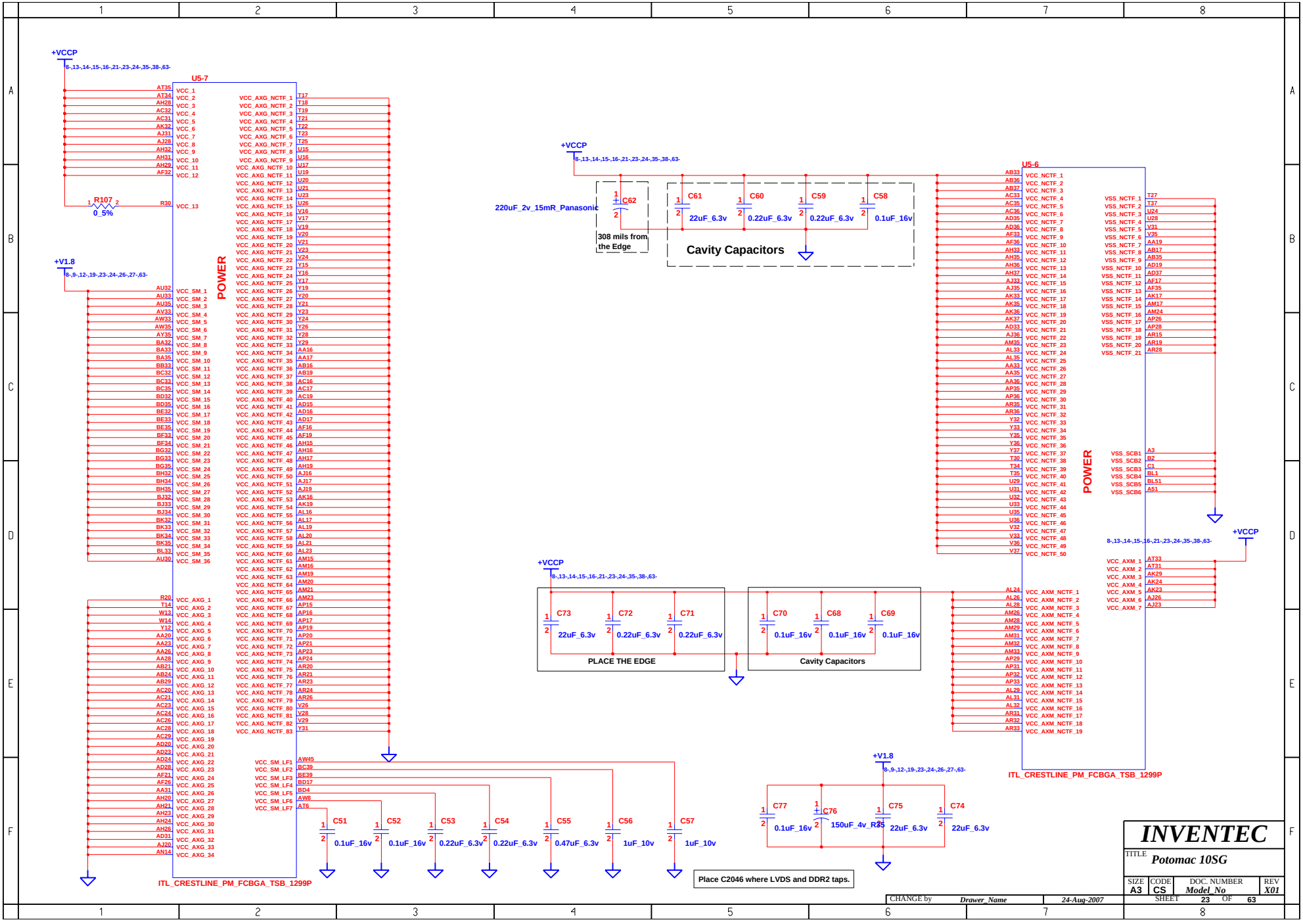
+VCCP
8-,13-,14-,15-,16-,21-,23-,24-,35-,38-,63-
U5-7
R107
0_5%
+V1.8
8-,9-,12-,19-,23-,24-,26-,27-,63-
POWER
ITL_CRESTLINE_PM_FCBGA_TSB_1299P
220uF_2v_15mR_Panasonic
C62
308 mils from the Edge
C61
22uF_6.3v
C60
0.22uF_6.3v
C59
0.22uF_6.3v
C58
0.1uF_16v
Cavity Capacitors
U5-6
POWER
ITL_CRESTLINE_PM_FCBGA_TSB_1299P
C73
22uF_6.3v
C72
0.22uF_6.3v
C71
0.22uF_6.3v
PLACE THE EDGE
C70
0.1uF_16v
C68
0.1uF_16v
C69
0.1uF_16v
Cavity Capacitors
C51
0.1uF_16v
C52
0.1uF_16v
C53
0.22uF_6.3v
C54
0.22uF_6.3v
C55
0.47uF_6.3v
C56
1uF_10v
C57
1uF_10v
C77
0.1uF_16v
C76
150uF_4v_R35
C75
22uF_6.3v
C74
22uF_6.3v
Place C2046 where LVDS and DDR2 taps.
INVENTEC
TITLE
Potomac 10SG
SIZE A3
CODE CS
DOC. NUMBER Model_No
REV X01
SHEET 23 OF 63
CHANGE by Drawer_Name
24-Aug-2007

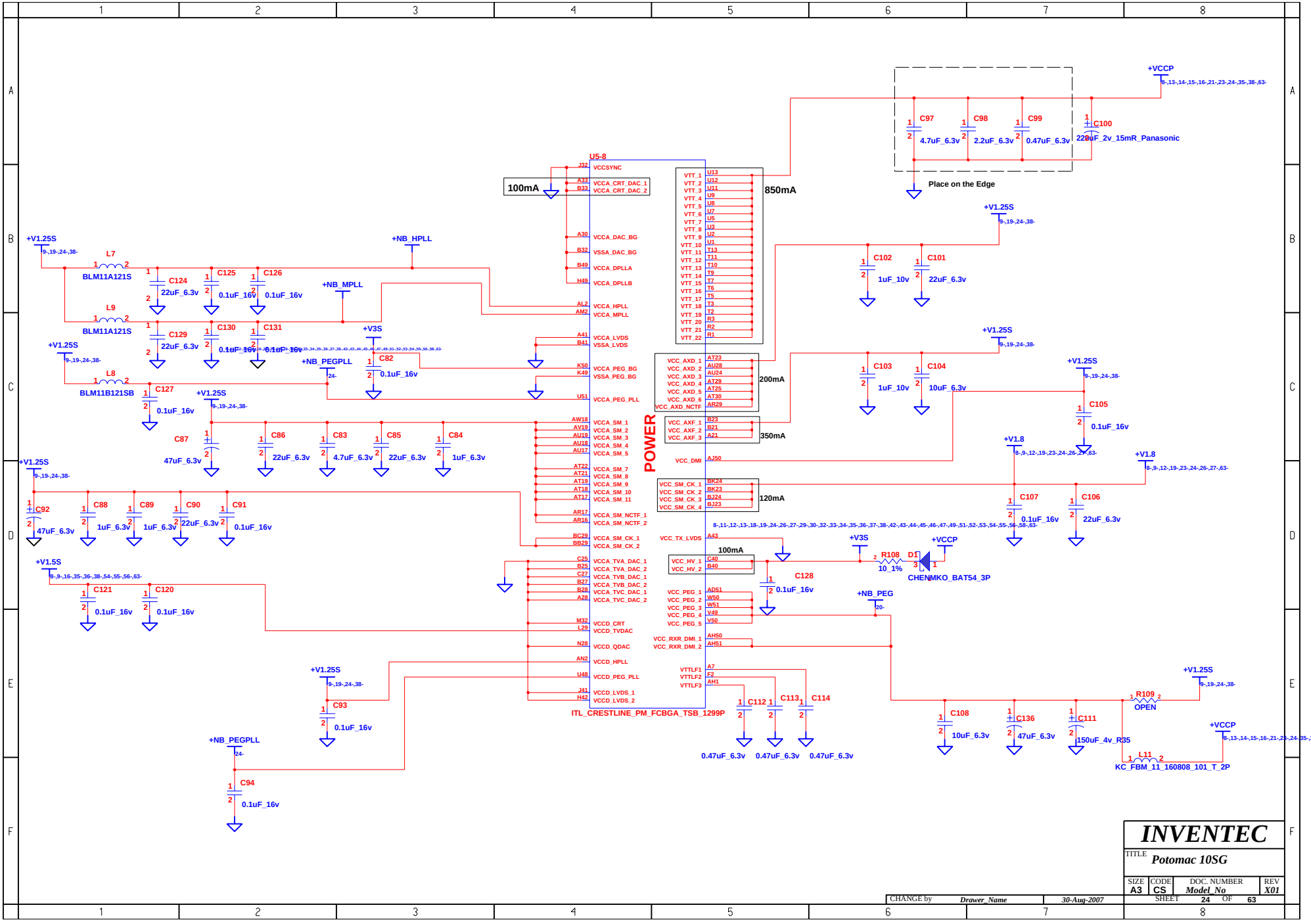
U5-8
POWER
ITL_CRESTLINE_PM_FCBGA_TSB_1299P
100mA
850mA
200mA
350mA
120mA
100mA
Place on the Edge
+VCCP
C97 4.7uF_6.3v
C98 2.2uF_6.3v
C99 0.47uF_6.3v
C100 220uF_2v_15mR_Panasonic
+V1.25S
C102 1uF_10v
C101 22uF_6.3v
C103 1uF_10v
C104 10uF_6.3v
C105 0.1uF_16v
+V1.8
C107 0.1uF_16v
C106 22uF_6.3v
+V3S
R108 10_1%
D1 CHENMKO_BAT54_3P
C128 0.1uF_16v
+NB_PEG
R109 OPEN
C108 10uF_6.3v
C136 47uF_6.3v
C111 150uF_4v_R35
L11 KC_FBM_11_160808_101_T_2P
C112 0.47uF_6.3v
C113 0.47uF_6.3v
C114 0.47uF_6.3v
+NB_HPLL
+NB_MPLL
+NB_PEGPLL
L7 BLM11A121S
L9 BLM11A121S
L8 BLM11B121SB
C124 22uF_6.3v
C125 0.1uF_16v
C126 0.1uF_16v
C129 22uF_6.3v
C130 0.1uF_16v
C131 0.1uF_16v
C82 0.1uF_16v
C127 0.1uF_16v
C87 47uF_6.3v
C86 22uF_6.3v
C83 4.7uF_6.3v
C85 22uF_6.3v
C84 1uF_6.3v
C92 47uF_6.3v
C88 1uF_6.3v
C89 1uF_6.3v
C90 22uF_6.3v
C91 0.1uF_16v
+V1.5S
C121 0.1uF_16v
C120 0.1uF_16v
C93 0.1uF_16v
C94 0.1uF_16v
VCCSYNC
VCCA_CRT_DAC_1
VCCA_CRT_DAC_2
VCCA_DAC_BG
VSSA_DAC_BG
VCCA_DPLLA
VCCA_DPLLB
VCCA_HPLL
VCCA_MPLL
VCCA_LVDS
VSSA_LVDS
VCCA_PEG_BG
VSSA_PEG_BG
VCCA_PEG_PLL
VCCA_SM_1
VCCA_SM_2
VCCA_SM_3
VCCA_SM_4
VCCA_SM_5
VCCA_SM_7
VCCA_SM_8
VCCA_SM_9
VCCA_SM_10
VCCA_SM_11
VCCA_SM_NCTF_1
VCCA_SM_NCTF_2
VCCA_SM_CK_1
VCCA_SM_CK_2
VCCA_TVA_DAC_1
VCCA_TVA_DAC_2
VCCA_TVB_DAC_1
VCCA_TVB_DAC_2
VCCA_TVC_DAC_1
VCCA_TVC_DAC_2
VCCD_CRT
VCCD_TVDAC
VCCD_QDAC
VCCD_HPLL
VCCD_PEG_PLL
VCCD_LVDS_1
VCCD_LVDS_2
VCC_AXD_1
VCC_AXD_2
VCC_AXD_3
VCC_AXD_4
VCC_AXD_5
VCC_AXD_6
VCC_AXD_NCTF
VCC_AXF_1
VCC_AXF_2
VCC_AXF_3
VCC_DMI
VCC_SM_CK_1
VCC_SM_CK_2
VCC_SM_CK_3
VCC_SM_CK_4
VCC_TX_LVDS
VCC_HV_1
VCC_HV_2
VCC_PEG_1
VCC_PEG_2
VCC_PEG_3
VCC_PEG_4
VCC_PEG_5
VCC_RXR_DMI_1
VCC_RXR_DMI_2
VTTLF1
VTTLF2
VTTLF3
INVENTEC
TITLE Potomac 10SG
SIZE A3
CODE CS
DOC. NUMBER Model_No
REV X01
SHEET 24 OF 63
CHANGE by Drawer_Name
30-Aug-2007

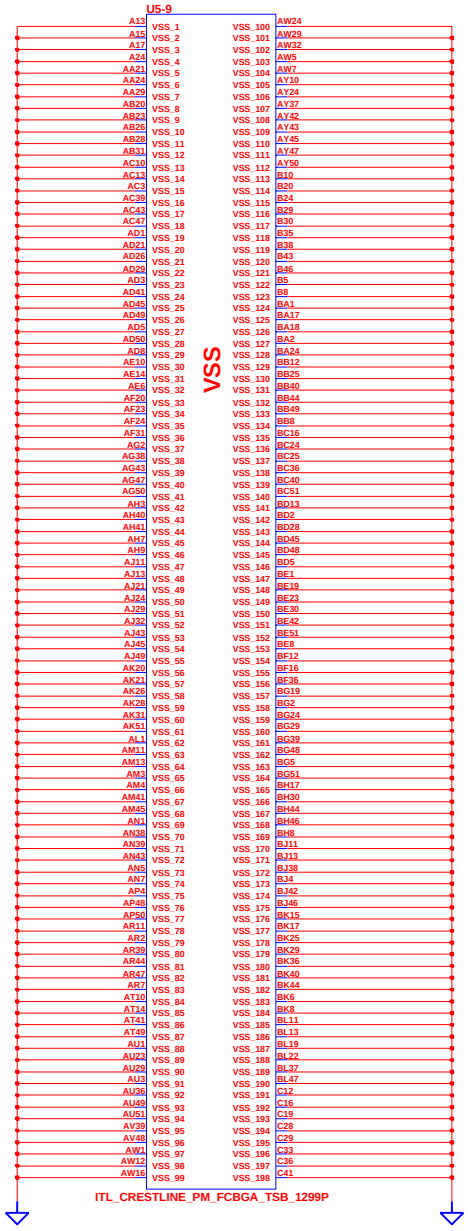

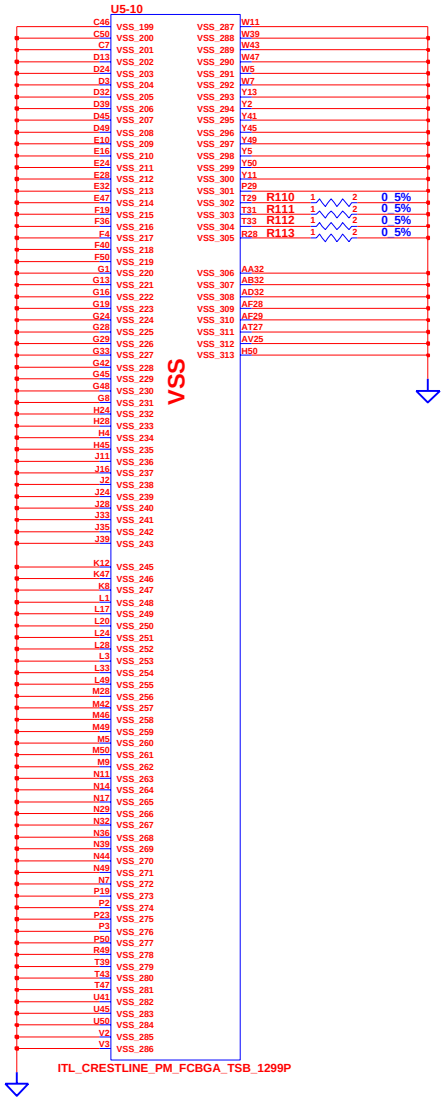

INVENTEC			
TITLE Potomac 10SG			
SIZE A3	CODE CS	DOC. NUMBER Model_No	REV X01
CHANGE by Drawer_Name	24-Aug-2007	SHEET 25 OF 63	

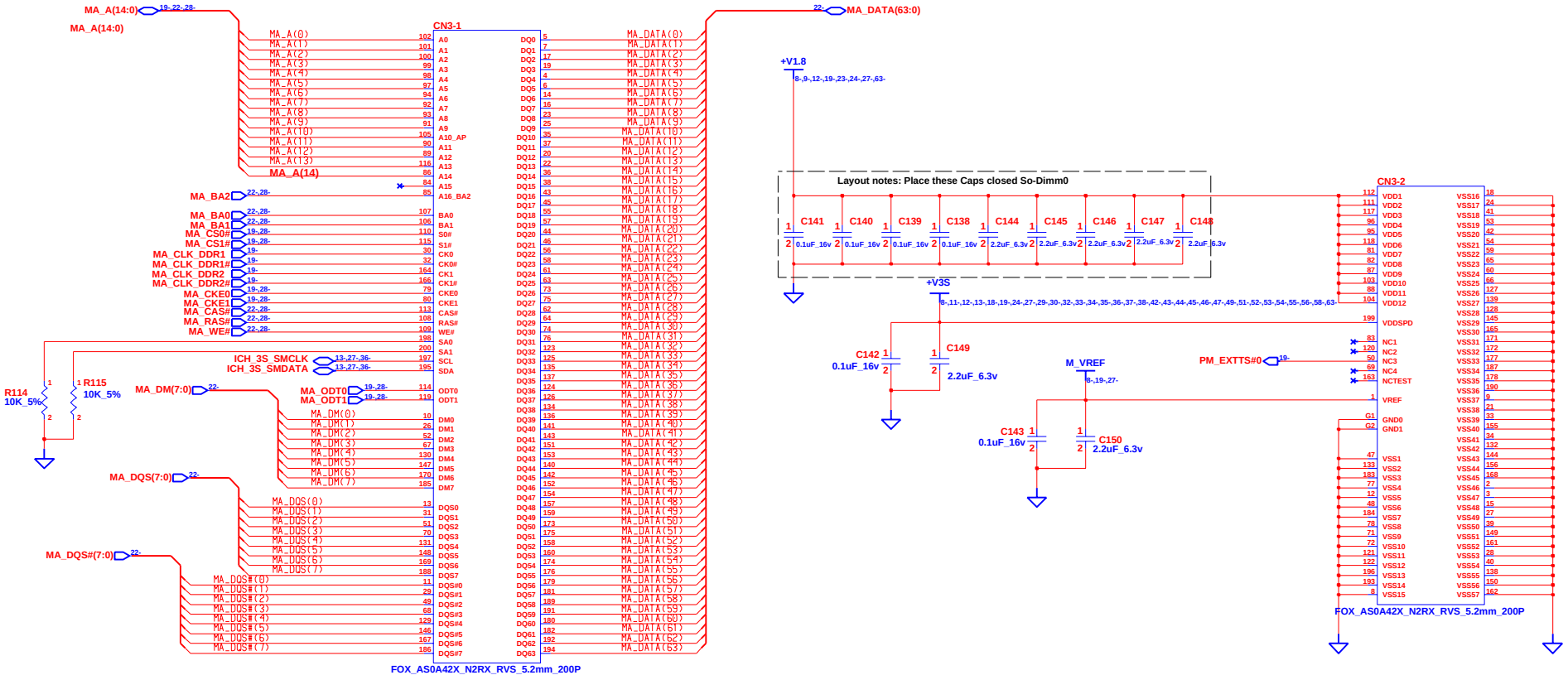

SO DIMM0

Slot A

INVENTEC			
TITLE Potomac 10SG			
SIZE A3	CODE CS	DOC. NUMBER Model_No	REV X01
CHANGE by Drawer_Name	23-Aug-2007	SHEET 26 OF 63	

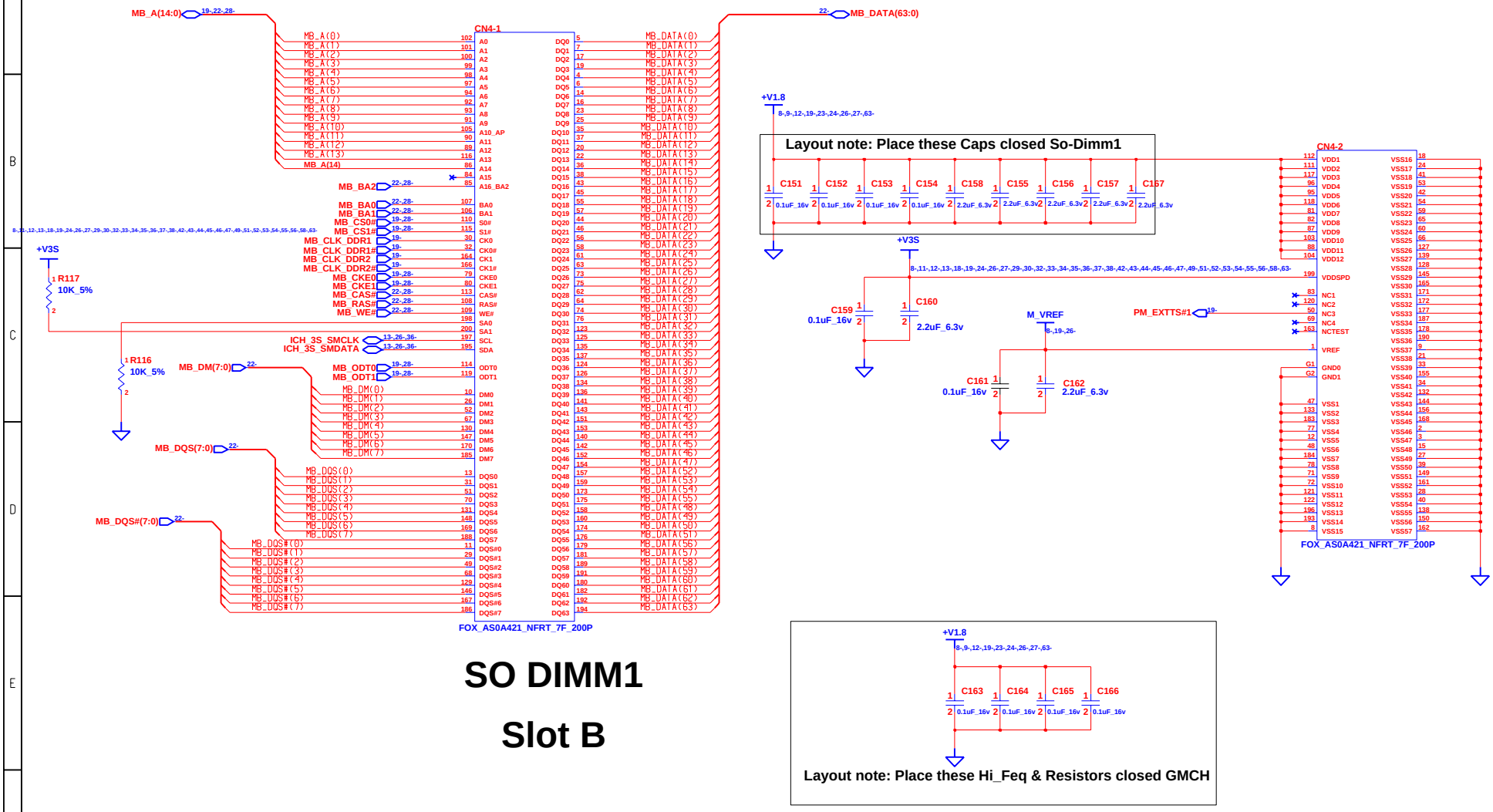

SO DIMM1

Slot B

INVENTEC			
TITLE Potomac 10SG			
SIZE A3	CODE CS	DOC. NUMBER Model_No	REV X01
CHANGE by Drawer_Name	23-Aug-2007	SHEET 27 OF 63	

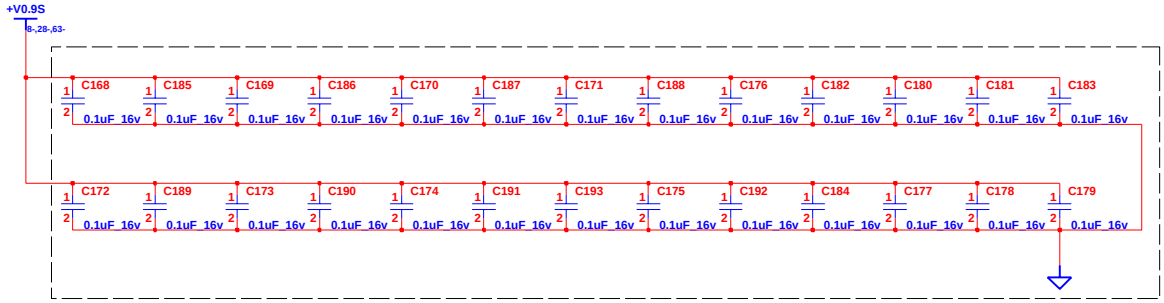

LAYOUT NOTES : PLACE ONE CAP CLOSE TO EVERY 2 PULL UP RESISTOR TERMINATED TO +V0.9S

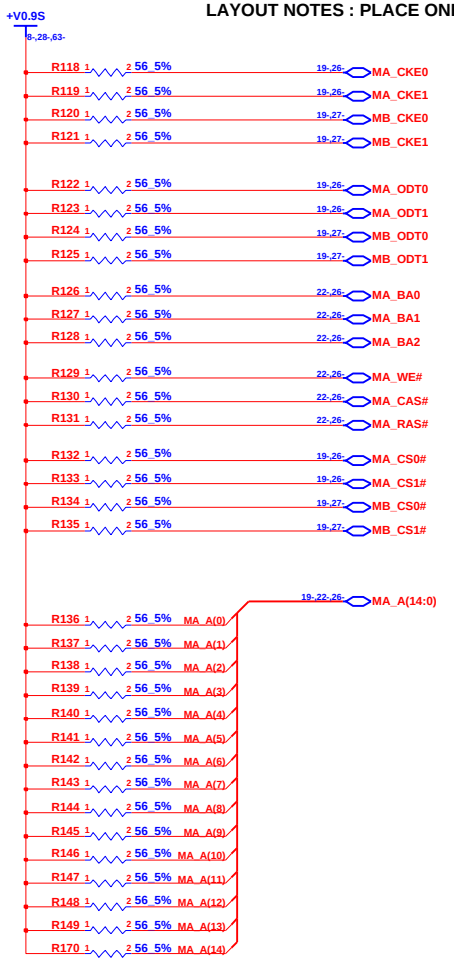

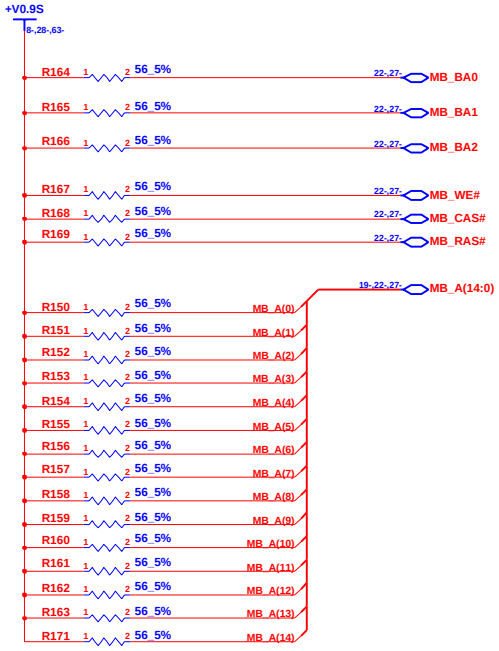

CHANGE by	Drawer_Name	23-Aug-2007	

INVENTEC

TITLE *Potomac 10SG*

SIZE	CODE	DOC. NUMBER	REV
A3	CS	Model_No	X01

SHEET 28 OF 63

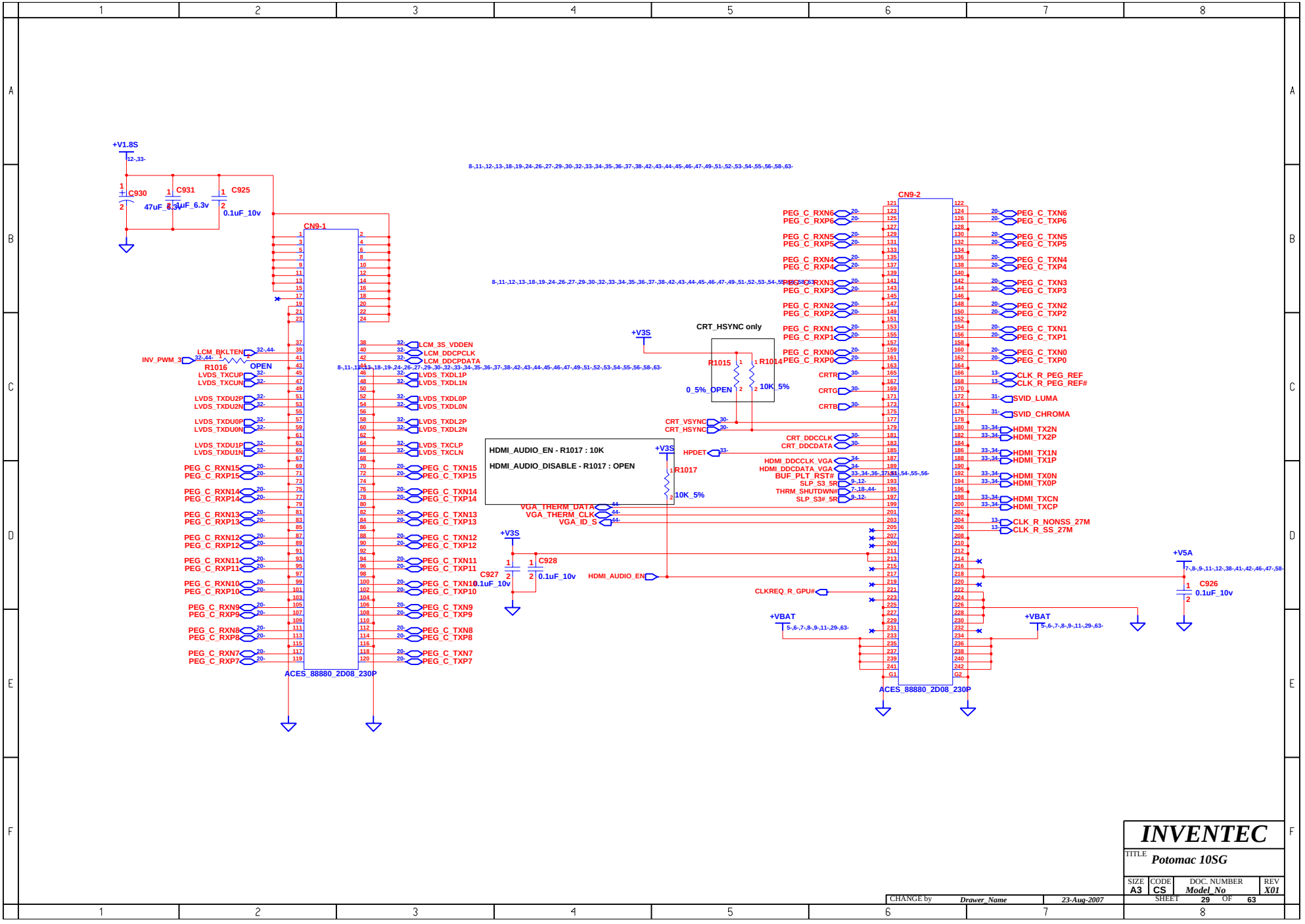
+V1.8S
C930
47uF_6.3v
C931
1uF_6.3v
C925
0.1uF_10v
CN9-1
ACES_88880_2D08_230P
LCM_BKLTEN
INV_PWM_3
R1016
OPEN
LVDS_TXCUP
LVDS_TXCUN
LVDS_TXDU2P
LVDS_TXDU2N
LVDS_TXDU0P
LVDS_TXDU0N
LVDS_TXDU1P
LVDS_TXDU1N
PEG_C_RXN15
PEG_C_RXP15
PEG_C_RXN14
PEG_C_RXP14
PEG_C_RXN13
PEG_C_RXP13
PEG_C_RXN12
PEG_C_RXP12
PEG_C_RXN11
PEG_C_RXP11
PEG_C_RXN10
PEG_C_RXP10
PEG_C_RXN9
PEG_C_RXP9
PEG_C_RXN8
PEG_C_RXP8
PEG_C_RXN7
PEG_C_RXP7
LCM_3S_VDDEN
LCM_DDCPCLK
LCM_DDCPDATA
LVDS_TXDL1P
LVDS_TXDL1N
LVDS_TXDL0P
LVDS_TXDL0N
LVDS_TXDL2P
LVDS_TXDL2N
LVDS_TXCLP
LVDS_TXCLN
PEG_C_TXN15
PEG_C_TXP15
PEG_C_TXN14
PEG_C_TXP14
PEG_C_TXN13
PEG_C_TXP13
PEG_C_TXN12
PEG_C_TXP12
PEG_C_TXN11
PEG_C_TXP11
PEG_C_TXN10
PEG_C_TXP10
PEG_C_TXN9
PEG_C_TXP9
PEG_C_TXN8
PEG_C_TXP8
PEG_C_TXN7
PEG_C_TXP7
CRT_HSYNC only
+V3S
R1015
0_5%_OPEN
R1014
10K_5%
CRT_VSYNC
CRT_HSYNC
HDMI_AUDIO_EN - R1017 : 10K
HDMI_AUDIO_DISABLE - R1017 : OPEN
R1017
10K_5%
HPDET
VGA_THERM_DATA
VGA_THERM_CLK
VGA_ID_S
C927
0.1uF_10v
C928
0.1uF_10v
HDMI_AUDIO_EN
CN9-2
ACES_88880_2D08_230P
PEG_C_RXN6
PEG_C_RXP6
PEG_C_RXN5
PEG_C_RXP5
PEG_C_RXN4
PEG_C_RXP4
PEG_C_RXN3
PEG_C_RXP3
PEG_C_RXN2
PEG_C_RXP2
PEG_C_RXN1
PEG_C_RXP1
PEG_C_RXN0
PEG_C_RXP0
CRTR
CRTG
CRTB
CRT_DDCCLK
CRT_DDCDATA
HDMI_DDCCLK_VGA
HDMI_DDCDATA_VGA
BUF_PLT_RST#
SLP_S3_5R
THRM_SHUTDWN#
SLP_S3#_5R
CLKREQ_R_GPU#
PEG_C_TXN6
PEG_C_TXP6
PEG_C_TXN5
PEG_C_TXP5
PEG_C_TXN4
PEG_C_TXP4
PEG_C_TXN3
PEG_C_TXP3
PEG_C_TXN2
PEG_C_TXP2
PEG_C_TXN1
PEG_C_TXP1
PEG_C_TXN0
PEG_C_TXP0
CLK_R_PEG_REF
CLK_R_PEG_REF#
SVID_LUMA
SVID_CHROMA
HDMI_TX2N
HDMI_TX2P
HDMI_TX1N
HDMI_TX1P
HDMI_TX0N
HDMI_TX0P
HDMI_TXCN
HDMI_TXCP
CLK_R_NONSS_27M
CLK_R_SS_27M
+VBAT
+V5A
C926
0.1uF_10v
INVENTEC
TITLE
Potomac 10SG
SIZE A3
CODE CS
DOC. NUMBER Model_No
REV X01
CHANGE by Drawer_Name
23-Aug-2007
SHEET 29 OF 63

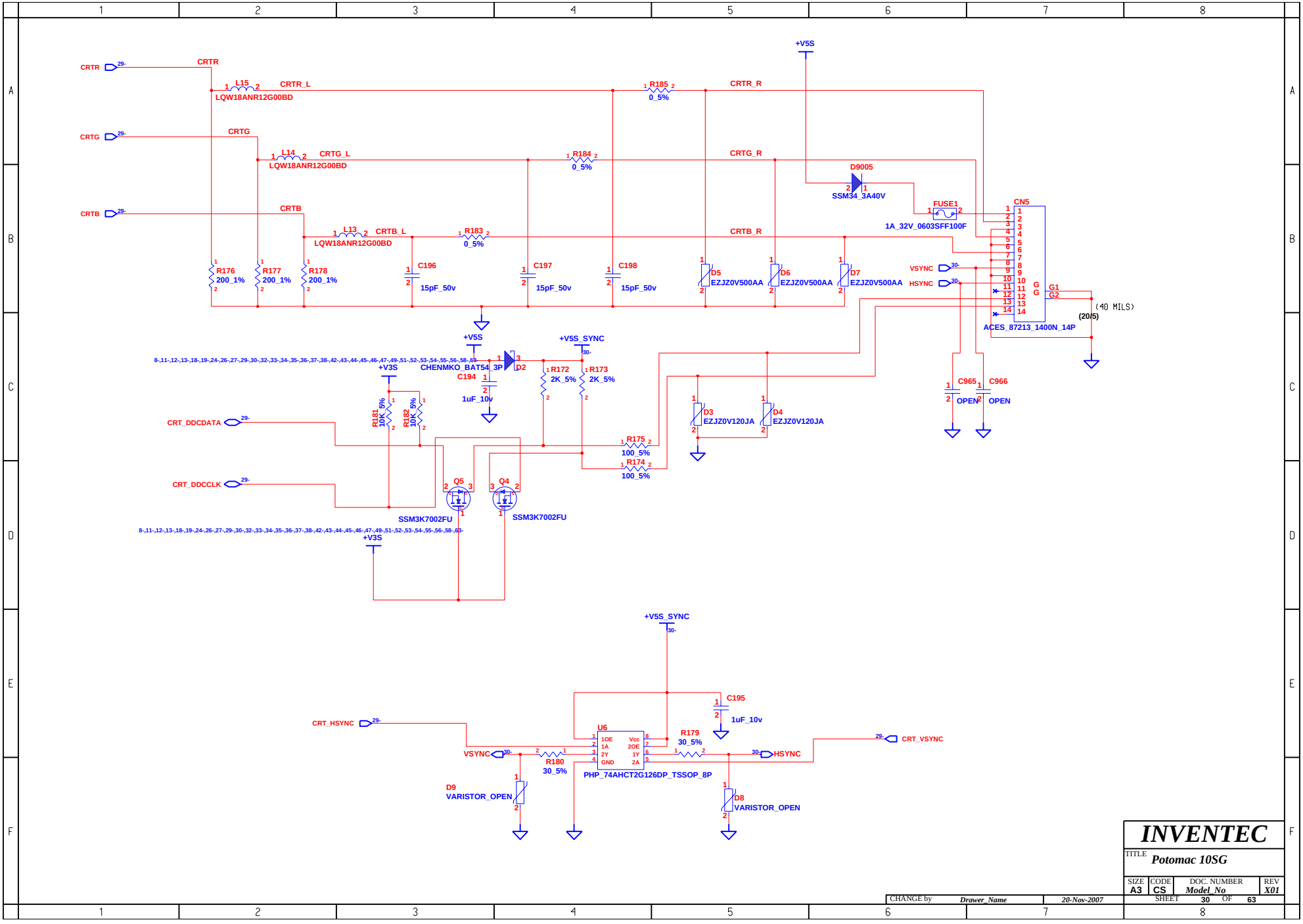

INVENTEC			
TITLE Potomac 10SG			
SIZE A3	CODE CS	DOC. NUMBER Model_No	REV X01
CHANGE by Drawer_Name	20-Nov-2007	SHEET 30 OF 63	

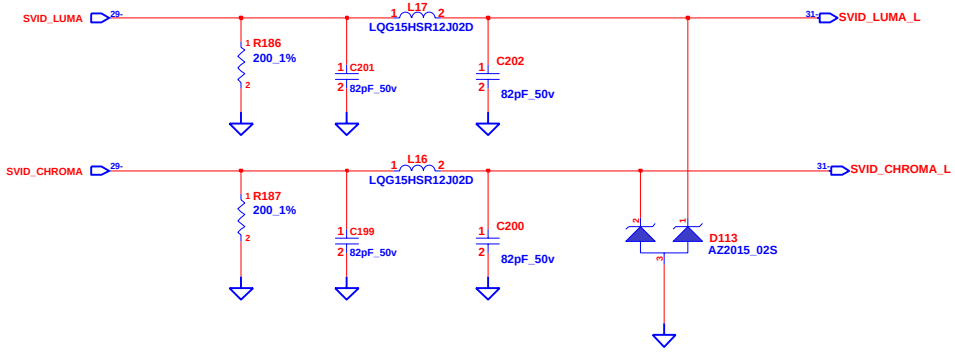

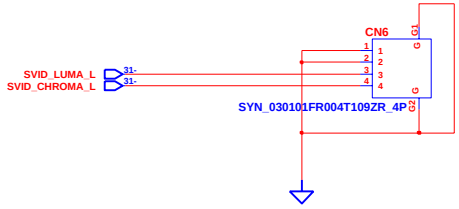

SVIDEO CN

CHANGE by	*Drawer_Name*	*14-Sep-2007*	

INVENTEC

TITLE *Potomac 10SG*

SIZE	CODE	DOC. NUMBER	REV
A3	CS	*Model_No*	*X01*

SHEET 31 OF 63

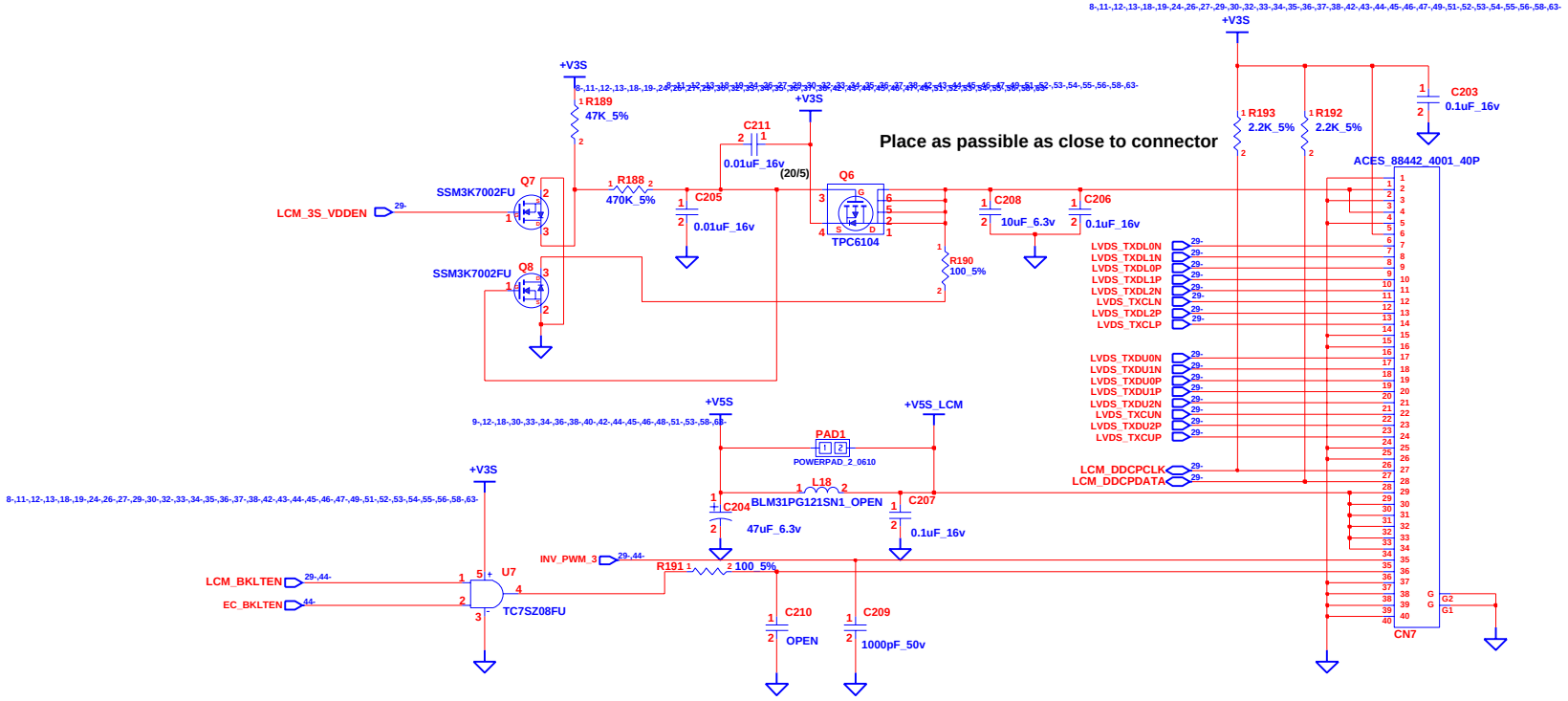

INVENTEC

TITLE *Potomac 10SG*

SIZE	CODE	DOC. NUMBER	REV
A3	CS	*Model_No*	*X01*

SHEET 32 OF 63

CHANGE by	*Drawer_Name*	*19-Nov-2007*

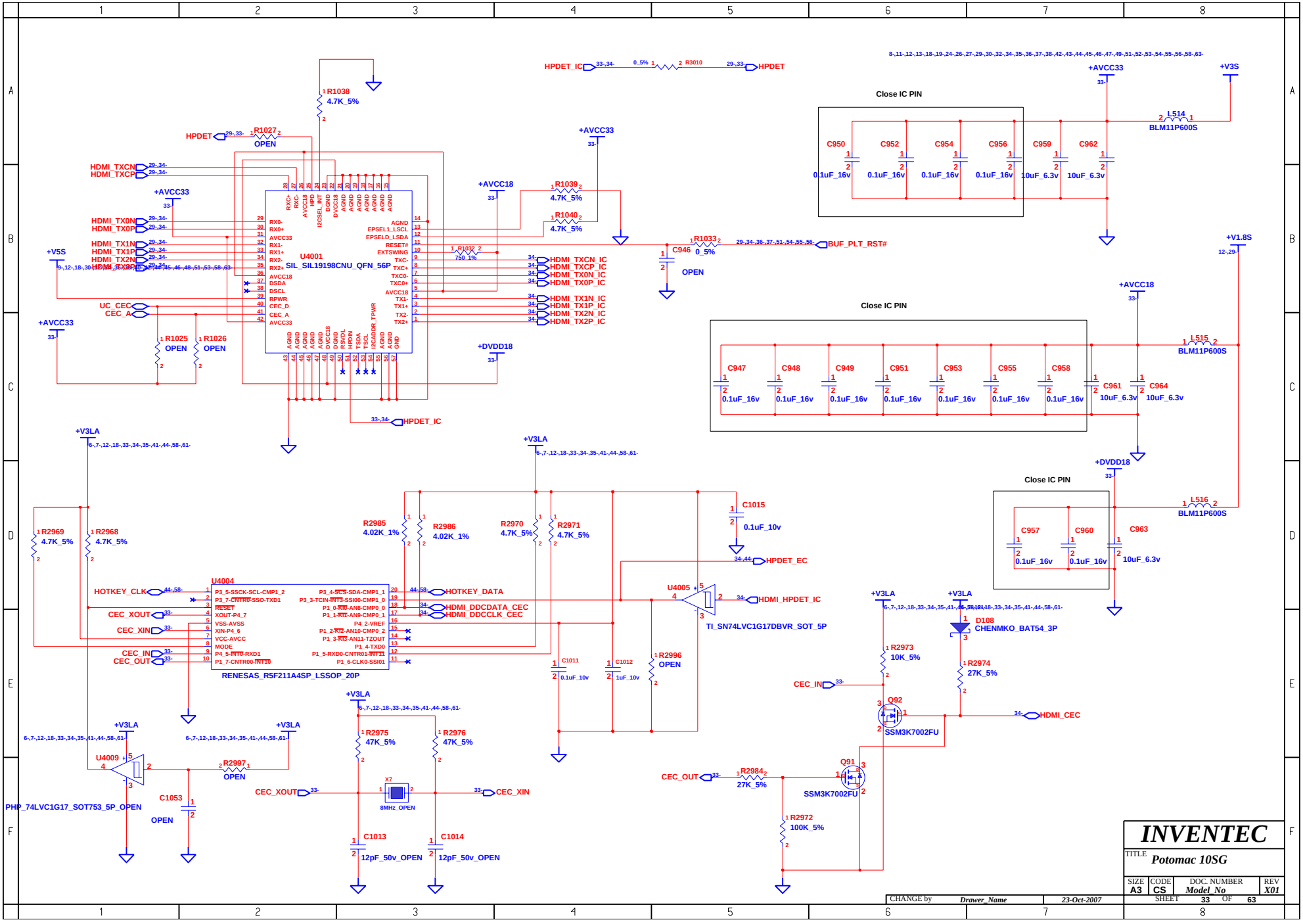
U4001
SIL_SIL19198CNU_QFN_56P
HDMI_TXCN
HDMI_TXCP
HDMI_TX0N
HDMI_TX0P
HDMI_TX1N
HDMI_TX1P
HDMI_TX2N
HDMI_TX2P
UC_CEC
CEC_A
HDMI_TXCN_IC
HDMI_TXCP_IC
HDMI_TX0N_IC
HDMI_TX0P_IC
HDMI_TX1N_IC
HDMI_TX1P_IC
HDMI_TX2N_IC
HDMI_TX2P_IC
HPDET_IC
HPDET
BUF_PLT_RST#
+AVCC33
+AVCC18
+DVDD18
+V5S
+V3S
+V1.8S
+V3LA
Close IC PIN
L514
BLM11P600S
L515
BLM11P600S
L516
BLM11P600S
U4004
RENESAS_R5F211A4SP_LSSOP_20P
HOTKEY_CLK
HOTKEY_DATA
CEC_XOUT
CEC_XIN
CEC_IN
CEC_OUT
HDMI_DDCDATA_CEC
HDMI_DDCCLK_CEC
HDMI_HPDET_IC
HPDET_EC
HDMI_CEC
U4005
TI_SN74LVC1G17DBVR_SOT_5P
U4009
PHP_74LVC1G17_SOT753_5P_OPEN
X7
8MHz_OPEN
D108
CHENMKO_BAT54_3P
Q92
SSM3K7002FU
Q91
SSM3K7002FU
INVENTEC
TITLE
Potomac 10SG
SIZE A3
CODE CS
DOC. NUMBER Model_No
REV X01
SHEET 33 OF 63
CHANGE by Drawer_Name
23-Oct-2007

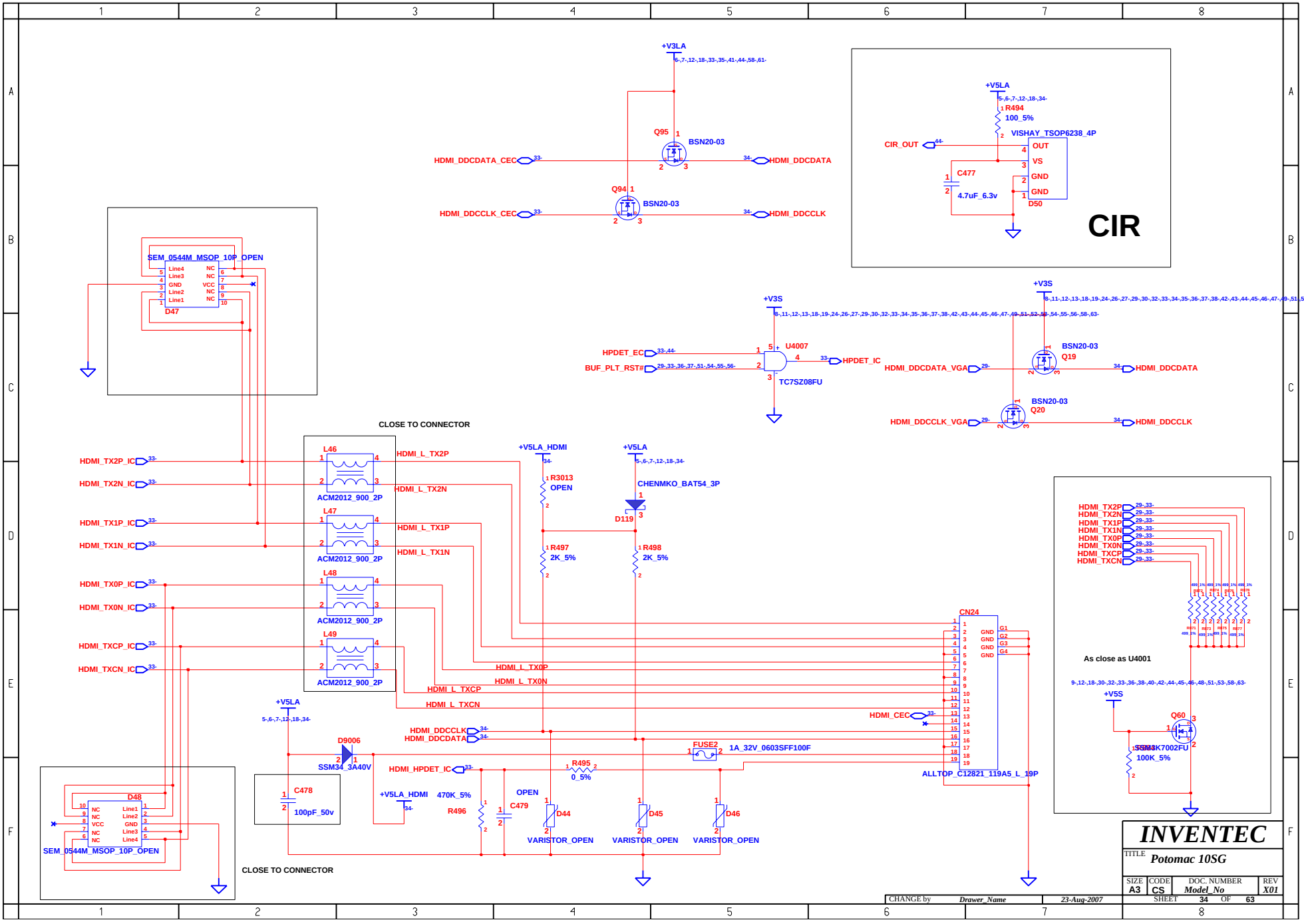
+V3LA
Q95
BSN20-03
HDMI_DDCDATA_CEC
HDMI_DDCDATA
Q94
BSN20-03
HDMI_DDCCLK_CEC
HDMI_DDCCLK
+V5LA
R494
100_5%
VISHAY_TSOP6238_4P
CIR_OUT
OUT
VS
GND
GND
C477
4.7uF_6.3v
D50
CIR
SEM_0544M_MSOP_10P_OPEN
D47
+V3S
U4007
HPDET_EC
BUF_PLT_RST#
HPDET_IC
TC7SZ08FU
BSN20-03
Q19
HDMI_DDCDATA_VGA
HDMI_DDCDATA
BSN20-03
Q20
HDMI_DDCCLK_VGA
HDMI_DDCCLK
CLOSE TO CONNECTOR
L46
ACM2012_900_2P
L47
ACM2012_900_2P
L48
ACM2012_900_2P
L49
ACM2012_900_2P
HDMI_TX2P_IC
HDMI_TX2N_IC
HDMI_TX1P_IC
HDMI_TX1N_IC
HDMI_TX0P_IC
HDMI_TX0N_IC
HDMI_TXCP_IC
HDMI_TXCN_IC
HDMI_L_TX2P
HDMI_L_TX2N
HDMI_L_TX1P
HDMI_L_TX1N
HDMI_L_TX0P
HDMI_L_TX0N
HDMI_L_TXCP
HDMI_L_TXCN
+V5LA_HDMI
R3013
OPEN
R497
2K_5%
+V5LA
CHENMKO_BAT54_3P
D119
R498
2K_5%
CN24
ALLTOP_C12821_119A5_L_19P
HDMI_CEC
HDMI_DDCCLK
HDMI_DDCDATA
FUSE2
1A_32V_0603SFF100F
R495
0_5%
HDMI_HPDET_IC
+V5LA
D9006
SSM34_3A40V
C478
100pF_50v
+V5LA_HDMI
470K_5%
R496
OPEN
C479
D44
VARISTOR_OPEN
D45
VARISTOR_OPEN
D46
VARISTOR_OPEN
D48
SEM_0544M_MSOP_10P_OPEN
CLOSE TO CONNECTOR
HDMI_TX2P
HDMI_TX2N
HDMI_TX1P
HDMI_TX1N
HDMI_TX0P
HDMI_TX0N
HDMI_TXCP
HDMI_TXCN
As close as U4001
+V5S
Q60
SSM3K7002FU
100K_5%
INVENTEC
TITLE
Potomac 10SG
SIZE A3
CODE CS
DOC. NUMBER Model_No
REV X01
SHEET 34 OF 63
CHANGE by Drawer_Name
23-Aug-2007

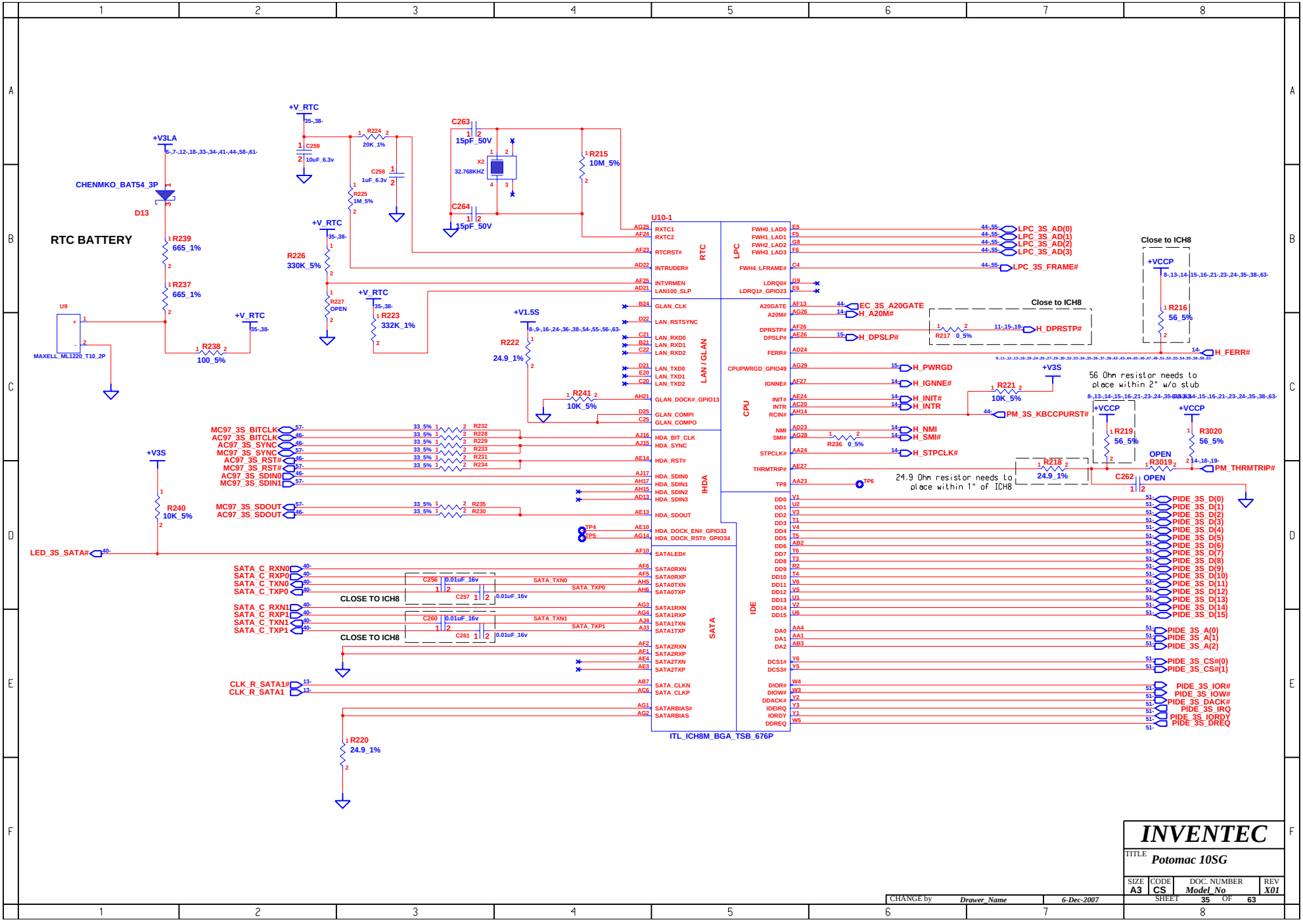
RTC BATTERY
CHENMKO_BAT54_3P
D13
+V3LA
R239 665_1%
R237 665_1%
R238 100_5%
U9
MAXELL_ML1220_T10_2P
+V_RTC
R226 330K_5%
R227 OPEN
R223 332K_1%
R224 20K_1%
R225 1M_5%
C259 10uF_6.3v
C258 1uF_6.3v
C263 15pF_50V
C264 15pF_50V
X2 32.768KHZ
R215 10M_5%
+V1.5S
R222 24.9_1%
R241 10K_5%
U10-1
ITL_ICH8M_BGA_TSB_676P
RTC
LAN / GLAN
IHDA
SATA
LPC
CPU
IDE
LPC_3S_AD(0)
LPC_3S_AD(1)
LPC_3S_AD(2)
LPC_3S_AD(3)
LPC_3S_FRAME#
EC_3S_A20GATE
H_A20M#
H_DPRSTP#
H_DPSLP#
H_FERR#
H_PWRGD
H_IGNNE#
H_INIT#
H_INTR
PM_3S_KBCCPURST#
H_NMI
H_SMI#
H_STPCLK#
PM_THRMTRIP#
Close to ICH8
+VCCP
R216 56_5%
R217 0_5%
R221 10K_5%
+V3S
56 Ohm resistor needs to place within 2" w/o stub
R219 56_5%
R3020 56_5%
R3019 OPEN
R218 24.9_1%
24.9 Ohm resistor needs to place within 1" of ICH8
C262 OPEN
MC97_3S_BITCLK
AC97_3S_BITCLK
AC97_3S_SYNC
MC97_3S_SYNC
AC97_3S_RST#
MC97_3S_RST#
AC97_3S_SDIN0
MC97_3S_SDIN1
MC97_3S_SDOUT
AC97_3S_SDOUT
R232
R228
R229
R233
R231
R234
R235
R230
R240 10K_5%
LED_3S_SATA#
SATA_C_RXN0
SATA_C_RXP0
SATA_C_TXN0
SATA_C_TXP0
SATA_C_RXN1
SATA_C_RXP1
SATA_C_TXN1
SATA_C_TXP1
C256 0.01uF_16v
C257 0.01uF_16v
C260 0.01uF_16v
C261 0.01uF_16v
CLOSE TO ICH8
CLK_R_SATA1#
CLK_R_SATA1
R220 24.9_1%
PIDE_3S_D(0)
PIDE_3S_D(1)
PIDE_3S_D(2)
PIDE_3S_D(3)
PIDE_3S_D(4)
PIDE_3S_D(5)
PIDE_3S_D(6)
PIDE_3S_D(7)
PIDE_3S_D(8)
PIDE_3S_D(9)
PIDE_3S_D(10)
PIDE_3S_D(11)
PIDE_3S_D(12)
PIDE_3S_D(13)
PIDE_3S_D(14)
PIDE_3S_D(15)
PIDE_3S_A(0)
PIDE_3S_A(1)
PIDE_3S_A(2)
PIDE_3S_CS#(0)
PIDE_3S_CS#(1)
PIDE_3S_IOR#
PIDE_3S_IOW#
PIDE_3S_DACK#
PIDE_3S_IRQ
PIDE_3S_IORDY
PIDE_3S_DREQ
INVENTEC
TITLE Potomac 10SG
SIZE A3
CODE CS
DOC. NUMBER Model_No
REV X01
CHANGE by Drawer_Name
6-Dec-2007
SHEET 35 OF 63

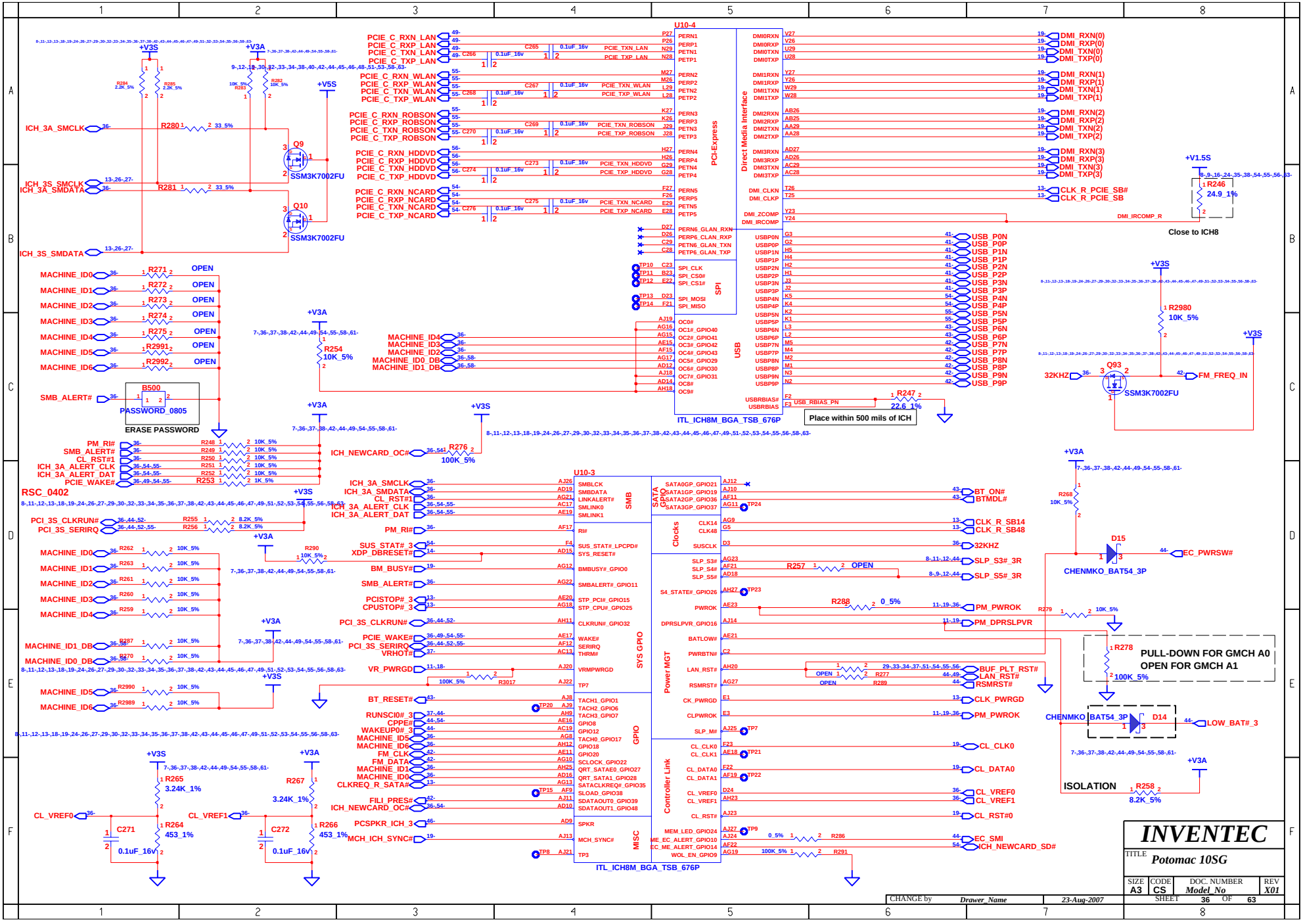
U10-4
PCI-Express
Direct Media Interface
SPI
USB
ITL_ICH8M_BGA_TSB_676P
Place within 500 mils of ICH
Close to ICH8
U10-3
SMB
SATA GPIO
Clocks
SYS GPIO
Power MGT
GPIO
Controller Link
MISC
ITL_ICH8M_BGA_TSB_676P
PULL-DOWN FOR GMCH A0
OPEN FOR GMCH A1
ISOLATION
ERASE PASSWORD
INVENTEC
TITLE Potomac 10SG
SIZE A3
CODE CS
DOC. NUMBER Model_No
REV X01
SHEET 36 OF 63
CHANGE by Drawer_Name
23-Aug-2007

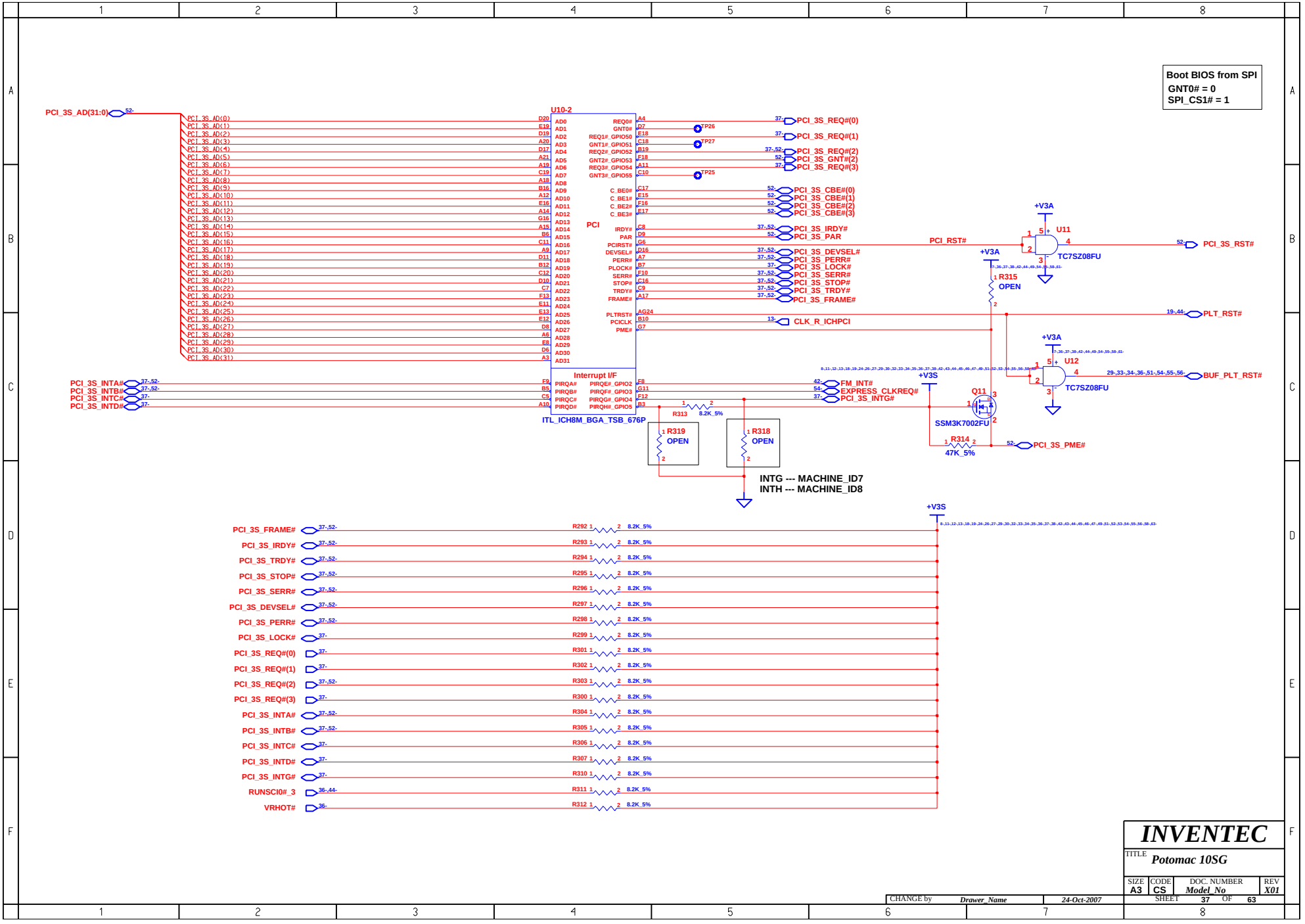
Boot BIOS from SPI
GNT0# = 0
SPI_CS1# = 1
U10-2
PCI
Interrupt I/F
ITL_ICH8M_BGA_TSB_676P
PCI_3S_AD(31:0)
PCI_3S_REQ#(0)
PCI_3S_REQ#(1)
PCI_3S_REQ#(2)
PCI_3S_GNT#(2)
PCI_3S_REQ#(3)
PCI_3S_CBE#(0)
PCI_3S_CBE#(1)
PCI_3S_CBE#(2)
PCI_3S_CBE#(3)
PCI_3S_IRDY#
PCI_3S_PAR
PCI_3S_DEVSEL#
PCI_3S_PERR#
PCI_3S_LOCK#
PCI_3S_SERR#
PCI_3S_STOP#
PCI_3S_TRDY#
PCI_3S_FRAME#
CLK_R_ICHPCI
PCI_RST#
PCI_3S_RST#
PLT_RST#
BUF_PLT_RST#
PCI_3S_PME#
PCI_3S_INTA#
PCI_3S_INTB#
PCI_3S_INTC#
PCI_3S_INTD#
FM_INT#
EXPRESS_CLKREQ#
PCI_3S_INTG#
+V3A
+V3S
U11
U12
TC7SZ08FU
SSM3K7002FU
R315 OPEN
R319 OPEN
R318 OPEN
R313 8.2K_5%
R314 47K_5%
INTG --- MACHINE_ID7
INTH --- MACHINE_ID8
RUNSCI0#_3
VRHOT#
INVENTEC
TITLE Potomac 10SG
SIZE A3
CODE CS
DOC. NUMBER Model_No
REV X01
SHEET 37 OF 63
CHANGE by Drawer_Name
24-Oct-2007

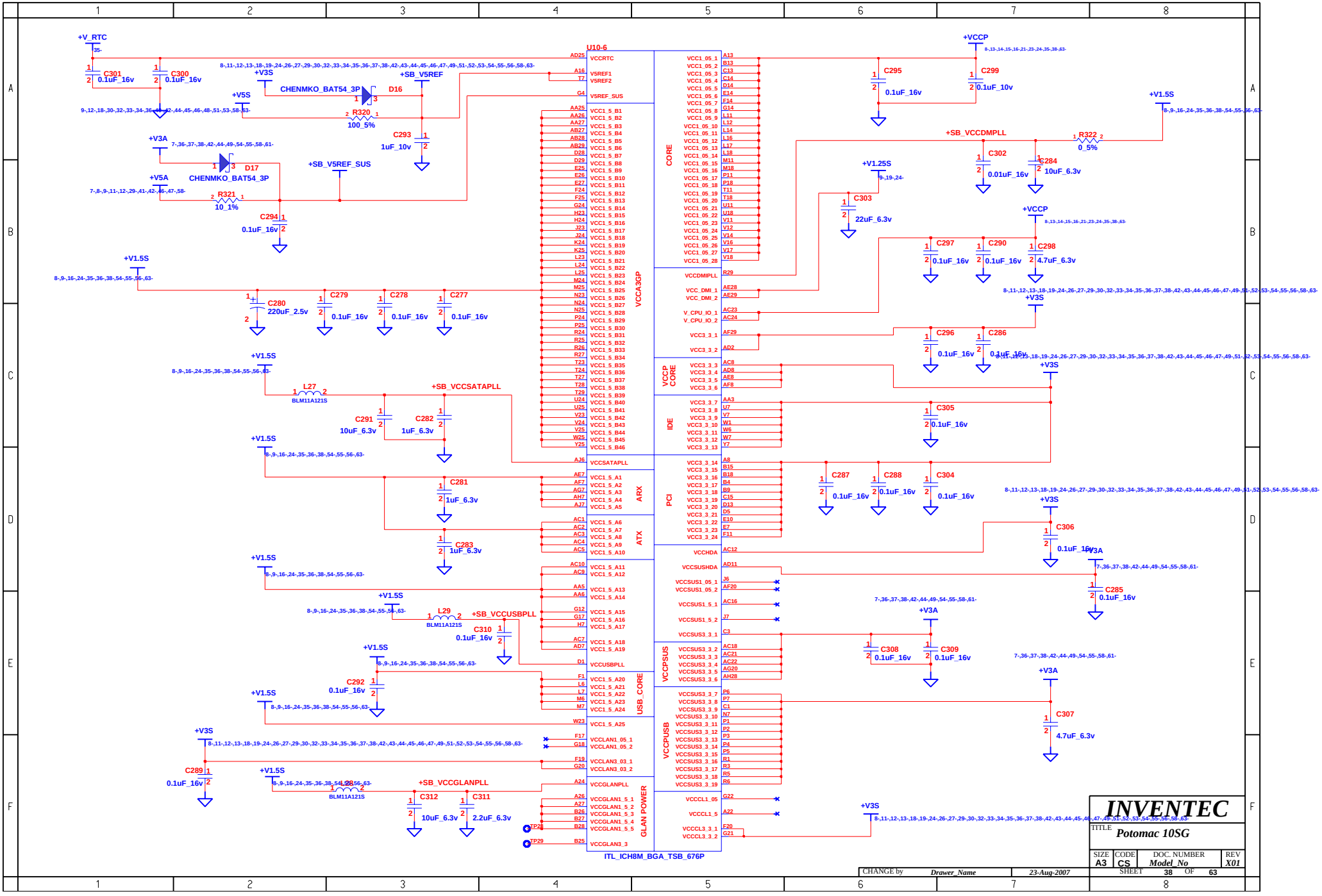
U10-6
ITL_ICH8M_BGA_TSB_676P
CORE
VCCA3GP
VCCP CORE
IDE
PCI
ARX
ATX
USB_CORE
VCCPSUS
VCCPUSB
GLAN POWER
+V_RTC
C301 0.1uF_16v
C300 0.1uF_16v
+V3S
+V5S
CHENMKO_BAT54_3P
D16
R320 100_5%
+SB_V5REF
C293 1uF_10v
+V3A
D17
CHENMKO_BAT54_3P
+V5A
R321 10_1%
C294 0.1uF_16v
+SB_V5REF_SUS
+V1.5S
C280 220uF_2.5v
C279 0.1uF_16v
C278 0.1uF_16v
C277 0.1uF_16v
L27 BLM11A121S
+SB_VCCSATAPLL
C291 10uF_6.3v
C282 1uF_6.3v
C281 1uF_6.3v
C283 1uF_6.3v
L29 BLM11A121S
+SB_VCCUSBPLL
C310 0.1uF_16v
C292 0.1uF_16v
C289 0.1uF_16v
L28 BLM11A121S
+SB_VCCGLANPLL
C312 10uF_6.3v
C311 2.2uF_6.3v
TP28
TP29
+VCCP
C295 0.1uF_16v
C299 0.1uF_10v
+SB_VCCDMPLL
R322 0_5%
C302 0.01uF_16v
C284 10uF_6.3v
+V1.25S
C303 22uF_6.3v
C297 0.1uF_16v
C290 0.1uF_16v
C298 4.7uF_6.3v
C296 0.1uF_16v
C286 0.1uF_16v
C305 0.1uF_16v
C287 0.1uF_16v
C288 0.1uF_16v
C304 0.1uF_16v
C306 0.1uF_16v
C285 0.1uF_16v
C308 0.1uF_16v
C309 0.1uF_16v
C307 4.7uF_6.3v
INVENTEC
TITLE Potomac 10SG
SIZE A3
CODE CS
DOC. NUMBER Model_No
REV X01
SHEET 38 OF 63
CHANGE by Drawer_Name
23-Aug-2007

U10-5

A23	VSS001	VSS099	K7
A5	VSS002	VSS100	L1
AA2	VSS003	VSS101	L13
AA7	VSS004	VSS102	L15
A25	VSS005	VSS103	L26
AB1	VSS006	VSS104	L27
AB24	VSS007	VSS105	L4
AC11	VSS008	VSS106	L5
AC14	VSS009	VSS107	M12
AC25	VSS010	VSS108	M13
AC26	VSS011	VSS109	M14
AC27	VSS012	VSS110	M15
AD17	VSS013	VSS111	M16
AD20	VSS014	VSS112	M17
AD28	VSS015	VSS113	M23
AD29	VSS016	VSS114	M28
AD3	VSS017	VSS115	M29
AD4	VSS018	VSS116	M3
AD6	VSS019	VSS117	N1
AE1	VSS020	VSS118	N11
AE12	VSS021	VSS119	N12
AE2	VSS022	VSS120	N13
AE22	VSS023	VSS121	N14
AD1	VSS024	VSS122	N15
AE25	VSS025	VSS123	N16
AE5	VSS026	VSS124	N17
AE6	VSS027	VSS125	N18
AE9	VSS028	VSS126	N26
AF14	VSS029	VSS127	N27
AF16	VSS030	VSS128	N4
AF18	VSS031	VSS129	N5
AF3	VSS032	VSS130	N6
AF4	VSS033	VSS131	P12
AG5	VSS034	VSS132	P13
AG6	VSS035	VSS133	P14
AH10	VSS036	VSS134	P15
AH13	VSS037	VSS135	P16
AH16	VSS038	VSS136	P17
AH19	VSS039	VSS137	P23
AH2	VSS040	VSS138	P28
AF28	VSS041	VSS139	P29
AH22	VSS042	VSS140	R11
AH24	VSS043	VSS141	R12
AH26	VSS044	VSS142	R13
AH3	VSS045	VSS143	R14
AH4	VSS046	VSS144	R15
AH8	VSS047	VSS145	R16
AJ5	VSS048	VSS146	R17
B11	VSS049	VSS147	R18
B14	VSS050	VSS148	R28
B17	VSS051	VSS149	R4
B2	VSS052	VSS150	T12
B20	VSS053	VSS151	T13
B22	VSS054	VSS152	T14
B8	VSS055	VSS153	T15
C24	VSS056	VSS154	T16
C26	VSS057	VSS155	T17
C27	VSS058	VSS156	T2
C6	VSS059	VSS157	U12
D12	VSS060	VSS158	U13
D15	VSS061	VSS159	U14
D18	VSS062	VSS160	U15
D2	VSS063	VSS161	U16
D4	VSS064	VSS162	U17
E21	VSS065	VSS163	U23
E24	VSS066	VSS164	U26
E4	VSS067	VSS165	U27
E9	VSS068	VSS166	U3
F15	VSS069	VSS167	U5
E23	VSS070	VSS168	V13
F28	VSS071	VSS169	V15
F29	VSS072	VSS170	V28
F7	VSS073	VSS171	V29
G1	VSS074	VSS172	W2
E2	VSS075	VSS173	W26
G10	VSS076	VSS174	W27
G13	VSS077	VSS175	Y28
G19	VSS078	VSS176	Y29
G23	VSS079	VSS177	Y4
G25	VSS080	VSS178	AB4
G26	VSS081	VSS179	AB23
G27	VSS082	VSS180	AB5
H25	VSS083	VSS181	AB6
H28	VSS084	VSS182	AD5
H29	VSS085	VSS183	U4
H3	VSS086	VSS184	W24
H6	VSS087	VSS_NCTF_01	A1
J1	VSS088	VSS_NCTF_02	A2
J25	VSS089	VSS_NCTF_03	A28
J26	VSS090	VSS_NCTF_04	A29
J27	VSS091	VSS_NCTF_05	AH1
J4	VSS092	VSS_NCTF_06	AH29
J5	VSS093	VSS_NCTF_07	AJ1
K23	VSS094	VSS_NCTF_08	AJ2
K28	VSS095	VSS_NCTF_09	AJ28
K29	VSS096	VSS_NCTF_010	AJ29
K3	VSS097	VSS_NCTF_011	B1
K6	VSS098	VSS_NCTF_012	B29

ITL_ICH8M_BGA_TSB_676P

INVENTEC

TITLE Potomac 10SG

SIZE	CODE	DOC. NUMBER	REV
A3	CS	Model_No	X01

CHANGE by Drawer_Name 23-Aug-2007

SHEET 39 OF 63

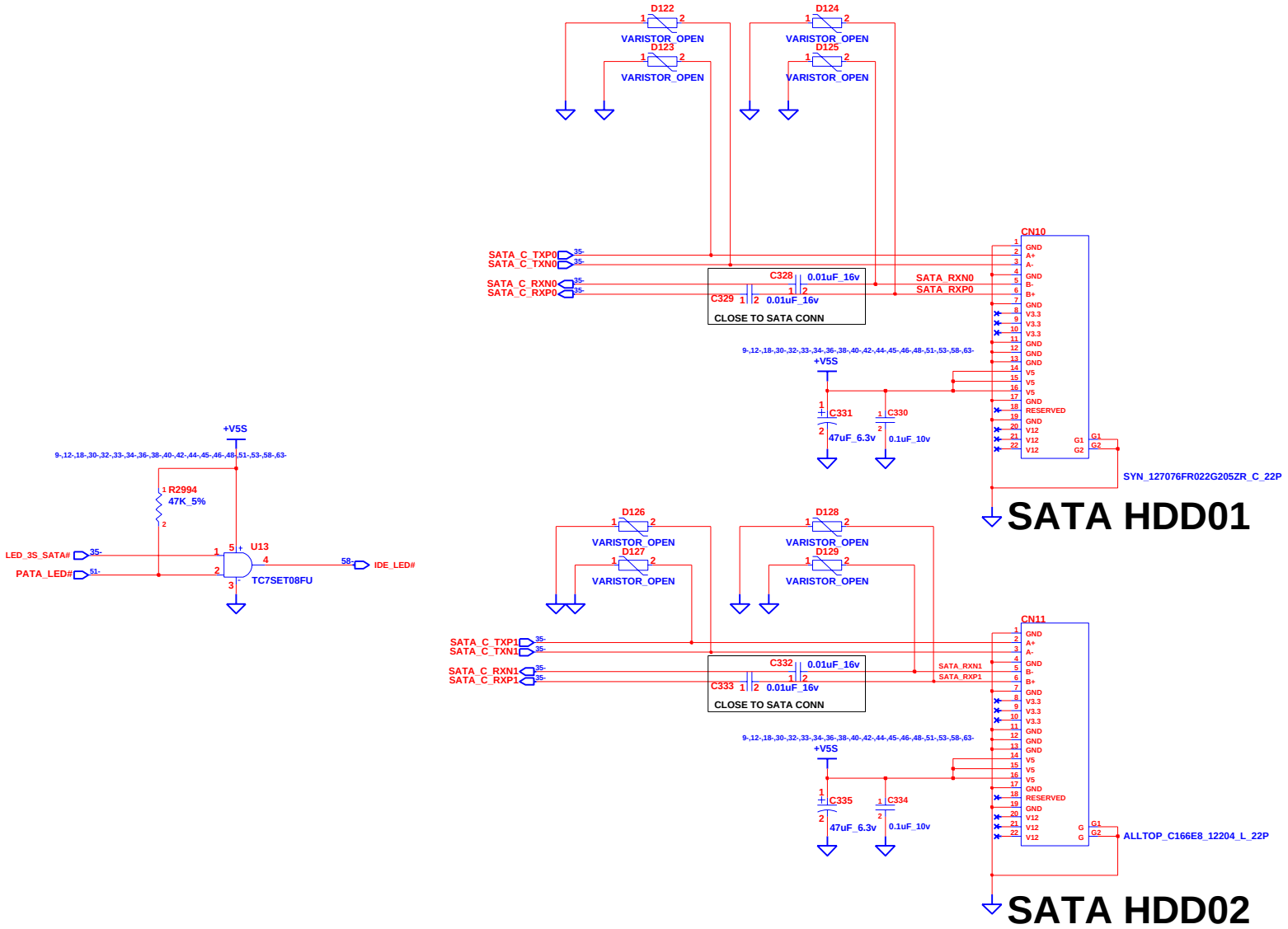

INVENTEC			
TITLE Potomac 10SG			
SIZE A3	CODE CS	DOC. NUMBER Model_No	REV X01
CHANGE by Drawer_Name	11-Jan-2008	SHEET 40 OF 63	

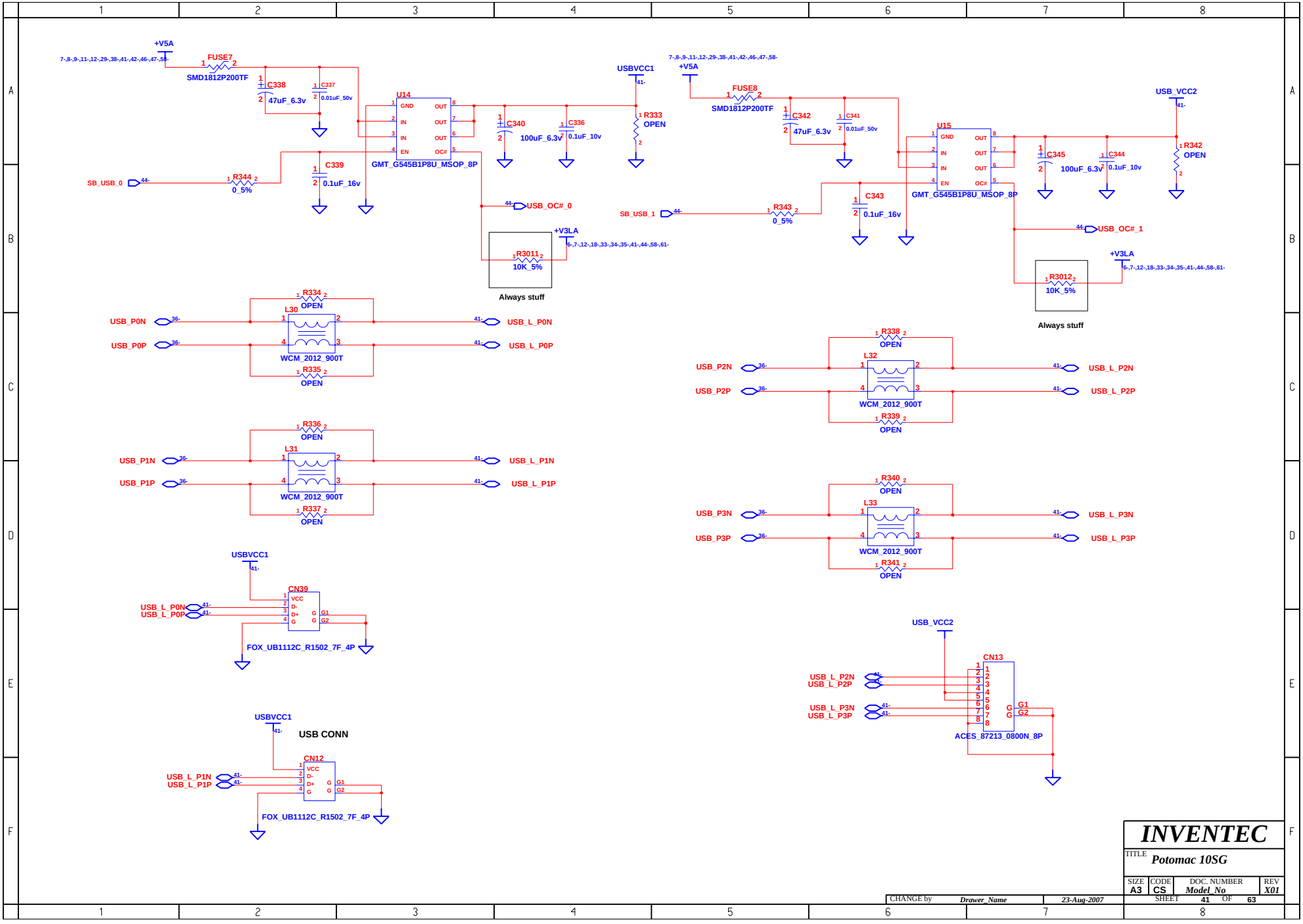
+V5A
7-,8-,9-,11-,12-,29-,38-,41-,42-,46-,47-,58-
FUSE7
SMD1812P200TF
C338
47uF_6.3v
C337
0.01uF_50v
C339
0.1uF_16v
SB_USB_0
R344
0_5%
U14
GMT_G545B1P8U_MSOP_8P
C340
100uF_6.3v
C336
0.1uF_10v
USBVCC1
R333
OPEN
USB_OC#_0
+V3LA
6-,7-,12-,18-,33-,34-,35-,41-,44-,58-,61-
R3011
10K_5%
Always stuff
FUSE8
SMD1812P200TF
C342
47uF_6.3v
C341
0.01uF_50v
U15
GMT_G545B1P8U_MSOP_8P
C343
0.1uF_16v
SB_USB_1
R343
0_5%
USB_VCC2
C345
100uF_6.3v
C344
0.1uF_10v
R342
OPEN
USB_OC#_1
R3012
10K_5%
Always stuff
R334
OPEN
L30
WCM_2012_900T
R335
OPEN
USB_P0N
USB_P0P
USB_L_P0N
USB_L_P0P
R336
OPEN
L31
WCM_2012_900T
R337
OPEN
USB_P1N
USB_P1P
USB_L_P1N
USB_L_P1P
R338
OPEN
L32
WCM_2012_900T
R339
OPEN
USB_P2N
USB_P2P
USB_L_P2N
USB_L_P2P
R340
OPEN
L33
WCM_2012_900T
R341
OPEN
USB_P3N
USB_P3P
USB_L_P3N
USB_L_P3P
USBVCC1
CN39
VCC
D-
D+
G
G1
G2
FOX_UB1112C_R1502_7F_4P
USB_L_P0N
USB_L_P0P
USB_VCC2
CN13
ACES_87213_0800N_8P
USB_L_P2N
USB_L_P2P
USB_L_P3N
USB_L_P3P
USBVCC1
USB CONN
CN12
FOX_UB1112C_R1502_7F_4P
USB_L_P1N
USB_L_P1P
INVENTEC
TITLE
Potomac 10SG
SIZE A3
CODE CS
DOC. NUMBER Model_No
REV X01
CHANGE by Drawer_Name
23-Aug-2007
SHEET 41 OF 63

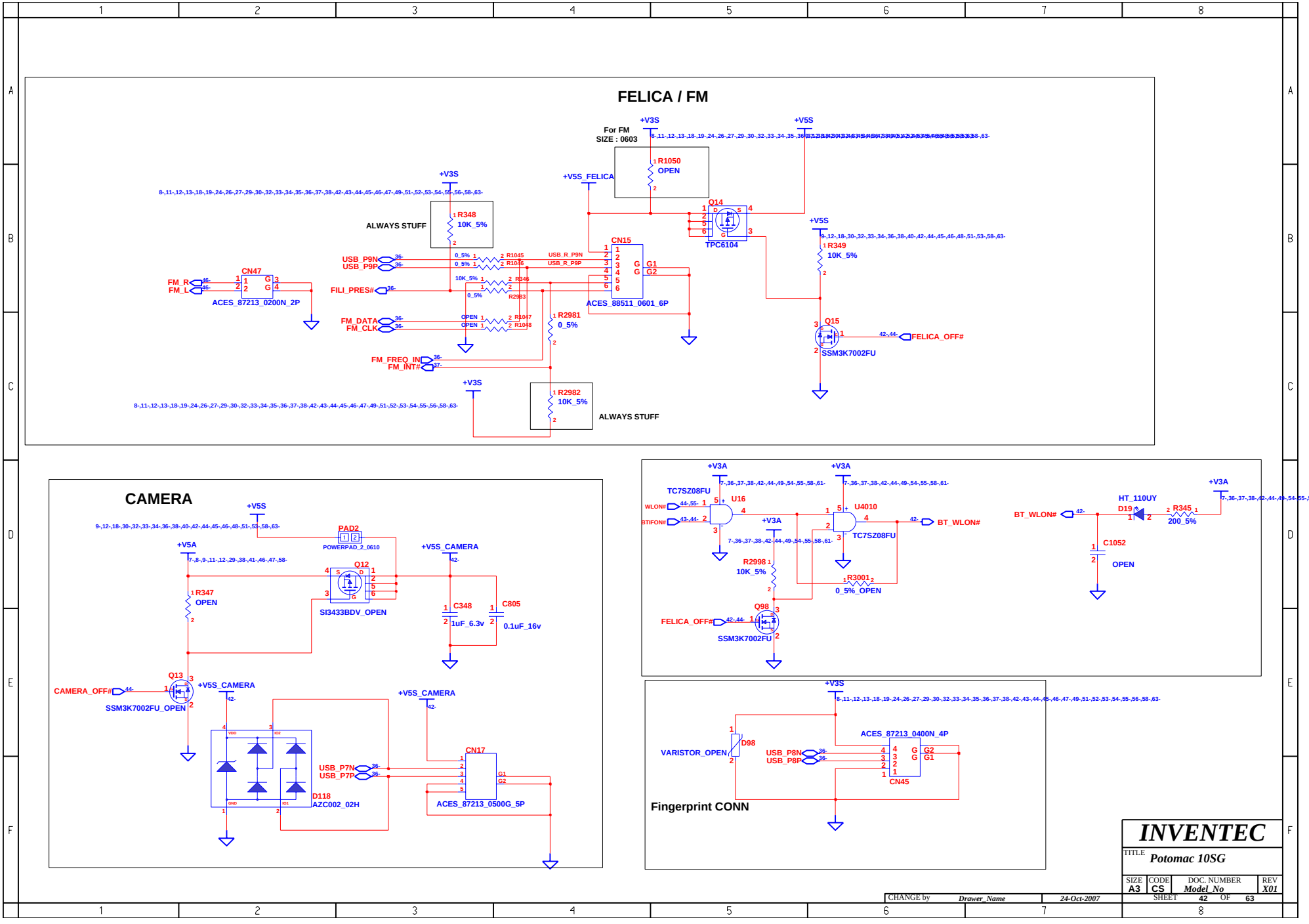
FELICA / FM
For FM
SIZE : 0603
+V3S
+V5S
R1050
OPEN
+V5S_FELICA
Q14
TPC6104
R348
10K_5%
ALWAYS STUFF
CN15
ACES_88511_0601_6P
R349
10K_5%
USB_P9N
USB_P9P
USB_R_P9N
USB_R_P9P
R1045
R1046
R346
R2983
CN47
ACES_87213_0200N_2P
FM_R
FM_L
FILI_PRES#
FM_DATA
FM_CLK
R1047
R1048
R2981
0_5%
Q15
SSM3K7002FU
FELICA_OFF#
FM_FREQ_IN
FM_INT#
R2982
10K_5%
ALWAYS STUFF
CAMERA
+V5S
PAD2
POWERPAD_2_0610
+V5A
+V5S_CAMERA
Q12
SI3433BDV_OPEN
R347
OPEN
C348
1uF_6.3v
C805
0.1uF_16v
Q13
SSM3K7002FU_OPEN
CAMERA_OFF#
D118
AZC002_02H
USB_P7N
USB_P7P
CN17
ACES_87213_0500G_5P
+V3A
TC7SZ08FU
U16
WLON#
BTIFON#
U4010
BT_WLON#
HT_110UY
D19
R345
200_5%
C1052
OPEN
R2998
10K_5%
R3001
0_5%_OPEN
Q98
SSM3K7002FU
FELICA_OFF#
VARISTOR_OPEN
D98
ACES_87213_0400N_4P
USB_P8N
USB_P8P
CN45
Fingerprint CONN
INVENTEC
TITLE
Potomac 10SG
SIZE
A3
CODE
CS
DOC. NUMBER
Model_No
REV
X01
CHANGE by
Drawer_Name
24-Oct-2007
SHEET
42
OF
63

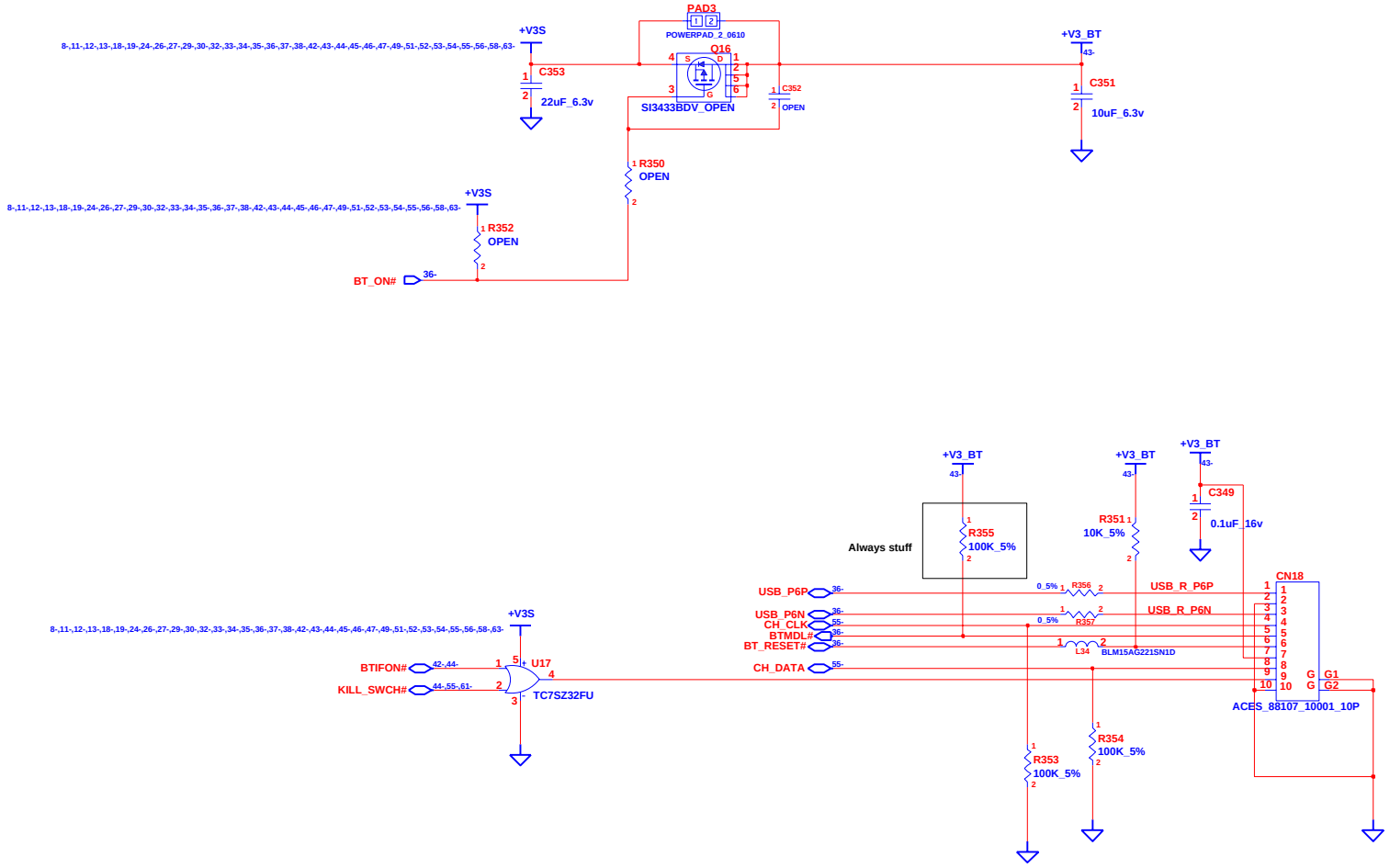

INVENTEC

TITLE *Potomac 10SG*

SIZE	CODE	DOC. NUMBER	REV
A3	CS	*Model_No*	*X01*

SHEET 43 OF 63

CHANGE by	*Drawer_Name*	*8-Oct-2007*

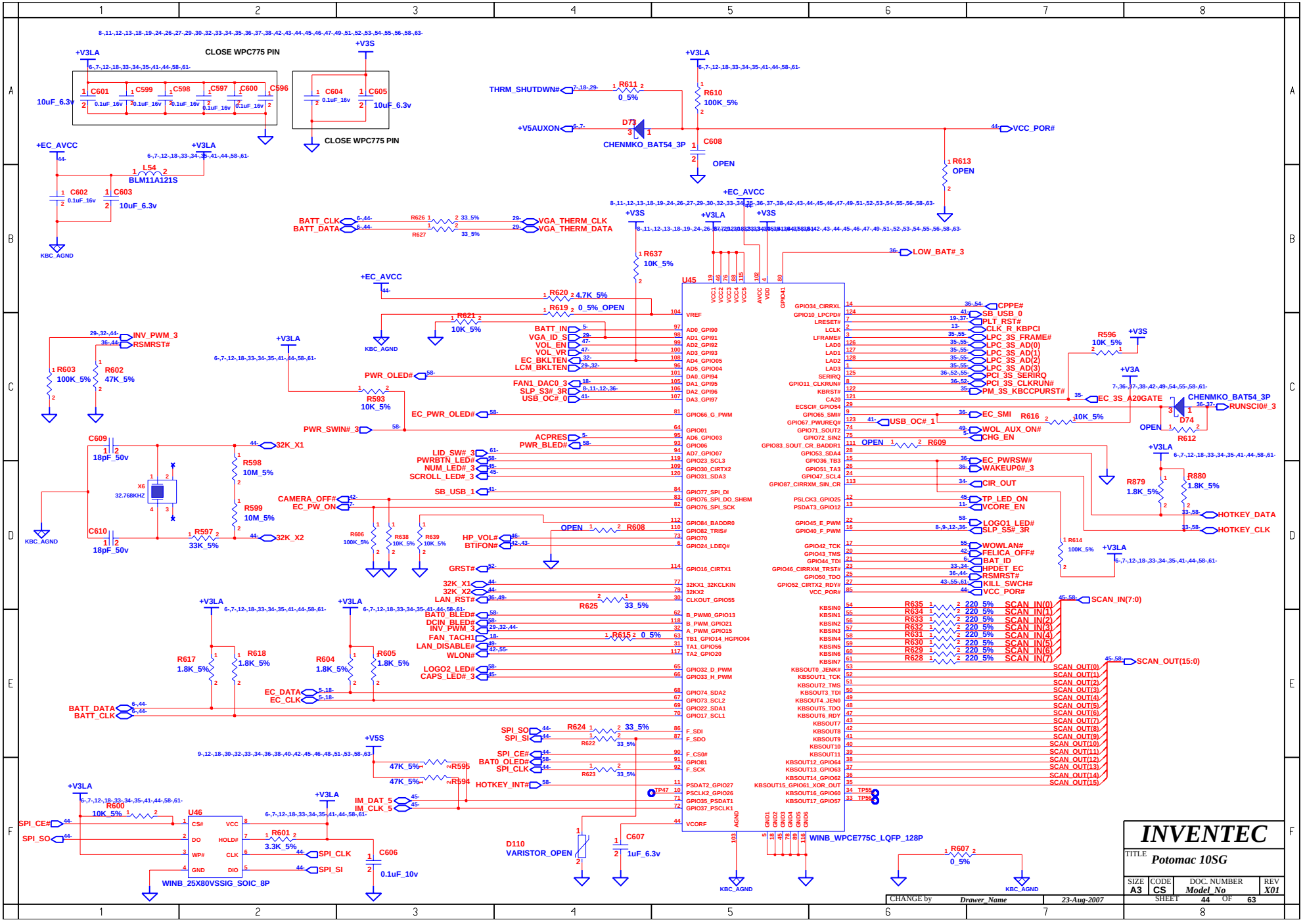
CLOSE WPC775 PIN
+V3LA
+V3S
+V5AUXON
THRM_SHUTDWN#
VCC_POR#
CHENMKO_BAT54_3P
+EC_AVCC
+V5S
+V3A
KBC_AGND
U45
WINB_WPCE775C_LQFP_128P
U46
WINB_25X80VSSIG_SOIC_8P
INVENTEC
Potomac 10SG
Model_No
X01
Drawer_Name
23-Aug-2007
SHEET 44 OF 63

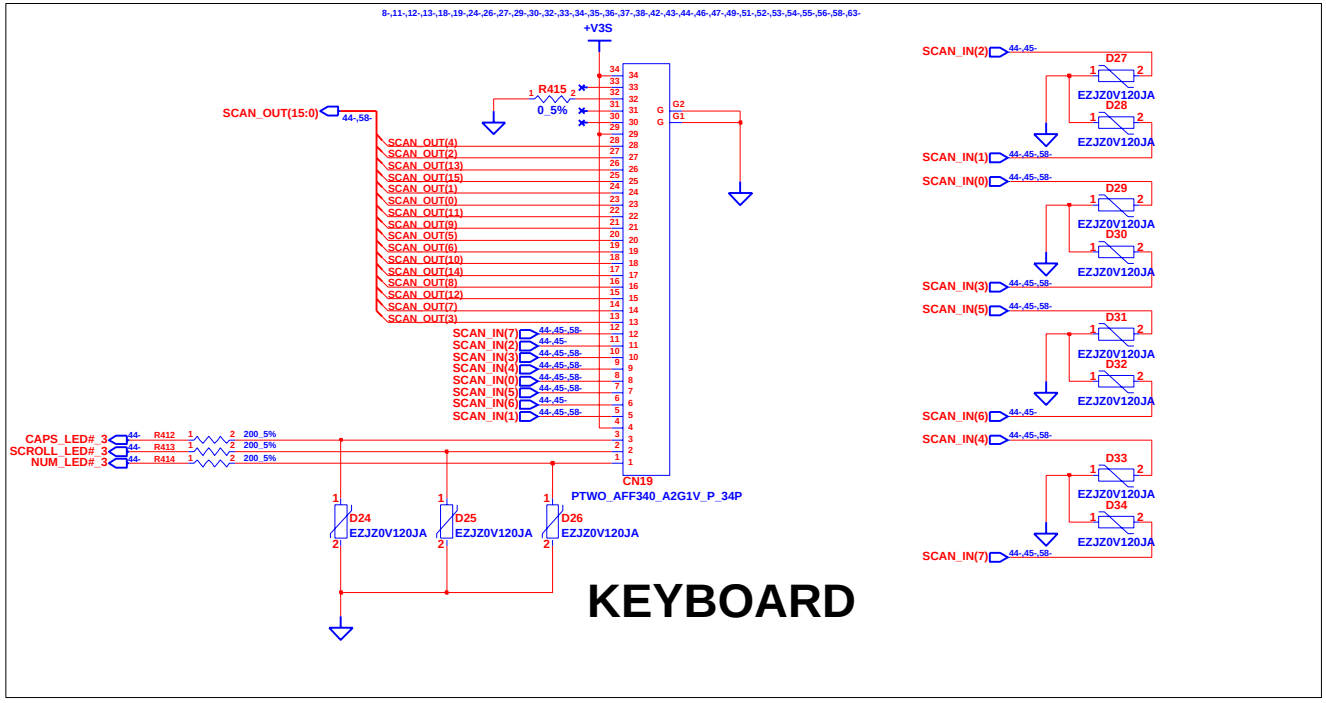

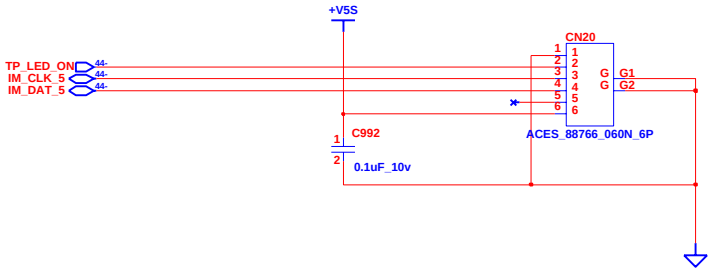

CHANGE by	Drawer_Name	3-Sep-2007	

INVENTEC

TITLE *Potomac 10SG*

SIZE	CODE	DOC. NUMBER	REV
A3	CS	Model_No	X01

SHEET 45 OF 63

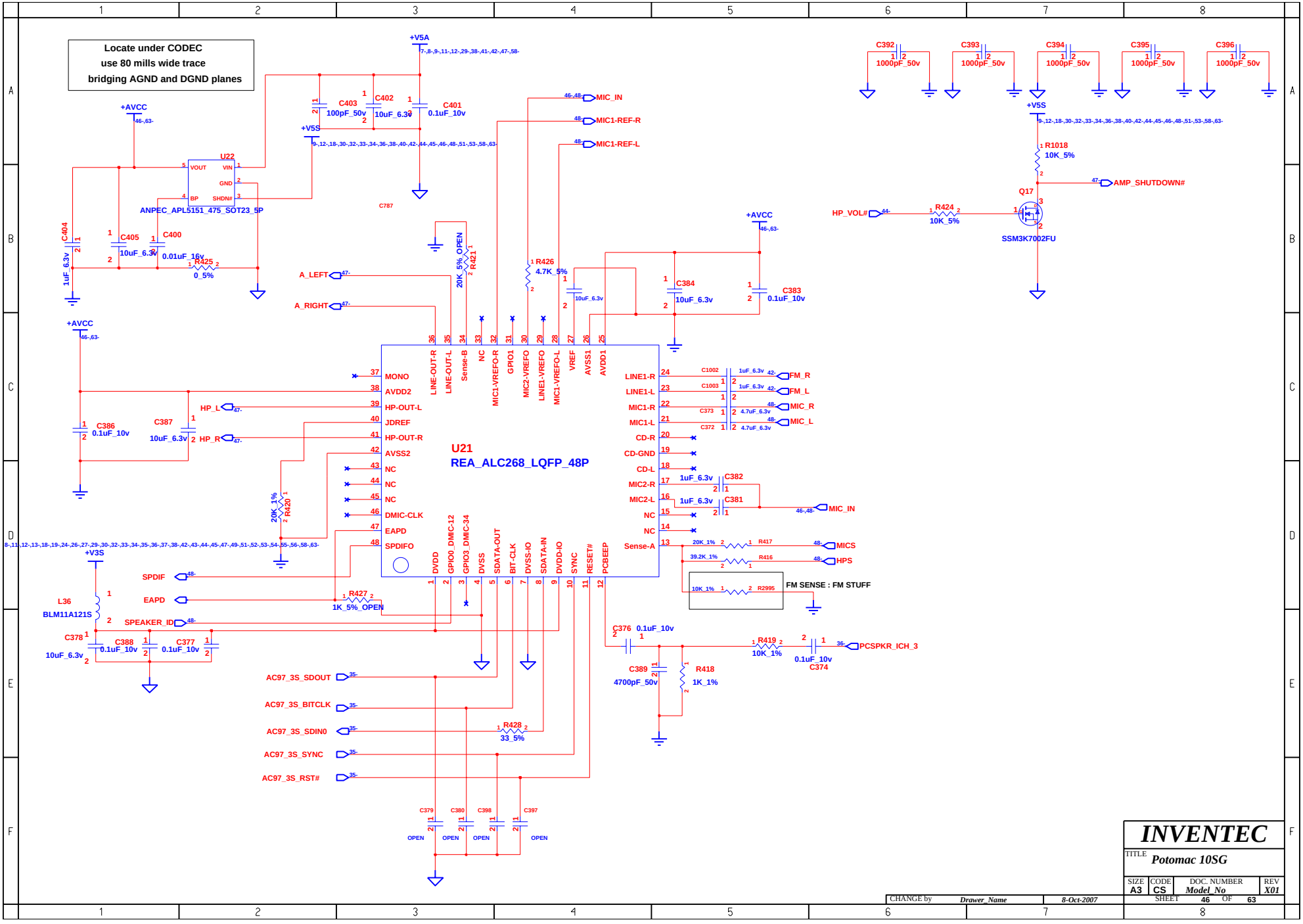
Locate under CODEC
use 80 mills wide trace
bridging AGND and DGND planes
U21
REA_ALC268_LQFP_48P
U22
ANPEC_APL5151_475_SOT23_5P
Q17
SSM3K7002FU
FM SENSE : FM STUFF
INVENTEC
Potomac 10SG
SIZE A3
CODE CS
DOC. NUMBER Model_No
REV X01
SHEET 46 OF 63
CHANGE by Drawer_Name
8-Oct-2007

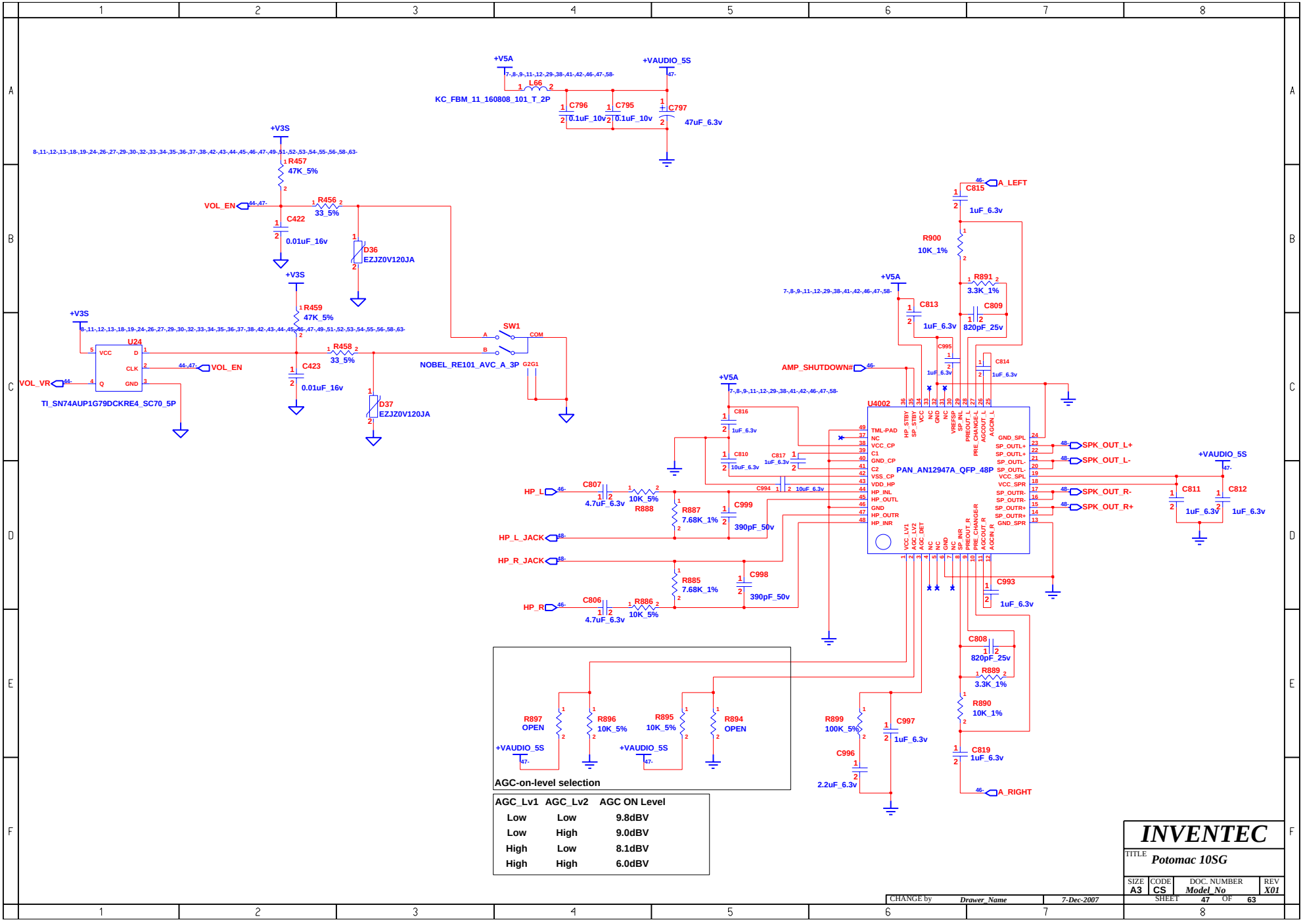
+V5A
+VAUDIO_5S
L66
KC_FBM_11_160808_101_T_2P
C796
0.1uF_10v
C795
0.1uF_10v
C797
47uF_6.3v
+V3S
R457
47K_5%
VOL_EN
R456
33_5%
C422
0.01uF_16v
D36
EZJZ0V120JA
R459
47K_5%
U24
VCC
D
CLK
Q
GND
TI_SN74AUP1G79DCKRE4_SC70_5P
VOL_VR
R458
33_5%
C423
0.01uF_16v
D37
EZJZ0V120JA
SW1
COM
NOBEL_RE101_AVC_A_3P
G2G1
A_LEFT
C815
1uF_6.3v
R900
10K_1%
R891
3.3K_1%
C813
1uF_6.3v
C809
820pF_25v
C995
1uF_6.3v
C814
1uF_6.3v
AMP_SHUTDOWN#
U4002
PAN_AN12947A_QFP_48P
TML-PAD
NC
VCC_CP
C1
GND_CP
C2
VSS_CP
VDD_HP
HP_INL
HP_OUTL
GND
HP_OUTR
HP_INR
HP_STBY
SP_STBY
VCC
VREFSP
SP_IN_L
PREOUT_L
PRE_CHANGE-L
AGCOUT_L
AGCIN_L
GND_SPL
SP_OUTL+
SP_OUTL-
VCC_SPL
VCC_SPR
SP_OUTR-
SP_OUTR+
GND_SPR
SP_IN_R
PREOUT_R
PRE_CHANGE-R
AGCOUT_R
AGCIN_R
VCC_LV1
AGC_LV2
AGC_DET
SPK_OUT_L+
SPK_OUT_L-
SPK_OUT_R-
SPK_OUT_R+
C816
1uF_6.3v
C810
10uF_6.3v
C817
1uF_6.3v
C994
10uF_6.3v
HP_L
C807
4.7uF_6.3v
R888
10K_5%
R887
7.68K_1%
C999
390pF_50v
HP_L_JACK
HP_R_JACK
R885
7.68K_1%
C998
390pF_50v
HP_R
C806
4.7uF_6.3v
R886
10K_5%
C811
1uF_6.3v
C812
1uF_6.3v
C993
1uF_6.3v
C808
820pF_25v
R889
3.3K_1%
R890
10K_1%
C819
1uF_6.3v
A_RIGHT
R897
OPEN
R896
10K_5%
R895
10K_5%
R894
OPEN
R899
100K_5%
C997
1uF_6.3v
C996
2.2uF_6.3v
AGC-on-level selection
AGC_Lv1 AGC_Lv2 AGC ON Level
Low Low 9.8dBV
Low High 9.0dBV
High Low 8.1dBV
High High 6.0dBV
INVENTEC
TITLE Potomac 10SG
SIZE A3
CODE CS
DOC. NUMBER Model_No
REV X01
CHANGE by Drawer_Name
7-Dec-2007
SHEET 47 OF 63

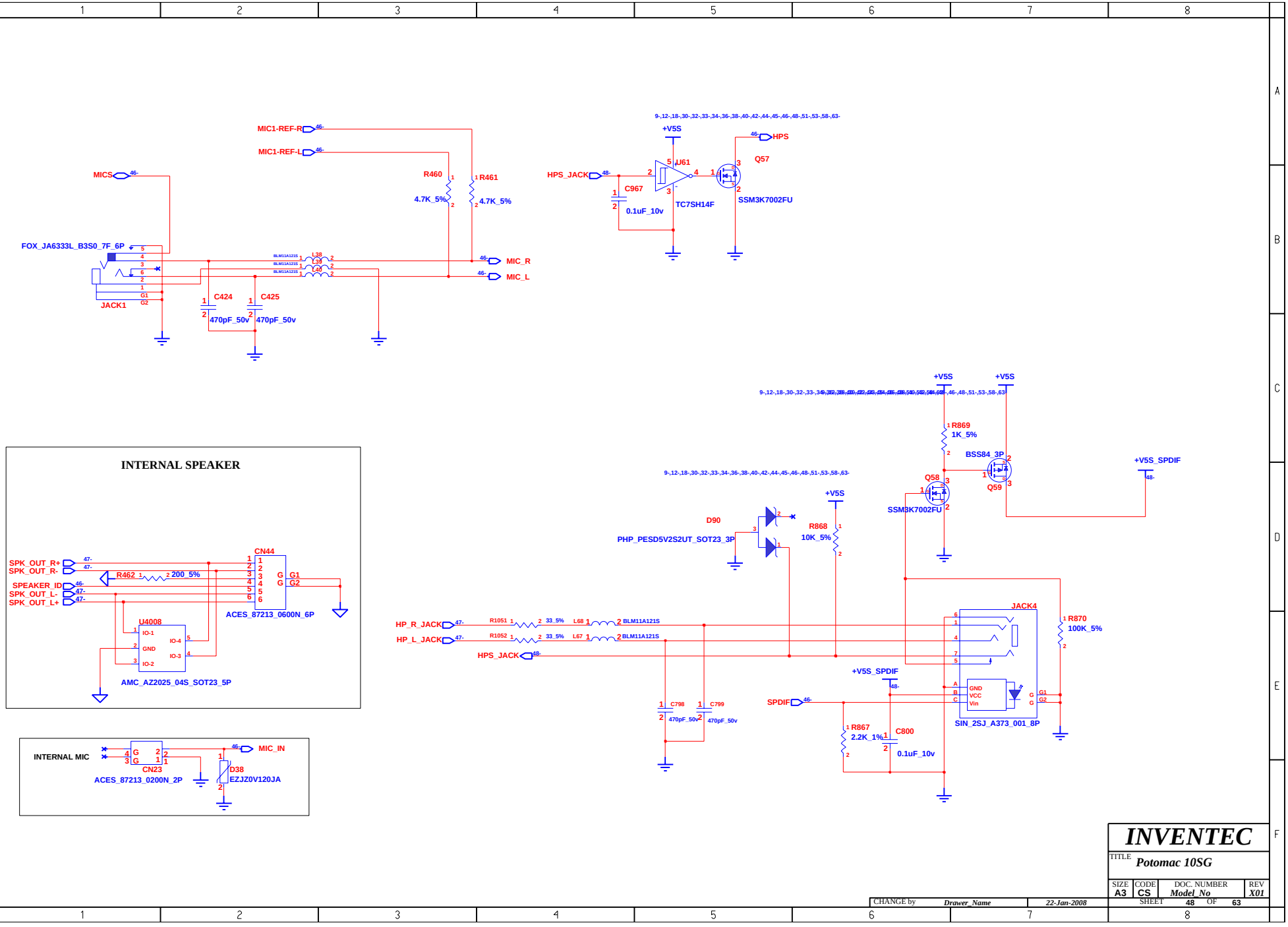

INVENTEC			
TITLE Potomac 10SG			
SIZE A3	CODE CS	DOC. NUMBER Model_No	REV X01
CHANGE by Drawer_Name	22-Jan-2008	SHEET 48 OF 63	

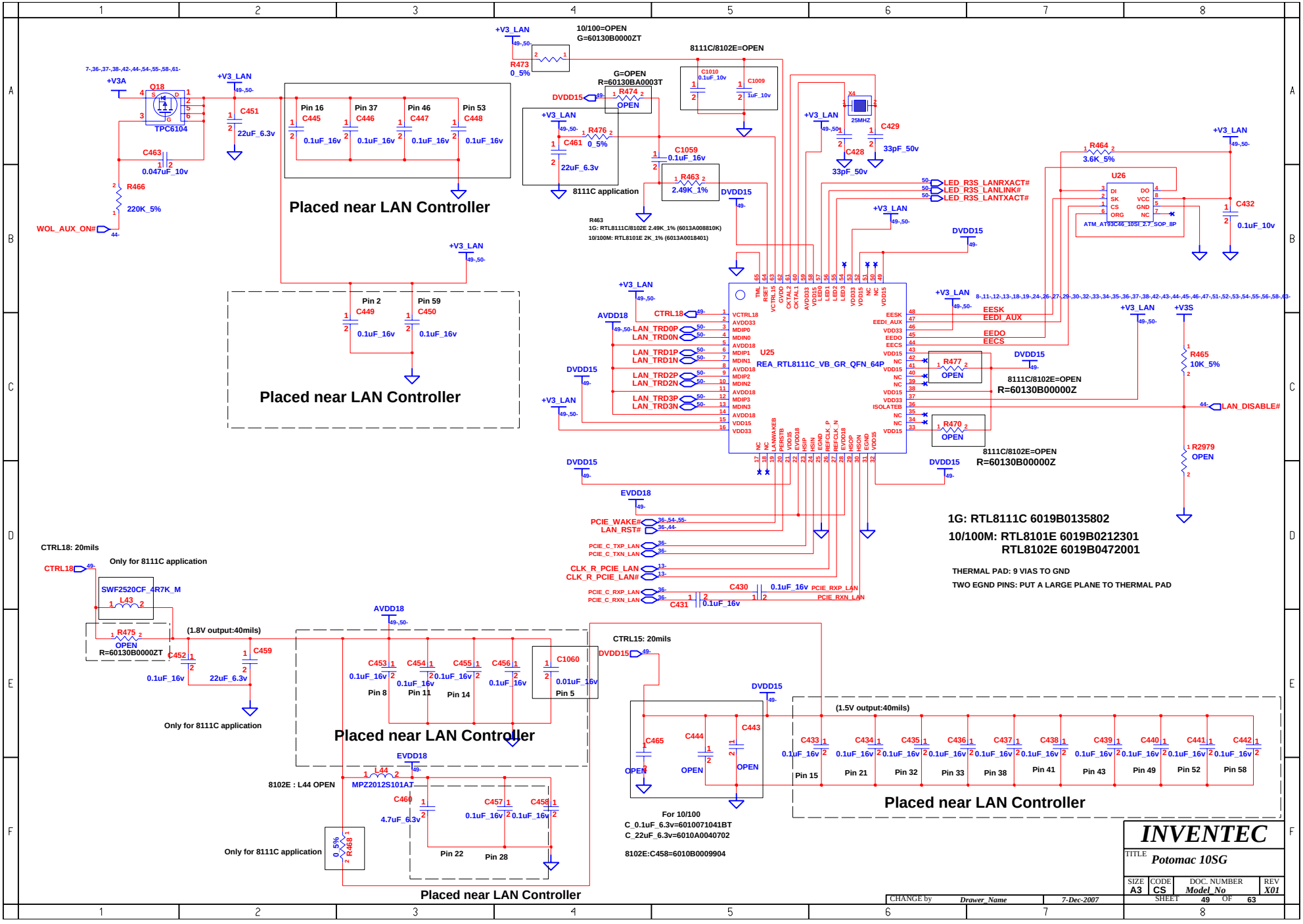
Placed near LAN Controller
Placed near LAN Controller
Placed near LAN Controller
Placed near LAN Controller
Placed near LAN Controller
U25
REA_RTL8111C_VB_GR_QFN_64P
U26
ATM_AT93C46_10SI_2.7_SOP_8P
Q18
TPC6104
X4
25MHZ
10/100=OPEN
G=60130B0000ZT
8111C/8102E=OPEN
G=OPEN
R=60130BA0003T
8111C application
R463
1G: RTL8111C/8102E 2.49K_1% (6013A008810K)
10/100M: RTL8101E 2K_1% (6013A0018401)
8111C/8102E=OPEN
R=60130B00000Z
8111C/8102E=OPEN
R=60130B00000Z
1G: RTL8111C 6019B0135802
10/100M: RTL8101E 6019B0212301
RTL8102E 6019B0472001
THERMAL PAD: 9 VIAS TO GND
TWO EGND PINS: PUT A LARGE PLANE TO THERMAL PAD
CTRL18: 20mils
Only for 8111C application
SWF2520CF_4R7K_M
(1.8V output:40mils)
R475
OPEN
R=60130B0000ZT
Only for 8111C application
CTRL15: 20mils
8102E : L44 OPEN
MPZ2012S101AT
Only for 8111C application
For 10/100
C_0.1uF_6.3v=6010071041BT
C_22uF_6.3v=6010A0040702
8102E:C458=6010B0009904
(1.5V output:40mils)
INVENTEC
TITLE Potomac 10SG
SIZE A3
CODE CS
DOC. NUMBER Model_No
REV X01
CHANGE by Drawer_Name
7-Dec-2007
SHEET 49 OF 63

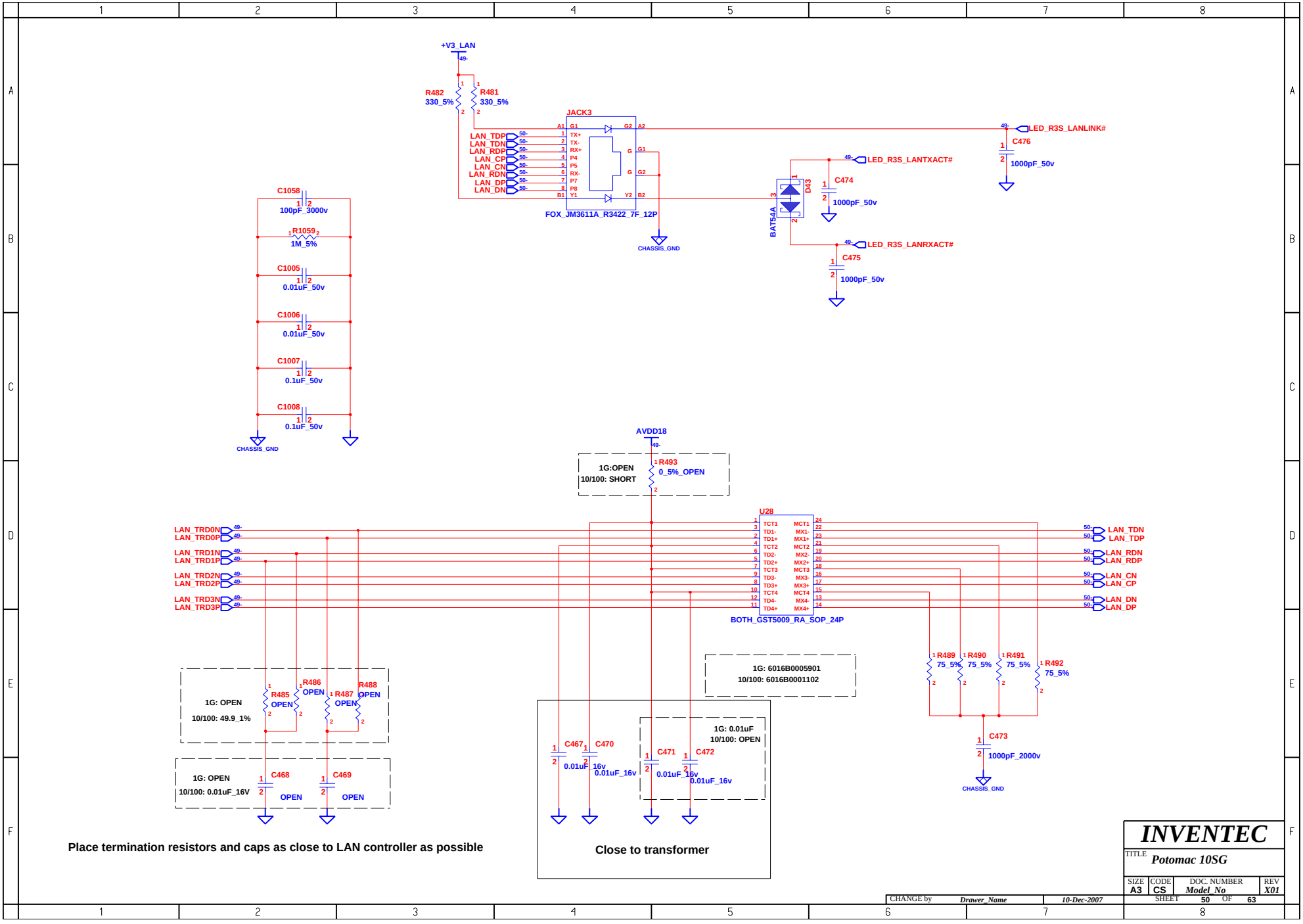
+V3_LAN
R482 330_5%
R481 330_5%
JACK3
LAN_TDP
LAN_TDN
LAN_RDP
LAN_CP
LAN_CN
LAN_RDN
LAN_DP
LAN_DN
FOX_JM3611A_R3422_7F_12P
CHASSIS_GND
LED_R3S_LANLINK#
C476
1000pF_50v
LED_R3S_LANTXACT#
C474
1000pF_50v
D43
BAT54A
LED_R3S_LANRXACT#
C475
1000pF_50v
C1058
100pF_3000v
R1059
1M_5%
C1005
0.01uF_50v
C1006
0.01uF_50v
C1007
0.1uF_50v
C1008
0.1uF_50v
CHASSIS_GND
AVDD18
1G:OPEN
10/100: SHORT
R493
0_5%_OPEN
U28
BOTH_GST5009_RA_SOP_24P
LAN_TRD0N
LAN_TRD0P
LAN_TRD1N
LAN_TRD1P
LAN_TRD2N
LAN_TRD2P
LAN_TRD3N
LAN_TRD3P
LAN_TDN
LAN_TDP
LAN_RDN
LAN_RDP
LAN_CN
LAN_CP
LAN_DN
LAN_DP
1G: OPEN
10/100: 49.9_1%
R485 OPEN
R486 OPEN
R487 OPEN
R488 OPEN
1G: OPEN
10/100: 0.01uF_16V
C468 OPEN
C469 OPEN
1G: 6016B0005901
10/100: 6016B0001102
R489 75_5%
R490 75_5%
R491 75_5%
R492 75_5%
C473
1000pF_2000v
CHASSIS_GND
C467 0.01uF_16v
C470 0.01uF_16v
1G: 0.01uF
10/100: OPEN
C471 0.01uF_16v
C472 0.01uF_16v
Place termination resistors and caps as close to LAN controller as possible
Close to transformer
INVENTEC
TITLE Potomac 10SG
SIZE A3
CODE CS
DOC. NUMBER Model_No
REV X01
SHEET 50 OF 63
CHANGE by Drawer_Name
10-Dec-2007

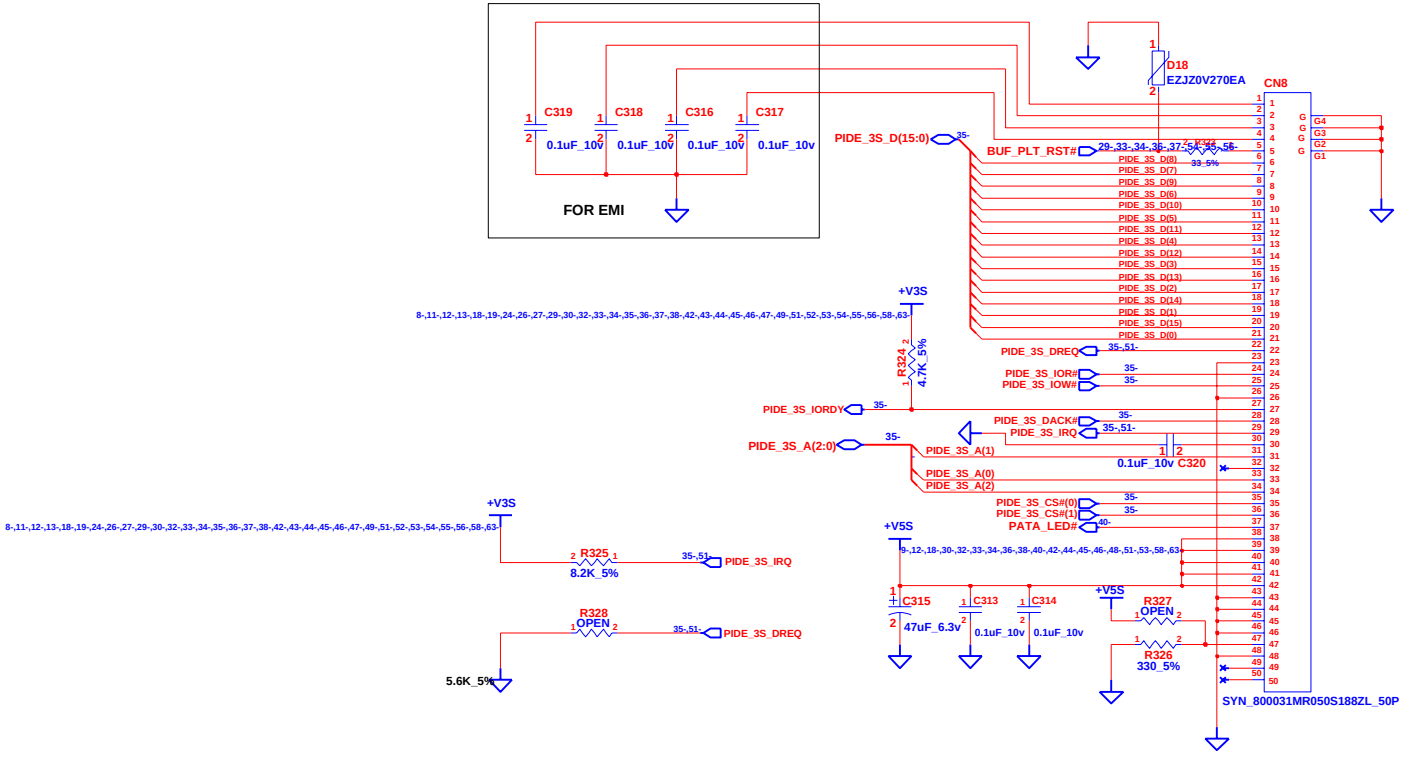

INVENTEC

TITLE *Potomac 10SG*

SIZE	CODE	DOC. NUMBER	REV
A3	CS	*Model_No*	*X01*

SHEET 51 OF 63

CHANGE by *Drawer_Name* *23-Aug-2007*

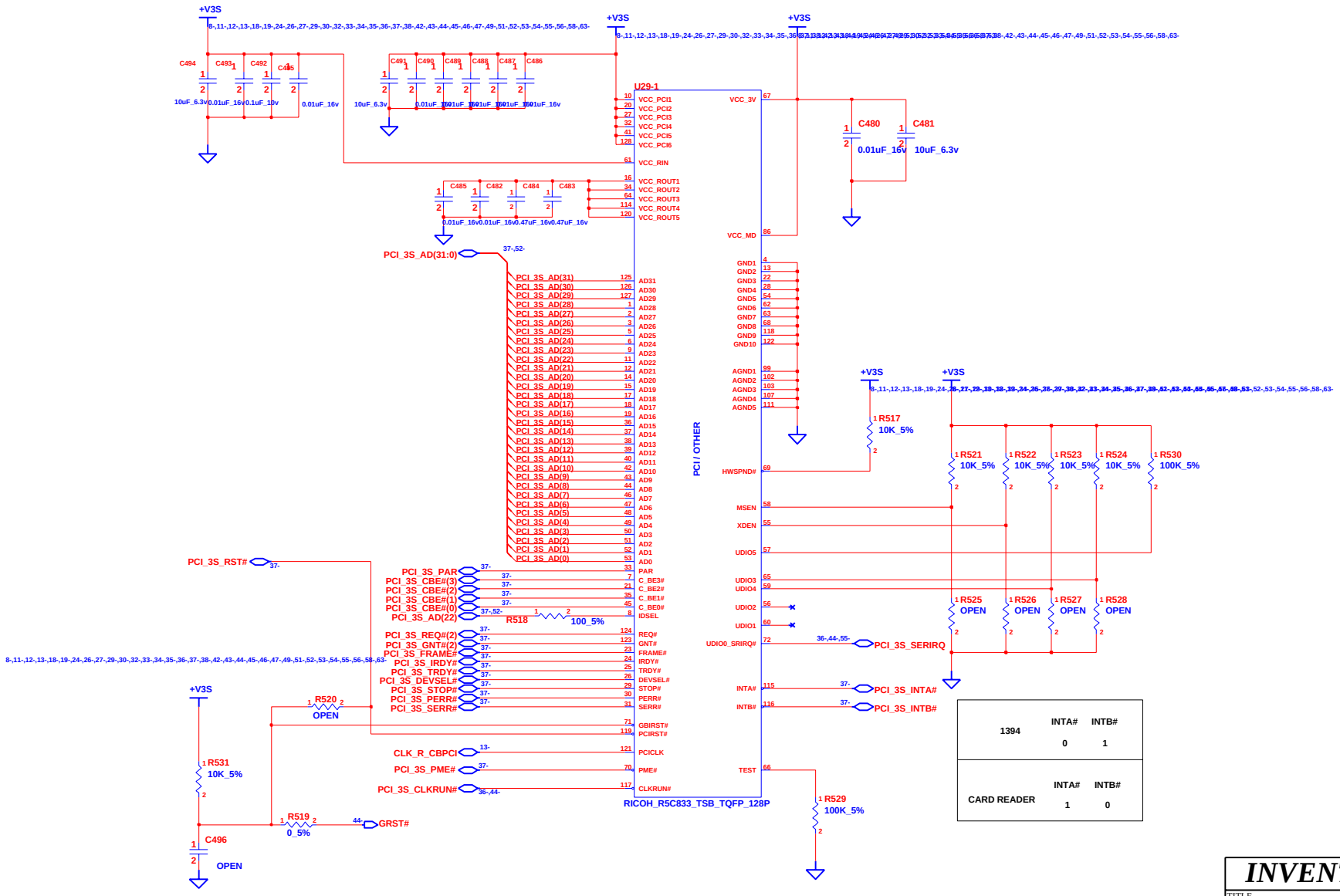
+V3S
U29-1
RICOH_R5C833_TSB_TQFP_128P
PCI / OTHER
PCI_3S_AD(31:0)
PCI_3S_RST#
PCI_3S_PAR
PCI_3S_CBE#(3)
PCI_3S_CBE#(2)
PCI_3S_CBE#(1)
PCI_3S_CBE#(0)
PCI_3S_AD(22)
PCI_3S_REQ#(2)
PCI_3S_GNT#(2)
PCI_3S_FRAME#
PCI_3S_IRDY#
PCI_3S_TRDY#
PCI_3S_DEVSEL#
PCI_3S_STOP#
PCI_3S_PERR#
PCI_3S_SERR#
CLK_R_CBPCI
PCI_3S_PME#
PCI_3S_CLKRUN#
PCI_3S_SERIRQ
PCI_3S_INTA#
PCI_3S_INTB#
GRST#
R518 100_5%
R520 OPEN
R519 0_5%
R531 10K_5%
R529 100K_5%
R517 10K_5%
R521 10K_5%
R522 10K_5%
R523 10K_5%
R524 10K_5%
R530 100K_5%
R525 OPEN
R526 OPEN
R527 OPEN
R528 OPEN
C480 0.01uF_16v
C481 10uF_6.3v
C496 OPEN
1394 INTA# 0 INTB# 1
CARD READER INTA# 1 INTB# 0
INVENTEC
TITLE Potomac 10SG
SIZE A3 CODE CS DOC. NUMBER Model_No REV X01
CHANGE by Drawer_Name 11-Sep-2007
SHEET 52 OF 63

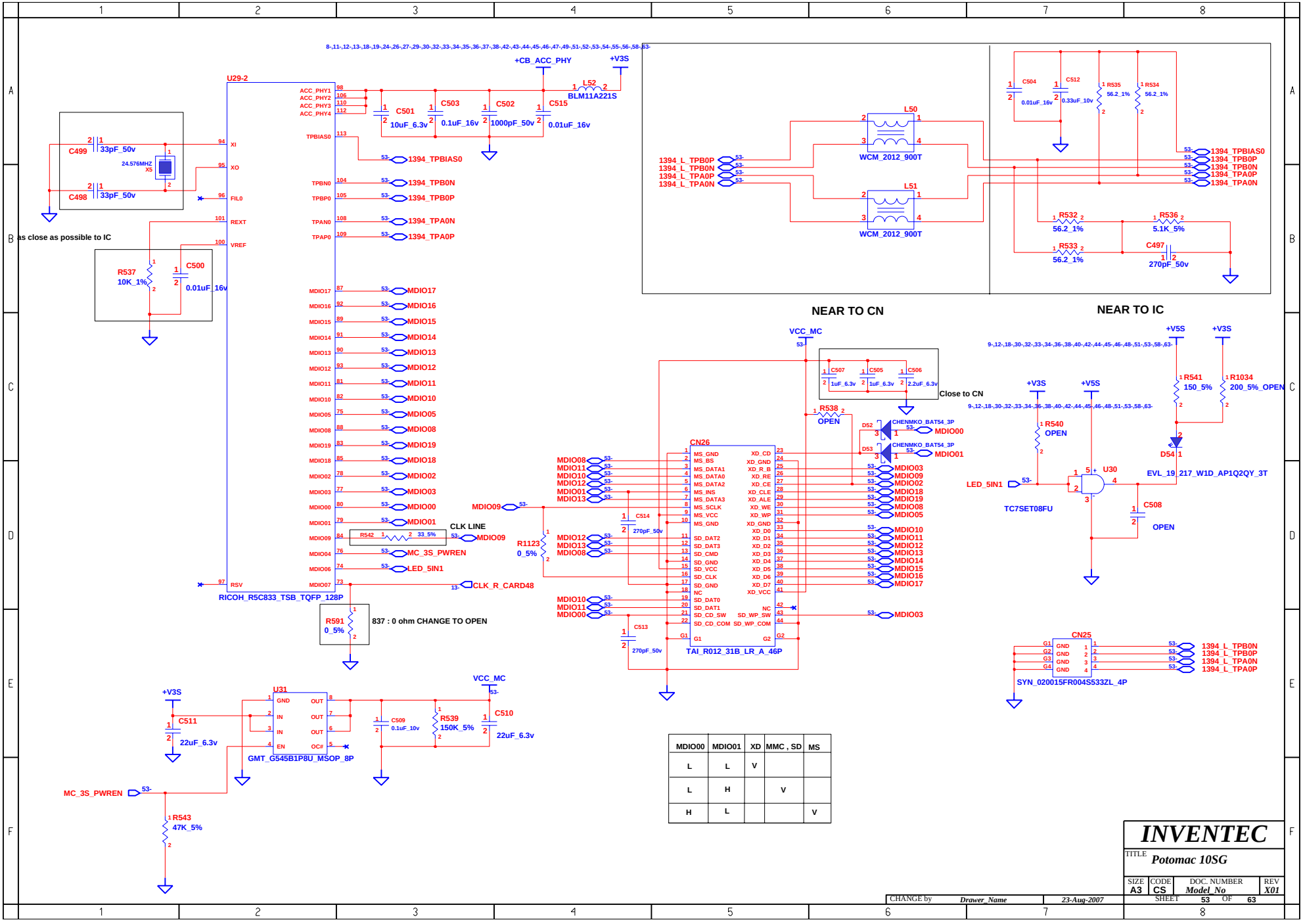

MDIO00	MDIO01	XD	MMC , SD	MS
L	L	V		
L	H		V	
H	L			V

INVENTEC

TITLE Potomac 10SG

SIZE	CODE	DOC. NUMBER	REV
A3	CS	Model_No	X01

SHEET 53 OF 63

CHANGE by Drawer_Name 23-Aug-2007

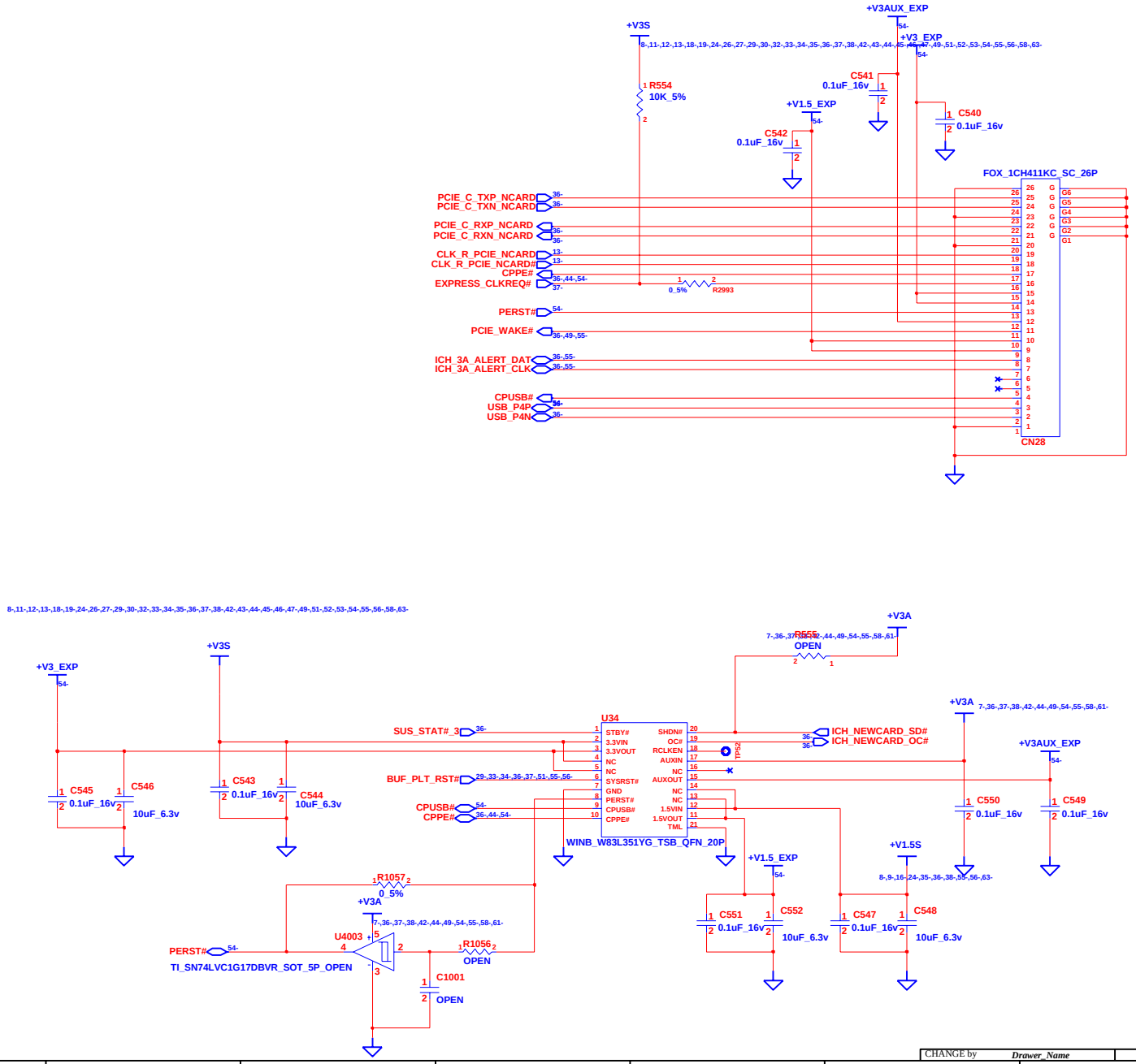

INVENTEC

TITLE **Potomac 10SG**

SIZE	CODE	DOC. NUMBER	REV
A3	CS	Model_No	X01

CHANGE by Drawer_Name 30-Nov-2007

SHEET 54 OF 63

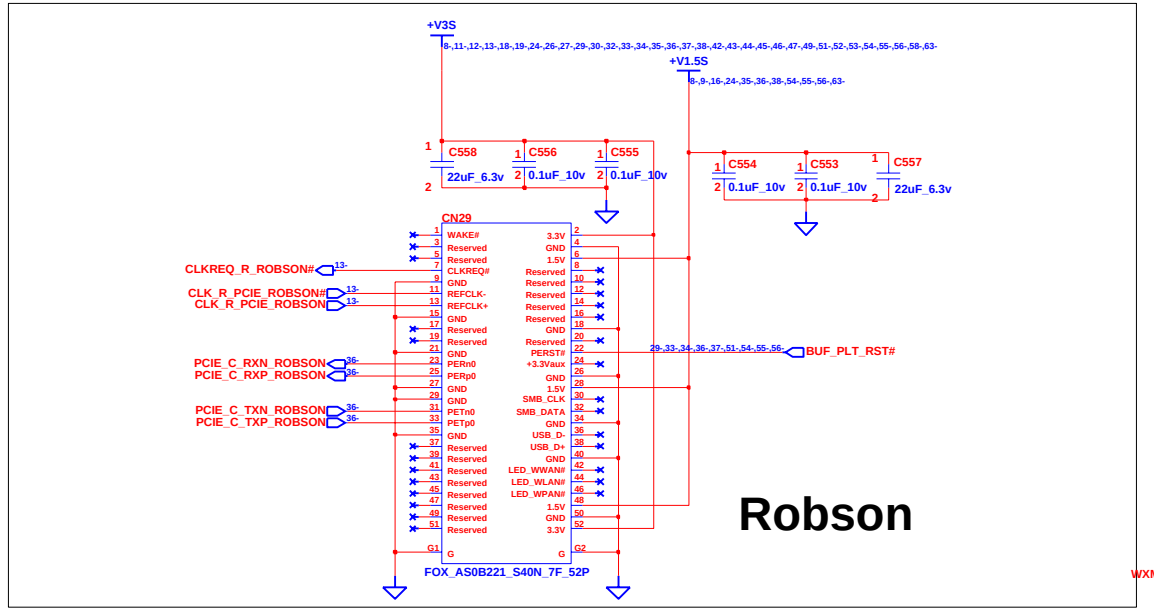

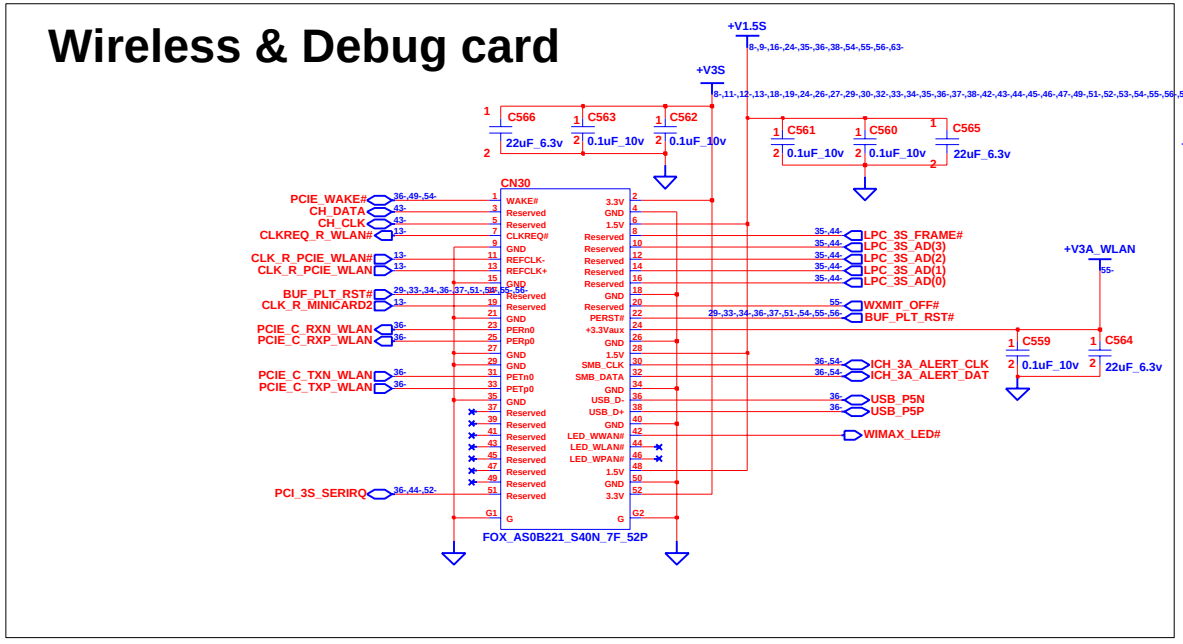

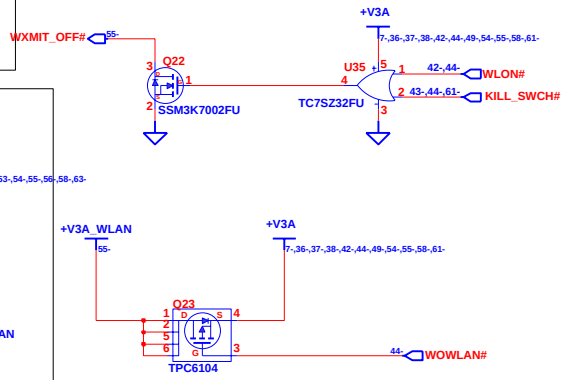

CHANGE by	Drawer_Name	19-Nov-2007	

INVENTEC

TITLE *Potomac 10SG*

SIZE	CODE	DOC. NUMBER	REV
A3	CS	Model_No	X01

SHEET 55 OF 63

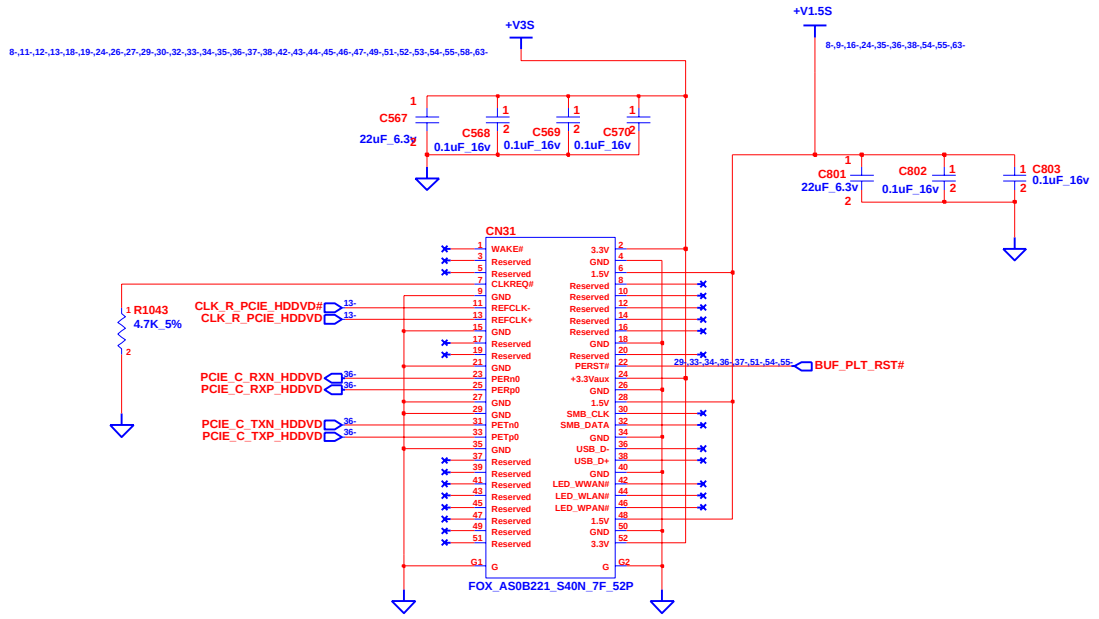

INVENTEC

TITLE **Potomac 10SG**

SIZE	CODE	DOC. NUMBER	REV
A3	CS	Model_No	X01

SHEET 56 OF 63

CHANGE by	Drawer_Name	11-Sep-2007

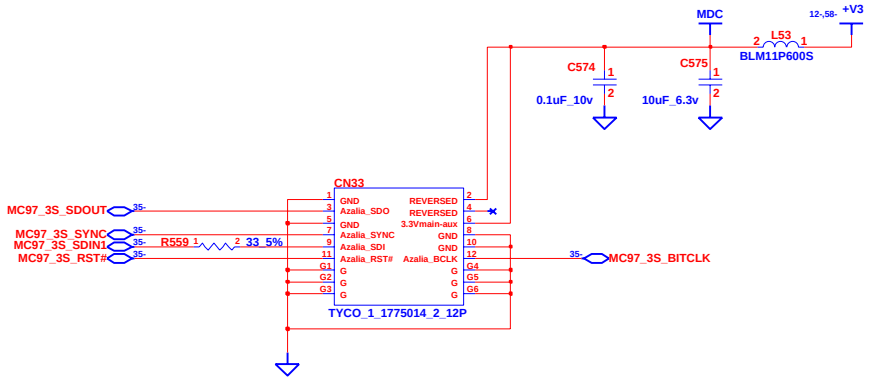

INVENTEC

TITLE Potomac 10SG

SIZE	CODE	DOC. NUMBER	REV
A3	CS	Model_No	X01

CHANGE by Drawer_Name 4-Dec-2007

SHEET 57 OF 63

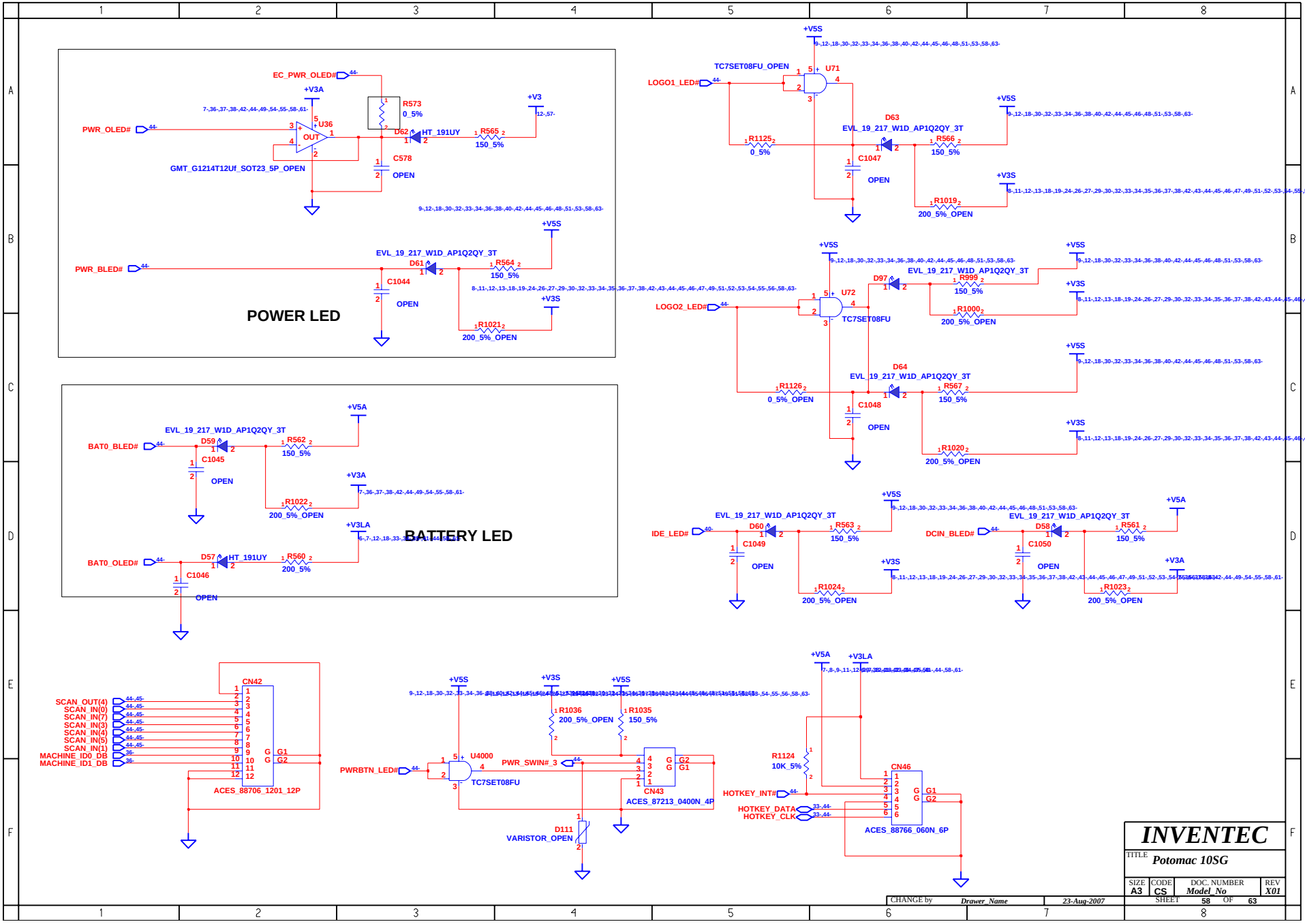
POWER LED
EC_PWR_OLED#
PWR_OLED#
+V3A
U36
OUT
GMT_G1214T12Uf_SOT23_5P_OPEN
R573
0_5%
D62
HT_191UY
R565
150_5%
+V3
C578
OPEN
PWR_BLED#
EVL_19_217_W1D_AP1Q2QY_3T
D61
R564
150_5%
+V5S
C1044
OPEN
+V3S
R1021
200_5%_OPEN
BATTERY LED
BAT0_BLED#
D59
R562
150_5%
+V5A
C1045
OPEN
+V3A
R1022
200_5%_OPEN
+V3LA
BAT0_OLED#
D57
HT_191UY
R560
200_5%
C1046
OPEN
LOGO1_LED#
TC7SET08FU_OPEN
U71
R1125
0_5%
D63
EVL_19_217_W1D_AP1Q2QY_3T
R566
150_5%
C1047
OPEN
R1019
200_5%_OPEN
LOGO2_LED#
U72
TC7SET08FU
D97
R999
150_5%
R1000
200_5%_OPEN
D64
R1126
0_5%_OPEN
R567
150_5%
C1048
OPEN
R1020
200_5%_OPEN
IDE_LED#
D60
R563
150_5%
C1049
OPEN
R1024
200_5%_OPEN
DCIN_BLED#
D58
R561
150_5%
C1050
OPEN
R1023
200_5%_OPEN
CN42
SCAN_OUT(4)
SCAN_IN(0)
SCAN_IN(7)
SCAN_IN(3)
SCAN_IN(4)
SCAN_IN(5)
SCAN_IN(1)
MACHINE_ID0_DB
MACHINE_ID1_DB
ACES_88706_1201_12P
PWRBTN_LED#
U4000
TC7SET08FU
PWR_SWIN#_3
R1036
200_5%_OPEN
R1035
150_5%
CN43
ACES_87213_0400N_4P
D111
VARISTOR_OPEN
R1124
10K_5%
HOTKEY_INT#
HOTKEY_DATA
HOTKEY_CLK
CN46
ACES_88766_060N_6P
INVENTEC
TITLE Potomac 10SG
SIZE A3
CODE CS
DOC. NUMBER Model_No
REV X01
CHANGE by Drawer_Name
23-Aug-2007
SHEET 58 OF 63

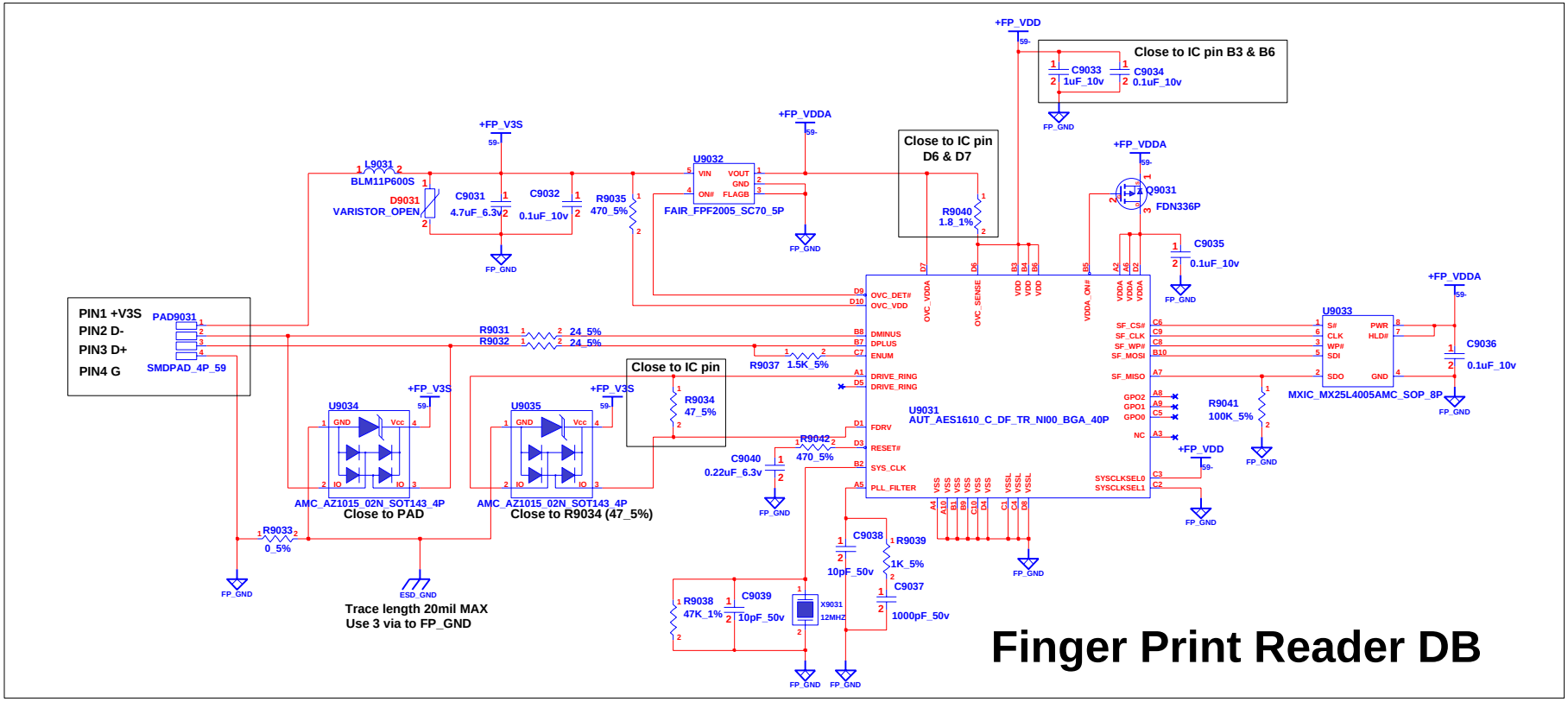

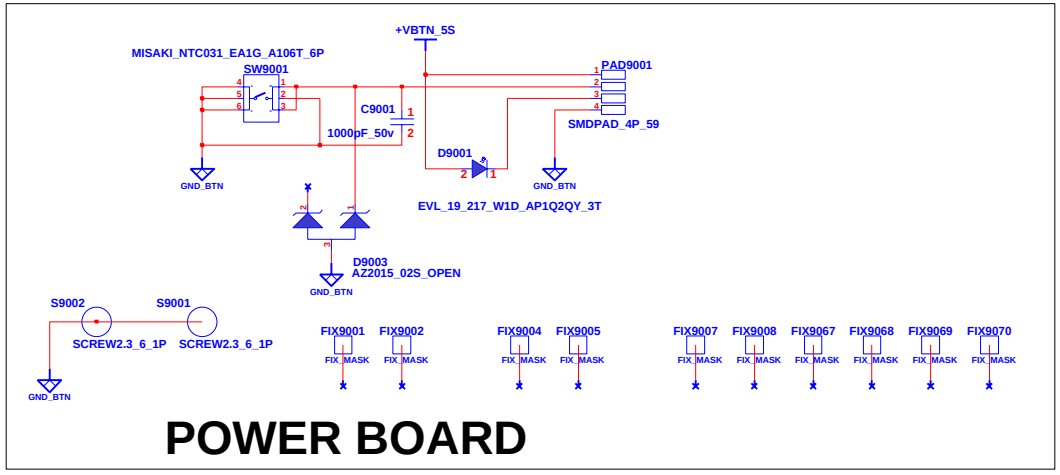

CHANGE by	Drawer_Name	23-Jan-2008	

INVENTEC

TITLE *Potomac 10SG*

SIZE	CODE	DOC. NUMBER	REV
A3	CS	Model_No	X01

SHEET 59 OF 63

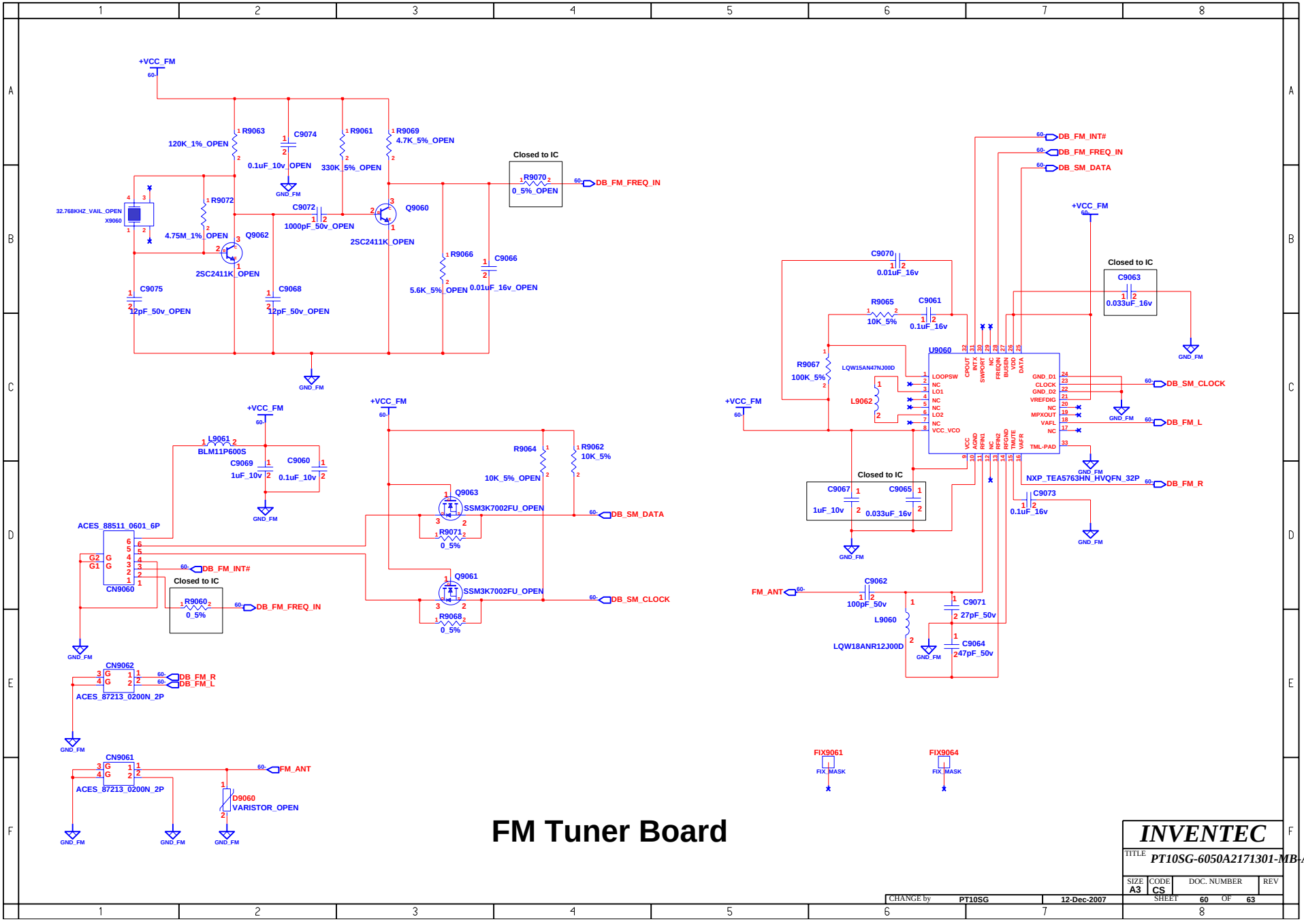

FM Tuner Board

INVENTEC

TITLE PT10SG-6050A2171301-MB-AX1-IES-20071030

SIZE	CODE	DOC. NUMBER	REV
A3	CS		

SHEET 60 OF 63

CHANGE by PT10SG 12-Dec-2007

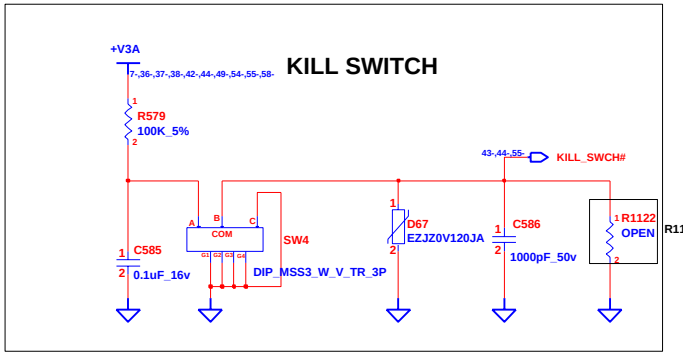

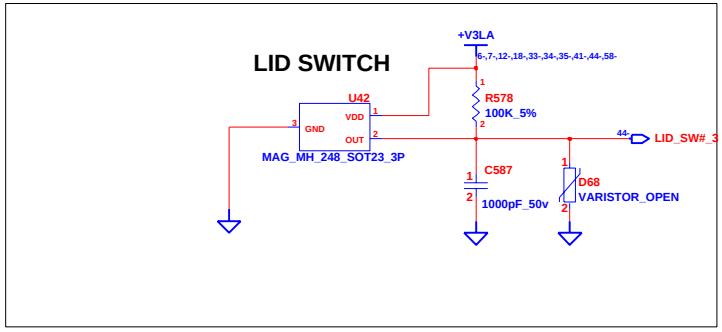

INVENTEC			
TITLE Potomac 10SG			
SIZE A3	CODE CS	DOC. NUMBER Model_No	REV X01
CHANGE by Drawer_Name	23-Aug-2007	SHEET 61 OF 63	

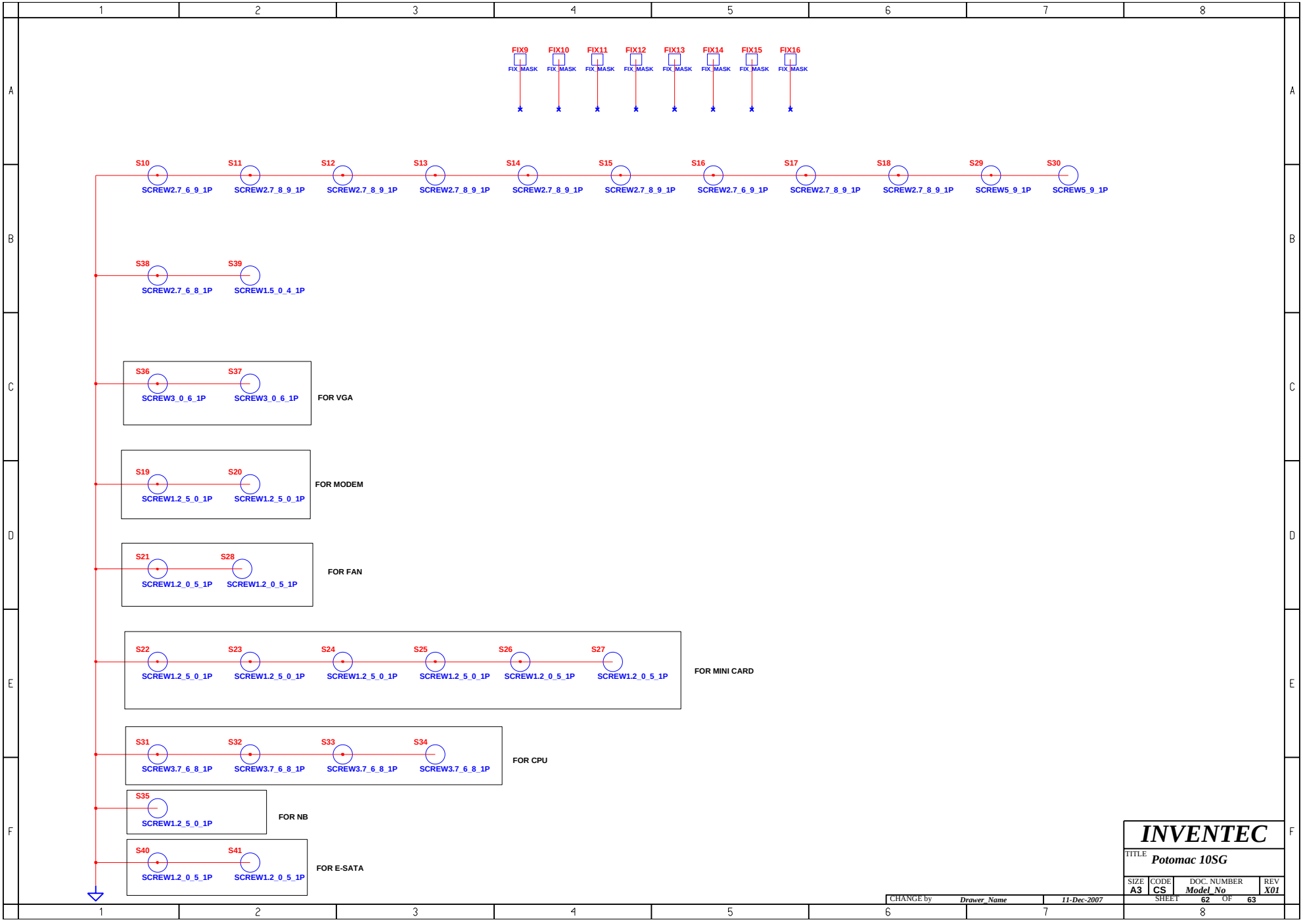
FIX9 FIX_MASK
FIX10 FIX_MASK
FIX11 FIX_MASK
FIX12 FIX_MASK
FIX13 FIX_MASK
FIX14 FIX_MASK
FIX15 FIX_MASK
FIX16 FIX_MASK
S10 SCREW2.7_6_9_1P
S11 SCREW2.7_8_9_1P
S12 SCREW2.7_8_9_1P
S13 SCREW2.7_8_9_1P
S14 SCREW2.7_8_9_1P
S15 SCREW2.7_8_9_1P
S16 SCREW2.7_6_9_1P
S17 SCREW2.7_8_9_1P
S18 SCREW2.7_8_9_1P
S29 SCREW5_9_1P
S30 SCREW5_9_1P
S38 SCREW2.7_6_8_1P
S39 SCREW1.5_0_4_1P
S36 SCREW3_0_6_1P
S37 SCREW3_0_6_1P
FOR VGA
S19 SCREW1.2_5_0_1P
S20 SCREW1.2_5_0_1P
FOR MODEM
S21 SCREW1.2_0_5_1P
S28 SCREW1.2_0_5_1P
FOR FAN
S22 SCREW1.2_5_0_1P
S23 SCREW1.2_5_0_1P
S24 SCREW1.2_5_0_1P
S25 SCREW1.2_5_0_1P
S26 SCREW1.2_0_5_1P
S27 SCREW1.2_0_5_1P
FOR MINI CARD
S31 SCREW3.7_6_8_1P
S32 SCREW3.7_6_8_1P
S33 SCREW3.7_6_8_1P
S34 SCREW3.7_6_8_1P
FOR CPU
S35 SCREW1.2_5_0_1P
FOR NB
S40 SCREW1.2_0_5_1P
S41 SCREW1.2_0_5_1P
FOR E-SATA
INVENTEC
TITLE Potomac 10SG
SIZE A3
CODE CS
DOC. NUMBER Model_No
REV X01
CHANGE by Drawer_Name
11-Dec-2007
SHEET 62 OF 63

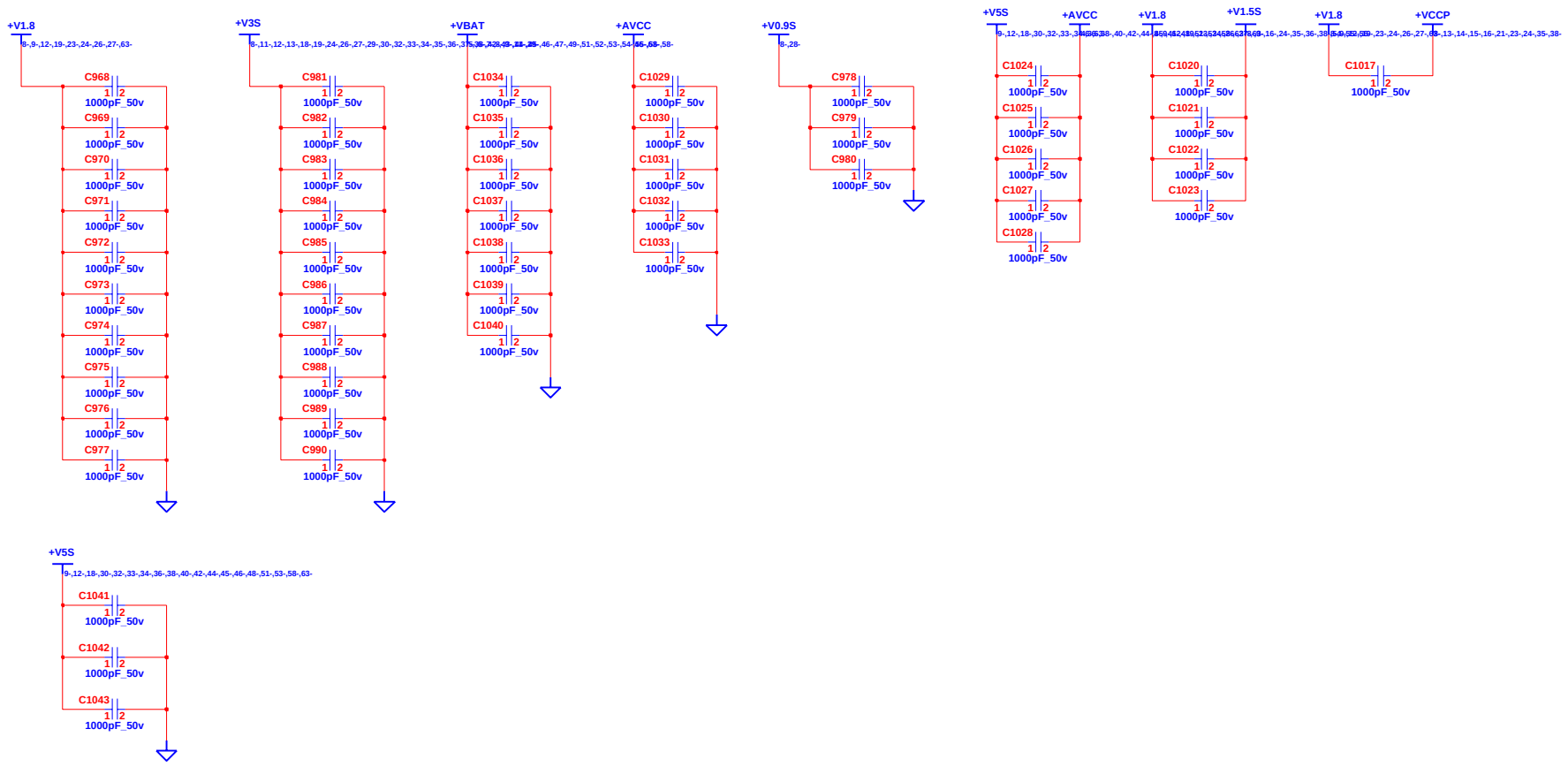

INVENTEC			
TITLE Potomac 10SG			
SIZE A3	CODE CS	DOC. NUMBER Model_No	REV X01
CHANGE by Drawer_Name	13-Sep-2007	SHEET 63 OF 63	