THIS DRAWING AND SPECIFICATIONS, HEREIN, ARE THE PROPERTY OF INVENTEC CORPORATION AND SHALL NOT BE REPODUCED, COPIED, OR USED IN WHOLE OR IN PART AS THE BASIS FOR THE MANUFACTURE OR SALE OF ITEMS WITHOUT WRITTEN PERMISSION, INVENTEC CORPORATION 2009 ALL RIGHT RESERVED

HSF Property : HF

ROCKY2

Huron River Platform

MV Build

2010/03/16

DATE	CHANGE NO.	REV
2010-11-04	2010-ECO-022114	B

	EE	DATE	POWER	DATE
DRAWER	Chou, Leo	2010-06-14	Chen, Iray	2010-06-14
DESIGN	Chen, Michael	2010-06-14		
CHECK	Wu, Bruce	2010-06-14		
RESPONSIBLE		2010-06-14		

SIZE = 3 VER :

FILE NAME : XXXX-XXXXXX-XX

P/N XXXXXXXXXXXX

INVENTEC

TITLE RKY15HR

Project Name

SIZE	CODE	DOC. NUMBER	REV
A3	CS	1310A24121-0-MTR	A01

SHEET 1 OF 58

Index

PAGE
01. PROJECT NAME
02. INDEX
03. Block Diagram
04. POWER Procedure
05. DC & CHARGE Circuit
06. Battery CONN
07. +V3A & +V5A
08. +V1.5 & +V0.75
09. +V1.8S & +VCCSA
10. +VCC_CORE
11. +VGFX_CORE
12. VTT & +V1.05S
13. +V5S & +V3S
14. RTC BATTERY
15. CPU-1
16. CPU-2
17. CPU-3
18. CPU-4
19. CPU-5
20. CPU-6
21. Thermal, Fan & XDP
22. DDR3-1
23. DDR3-2
24. PCH-1
25. PCH-2
26. PCH-3
27. PCH-4
28. PCH-5
29. PCH-6
30. PCH-7

PAGE
31. PCH-8
32. PCH-9
33. KBC
34. Keyboard & TouchPad
35. CRT CONN
36. LCM CONN
37. HDMI CONN
38. SATA HDD & ODD
39. LAN
40. RJ-45
41. Card Reader
42. Audio Codec
43. HP JACK & MIC JACK
44. SCREW&USB&PNN CONN
45. WLAN & BlueTooth
46. USB CONN(MB)
47. USB&POWER Button (DB)
48. HDD CONN
49. Seymour-S3 PCIE INTERFACE
50. Seymour-S3 Display and GIPO INTERFACE
51. Seymour-S3 CLK and DDC INTERFACE
52. Seymour-S3 POWER INTERFACE
53. Seymour-S3 DP Power and LVDS INTERFACE
54. Seymour-S3 Memory INTERFACE
55. VRAM-1(DDR3)
56. VRAM-2(DDR3)
57. VPCIE&VDDC_GPU

Inventec Confidential

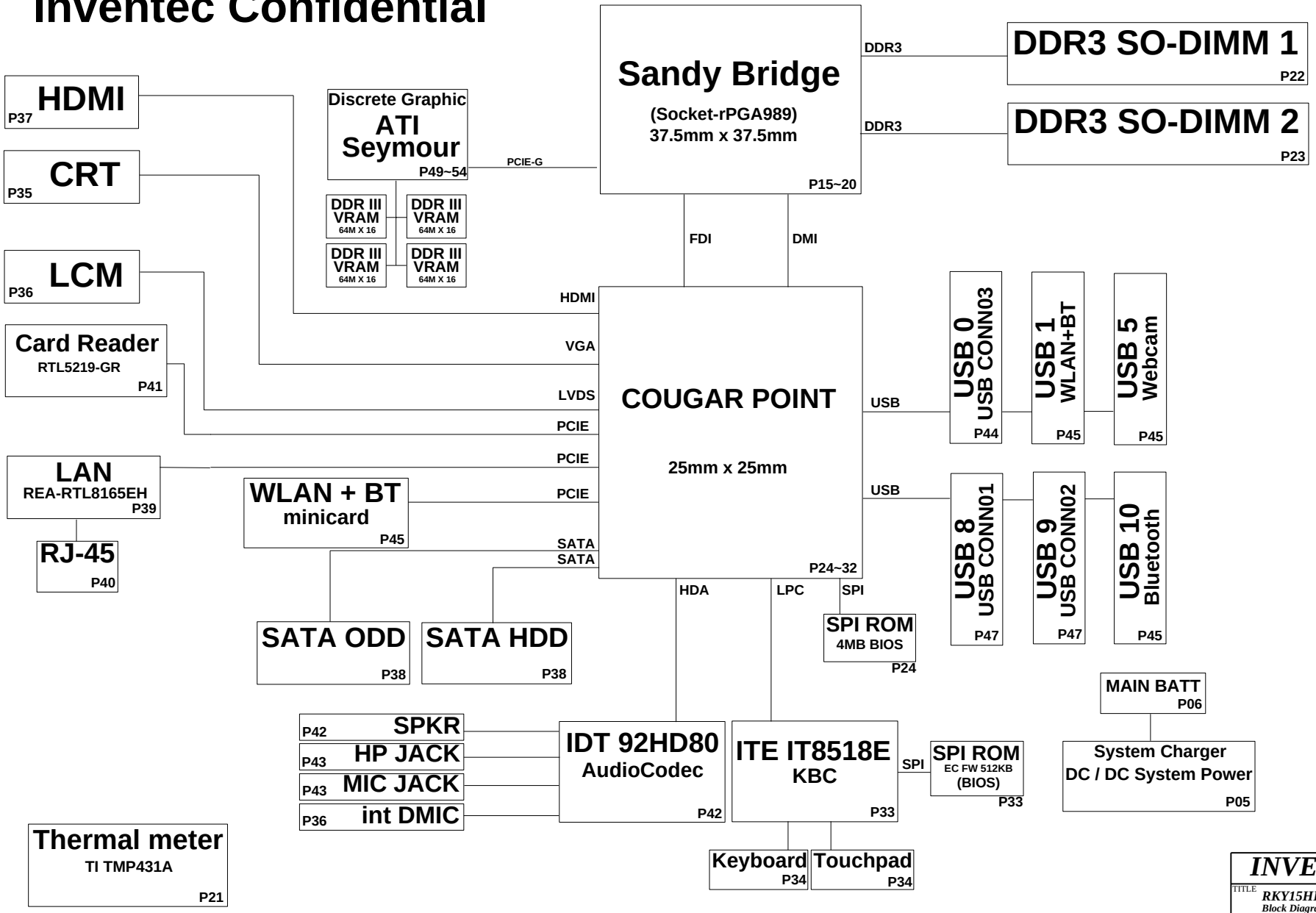

INVENTEC			
TITLE: RKY15HR Block Diagram			
SIZE: A3	CODE: CS	DOC. NUMBER: 1310A24121-0-MTR	REV: A01
CHANGE by: Chou, Leo	1-Dec-2010	SHEET 3 OF 58	

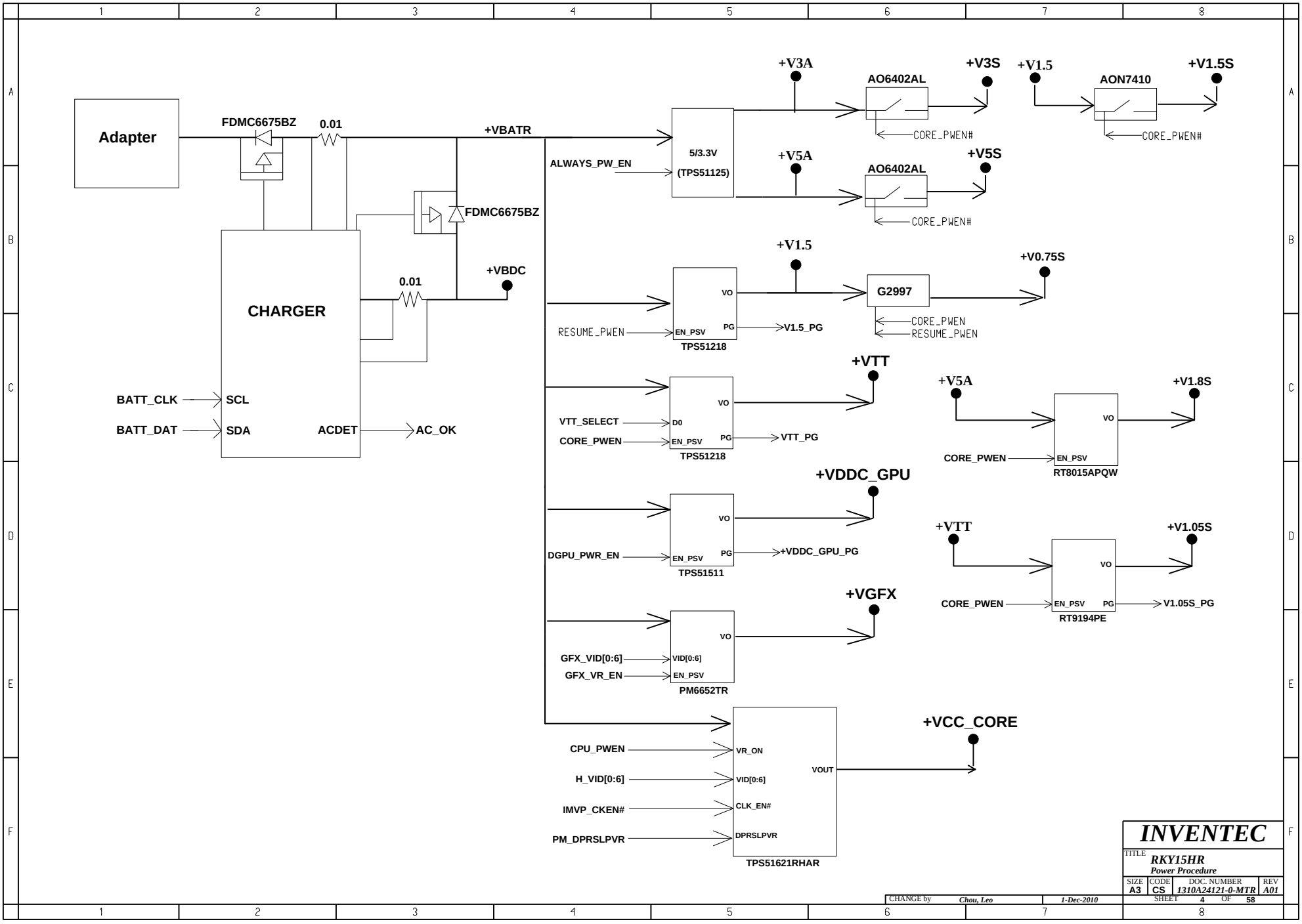

INVENTEC			
TITLE: RKY15HR Power Procedure			
SIZE: A3	CODE: CS	DOC. NUMBER: 1310A24121-0-MTR	REV: A01
CHANGE by: Chou, Leo	1-Dec-2010	SHEET 4 OF 58	

AC IN

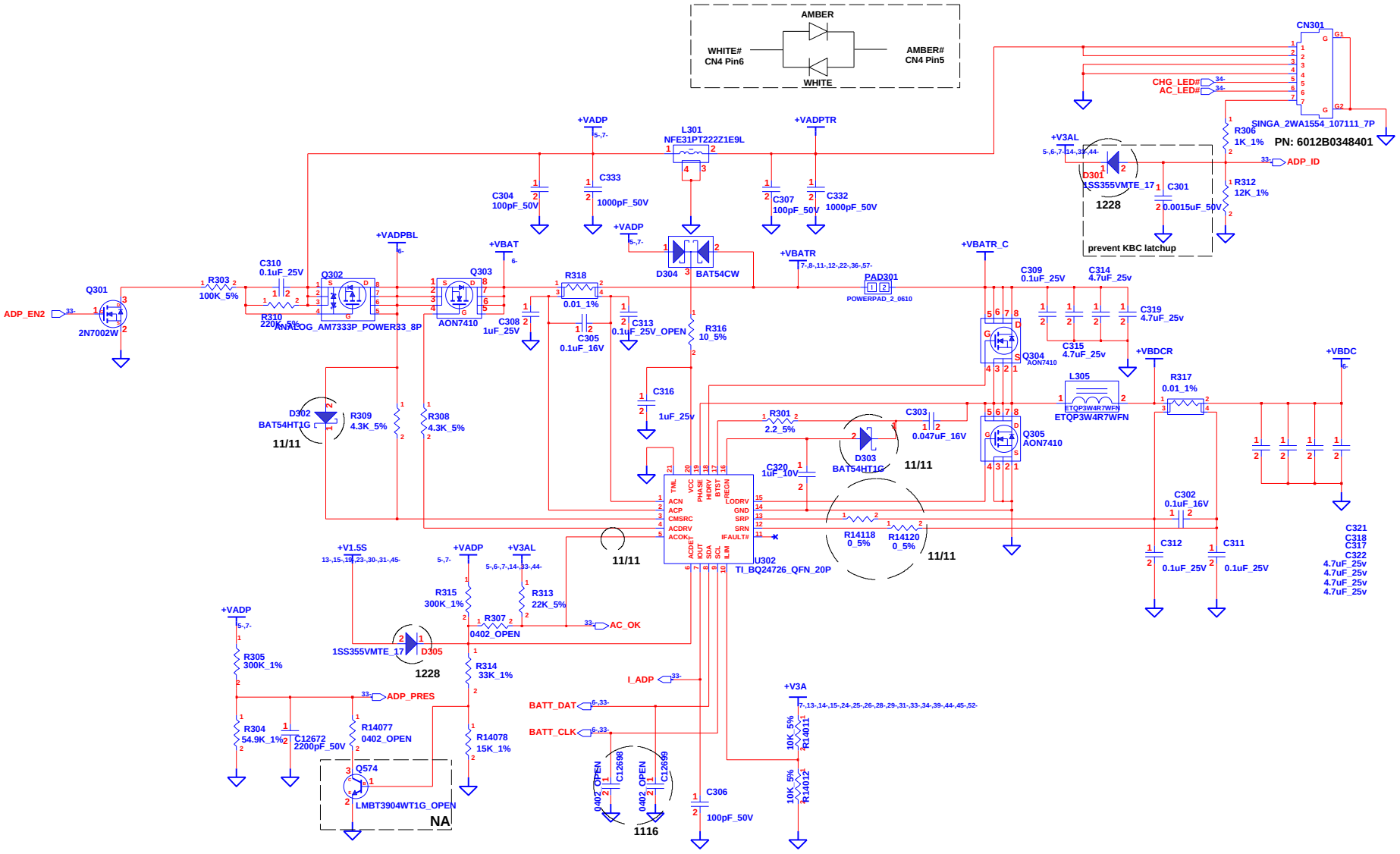

INVENTEC			
TITLE: RKY15HR DC & Battery Charger			
SIZE: A3	CODE: CS	DOC. NUMBER: 1310A24121-0-MTR	REV: A01
CHANGE by: Chou, Leo	1-Dec-2010	SHEET 5 OF 58	

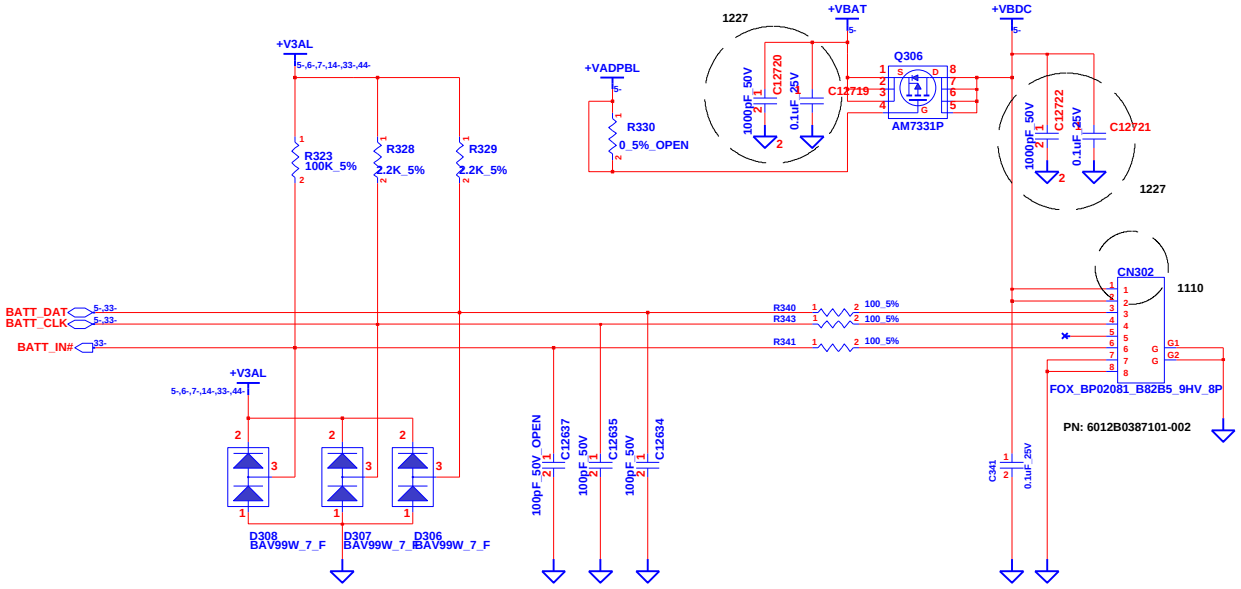

INVENTEC

TITLE
RKY15HR
Battery CONN

SIZE	CODE	DOC. NUMBER	REV
A3	CS	1310A24121-0-MTR	A01

SHEET 6 OF 58

CHANGE by		
Chou, Leo	1-Dec-2010	

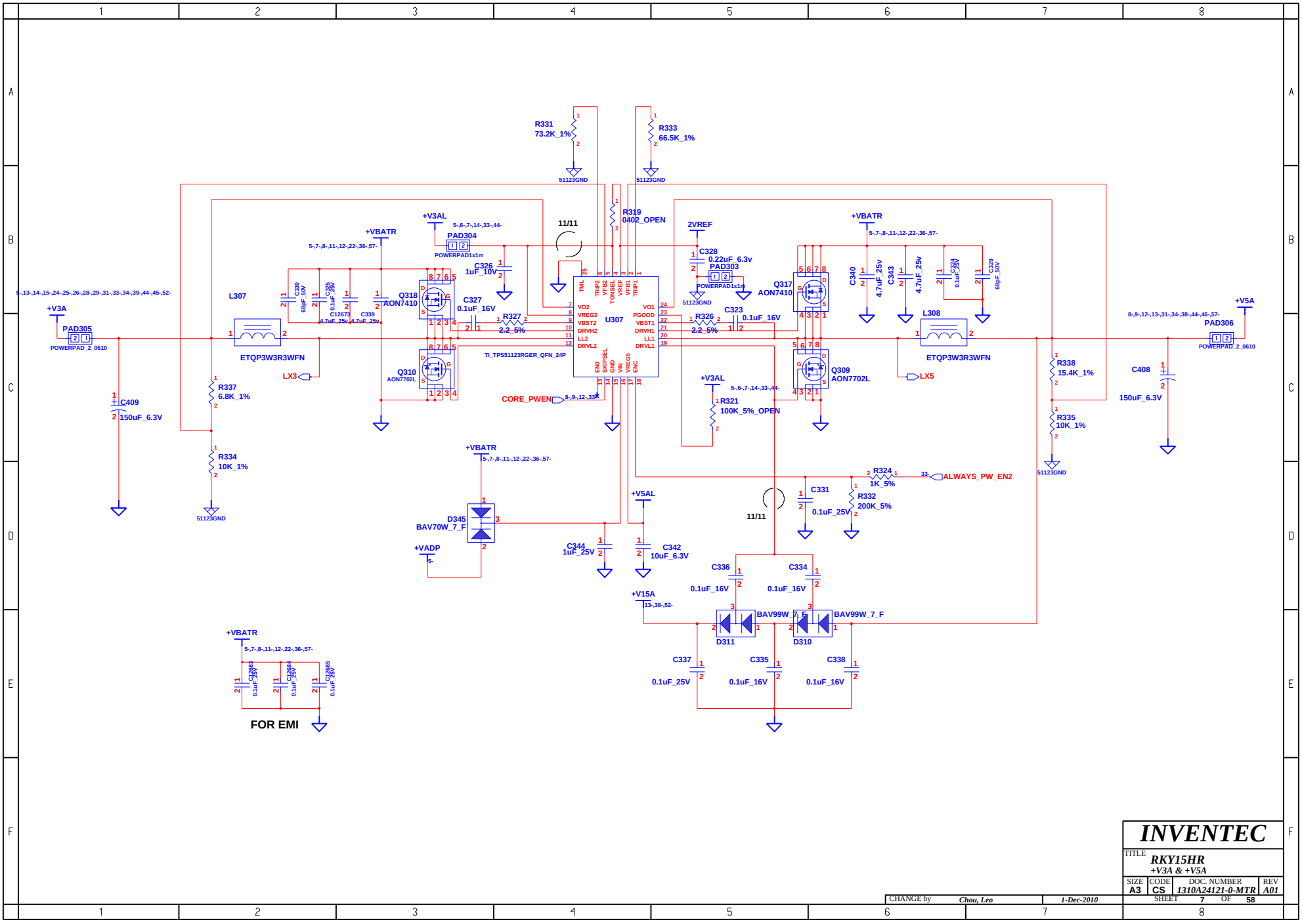

CHANGE by	Chou, Leo	1-Dec-2010	

INVENTEC

TITLE: *RKY15HR* — *+V3A & +V5A*

SIZE	CODE	DOC. NUMBER	REV
A3	CS	1310A24121-0-MTR	A01

SHEET 7 OF 58

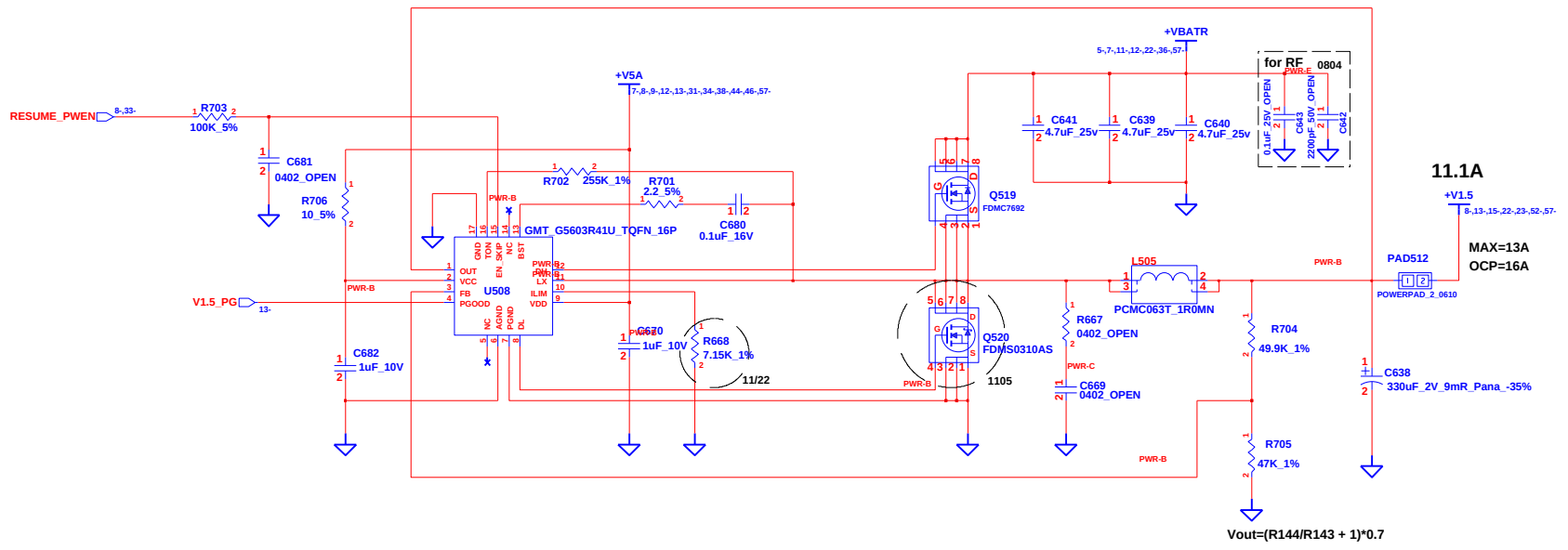

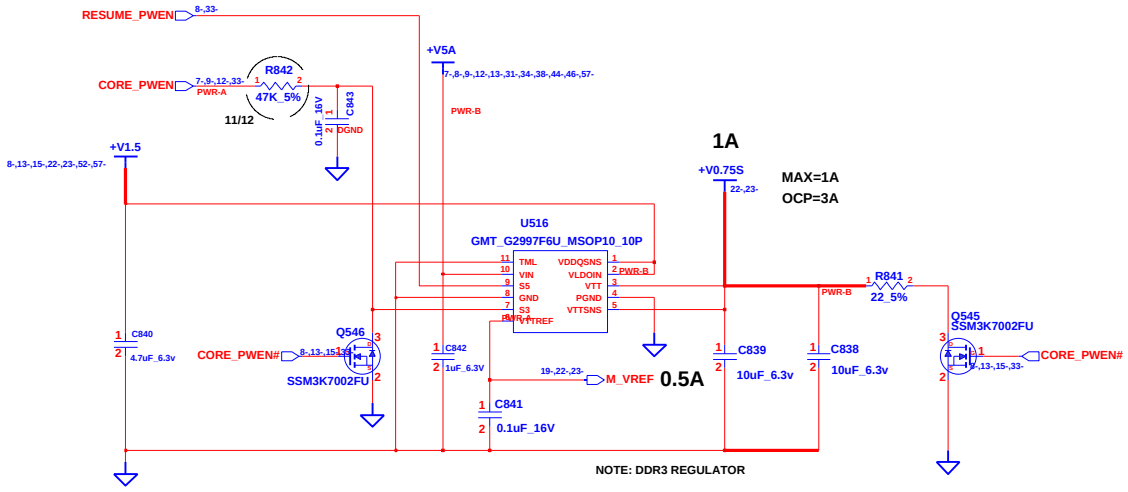

INVENTEC

TITLE
RKY15HR
+V1.5 & +V0.75

SIZE	CODE	DOC. NUMBER	REV
A3	CS	1310A24121-0-MTR	A01

SHEET 8 OF 58

CHANGE by Chou, Leo 1-Dec-2010

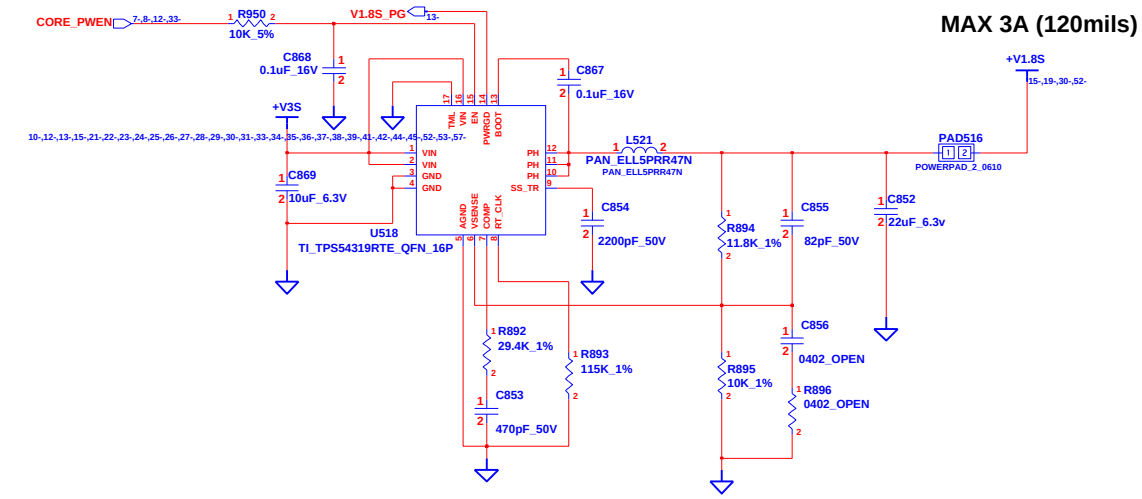

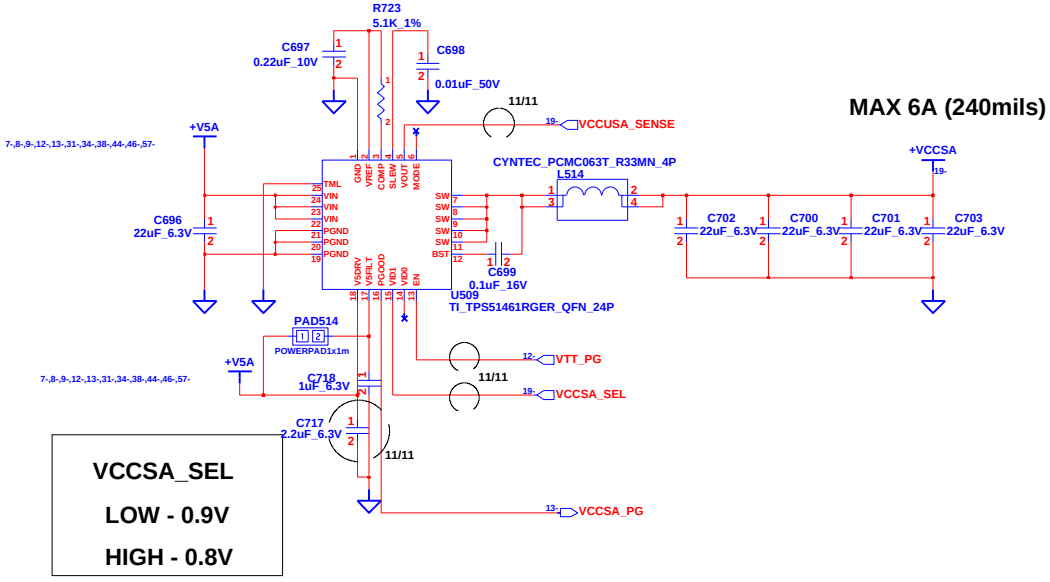

VCCSA_SEL
LOW - 0.9V
HIGH - 0.8V

INVENTEC

TITLE: *RKY15HR*
+V1.8S & +VCCSA

SIZE	CODE	DOC. NUMBER	REV
A3	CS	1310A24121-0-MTR	A01

CHANGE by *Chou, Leo* *1-Dec-2010*

SHEET 9 OF 58

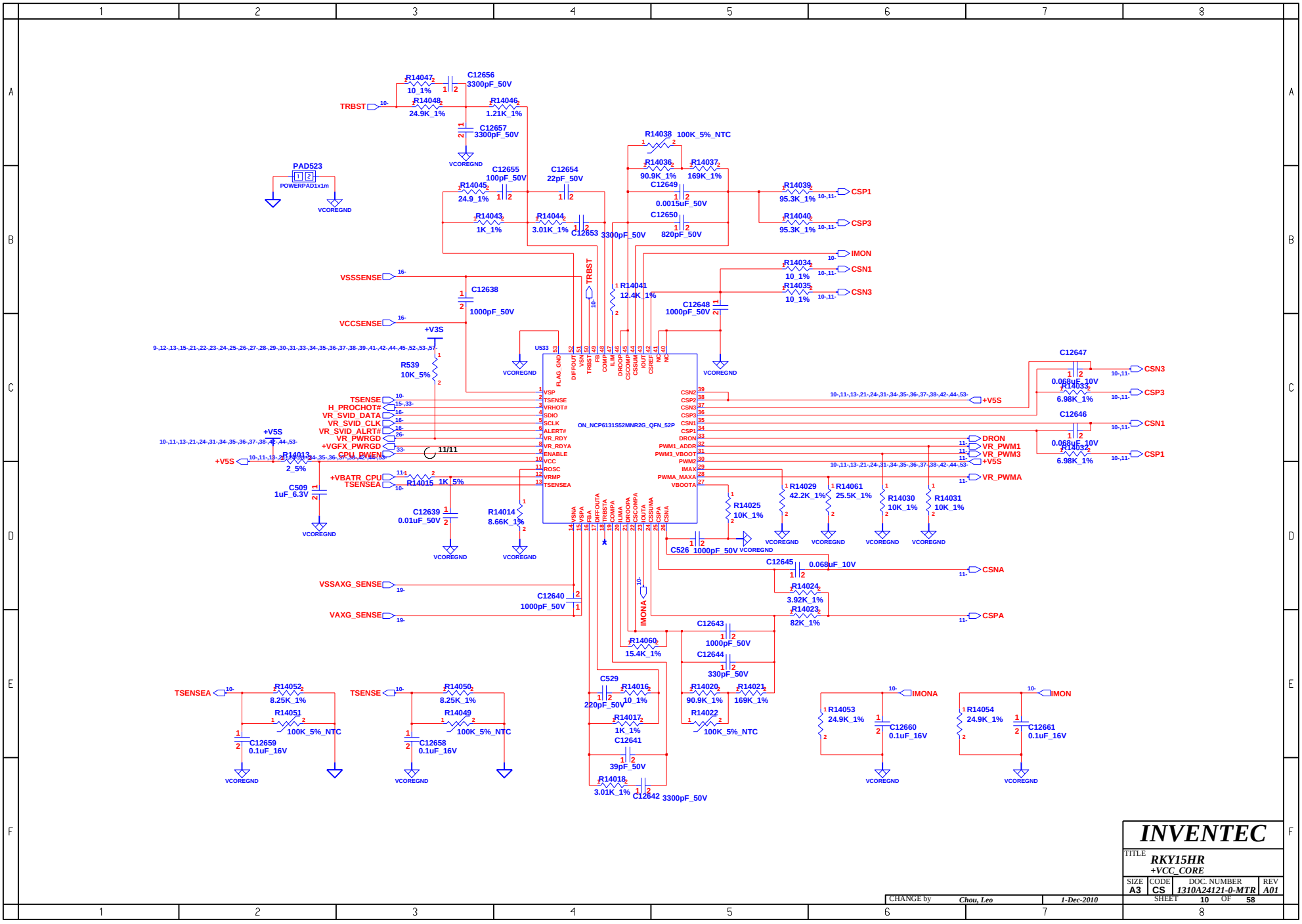

INVENTEC			
TITLE: RKY15HR +VCC_CORE			
SIZE A3	CODE CS	DOC. NUMBER 1310A24121-0-MTR	REV A01
CHANGE by Chou, Leo	1-Dec-2010	SHEET 10 OF 58	

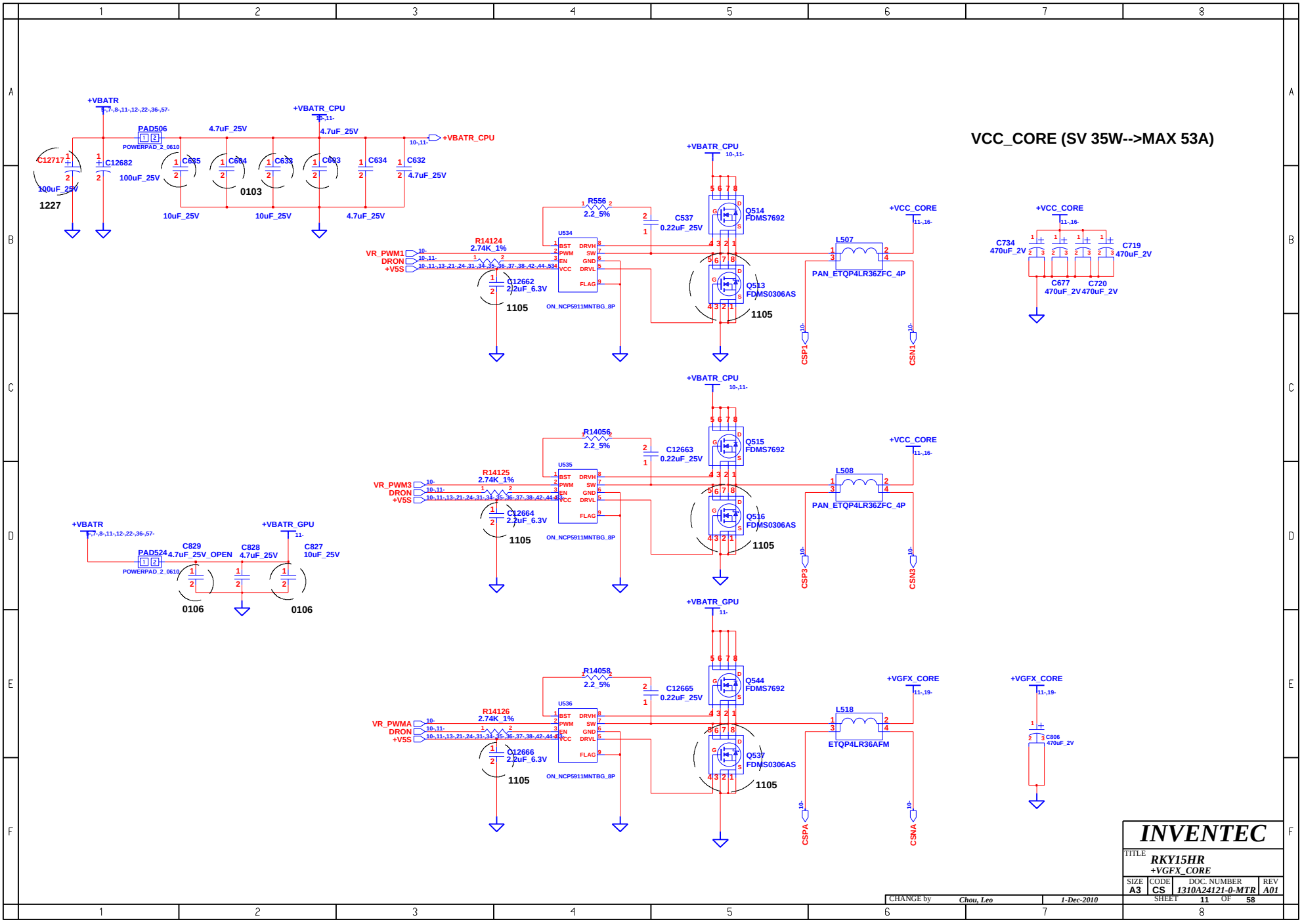
VCC_CORE (SV 35W-->MAX 53A)
+VBATR
+VBATR_CPU
+VBATR_GPU
+VCC_CORE
+VGFX_CORE
PAD506
PAD524
POWERPAD_2_0610
C12717
C12682
100uF_25V
1227
4.7uF_25V
10uF_25V
0103
C635
C634
C633
C632
C829
C828
C827
0106
R556
2.2_5%
R14124
2.74K_1%
C537
0.22uF_25V
C12662
2.2uF_6.3V
1105
U534
ON_NCP5911MNTBG_8P
VR_PWM1
DRON
+V5S
Q514
FDMS7692
Q513
FDMS0306AS
L507
PAN_ETQP4LR36ZFC_4P
CSP1
CSN1
C734
470uF_2V
C677
C720
C719
R14056
R14125
C12663
C12664
U535
Q515
Q516
L508
CSP3
CSN3
VR_PWM3
R14058
R14126
C12665
C12666
U536
Q544
Q537
L518
ETQP4LR36AFM
CSPA
CSNA
VR_PWMA
C806
470uF_2V
INVENTEC
TITLE
RKY15HR
+VGFX_CORE
SIZE A3
CODE CS
DOC. NUMBER 1310A24121-0-MTR
REV A01
SHEET 11 OF 58
CHANGE by Chou, Leo
1-Dec-2010

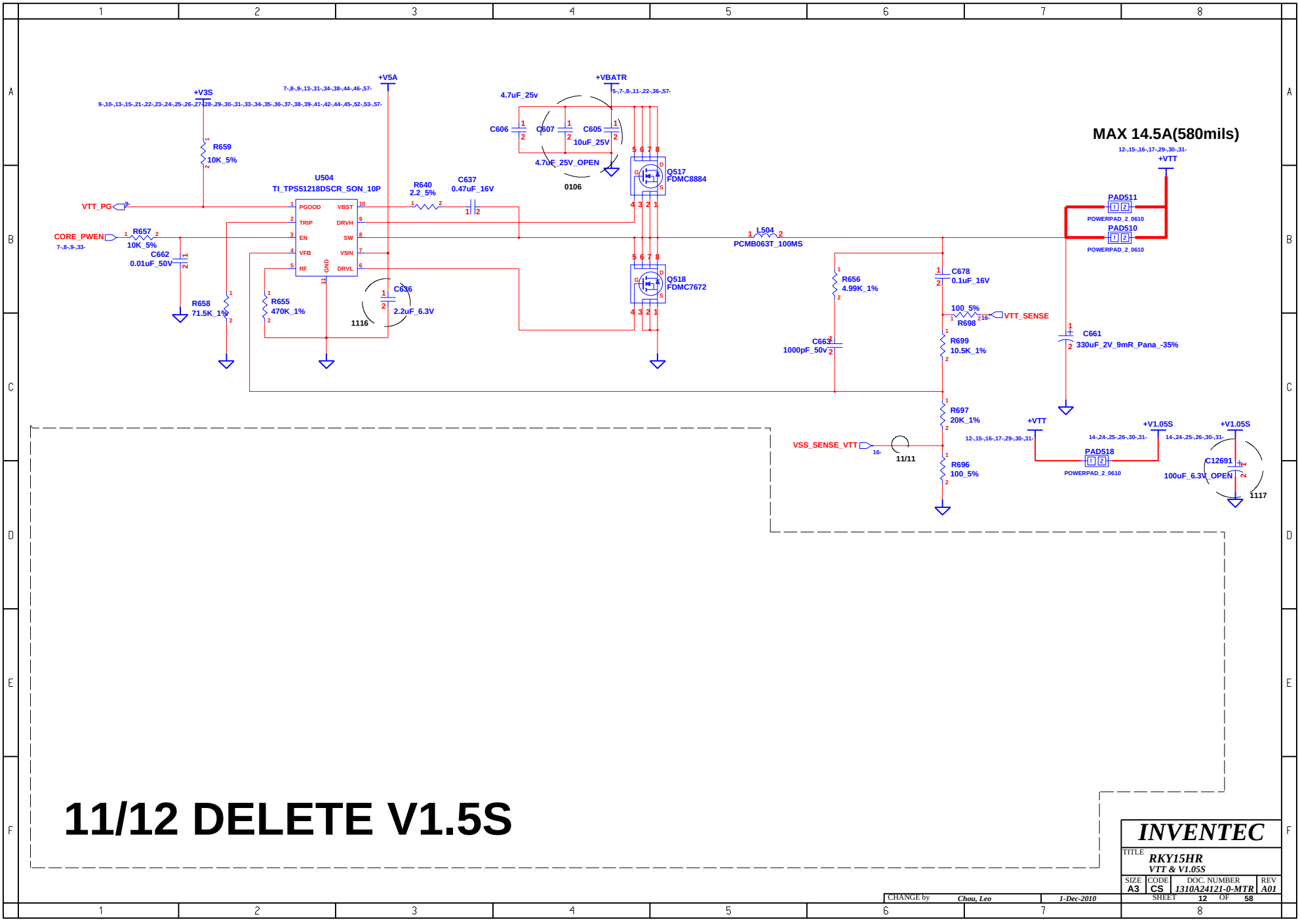

11/12 DELETE V1.5S

CHANGE by	Chou, Leo	1-Dec-2010	

INVENTEC

TITLE: *RKY15HR*
VTT & V1.05S

SIZE	CODE	DOC. NUMBER	REV
A3	CS	1310A24121-0-MTR	A01

SHEET 12 OF 58

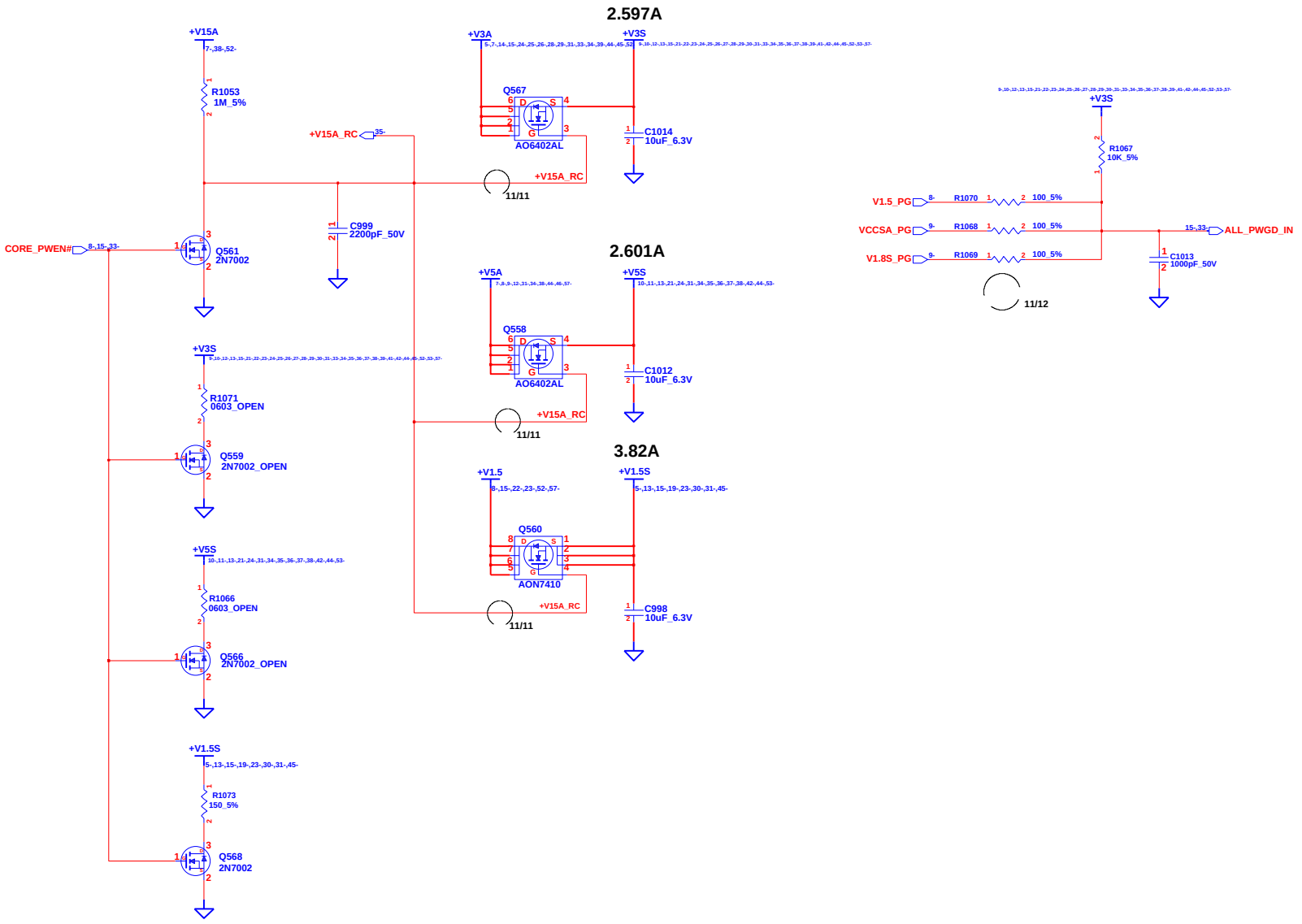

CHANGE by	Chou, Leo	1-Dec-2010	

INVENTEC

TITLE
RKY15HR
+V5S & +V3S

SIZE	CODE	DOC. NUMBER	REV
A3	CS	1310A24121-0-MTR	A01

SHEET 13 OF 58

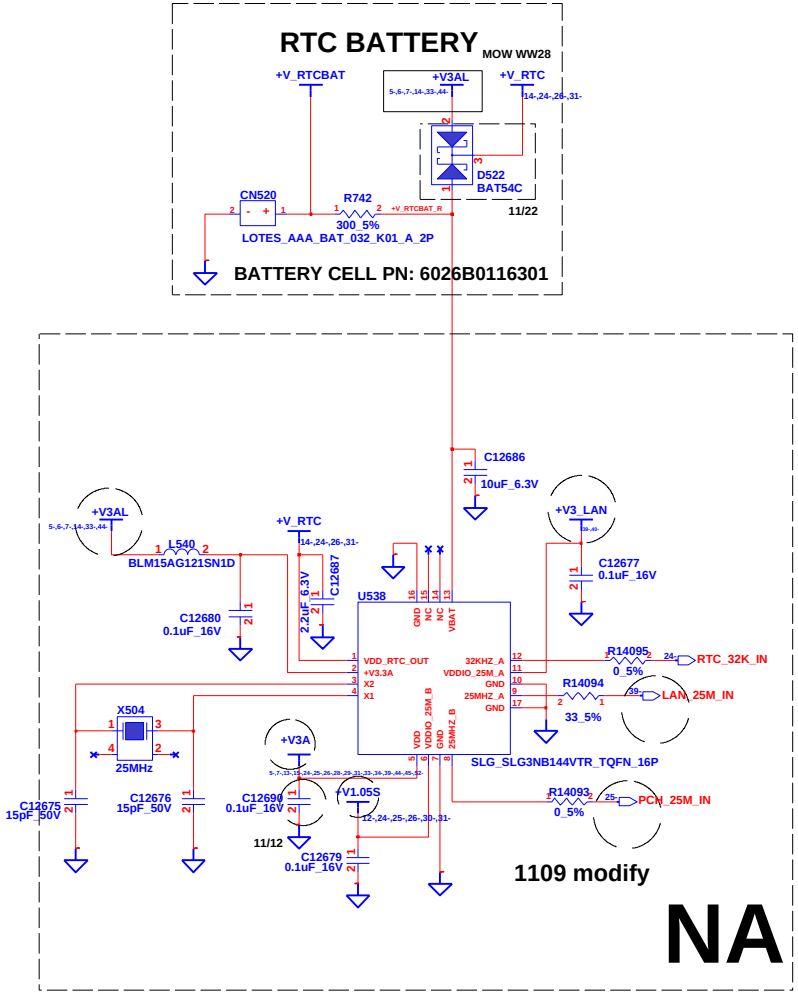

CHANGE by	Chou, Leo	1-Dec-2010	

INVENTEC

TITLE
RKY15HR
RTC BATTERY

SIZE	CODE	DOC. NUMBER	REV
A3	CS	1310A24121-0-MTR	A01

SHEET 14 OF 58

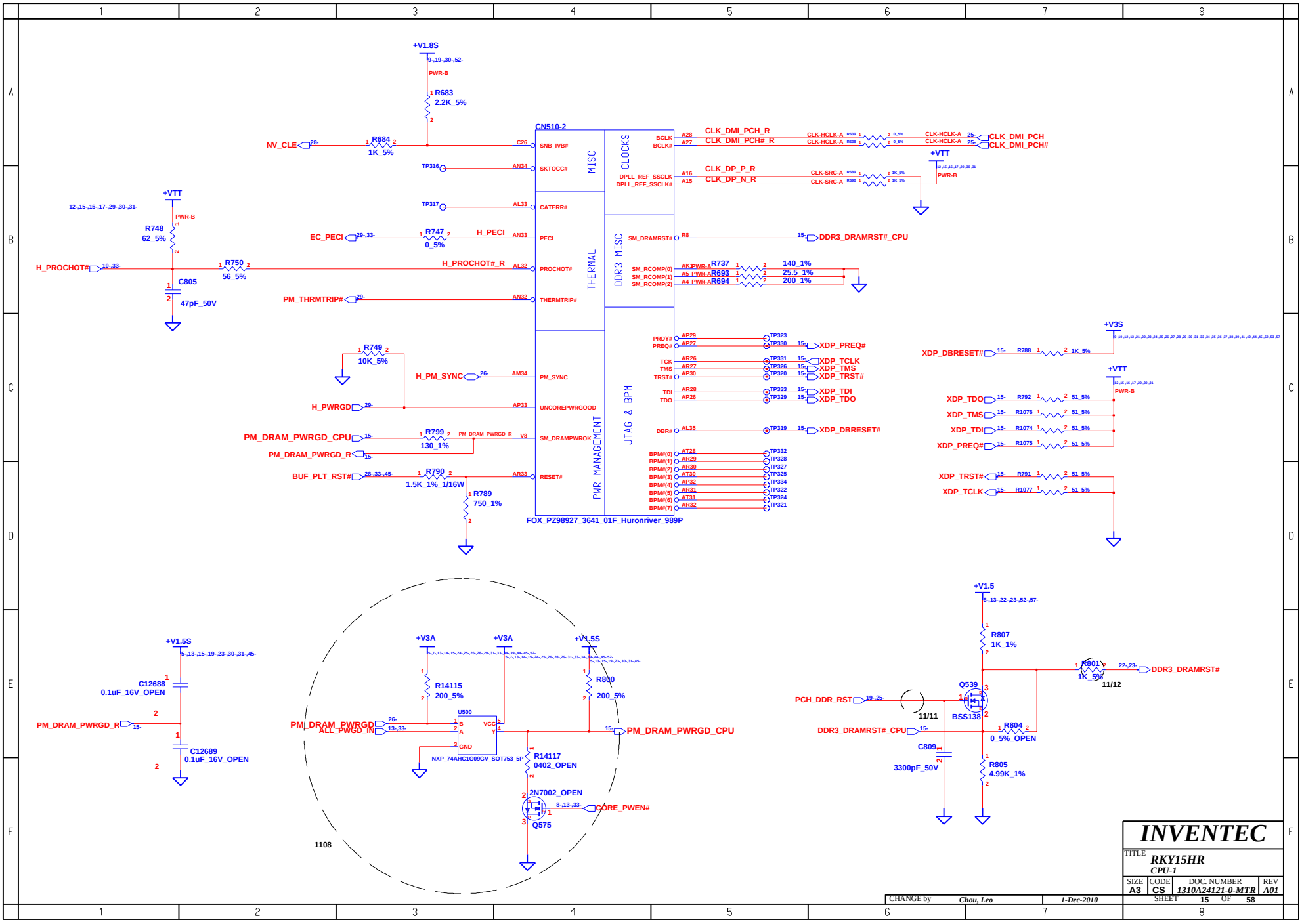

INVENTEC			
TITLE RKY15HR CPU-1			
SIZE A3	CODE CS	DOC. NUMBER 1310A24121-0-MTR	REV A01
CHANGE by Chou, Leo	1-Dec-2010	SHEET 15 OF 58	

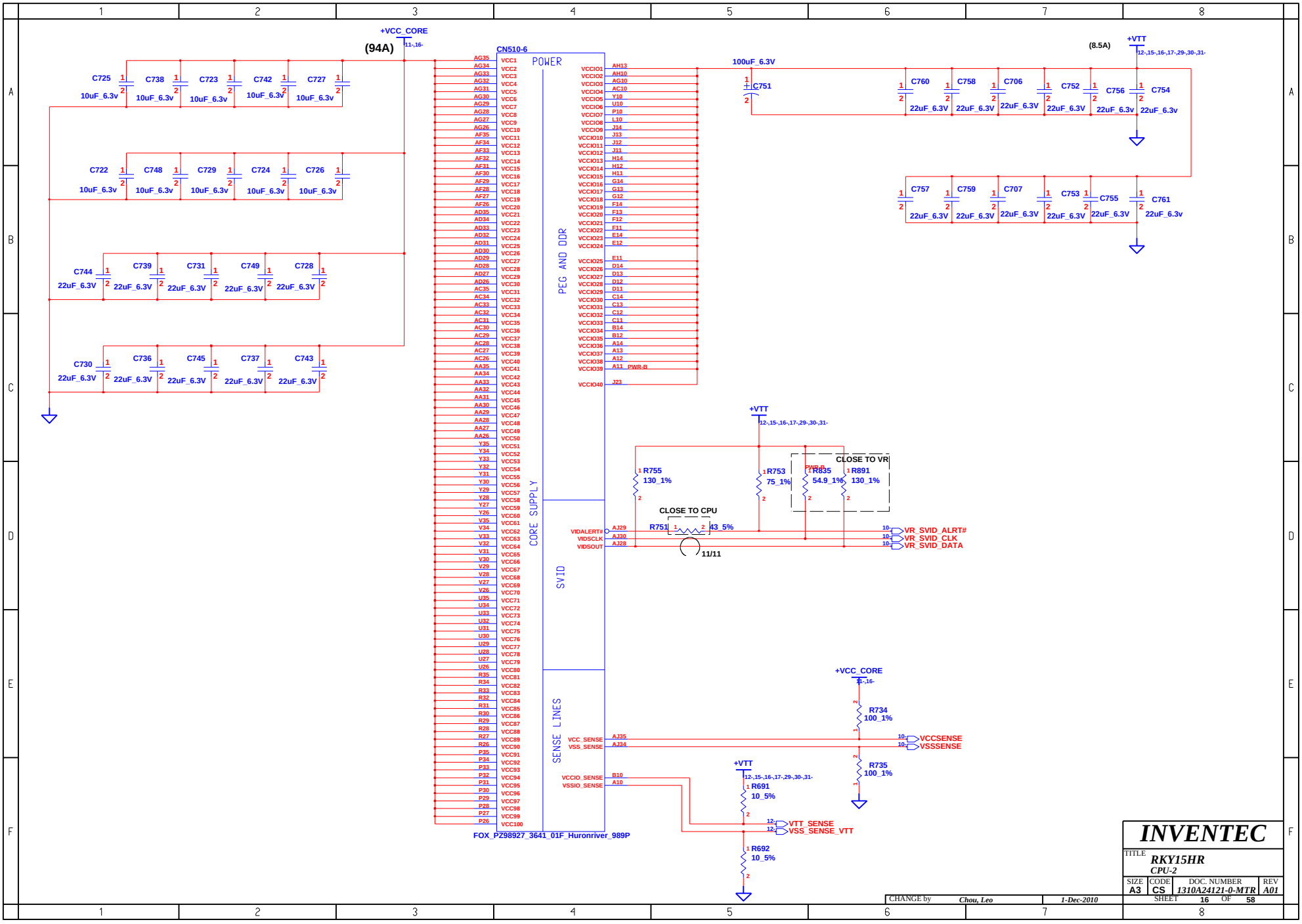
+VCC_CORE
(94A)
11-,16-
C725 10uF_6.3v
C738 10uF_6.3v
C723 10uF_6.3v
C742 10uF_6.3v
C727 10uF_6.3v
C722 10uF_6.3v
C748 10uF_6.3v
C729 10uF_6.3v
C724 10uF_6.3v
C726 10uF_6.3v
C744 22uF_6.3V
C739 22uF_6.3V
C731 22uF_6.3V
C749 22uF_6.3V
C728 22uF_6.3V
C730 22uF_6.3V
C736 22uF_6.3V
C745 22uF_6.3V
C737 22uF_6.3V
C743 22uF_6.3V
CN510-6
POWER
PEG AND DDR
CORE SUPPLY
SVID
SENSE LINES
FOX_PZ98927_3641_01F_Huronriver_989P
100uF_6.3V
C751
(8.5A)
+VTT
12-,15-,16-,17-,29-,30-,31-
C760 22uF_6.3V
C758 22uF_6.3V
C706 22uF_6.3V
C752 22uF_6.3V
C756 22uF_6.3v
C754 22uF_6.3v
C757 22uF_6.3V
C759 22uF_6.3V
C707 22uF_6.3V
C753 22uF_6.3V
C755 22uF_6.3V
C761 22uF_6.3v
R755 130_1%
R753 75_1%
R835 54.9_1%
R891 130_1%
CLOSE TO VR
CLOSE TO CPU
R751 43_5%
11/11
VIDALERT#
VIDSCLK
VIDSOUT
VR_SVID_ALRT#
VR_SVID_CLK
VR_SVID_DATA
R734 100_1%
R735 100_1%
VCC_SENSE
VSS_SENSE
VCCSENSE
VSSSENSE
VCCIO_SENSE
VSSIO_SENSE
R691 10_5%
R692 10_5%
VTT_SENSE
VSS_SENSE_VTT
INVENTEC
TITLE
RKY15HR
CPU-2
SIZE A3
CODE CS
DOC. NUMBER 1310A24121-0-MTR
REV A01
SHEET 16 OF 58
CHANGE by Chou, Leo
1-Dec-2010

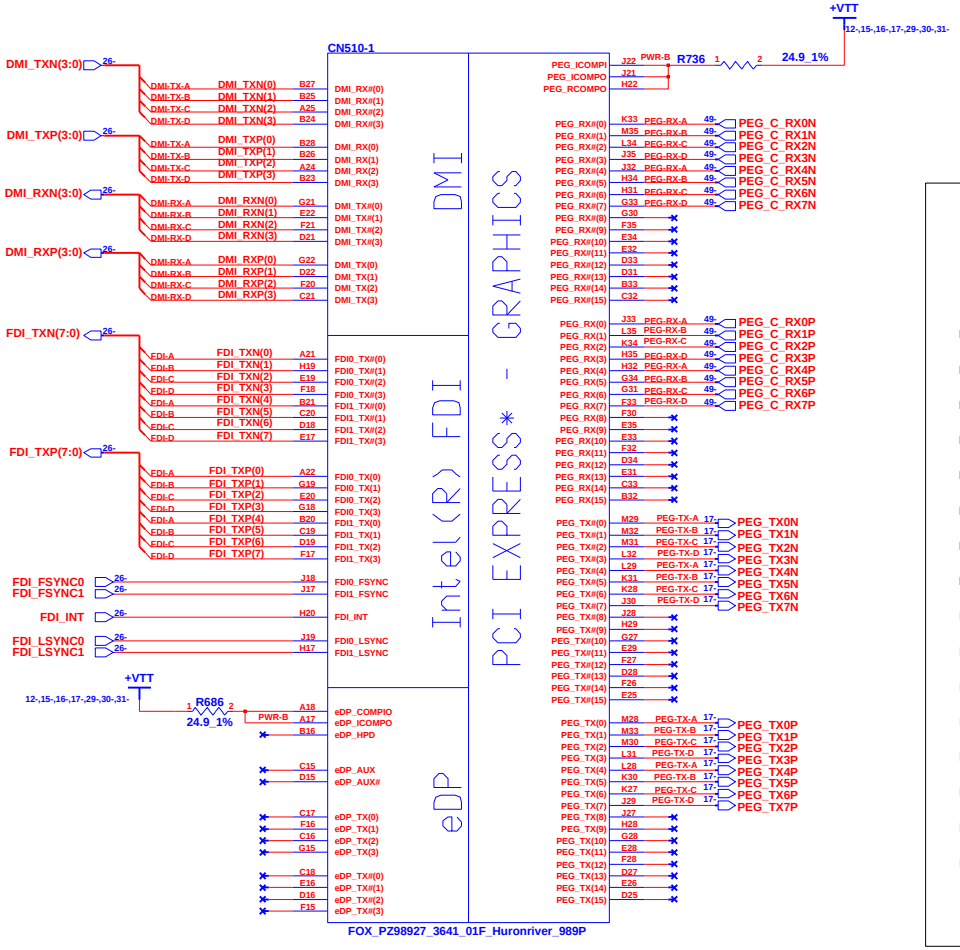

CLOSED TO CPU

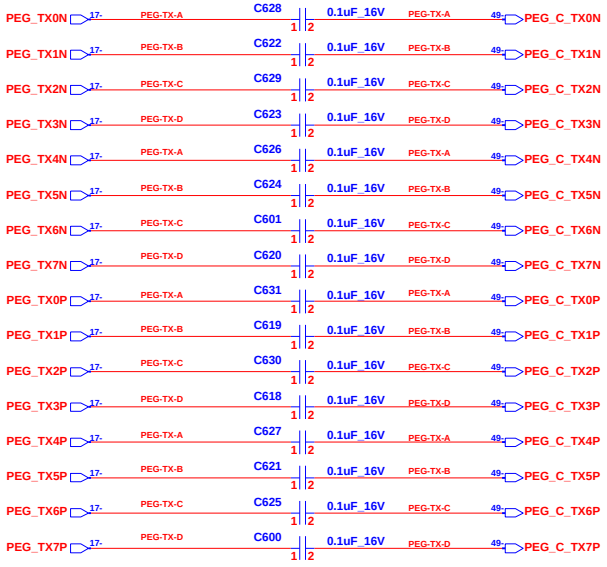

NA FOR UMA

CHANGE by	Chou, Leo	1-Dec-2010	

INVENTEC

TITLE: RKY15HR
CPU-3

SIZE	CODE	DOC. NUMBER	REV
A3	CS	1310A24121-0-MTR	A01

SHEET 17 OF 58

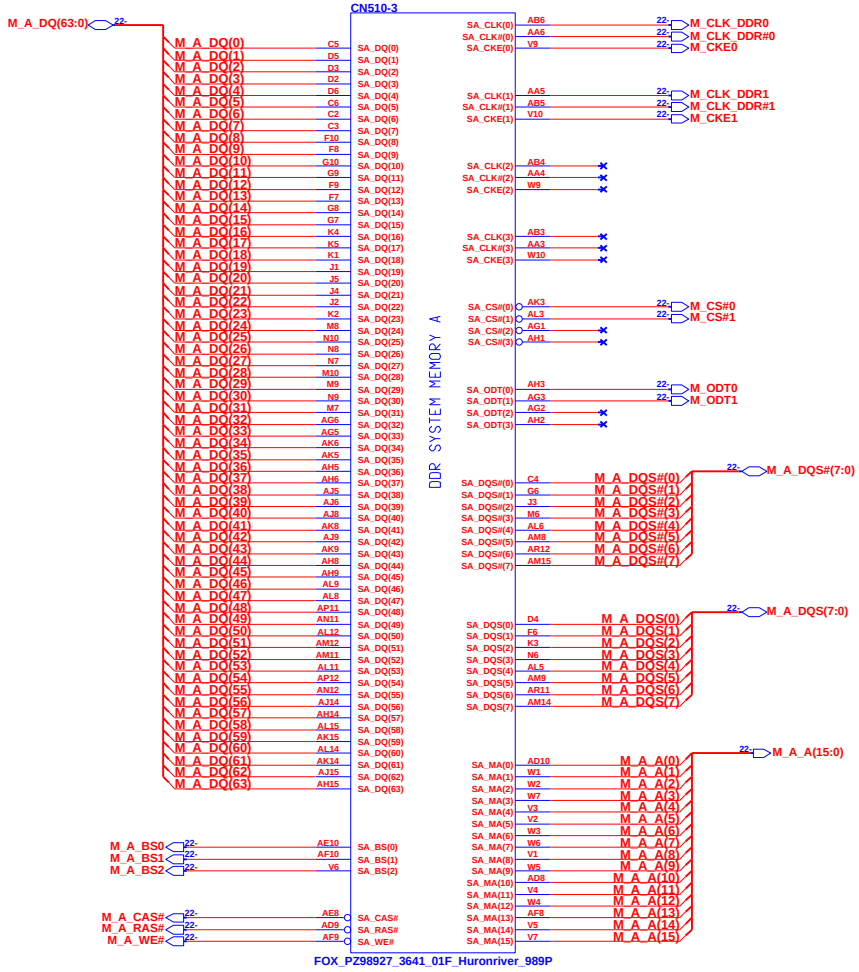

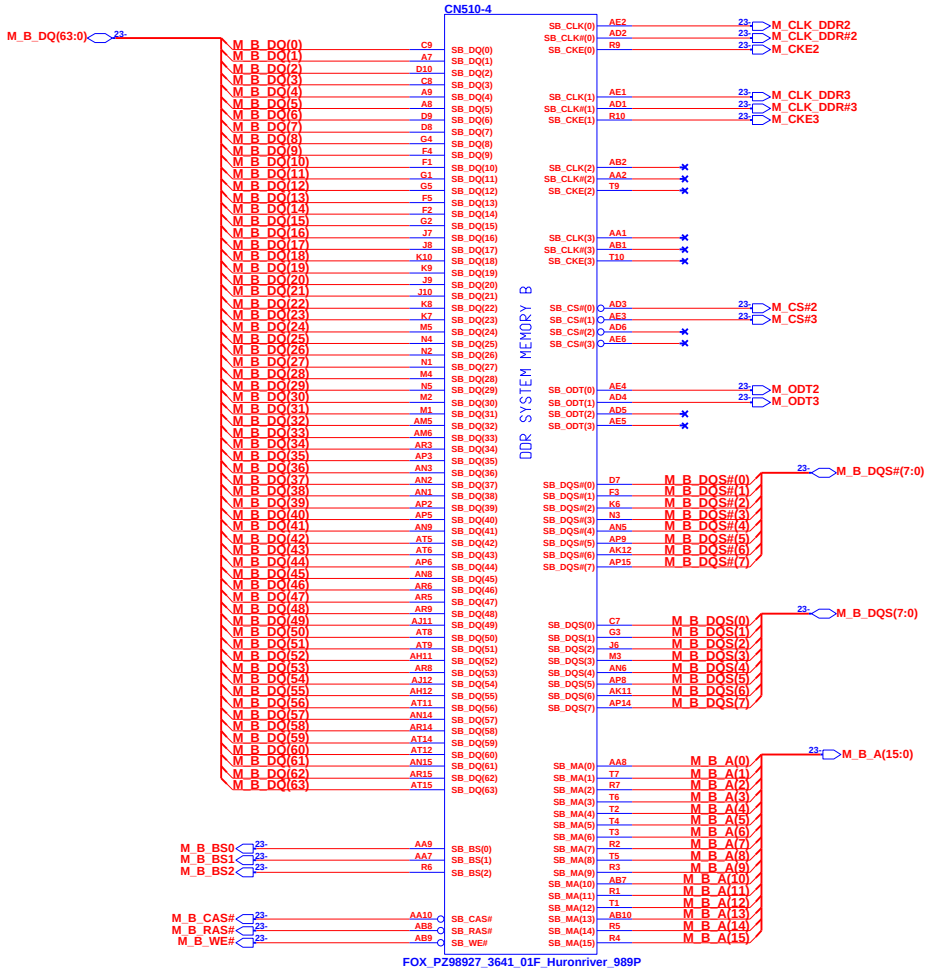

CHANGE by	Chou, Leo	1-Dec-2010	

INVENTEC

TITLE: RKY15HR
CPU-4

SIZE	CODE	DOC. NUMBER	REV
A3	CS	1310A24121-0-MTR	A01

SHEET 18 OF 58

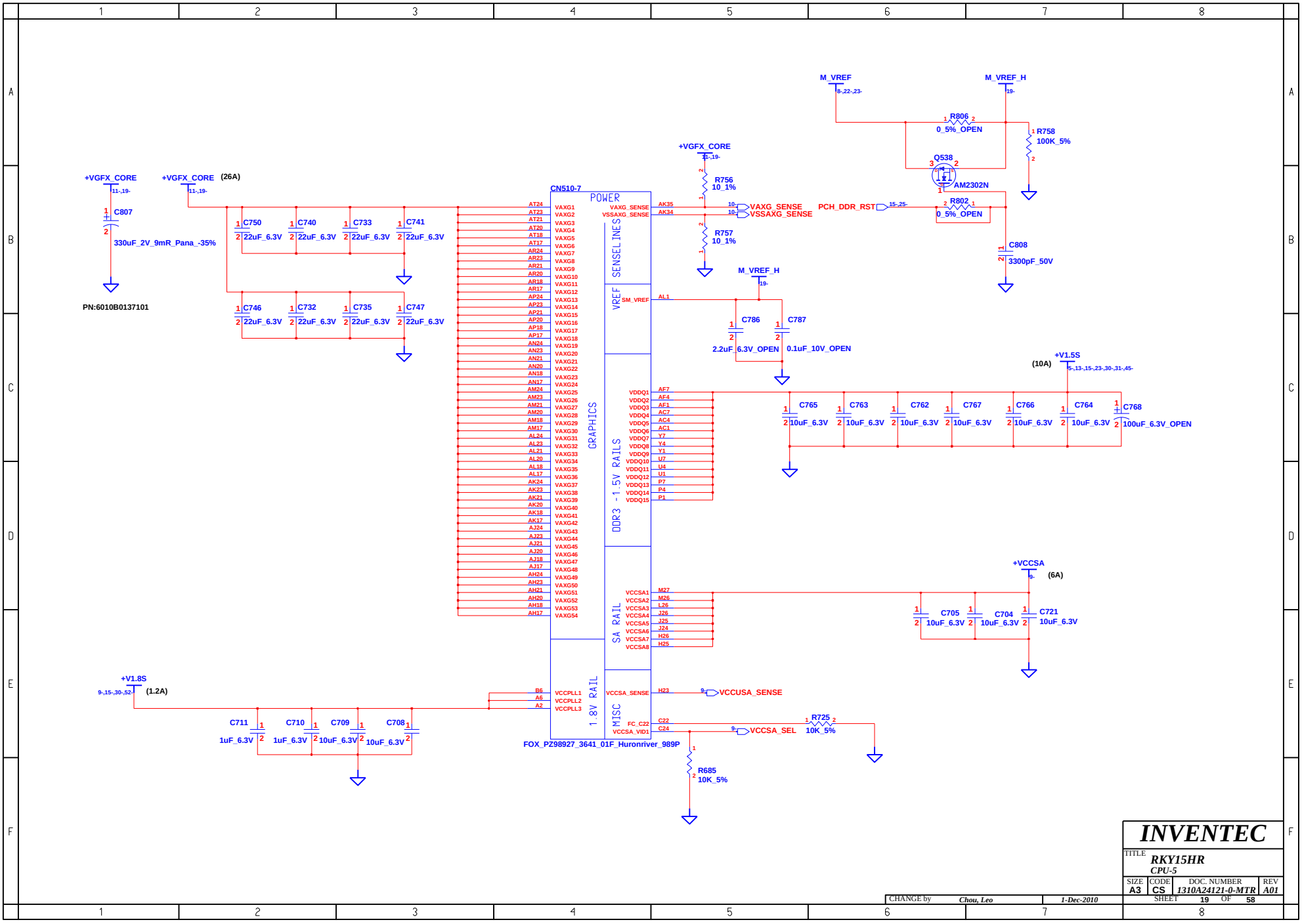

INVENTEC

TITLE
RKY15HR
CPU-5

SIZE	CODE	DOC. NUMBER	REV
A3	CS	1310A24121-0-MTR	A01

SHEET 19 OF 58

CHANGE by Chou, Leo 1-Dec-2010

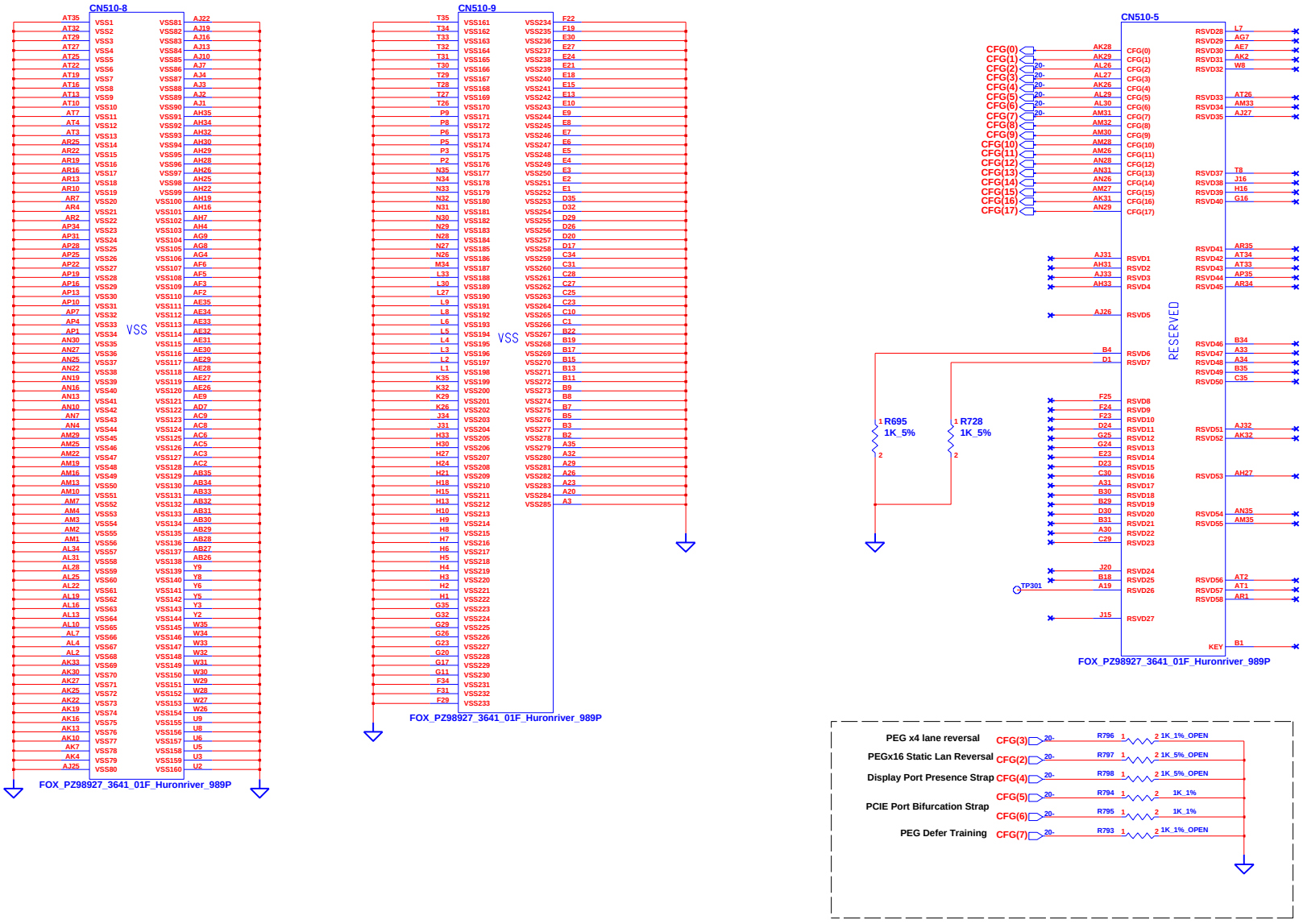

STRAP PIN

CHANGE by	Chou, Leo	1-Dec-2010	

INVENTEC

TITLE: RKY15HR
CPU-6

SIZE	CODE	DOC. NUMBER	REV
A3	CS	1310A24121-0-MTR	A01

SHEET 20 OF 58

*BOM
CN500 : 6012A0081607

FAN CONN

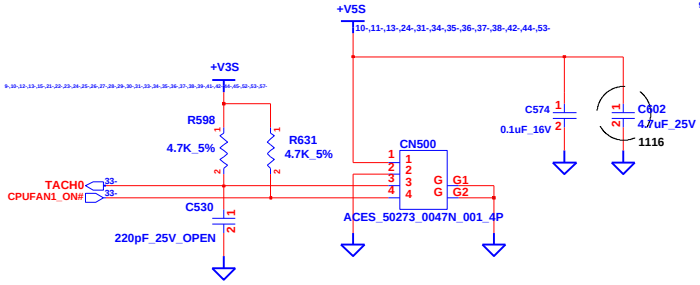

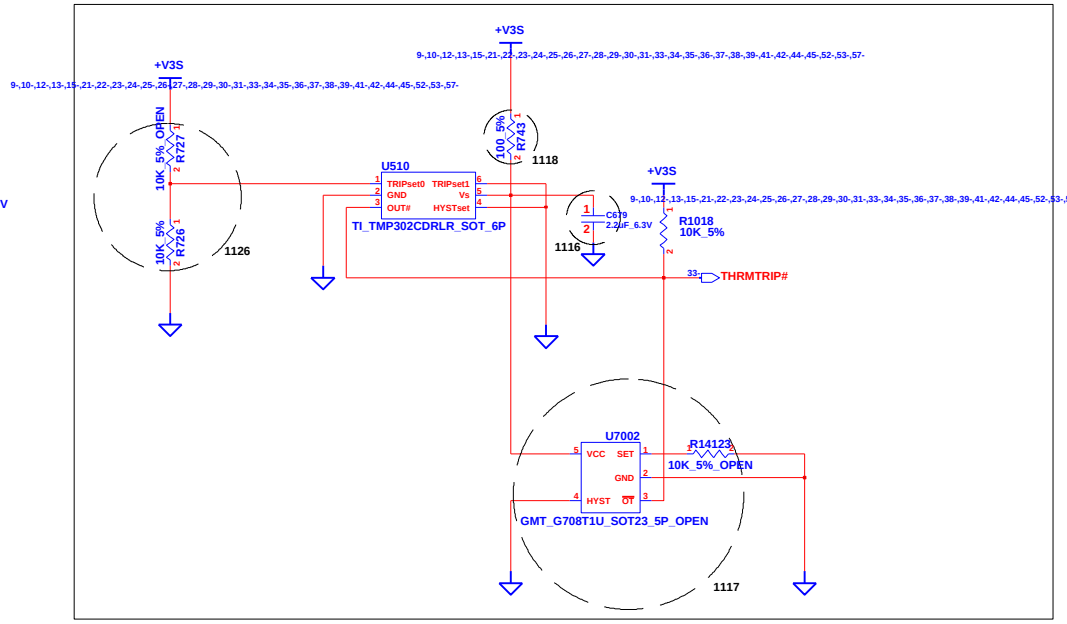

CHANGE by	Chou, Leo	1-Dec-2010	

INVENTEC

TITLE
RKY15HR
Thermal, Fan & XDP

SIZE	CODE	DOC. NUMBER	REV
A3	CS	*1310A24121-0-MTR*	*A01*

SHEET 21 OF 58

DDR3 SO-DIMM 1

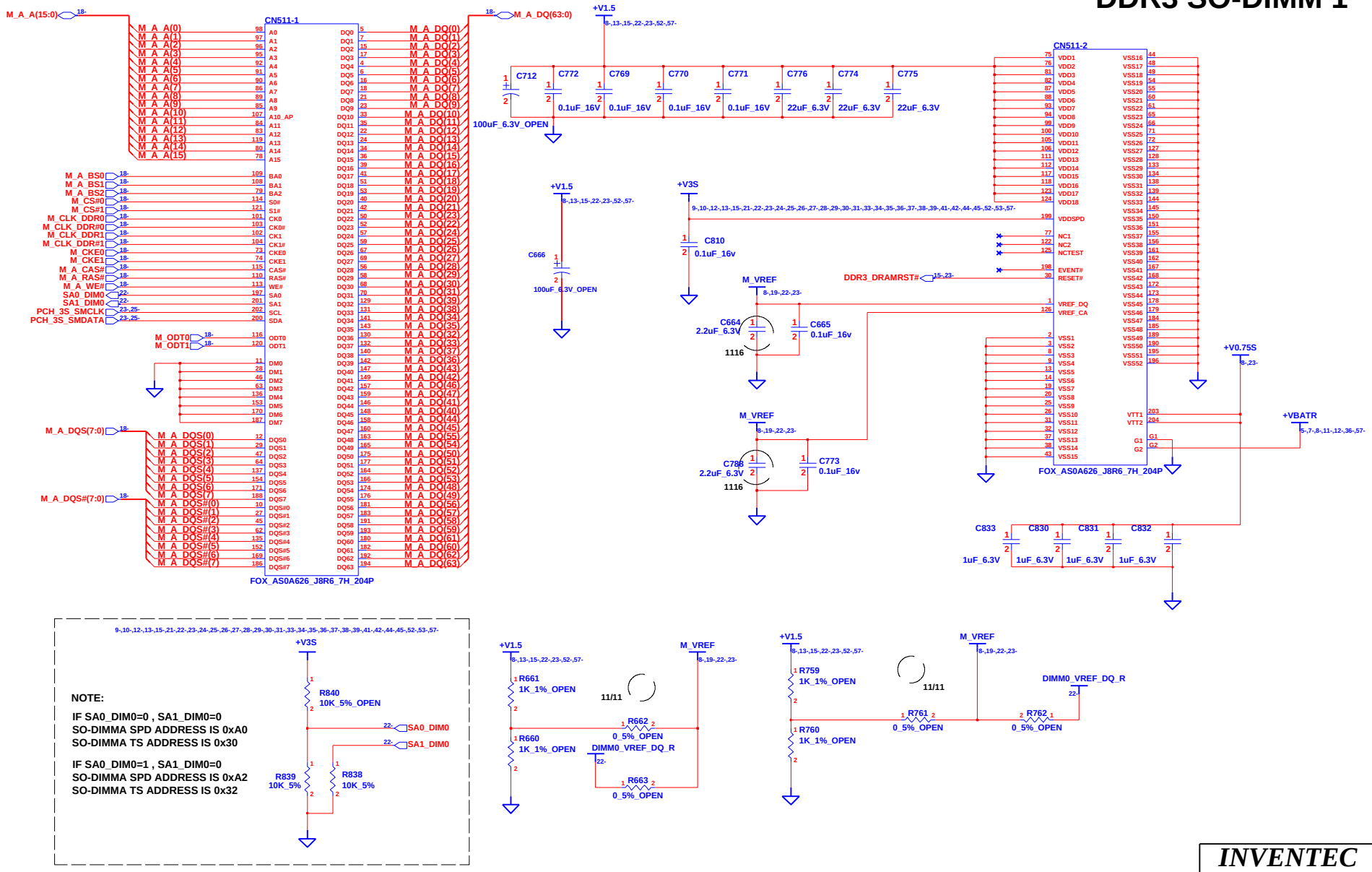

CHANGE by	Chou, Leo	1-Dec-2010

INVENTEC

TITLE: *RKY15HR*
DDR3-1

SIZE	CODE	DOC. NUMBER	REV
A3	CS	1310A24121-0-MTR	A01

SHEET 22 OF 58

DDR3 SO-DIMM 2

CN1005 (lower) : 6026B0121102
*BOM

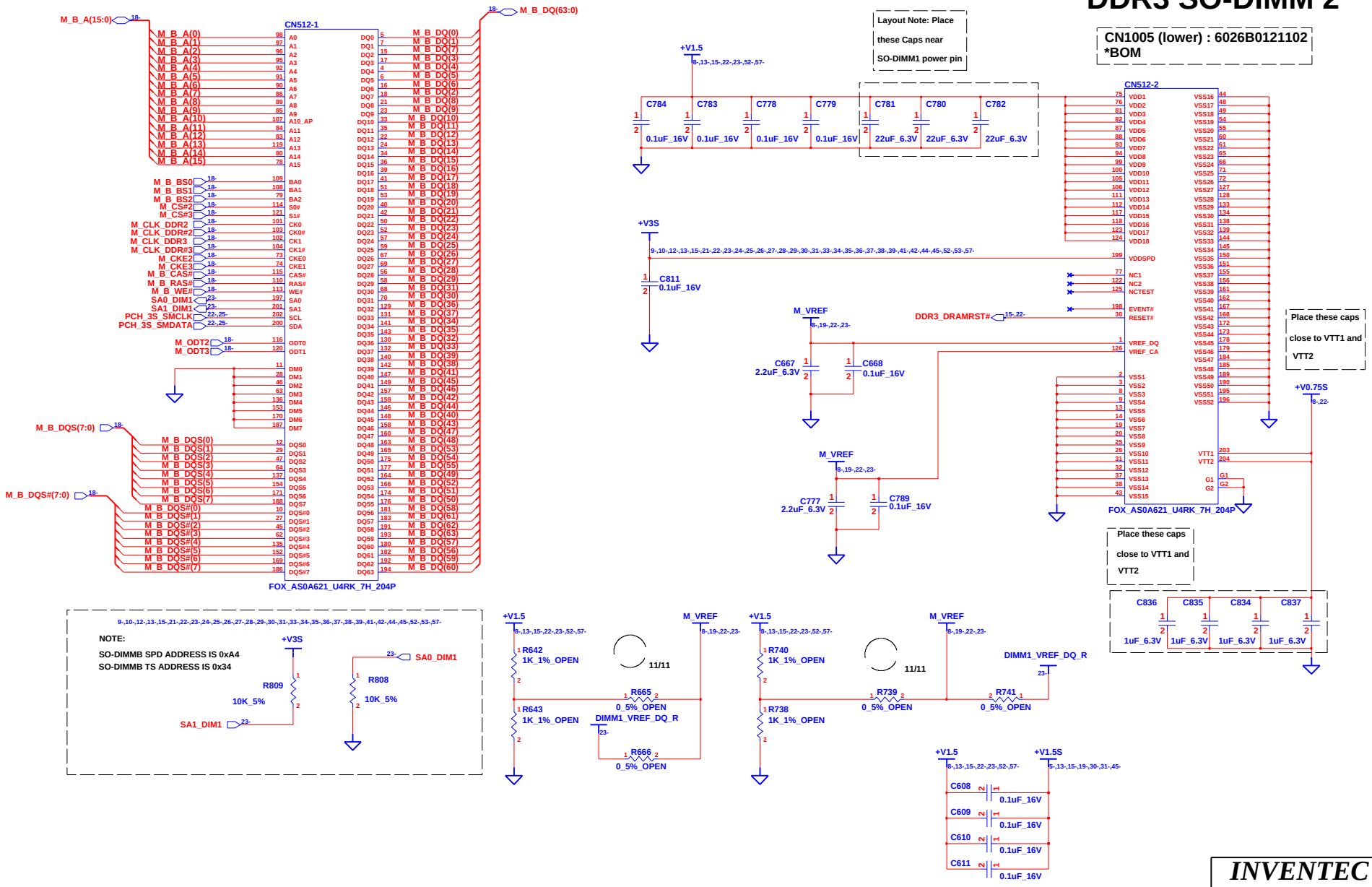

CHANGE by	Chou, Leo	1-Dec-2010	

INVENTEC

TITLE: RKY15HR
DDR3-2

SIZE	CODE	DOC. NUMBER	REV
A3	CS	1310A24121-0-MTR	A01

SHEET 23 OF 58

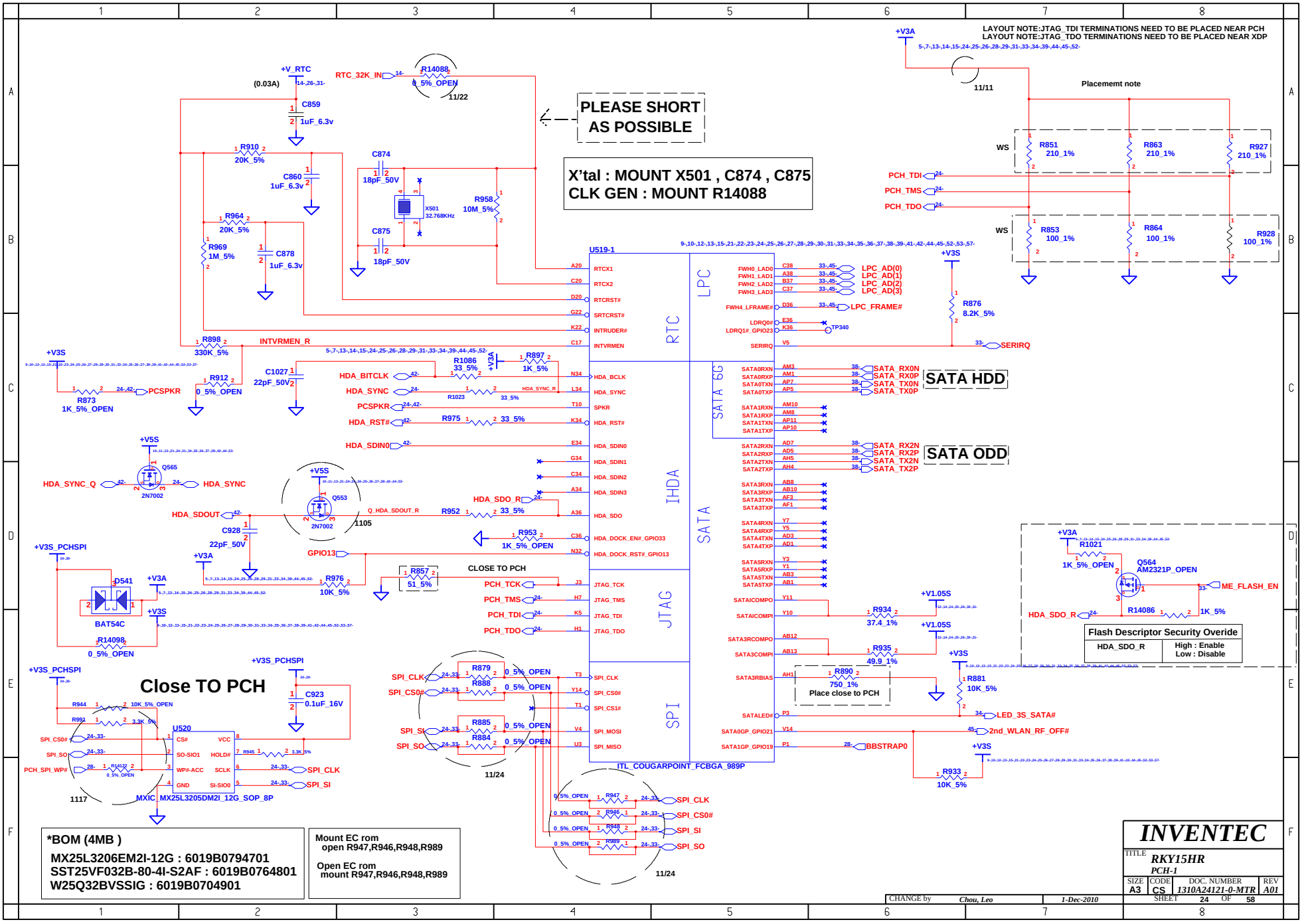
LAYOUT NOTE:JTAG_TDI TERMINATIONS NEED TO BE PLACED NEAR PCH
LAYOUT NOTE:JTAG_TDO TERMINATIONS NEED TO BE PLACED NEAR XDP
Placememt note
PLEASE SHORT AS POSSIBLE
X'tal : MOUNT X501 , C874 , C875
CLK GEN : MOUNT R14088
U519-1
RTC
LPC
IHDA
SATA
JTAG
SPI
SATA 6G
SATA HDD
SATA ODD
ITL_COUGARPOINT_FCBGA_989P
Close TO PCH
CLOSE TO PCH
Place close to PCH
Flash Descriptor Security Overide
HDA_SDO_R
High : Enable
Low : Disable
U520
MXIC_MX25L3205DM2I_12G_SOP_8P
*BOM (4MB)
MX25L3206EM2I-12G : 6019B0794701
SST25VF032B-80-4I-S2AF : 6019B0764801
W25Q32BVSSIG : 6019B0704901
Mount EC rom
open R947,R946,R948,R989
Open EC rom
mount R947,R946,R948,R989
INVENTEC
TITLE RKY15HR
PCH-1
SIZE A3
CODE CS
DOC. NUMBER 1310A24121-0-MTR
REV A01
SHEET 24 OF 58
CHANGE by Chou, Leo
1-Dec-2010

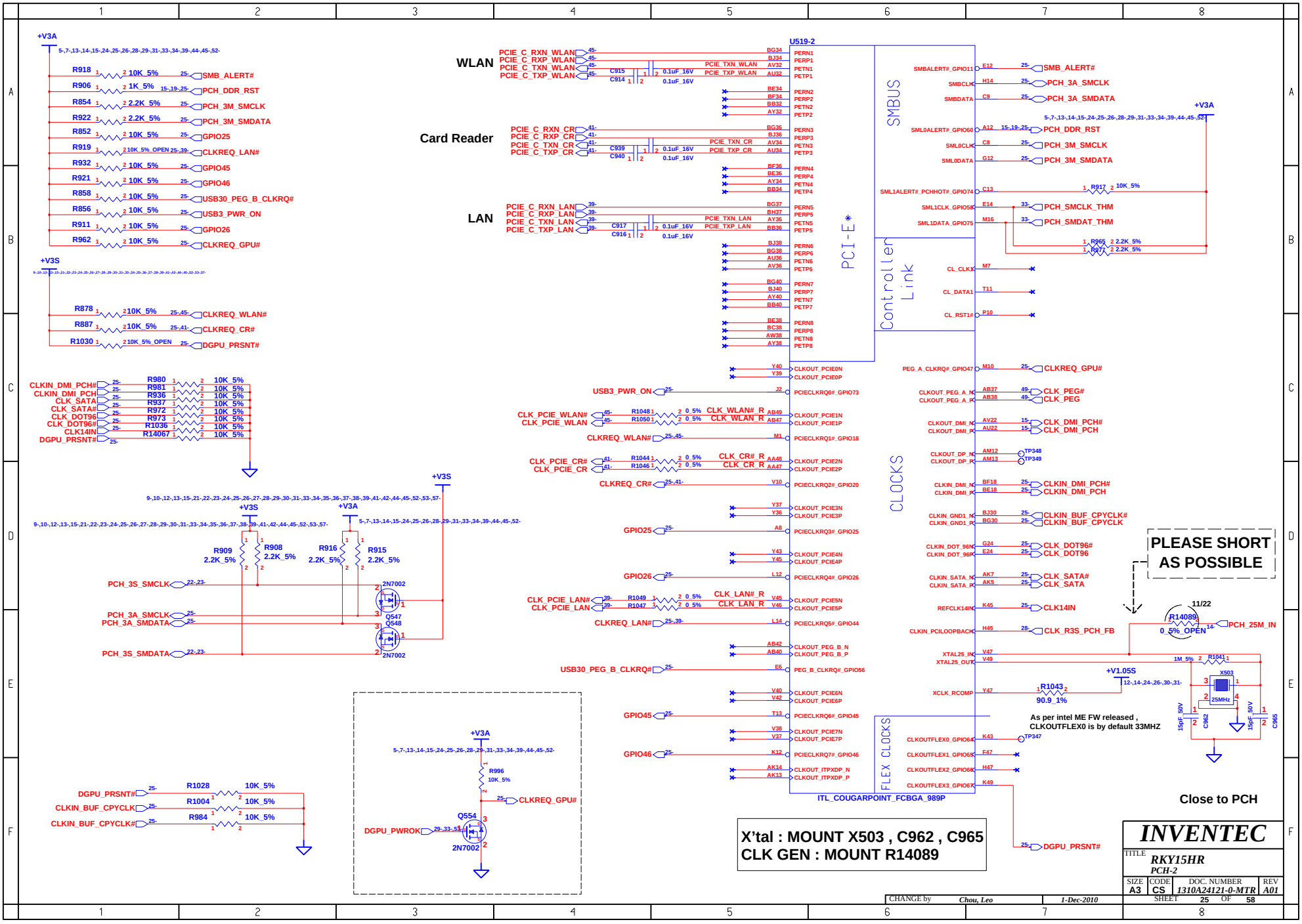
U519-2
WLAN
Card Reader
LAN
PCI-E*
Controller Link
SMBUS
CLOCKS
FLEX CLOCKS
ITL_COUGARPOINT_FCBGA_989P
PLEASE SHORT AS POSSIBLE
Close to PCH
As per intel ME FW released , CLKOUTFLEX0 is by default 33MHZ
X'tal : MOUNT X503 , C962 , C965
CLK GEN : MOUNT R14089
INVENTEC
RKY15HR
PCH-2
SIZE A3
CODE CS
DOC. NUMBER 1310A24121-0-MTR
REV A01
SHEET 25 OF 58
CHANGE by Chou, Leo
1-Dec-2010

Note: 1.SLP_SUS and SUSACK# are NC if DSW is not supported
2.DPWROK should connect to RSMRST# if DSW not supported
3.PCH_DPWROK pull up to +V3S enables DSW wupport. No install R5261 to disable DSW

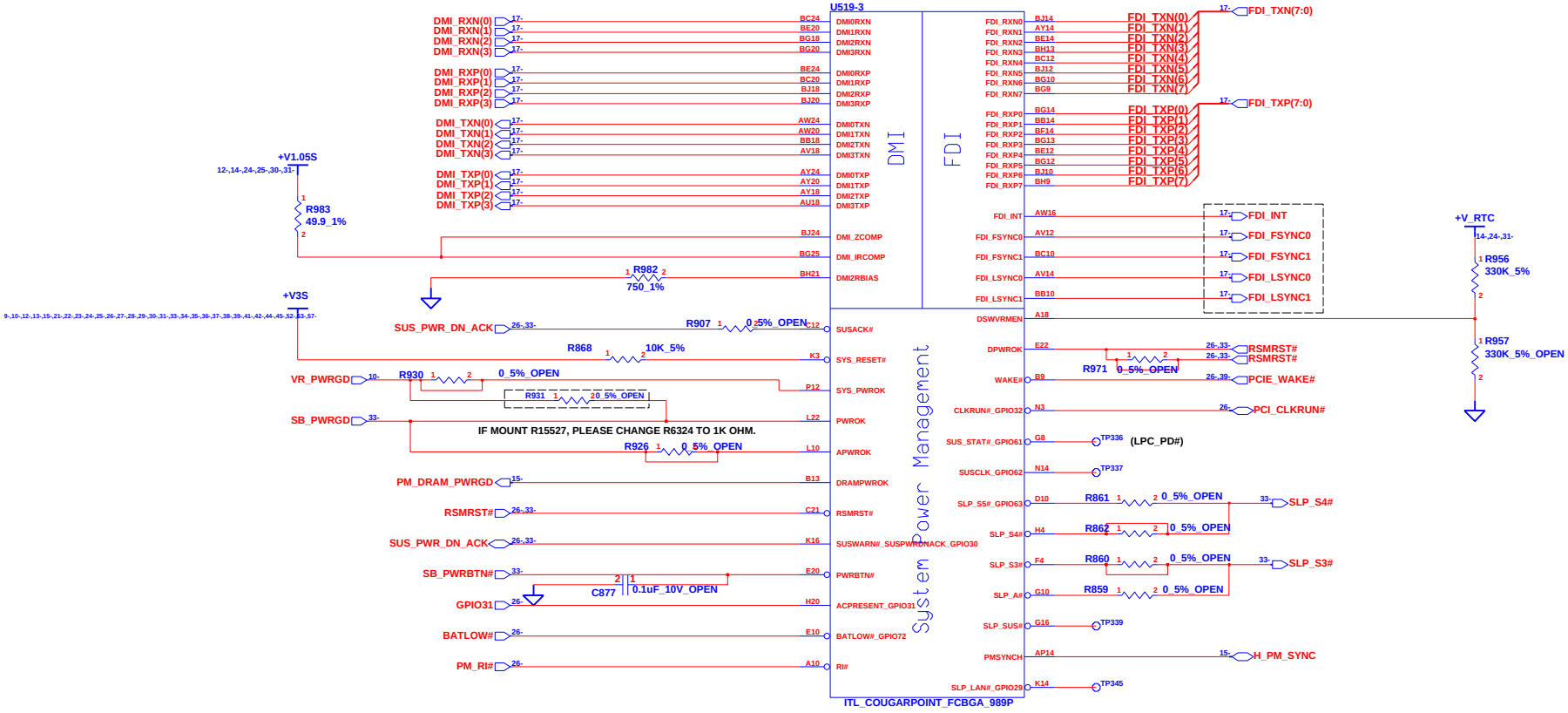

INVENTEC

TITLE RKY15HR
PCH-3

SIZE	CODE	DOC. NUMBER	REV
A3	CS	1310A24121-0-MTR	A01

CHANGE by Chou, Leo 1-Dec-2010

SHEET 26 OF 58

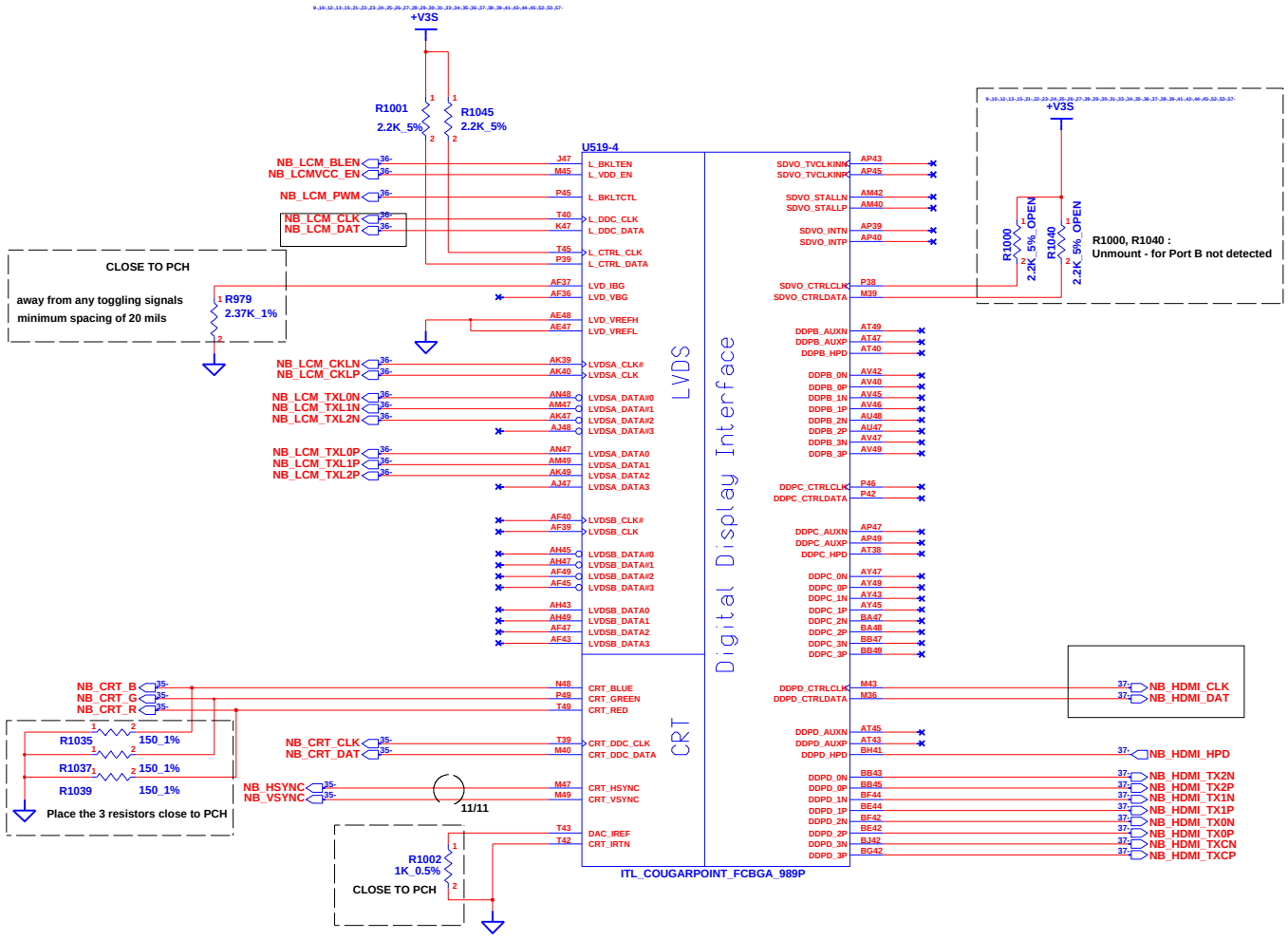

CHANGE by	Chou, Leo	1-Dec-2010	

INVENTEC

TITLE: *RKY15HR*
PCH-4

SIZE	CODE	DOC. NUMBER	REV
A3	CS	1310A24121-0-MTR	A01

SHEET 27 OF 58

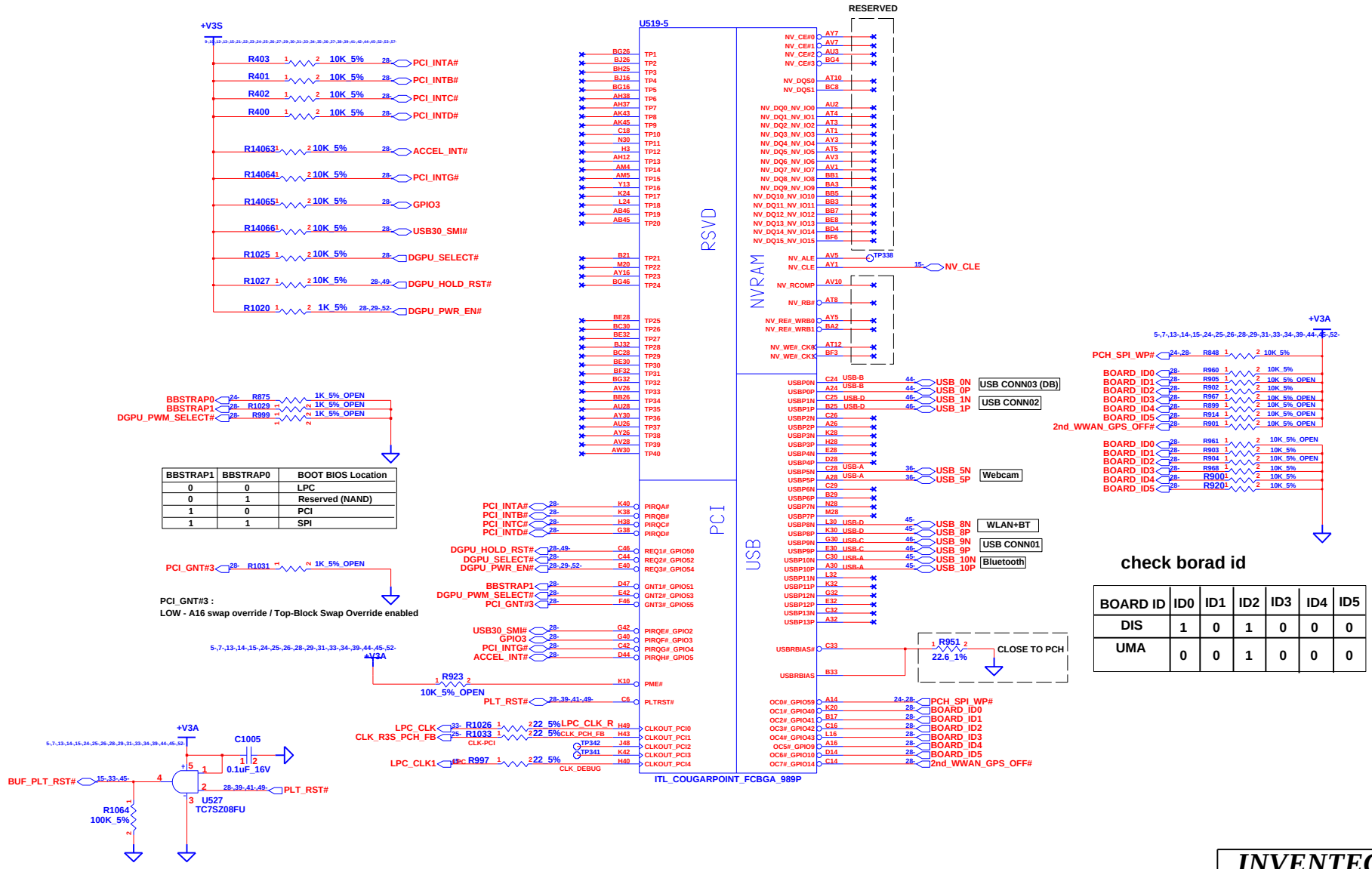

BBSTRAP1	BBSTRAP0	BOOT BIOS Location
0	0	LPC
0	1	Reserved (NAND)
1	0	PCI
1	1	SPI

PCI_GNT#3 :
LOW - A16 swap override / Top-Block Swap Override enabled

check borad id

BOARD ID	ID0	ID1	ID2	ID3	ID4	ID5
DIS	1	0	1	0	0	0
UMA	0	0	1	0	0	0

INVENTEC

TITLE
RKY15HR
PCH-5

SIZE	CODE	DOC. NUMBER	REV
A3	CS	1310A24121-0-MTR	A01

SHEET 28 OF 58

CHANGE by *Chou, Leo* *1-Dec-2010*

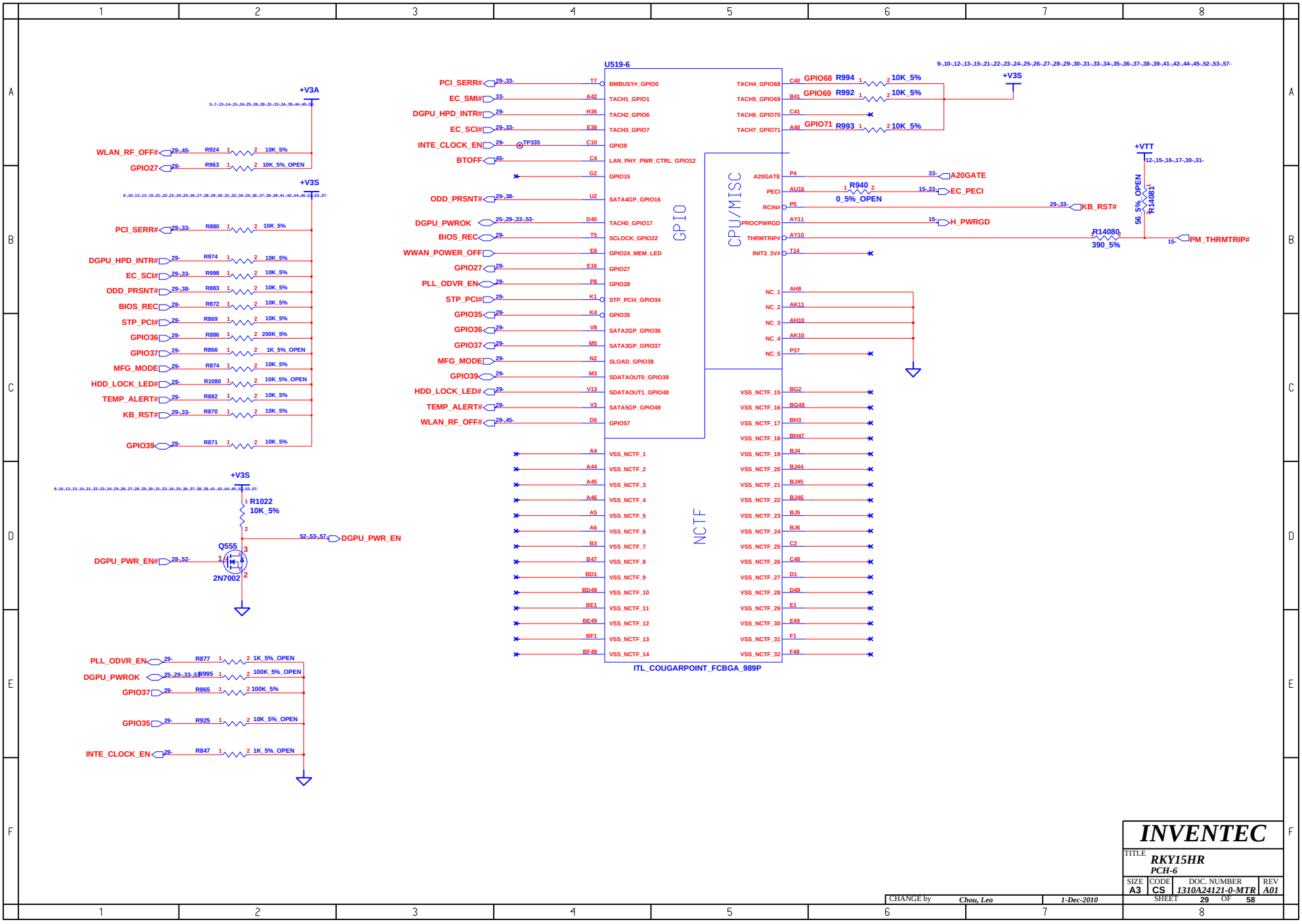

INVENTEC			
TITLE RKY15HR PCH-6			
SIZE A3	CODE CS	DOC. NUMBER 1310A24121-0-MTR	REV A01
CHANGE by Chou, Leo	1-Dec-2010	SHEET 29 OF 58	

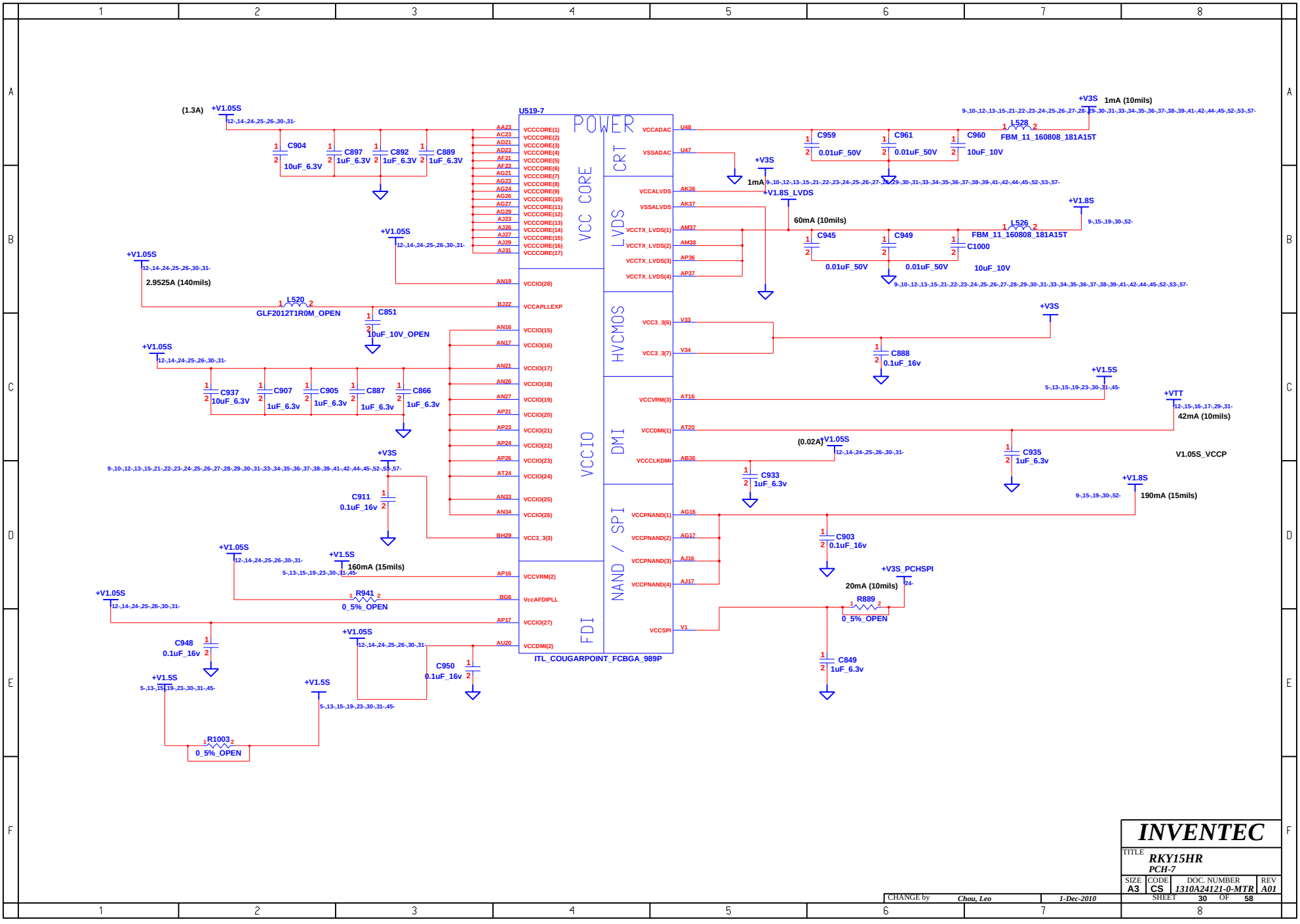

INVENTEC			
TITLE RKY15HR PCH-7			
SIZE A3	CODE CS	DOC. NUMBER 1310A24121-0-MTR	REV A01
CHANGE by Chou, Leo	1-Dec-2010	SHEET 30 OF 58	

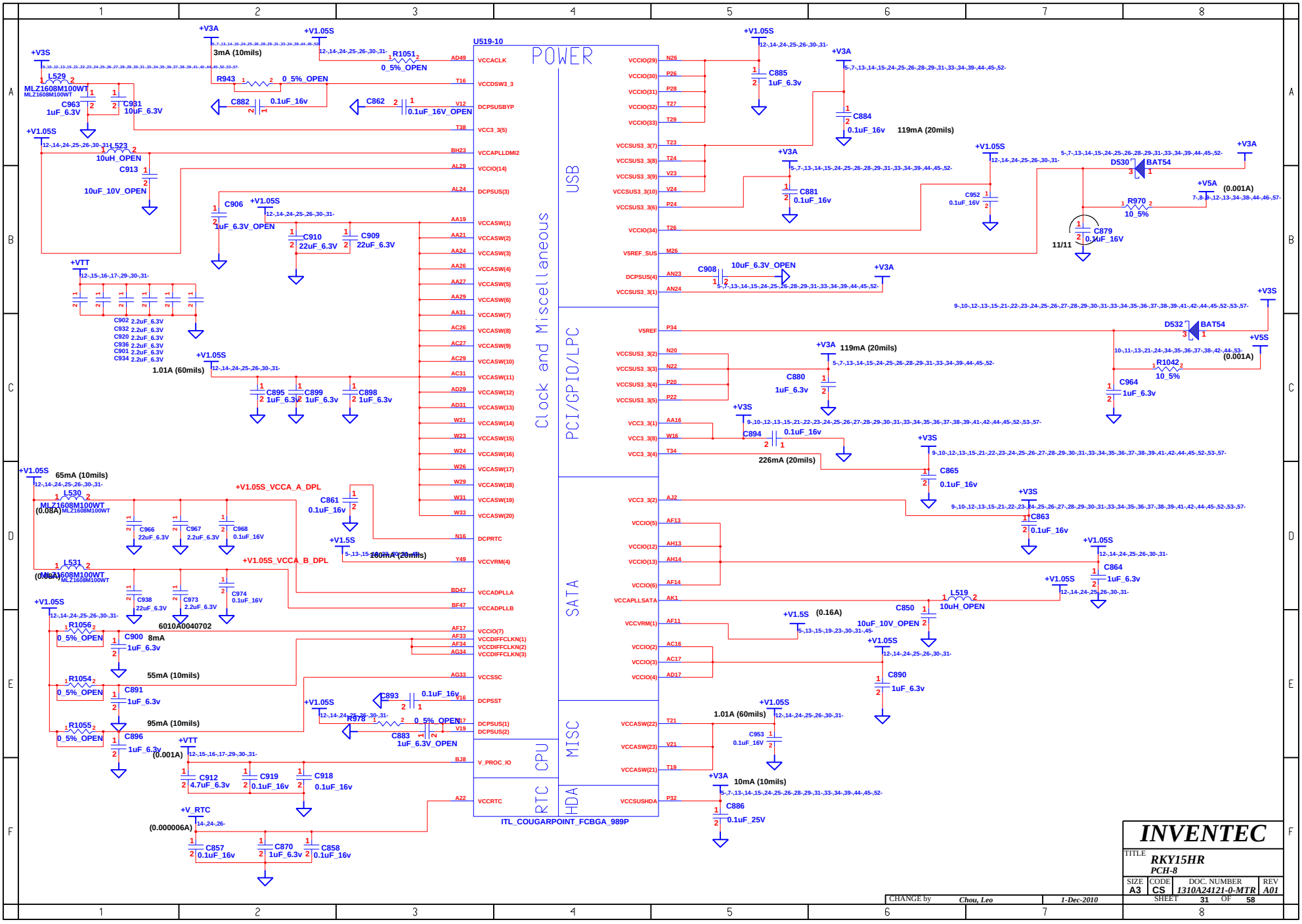

CHANGE by	Chou, Leo	1-Dec-2010	

INVENTEC

TITLE: RKY15HR
PCH-8

SIZE	CODE	DOC. NUMBER	REV
A3	CS	1310A24121-0-MTR	A01

SHEET 31 OF 58

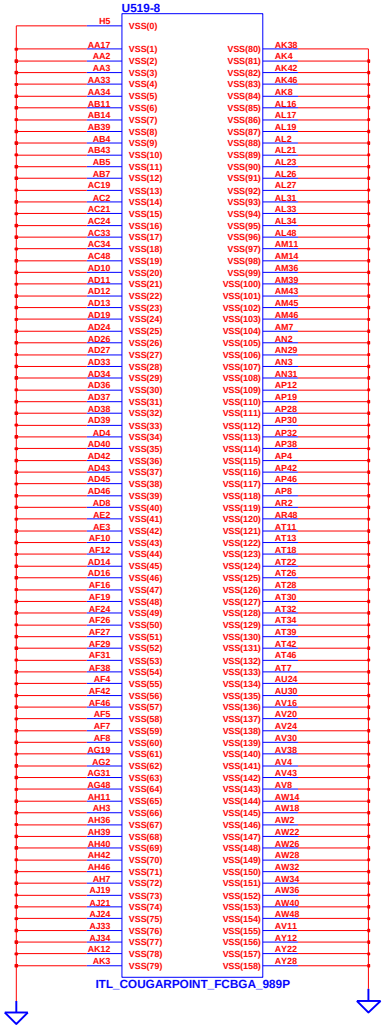

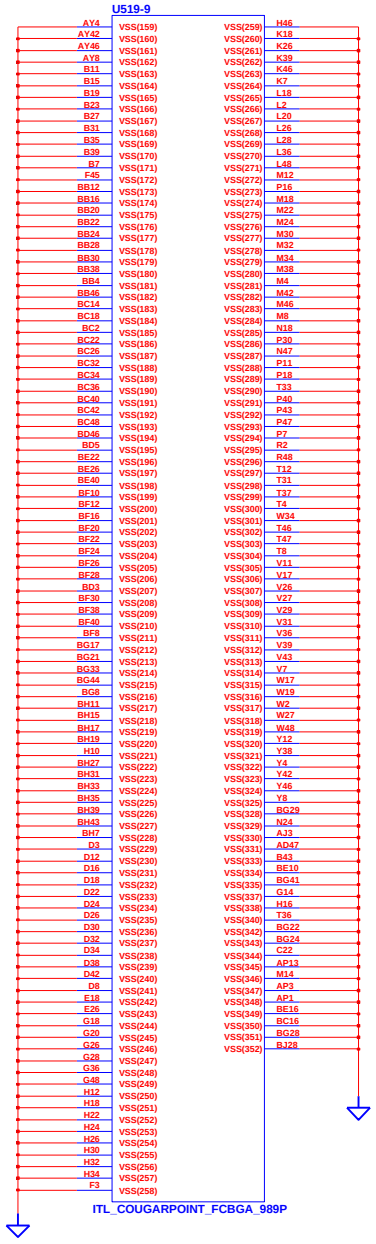

CHANGE by	Chou, Leo	1-Dec-2010	

INVENTEC

TITLE *RKY15HR*
PCH-9

SIZE	CODE	DOC. NUMBER	REV
A3	CS	1310A24121-0-MTR	A01

SHEET 32 OF 58

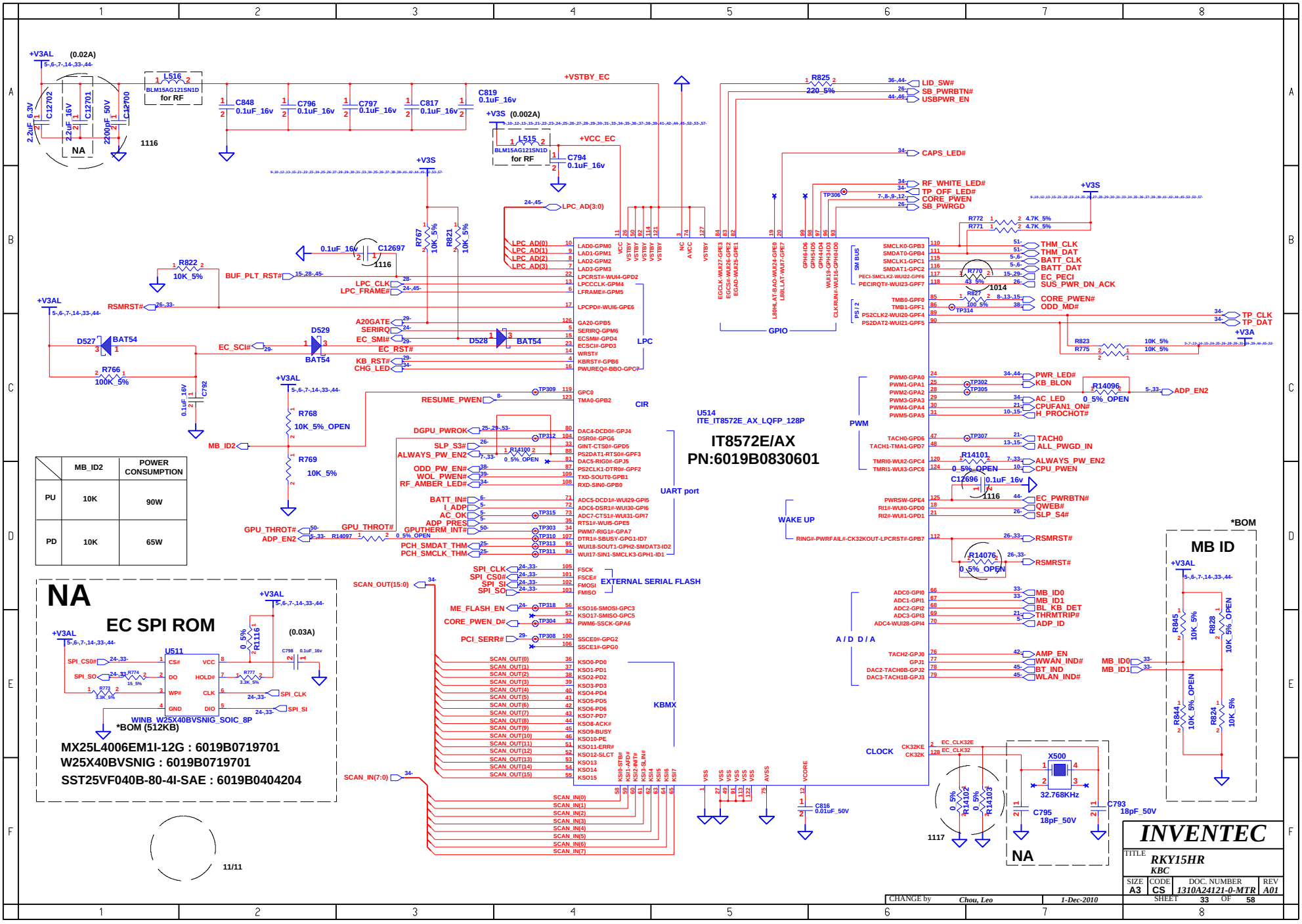

	MB_ID2	POWER CONSUMPTION
PU	10K	90W
PD	10K	65W

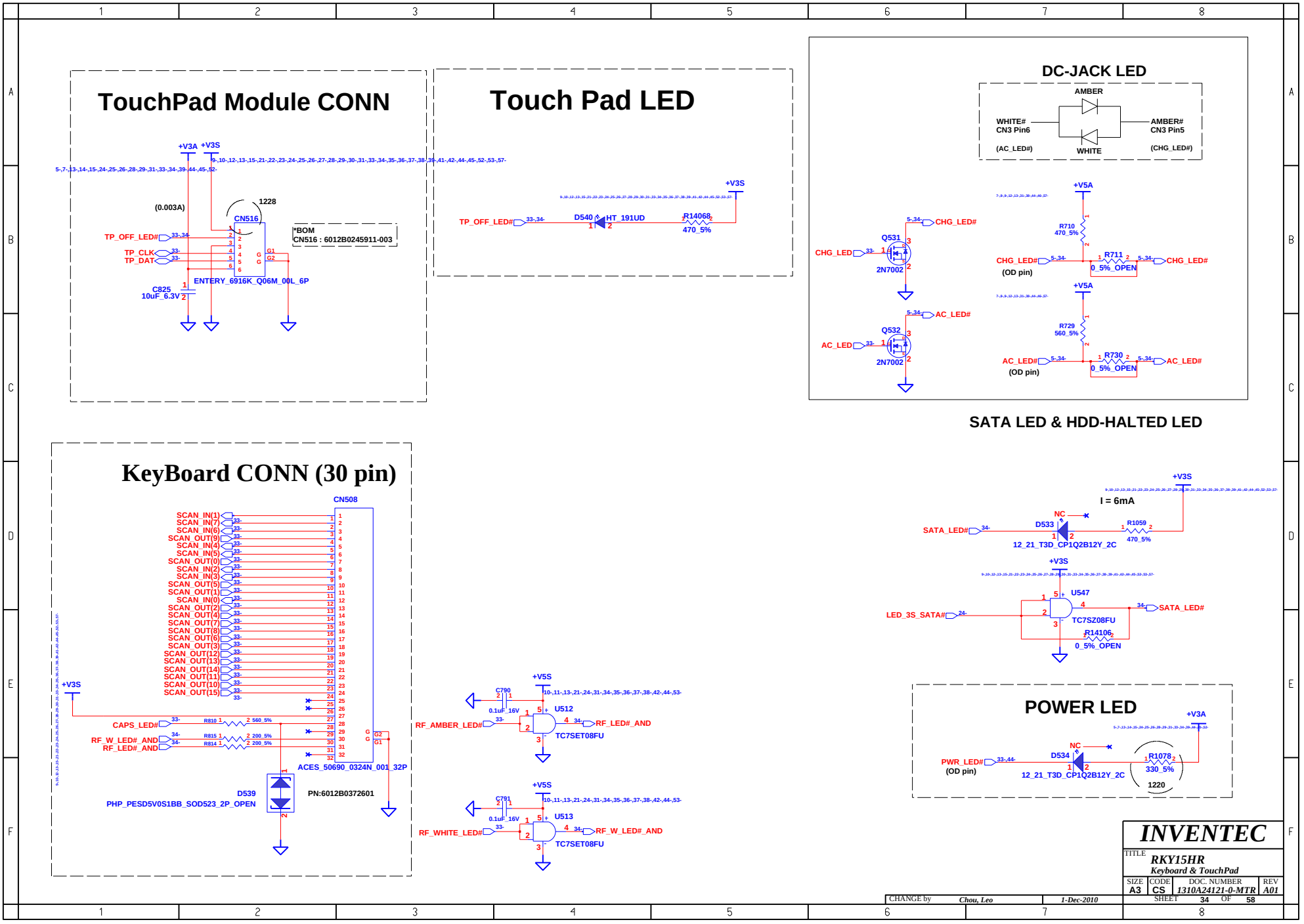
TouchPad Module CONN
+V3A
+V3S
(0.003A)
1228
CN516
*BOM
CN516 : 6012B0245911-003
TP_OFF_LED#
TP_CLK
TP_DAT
ENTERY_6916K_Q06M_00L_6P
C825
10uF_6.3V
Touch Pad LED
+V3S
TP_OFF_LED#
D540
HT_191UD
R14068
470_5%
DC-JACK LED
AMBER
WHITE#
CN3 Pin6
(AC_LED#)
WHITE
AMBER#
CN3 Pin5
(CHG_LED#)
+V5A
CHG_LED#
CHG_LED
Q531
2N7002
R710
470_5%
R711
0_5%_OPEN
(OD pin)
AC_LED#
AC_LED
Q532
R729
560_5%
R730
0_5%_OPEN
SATA LED & HDD-HALTED LED
KeyBoard CONN (30 pin)
CN508
SCAN_IN(1)
SCAN_IN(7)
SCAN_IN(6)
SCAN_OUT(9)
SCAN_IN(4)
SCAN_IN(5)
SCAN_OUT(0)
SCAN_IN(2)
SCAN_IN(3)
SCAN_OUT(5)
SCAN_OUT(1)
SCAN_IN(0)
SCAN_OUT(2)
SCAN_OUT(4)
SCAN_OUT(7)
SCAN_OUT(8)
SCAN_OUT(6)
SCAN_OUT(3)
SCAN_OUT(12)
SCAN_OUT(13)
SCAN_OUT(14)
SCAN_OUT(11)
SCAN_OUT(10)
SCAN_OUT(15)
CAPS_LED#
RF_W_LED#_AND
RF_LED#_AND
R810
R815
R814
560_5%
200_5%
ACES_50690_0324N_001_32P
D539
PHP_PESD5V0S1BB_SOD523_2P_OPEN
PN:6012B0372601
+V5S
C790
0.1uF_16V
U512
RF_AMBER_LED#
RF_LED#_AND
TC7SET08FU
C791
U513
RF_WHITE_LED#
RF_W_LED#_AND
I = 6mA
SATA_LED#
D533
12_21_T3D_CP1Q2B12Y_2C
R1059
470_5%
U547
LED_3S_SATA#
TC7SZ08FU
R14106
0_5%_OPEN
POWER LED
+V3A
PWR_LED#
(OD pin)
D534
R1078
330_5%
1220
INVENTEC
TITLE
RKY15HR
Keyboard & TouchPad
SIZE A3
CODE CS
DOC. NUMBER 1310A24121-0-MTR
REV A01
SHEET 34 OF 58
CHANGE by Chou, Leo
1-Dec-2010

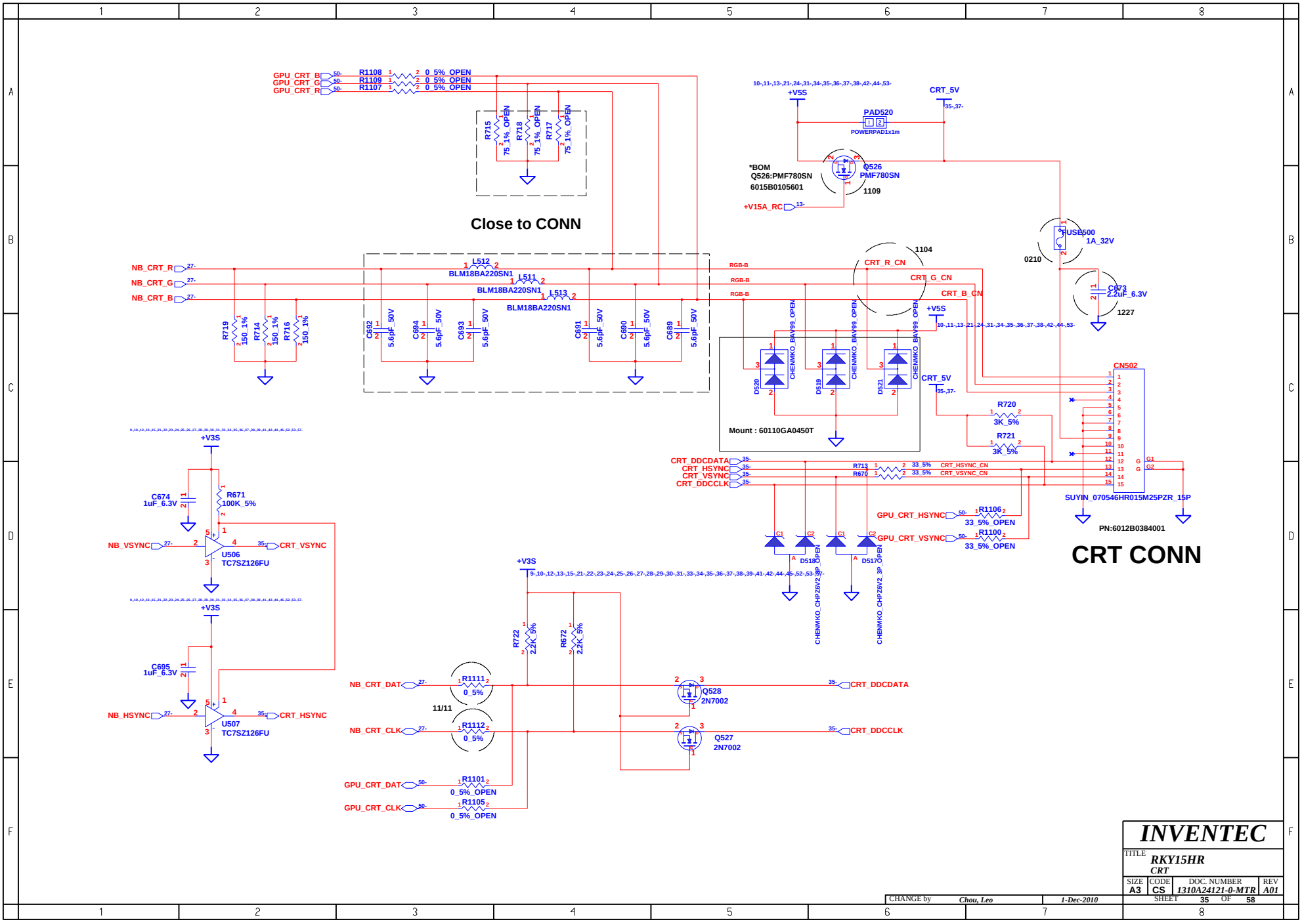
GPU_CRT_B
GPU_CRT_G
GPU_CRT_R
R1108 0_5% OPEN
R1109 0_5% OPEN
R1107 0_5% OPEN
R715 75_1% OPEN
R718 75_1% OPEN
R717 75_1% OPEN
Close to CONN
+V5S
CRT_5V
PAD520
POWERPAD1x1m
*BOM
Q526:PMF780SN
6015B0105601
Q526
PMF780SN
1109
+V15A_RC
FUSE500
1A_32V
0210
C673
2.2uF_6.3V
1227
1104
NB_CRT_R
NB_CRT_G
NB_CRT_B
L512
BLM18BA220SN1
L511
BLM18BA220SN1
L513
BLM18BA220SN1
R719 150_1%
R714 150_1%
R716 150_1%
C692 5.6pF_50V
C694 5.6pF_50V
C693 5.6pF_50V
C691 5.6pF_50V
C690 5.6pF_50V
C689 5.6pF_50V
RGB-B
CRT_R_CN
CRT_G_CN
CRT_B_CN
D520 CHENMKO_BAV99_OPEN
D519 CHENMKO_BAV99_OPEN
D521 CHENMKO_BAV99_OPEN
Mount : 60110GA0450T
R720 3K_5%
R721 3K_5%
CN502
SUYIN_070546HR015M25PZR_15P
PN:6012B0384001
CRT CONN
CRT_DDCDATA
CRT_HSYNC
CRT_VSYNC
CRT_DDCCLK
R713 33_5%
R670 33_5%
CRT_HSYNC_CN
CRT_VSYNC_CN
GPU_CRT_HSYNC
GPU_CRT_VSYNC
R1106 33_5%_OPEN
R1100 33_5%_OPEN
D518 CHENMKO_CHP26V2_3P_OPEN
D517 CHENMKO_CHP26V2_3P_OPEN
+V3S
C674 1uF_6.3V
R671 100K_5%
NB_VSYNC
U506 TC7SZ126FU
CRT_VSYNC
C695 1uF_6.3V
NB_HSYNC
U507 TC7SZ126FU
CRT_HSYNC
R722 2.2K_5%
R672 2.2K_5%
NB_CRT_DAT
R1111 0_5%
11/11
NB_CRT_CLK
R1112 0_5%
Q528 2N7002
Q527 2N7002
CRT_DDCDATA
CRT_DDCCLK
GPU_CRT_DAT
R1101 0_5%_OPEN
GPU_CRT_CLK
R1105 0_5%_OPEN
INVENTEC
TITLE
RKY15HR
CRT
SIZE A3
CODE CS
DOC. NUMBER 1310A24121-0-MTR
REV A01
SHEET 35 OF 58
CHANGE by Chou, Leo
1-Dec-2010

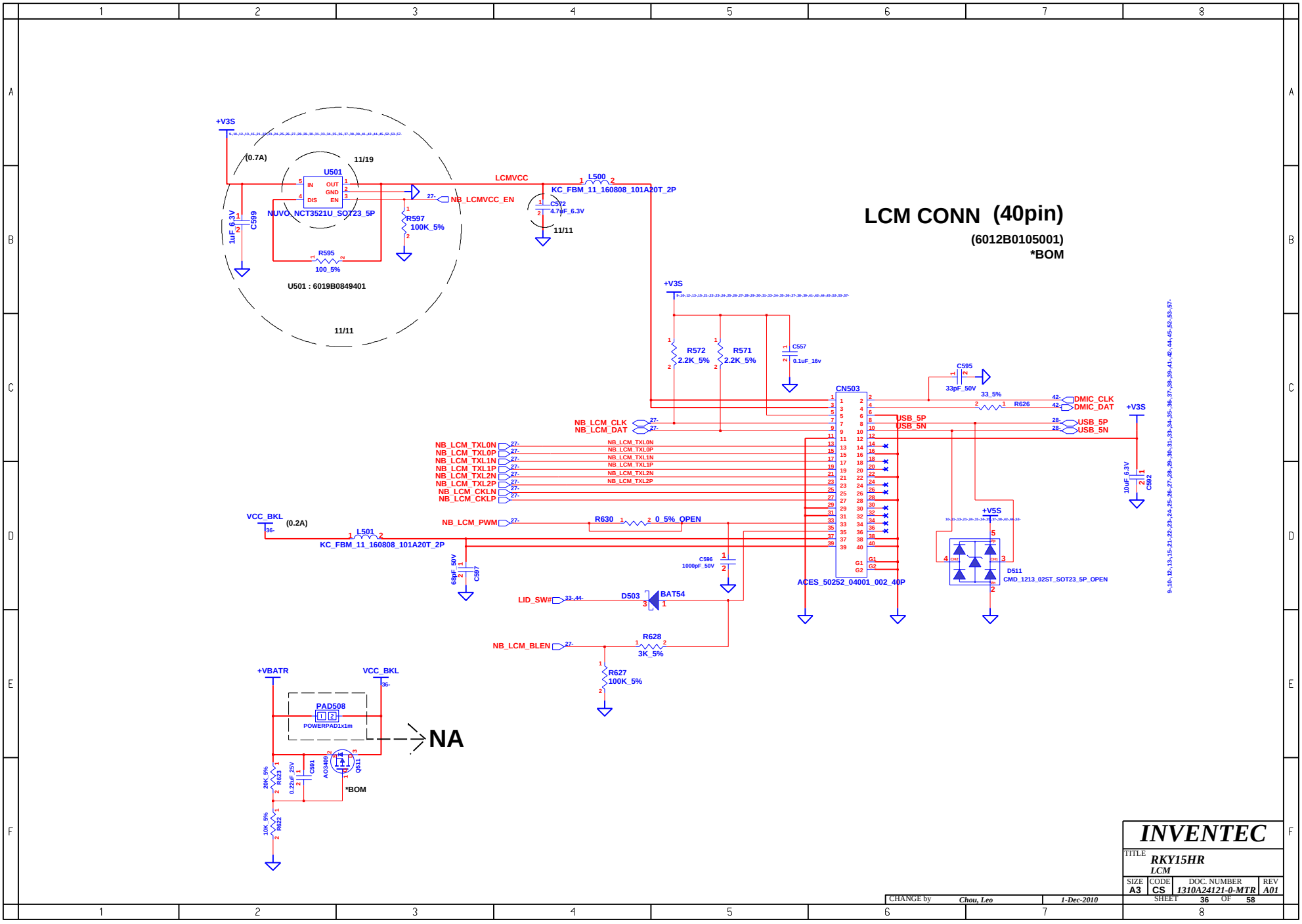
LCM CONN (40pin)
(6012B0105001)
*BOM
+V3S
(0.7A)
11/19
U501
IN
OUT
GND
DIS
EN
NUVO_NCT3521U_SOT23_5P
C599
1uF_6.3V
R597
100K_5%
R595
100_5%
U501 : 6019B0849401
11/11
LCMVCC
L500
KC_FBM_11_160808_101A20T_2P
C572
4.7uF_6.3V
NB_LCMVCC_EN
R572
2.2K_5%
R571
2.2K_5%
C557
0.1uF_16v
CN503
ACES_50252_04001_002_40P
C595
33pF_50V
33_5%
R626
DMIC_CLK
DMIC_DAT
USB_5P
USB_5N
NB_LCM_CLK
NB_LCM_DAT
NB_LCM_TXL0N
NB_LCM_TXL0P
NB_LCM_TXL1N
NB_LCM_TXL1P
NB_LCM_TXL2N
NB_LCM_TXL2P
NB_LCM_CKLN
NB_LCM_CKLP
NB_LCM_PWM
R630
0_5%_OPEN
VCC_BKL
(0.2A)
L501
KC_FBM_11_160808_101A20T_2P
68pF_50V
C597
C596
1000pF_50V
LID_SW#
D503
BAT54
NB_LCM_BLEN
R628
3K_5%
R627
100K_5%
+V5S
D511
CMD_1213_02ST_SOT23_5P_OPEN
10uF_6.3V
C592
+VBATR
PAD508
POWERPAD1x1m
NA
20K_5%
R623
0.22uF_25V
C591
AO3400
Q511
*BOM
10K_5%
R622
INVENTEC
TITLE
RKY15HR
LCM
SIZE A3
CODE CS
DOC. NUMBER 1310A24121-0-MTR
REV A01
SHEET 36 OF 58
CHANGE by Chou, Leo
1-Dec-2010

HDMI CONN

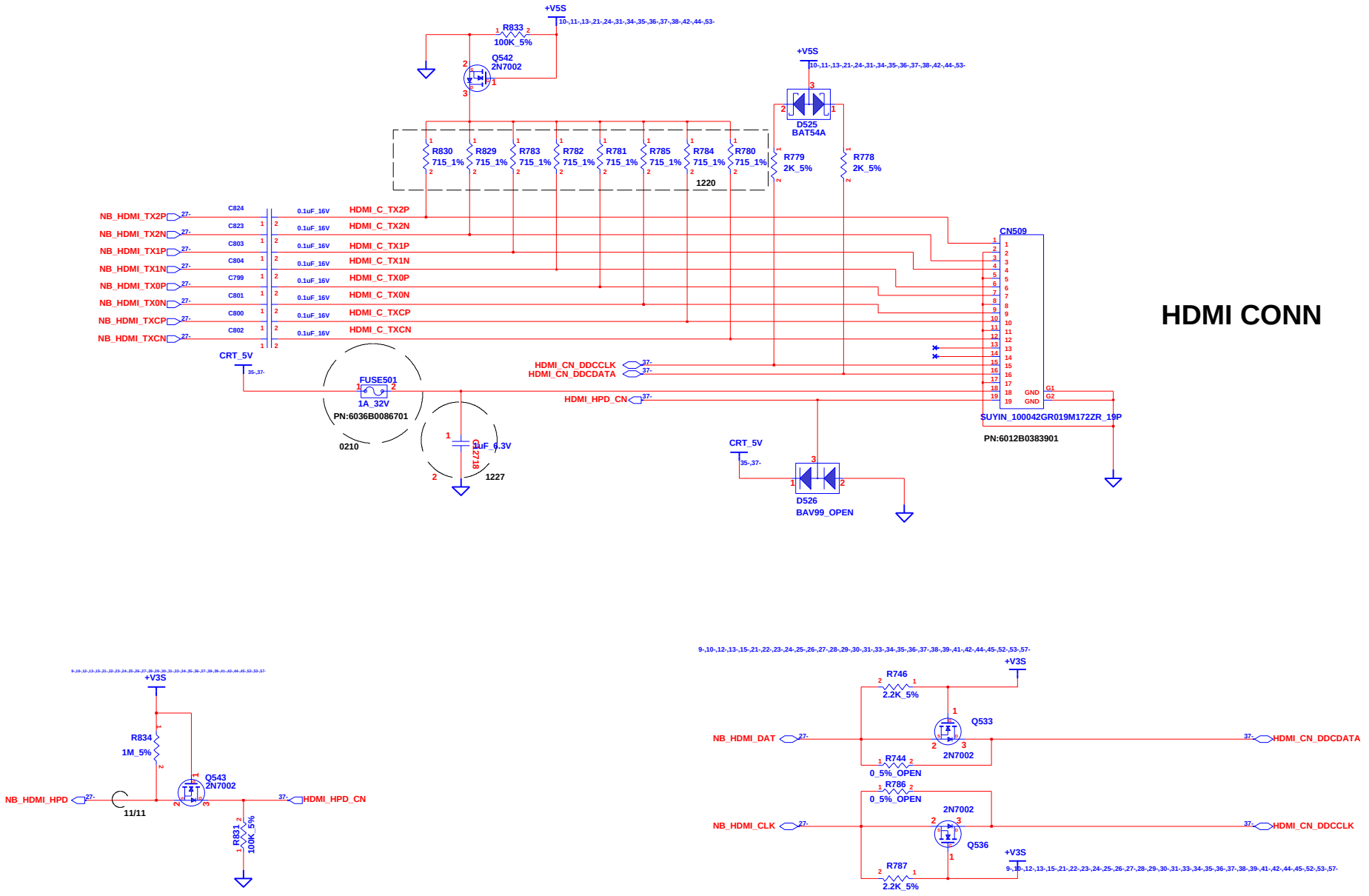

INVENTEC			
TITLE: RKY15HR HDMI Level-Shift			
SIZE: A3	CODE: CS	DOC. NUMBER: 1310A24121-0-MTR	REV: A01
CHANGE by: Chou, Leo	1-Dec-2010	SHEET 37 OF 58	

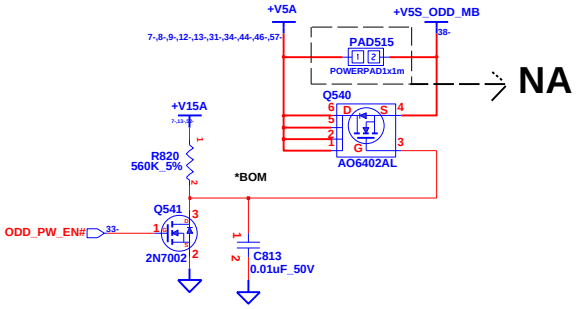

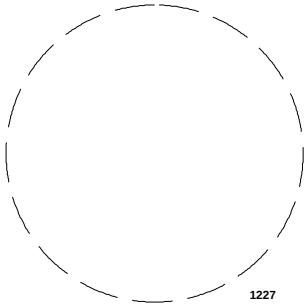

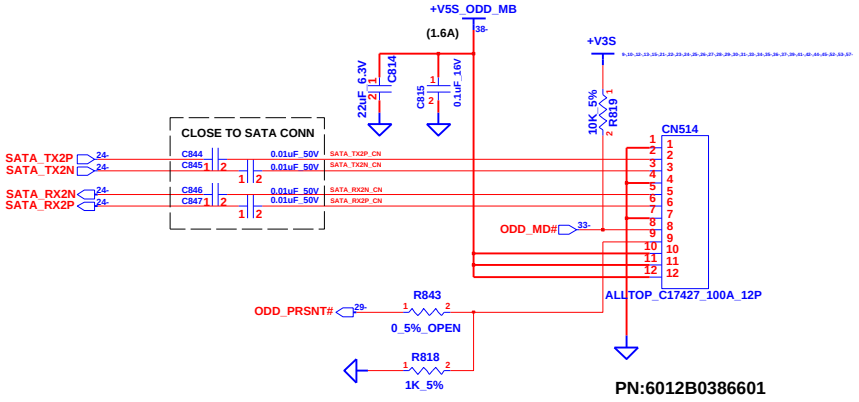

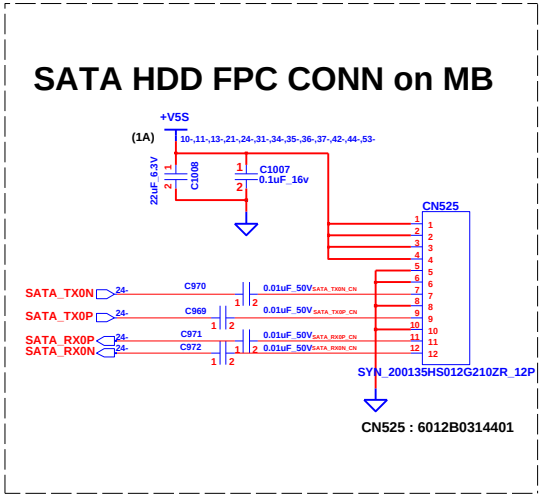

INVENTEC

TITLE
RKY15HR
SATA HDD & ODD

SIZE	CODE	DOC. NUMBER	REV
A3	CS	*1310A24121-0-MTR*	*A01*

SHEET 38 OF 58

CHANGE by *Chou, Leo* *1-Dec-2010*

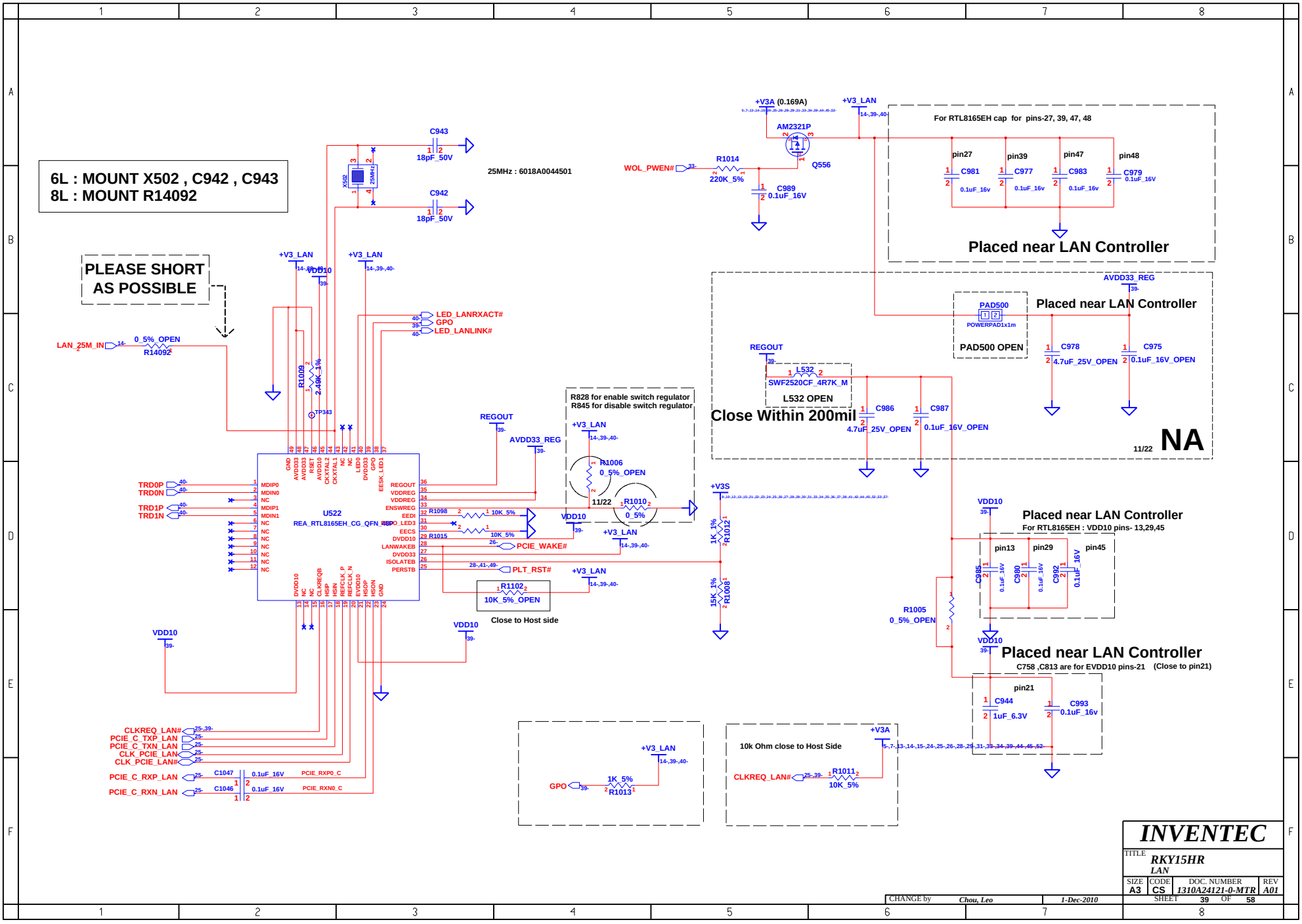
6L : MOUNT X502 , C942 , C943
8L : MOUNT R14092
PLEASE SHORT AS POSSIBLE
25MHz : 6018A0044501
C943
18pF_50V
C942
18pF_50V
X502
25MHz
+V3_LAN
VDD10
LAN_25M_IN
0_5%_OPEN
R14092
R1009
2.49K_1%
TP343
LED_LANRXACT#
GPO
LED_LANLINK#
REGOUT
AVDD33_REG
R828 for enable switch regulator
R845 for disable switch regulator
R1006
0_5%_OPEN
11/22
R1010
0_5%
TRD0P
TRD0N
TRD1P
TRD1N
U522
REA_RTL8165EH_CG_QFN_48P
R1098
10K_5%
R1015
PCIE_WAKE#
PLT_RST#
R1102
10K_5%_OPEN
Close to Host side
CLKREQ_LAN#
PCIE_C_TXP_LAN
PCIE_C_TXN_LAN
CLK_PCIE_LAN
CLK_PCIE_LAN#
PCIE_C_RXP_LAN
PCIE_C_RXN_LAN
C1047
C1046
0.1uF_16V
PCIE_RXP0_C
PCIE_RXN0_C
+V3A (0.169A)
AM2321P
Q556
WOL_PWEN#
R1014
220K_5%
C989
0.1uF_16V
For RTL8165EH cap for pins-27, 39, 47, 48
pin27
pin39
pin47
pin48
C981
C977
C983
C979
0.1uF_16v
Placed near LAN Controller
PAD500
POWERPAD1x1m
PAD500 OPEN
C978
4.7uF_25V_OPEN
C975
0.1uF_16V_OPEN
L532
SWF2520CF_4R7K_M
L532 OPEN
C986
C987
Close Within 200mil
NA
+V3S
1K_1%
R1012
15K_1%
R1008
R1005
0_5%_OPEN
For RTL8165EH : VDD10 pins- 13,29,45
pin13
pin29
pin45
C985
C980
C982
C758 ,C813 are for EVDD10 pins-21
(Close to pin21)
pin21
C944
1uF_6.3V
C993
0.1uF_16v
GPO
1K_5%
R1013
10k Ohm close to Host Side
R1011
10K_5%
INVENTEC
TITLE
RKY15HR
LAN
SIZE A3
CODE CS
DOC. NUMBER 1310A24121-0-MTR
REV A01
SHEET 39 OF 58
CHANGE by Chou, Leo
1-Dec-2010

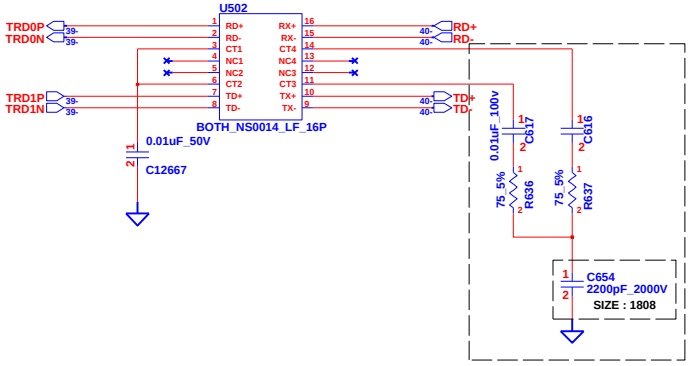

Reserved for surge Protection

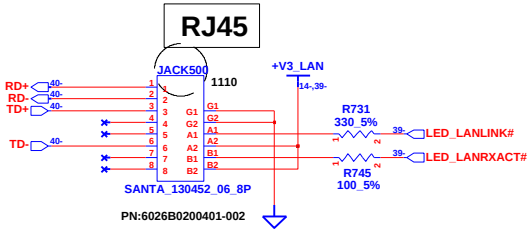

LAYOUT NOTE : Place termination resistors and caps as close to LAN controller as possible

CHANGE by	Chou, Leo	1-Dec-2010	

INVENTEC

TITLE *RKY15HR*
RJ-45

SIZE	CODE	DOC. NUMBER	REV
A3	CS	1310A24121-0-MTR	A01

SHEET 40 OF 58

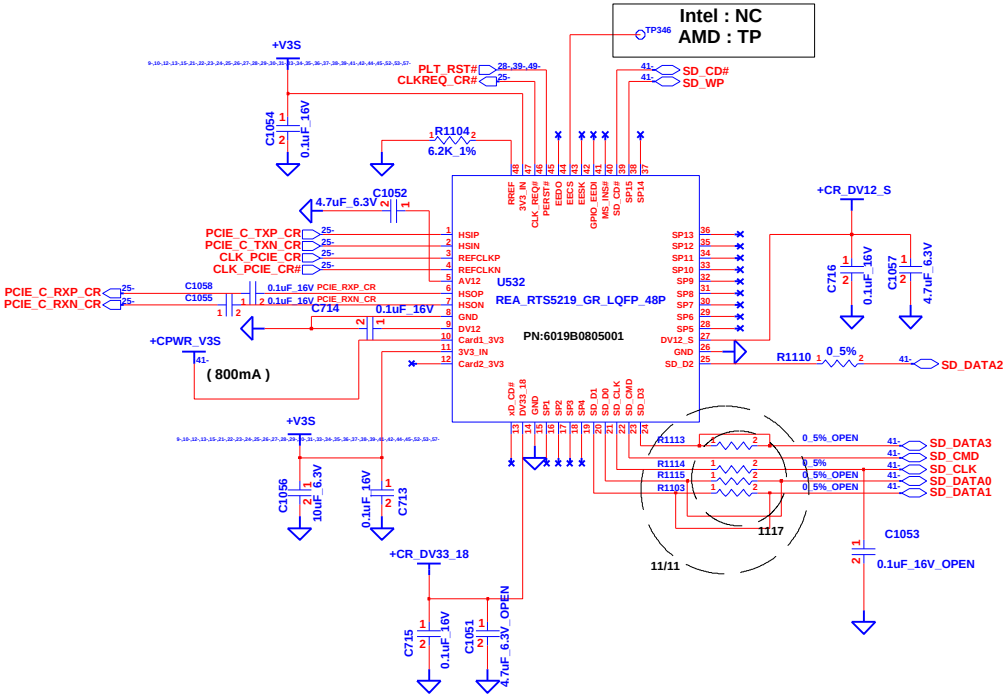

Card Reader CONN

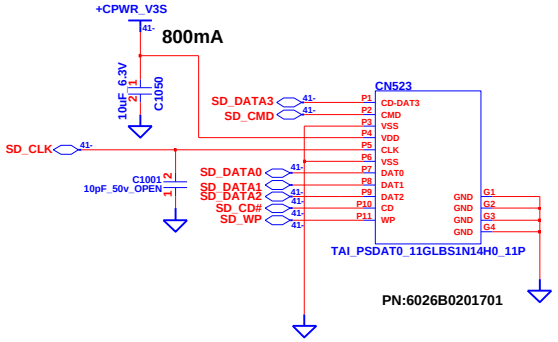

CHANGE by	Chou, Leo	1-Dec-2010	

INVENTEC

TITLE: *RKY15HR*
Card Reader

SIZE	CODE	DOC. NUMBER	REV
A3	CS	1310A24121-0-MTR	A01

SHEET 41 OF 58

*BOM

6019B0824101

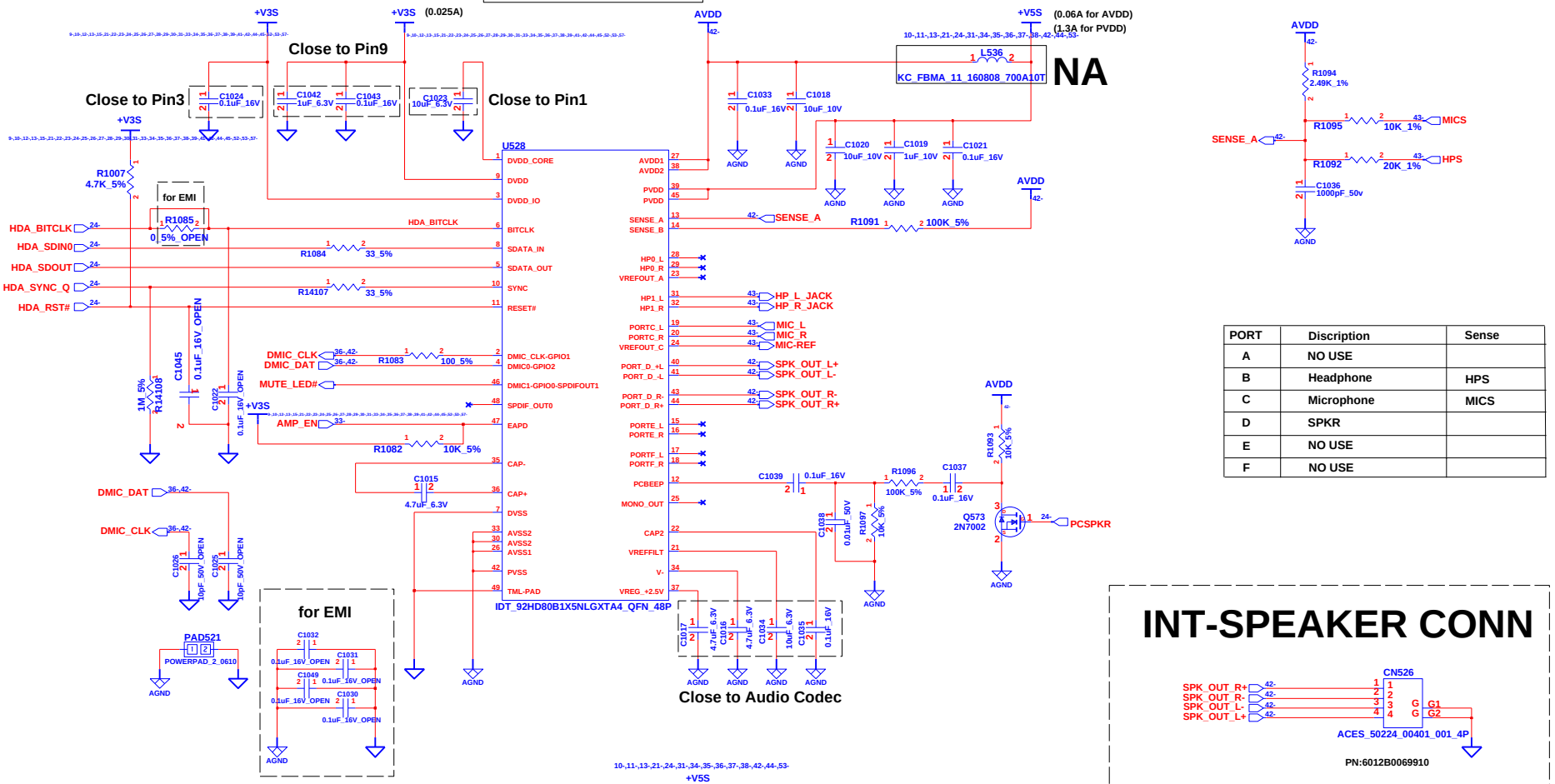

PORT	Discription	Sense
A	NO USE	
B	Headphone	HPS
C	Microphone	MICS
D	SPKR	
E	NO USE	
F	NO USE	

INT-SPEAKER CONN

PN:6012B0069910

CHANGE by	Chou, Leo	1-Dec-2010	

INVENTEC

TITLE: *RKY15HR* — *Audio Codec*

SIZE	CODE	DOC. NUMBER	REV
A3	CS	1310A24121-0-MTR	A01

SHEET 42 OF 58

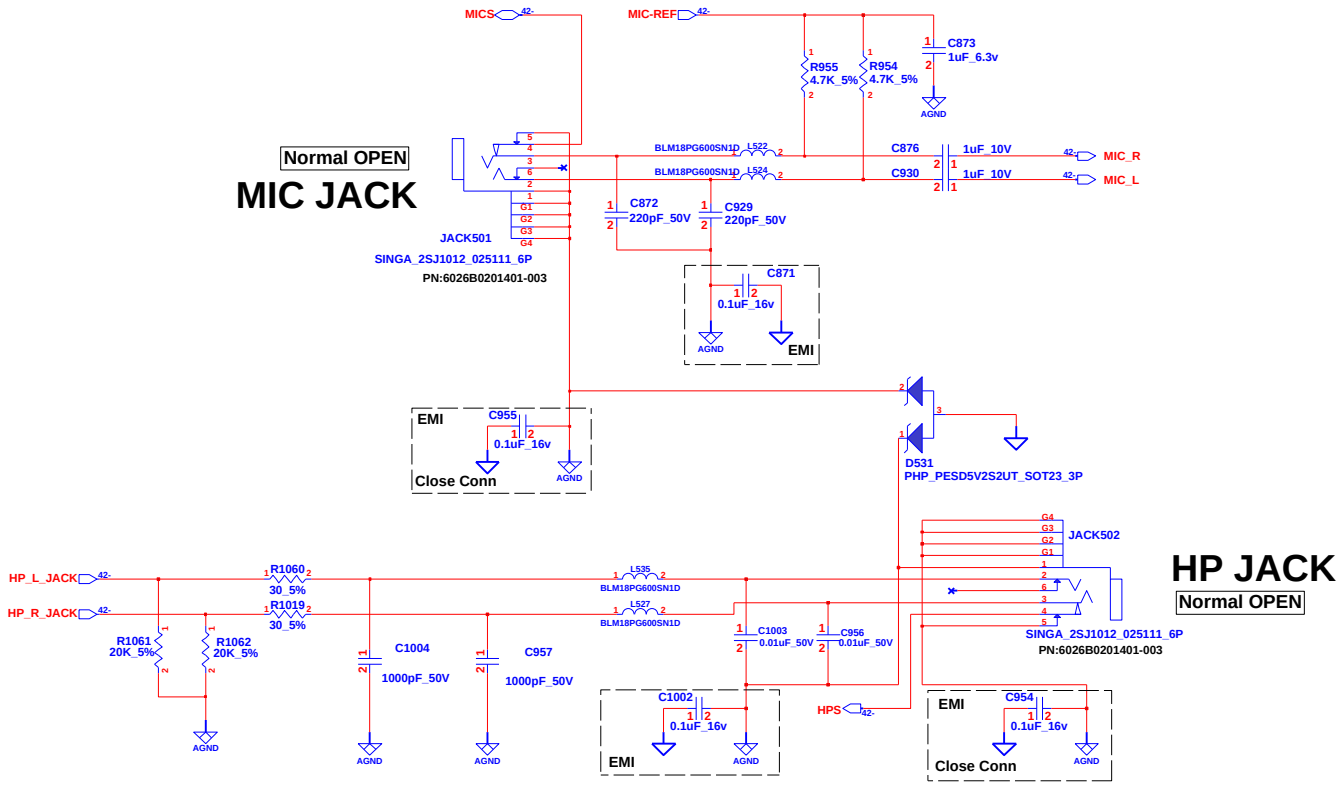

INVENTEC			
TITLE RKY15HR HP JACK & MIC JACK			
SIZE A3	CODE CS	DOC. NUMBER 1310A24121-0-MTR	REV A01
CHANGE by Chou, Leo	1-Dec-2010	SHEET 43 OF 58	

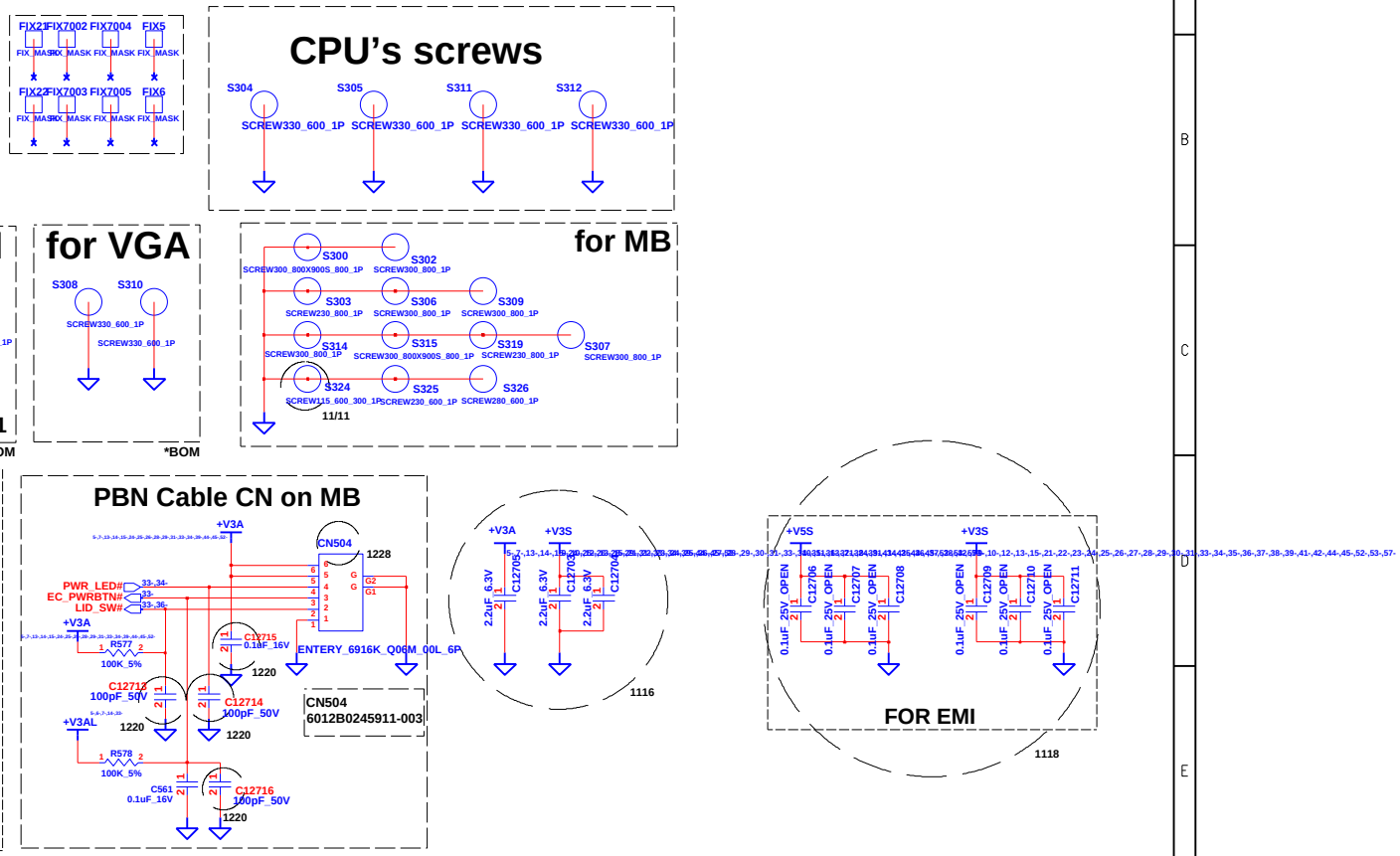

CHANGE by	Chou, Leo	1-Dec-2010	

INVENTEC

TITLE: RKY15HR
SCREW & CONN

SIZE	CODE	DOC. NUMBER	REV
A3	CS	1310A24121-0-MTR	A01

SHEET 44 OF 58

BLUETOOTH CONN

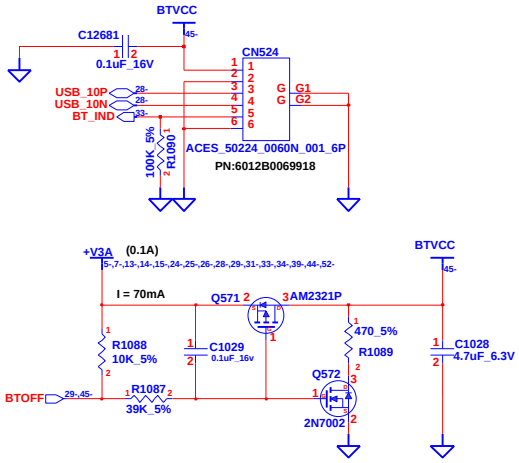

WLAN CONN (MINICARD)

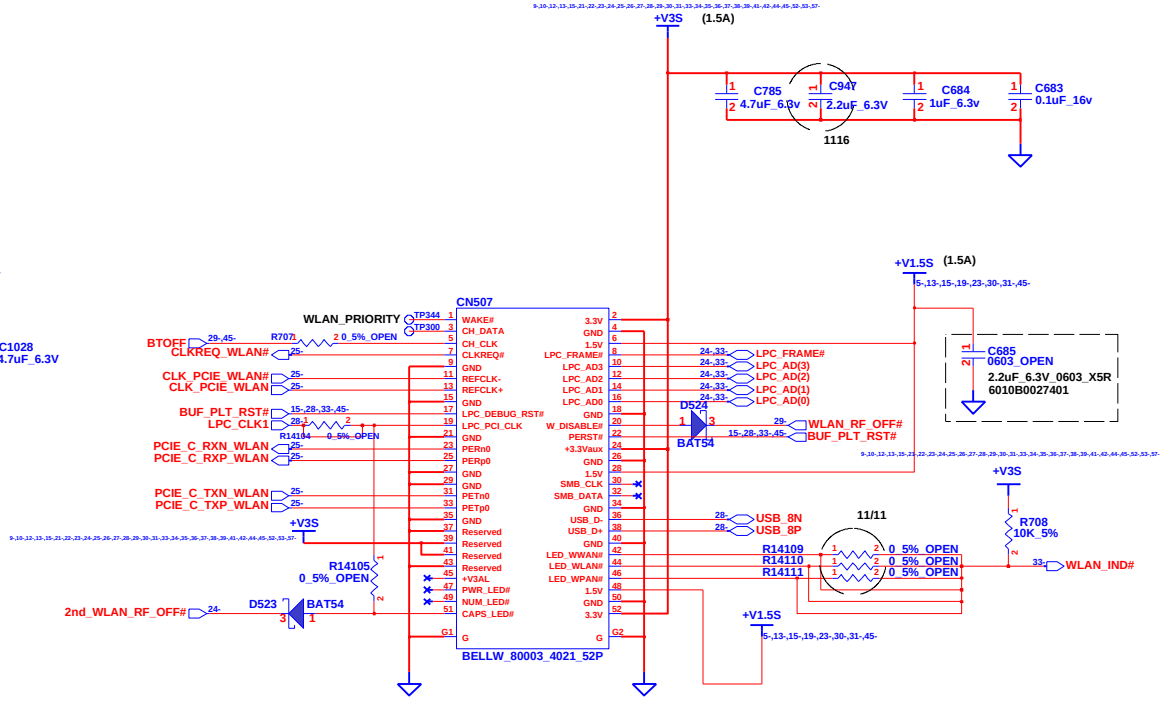

*BOM
CN507 : 6026B0140704

INVENTEC			
TITLE RKY15HR WLAN, BT & WebCAM			
SIZE A3	CODE CS	DOC. NUMBER 1310A24121-0-MTR	REV A01
CHANGE by Chou, Leo	1-Dec-2010	SHEET 45 OF 58	

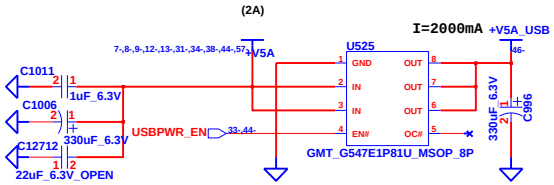

USB CONN01

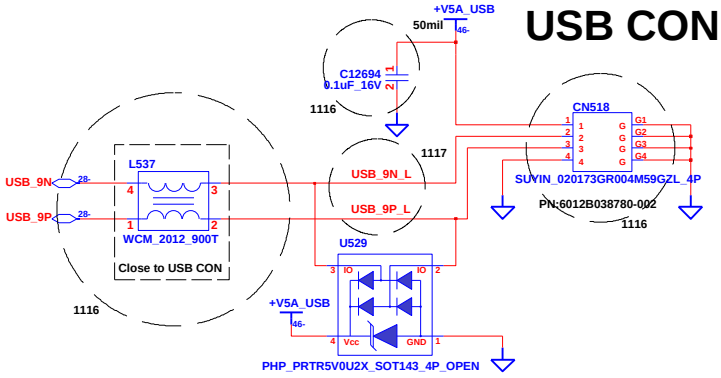

USB CONN02

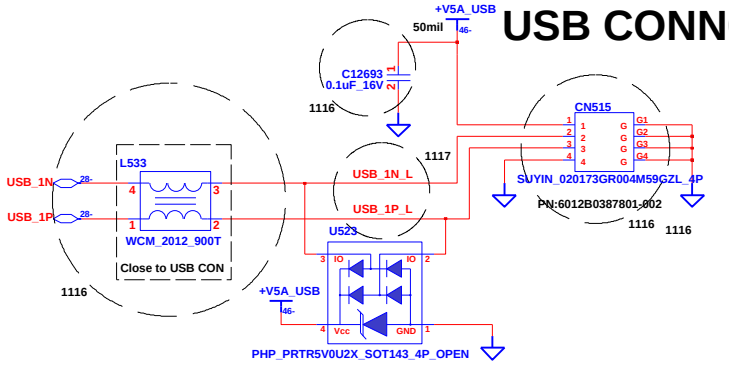

INVENTEC			
TITLE RKY15HR USB CONN			
SIZE A3	CODE CS	DOC. NUMBER 1310A24121-0-MTR	REV A01
CHANGE by Chou, Leo	1-Dec-2010	SHEET 46 OF 58	

POWER BOTTON BOARD

POWER LED

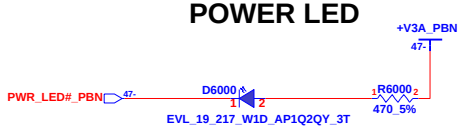

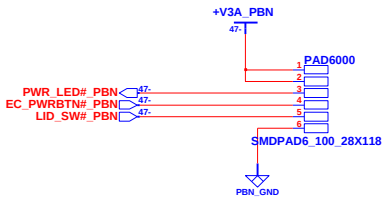

POWER BUTTON

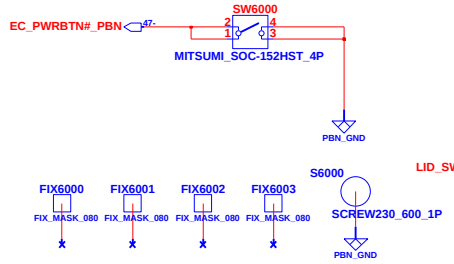

LID SWITCH

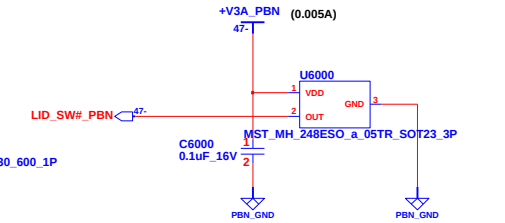

USB BOARD

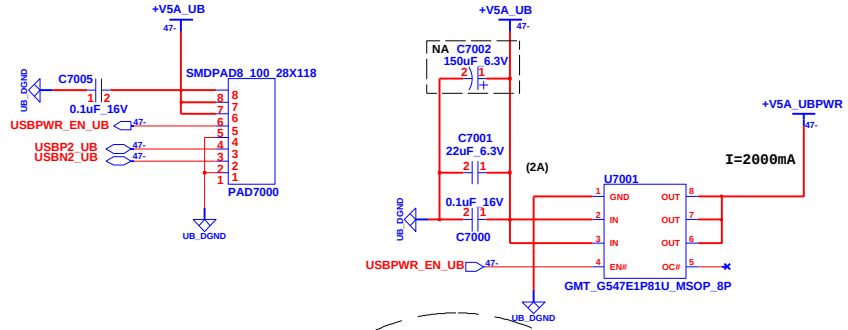

USB CONN03

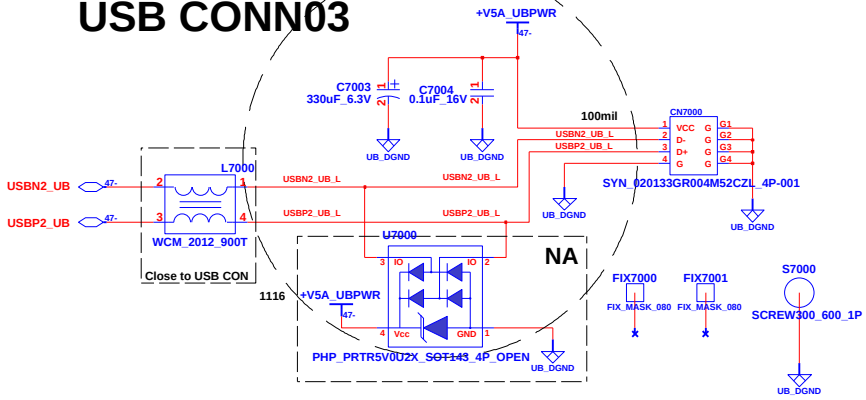

PICK BUTTON BOARD

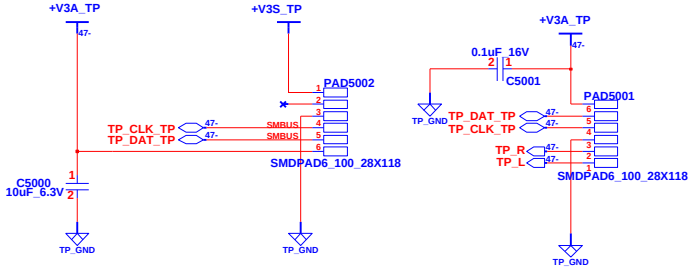

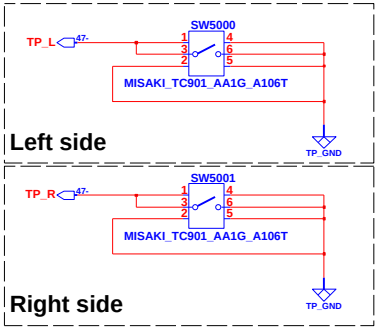

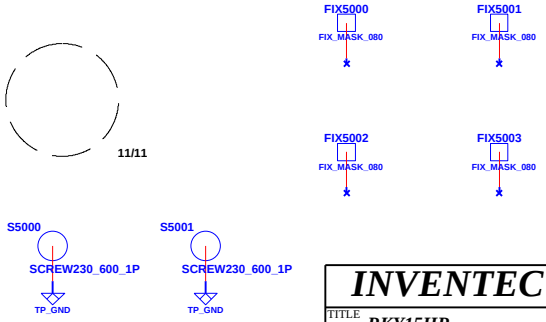

CHANGE by	Chou, Leo	1-Dec-2010	

INVENTEC

TITLE: RKY15HR
USB, PowerButton (DB)

SIZE	CODE	DOC. NUMBER	REV
A3	CS	1310A24121-0-MTR	A01

SHEET 47 OF 58

SATA HDD BOARD

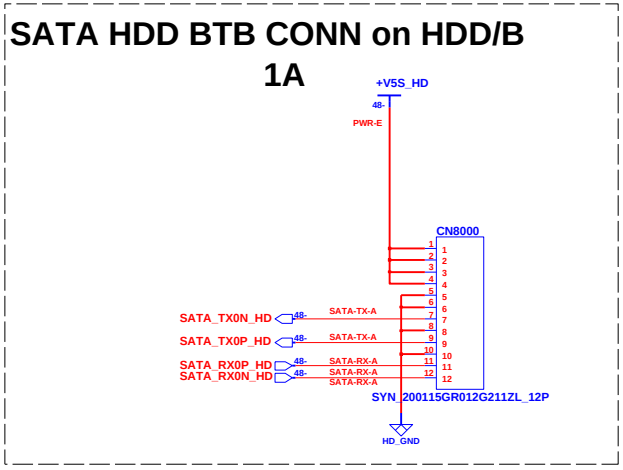

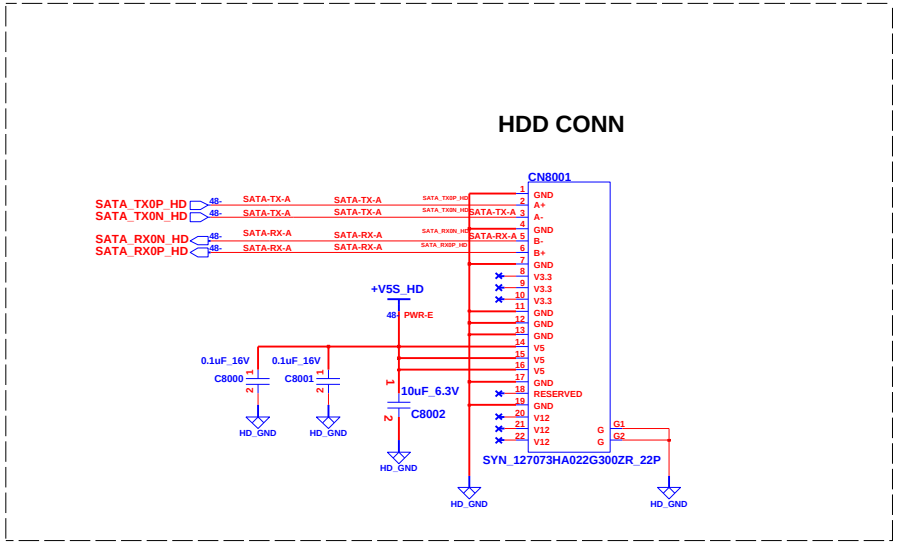

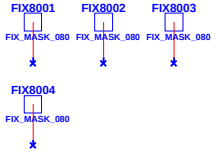

CHANGE by	Chou, Leo	1-Dec-2010	

INVENTEC

TITLE: *RKY15HR*
HDD CONN

SIZE	CODE	DOC. NUMBER	REV
A3	CS	1310A24121-0-MTR	A01

SHEET 48 OF 58

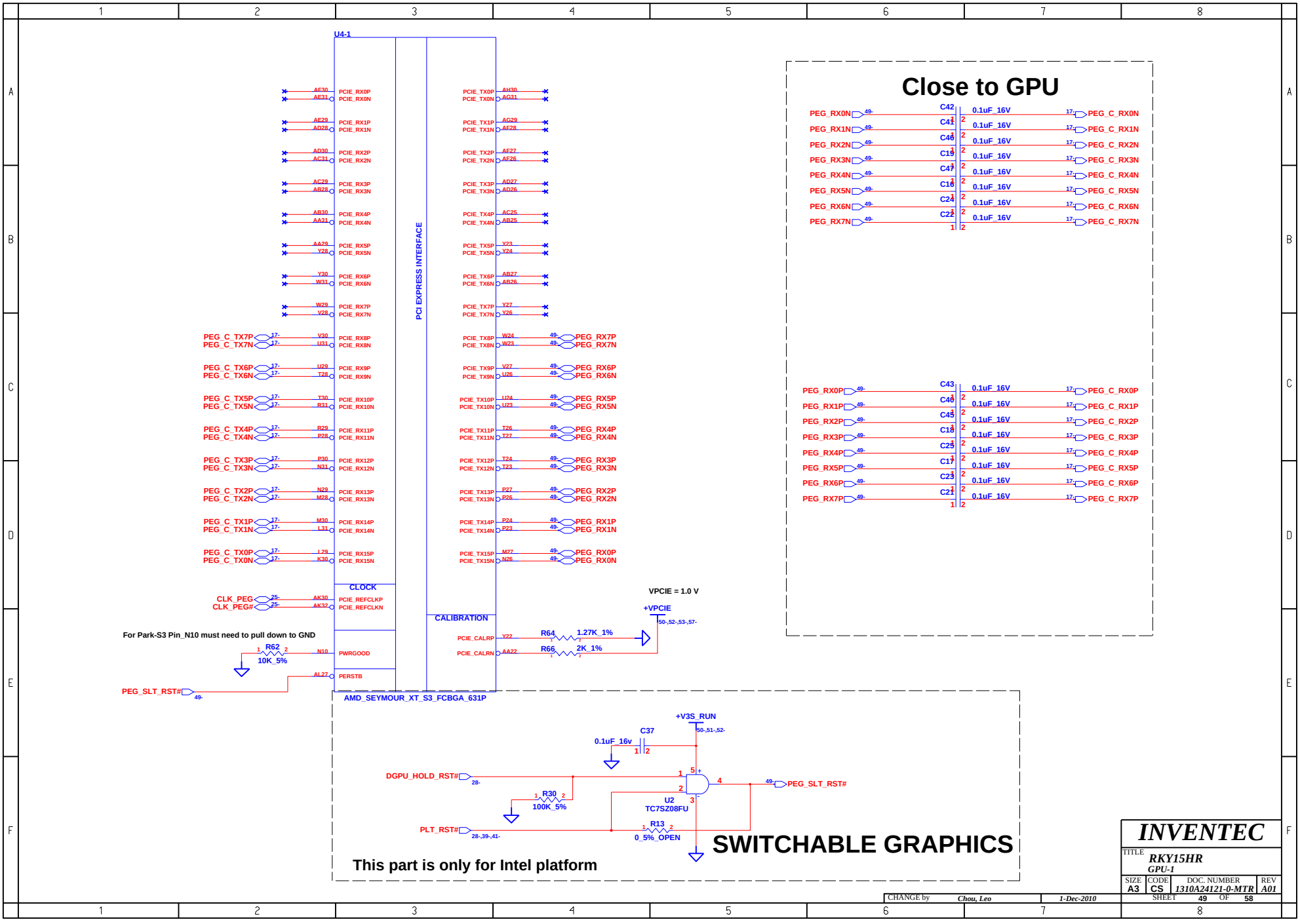
U4-1
PCI EXPRESS INTERFACE
CLOCK
CALIBRATION
AMD_SEYMOUR_XT_S3_FCBGA_631P
PCIE_RX0P AF30
PCIE_RX0N AF31
PCIE_RX1P AF29
PCIE_RX1N AD28
PCIE_RX2P AD30
PCIE_RX2N AC31
PCIE_RX3P AC29
PCIE_RX3N AB28
PCIE_RX4P AB30
PCIE_RX4N AA31
PCIE_RX5P AA29
PCIE_RX5N Y28
PCIE_RX6P Y30
PCIE_RX6N W31
PCIE_RX7P W29
PCIE_RX7N V28
PCIE_RX8P V30
PCIE_RX8N U31
PCIE_RX9P U29
PCIE_RX9N T28
PCIE_RX10P T30
PCIE_RX10N R31
PCIE_RX11P R29
PCIE_RX11N P28
PCIE_RX12P P30
PCIE_RX12N N31
PCIE_RX13P N29
PCIE_RX13N M28
PCIE_RX14P M30
PCIE_RX14N L31
PCIE_RX15P L29
PCIE_RX15N K30
PCIE_TX0P AH30
PCIE_TX0N AG31
PCIE_TX1P AG29
PCIE_TX1N AF28
PCIE_TX2P AF27
PCIE_TX2N AE26
PCIE_TX3P AD27
PCIE_TX3N AD26
PCIE_TX4P AC25
PCIE_TX4N AB25
PCIE_TX5P Y23
PCIE_TX5N Y24
PCIE_TX6P AB27
PCIE_TX6N AB26
PCIE_TX7P Y27
PCIE_TX7N Y26
PCIE_TX8P W24
PCIE_TX8N W23
PCIE_TX9P V27
PCIE_TX9N U26
PCIE_TX10P U24
PCIE_TX10N U23
PCIE_TX11P T26
PCIE_TX11N T27
PCIE_TX12P T24
PCIE_TX12N T23
PCIE_TX13P P27
PCIE_TX13N P26
PCIE_TX14P P24
PCIE_TX14N P23
PCIE_TX15P M27
PCIE_TX15N N26
PEG_C_TX7P 17-
PEG_C_TX7N 17-
PEG_C_TX6P 17-
PEG_C_TX6N 17-
PEG_C_TX5P 17-
PEG_C_TX5N 17-
PEG_C_TX4P 17-
PEG_C_TX4N 17-
PEG_C_TX3P 17-
PEG_C_TX3N 17-
PEG_C_TX2P 17-
PEG_C_TX2N 17-
PEG_C_TX1P 17-
PEG_C_TX1N 17-
PEG_C_TX0P 17-
PEG_C_TX0N 17-
PEG_RX7P 49-
PEG_RX7N 49-
PEG_RX6P 49-
PEG_RX6N 49-
PEG_RX5P 49-
PEG_RX5N 49-
PEG_RX4P 49-
PEG_RX4N 49-
PEG_RX3P 49-
PEG_RX3N 49-
PEG_RX2P 49-
PEG_RX2N 49-
PEG_RX1P 49-
PEG_RX1N 49-
PEG_RX0P 49-
PEG_RX0N 49-
CLK_PEG 25- AK30 PCIE_REFCLKP
CLK_PEG# 25- AK32 PCIE_REFCLKN
PWRGOOD N10
PERSTB AL27
PEG_SLT_RST# 49-
For Park-S3 Pin_N10 must need to pull down to GND
R62 10K_5%
PCIE_CALRP Y22
PCIE_CALRN AA22
R64 1.27K_1%
R66 2K_1%
VPCIE = 1.0 V
+VPCIE
50-,52-,53-,57-
Close to GPU
PEG_RX0N 49- C42 0.1uF_16V 17- PEG_C_RX0N
PEG_RX1N 49- C41 0.1uF_16V 17- PEG_C_RX1N
PEG_RX2N 49- C40 0.1uF_16V 17- PEG_C_RX2N
PEG_RX3N 49- C19 0.1uF_16V 17- PEG_C_RX3N
PEG_RX4N 49- C47 0.1uF_16V 17- PEG_C_RX4N
PEG_RX5N 49- C16 0.1uF_16V 17- PEG_C_RX5N
PEG_RX6N 49- C24 0.1uF_16V 17- PEG_C_RX6N
PEG_RX7N 49- C22 0.1uF_16V 17- PEG_C_RX7N
PEG_RX0P 49- C43 0.1uF_16V 17- PEG_C_RX0P
PEG_RX1P 49- C40 0.1uF_16V 17- PEG_C_RX1P
PEG_RX2P 49- C45 0.1uF_16V 17- PEG_C_RX2P
PEG_RX3P 49- C18 0.1uF_16V 17- PEG_C_RX3P
PEG_RX4P 49- C25 0.1uF_16V 17- PEG_C_RX4P
PEG_RX5P 49- C17 0.1uF_16V 17- PEG_C_RX5P
PEG_RX6P 49- C23 0.1uF_16V 17- PEG_C_RX6P
PEG_RX7P 49- C21 0.1uF_16V 17- PEG_C_RX7P
+V3S_RUN
50-,51-,52-
C37 0.1uF_16v
DGPU_HOLD_RST# 28-
R30 100K_5%
U2 TC7SZ08FU
PLT_RST# 28-,39-,41-
R13 0_5%_OPEN
49- PEG_SLT_RST#
SWITCHABLE GRAPHICS
This part is only for Intel platform
INVENTEC
TITLE RKY15HR
GPU-1
SIZE A3
CODE CS
DOC. NUMBER 1310A24121-0-MTR
REV A01
CHANGE by Chou, Leo
1-Dec-2010
SHEET 49 OF 58

MEM_ID3 R61	MEM_ID2 R33	MEM_ID1 R50	MEM_ID0 R51	vendor
0	0	0	1	Samsung(512MB) (Default)
0	0	1	1	hynix (512MB)
0	0	0	0	Samsung(1G)
0	0	1	0	hynix (1G)
0	1	1	0	TBD

STRAPS	PIN	Description of default settings
TX_PWRS_ENB	GPIO0	PCIE full TX output swing.
TX_DEEMPH_EN	GPIO1	PCIE transmitter de-emphasis enabled.
BIF_GEN2_EN_A	GPIO2	PCIE GEN2 enabled
BIF_DEBUG_ACCESS	GPIO4	Debug signals muxed out.
	GPIO7_BLON	Control Backlight On / Off
BIF_VGA_DIS	GPIO9	VGA ENABLED
ROMIDCFG(2:0)	GPIO[13:11]	Memory aperture size select.

If GPIO_22_EN = 0 , then GPIO[13:11] defines the primary memory aperture size.

GPIO_13	GPIO_12	GPIO_11	Memory aperture size
0	0	1	512MB / 256MB (Default)
1	1	0	reserved

POW_SW1	POW_SW0	+VDDC_GPU
0	0	1.1V
0	1	1V
1	0	0.95V
1	1	0.9V

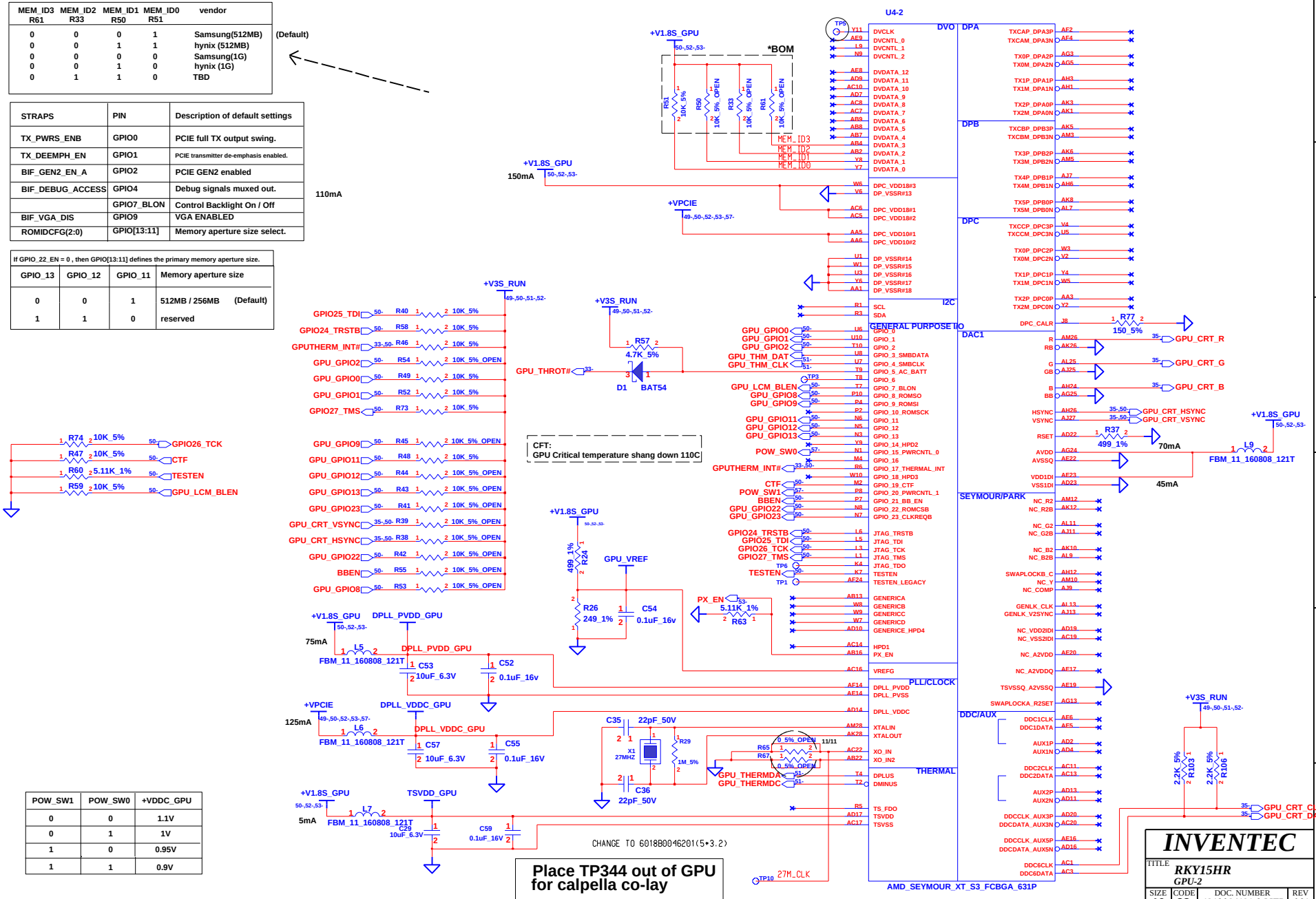

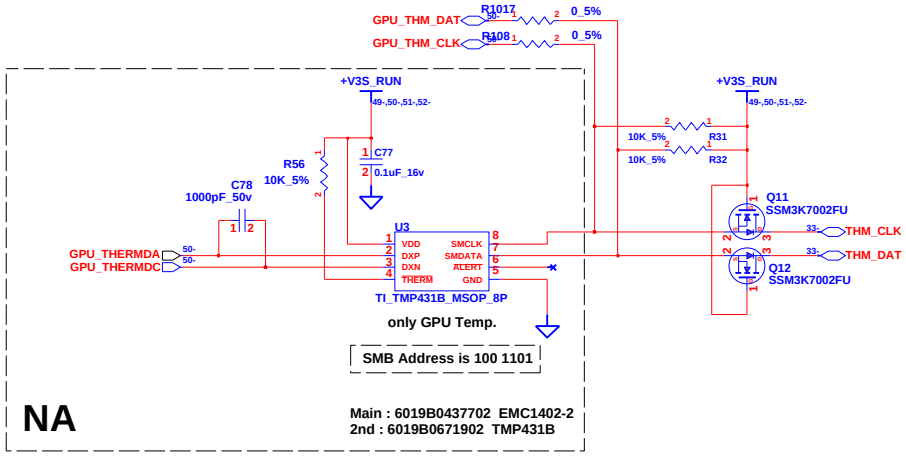

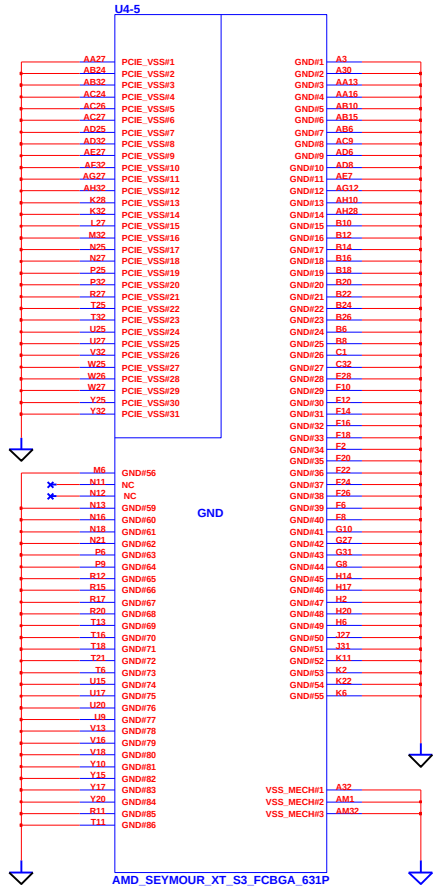

CHANGE by	Chou, Leo	1-Dec-2010	

INVENTEC

TITLE: RKY15HR
GPU-3

SIZE	CODE	DOC. NUMBER	REV
A3	CS	1310A24121-0-MTR	A01

SHEET 51 OF 58

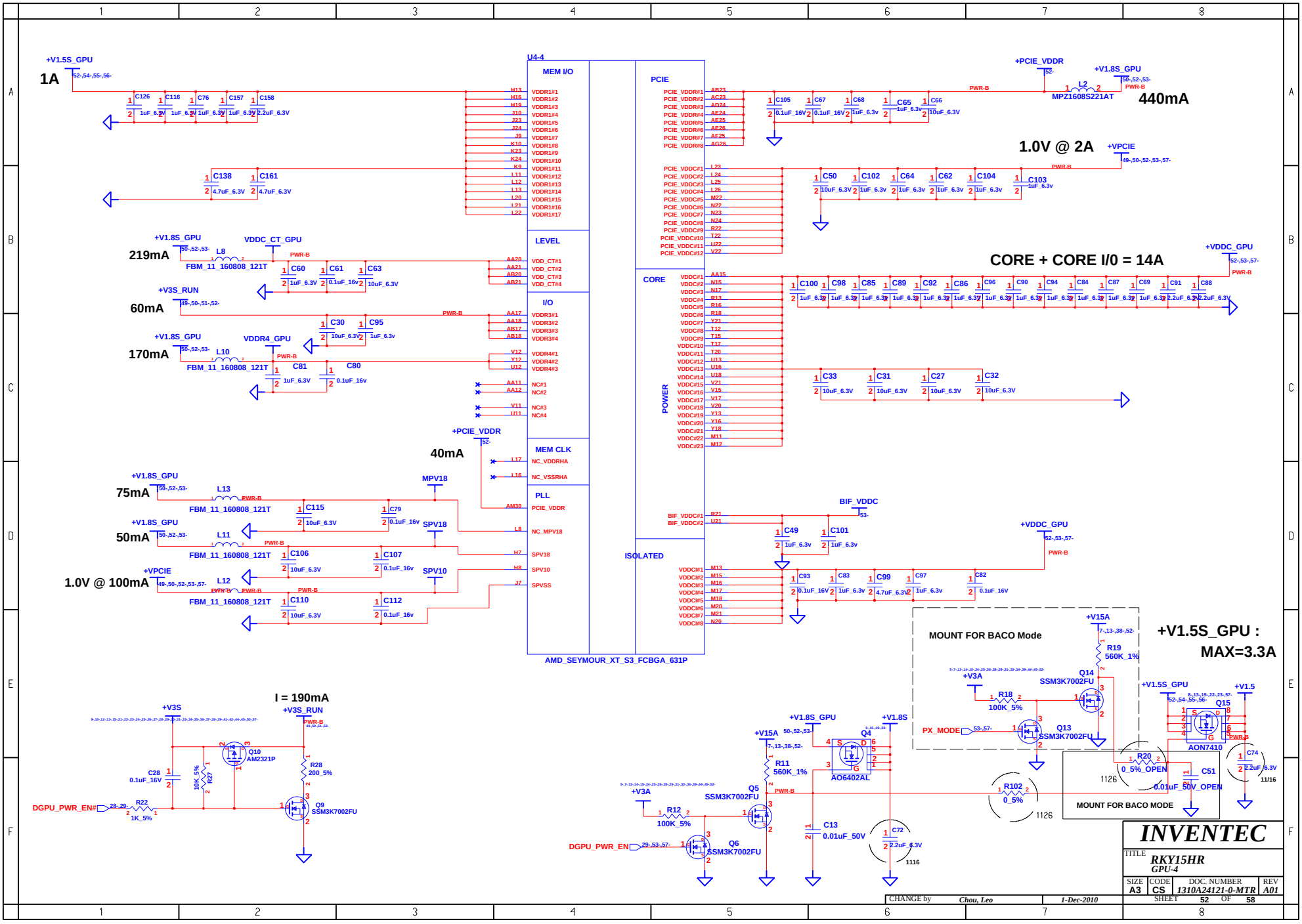
U4-4
MEM I/O
LEVEL
I/O
MEM CLK
PLL
PCIE
CORE
POWER
ISOLATED
AMD_SEYMOUR_XT_S3_FCBGA_631P
+V1.5S_GPU
1A
440mA
+PCIE_VDDR
+V1.8S_GPU
MPZ1608S221AT
1.0V @ 2A
+VPCIE
CORE + CORE I/0 = 14A
+VDDC_GPU
219mA
VDDC_CT_GPU
FBM_11_160808_121T
60mA
+V3S_RUN
170mA
VDDR4_GPU
40mA
75mA
MPV18
50mA
SPV18
1.0V @ 100mA
SPV10
BIF_VDDC
+V1.5S_GPU :
MAX=3.3A
MOUNT FOR BACO Mode
MOUNT FOR BACO MODE
SSM3K7002FU
AO6402L
AON7410
PX_MODE
I = 190mA
+V3S
AM2321P
DGPU_PWR_EN#
DGPU_PWR_EN
+V15A
+V1.8S
+V1.5
INVENTEC
RKY15HR
GPU-4
SIZE A3
CODE CS
DOC. NUMBER 1310A24121-0-MTR
REV A01
SHEET 52 OF 58
CHANGE by Chou, Leo
1-Dec-2010

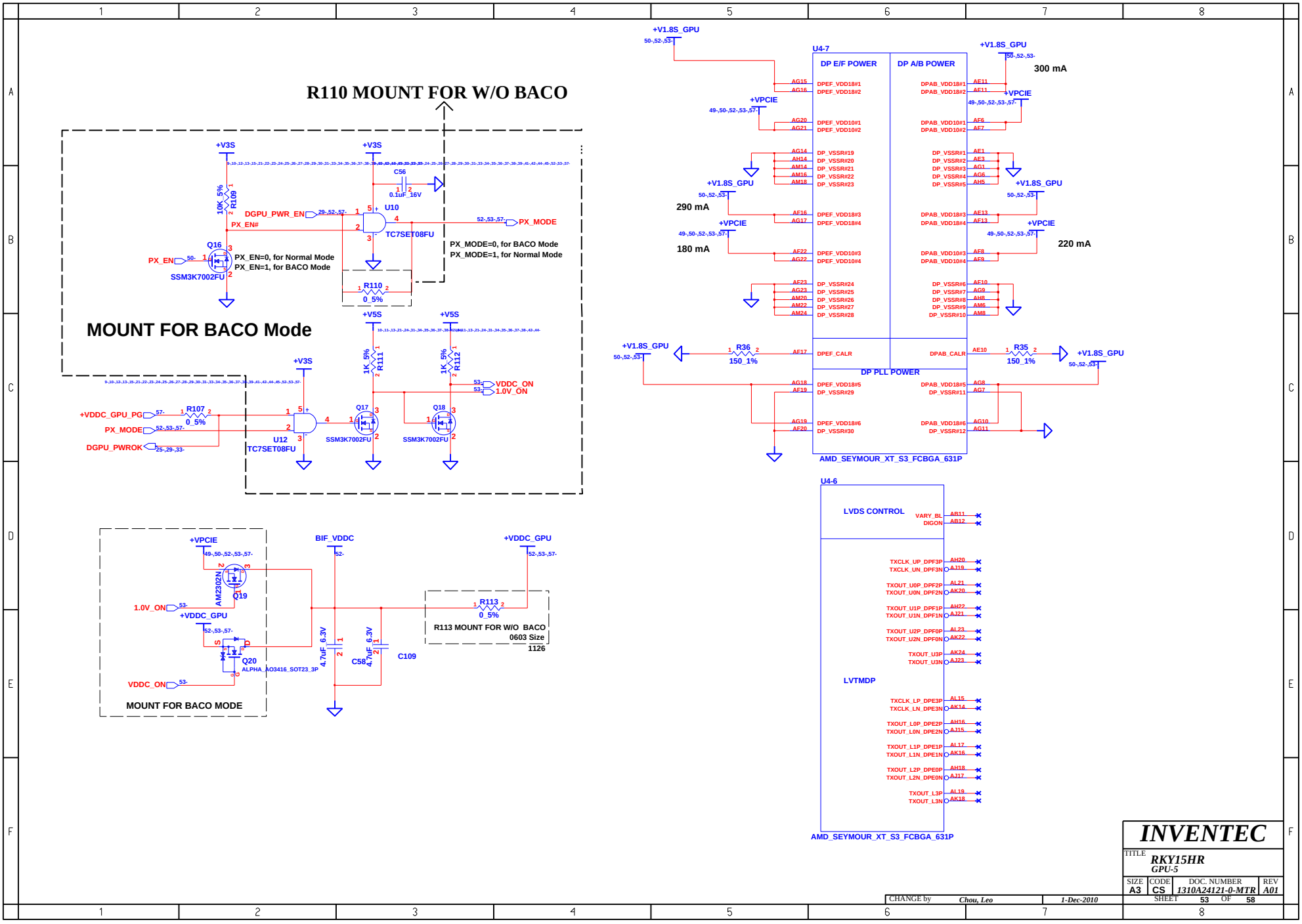
R110 MOUNT FOR W/O BACO
MOUNT FOR BACO Mode
+V3S
R109 10K_5%
DGPU_PWR_EN
PX_EN#
C56 0.1uF_16V
U10 TC7SET08FU
PX_MODE
PX_EN
Q16 SSM3K7002FU
PX_EN=0, for Normal Mode
PX_EN=1, for BACO Mode
PX_MODE=0, for BACO Mode
PX_MODE=1, for Normal Mode
R110 0_5%
+V5S
R111 1K_5%
R112 1K_5%
VDDC_ON
1.0V_ON
+VDDC_GPU_PG
R107 0_5%
DGPU_PWROK
U12 TC7SET08FU
Q17 SSM3K7002FU
Q18 SSM3K7002FU
+VPCIE
Q19 AM2302N
1.0V_ON
+VDDC_GPU
Q20 ALPHA_AO3416_SOT23_3P
VDDC_ON
MOUNT FOR BACO MODE
BIF_VDDC
4.7uF_6.3V
C58
C109
+VDDC_GPU
R113 0_5%
R113 MOUNT FOR W/O BACO
0603 Size
1126
+V1.8S_GPU
U4-7
DP E/F POWER
DP A/B POWER
DP PLL POWER
300 mA
290 mA
180 mA
220 mA
R36 150_1%
R35 150_1%
DPEF_CALR
DPAB_CALR
AMD_SEYMOUR_XT_S3_FCBGA_631P
U4-6
LVDS CONTROL
VARY_BL
DIGON
LVTMDP
TXCLK_UP_DPF3P
TXCLK_UN_DPF3N
TXOUT_U0P_DPF2P
TXOUT_U0N_DPF2N
TXOUT_U1P_DPF1P
TXOUT_U1N_DPF1N
TXOUT_U2P_DPF0P
TXOUT_U2N_DPF0N
TXOUT_U3P
TXOUT_U3N
TXCLK_LP_DPE3P
TXCLK_LN_DPE3N
TXOUT_L0P_DPE2P
TXOUT_L0N_DPE2N
TXOUT_L1P_DPE1P
TXOUT_L1N_DPE1N
TXOUT_L2P_DPE0P
TXOUT_L2N_DPE0N
TXOUT_L3P
TXOUT_L3N
AMD_SEYMOUR_XT_S3_FCBGA_631P
INVENTEC
TITLE
RKY15HR
GPU-5
SIZE A3
CODE CS
DOC. NUMBER 1310A24121-0-MTR
REV A01
CHANGE by Chou, Leo
1-Dec-2010
SHEET 53 OF 58

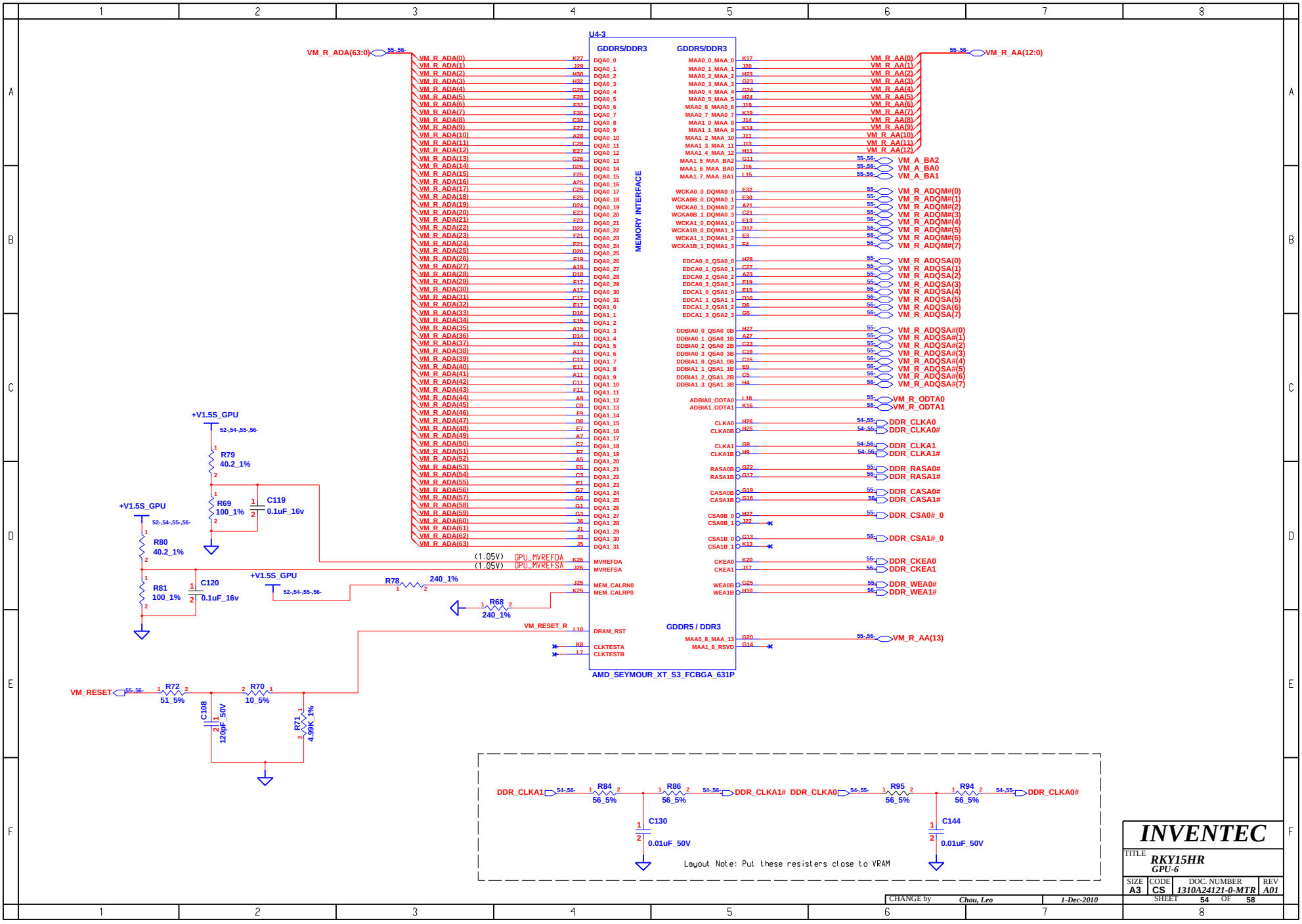

INVENTEC

TITLE RKY15HR
GPU-6

SIZE	CODE	DOC. NUMBER	REV
A3	CS	1310A24121-0-MTR	A01

CHANGE by Chou, Leo 1-Dec-2010

SHEET 54 OF 58

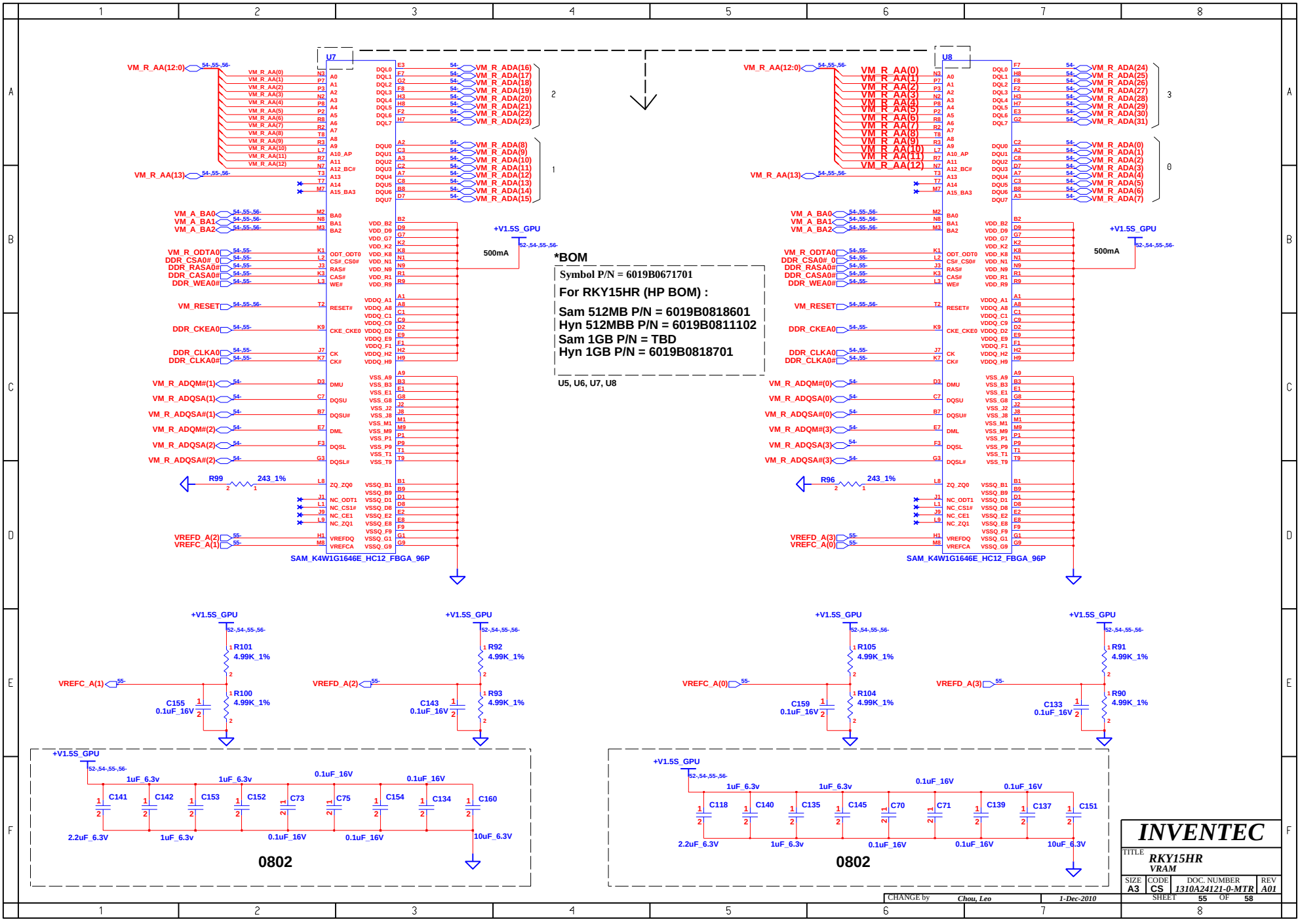
U7
U8
SAM_K4W1G1646E_HC12_FBGA_96P
+V1.5S_GPU
500mA
R99 243_1%
R96 243_1%
R101 4.99K_1%
R100 4.99K_1%
R92 4.99K_1%
R93 4.99K_1%
R105 4.99K_1%
R104 4.99K_1%
R91 4.99K_1%
R90 4.99K_1%
C155 0.1uF_16V
C143 0.1uF_16V
C159 0.1uF_16V
C133 0.1uF_16V
C141 C142 C153 C152 C73 C75 C154 C134 C160
C118 C140 C135 C145 C70 C71 C139 C137 C151
2.2uF_6.3V
1uF_6.3v
0.1uF_16V
10uF_6.3V
0802
*BOM
Symbol P/N = 6019B0671701
For RKY15HR (HP BOM) :
Sam 512MB P/N = 6019B0818601
Hyn 512MBB P/N = 6019B0811102
Sam 1GB P/N = TBD
Hyn 1GB P/N = 6019B0818701
U5, U6, U7, U8
INVENTEC
TITLE
RKY15HR
VRAM
SIZE A3
CODE CS
DOC. NUMBER 1310A24121-0-MTR
REV A01
SHEET 55 OF 58
CHANGE by Chou, Leo
1-Dec-2010

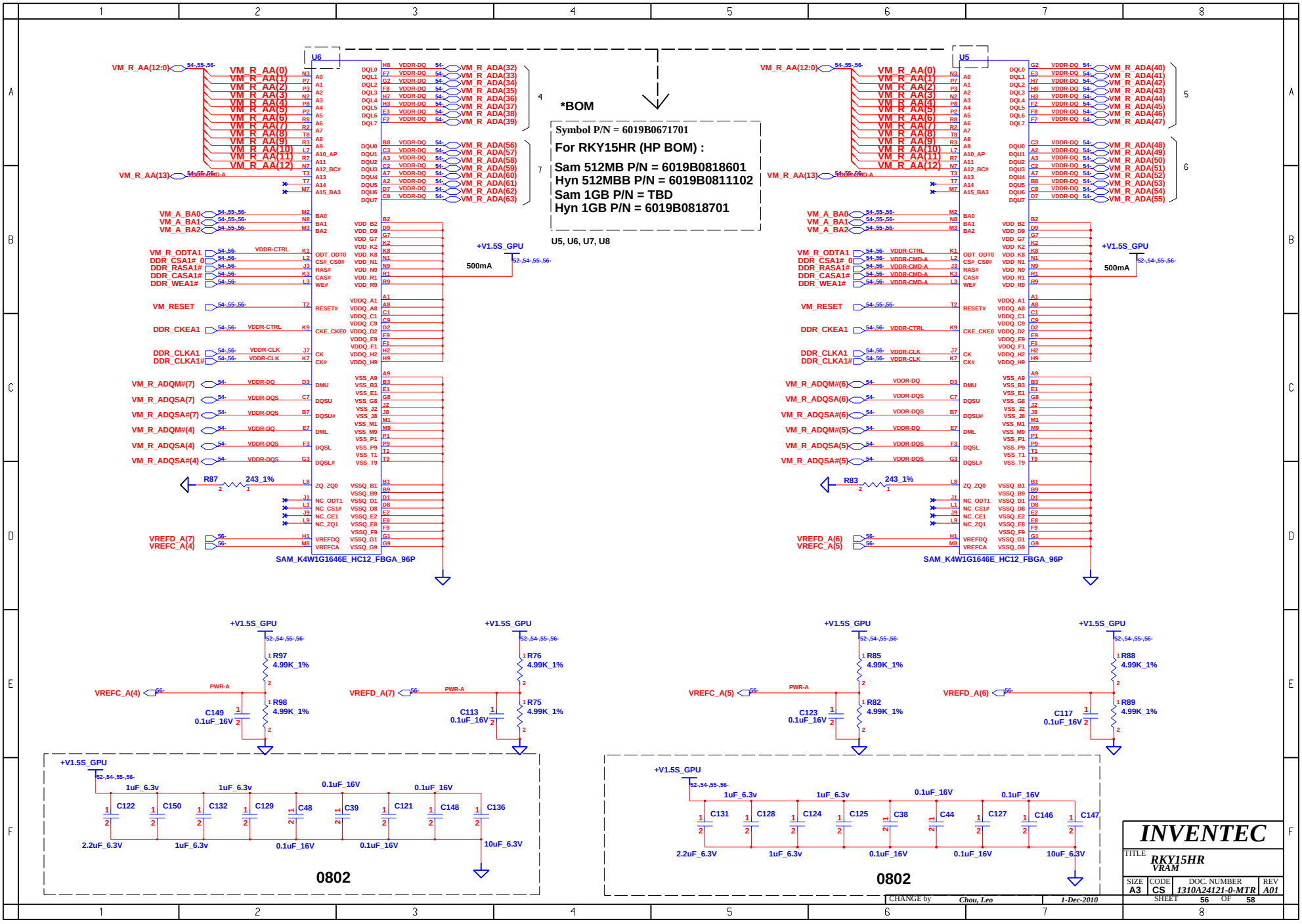
U6
U5
SAM_K4W1G1646E_HC12_FBGA_96P
+V1.5S_GPU
500mA
R87 243_1%
R83 243_1%
VREFC_A(4)
VREFD_A(7)
VREFC_A(5)
VREFD_A(6)
R97 4.99K_1%
R98 4.99K_1%
R76 4.99K_1%
R75 4.99K_1%
R85 4.99K_1%
R82 4.99K_1%
R88 4.99K_1%
R89 4.99K_1%
C149 0.1uF_16V
C113 0.1uF_16V
C123 0.1uF_16V
C117 0.1uF_16V
C122 C150 C132 C129 C48 C39 C121 C148 C136
C131 C128 C124 C125 C38 C44 C127 C146 C147
1uF_6.3v
0.1uF_16V
2.2uF_6.3V
10uF_6.3V
0802
*BOM
Symbol P/N = 6019B0671701
For RKY15HR (HP BOM) :
Sam 512MB P/N = 6019B0818601
Hyn 512MB P/N = 6019B0811102
Sam 1GB P/N = TBD
Hyn 1GB P/N = 6019B0818701
U5, U6, U7, U8
INVENTEC
TITLE
RKY15HR
VRAM
SIZE A3
CODE CS
DOC. NUMBER 1310A24121-0-MTR
REV A01
SHEET 56 OF 58
CHANGE by Chou, Leo
1-Dec-2010

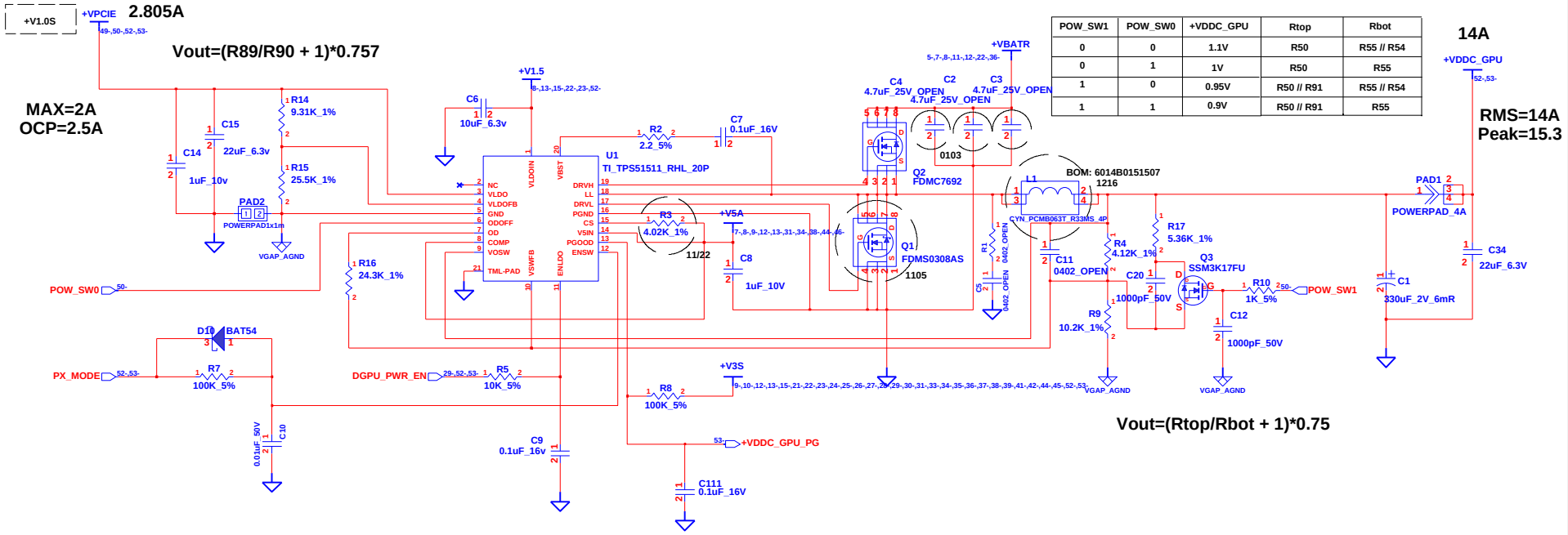

POW_SW1	POW_SW0	+VDDC_GPU	Rtop	Rbot
0	0	1.1V	R50	R55 // R54
0	1	1V	R50	R55
1	0	0.95V	R50 // R91	R55 // R54
1	1	0.9V	R50 // R91	R55

CHANGE by	Chou, Leo	1-Dec-2010	

INVENTEC

TITLE: *RKY15HR*
GPU-Power

SIZE	CODE	DOC. NUMBER	REV
A3	CS	1310A24121-0-MTR	A01

SHEET 57 OF 58