THIS DRAWING AND SPECIFICATIONS, HEREIN, ARE THE PROPERTY OF INVENTEC CORPORATION AND SHALL NOT BE REPODUCED, COPIED, OR USED IN WHOLE OR IN PART AS THE BASIS FOR THE MANUFACTURE OR SALE OF ITEMS WITHOUT WRITTEN PERMISSION, INVENTEC CORPORATION 2009 ALL RIGHT RESERVED

HSF Property : **RoHS**

Valima 2010

AMD C2 UMA

PV Build

2009/03/11

DATE	CHANGE NO.	REV

	EE	DATE	POWER	DATE
DRAWER				
DESIGN				
CHECK				
RESPONSIBLE				

SIZE = 3 VER :

FILE NAME : XXXX-XXXXXX-XX

P/N XXXXXXXXXXXX

INVENTEC

TITLE *VV10AU2*

SIZE	CODE	DOC. NUMBER	REV
A3	CS	*MTR*	*A01*

SHEET 1 OF 57

TABLE OF CONTENTS

PAGE
5- DC& BATTERY CHARGER
6- SELECT & BATTERY CONN
7- +V5A,+V3A & +V2.5S
8- OCP
9- +VCC_NB & +V1.2A
10- +VCC_CORE
11- +V1.1S & +V1.5S_VGA
12- DDR2 POWER
13- POWER(SLEEP)
14- POWER(SEQUENCE)

PAGE
15- CPU-1
16- CPU-2
17- CPU-3
18- CPU-4
19- DDR2-DIMM0
20- DDR2-DIMM1
22- THERMAL&FAN CONTROLLER
23- RS880M-1
24- RS880M-2
25- RS880M-3
26- RS880M-4
27- CRT
28- LCD CONN & WEBCAM CONN
39- SB820-1
30- SB820-2
31- SB820-4
32- SB820-3
33- SB820-5

PAGE
34- KBC
35- KB & TP CONN
36- SPI
37- HDD & ODD CONN
38- USB CONN
39- AZALIA CODEC
40- Earphone & MIC JACK
41- MDC CONN
42- NIC 10/100 RJ45 CONN
43- 10/100-LAN- CONTROLLER
44- MiNi CARD & BT CONN
45- NEW CARD
46- SW/B & LED/B CONN
47- SCREW
48- Power Plan CAP
49- HDMI
50- SD/MMC Card Reader
51- Headphone & MIC JACK
52- Power Button & LID Switch Board
53- 14"ODD Extend Board
54- USB Right Side Board
55- Pick Button Board

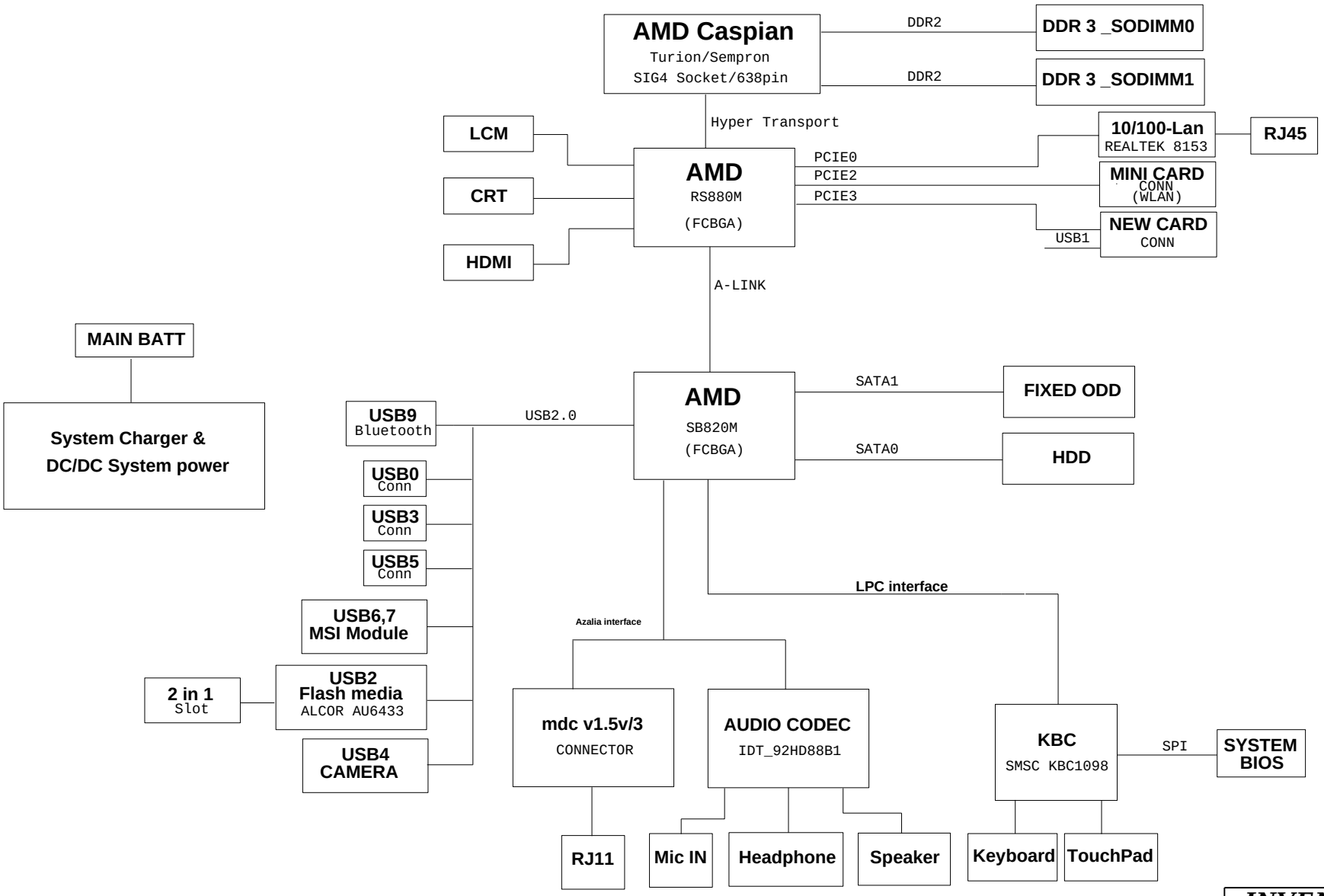

INVENTEC

TITLE VV10AU2
Block Diagram

SIZE	CODE	DOC. NUMBER	REV
A3	CS	MTR	A01

CHANGE by 11-Mar-2010 SHEET 3 OF 57

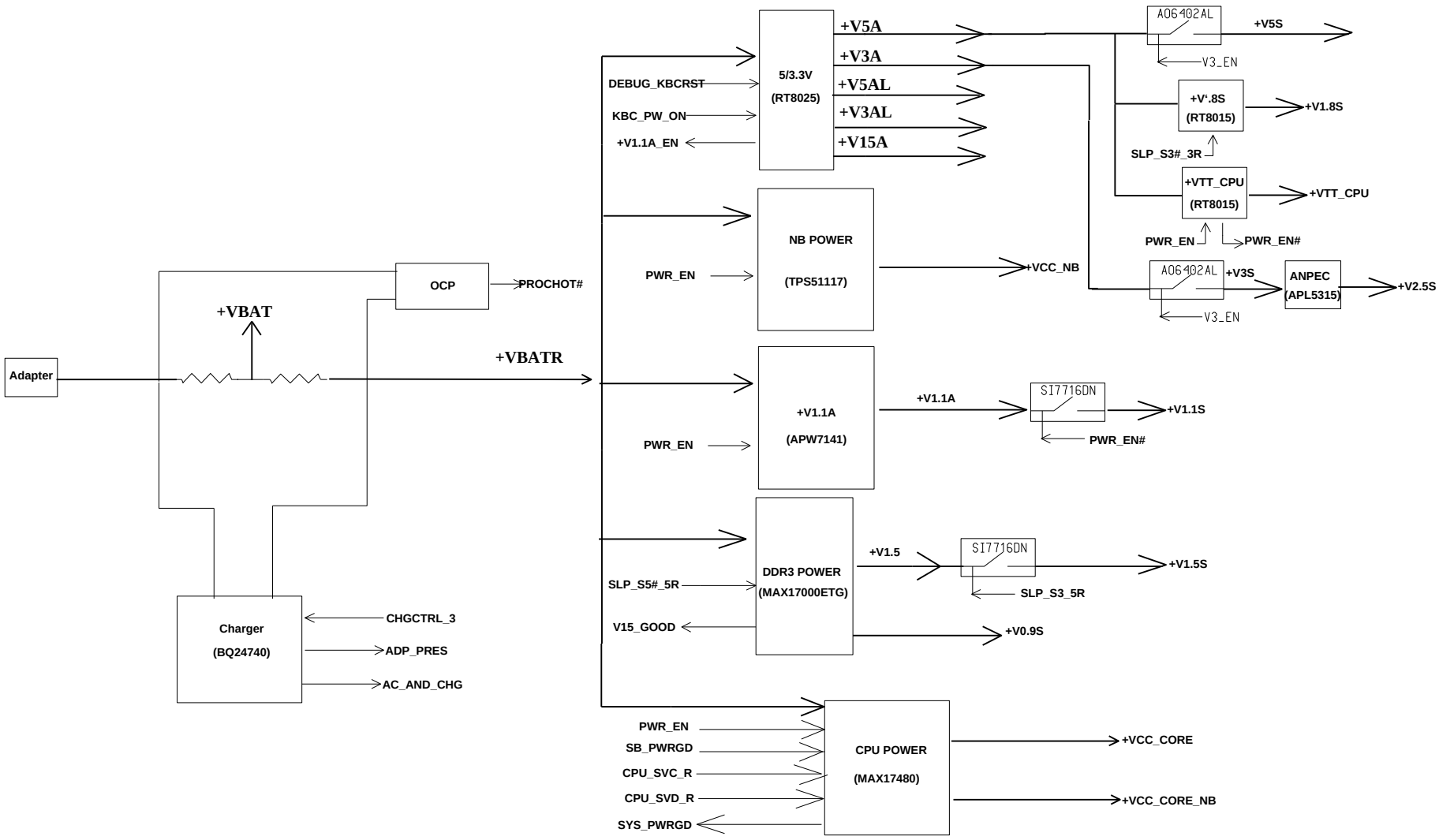

INVENTEC			
TITLE VV10AU2			
SIZE A3	CODE CS	DOC. NUMBER MTR	REV A01
CHANGE by	11-Mar-2010	SHEET 4 OF 57	

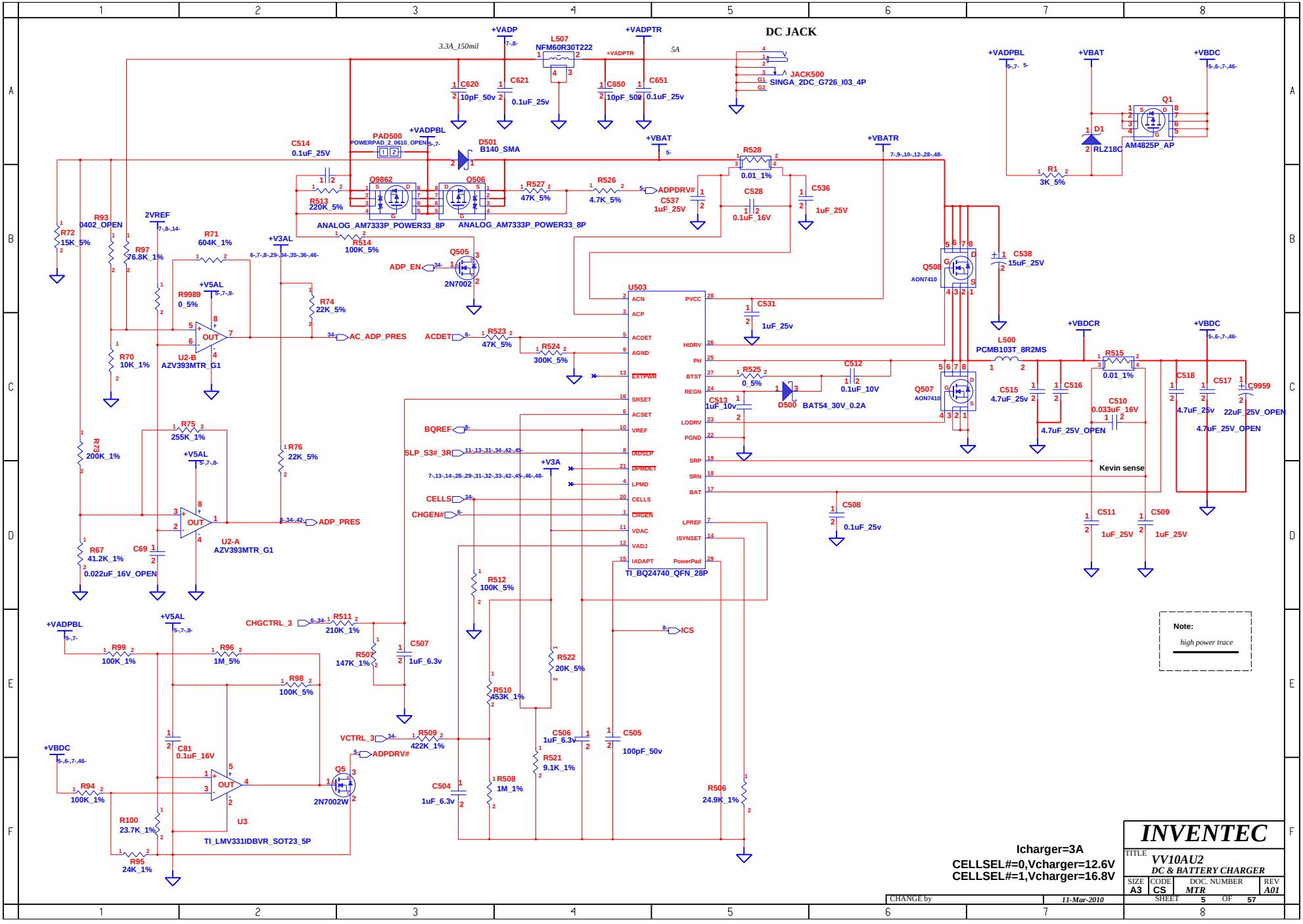
DC JACK
JACK500
SINGA_2DC_G726_I03_4P
3.3A_150mil
5A
+VADP
+VADPTR
L507
NFM60R30T222
C620
10pF_50v
C621
0.1uF_25v
C650
10pF_50v
C651
0.1uF_25v
+VADPBL
+VBAT
+VBDC
Q1
AM4825P_AP
D1
RLZ18C
R1
3K_5%
PAD500
POWERPAD_2_0610_OPEN
D501
B140_SMA
+VBATR
C514
0.1uF_25V
Q9862
Q506
ANALOG_AM7333P_POWER33_8P
R513
220K_5%
R514
100K_5%
R527
47K_5%
R526
4.7K_5%
ADPDRV#
C537
1uF_25V
R528
0.01_1%
C528
0.1uF_16V
C536
1uF_25V
R72
15K_5%
R93
0402_OPEN
2VREF
R97
76.8K_1%
R71
604K_1%
+V3AL
R9989
0_5%
+V5AL
U2-B
AZV393MTR_G1
R70
10K_1%
R74
22K_5%
AC_ADP_PRES
ADP_EN
Q505
2N7002
Q508
AON7410
C538
15uF_25V
U503
ACN
ACP
ACDET
AGND
EXTPWR
SRSET
ACSET
VREF
IADSLP
DPMDET
LPMD
CELLS
CHGEN
VDAC
VADJ
IADAPT
PVCC
HIDRV
PH
BTST
REGN
LODRV
PGND
SRP
SRN
BAT
LPREF
ISYNSET
PowerPad
TI_BQ24740_QFN_28P
C531
1uF_25v
ACDET
R523
47K_5%
R524
300K_5%
R525
0_5%
C512
0.1uF_10V
C513
1uF_10v
D500
BAT54_30V_0.2A
Q507
AON7410
L500
PCMB103T_8R2MS
+VBDCR
R515
0.01_1%
C515
4.7uF_25V
C516
4.7uF_25V_OPEN
C510
0.033uF_16V
C518
4.7uF_25v
C517
4.7uF_25V_OPEN
C9959
22uF_25V_OPEN
Kevin sense
C508
0.1uF_25v
C511
1uF_25V
C509
1uF_25V
R75
255K_1%
R73
200K_1%
R76
22K_5%
ADP_PRES
U2-A
AZV393MTR_G1
R67
41.2K_1%
C69
0.022uF_16V_OPEN
BQREF
SLP_S3#_3R
CELLS
CHGEN#
+V3A
R512
100K_5%
ICS
CHGCTRL_3
R511
210K_1%
R502
147K_1%
C507
1uF_6.3v
R99
100K_1%
R96
1M_5%
R98
100K_5%
R510
453K_1%
R522
20K_5%
VCTRL_3
R509
422K_1%
C81
0.1uF_16V
Q5
2N7002W
U3
TI_LMV331IDBVR_SOT23_5P
R94
100K_1%
R100
23.7K_1%
R95
24K_1%
C504
1uF_6.3v
R508
1M_1%
C506
1uF_6.3v
C505
100pF_50v
R521
9.1K_1%
R506
24.9K_1%
Note:
high power trace
Icharger=3A
CELLSEL#=0,Vcharger=12.6V
CELLSEL#=1,Vcharger=16.8V
INVENTEC
TITLE
VV10AU2
DC & BATTERY CHARGER
SIZE A3
CODE CS
DOC. NUMBER MTR
REV A01
SHEET 5 OF 57
CHANGE by
11-Mar-2010

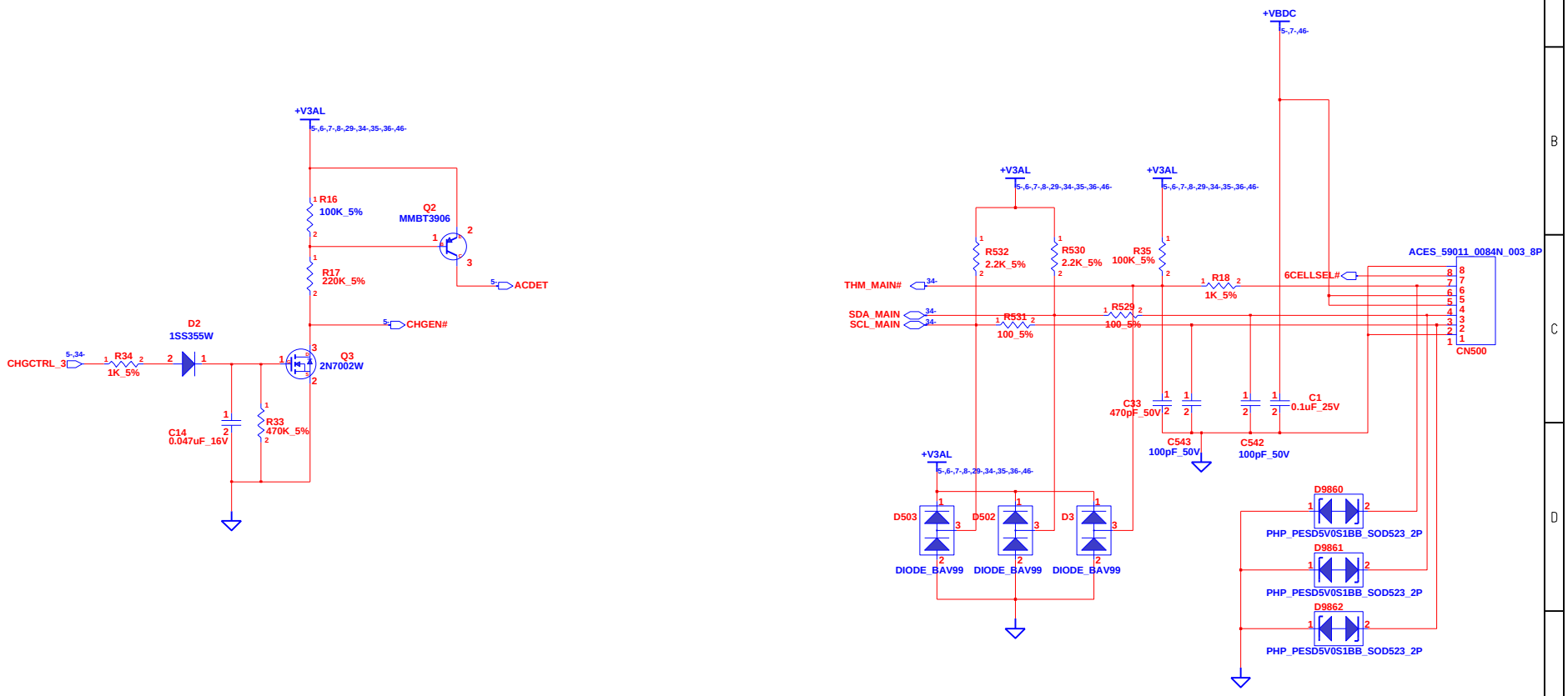

INVENTEC

TITLE
VV10AU2
SELECT & BATTERY CONN

SIZE	CODE	DOC. NUMBER	REV
A3	CS	MTR	A01

CHANGE by | 11-Mar-2010

SHEET 6 OF 57

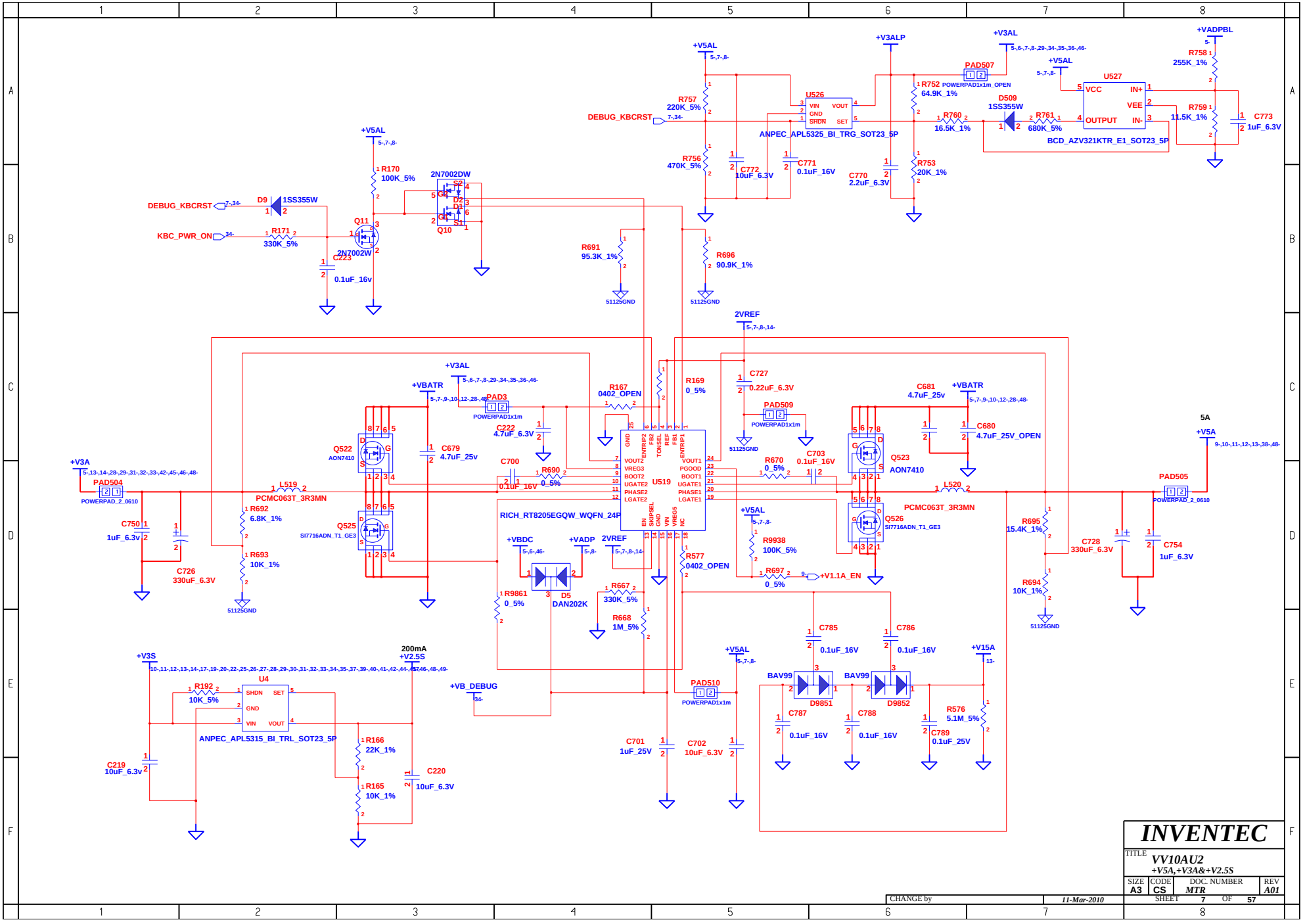

INVENTEC

TITLE
VV10AU2
+V5A,+V3A&+V2.5S

SIZE	CODE	DOC. NUMBER	REV
A3	CS	MTR	A01

CHANGE by | 11-Mar-2010 | SHEET 7 OF 57

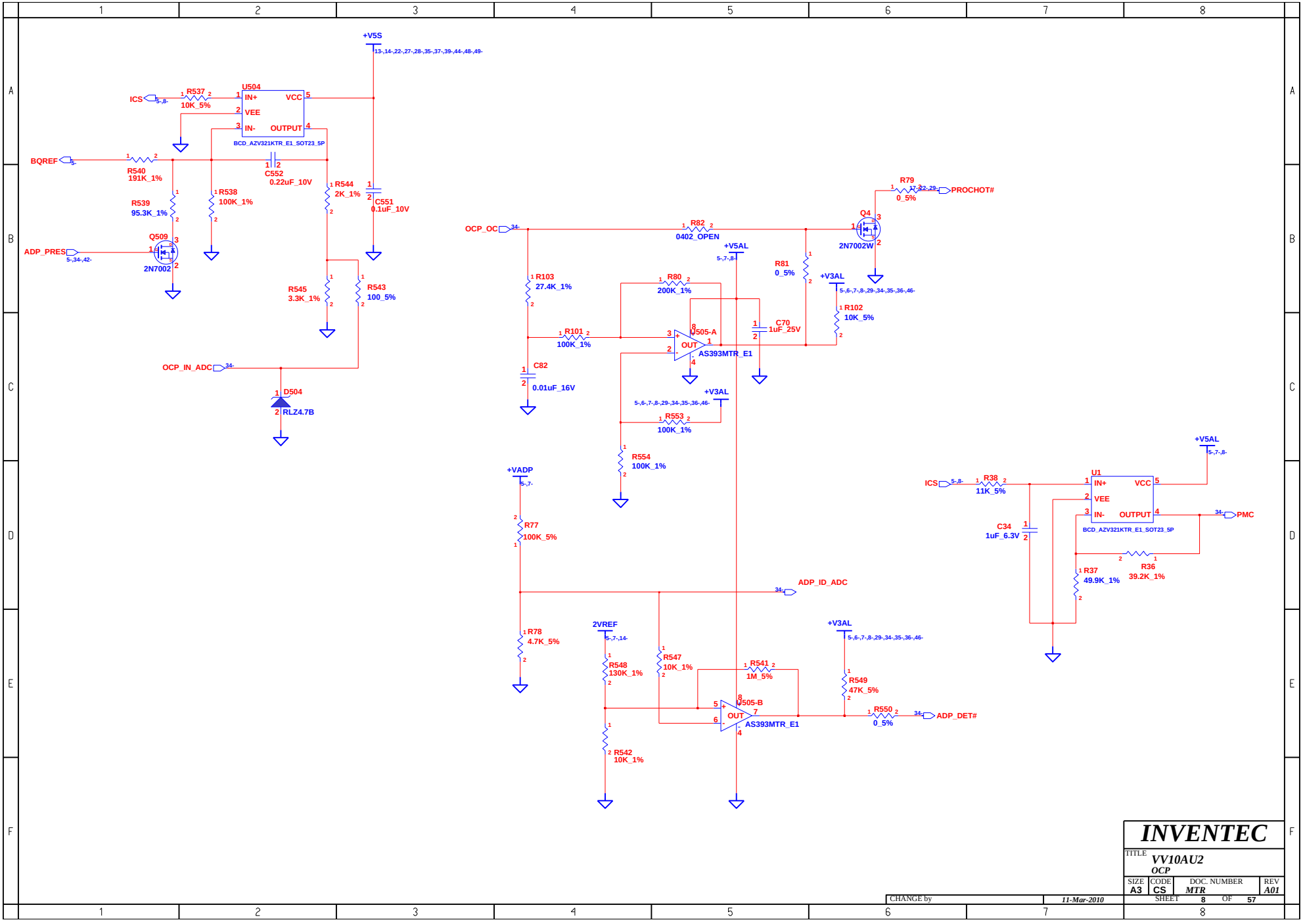

INVENTEC

TITLE
VV10AU2
OCP

SIZE	CODE	DOC. NUMBER	REV
A3	CS	MTR	A01

CHANGE by 11-Mar-2010

SHEET 8 OF 57

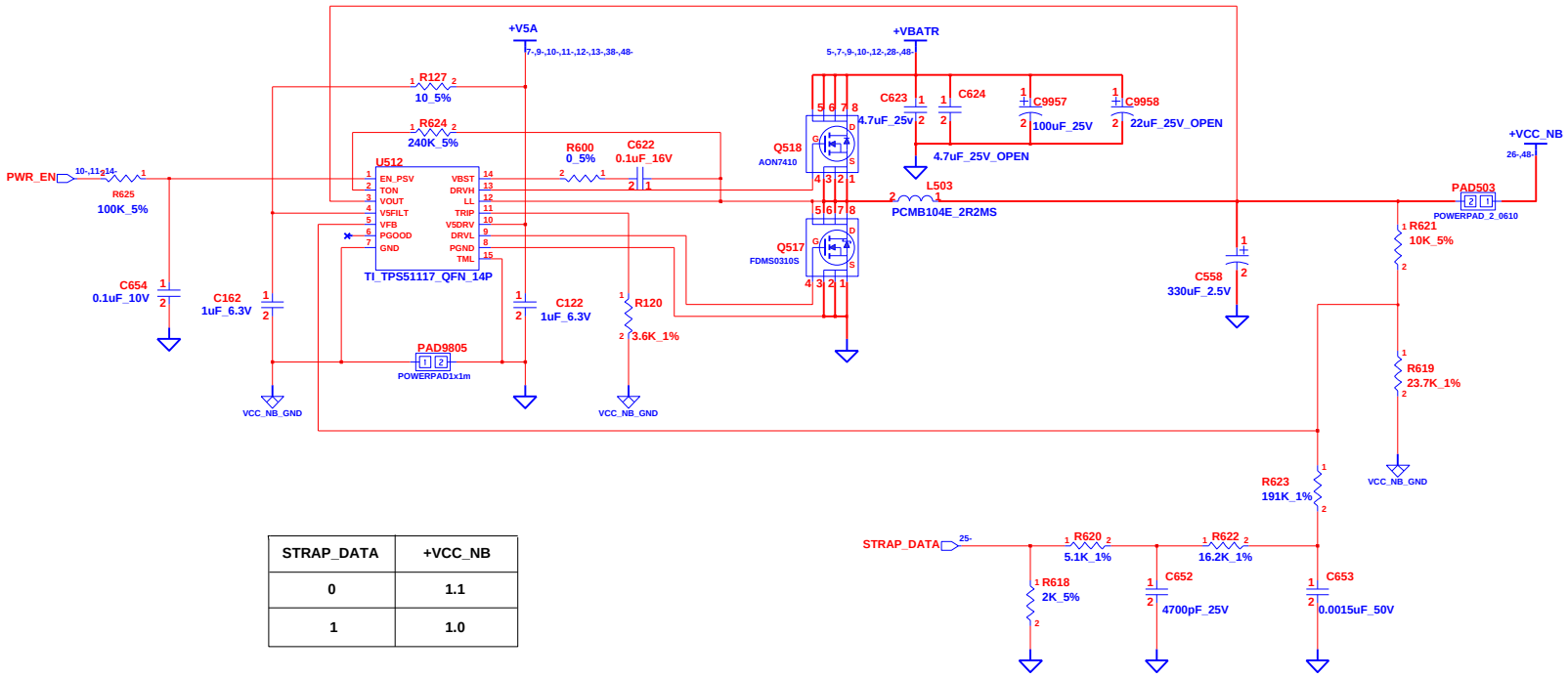

STRAP_DATA	+VCC_NB
0	1.1
1	1.0

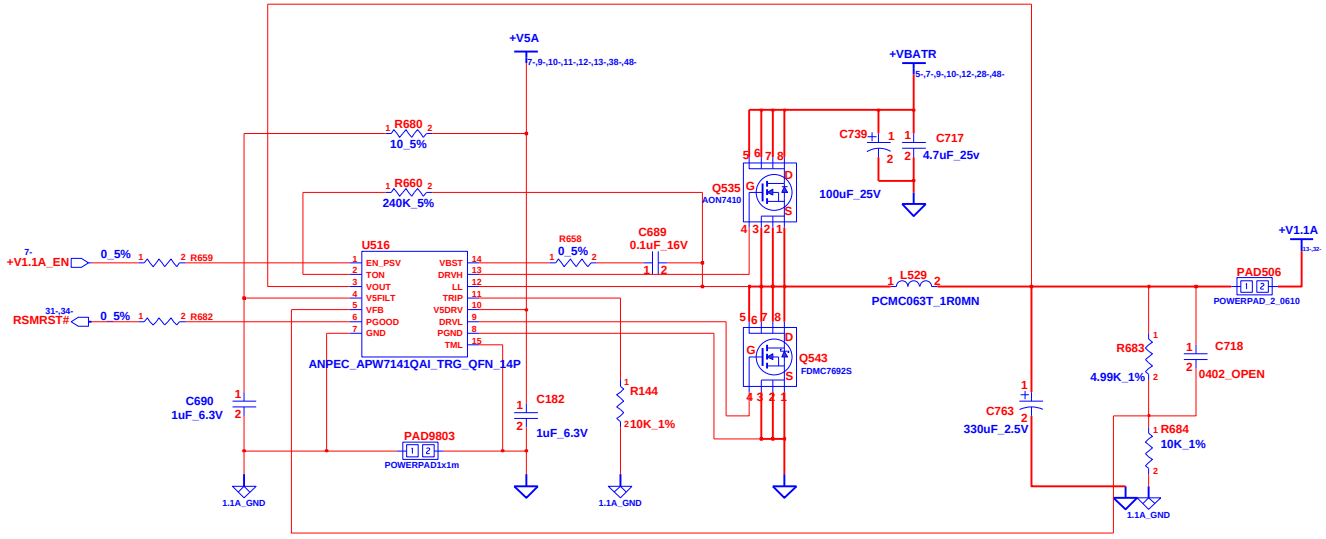

INVENTEC

TITLE
VV10AU2
+VCC_NB & +V1.2A

SIZE	CODE	DOC. NUMBER	REV
A3	CS	MTR	A01

CHANGE by | 11-Mar-2010 | SHEET 9 OF 57

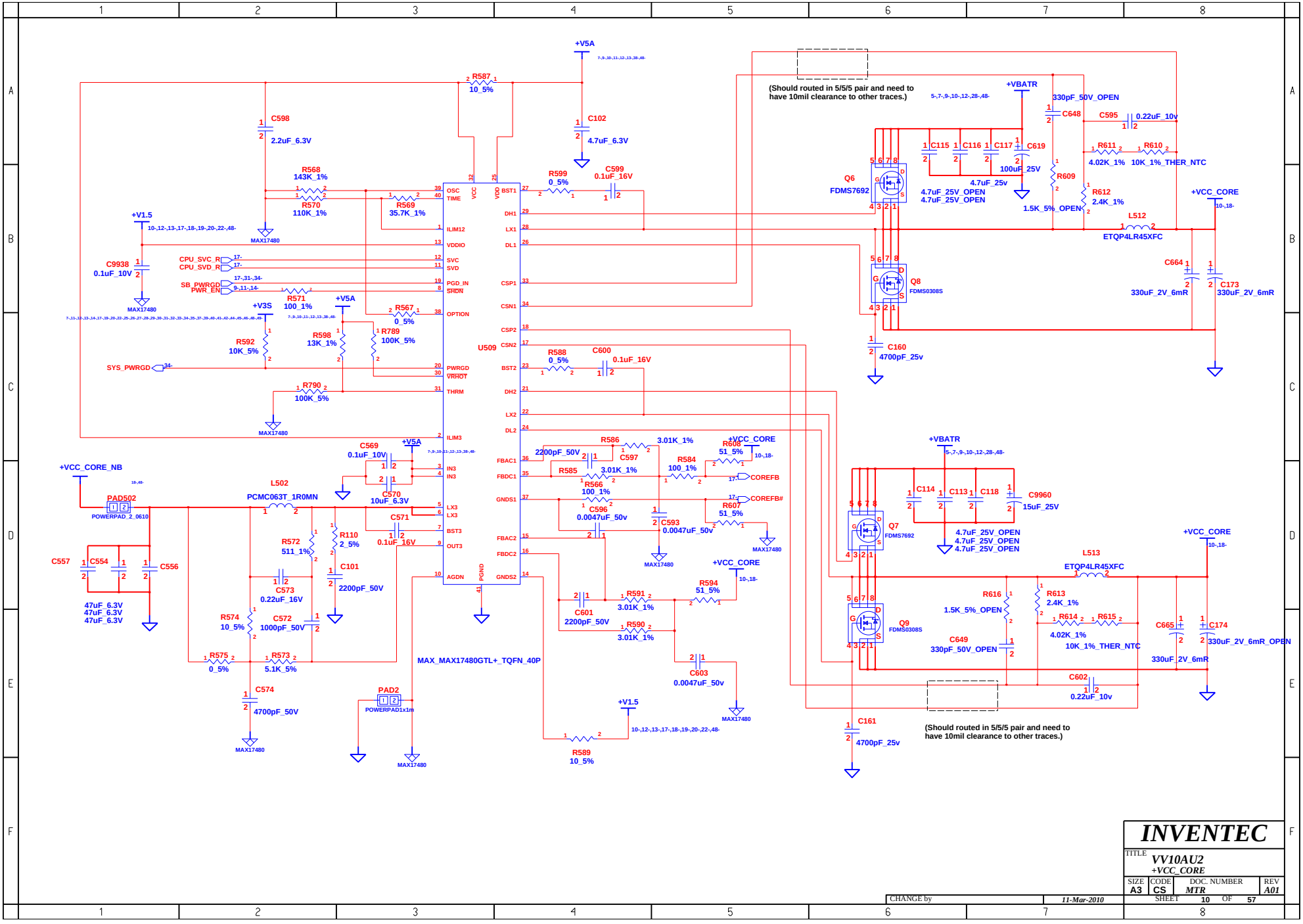
U509
MAX_MAX17480GTL+_TQFN_40P
OSC
TIME
VCC
VDD
BST1
DH1
LX1
DL1
ILIM12
VDDIO
SVC
SVD
PGD_IN
SHDN
OPTION
CSP1
CSN1
CSP2
CSN2
BST2
DH2
LX2
DL2
PWRGD
VRHOT
THRM
ILIM3
IN3
IN3
LX3
LX3
BST3
OUT3
AGDN
PGND
FBAC1
FBDC1
GNDS1
FBAC2
FBDC2
GNDS2
+V5A
+V1.5
+V3S
+VCC_CORE_NB
+VCC_CORE
+VBATR
R587 10_5%
C598 2.2uF_6.3V
C102 4.7uF_6.3V
R568 143K_1%
R570 110K_1%
R569 35.7K_1%
R599 0_5%
C599 0.1uF_16V
C9938 0.1uF_10V
CPU_SVC_R
CPU_SVD_R
SB_PWRGD
PWR_EN
R571 100_1%
R567 0_5%
R592 10K_5%
R598 13K_1%
R789 100K_5%
SYS_PWRGD
R790 100K_5%
R588 0_5%
C600 0.1uF_16V
C569 0.1uF_10V
C570 10uF_6.3V
C571 0.1uF_16V
L502 PCMC063T_1R0MN
PAD502 POWERPAD_2_0610
C557 47uF_6.3V
C554 47uF_6.3V
C556 47uF_6.3V
R572 511_1%
R110 2_5%
C101 2200pF_50V
C573 0.22uF_16V
R574 10_5%
C572 1000pF_50V
R575 0_5%
R573 5.1K_5%
C574 4700pF_50V
PAD2 POWERPAD1x1m
R586 3.01K_1%
2200pF_50V
C597
R585 3.01K_1%
R566 100_1%
R584 100_1%
R608 51_5%
COREFB
COREFB#
R607 51_5%
C596 0.0047uF_50v
C593 0.0047uF_50v
C601 2200pF_50V
R591 3.01K_1%
R590 3.01K_1%
R594 51_5%
C603 0.0047uF_50v
R589 10_5%
(Should routed in 5/5/5 pair and need to have 10mil clearance to other traces.)
Q6 FDMS7692
Q8 FDMS0308S
Q7 FDMS7692
Q9 FDMS0308S
C648 330pF_50V_OPEN
C595 0.22uF_10v
C115
C116
C117
C619 100uF_25V
4.7uF_25V_OPEN
4.7uF_25V_OPEN
4.7uF_25v
R611 4.02K_1%
R610 10K_1%_THER_NTC
R609 1.5K_5%_OPEN
R612 2.4K_1%
L512 ETQP4LR45XFC
C160 4700pF_25v
C664 330uF_2V_6mR
C173 330uF_2V_6mR
C114
C113
C118
C9960 15uF_25V
L513 ETQP4LR45XFC
R616 1.5K_5%_OPEN
R613 2.4K_1%
R614 4.02K_1%
R615 10K_1%_THER_NTC
C649 330pF_50V_OPEN
C665 330uF_2V_6mR
C174 330uF_2V_6mR_OPEN
C602 0.22uF_10v
C161 4700pF_25v
(Should routed in 5/5/5 pair and need to have 10mil clearance to other traces.)
INVENTEC
TITLE VV10AU2 +VCC_CORE
SIZE A3
CODE CS
DOC. NUMBER MTR
REV A01
SHEET 10 OF 57
CHANGE by
11-Mar-2010

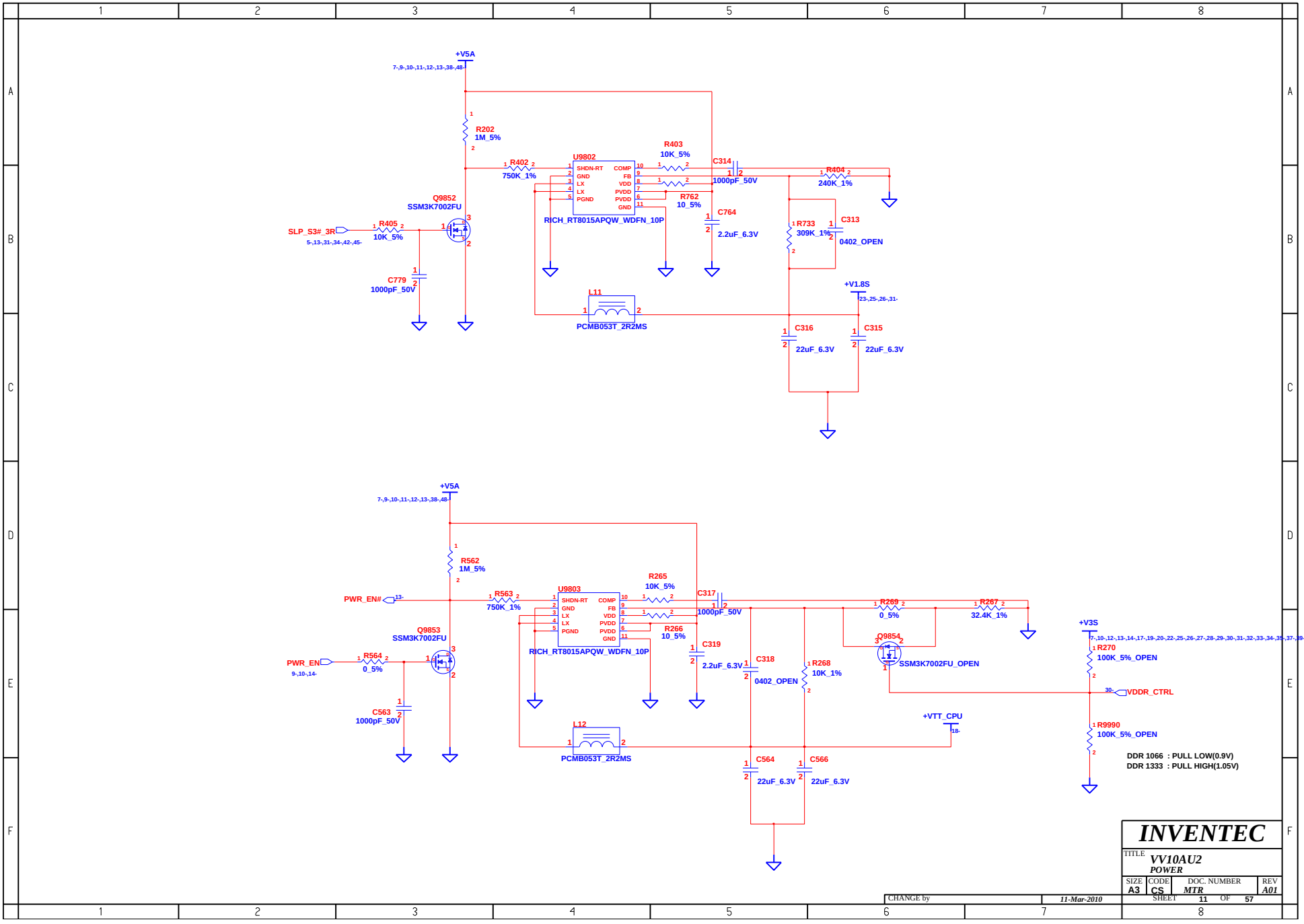
+V5A
7-,9-,10-,11-,12-,13-,38-,48-
R202
1M_5%
R402
750K_1%
U9802
SHDN-RT
GND
LX
LX
PGND
COMP
FB
VDD
PVDD
PVDD
GND
RICH_RT8015APQW_WDFN_10P
R403
10K_5%
C314
1000pF_50V
R404
240K_1%
R762
10_5%
C764
2.2uF_6.3V
R733
309K_1%
C313
0402_OPEN
Q9852
SSM3K7002FU
SLP_S3#_3R
5-,13-,31-,34-,42-,45-
R405
10K_5%
C779
1000pF_50V
L11
PCMB053T_2R2MS
+V1.8S
23-,25-,26-,31-
C316
22uF_6.3V
C315
22uF_6.3V
+V5A
7-,9-,10-,11-,12-,13-,38-,48-
R562
1M_5%
PWR_EN#
13-
R563
750K_1%
U9803
SHDN-RT
GND
LX
LX
PGND
COMP
FB
VDD
PVDD
PVDD
GND
RICH_RT8015APQW_WDFN_10P
R265
10K_5%
C317
1000pF_50V
R266
10_5%
C319
2.2uF_6.3V
C318
0402_OPEN
R268
10K_1%
R269
0_5%
R267
32.4K_1%
Q9854
SSM3K7002FU_OPEN
Q9853
SSM3K7002FU
PWR_EN
9-,10-,14-
R564
0_5%
C563
1000pF_50V
L12
PCMB053T_2R2MS
+VTT_CPU
18-
C564
22uF_6.3V
C566
22uF_6.3V
+V3S
7-,10-,12-,13-,14-,17-,19-,20-,22-,25-,26-,27-,28-,29-,30-,31-,32-,33-,34-,35-,37-,39-,40-,41-,42-,44-,45-,46-,48-,49-
R270
100K_5%_OPEN
30-
VDDR_CTRL
R9990
100K_5%_OPEN
DDR 1066 : PULL LOW(0.9V)
DDR 1333 : PULL HIGH(1.05V)
INVENTEC
TITLE
VV10AU2
POWER
SIZE A3
CODE CS
DOC. NUMBER MTR
REV A01
CHANGE by
11-Mar-2010
SHEET 11 OF 57

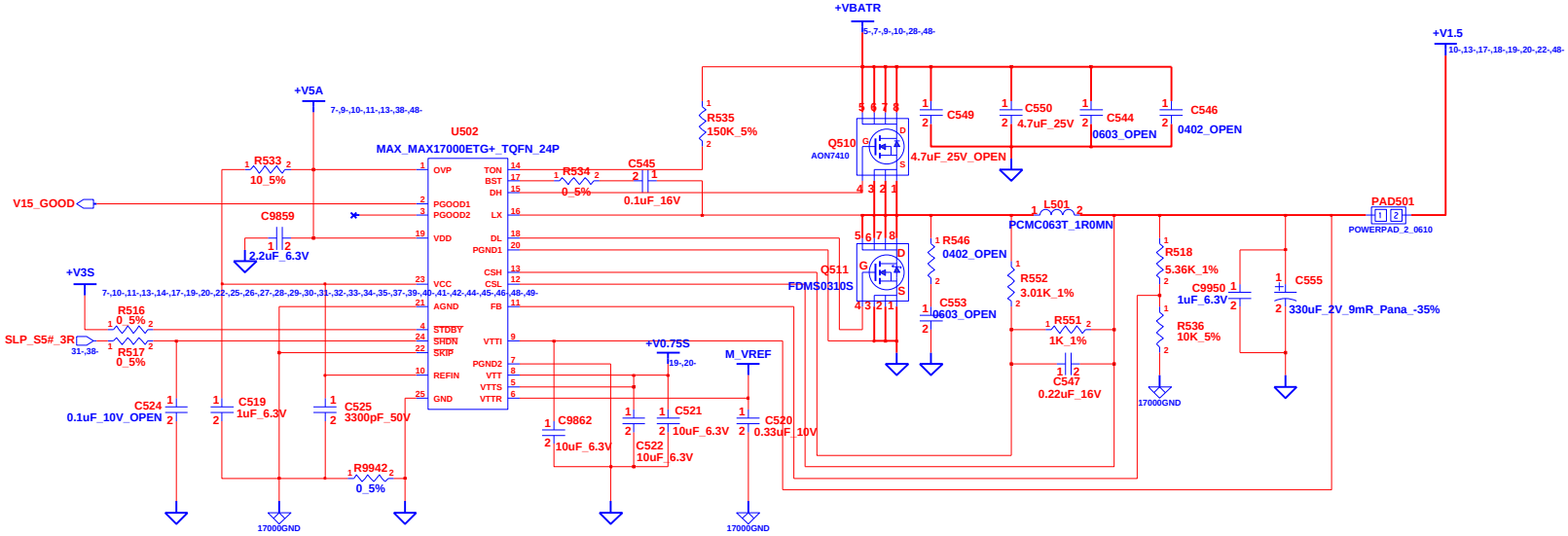

NOTE: DDR2 REGULATOR

INVENTEC			
TITLE: VV10AU2 DDR2 POWER			
SIZE: A3	CODE: CS	DOC. NUMBER: MTR	REV: A01
CHANGE by	11-Mar-2010	SHEET 12 OF 57	

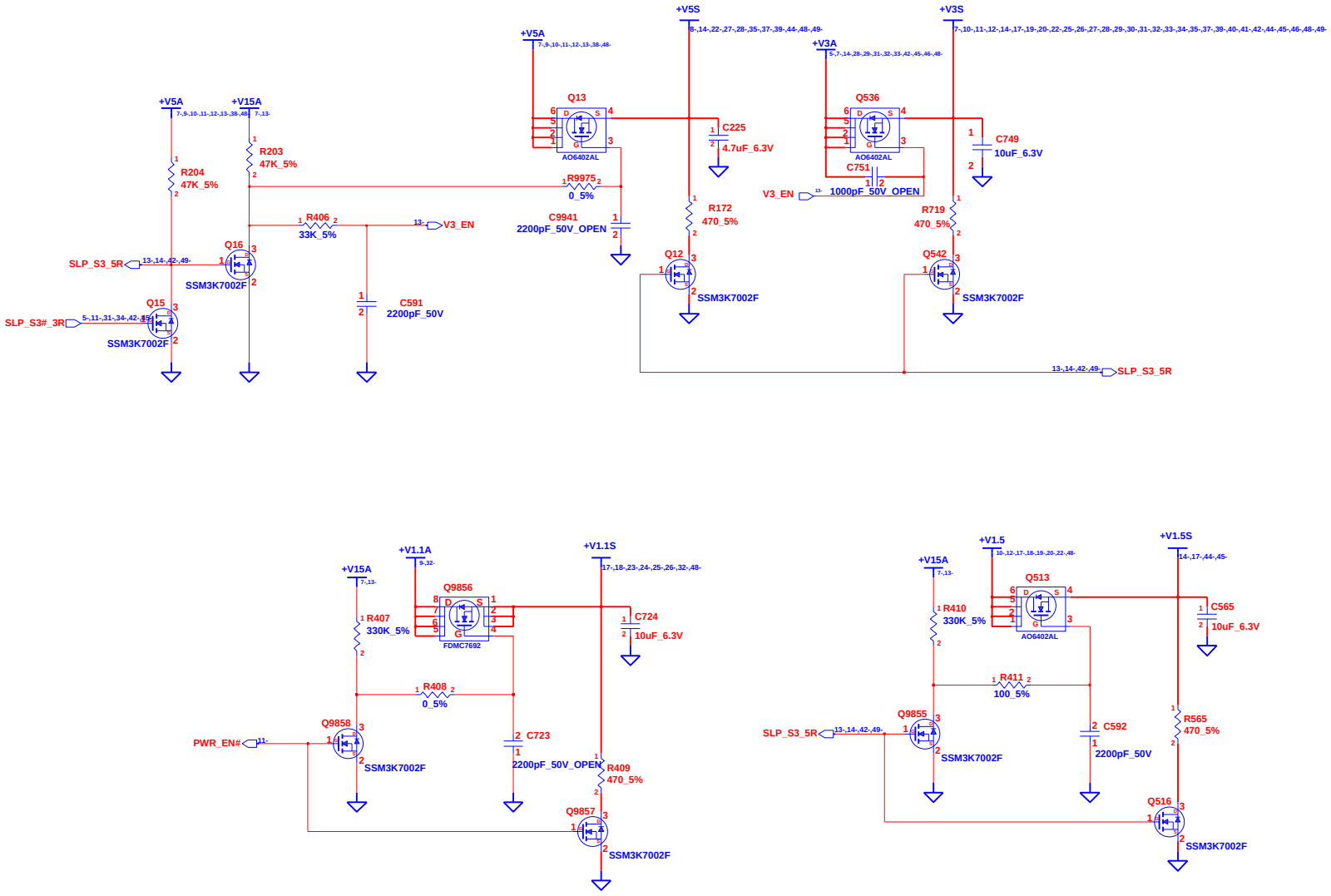

INVENTEC

TITLE
VV10AU2
POWER(Sleep)

SIZE	CODE	DOC. NUMBER	REV
A3	CS	MTR	A01

CHANGE by | 11-Mar-2010

SHEET 13 OF 57

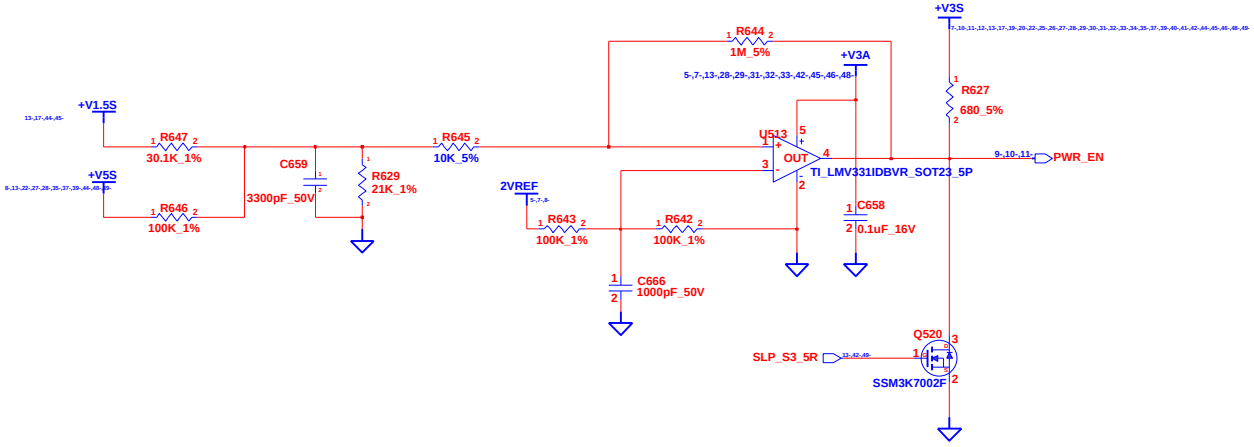

INVENTEC

TITLE
VV10AU2
POWER(Sequence)

SIZE	CODE	DOC. NUMBER	REV
A3	CS	*MTR*	*A01*

CHANGE by | *11-Mar-2010*

SHEET **14** OF **57**

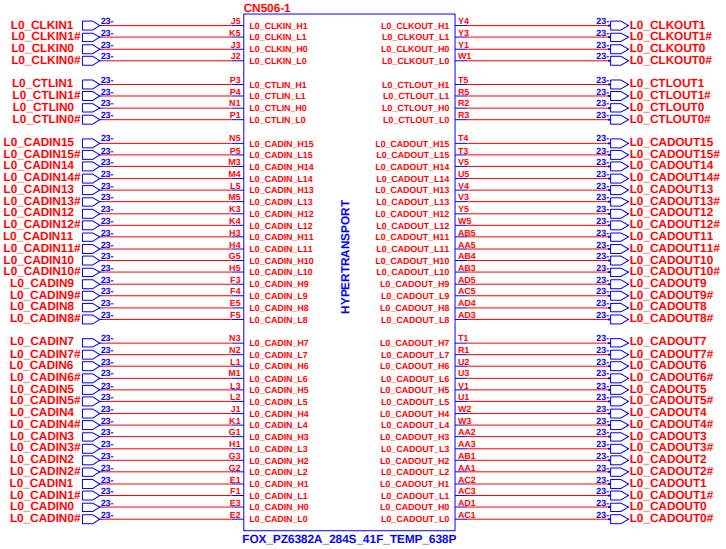

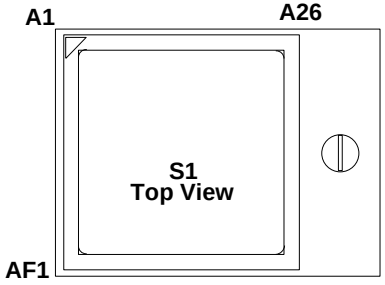

Layout: Add stitching caps if crossing plane split.

INVENTEC			
TITLE VV10AU2 CPU-1			
SIZE A3	CODE CS	DOC. NUMBER MTR	REV A01
CHANGE by	11-Mar-2010	SHEET 15 OF 57	

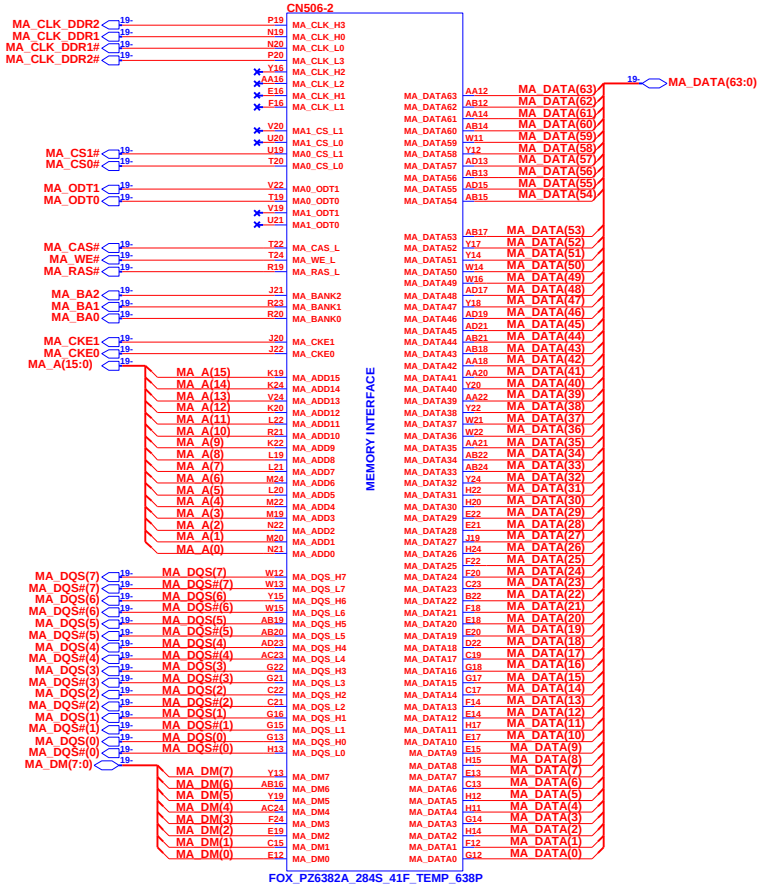

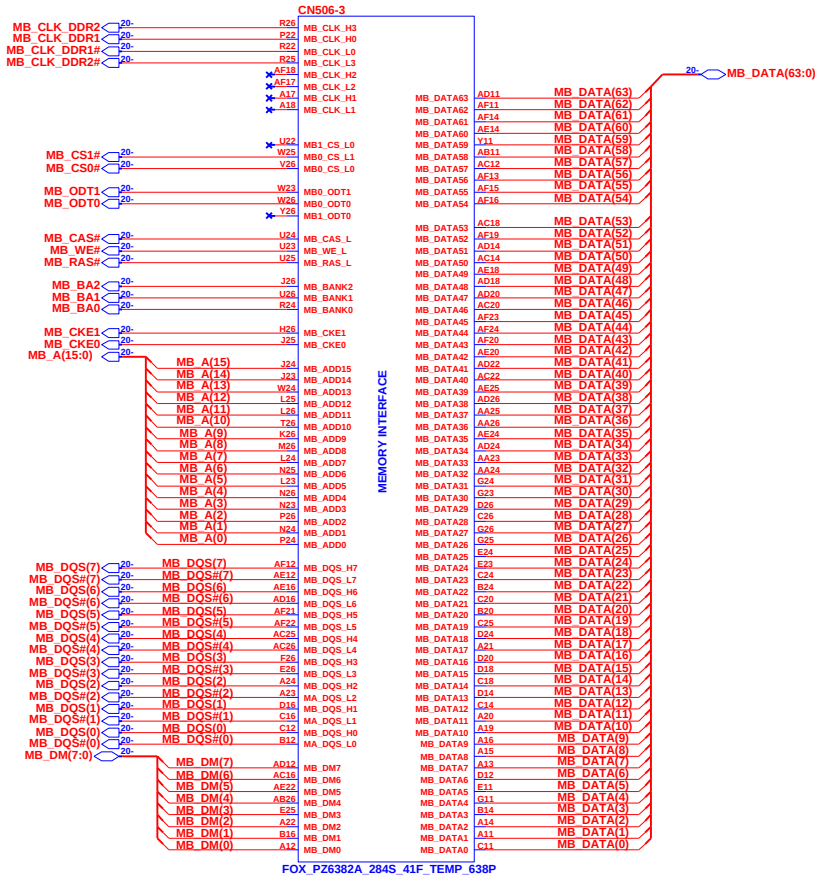

INVENTEC

TITLE
VV10AU2
CPU-2

SIZE	CODE	DOC. NUMBER	REV
A3	CS	MTR	A01

CHANGE by 11-Mar-2010

SHEET 16 OF 57

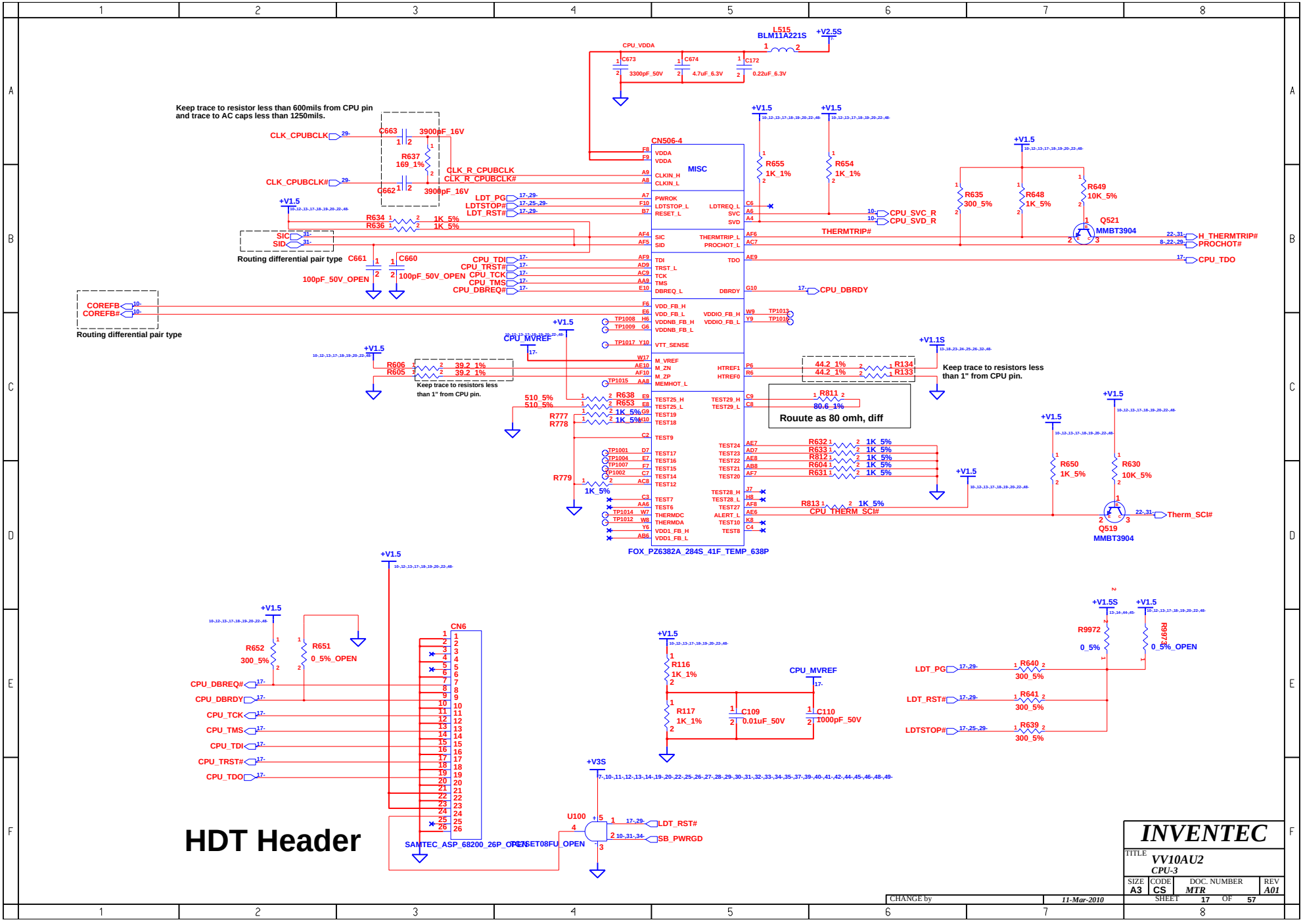
HDT Header
CN506-4
FOX_PZ6382A_284S_41F_TEMP_638P
SAMTEC_ASP_68200_26P_OPEN
CN6
Keep trace to resistor less than 600mils from CPU pin and trace to AC caps less than 1250mils.
Routing differential pair type
Keep trace to resistors less than 1" from CPU pin.
Rouute as 80 omh, diff
CPU_VDDA
CLK_CPUBCLK
CLK_CPUBCLK#
CLK_R_CPUBCLK
CLK_R_CPUBCLK#
LDT_PG
LDTSTOP#
LDT_RST#
CPU_TDI
CPU_TRST#
CPU_TCK
CPU_TMS
CPU_DBREQ#
CPU_DBRDY
CPU_SVC_R
CPU_SVD_R
THERMTRIP#
H_THERMTRIP#
PROCHOT#
CPU_TDO
CPU_MVREF
CPU_THERM_SCI#
Therm_SCI#
SB_PWRGD
COREFB
COREFB#
SIC
SID
+V1.5
+V2.5S
+V1.1S
+V3S
+V1.5S
L515
BLM11A221S
Q521
MMBT3904
Q519
MMBT3904
U100
NC7SZ08FU_OPEN
INVENTEC
TITLE
VV10AU2
CPU-3
SIZE A3
CODE CS
DOC. NUMBER MTR
REV A01
SHEET 17 OF 57
CHANGE by
11-Mar-2010

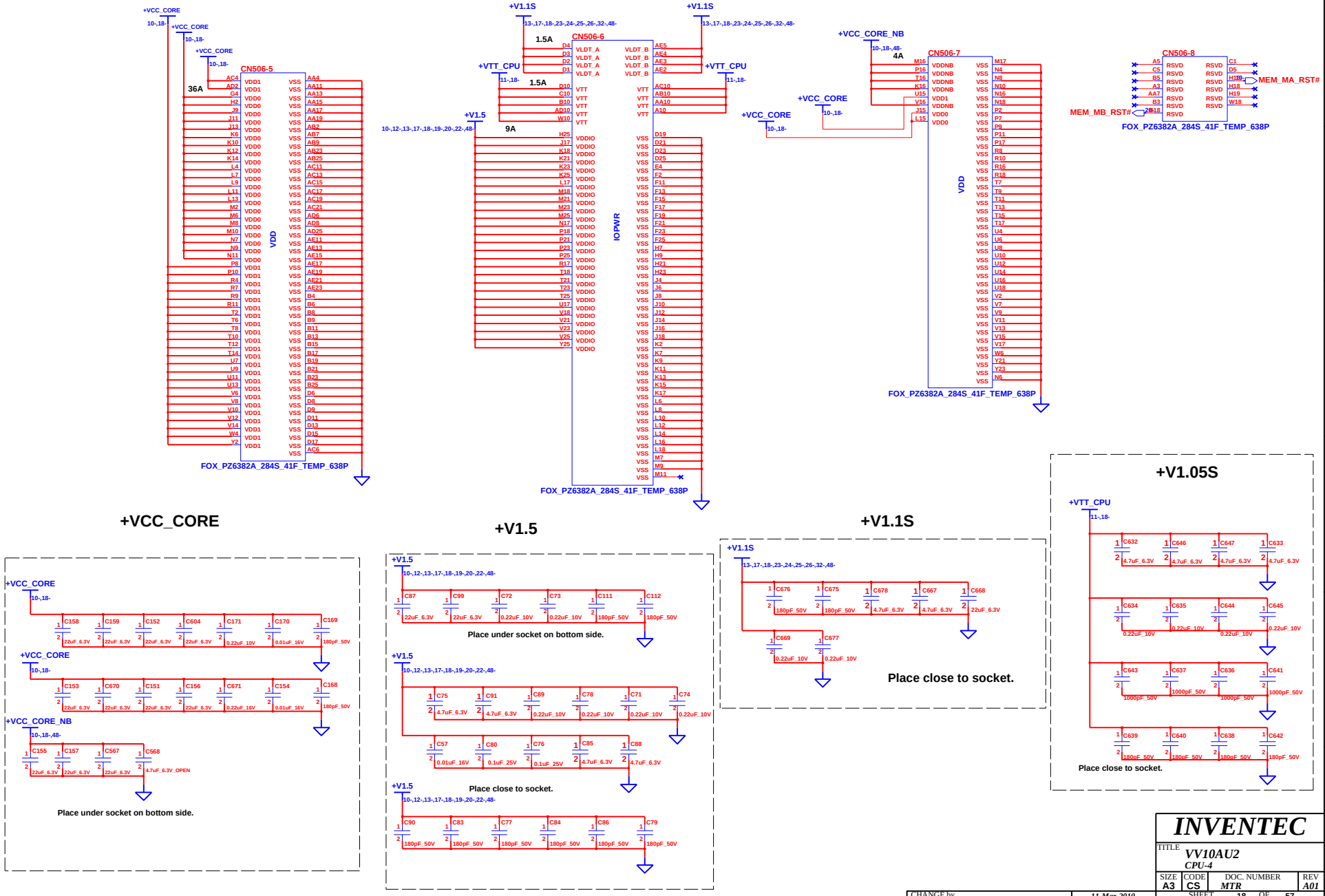

INVENTEC			
TITLE VV10AU2 CPU-4			
SIZE A3	CODE CS	DOC. NUMBER MTR	REV A01
CHANGE by	11-Mar-2010	SHEET 18 OF 57	

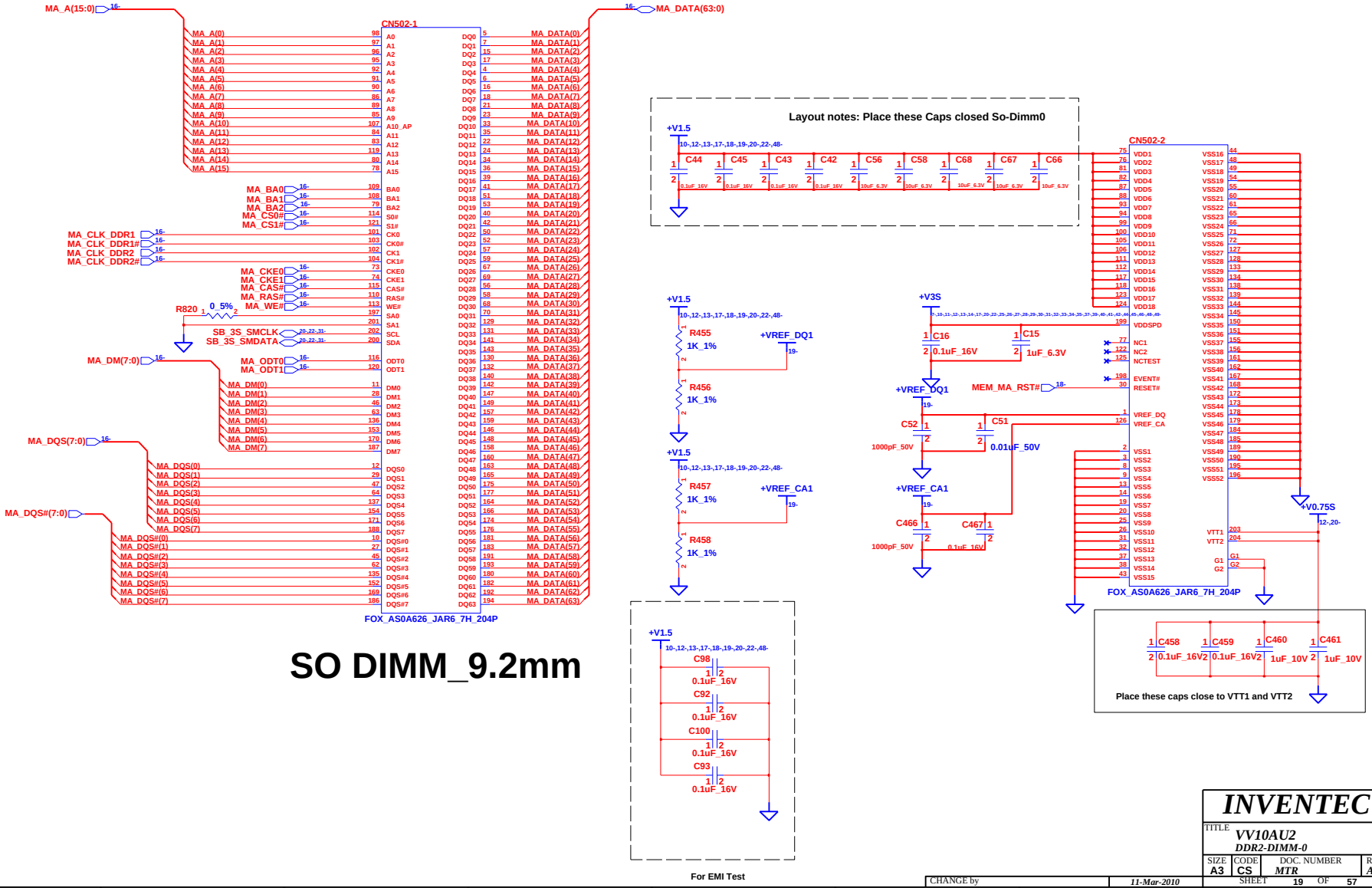

SO DIMM_9.2mm

INVENTEC			
TITLE VV10AU2 DDR2-DIMM-0			
SIZE A3	CODE CS	DOC. NUMBER MTR	REV A01
CHANGE by		11-Mar-2010	SHEET 19 OF 57

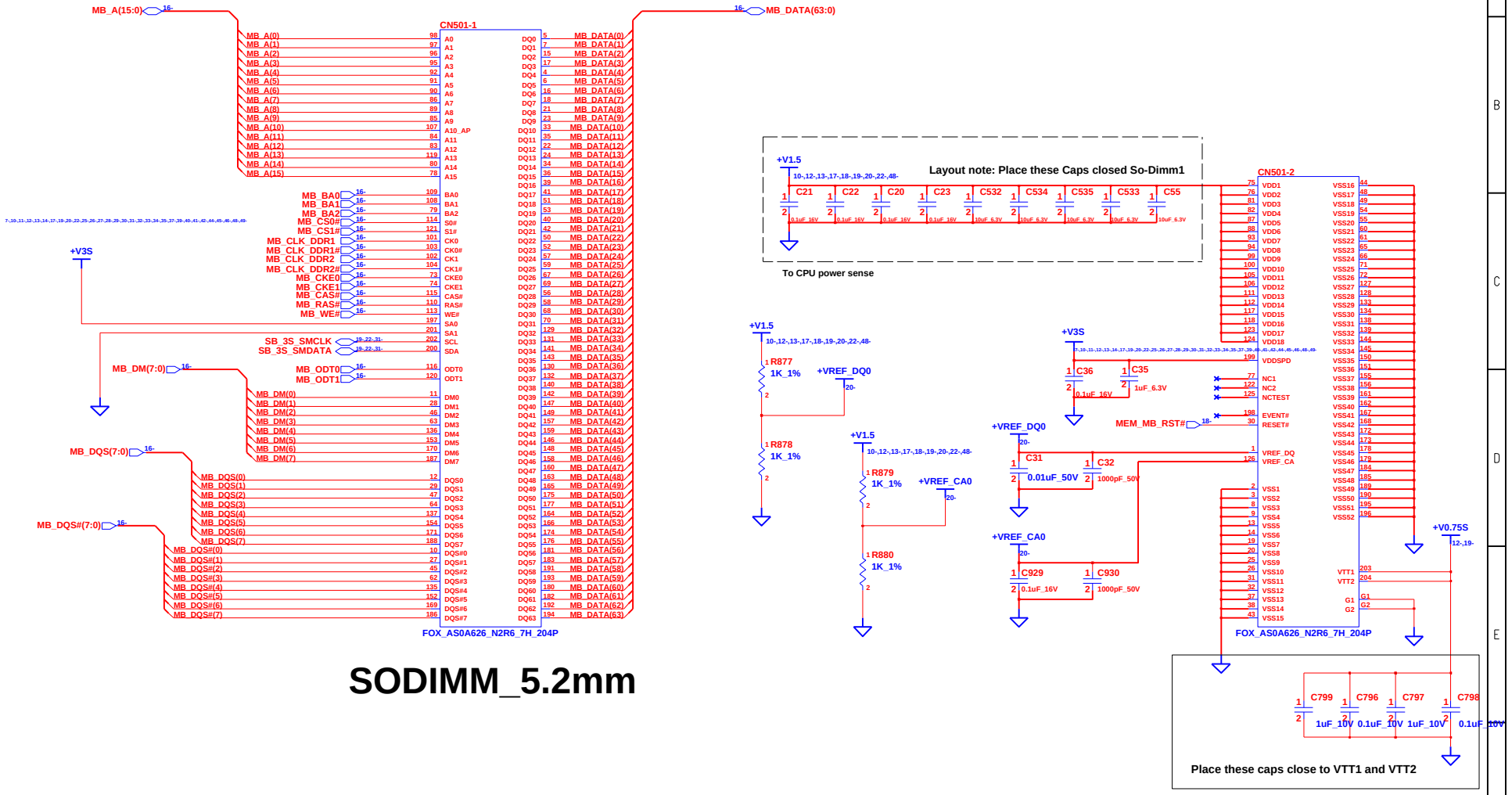

SODIMM_5.2mm

INVENTEC

TITLE VV10AU2
DDR2-DIMM-1

SIZE	CODE	DOC. NUMBER	REV
A3	CS	MTR	A01

CHANGE by 11-Mar-2010 SHEET 20 OF 57

1	2	3	4	5	6	7	8

A B C D E F

CHANGE by | 11-Mar-2010

INVENTEC

TITLE
VV10AU2
DDR2-DAMPING

SIZE	CODE	DOC. NUMBER	REV
A3	CS	*MTR*	*A01*

SHEET 21 OF 57

1 2 3 4 5 6 7 8

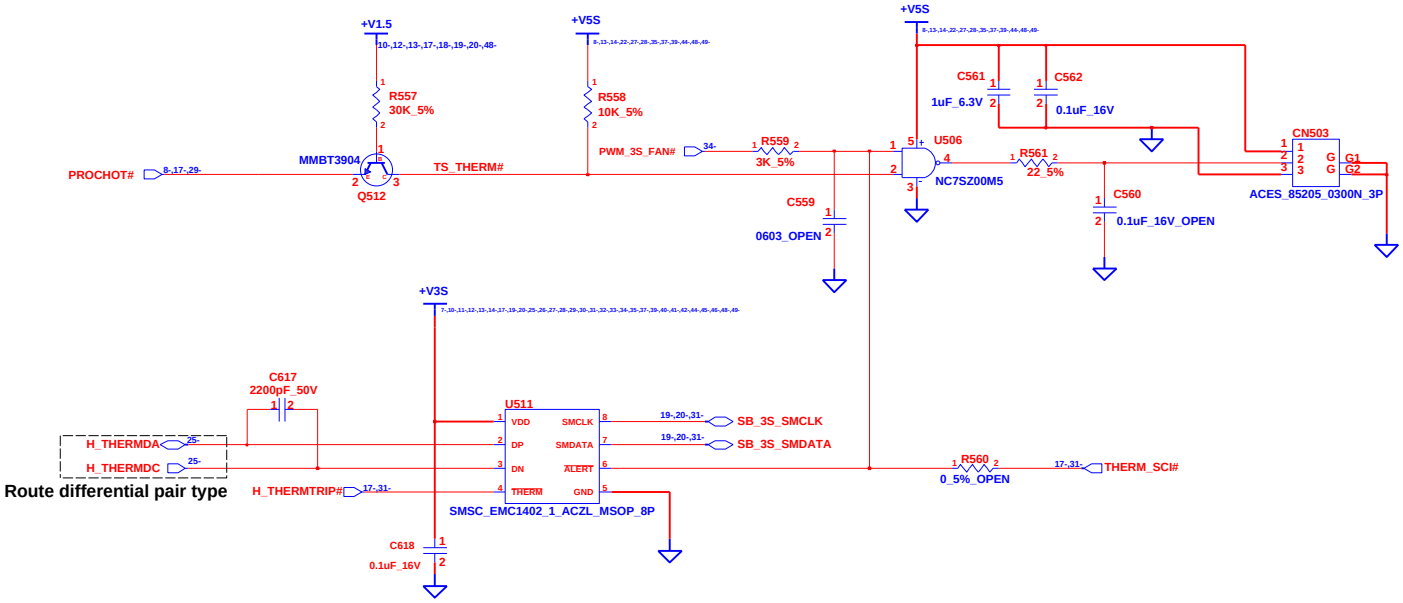

LAYOUT Note: Put the thermal sensor close to CPU.

INVENTEC			
TITLE VV10AU2 THERMAL & FAN CONTROLLER			
SIZE A3	CODE CS	DOC. NUMBER MTR	REV A01
CHANGE by	11-Mar-2010	SHEET 22 OF 57	

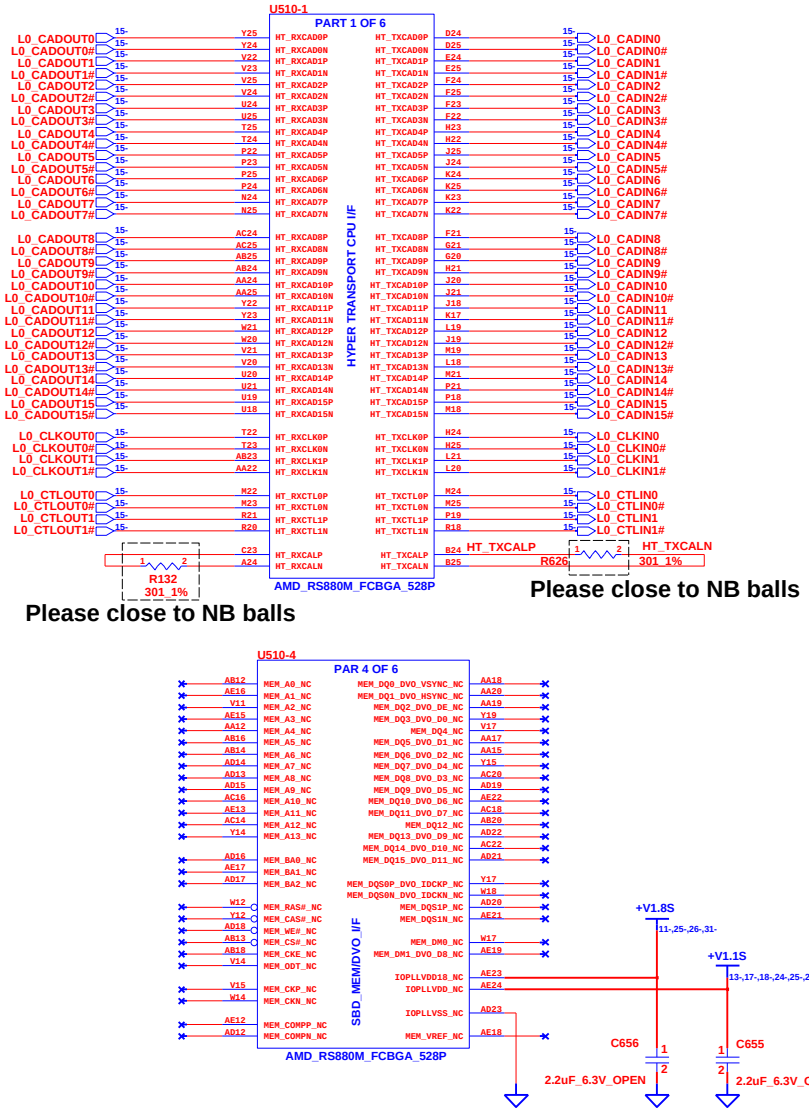

INVENTEC			
TITLE VV10AU2 RS780-1			
SIZE A3	CODE CS	DOC. NUMBER MTR	REV A01
CHANGE by		11-Mar-2010	SHEET 23 OF 57

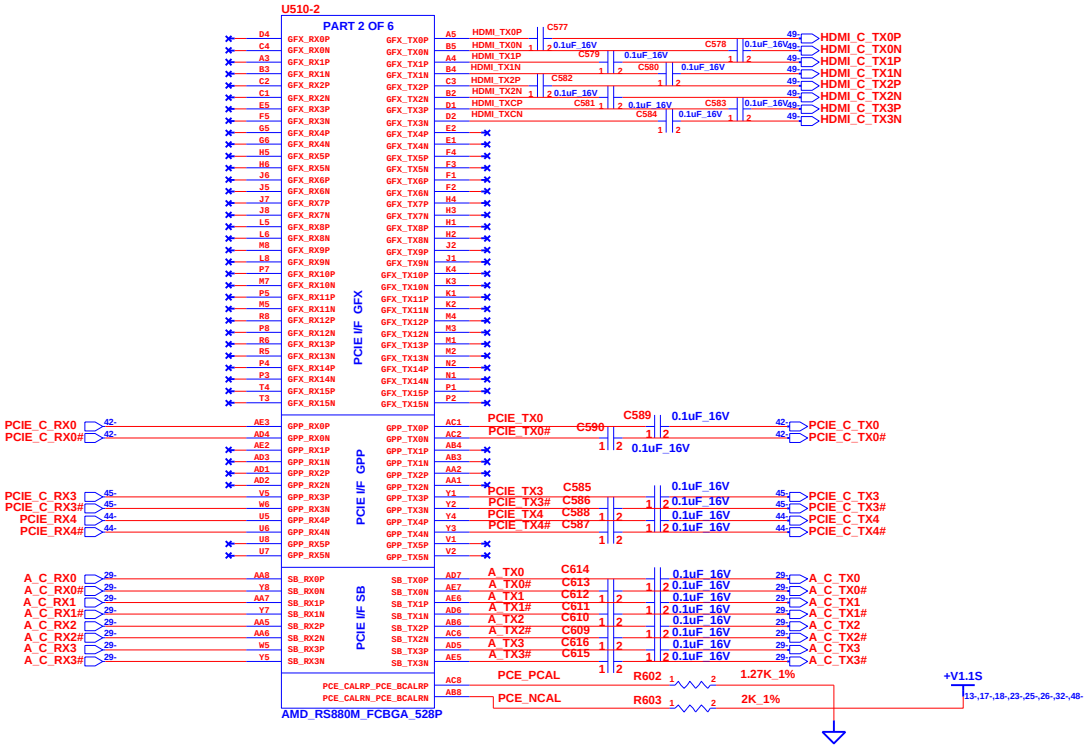

INVENTEC			
TITLE VV10AU2 RS780-2			
SIZE A3	CODE CS	DOC. NUMBER MTR	REV A01
		SHEET 24 OF 57	

11-Mar-2010

CHANGE by

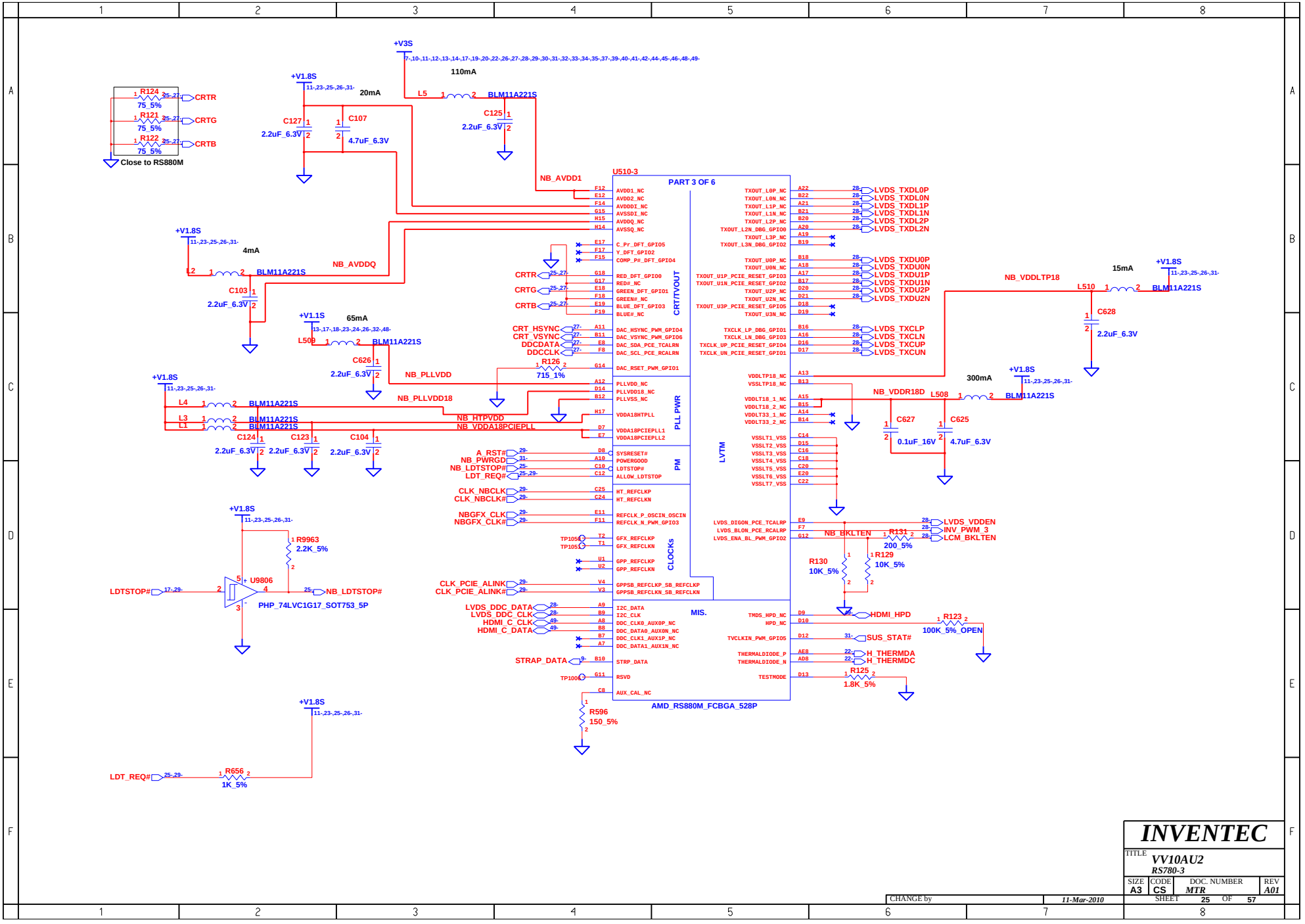

INVENTEC

TITLE VV10AU2
RS780-3

SIZE	CODE	DOC. NUMBER	REV
A3	CS	MTR	A01

CHANGE by | 11-Mar-2010 | SHEET 25 OF 57

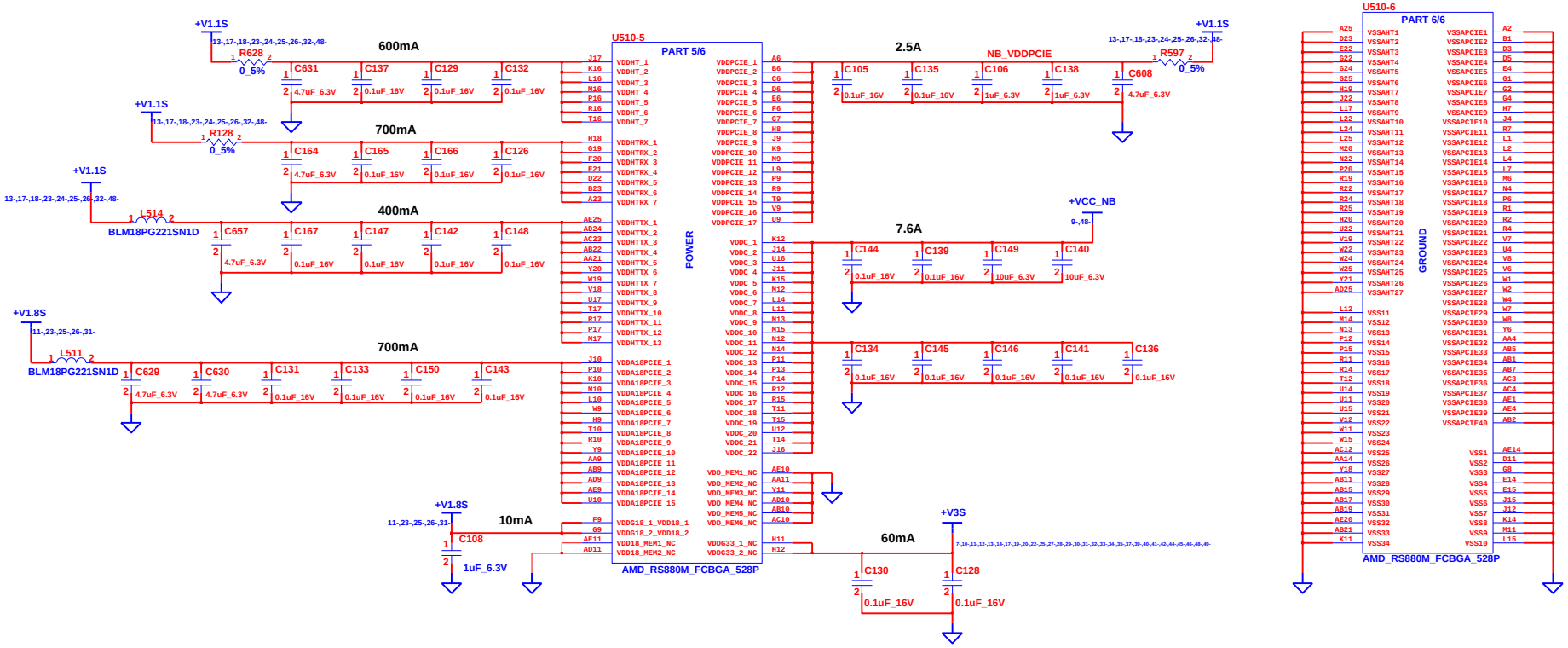

INVENTEC

TITLE
VV10AU2
RS780-4

SIZE	CODE	DOC. NUMBER	REV
A3	CS	MTR	A01

CHANGE by | 11-Mar-2010

SHEET 26 OF 57

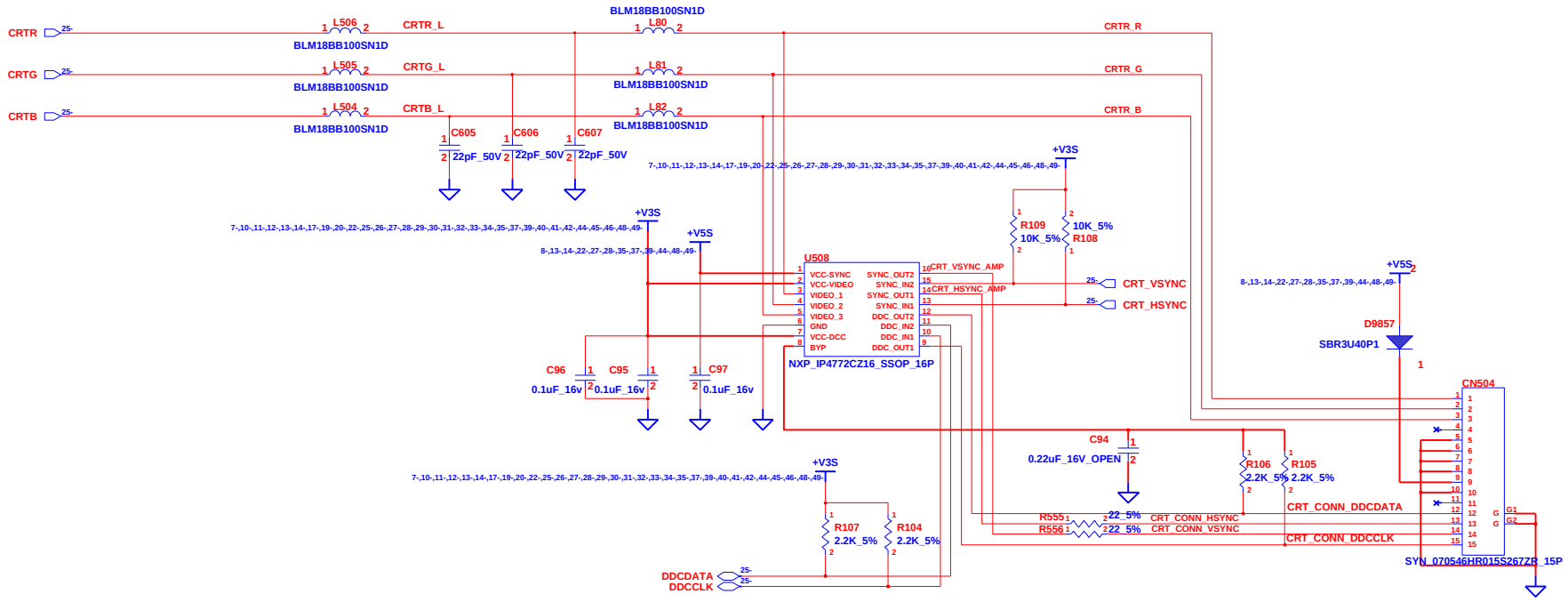

INVENTEC

TITLE
VV10AU2
CRT

SIZE	CODE	DOC. NUMBER	REV
A3	CS	MTR	A01

CHANGE by 11-Mar-2010

SHEET 27 OF 57

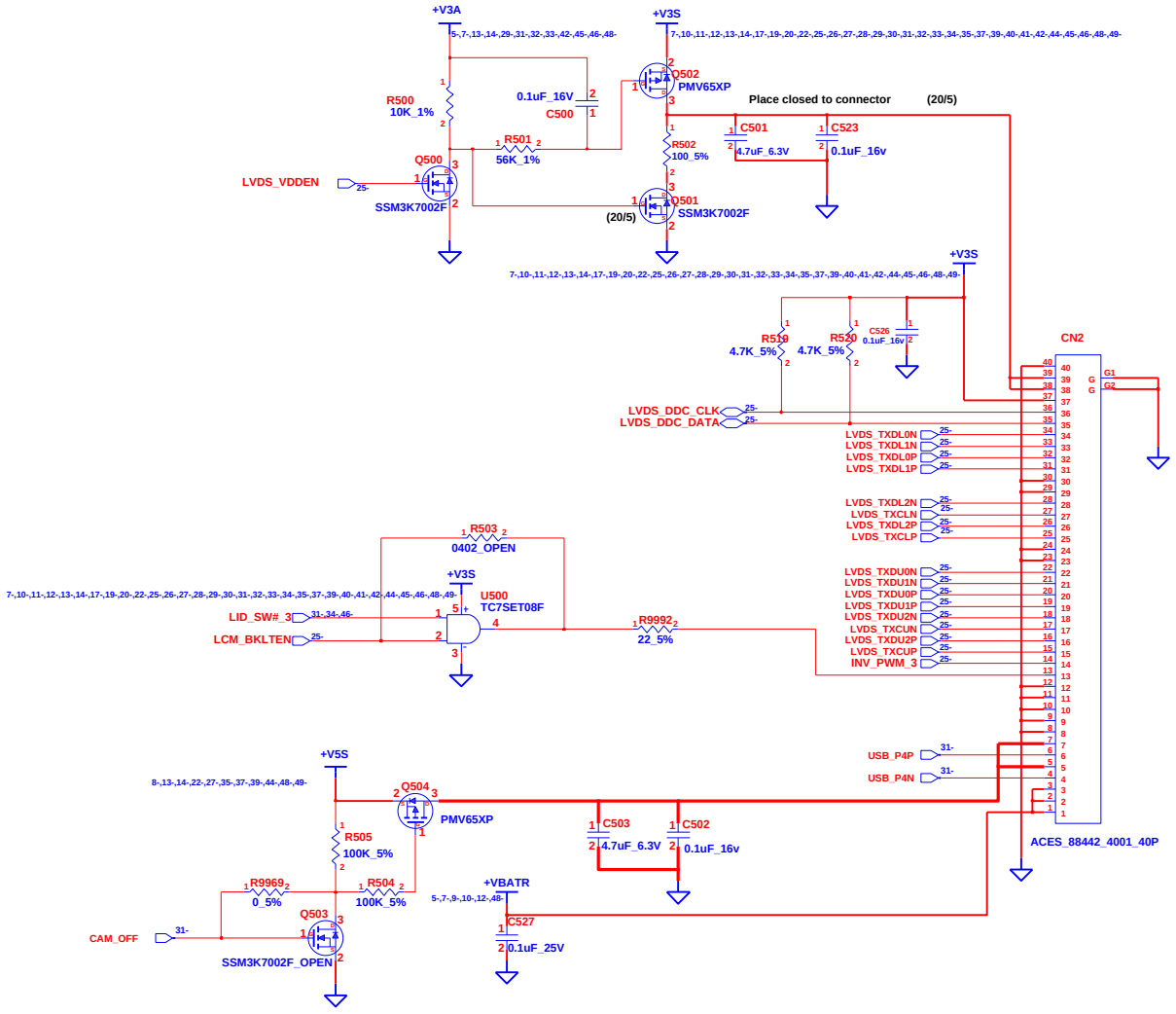

INVENTEC			
TITLE VV10AU2 LCD CONN & WEBCAM CONN			
SIZE A3	CODE CS	DOC. NUMBER MTR	REV A01
CHANGE by		11-Mar-2010	SHEET 28 OF 57

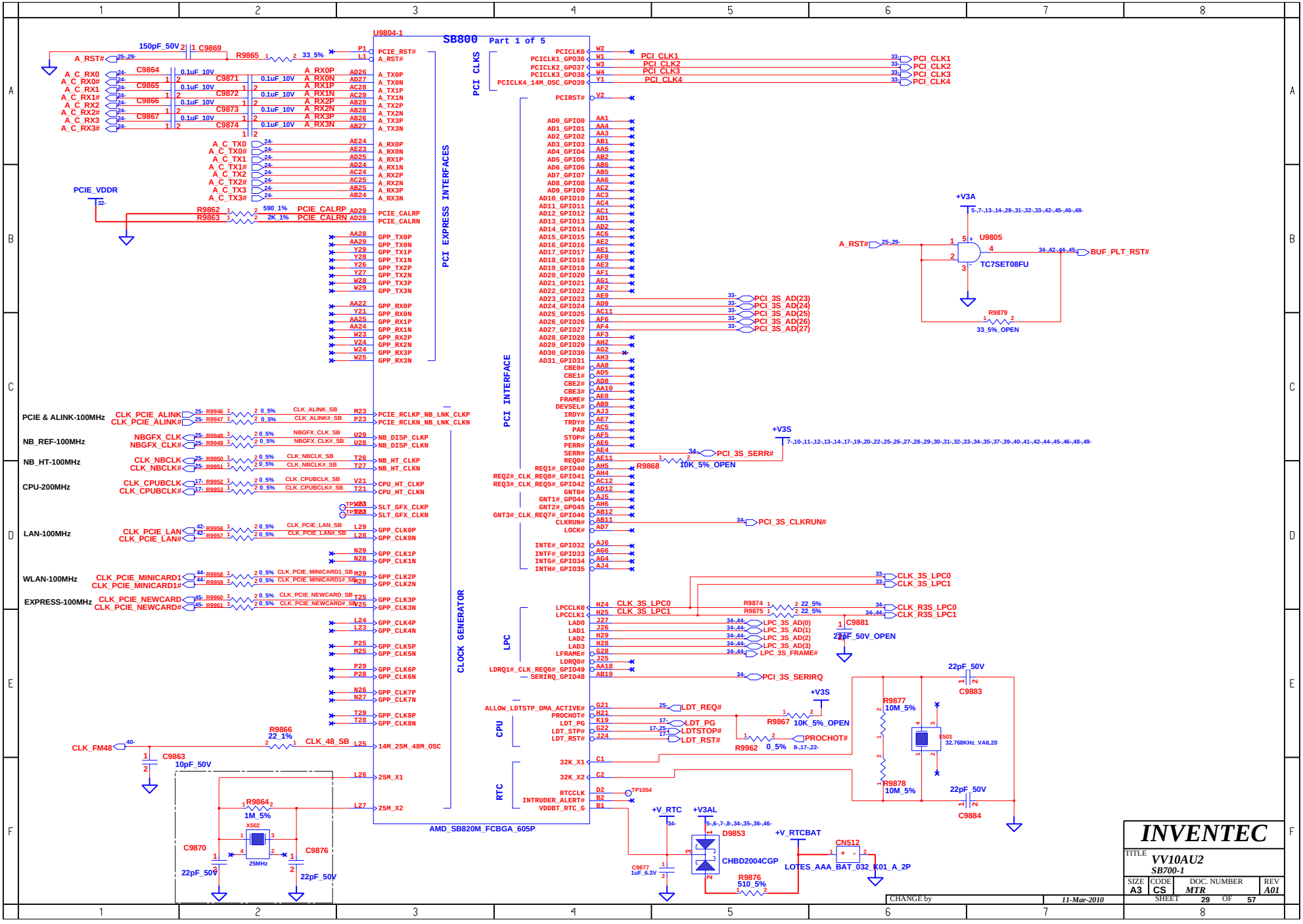
SB800 Part 1 of 5
U9804-1
AMD_SB820M_FCBGA_605P
PCI CLKS
PCI EXPRESS INTERFACES
PCI INTERFACE
CLOCK GENERATOR
LPC
CPU
RTC
PCIE & ALINK-100MHz
NB_REF-100MHz
NB_HT-100MHz
CPU-200MHz
LAN-100MHz
WLAN-100MHz
EXPRESS-100MHz
PCIE_VDDR
+V3A
+V3S
+V_RTC
+V3AL
+V_RTCBAT
U9805
TC7SET08FU
BUF_PLT_RST#
PCI_3S_AD(23)
PCI_3S_AD(24)
PCI_3S_AD(25)
PCI_3S_AD(26)
PCI_3S_AD(27)
PCI_3S_SERR#
PCI_3S_CLKRUN#
PCI_3S_SERIRQ
LPC_3S_AD(0)
LPC_3S_AD(1)
LPC_3S_AD(2)
LPC_3S_AD(3)
LPC_3S_FRAME#
CLK_3S_LPC0
CLK_3S_LPC1
CLK_R3S_LPC0
CLK_R3S_LPC1
LDT_REQ#
LDT_PG
LDTSTOP#
LDT_RST#
PROCHOT#
X503
32.768KHz_VAIL20
X502
25MHz
D9853
CHBD2004CGP
CN512
LOTES_AAA_BAT_032_K01_A_2P
INVENTEC
VV10AU2
SB700-1
SIZE A3
CODE CS
DOC. NUMBER MTR
REV A01
SHEET 29 OF 57
CHANGE by
11-Mar-2010

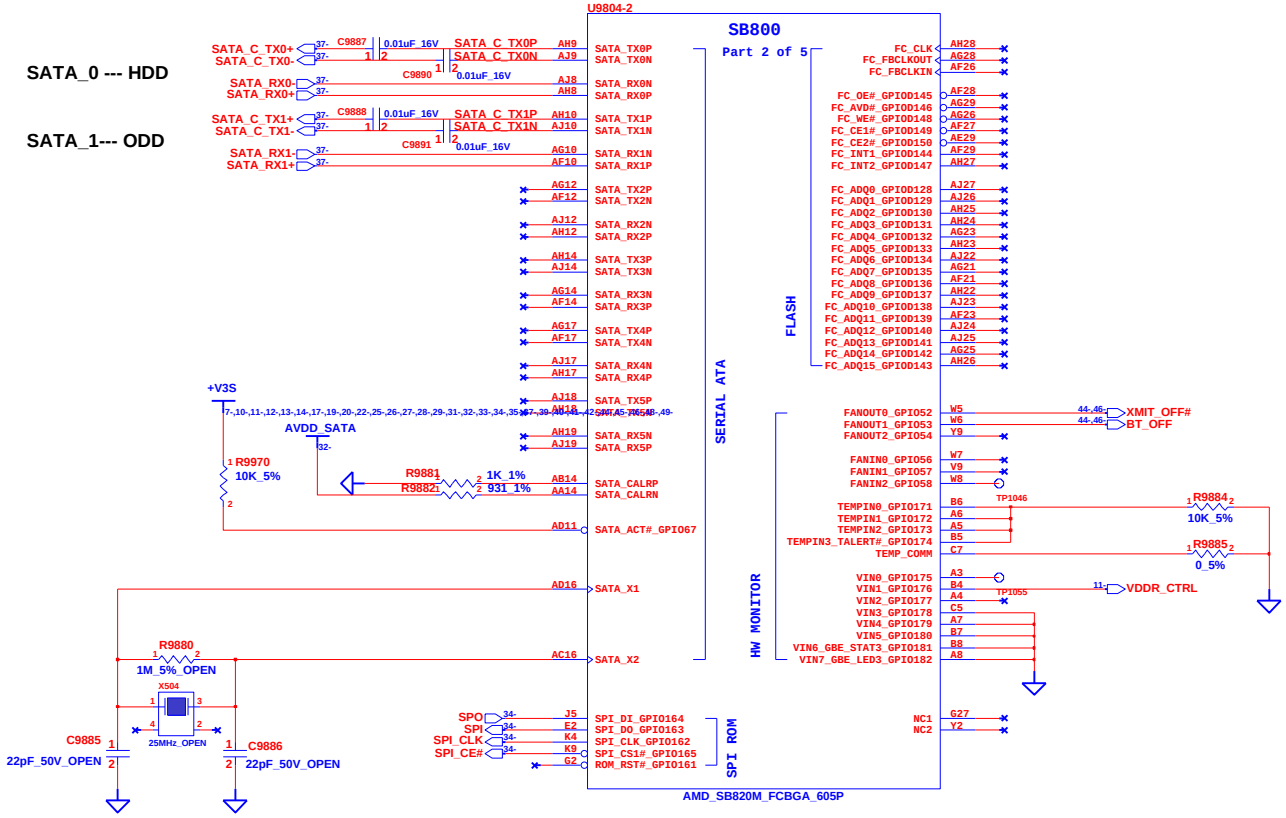

INVENTEC			
TITLE VV10AU2 SB700-2			
SIZE A3	CODE CS	DOC. NUMBER MTR	REV A01
CHANGE by	11-Mar-2010	SHEET 30 OF 57	

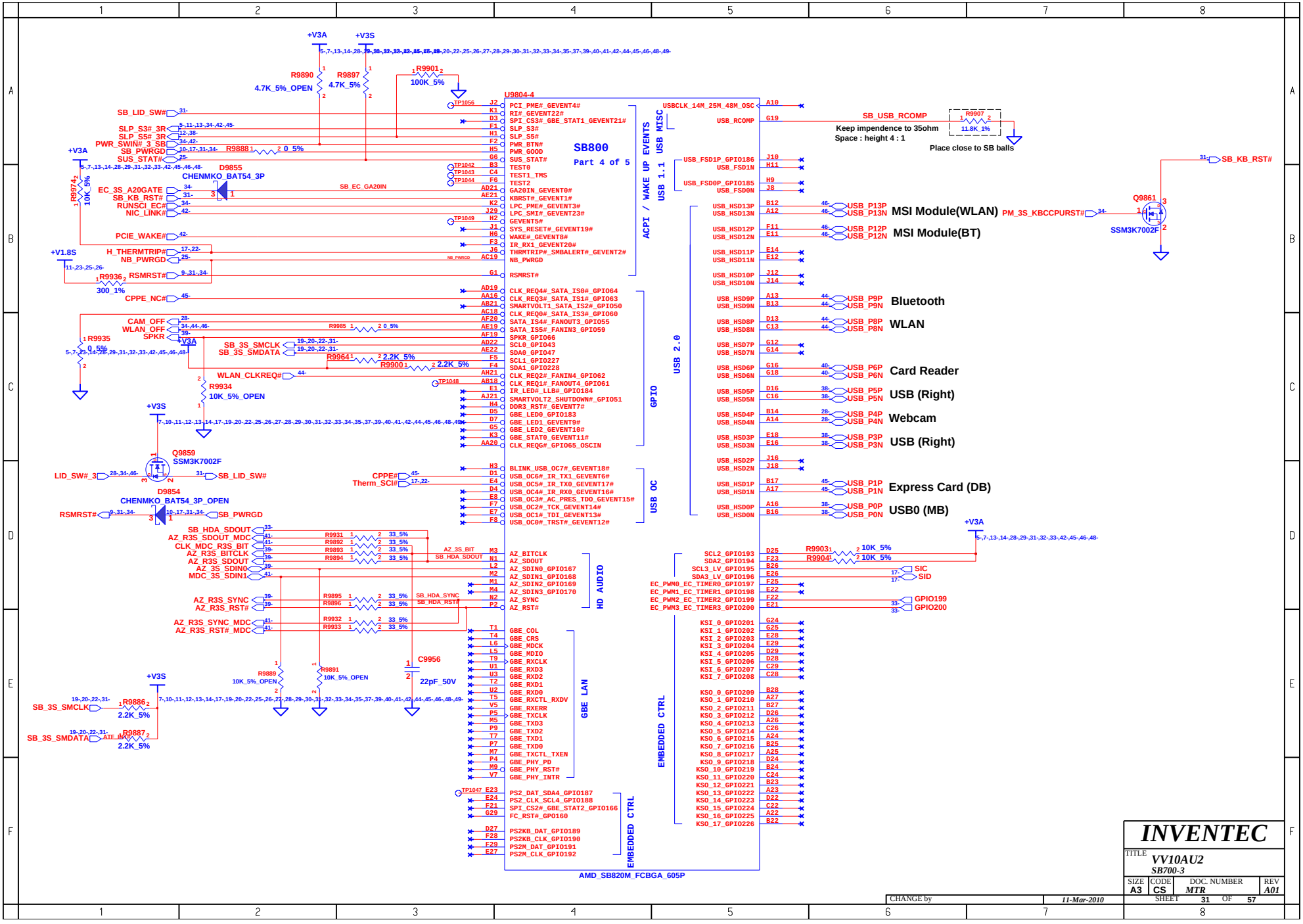
SB800
Part 4 of 5
U9804-4
AMD_SB820M_FCBGA_605P
ACPI / WAKE UP EVENTS
USB MISC
USB 1.1
USB 2.0
GPIO
USB OC
HD AUDIO
GBE LAN
EMBEDDED CTRL
SB_LID_SW#
SLP_S3#_3R
SLP_S5#_3R
PWR_SWIN#_3_SB
SB_PWRGD
SUS_STAT#
EC_3S_A20GATE
SB_KB_RST#
RUNSCI_EC#
NIC_LINK#
PCIE_WAKE#
H_THERMTRIP#
NB_PWRGD
RSMRST#
CPPE_NC#
CAM_OFF
WLAN_OFF
SPKR
SB_3S_SMCLK
SB_3S_SMDATA
WLAN_CLKREQ#
LID_SW#_3
CPPE#
Therm_SCI#
SB_HDA_SDOUT
AZ_R3S_SDOUT_MDC
CLK_MDC_R3S_BIT
AZ_R3S_BITCLK
AZ_R3S_SDOUT
AZ_3S_SDIN0
MDC_3S_SDIN1
AZ_R3S_SYNC
AZ_R3S_RST#
AZ_R3S_SYNC_MDC
AZ_R3S_RST#_MDC
SB_USB_RCOMP
Keep impendence to 350ohm
Space : height 4 : 1
Place close to SB balls
MSI Module(WLAN)
MSI Module(BT)
Bluetooth
WLAN
Card Reader
USB (Right)
Webcam
USB (Right)
Express Card (DB)
USB0 (MB)
SB_KB_RST#
PM_3S_KBCCPURST#
SSM3K7002F
CHENMKO_BAT54_3P
CHENMKO_BAT54_3P_OPEN
SIC
SID
GPIO199
GPIO200
INVENTEC
TITLE
VV10AU2
SB700-3
SIZE A3
CODE CS
DOC. NUMBER MTR
REV A01
SHEET 31 OF 57
CHANGE by
11-Mar-2010

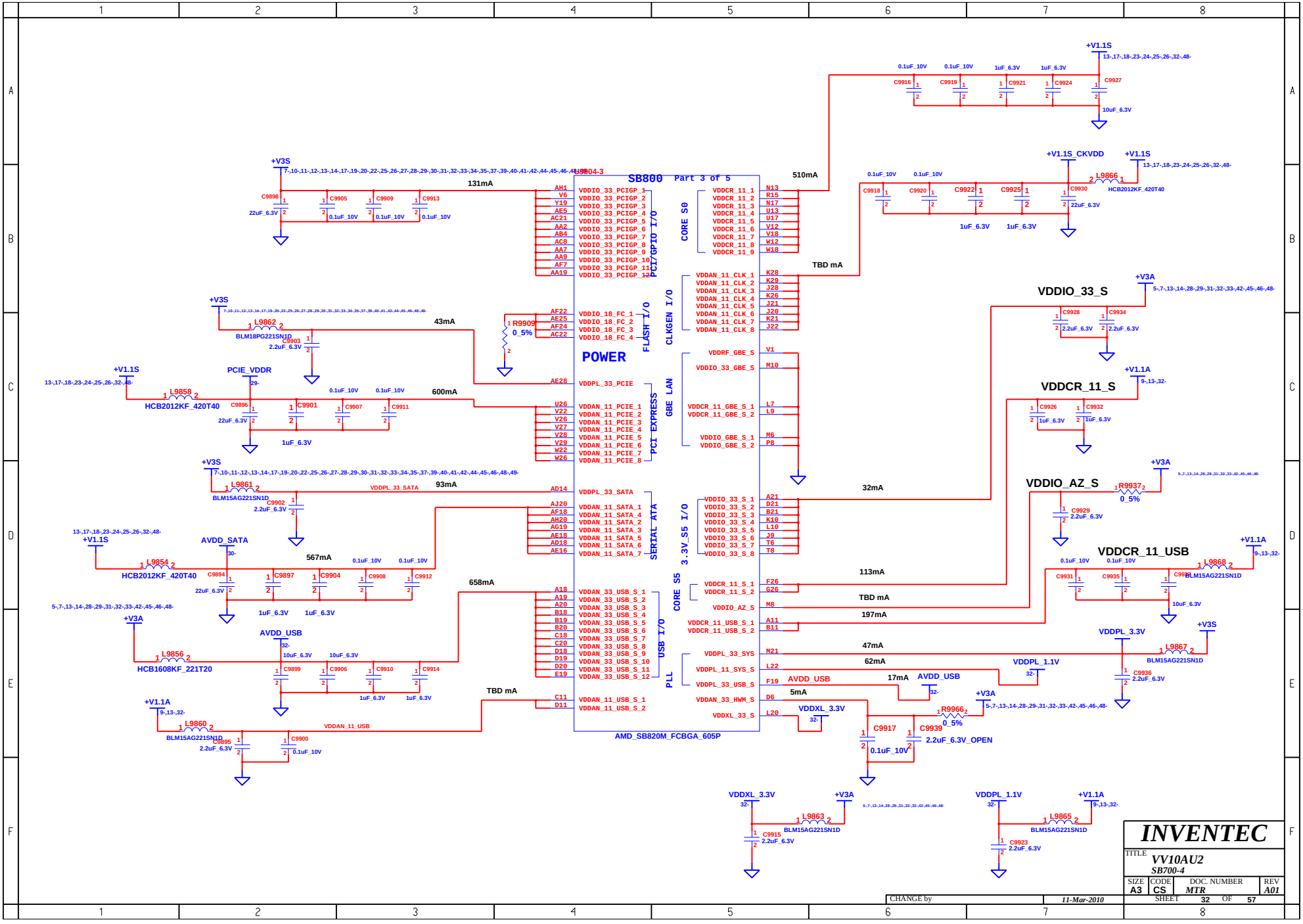
SB800 Part 3 of 5
POWER
AMD_SB820M_FCBGA_605P
PCI/GPIO I/O
FLASH I/O
CLKGEN I/O
PCI EXPRESS
GBE LAN
SERIAL ATA
3.3V SS I/O
CORE S5
USB I/O
PLL
CORE S0
+V3S
+V1.1S
+V3A
+V1.1A
+V1.1S_CKVDD
PCIE_VDDR
AVDD_SATA
AVDD_USB
VDDIO_33_S
VDDCR_11_S
VDDIO_AZ_S
VDDCR_11_USB
VDDPL_3.3V
VDDPL_1.1V
VDDXL_3.3V
VDDDPL_1.1V
510mA
TBD mA
131mA
43mA
600mA
93mA
32mA
567mA
658mA
113mA
197mA
47mA
62mA
17mA
5mA
INVENTEC
TITLE VV10AU2
SB700-4
SIZE A3
CODE CS
DOC. NUMBER MTR
REV A01
SHEET 32 OF 57
CHANGE by
11-Mar-2010

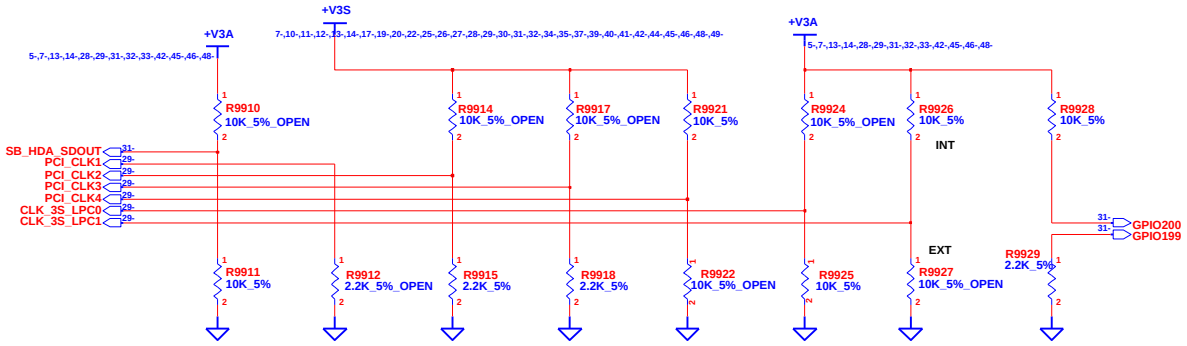

Required Straps:

	HDA_SDOUT	PCI_CLK1	PCI_CLK2	PCI_CLK3	PCI_CLK4	LPC_CLK0	LPC_CLK1	GPIO200 GPIO199
PULL HIGH	LOW POWER MODE (default)	ALLOW PCIE Gen2	Watchdog Timer Enabled	USE DEBUG STRAP	non_Fusion CLOCK MODE (default)	EC ENABLED	CLKGEN ENABLED (default)	ROM TYPE H, H = Reserved L, H = LPC ROM (default) H, L = SPI ROM L, L = FWH ROM
PULL LOW	PERFORMANCE MODE	FORCE PCIE Gen1 (default)	Watchdog Timer Disabled (default)	IGNORE DEBUG STRAP (default)	FUSION CLOCK MODE	EC DISABLED (default)	CLKGEN DISABLED	

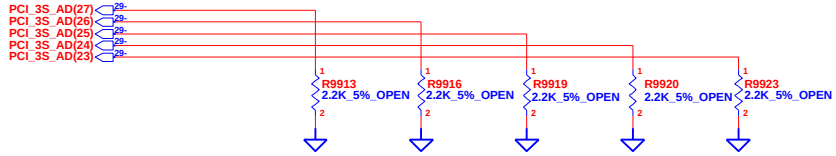

Debug Straps

SB800 HAS 15K INTERNAL PU FOR PCI_AD[27:23]

		PCI_3S_AD(27)	PCI_3S_AD(26)	PCI_3S_AD(25)	PCI_3S_AD(24)	PCI_3S_ AD(23)
PULL HIGH		USE PCI PLL (default)	DISABLE ILA AUTORUN (default)	USE FC PLL (default)	USE DEFAULT PCIE STRAPS (default)	DISABLE PCI MEM BOOT (default)
PULL LOW		BYPASS PCI PLL	ENABLE ILA AUTORUN	BYPASS FC PLL	USE EEPROM PCIE STRAPS	ENABLE PCI MEM BOOT

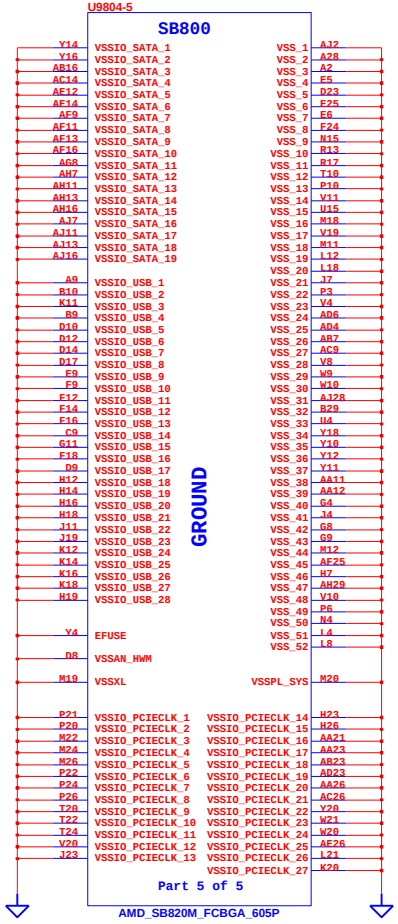

CHANGE by	11-Mar-2010	INVENTEC		
		TITLE VV10AU2		
		SIZE A3	CODE CS	DOC. NUMBER MTR	REV A01
		SHEET 33 OF 57		

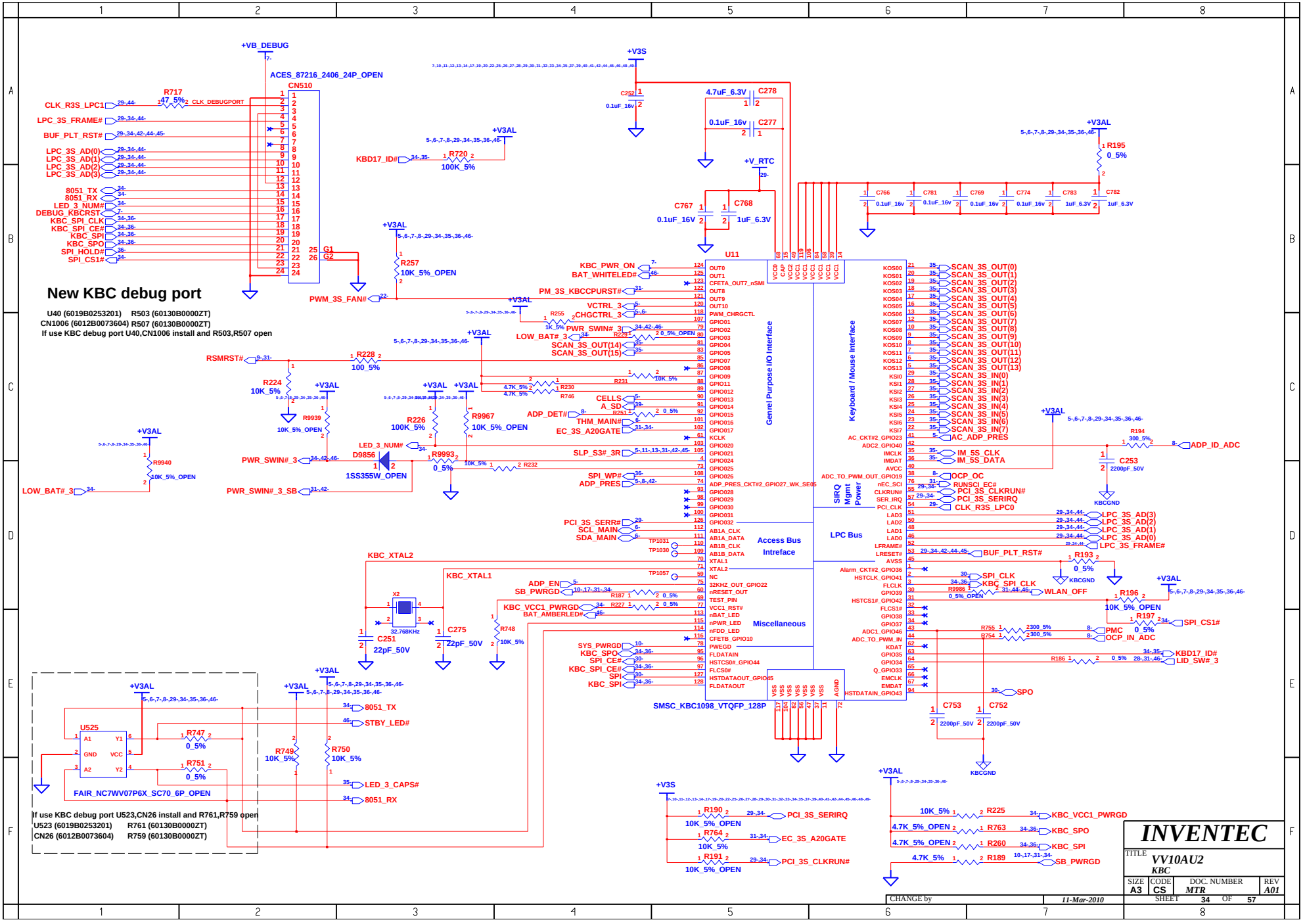
New KBC debug port
U40 (6019B0253201) R503 (60130B0000ZT)
CN1006 (6012B0073604) R507 (60130B0000ZT)
If use KBC debug port U40,CN1006 install and R503,R507 open
If use KBC debug port U523,CN26 install and R761,R759 open
U523 (6019B0253201) R761 (60130B0000ZT)
CN26 (6012B0073604) R759 (60130B0000ZT)
ACES_87216_2406_24P_OPEN
CN510
U11
SMSC_KBC1098_VTQFP_128P
Genrel Purpose I/O Interface
Keyboard / Mouse Interface
Access Bus Intreface
Miscellaneous
LPC Bus
SIRQ Mgmt Power
FAIR_NC7WV07P6X_SC70_6P_OPEN
INVENTEC
VV10AU2
KBC
SIZE A3
CODE CS
DOC. NUMBER MTR
REV A01
SHEET 34 OF 57
CHANGE by
11-Mar-2010

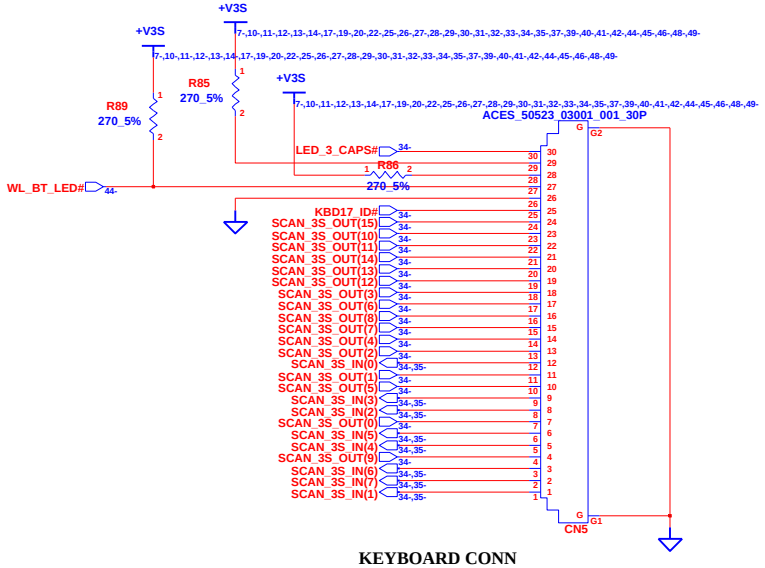

KEYBOARD CONN

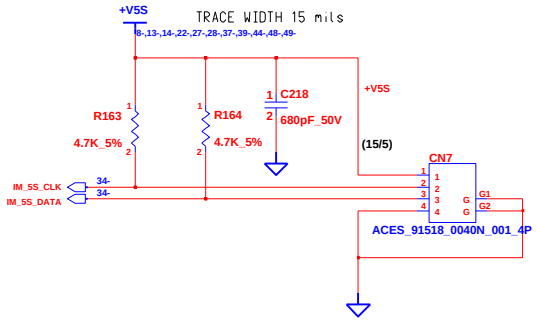

TOUCH PAD CNTR

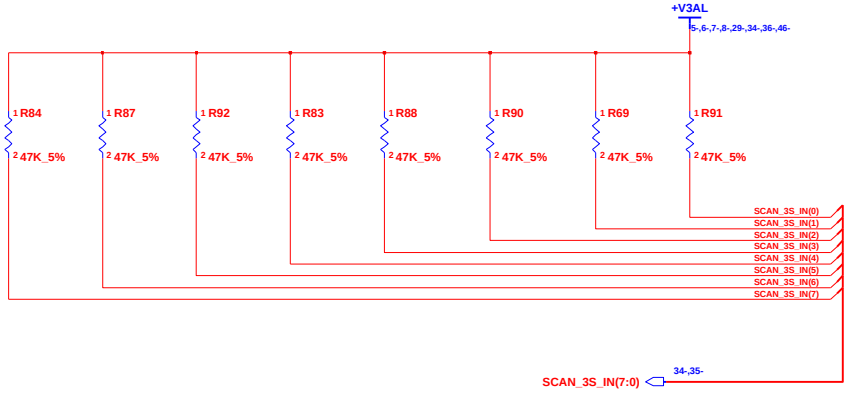

INVENTEC			
TITLE *VV10AU2* KB&TP CONN			
SIZE A3	CODE CS	DOC. NUMBER *MTR*	REV *A01*
CHANGE by		*11-Mar-2010*	SHEET 35 OF 57

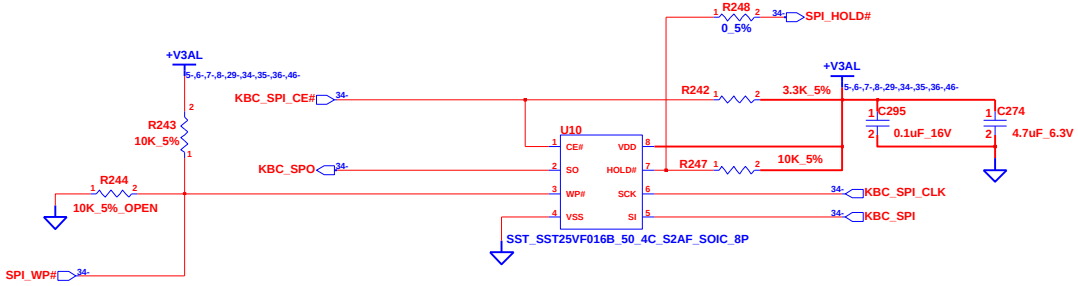

SPI Flash

INVENTEC			
TITLE VV10AU2 SPI			
SIZE A3	CODE CS	DOC. NUMBER MTR	REV A01
CHANGE by	11-Mar-2010	SHEET 36 OF 57	

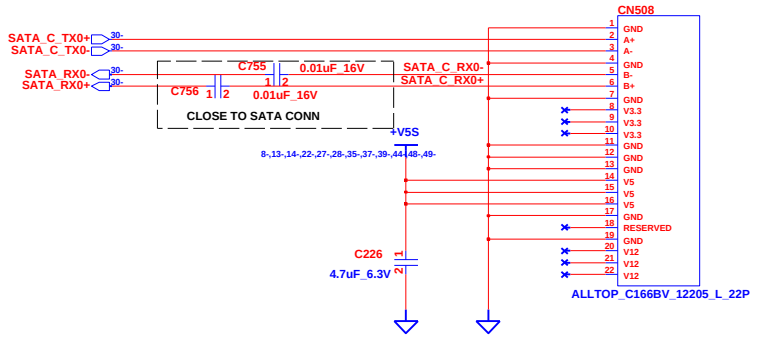

HDD CONNECTOR

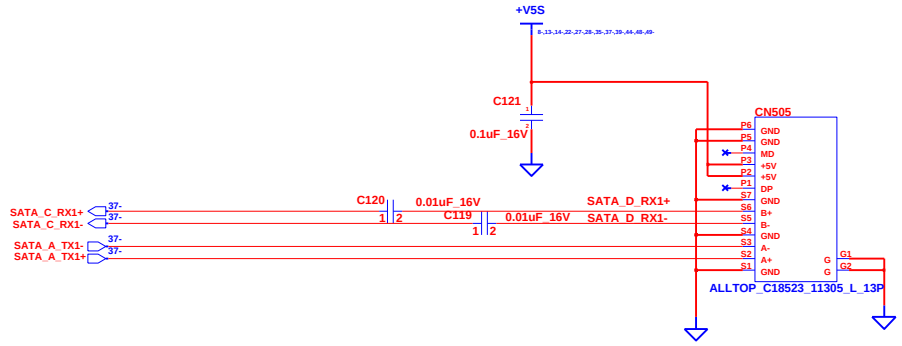

ODD SATA CONNECTOR

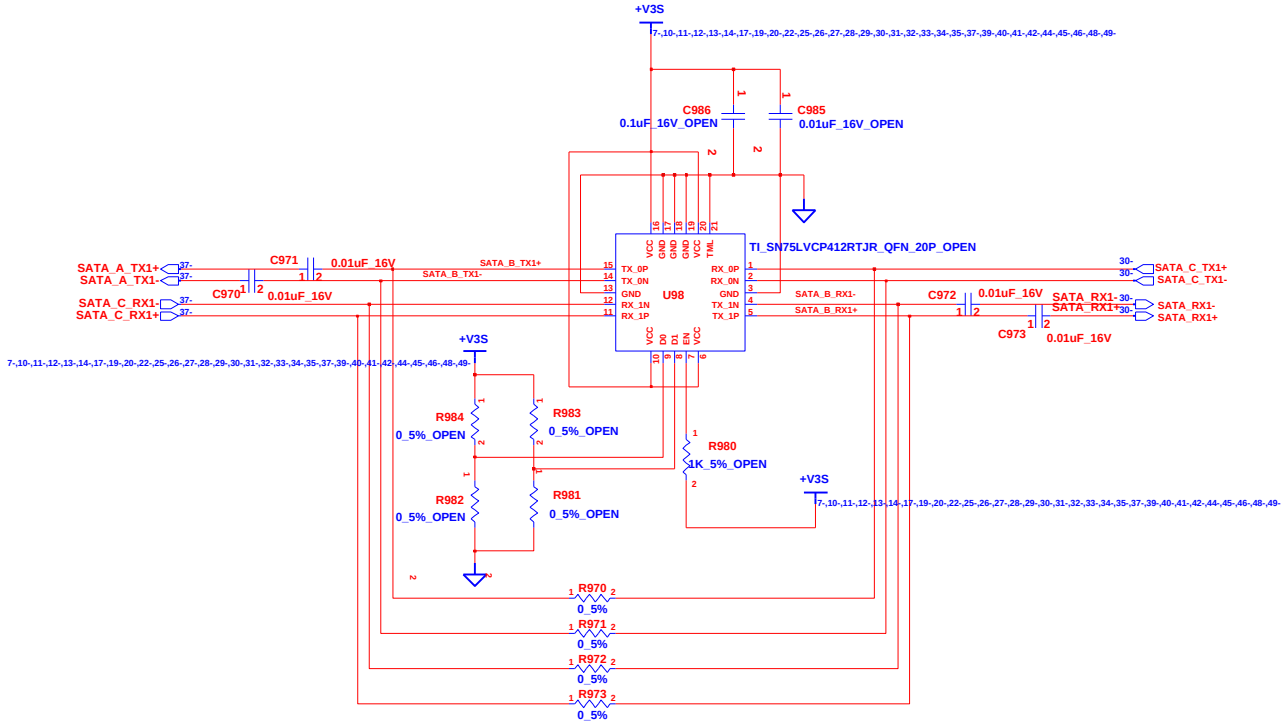

ODD SATA CONNECTOR

INVENTEC			
TITLE VV10AU2 HDD & ODD CONN			
SIZE A3	CODE CS	DOC. NUMBER MTR	REV A01
CHANGE by	11-Mar-2010	SHEET 37 OF 57	

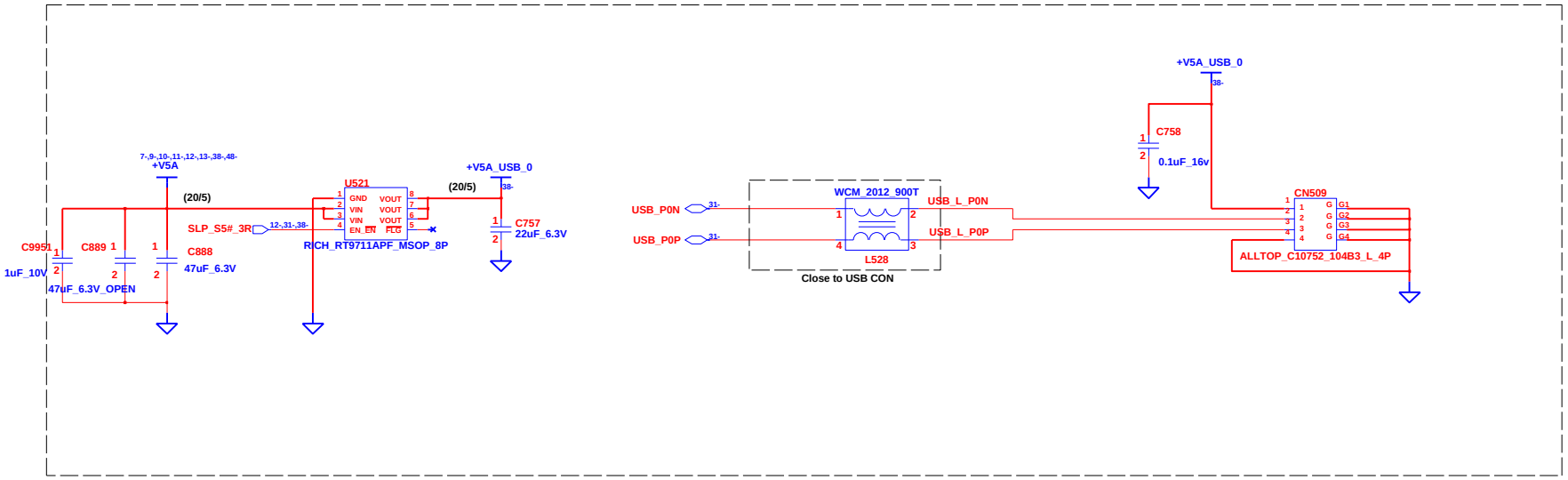

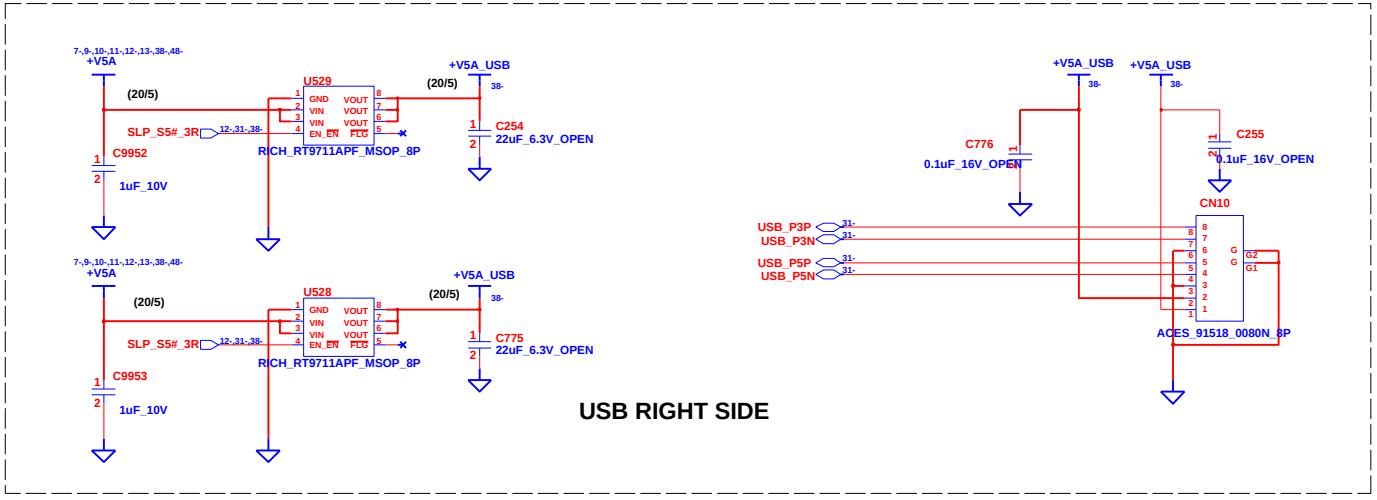

INVENTEC			
TITLE VV10AU2 USB CONN			
SIZE A3	CODE CS	DOC. NUMBER MTR	REV A01
CHANGE by	11-Mar-2010	SHEET 38 OF 57	

For EMI

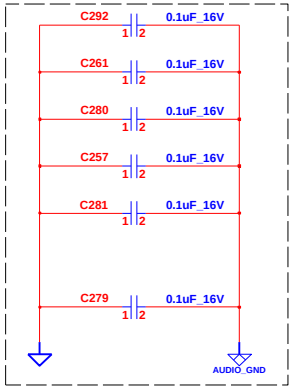

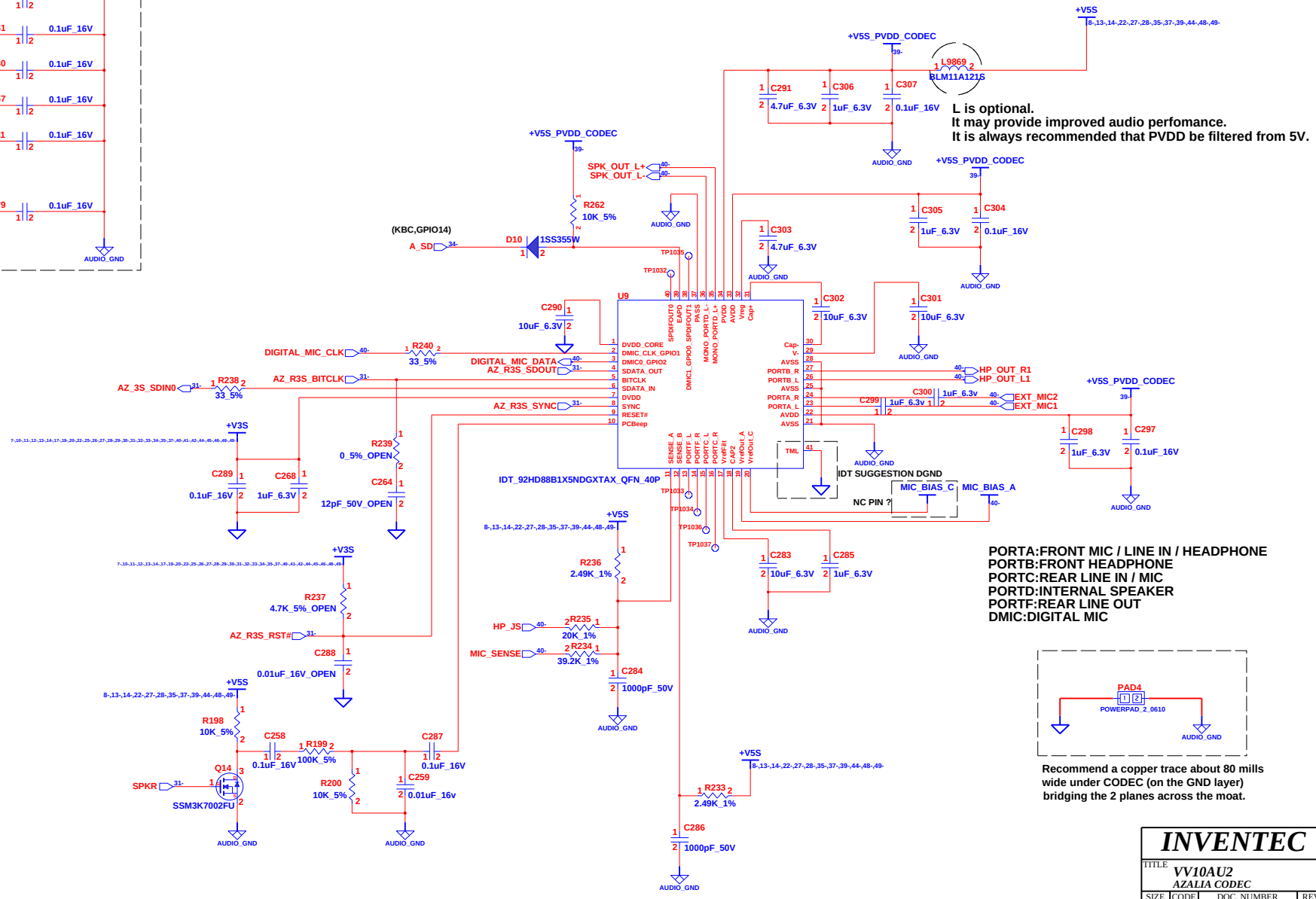

INVENTEC			
TITLE VV10AU2 AZALIA CODEC			
SIZE A3	CODE CS	DOC. NUMBER MTR	REV A01
CHANGE by	11-Mar-2010	SHEET 39 OF 57	

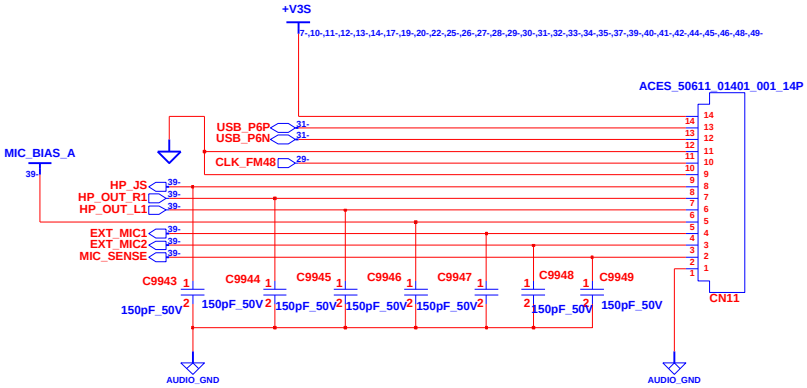

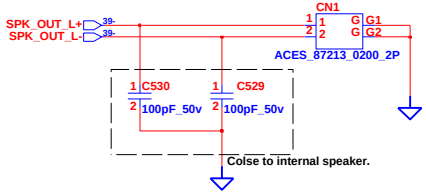

Internal Speaker

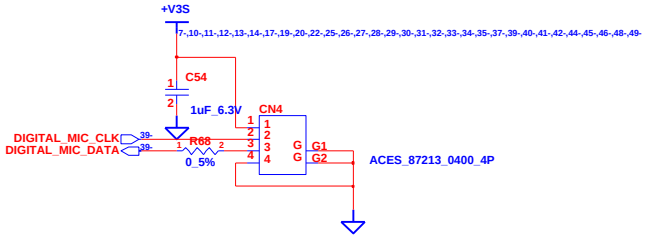

INT. MIC

INVENTEC			
TITLE VV10AU2 Earphone & MIC JACK			
SIZE A3	CODE CS	DOC. NUMBER MTR	REV A01
CHANGE by	11-Mar-2010	SHEET 40 OF 57	

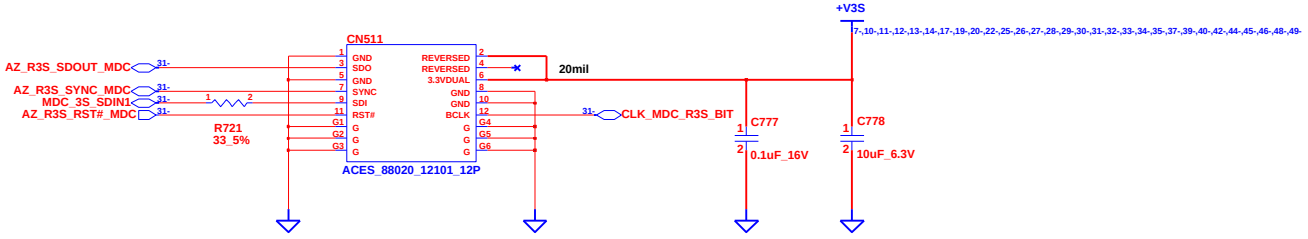

MDC CNTR

INVENTEC			
TITLE VV10AU2 MDC CNTR/E-SATA			
SIZE A3	CODE CS	DOC. NUMBER MTR	REV A01
CHANGE by	11-Mar-2010	SHEET 41 OF 57	

PIN43 : (High) Switching regulator is enable.
PIN43 : (Low) External power 1.2V is used.

U520
REA_RTL8153EH_GR_LQFP_48P

Pin	Name	Pin	Name
1	AVDD33	36	DVDD12
2	MDIP0	35	LED1_EESK
3	MDIN0	34	LED2_EEDI_AUX
4	NC	33	LED3_EEDO
5	MDIP1	32	EECS
6	MDIN1	31	GND
7	GND	30	DVDD12
8	NC	29	VDD33
9	NC	28	ISOLATEB
10	DVDD12	27	PERSTB
11	NC	26	LANWAKEB
12	NC	25	CLKREQB
13	DVDD12	24	NC
14	GND	23	NC
15	HSIP	22	EGND
16	HSIN	21	HSON
17	REFCLK_P	20	HSOP
18	REFCLK_N	19	VDDTX
48	VCTRL12A	47	GND
46	REST	45	VCTRL12D
44	NC	43	NC
42	CKTAL2	41	CKTAL1
40	NC	39	NC
38	LED0	37	VDD33

LAN_TRD0P, LAN_TRD0N, LAN_TRD1P, LAN_TRD1N, PCIE_C_TX0, PCIE_C_TX0#, CLK_PCIE_LAN, CLK_PCIE_LAN#, PCIE_C_RX0, PCIE_C_RX0#, PCIE_RXP_LAN, PCIE_RXN_LAN, LED_3S_LANACT#, LED_3S_LANLINK#, BUF_PLT_RST#, LAN_PCIE_WAKE#, NIC_LINK#, LED_3S_LANLINK#

X500 25MHz
C729 20pF_50v
C704 20pF_50v
C706 0.1uF_16V
R674 2.49K_1%
C186 0.1uF_16V
R724 3.6K_5%
R725 1K_5%
R730 10K_5%_OPEN
R173 0_5%
R732 0_5%_OPEN
C228 1uF_6.3V
C229 1uF_6.3V
C732 0.1uF_16V
C733 0.1uF_16V

+V3_LAN
+V3A
R9941 10K_5%
Q539 SSM3K7002F
LAN_PCIE_WAKE#
PCIE_WAKE#
PWR_SWIN#_3
D9859 1SS355W
PWR_SWIN#_3_SB
R9987 0_5%_OPEN
SLP_S3_5R
R9976 100K_5%
R9977 100K_5%
Q9863 SSM3K7002F
+V3S
R728 1K_5%
R704 15K_5%
Q538 PMV65XP
R723 220K_5%
C759 4.7uF_6.3V
R722 100_5%
Q537 SSM3K7002FU
U522 TC7SZ02F
SLP_S3#_3R
R726 10K_5%_OPEN
ADP_PRES
R727 220K_5%

C731 0.1uF_16v
C707 0.1uF_16v
C708 0.1uF_16v
C730 0.1uF_16v
C762 0.1uF_16v

(60mil)
C705 0.1uF_16v
C760 0.1uF_16v
C709 0.1uF_16v
C710 0.1uF_16v
C761 0.1uF_16v

INVENTEC
TITLE VV10AU2
10/100 LAN- CONTROLLER
SIZE A3 | CODE CS | DOC. NUMBER MTR | REV A01
SHEET 42 OF 57
CHANGE by | 11-Mar-2010

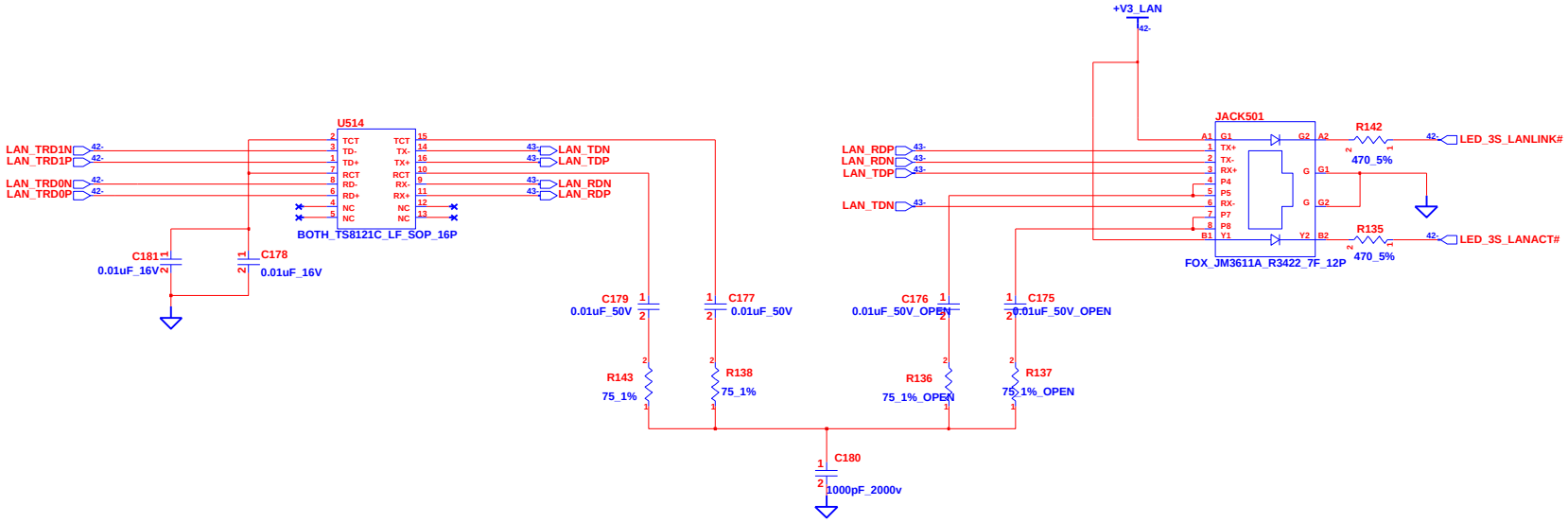

INVENTEC

TITLE
VV10AU2
NIC 10/100/1000-RJ45 CONN

SIZE	CODE	DOC. NUMBER	REV
A3	CS	MTR	A01

CHANGE by 11-Mar-2010

SHEET 43 OF 57

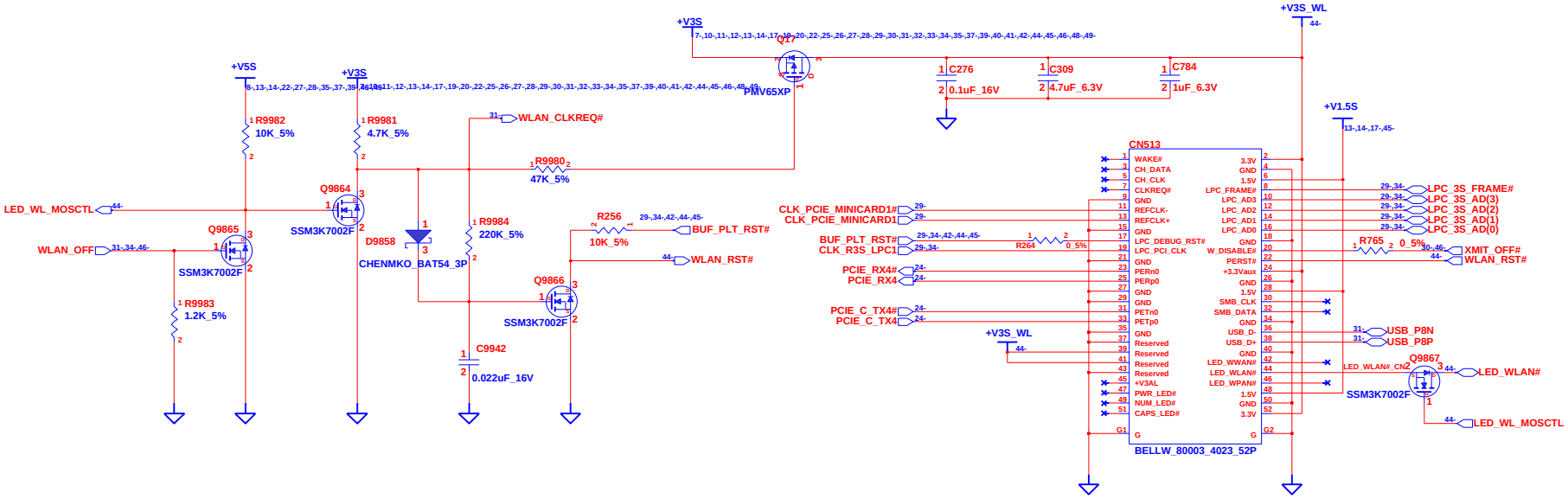

WLAN CNTR

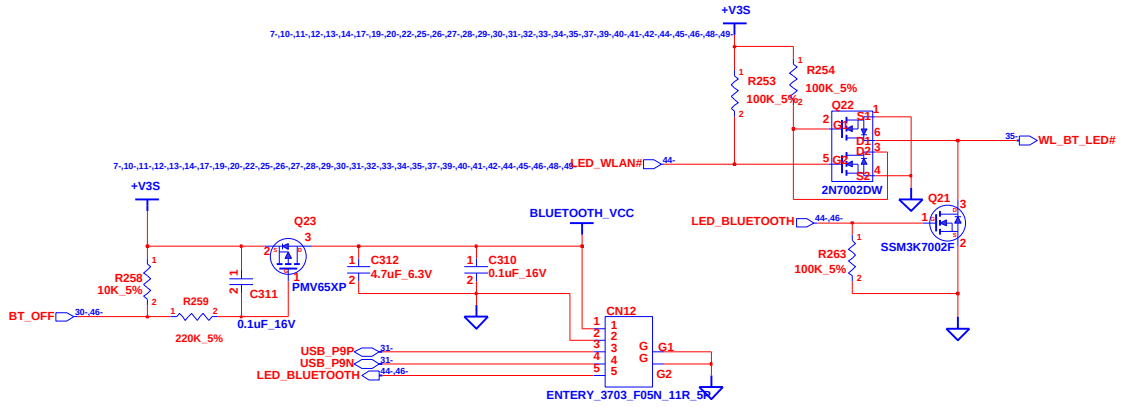

BLUETOOTH CNTR

INVENTEC			
TITLE VV10AU2 MINICARD & BT CONN			
SIZE A3	CODE CS	DOC. NUMBER MTR	REV A01
CHANGE by	11-Mar-2010	SHEET 44 OF 57	

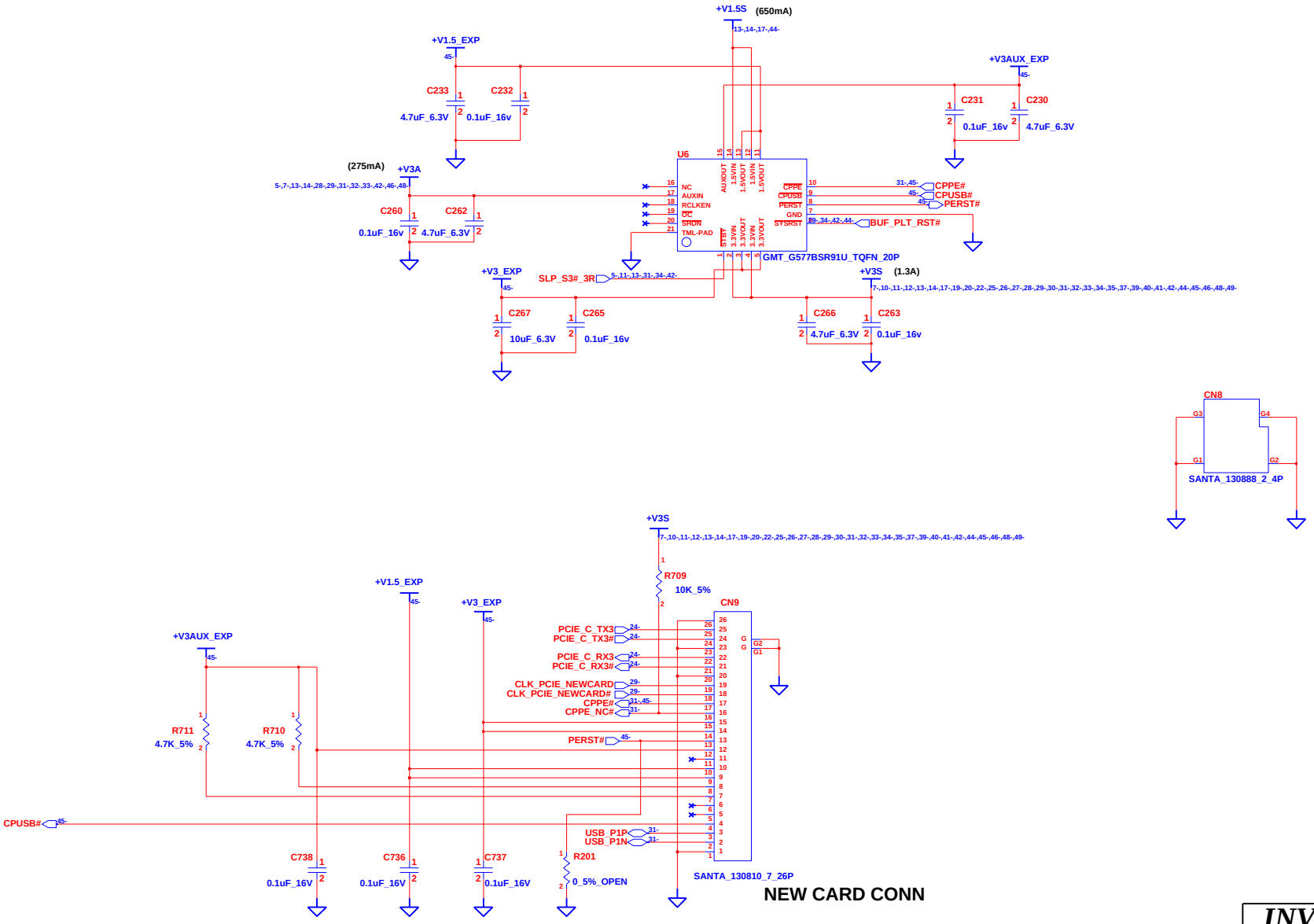

NEW CARD CONN

INVENTEC			
TITLE VV10AU2 NEW CARD			
SIZE A3	CODE CS	DOC. NUMBER MTR	REV A01
CHANGE by	11-Mar-2010	SHEET 45 OF 57	

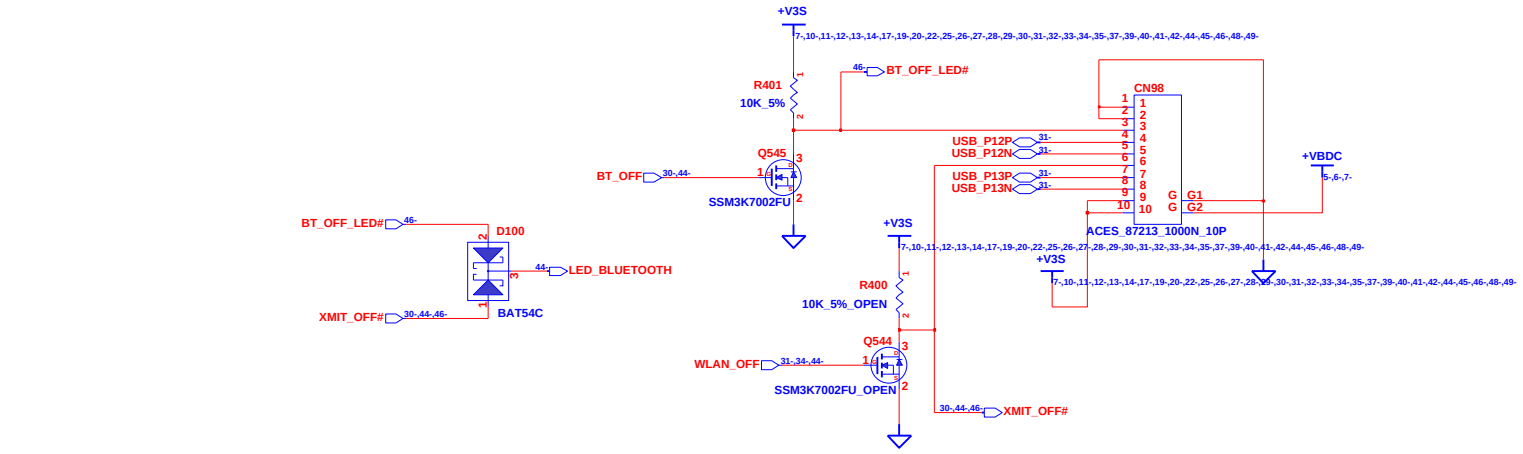

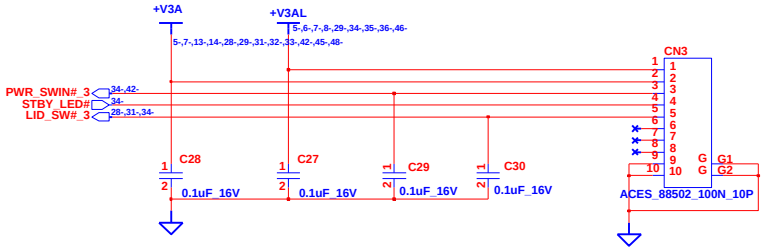

Swich Board & LED Board CONN

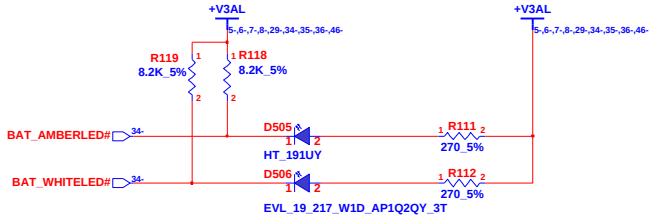

Battery charger LED

INVENTEC

TITLE *VV10AU2*
W/B & SW/B & LED/B CONN

SIZE	CODE	DOC. NUMBER	REV
A3	CS	*MTR*	*A01*

CHANGE by | *11-Mar-2010* | SHEET 46 OF 57

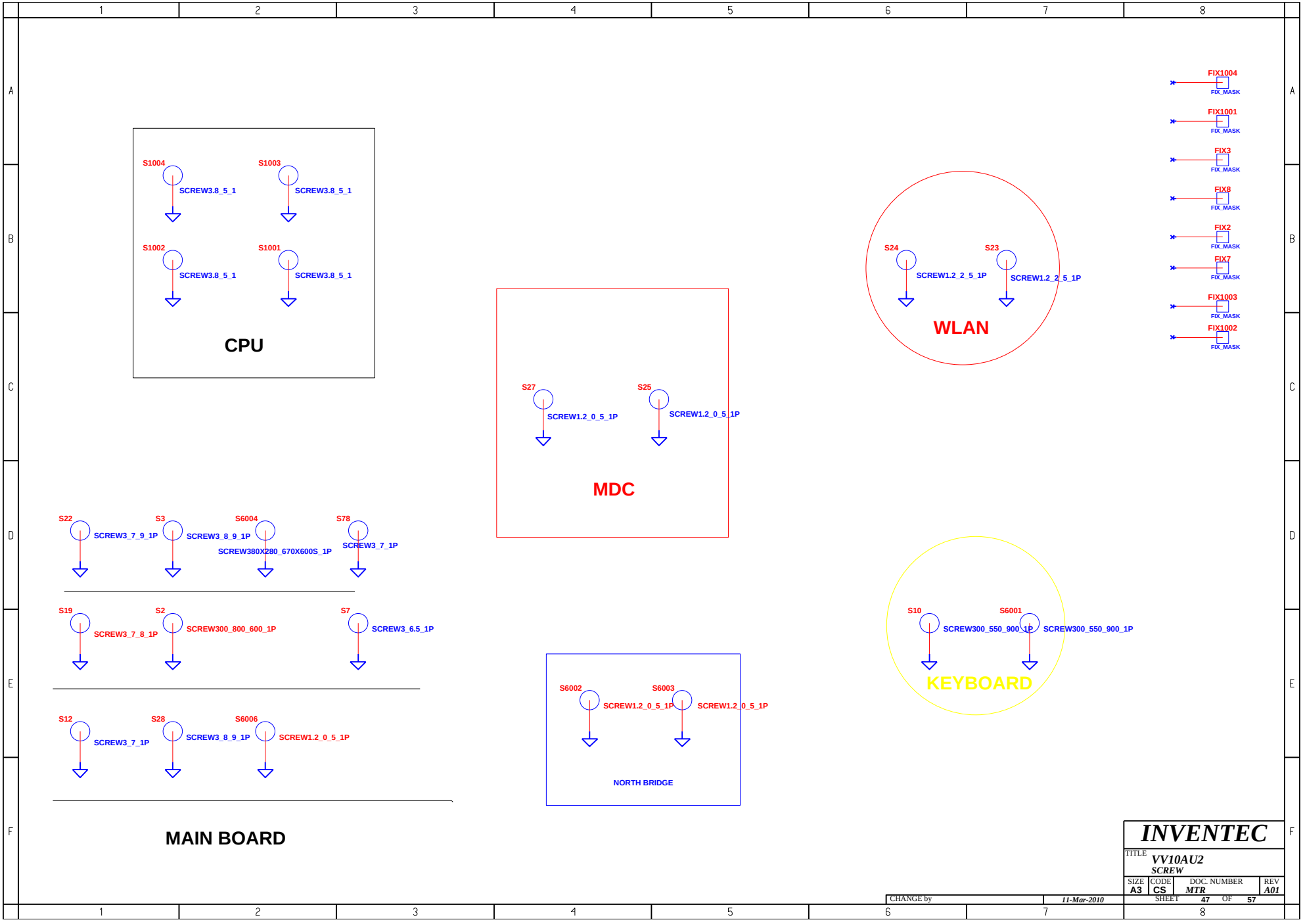
S1004
SCREW3.8_5_1
S1003
SCREW3.8_5_1
S1002
SCREW3.8_5_1
S1001
SCREW3.8_5_1
CPU
S27
SCREW1.2_0_5_1P
S25
SCREW1.2_0_5_1P
MDC
S24
SCREW1.2_2_5_1P
S23
SCREW1.2_2_5_1P
WLAN
FIX1004
FIX_MASK
FIX1001
FIX_MASK
FIX3
FIX_MASK
FIX8
FIX_MASK
FIX2
FIX_MASK
FIX7
FIX_MASK
FIX1003
FIX_MASK
FIX1002
FIX_MASK
S22
SCREW3_7_9_1P
S3
SCREW3_8_9_1P
S6004
SCREW380X280_670X600S_1P
S78
SCREW3_7_1P
S19
SCREW3_7_8_1P
S2
SCREW300_800_600_1P
S7
SCREW3_6.5_1P
S12
SCREW3_7_1P
S28
SCREW3_8_9_1P
S6006
SCREW1.2_0_5_1P
MAIN BOARD
S6002
SCREW1.2_0_5_1P
S6003
SCREW1.2_0_5_1P
NORTH BRIDGE
S10
SCREW300_550_900_1P
S6001
SCREW300_550_900_1P
KEYBOARD
INVENTEC
TITLE
VV10AU2
SCREW
SIZE A3
CODE CS
DOC. NUMBER MTR
REV A01
SHEET 47 OF 57
CHANGE by
11-Mar-2010

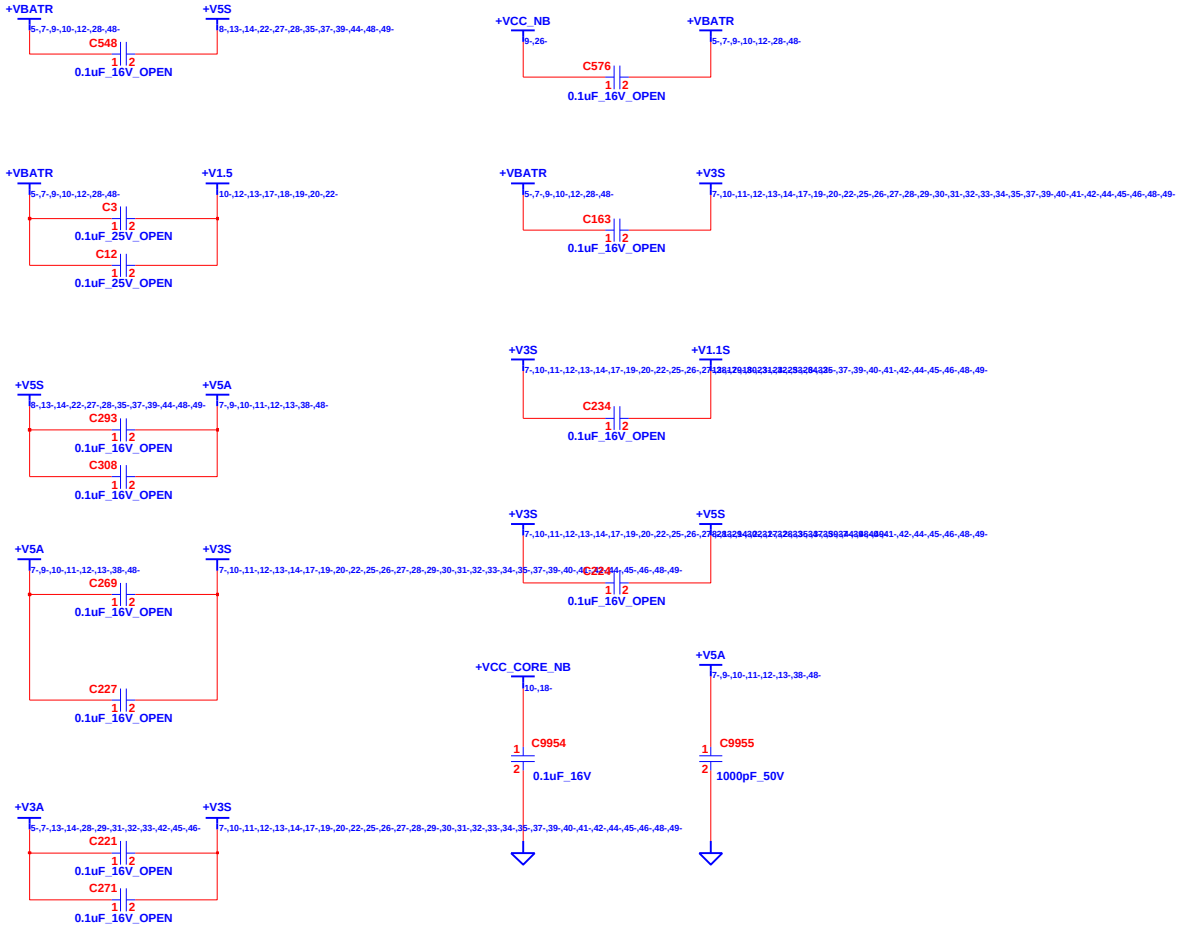

INVENTEC			
TITLE VV10AU2 Power Plan CAP			
SIZE A3	CODE CS	DOC. NUMBER MTR	REV A01
CHANGE by	11-Mar-2010	SHEET 48 OF 57	

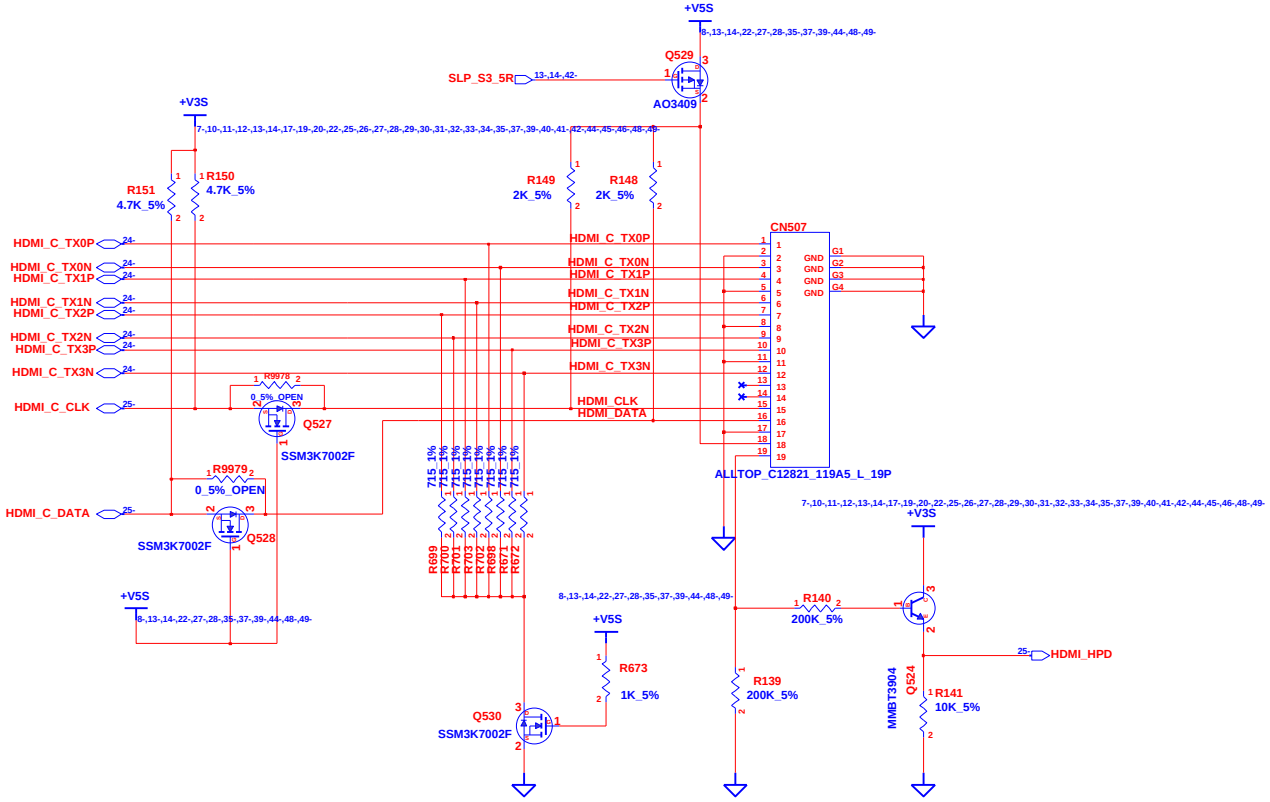

HDMI CONN

INVENTEC			
TITLE VV10AU2 HDMI			
SIZE A3	CODE CS	DOC. NUMBER MTR	REV A01
CHANGE by		11-Mar-2010	SHEET 49 OF 57

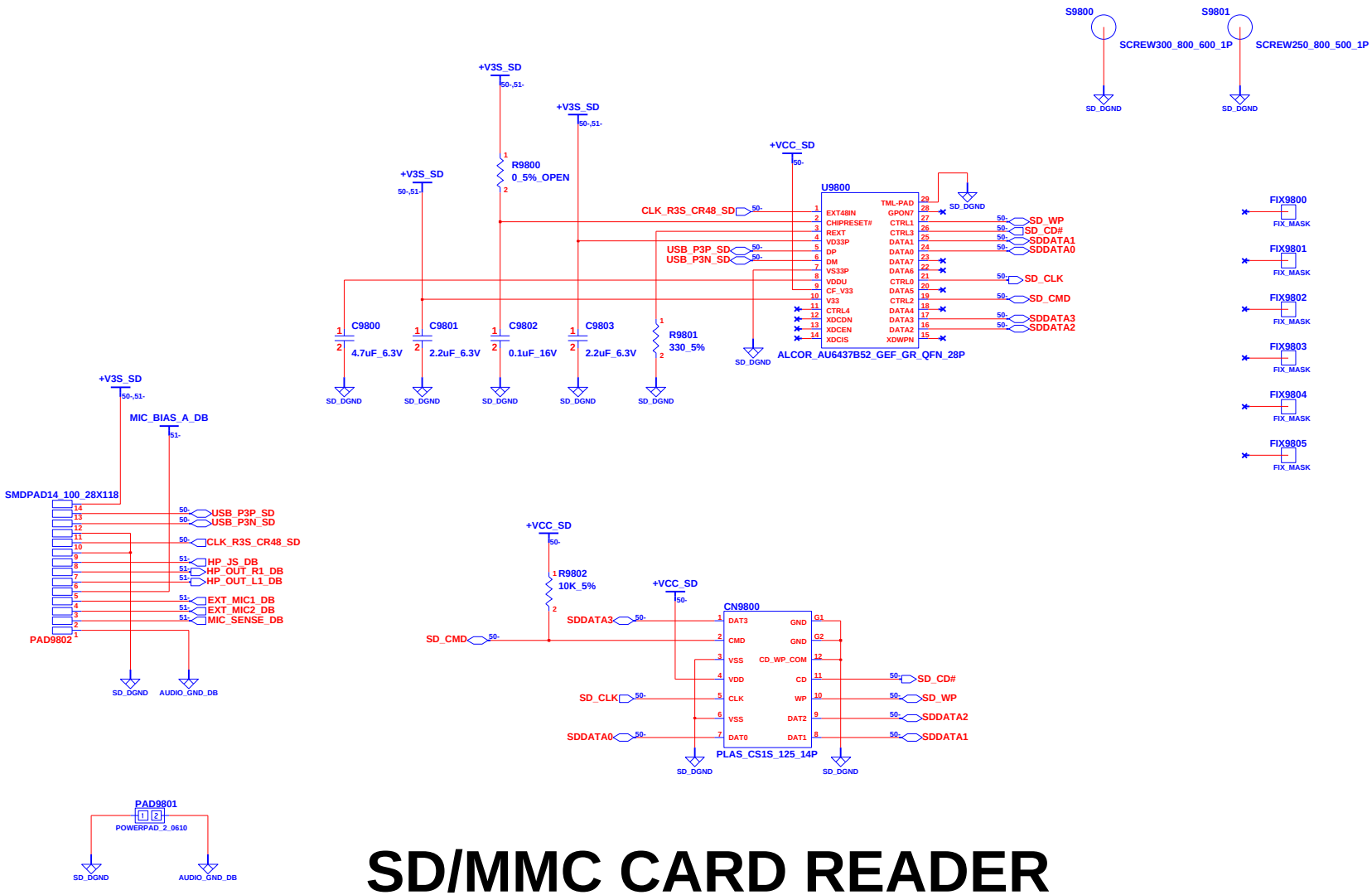

SD/MMC CARD READER

INVENTEC			
TITLE VV10AU2 SD/MMC Card Reader			
SIZE A3	CODE CS	DOC. NUMBER MTR	REV A01
CHANGE by	11-Mar-2010	SHEET 50 OF 57	

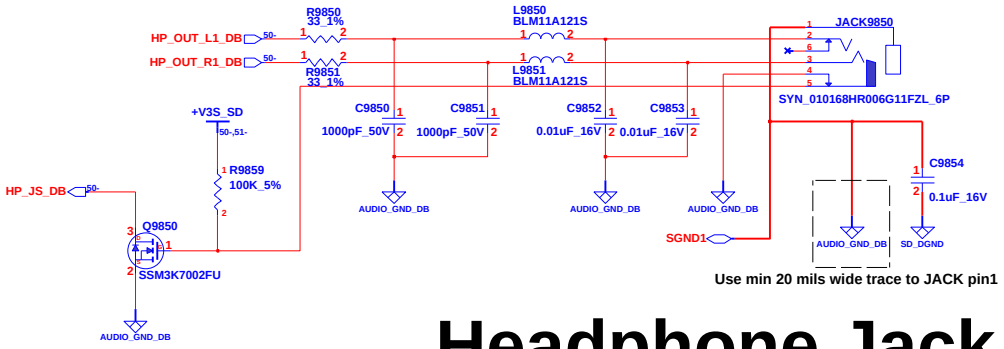

Headphone Jack

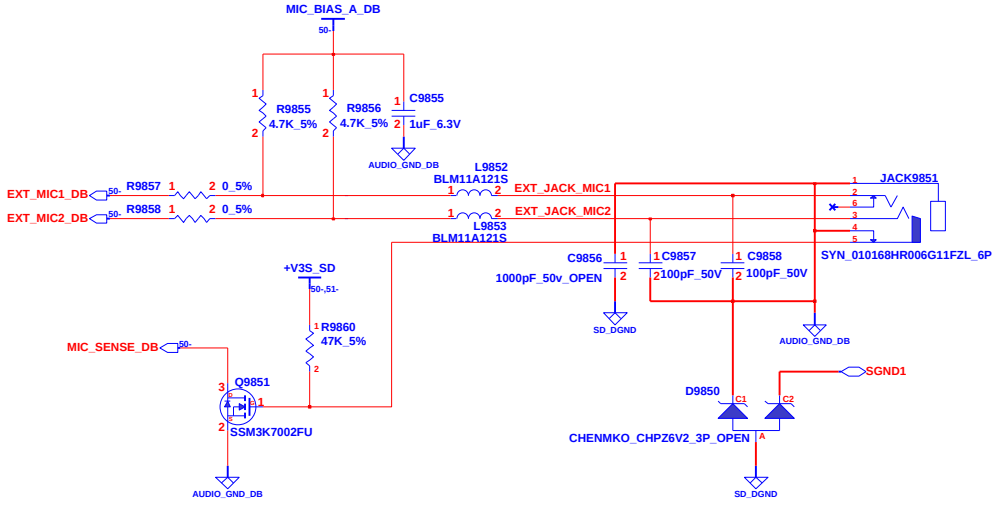

MIC Jack

INVENTEC			
TITLE VV10AU2 Headphone & MIC JACK			
SIZE A3	CODE CS	DOC. NUMBER MTR	REV A01
CHANGE by	11-Mar-2010	SHEET 51 OF 57	

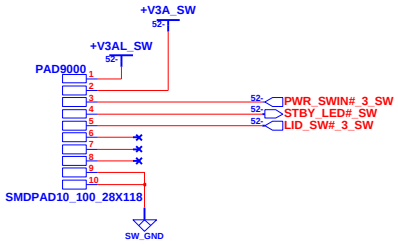

PWR SW B/B CONN

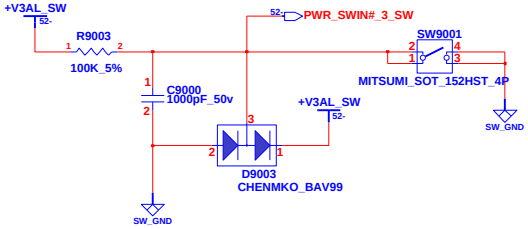

Power Button

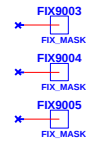

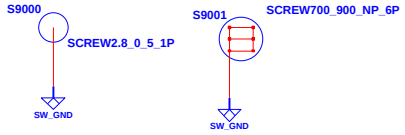

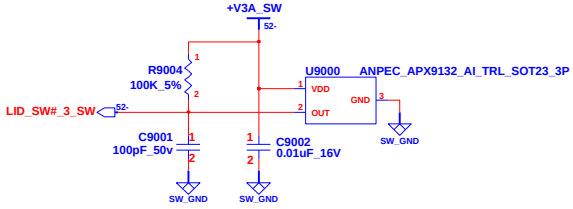

LID Switch

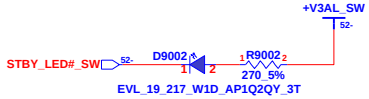

Power / Standby LED

Power Button & LID Switch Board

INVENTEC			
TITLE VV10AU2			
SIZE A3	CODE CS	DOC. NUMBER MTR	REV A01
CHANGE by	11-Mar-2010	SHEET 52 OF 57	

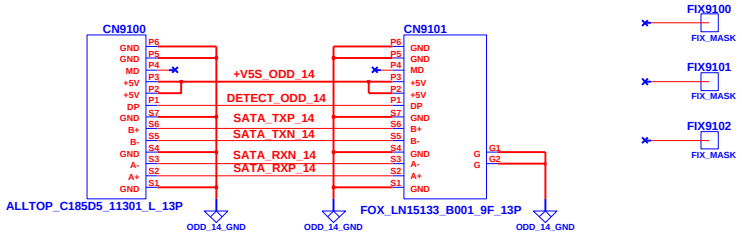

14’’ODD Extend Board

INVENTEC			
TITLE VV10AU2			
SIZE A3	CODE CS	DOC. NUMBER MTR	REV A01
CHANGE by	11-Mar-2010	SHEET 53 OF 57	

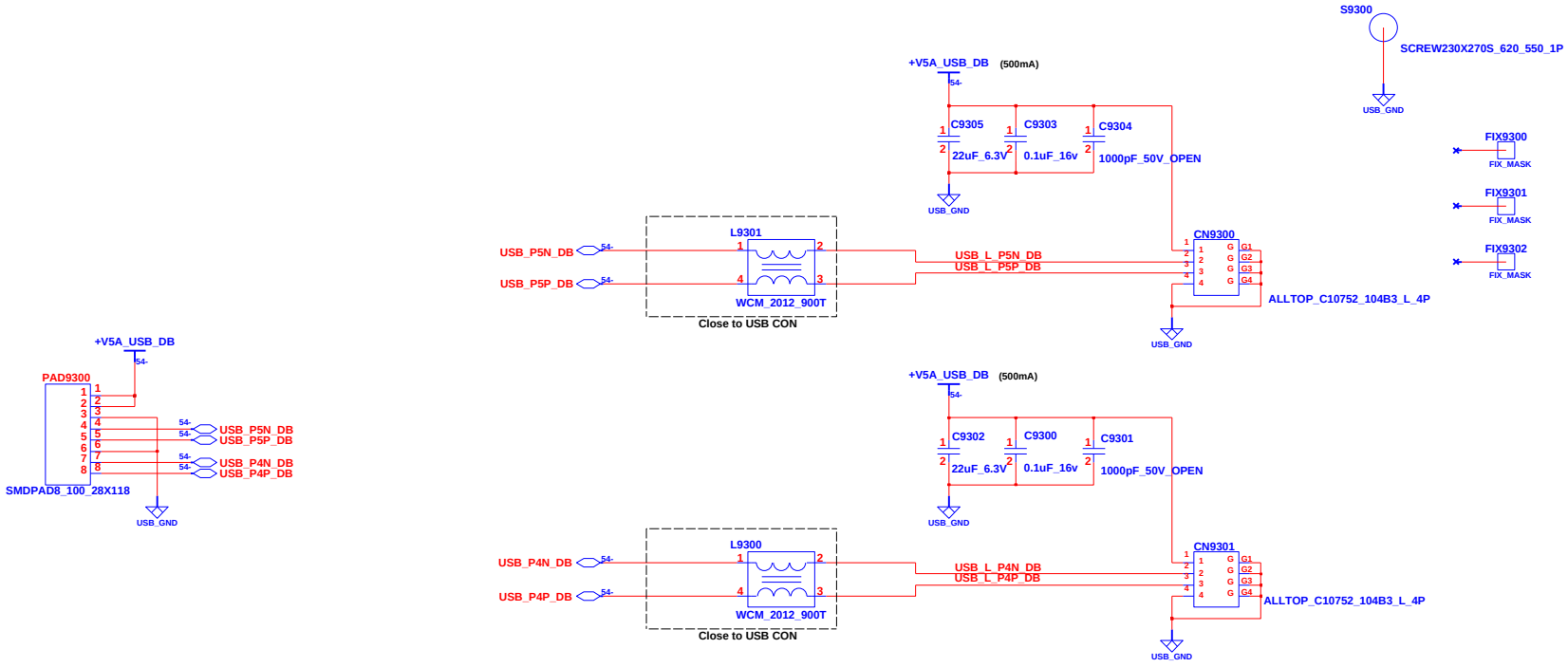

USB Right Side Board

INVENTEC			
TITLE VV10AU2			
SIZE A3	CODE CS	DOC. NUMBER MTR	REV A01
CHANGE by	11-Mar-2010	SHEET 54 OF 57	

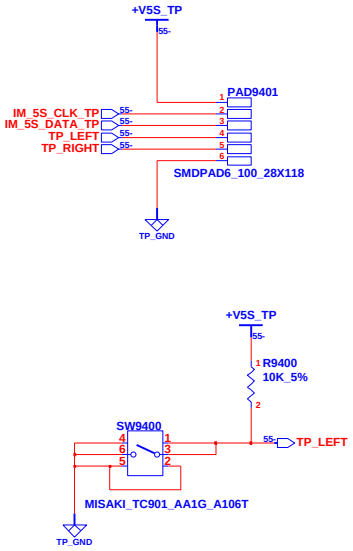

LEFT BUTTON

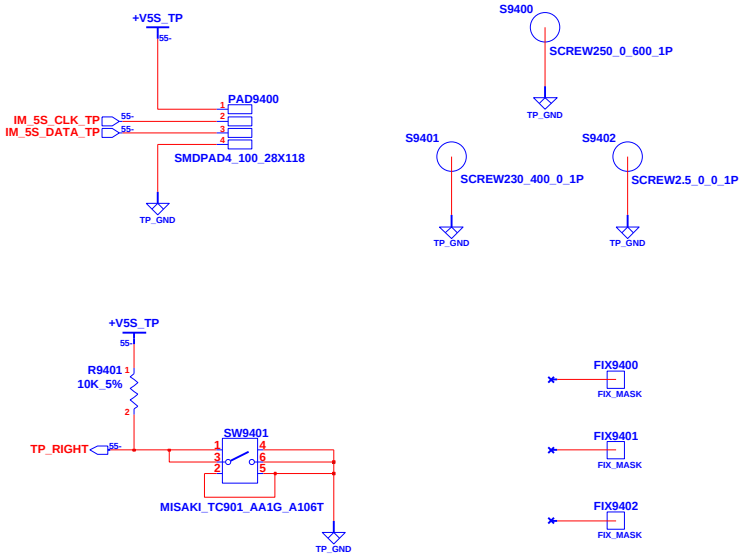

RIGHT BUTTON

PICK Button Board

INVENTEC			
TITLE VV10AU2			
SIZE A3	CODE CS	DOC. NUMBER MTR	REV A01
CHANGE by	11-Mar-2010	SHEET 55 OF 57	

BLANK

15’’ODD Extend Board

INVENTEC					
TITLE VV10AU2					
SIZE A3	CODE CS	DOC. NUMBER MTR			REV A01
CHANGE by		11-Mar-2010	SHEET 56 OF 57		

BLANK

15’’ SATA HDD Extend Board

INVENTEC			
TITLE VV10AU2			
SIZE A3	CODE CS	DOC. NUMBER MTR	REV A01
CHANGE by	11-Mar-2010	SHEET 57 OF 57	